LAX MAY 2014

PROJECT ID: 1674-00-70

WITH:

COUNTY: SAUK

ORDER OF SHEETS

Section No.	1	Title
Section No.	2	Typical Sections and Details (Including Erosion Control Plan)
Section No.	3	Estimate of Quantities
Section No.	3	Miscellaneous Quantities
Section No.	4	Right of Way Plat
Section No.	5	Plan and Profile
Section No.	6	Standard Detail Drawings
Section No.	9	Computer Earthwork Data
Section No.	9	Cross Sections

TOTAL SHEETS = 278

STATE PROJECT	FEDERAL PROJECT	
	PROJECT	CONTRACT
1674-00-70	WISC 2014178	1

STATE OF WISCONSIN
DEPARTMENT OF TRANSPORTATION

PLAN OF PROPOSED IMPROVEMENT

LAKE DELTON - SAUK CITY ROAD

FERN DELL ROAD - W FRONTAGE ROAD

US 12

SAUK COUNTY

STATE PROJECT NUMBER

1674-00-70

DESIGN DESIGNATION

A.A.D.T. (2012)	=	1,060 (ISHNALA ROAD)
A.A.D.T. (2032)	=	1,360 (ISHNALA ROAD)
D.H.V.	=	136
D.D.	=	50/50
T.	=	3.0%
DESIGN SPEED	=	40 MPH
ESALS	=	87,600

END CONSTRUCTION
STA. 102+61.89 'ISH'

BEGIN CONSTRUCTION
STA. 99+31.73 'GA'
X = 635,824.71
Y = 270,449.80

BEGIN CONSTRUCTION
STA. 45+62.25 'ISH'
X = 635,824.71
Y = 270,449.80

BEGIN PROJECT
STA. 42+63.96 'FE'
X = 635,526.44
Y = 270,447.26

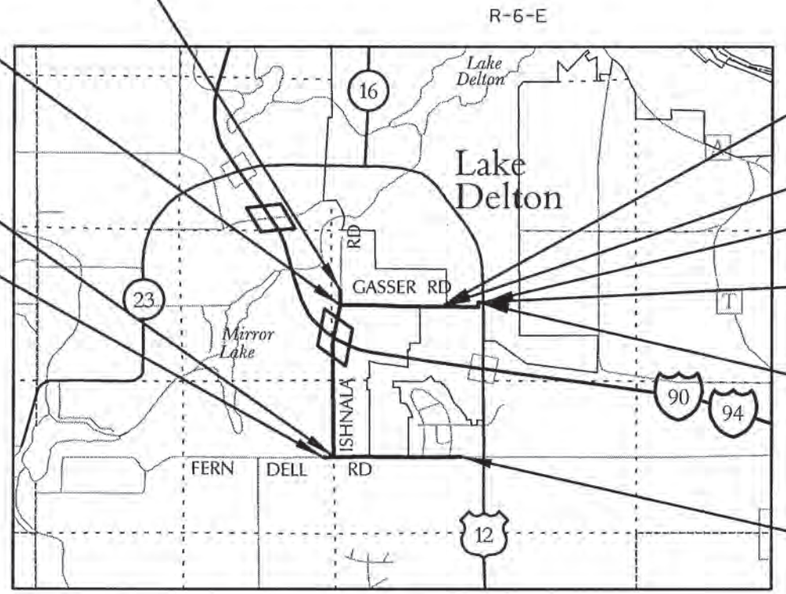

BEGIN CONSTRUCTION
STA. 131+90.56 'SU'
X = 639,472.46
Y = 275,682.44

END CONSTRUCTION
STA. 131+90.56 'GA'

END PROJECT
STA. 153+69.59 'ZAP'

BEGIN CONSTRUCTION
STA. 143+93.90 'ZAP'
X = 640,676.19
Y = 275,723.85

END CONSTRUCTION
STA. 143+93.90 'SU'

END CONSTRUCTION
STA. 81+00.00 'FE'

CONVENTIONAL SYMBOLS

PLAN
- CORPORATE LIMITS
- PROPERTY LINE
- LOT LINE
- LIMITED HIGHWAY EASEMENT
- EXISTING RIGHT OF WAY
- PROPOSED OR NEW R/W LINE
- SLOPE INTERCEPT
- REFERENCE LINE
- EXISTING CULVERT
- PROPOSED CULVERT (Box or Pipe)
- COMBUSTIBLE FLUIDS (CAUTION)
- MARSH AREA
- WOODED OR SHRUB AREA

PROFILE
- GRADE LINE
- ORIGINAL GROUND
- MARSH OR ROCK PROFILE (To be noted as such) (ROCK)
- SPECIAL DITCH (LABEL)
- GRADE ELEVATION (95.36)
- CULVERT (Profile View)

UTILITIES
- ELECTRIC (E)
- FIBER OPTIC (FO)
- GAS (G)
- SANITARY SEWER (SAN)
- STORM SEWER (SS)
- TELEPHONE (T)
- WATER (W)
- UTILITY PEDESTAL
- POWER POLE
- TELEPHONE POLE

N

LAYOUT
SCALE 0 0.5 MI.

TOTAL NET LENGTH OF CENTERLINE = 2.836 MI.

"Coordinates on this plan are referenced to the Wisconsin County Coordinate System (WCCS) NAD 83(91), Sauk County."

ORIGINAL PLANS PREPARED BY:

STRAND ASSOCIATES®
910 West Wingra Drive
Madison, WI 53715
608 251-4843
608 251-8655 FAX
www.strand.com

WISCONSIN PROFESSIONAL ENGINEER
JARED D. ENGELKE
E-42498
MADISON
WI
1.30.14

STATE OF WISCONSIN
DEPARTMENT OF TRANSPORTATION

PREPARED BY

Surveyor	Strand Associates, Inc
Designer	Strand Associates, Inc
Project Manager	WISDOT
Regional Examiner	
Regional Supervisor	
C.O. Examiner	

APPROVED FOR THE DEPARTMENT

DATE: 1-14-2014 Orson A. Winger (Signature)

E

GENERAL NOTES

MISCELLANEOUS

DETAILS OF CONSTRUCTION NOT SHOWN SHALL BE IN ACCORDANCE WITH THE PERTINENT REQUIREMENTS OF THE STANDARD SPECIFICATIONS.

THE LOCATIONS OF EXISTING AND PROPOSED UTILITY INSTALLATIONS AS SHOWN ON THE PLANS ARE APPROXIMATE. THERE MAY BE OTHER UTILITY INSTALLATIONS WITHIN THE PROJECT THAT ARE NOT SHOWN. THE CONTRACTOR SHALL NOTIFY DIGGERS HOTLINE AND AFFECTED UTILITIES PRIOR TO THE START OF WORK. ANY MUNICIPAL UTILITY WHICH IS NOT A MEMBER OF THE DIGGERS HOTLINE MUST BE CONTACTED SEPARATELY.

RADIUS DIMENSIONS ON CURB AND GUTTER ARE TO THE FLAG OF CURB UNLESS OTHERWISE NOTED.

ALL SIGN LOCATIONS SHALL BE REVIEWED BY THE ENGINEER PRIOR TO INSTALLATION.

ASPHALT REMOVAL OUTSIDE THE PULVERIZE AND RELAY LIMITS BUT WITHIN THE EXCAVATION LIMITS WILL BE CONSIDERED INCIDENTAL TO EXCAVATION COMMON.

PRIOR TO PLACEMENT OF MGS GUARDRAIL, THE SHOULDERS SHALL BE IN PLACE, SHAPED, COMPACTED AND FINISHED.

CROSS SECTIONS INCLUDE THE THICKNESS OF SALVAGED TOPSOIL WHERE REQUIRED.

THE BID ITEM WATER SHALL BE USED FOR DUST CONTROL AS DIRECTED BY THE ENGINEER.

WHEN THE QUANTITY OF ITEMS OF BASE AGGREGATE OR HMA PAVEMENT IS MEASURED FOR PAYMENT BY THE TON, THE THICKNESS OF THE LAYER SHOWN ON THE PLANS IS APPROXIMATE, AND THE ACTUAL THICKNESS WILL DEPEND ON THE DISTRIBUTION OF THE MATERIAL AS DIRECTED BY THE ENGINEER.

THE EXACT LOCATION AND WIDTH OF DRIVEWAYS WILL BE DETERMINED IN THE FIELD BY THE ENGINEER.

STATIONING, DISTANCES, AND OFFSETS FOR PROPOSED SIGNS SHOWN ON THE PLANS ARE APPROXIMATE AND THE LOCATIONS OF SIGNS ARE TO BE COORDINATED IN THE FIELD WITH THE ENGINEER.

CONSTRUCT CONCRETE SIDEWALK WITH A MAXIMUM CROSS SLOPE OF 2%. CONCRETE SIDEWALK WITH A CROSS SLOPE EXCEEDING 2% WILL BE REMOVED AND REPLACED, AS DIRECTED BY THE ENGINEER, AT NO COST TO THE DEPARTMENT.

REMOVALS

NO TREES OR SHRUBS ARE TO BE REMOVED UNLESS INDICATED FOR REMOVAL BY THE ENGINEER.

MISCELLANEOUS REMOVAL ITEMS REQUIRING RESTORATION OF CONCRETE OR ASPHALTIC CONCRETE DRIVEWAYS, SIDEWALKS OR SIDE STREETS SHALL BE REMOVED TO AN EXISTING JOINT OR SAWED AS DETERMINED BY THE ENGINEER.

CONFLICTING SIGNS SHALL BE COVERED OR REMOVED.

GRADING/EROSION CONTROL

TOPSOIL, SEEDING, MULCHING, AND FERTILIZER HAVE BEEN COMPUTED BY A DIRECT MEASUREMENT ON THE CROSS SECTIONS PLUS FIVE (5) FEET BEYOND THE TOE OF SLOPE.

FILL AS SHOWN ON THE PLANS PERTAINS TO EMBANKMENT CONSTRUCTED FROM BORROW. THE FACTOR USED FOR EXPANDING THE FILLS TO COMPUTE THE VOLUME OF MATERIAL REQUIRED IS 1.30. ACTUAL EXPANSION FACTOR MAY VARY.

SILT FENCE SHALL BE PLACED AS SHOWN ON THE PLANS OR AS DIRECTED BY THE ENGINEER AND IN PLACE PRIOR TO CONSTRUCTION.

THE EROSION CONTROL FEATURES AS SHOWN ON THE PLANS ARE AT SUGGESTED LOCATIONS.

EXACT LOCATIONS WILL BE DETERMINED BY THE CONTRACTORS EROSION CONTROL IMPLEMENTATION PLAN (ECIP) AND APPROVED BY THE ENGINEER IN CONSULTATION WITH THE WISCONSIN DEPARTMENT OF NATURAL RESOURCES. EROSION CONTROL DEVICES SHALL BE PLACED IN SEQUENCE WITH CONSTRUCTION OPERATIONS. ALL EROSION CONTROL MEASURES SHALL BE MAINTAINED UNTIL SUCH TIME AS THE ENGINEER DETERMINES THE MEASURE IS NO LONGER NECESSARY.

EXCAVATION BELOW SUBGRADE (EBS) IS NOT USED TO BALANCE YARDAGE, BUT IS MEASURED AND PAID FOR AS EXCAVATION COMMON. THE LOCATION FOR EBS SHOWN ON THE PLANS IS APPROXIMATE. ACTUAL LOCATIONS WILL BE DETERMINED BY THE ENGINEER.

DISTURBED AREAS WITHIN THE RIGHT OF WAY SHALL BE RESTORED AS DIRECTED BY THE ENGINEER.

EROSION CONTROL DETAILS ARE SHOWN ON SEPARATE DETAIL SHEETS.

CONTRACTOR SHALL USE CARE WHEN WORKING NEAR OR AROUND EXISTING FENCING THAT IS NOT TO BE REMOVED. FINE GRADING AND HAND WORK MAY BE REQ'D NEAR AND AROUND EXISTING FENCING.

EXCAVATION BELOW SUBGRADE (EBS) IS ESTIMATED AND MAY VARY AS DIRECTED BY THE ENGINEER.

STORM DRAINAGE

CROSS DRAIN PIPE INVERT ELEVATIONS AS SHOWN ON THE CROSS SECTIONS MAY BE ADJUSTED TO FIT EXISTING FIELD CONDITIONS.

ALL CONCRETE CULVERT PIPES SHALL HAVE JOINT TIES INSTALLED ON THE LAST THREE PIPE JOINTS AND THE ENDWALL JOINT AT BOTH THE INLET AND DISCHARGE ENDS.

EXISTING PIPE CULVERT SIZES AND CONCRETE BOX CULVERT SIZES SHOWN ARE APPROXIMATE AND THE CONTRACTOR WILL BASE THE BID ON THE ACTUAL FIELD CONDITIONS.

ALL NECESSARY TEMPORARY SHORING FOR STORM SEWER PIPE, CULVERT PIPE, AND STORM SEWER STRUCTURES SHALL BE INCLUDED IN THE COST OF THE PIPE OR STRUCTURE AND WILL NOT BE PAID FOR SEPARATELY.

PAVING

THE HMA PAVEMENT WEIGHT CALCULATIONS ARE BASED ON 110 LB/SY/IN.

A SAWED JOINT SHALL BE REQUIRED WHERE NEW PAVEMENT MEETS AN EXISTING PAVED SURFACE.

4.75-INCH HMA PAVEMENT SHALL BE CONSTRUCTED WITH A 1.75-INCH UPPER LAYER AND 3-INCH LOWER LAYER. 4-INCH HMA PAVEMENT SHALL BE CONSTRUCTED WITH A 1.75-INCH UPPER LAYER AND 2.25-INCH LOWER LAYER.

THE CONTRACTOR'S PAVING OPERATIONS SHALL BE CONSISTENT WITH THE PLAN TYPICAL SECTIONS AND CONSTRUCTED TO PREVENT HMA LONGITUDINAL JOINTS FROM BEING LOCATED WITHIN A DRIVING, TURNING, PASSING, OR PARKING LANE.

THE LOW SIDE SHOULDER SLOPE ON SUPERELEVATION SECTIONS EQUALS SUPERELEVATION RATE WHEN SUPERELEVATION IS GREATER THAN 4%. SEE DETAILS FOR TRANSITION LENGTHS.

THE HIGH SIDE SHOULDER SLOPE ON SUPER ELEVATED SECTIONS GREATER THAN 2% EQUALS SUPERELEVATION RATE. SEE DETAILS FOR TRANSITION LENGTHS.

UTILITIES

UTILITY OR MUNICIPALITY	ADDRESS	CONTACT	UTILITY TYPE
*CENTURYLINK	333 N FRONT STREET P.O. BOX 4800 LACROSSE, WI 54602	MR. STEVE BLADO 608-796-5525	COMMUNICATION
*CHARTER COMMUNICATIONS	2701 DANIELS STREET MADISON, WI 53718	MR. BRANDON STORM 608-274-3822	COMMUNICATION
*FRONTIER COMMUNICATIONS	118 DIVISION STREET PLYMOUTH, WI 53073	MR. ROBERT CHURCH 608-837-1881	COMMUNICATION
SAUK COUNTY EMERGENCY MGT. BLDGS. & SAFETY	510 BROADWAY STREET BARABOO, WI 53913	MR. TIMOTHY STIEVE 608-963-2291	COMMUNICATION
*ALLIANT ENERGY CORPORATION	SUITE 1000 4902 BILTMORE LANE MADISON, WI 53718	MR. JASON HOGAN 608-458-4871	ELECTRIC
*ALLIANT ENERGY CORPORATION	SUITE 1000 4902 BILTMORE LANE MADISON, WI 53718	MR. JASON HOGAN 608-458-4871	GAS
AMERICAN TRANSMISSION COMPANY	801 O'KEEFE ROAD P.O. BOX 6113 DE PERE, WI 54115-6113	MR. MIKE OLSEN 920-338-6582	TRANSMISSION
*HO-CHUNK NATION PUBLIC UTILITIES	P.O. BOX 636 BLACK RIVER FALLS, WI 54615	MS. CAROL ROLLINS 715-284-9851 (OFFICE) 715-797-0207 (MOBILE)	WATER & SEWER
*VILLAGE OF LAKE DELTON	MSA PROFESSIONAL SERVICES 1230 SOUTH BOULEVARD BARABOO, WI 53913	MR. JOHN LANGHANS (608) 356-2771 (OFFICE) (608) 963-2027 (MOBILE)	WATER & SEWER
DAIRYLAND CABLE SYSTEMS, INC.	1450 VETERANS DRIVE RICHLAND CENTER, WI 53581	MR. LONNIE FREEMAN 800 677-6383 (OFFICE) (608) 604-9002 (MOBILE)	CABLE

*MEMBER OF DIGGERS HOTLINE

DIGGERS HOTLINE
Dial 811 or (800)242-8511
www.DiggersHotline.com

ABBREVIATIONS

ABUT.	ABUTMENT
A.D.T.	AVERAGE DAILY TRAFFIC
AEW	APRON END WALL
BAD	BASE AGGREGATE DENSE
B.F.	BACK FACE
B.M.	BENCH MARK
C.E.	COMMERCIAL ENTRANCE
CPCP	CULVERT PIPE CORRUGATED POLYETHYLENE
CPCS	CULVERT PIPE CORRUGATED STEEL
CPCSHE	CULVERT PIPE CORRUGATED STEEL HORIZONTAL ELLIPTICAL
CPRC	CULVERT PIPE REINFORCED CONCRETE
CPRCHE	CULVERT PIPE REINFORCED CONCRETE HORIZONTAL ELLIPTICAL
CTR.	CENTER
C.L.	CENTERLINE
D.	LANE DISTRIBUTION
D.H.V.	DESIGN HOURLY VOLUME
DIA.	DIAMETER
DIM.	DIMENSION
EL. OR ELEV.	ELEVATION
EXC.	EXCAVATION
F.E.	FIELD ENTRANCE
F.F.	FRONT FACE
IEP	INSIDE EDGE OF PAVEMENT
MAX.	MAXIMUM
MIN.	MINIMUM
NORM.	NORMAL
O.H.	OVERHEAD POWER LINE
PACS	PIPE ARCH CORRUGATED STEEL
P.E.	PRIVATE ENTRANCE
P.O.L.	POINT ON LINE
REQ'D.	REQUIRED
RDWY.	ROADWAY
R.H.F.	RIGHT HAND FORWARD
S.E.	SUPERELEVATION
SPA.	SPACE
SSRCP	STORM SEWER REINFORCED CONCRETE PIPE
STA.	STATION
SYM.	SYMMETRICAL
T.	PERCENT OF TRUCKS
T.L.E.	TEMPORARY LIMITED EASEMENT
TYP.	TYPICAL
V.	DESIGN SPEED

REGION CONTACT

JEREMY KRACHEY
3550 MORMON COULEE ROAD.
LACROSSE, WI 54601
PH: (608) 789-5702
JEREMY.KRACHEY@DOT.WI.GOV

DESIGN CONSULTANT

JARED ENGELKE
STRAND ASSOCIATES
910 W. WINGRA DRIVE
MADISON, WI 53715
PH: (608) 251-4843
JARED.ENGELKE@STRAND.COM

ENVIRONMENTAL COORDINATOR

CATHY BLESER
WISCONSIN DEPARTMENT OF NATURAL RESOURCES
3911 FISH HATCHERY ROAD
FITCHBURG, WI 53711
PH: (608) 275-3308
CATHRINE.BLESER@WISCONSIN.GOV

PROJECT NO: 1674-00-70	HWY: US 12	COUNTY: SAUK	GENERAL NOTES	SHEET 2	E

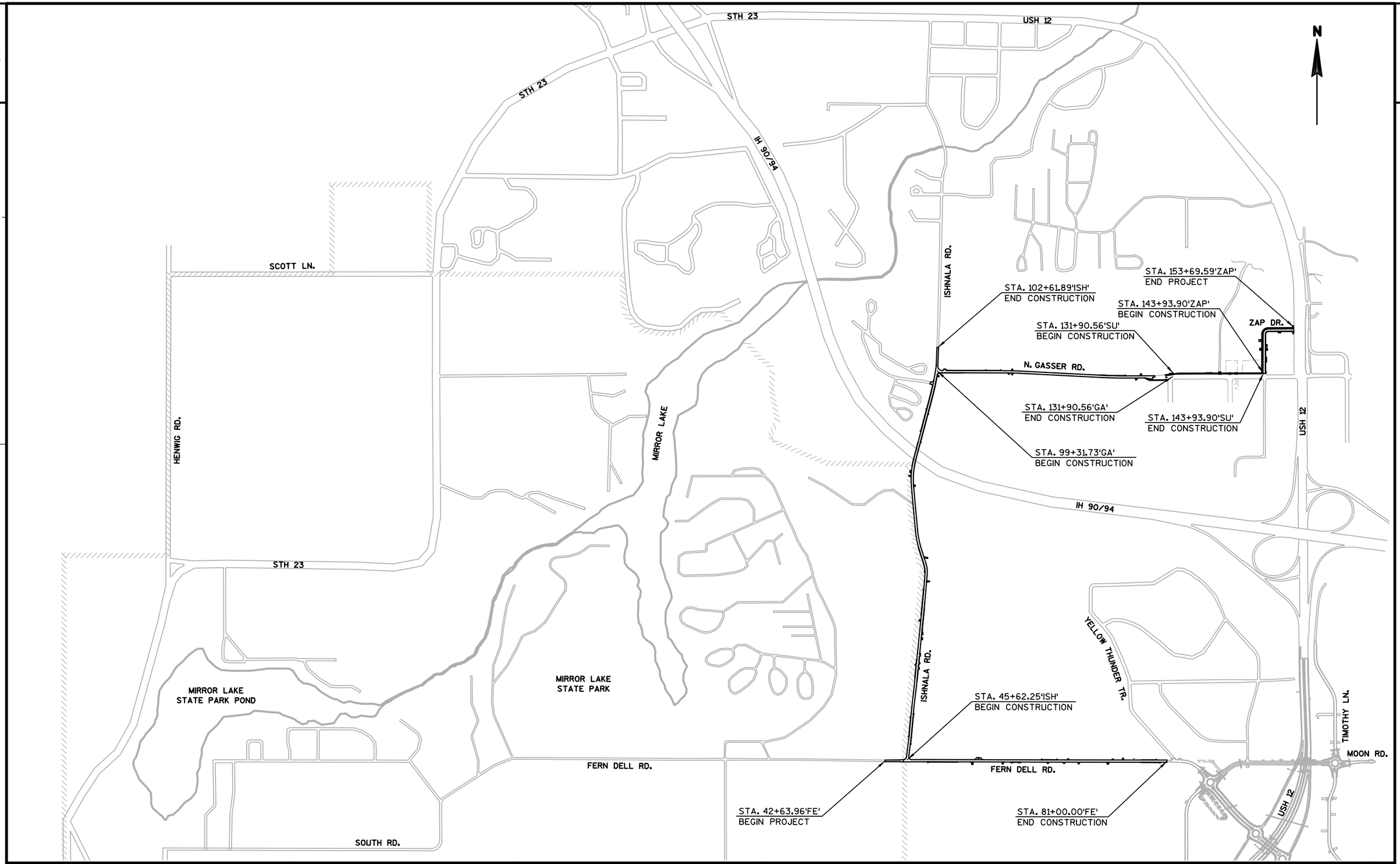

PROJECT NO: 1674-00-70	HWY: US 12	COUNTY: SAUK	PROJECT OVERVIEW	SHEET	E

FILE NAME : S:\MAD\1000--1099\1089\150\Micros\Design\Ishnala Bikepath\Plan\020201_po.dgn PLOT DATE : 11/26/2013 PLOT BY : _username_ PLOT NAME : PLOT SCALE : $$.....plotscale.....$$ WISDOT/CADDS SHEET 42

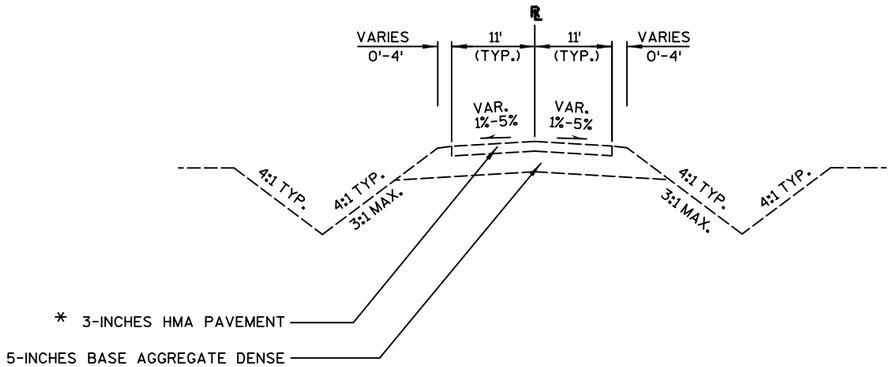

EXISTING TYPICAL SECTION

STA. 42+63.96'FE' - STA. 81+00.00'FE'

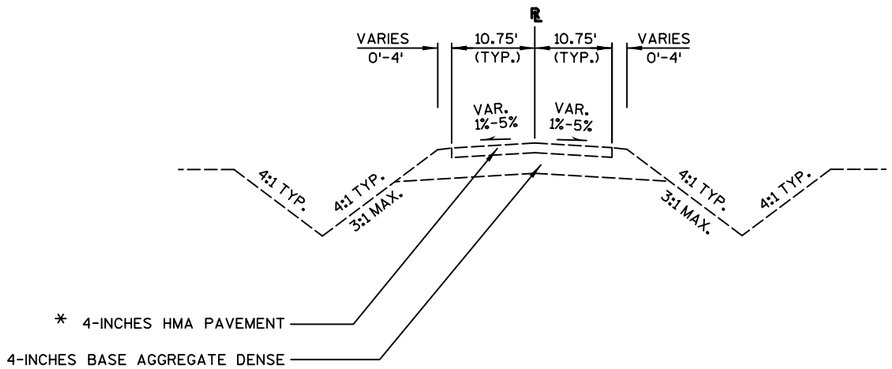

EXISTING TYPICAL SECTION

STA. 45+62.25'ISH' - STA. 102+61.89'ISH'

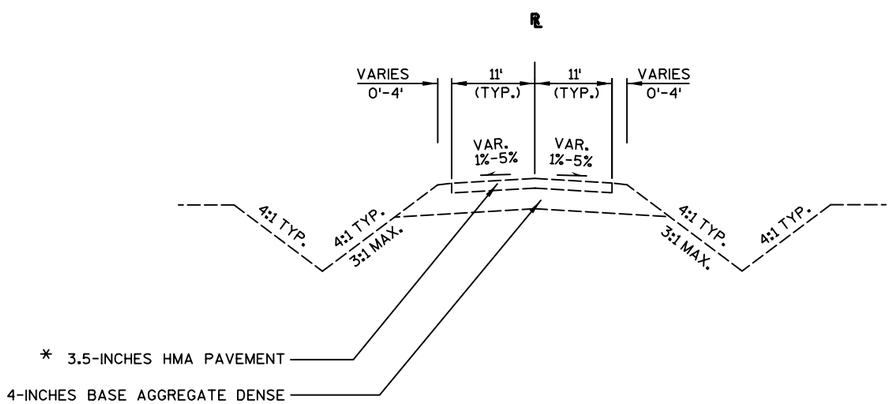

EXISTING TYPICAL SECTION

STA. 99+31.73'GA' - STA. 127+77.06'GA'

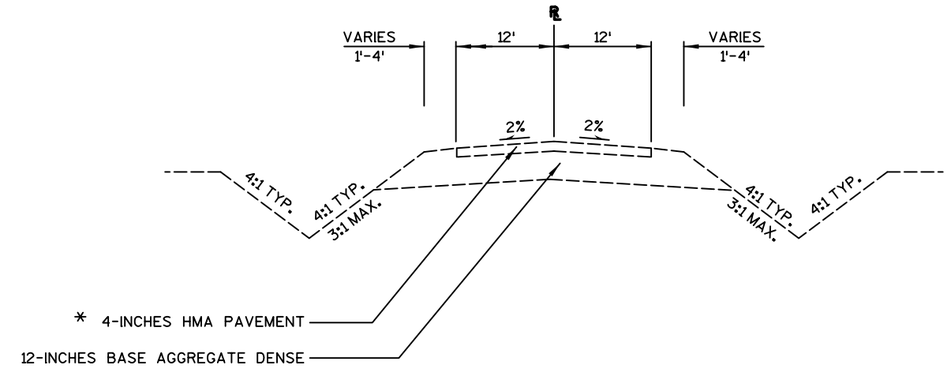

EXISTING TYPICAL SECTION

STA. 143+93.90'ZAP' - STA. 153+69.59'ZAP'

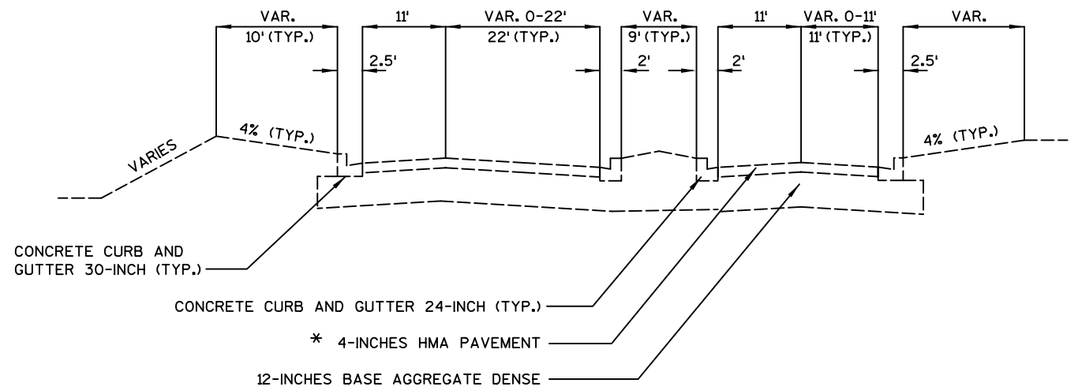

EXISTING TYPICAL SECTION

STA. 127+77.06'GA' - STA. 131+90.56'GA'
STA. 131+90.56'SU' - STA. 143+93.90'SU'

* EXISTING PAVEMENT THICKNESSES PROVIDED ARE BASED UPON AN AVERAGE OF SPOT SOIL BORINGS ALONG THE ROADWAYS. ACTUAL PAVEMENT THICKNESSES MAY VARY.

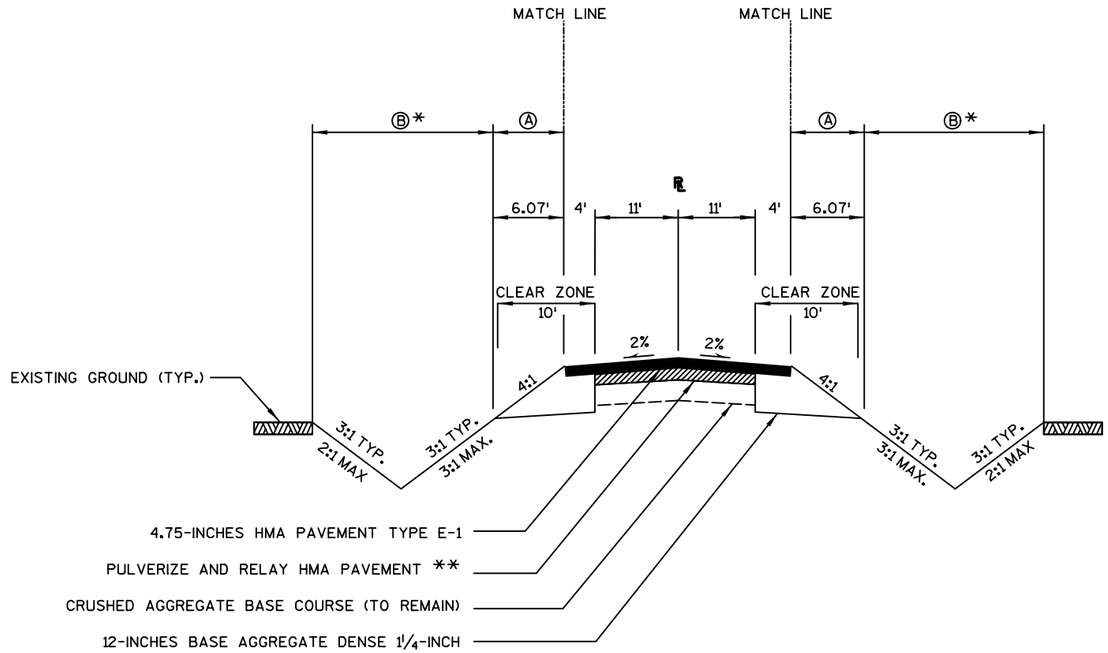

PROPOSED TYPICAL SECTION

STA. 42+63.96'FE' - STA. 81+00.00'FE'
STA. 45+62.25'ISH' - STA. 102+61.89'ISH'
STA. 99+31.73'GA' - STA. 127+70.50'GA'

** SEE EXISTING TYPICAL SECTIONS FOR EXISTING PAVEMENT THICKNESSES

Ⓐ FERTILIZER TYPE B;
SEEDING MIXTURE NO. 20

Ⓑ SALVAGED TOPSOIL; FERTILIZER TYPE B; SEEDING MIXTURE NO. 20 AND EROSION MAT CLASS I TYPE B

* STA. 42+64'FE', RT - STA. 54+50'FE', RT
STA. 42+64'FE', LT - STA. 47+00'FE', LT
STA. 45+62'ISH', RT - STA. 52+00'ISH', RT
STA. 45+62'ISH', LT - STA. 85+00'ISH', LT
SALVAGED TOPSOIL, FERTILIZER TYPE B, SEEDING MIXTURE NO. 70A AND EROSION MAT CLASS II TYPE C.

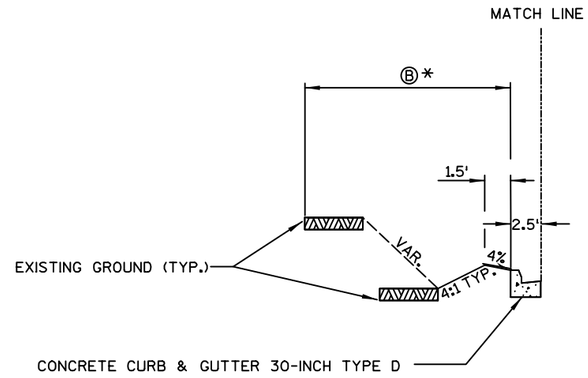

PROPOSED CURB SECTION

REVERSED WHEN CONCRETE CURB & GUTTER 30-INCH TYPE D ON THE RIGHT

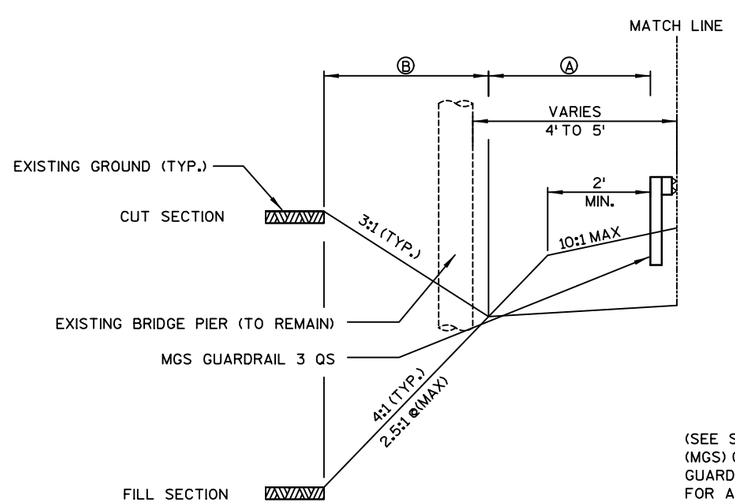

(SEE SDD'S MIDWEST GUARDRAIL SYSTEM (MGS) GUARDRAIL AND MIDWEST GUARDRAIL SYSTEM (MGS) TERMINAL FOR ADDITIONAL INFORMATION)

PROPOSED MIDWEST GUARDRAIL 3 QS/L SECTION

STA. 86+33'ISH - 88+69'ISH' (QS), LT
STA. 88+69'ISH' - 89+82'ISH' (L), LT
STA. 85+62'ISH' - 89+02'ISH' (QS), RT

REVERSED WHEN MIDWEST GUARDRAIL 3 IS ON THE RIGHT

PROJECT NO: 1674-00-70	HWY: US 12	COUNTY: SAUK	PROPOSED TYPICAL SECTIONS	SHEET 5	E

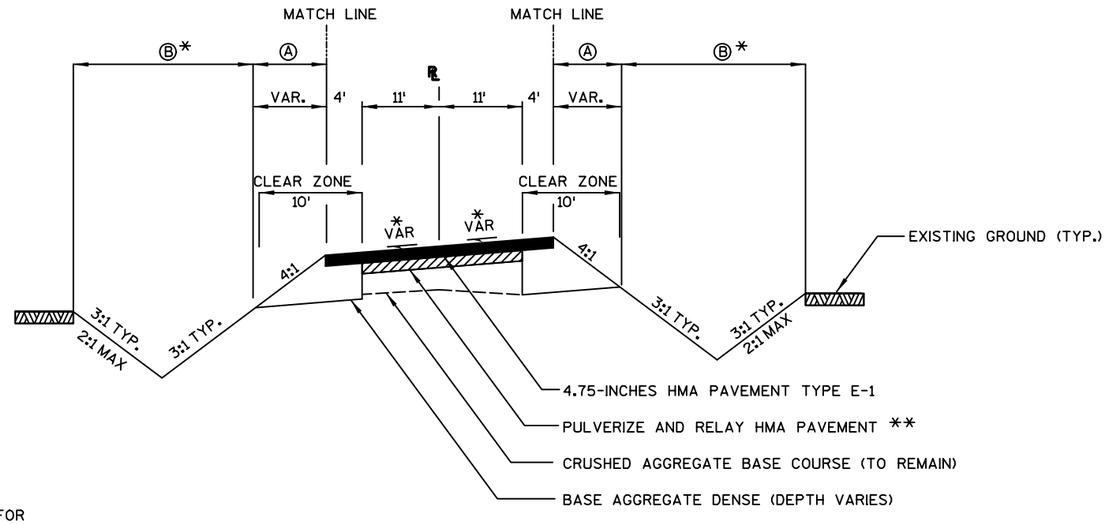

** SEE EXISTING TYPICAL SECTIONS FOR EXISTING PAVEMENT THICKNESSES

PROPOSED TYPICAL SECTION

(SEE SUPER ELEVATION TABLE FOR DETAILS)

Ⓐ FERTILIZER TYPE B;
SEEDING MIXTURE NO. 20

Ⓑ SALVAGED TOPSOIL; FERTILIZER TYPE B; SEEDING MIXTURE NO. 20 AND EROSION MAT CLASS I TYPE B

* STA. 42+64'FE', RT - STA. 54+50'FE', RT
STA. 42+64'FE', LT - STA. 47+00'FE', LT
STA. 45+62'ISH', RT - STA. 52+00'ISH', RT
STA. 45+62'ISH', LT - STA. 85+00'ISH', LT
SALVAGED TOPSOIL, FERTILIZER TYPE B, SEEDING MIXTURE NO. 70A AND EROSION MAT CLASS II TYPE C.

ISHNALA

SUPERELEVATION TABLE		
LT LANE RATE %	STATION	RT LANE RATE %
-2.0	69+87.43 'ISH'	-2.0
-2.0	70+28.43 'ISH'	0.0
-2.0	70+69.43 'ISH'	2.0
-6.0	71+50.43 'ISH'	6.0
-6.0	72+28.22 'ISH'	6.0
-2.0	73+09.22 'ISH'	2.0
-2.0	73+50.22 'ISH'	0.0
-2.0	73+91.22 'ISH'	-2.0

SUPERELEVATION TABLE		
LT LANE RATE %	STATION	RT LANE RATE %
-2.0	73+52.84 'ISH'	-2.0
0.0	73+92.84 'ISH'	-2.0
2.0	74+34.84 'ISH'	-2.0
4.4	74+84.84 'ISH'	-4.4
4.4	77+00.14 'ISH'	-4.4
2.0	77+50.14 'ISH'	-2.0
0.0	77+91.14 'ISH'	-2.0
-2.0	78+32.14 'ISH'	-2.0

SUPERELEVATION TABLE		
LT LANE RATE %	STATION	RT LANE RATE %
-2.0	82+35.89 'ISH'	-2.0
0.0	82+76.89 'ISH'	-2.0
2.0	83+17.89 'ISH'	-2.0
4.8	83+75.89 'ISH'	-4.8
4.8	86+74.66 'ISH'	-4.8
2.0	87+32.66 'ISH'	-2.0
0.0	87+73.66 'ISH'	-2.0
-2.0	88+14.66 'ISH'	-2.0

SUPERELEVATION TABLE		
LT LANE RATE %	STATION	RT LANE RATE %
-2.0	95+02.68 'ISH'	-2.0
-2.0	95+43.68 'ISH'	0.0
-2.0	95+84.68 'ISH'	2.0
-2.0	99+18.73 'ISH'	2.0
-2.0	99+59.73 'ISH'	0.0
-2.0	100+00.73 'ISH'	-2.0

GASSER

SUPERELEVATION TABLE		
LT LANE RATE %	STATION	RT LANE RATE %
-2.0	108+05.29 'GA'	-2.0
0.0	108+46.29 'GA'	-2.0
2.0	108+87.29 'GA'	-2.0
2.0	110+59.24 'GA'	-2.0
0.0	111+00.24 'GA'	-2.0
-2.0	111+41.24 'GA'	-2.0

SUPERELEVATION TABLE		
LT LANE RATE %	STATION	RT LANE RATE %
-2.0	121+36.03 'GA'	-2.0
-2.0	121+77.03 'GA'	0.0
-2.0	122+18.03 'GA'	2.0
-2.0	124+57.58 'GA'	2.0
-2.0	124+98.58 'GA'	0.0
-2.0	125+39.58 'GA'	-2.0

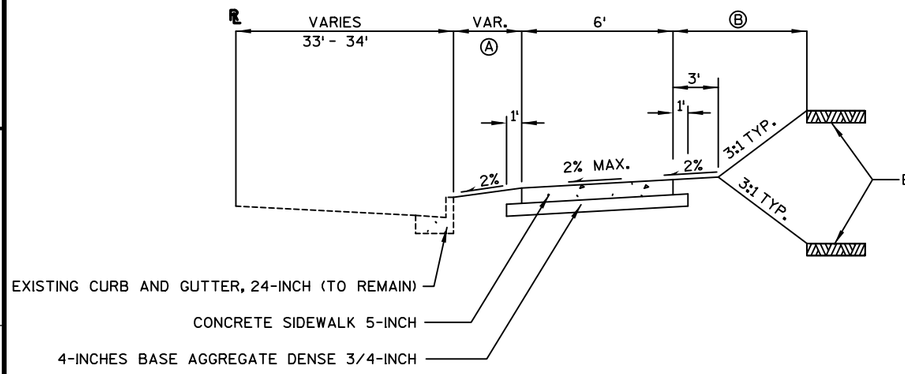

PROPOSED TYPICAL SECTION
STA. 128+75.00'GA'- STA. 130+55.67'GA'

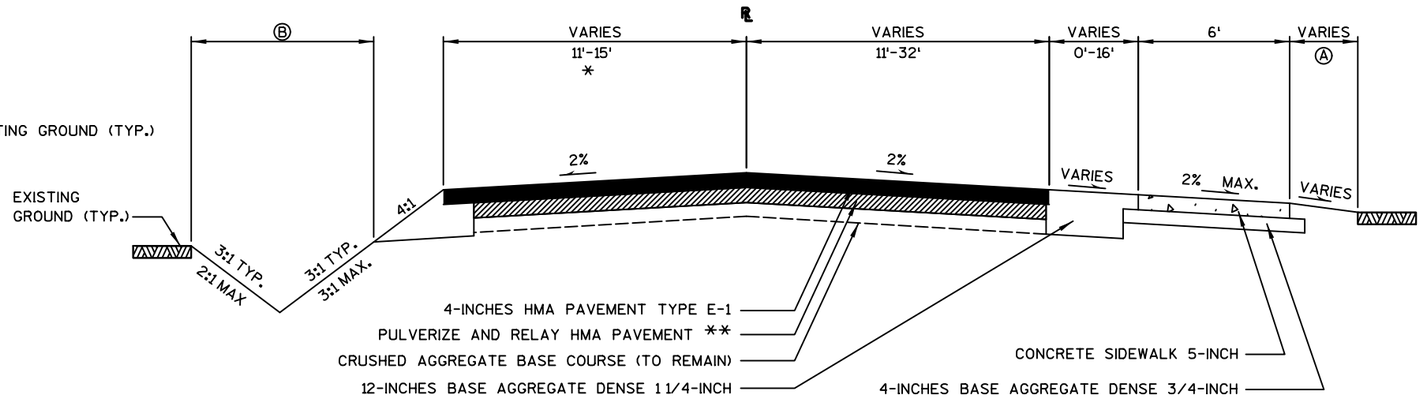

PROPOSED TYPICAL SECTION
STA. 127+70.55'GA' - STA. 128+75.00'GA'

* LT LANE PAVEMENT CONTINUES TO STA 129+06.04'GA'

** SEE EXISTING TYPICAL SECTIONS FOR EXISTING PAVEMENT THICKNESSES

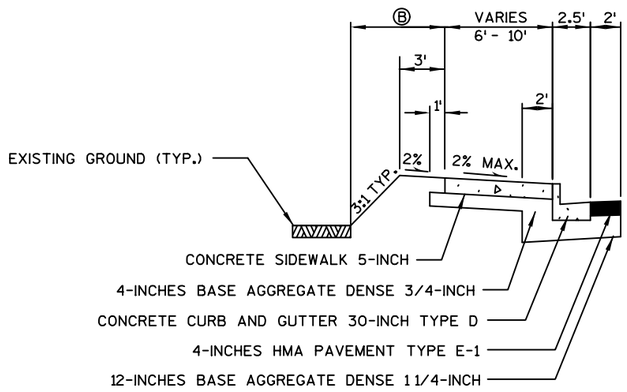

PROPOSED TYPICAL SECTION
STA. 130+55.67'GA' - STA. 132+38.95'SU'

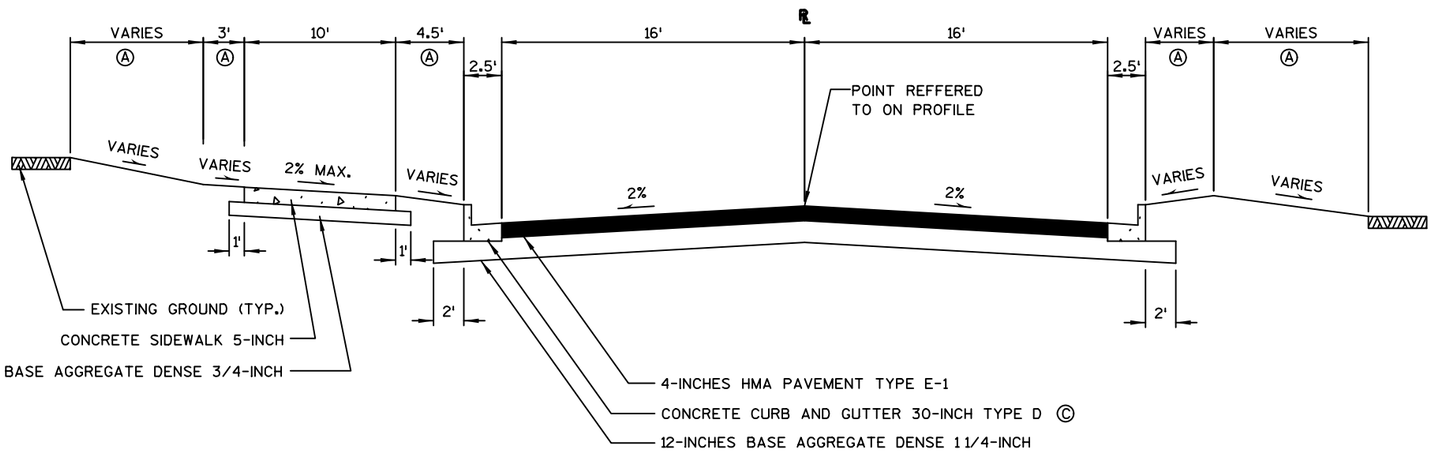

PROPOSED TYPICAL SECTION
STA. 143+43.90'ZAP' - STA. 153+69.59'ZAP

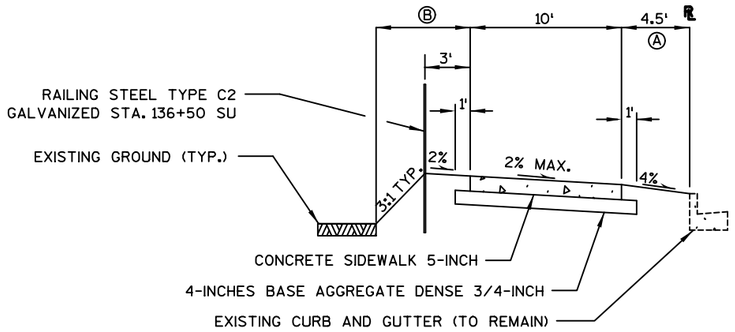

* STA. 136+03'SU' - STA. 136+87'SU'
SEE "PLAN SHEET: GASSER ROAD" FOR OFFSETS

PROPOSED TYPICAL SECTION
STA. 132+38.95'SU' - STA. 143+43.90'SU'

Ⓐ SALVAGED TOPSOIL; FERTILIZER TYPE B SEEDING MIXTURE NO. 40 AND EROSION MAT URBAN CLASS I TYPE A

Ⓑ SALVAGED TOPSOIL; FERTILIZER TYPE B SEEDING MIXTURE NO. 40 AND EROSION MAT CLASS I TYPE B

Ⓒ CONCRETE CURB AND GUTTER 24-INCH STA. 144+01 TO STA. 144+72

PROJECT NO: 1674-00-70	HWY: US 12	COUNTY: SAUK	PROPOSED TYPICAL SECTIONS	SHEET 7	E

Ⓐ SEEDING TEMPORARY, SEEDING MIXTURE NO. 40, FERTILIZER TYPE B,

Ⓑ SALVAGED TOPSOIL AND MULCHING

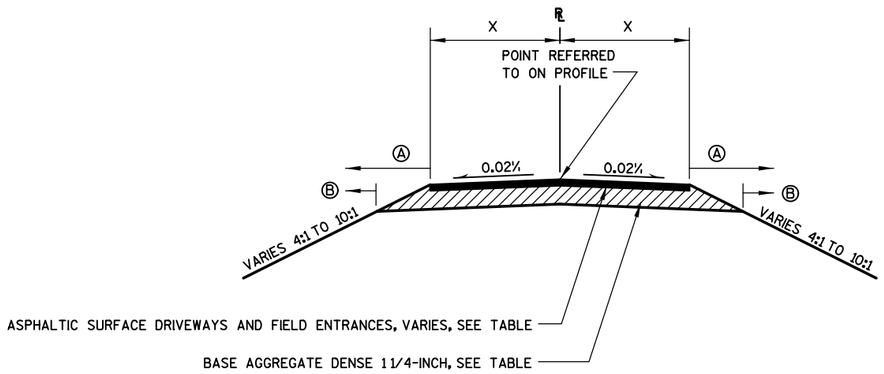

TYPICAL FINISHED SECTION - DRIVEWAY

TYPICAL SECTION APPLIES TO DRIVEWAYS SHOWN TO RIGHT

DRIVEWAY TABLE				DRIVEWAY TABLE			
STATION	X (FT)	HMA (IN)	BAD (IN)	STATION	X (FT)	HMA (IN)	BAD (IN)
54+54 'FE' RT	9.00	0.00	6.00	73+23 'ISH' RT	6.00	0.00	6.00
55+20 'FE' LT	13.50	3.50	6.00	83+36 'ISH' RT	9.00	0.00	6.00
55+53 'FE' LT	14.00	3.50	6.00	84+72 'ISH' LT	6.00	0.00	6.00
58+65 'FE' RT	7.50	0.00	6.00	85+27 'ISH' LT	13.00	3.50	6.00
59+86 'FE' RT	9.00	0.00	6.00	97+63 'ISH' LT	14.00	3.50	6.00
60+94 'FE' RT	10.00	3.50	6.00	98+75 'ISH' RT	6.00	0.00	6.00
64+80 'FE' RT	9.00	0.00	6.00	100+42 'GA' LT	10.00	0.00	6.00
67+02 'FE' RT	6.50	0.00	6.00	109+17 'GA' RT	6.50	0.00	6.00
67+55 'FE' LT	6.00	0.00	6.00	109+62 'GA' LT	6.00	0.00	6.00
69+00 'FE' RT	7.50	0.00	6.00	109+66 'GA' RT	6.00	0.00	6.00
72+97 'FE' RT	9.50	0.00	6.00	126+51 'GA' RT	8.00	0.00	6.00
73+64 'FE' LT	6.50	3.50	6.00	127+16 'GA' LT	9.00	3.50	6.00
75+02 'FE' LT	6.00	0.00	6.00	131+22 'GA' LT	18.50	3.50	6.00
58+30 'ISH' RT	8.00	0.00	6.00	137+90 'SU' LT	12.50	0.00	6.00
58+75 'ISH' LT	6.00	0.00	6.00	139+23 'SU' LT	13.00	3.50	6.00
59+00 'ISH' RT	7.00	0.00	6.00	140+15 'SU' LT	14.00	3.50	6.00
60+06 'ISH' RT	6.50	0.00	6.00	145+69'ZAP' RT	11.25	3.50	6.00
62+36 'ISH' RT	13.50	3.50	6.00	146+08'ZAP' RT	12.75	3.50	6.00
63+04 'ISH' RT	15.00	3.50	6.00	147+30'ZAP' RT	12.50	3.50	6.00
64+80 'ISH' LT	9.00	0.00	6.00	147+80'ZAP' RT'	13.50	3.50	6.00
70+20 'ISH' RT	6.00	3.50	6.00	151+74'ZAP' RT	15.25	3.50	6.00

ALL BASE AGGREGATE DENSE DRIVEWAYS INCLUDE A MINIMUM 10-FEET OF ASPHALTIC SURFACE DRIVEWAYS AND FIELD ENTRANCES.
SEE RURAL DRIVEWAY INTERSECTION DETAIL IN CONSTRUCTION DETAILS.

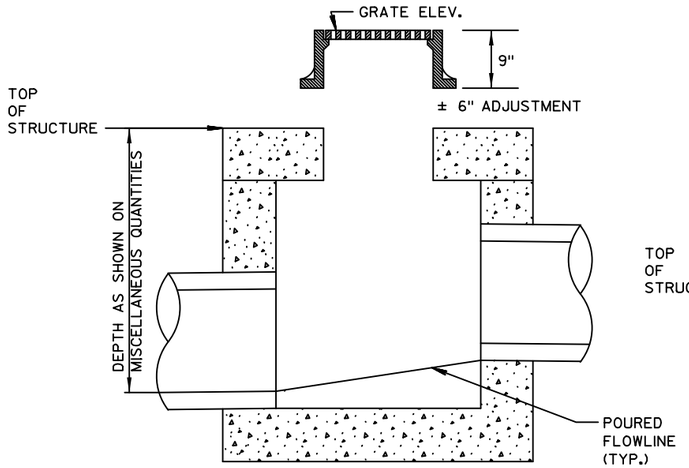

(MANHOLE 4-FT DIAMETER W/ MANHOLE COVERS TYPE J-SPECIAL SHOWN)

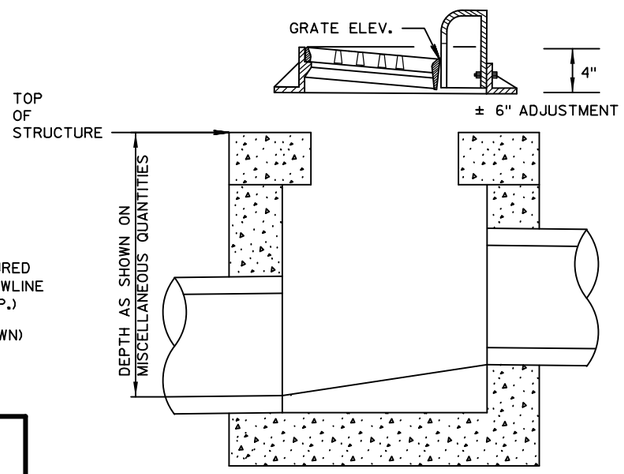

(MANHOLES 4-FT DIAMETER W/ INLET COVERS TYPE H SHOWN)

DETAIL FOR COMPUTING STRUCTURE ELEVATIONS

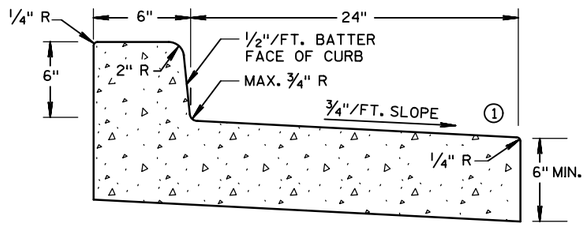

CONCRETE CURB AND GUTTER 30-INCH (REVERSE SLOPE)

① SEE PLAN DETAILS FOR REVERSE SLOPE GUTTER LOCATIONS

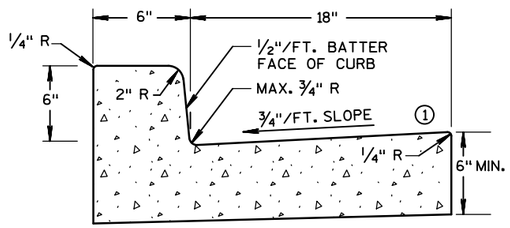

CONCRETE CURB AND GUTTER 24-INCH

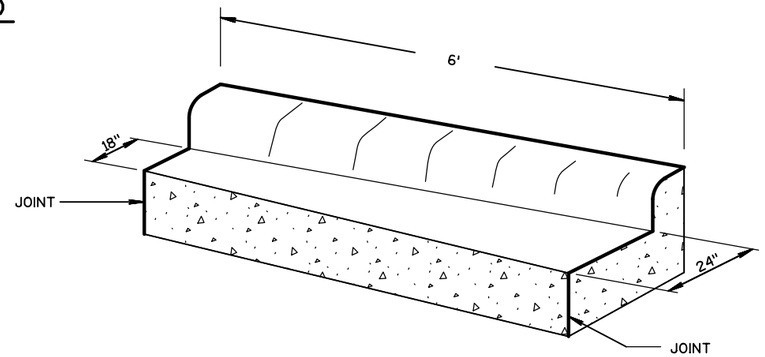

CONCRETE CURB AND GUTTER 24-INCH TRANSITION

TRANSITION FROM CONCRETE CURB AND GUTTER 30-INCH TYPE D TO CONCRETE CURB AND GUTTER 24-INCH. TO BE MEASURED AND PAID AS CONCRETE CURB AND GUTTER 30-INCH TYPE D.

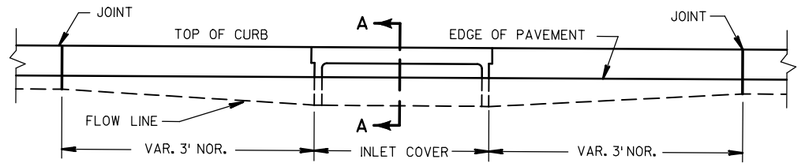

ELEVATION

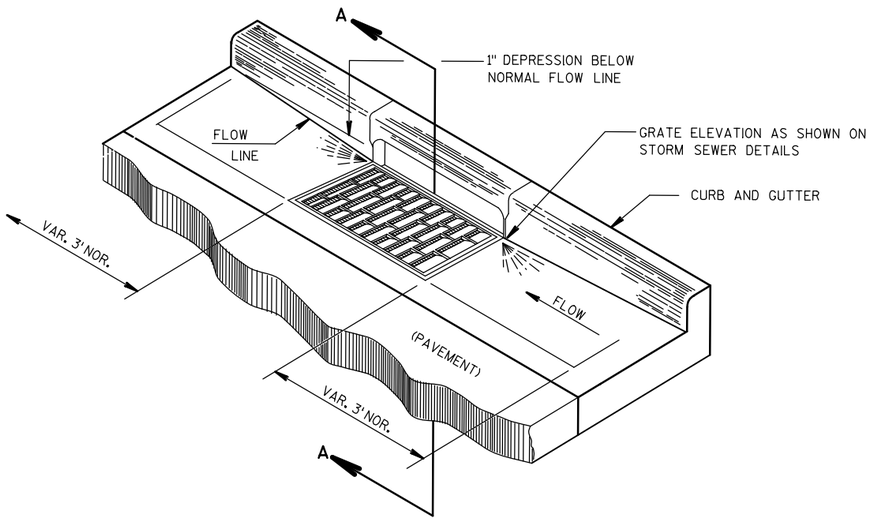

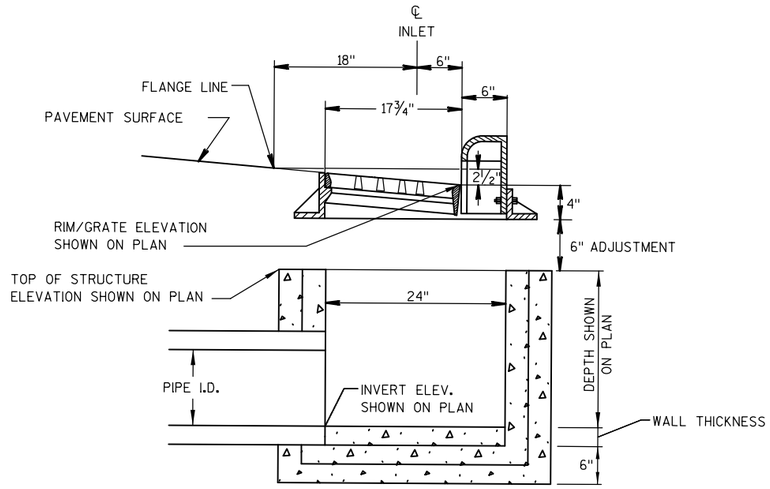

SECTION A-A

DETAIL OF CURB AND GUTTER AT INLETS

(INLETS 2X3-FT W/ INLET COVERS TYPE H SHOWN)

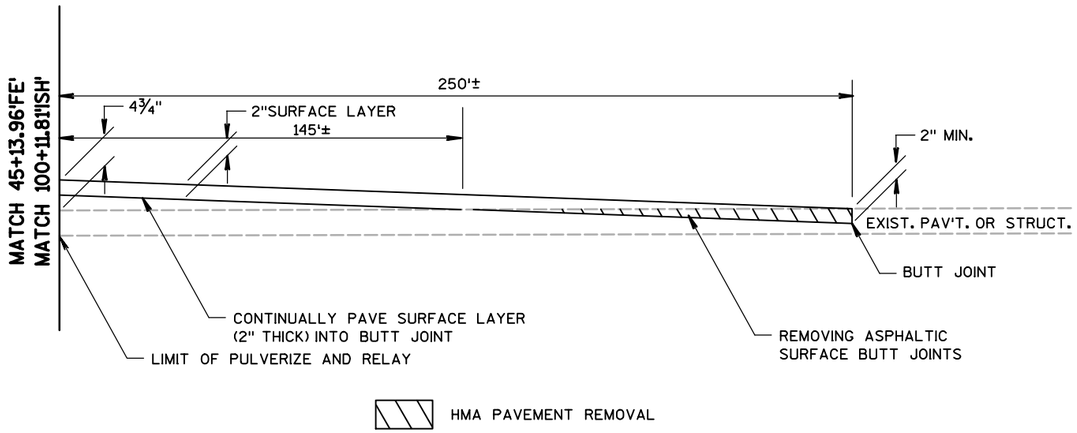

PAVEMENT END TAPER & BUTT JOINT DETAIL (2 LAYERS)

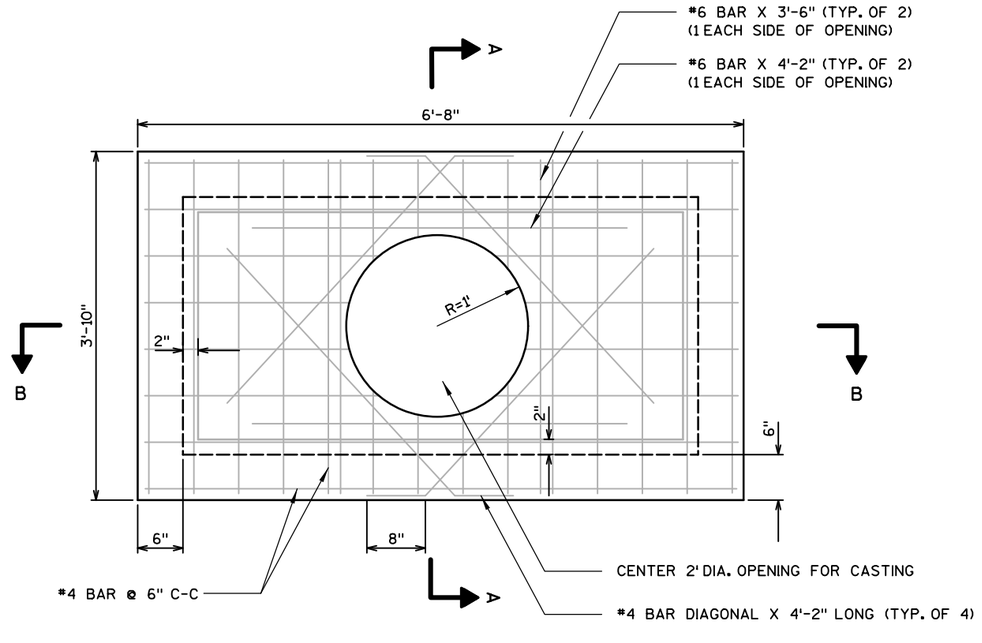

PLAN VIEW

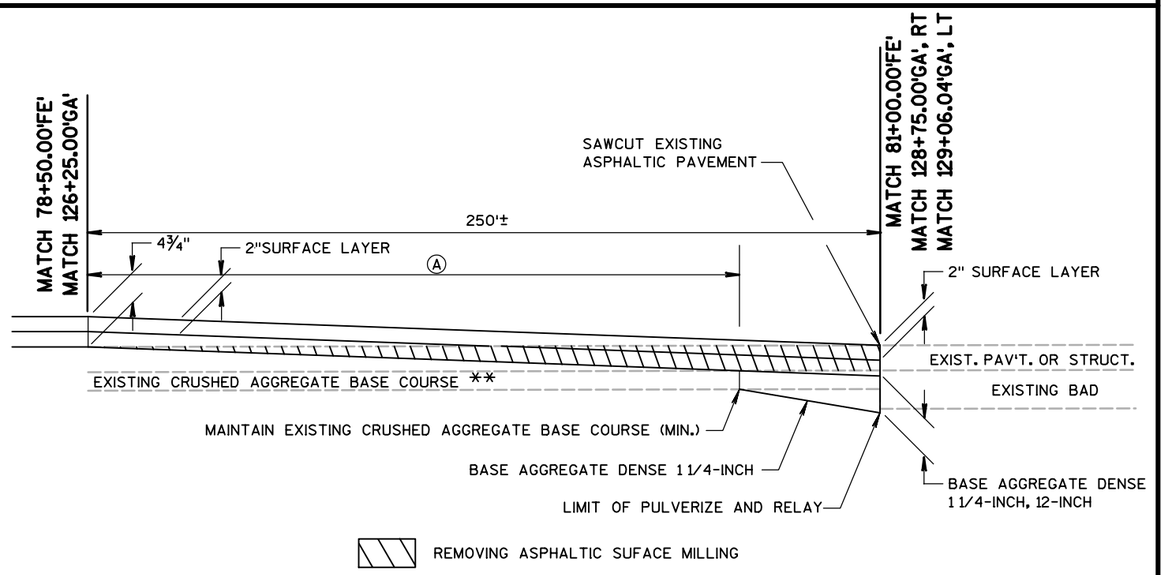

ASPHALTIC SURFACE MILLING PAVEMENT END TAPER

Ⓐ 158'± ON FERN DELL ROAD
185'± ON GASSER ROAD

** 5-INCH CRUSHED AGGREGATE BASE COURSE FERN DELL ROAD
4-INCH CRUSHED AGGREGATE BASE COURSE GASSER ROAD

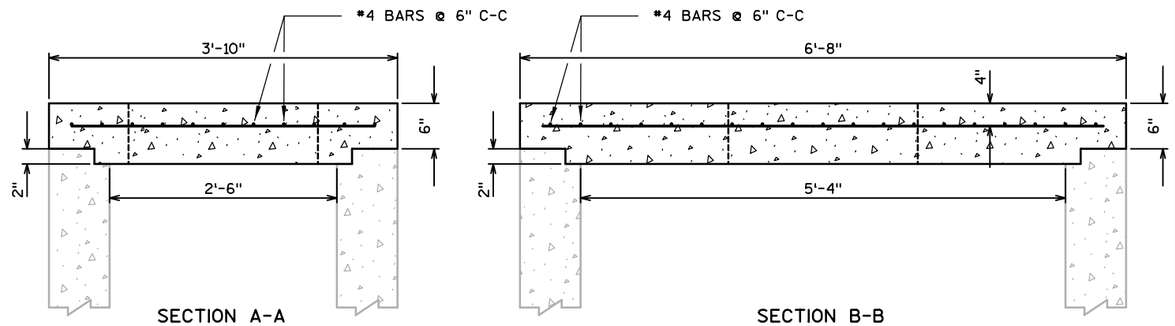

INLETS TYPE 9 FLAT SLAB TOP

STA. 153+44.35'ZAP'

PROJECT NO: 1674-00-70	HWY: US 12	COUNTY: SAUK	CONSTRUCTION DETAIL	SHEET 10	E

2

RUNOFF COEFFICIENT TABLE

	HYDROLOGIC SOIL GROUP											
	A			B			C			D		
	SLOPE RANGE (PERCENT)			SLOPE RANGE (PERCENT)			SLOPE RANGE (PERCENT)			SLOPE RANGE (PERCENT)		
LAND USE:	0-2	2-6	6 & OVER	0-2	2-6	6 & OVER	0-2	2-6	6 & OVER	0-2	2-6	6 & OVER
ROW CROPS	.08 .22	.16 .30	.22 .38	.12 .26	.20 .34	.27 .44	.15 .30	.24 .37	.33 .50	.19 .34	.28 .41	.38 .56
MEDIAN STRIP-TURF	.19 .24	.20 .26	.24 .30	.19 .25	.22 .28	.26 .33	.20 .26	.23 .30	.30 .37	.20 .27	.25 .32	.30 .40
SIDE SLOPE-TURF			.25 .32			.27 .34			.28 .36			.30 .38
PAVEMENT:												
ASPHALT	.70 - .95											
CONCRETE	.80 - .95											
BRICK	.70 - .80											
DRIVES, WALKS	.75 - .85											
ROOFS	.75 - .95											
GRAVEL ROADS, SHOULDERS	.40 - .60											

TOTAL PROJECT AREA = 25.68 ACRES
TOTAL AREA EXPECTED TO BE DISTURBED BY CONSTRUCTION ACTIVITIES = 18.78 ACRES

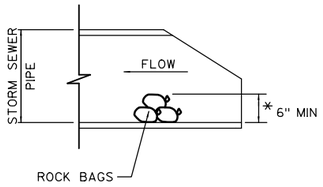

SIDE VIEW
INSTALL ON INLET END

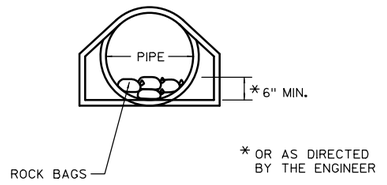

END VIEW

ESTIMATED BAG SIZE = 18" X 12" X 6"	
PIPE SIZE	ESTIMATED NO. OF BAGS
18"	2
24"	3
30"	5
48"	10
54"	10
60"	13
72"	16

CULVERT PIPE CHECKS DETAIL
AT APRON ENDWALL LOCATIONS

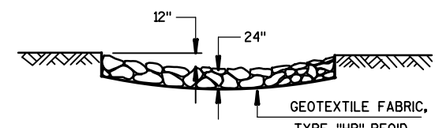

SECTION A-A
HEAVY RIPRAP

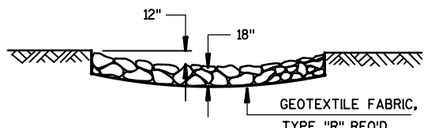

SECTION A-A
MEDIUM RIPRAP

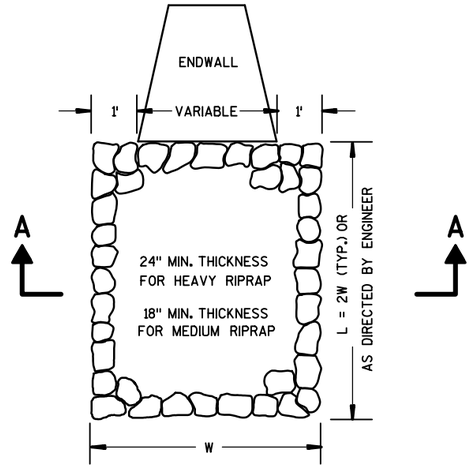

RIPRAP TREATMENT AT CULVERTS

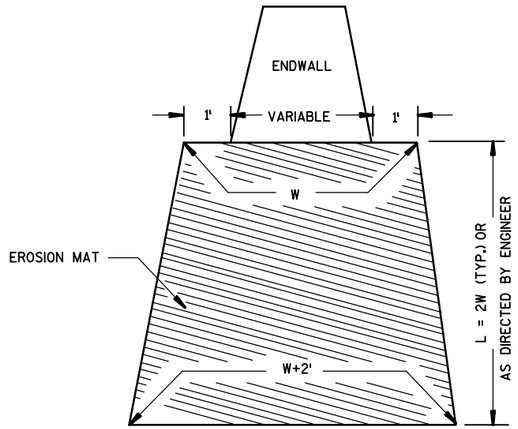

EROSION MAT TREATMENT AT CULVERTS

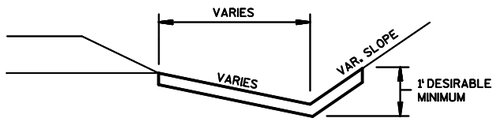

EROSION MAT DETAIL FOR DITCHES

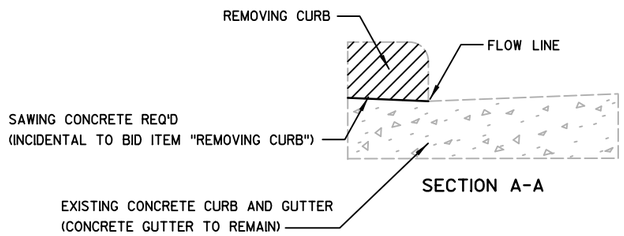

SECTION A-A

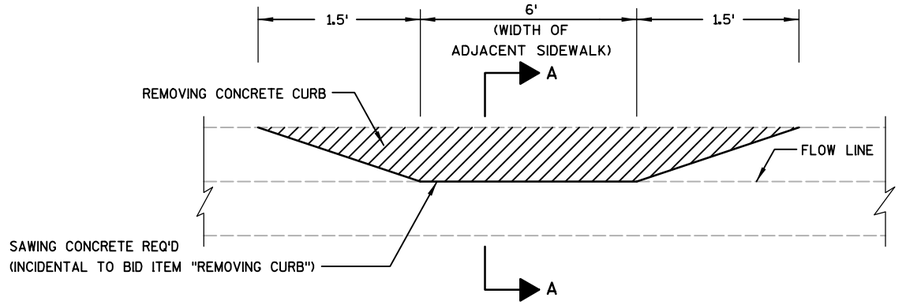

DETAIL FOR REMOVING CONCRETE CURB HEAD AT SIDEWALK LOCATIONS

STA. 130+59'GA'

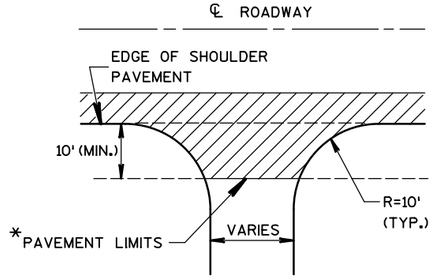

*APPROACH PAVEMENT SHOULD BE EXTENDED AS SHOWN IN CROSS SECTIONS

PLAN VIEW

RURAL DRIVEWAY INTERSECTION DETAIL

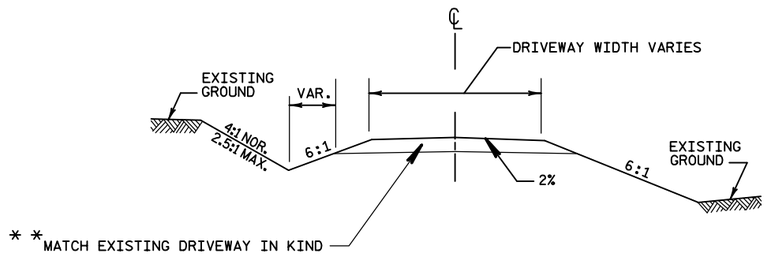

TYPICAL CROSS SECTION

** 6" BASE AGGREGATE DENSE ¾-INCH, OR 3.5" ASPHALTIC SURFACE DRIVEWAYS AND FIELD ENTRANCES OVER 6" BASE AGGREGATE DENSE 1 1/4-INCH

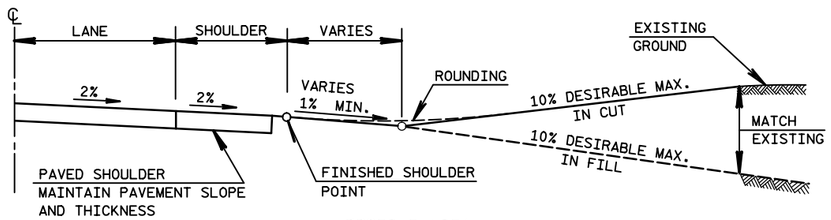

PROFILE VIEW

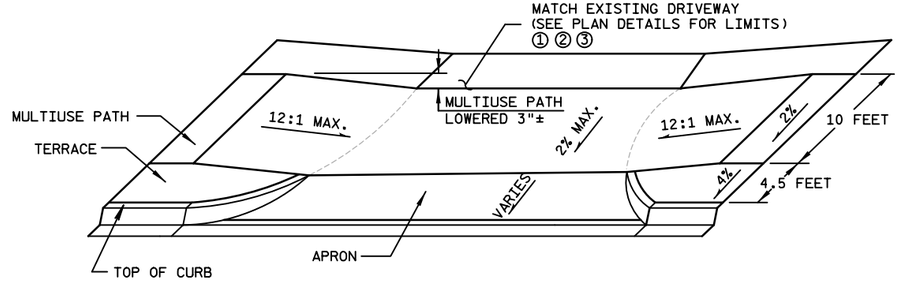

LOWERING SIDEWALK AT DRIVEWAY APRONS

STA. 137+90'SU' LOWER 2-INCHES
STA. 140+15'SU' LOWER 3-INCHES

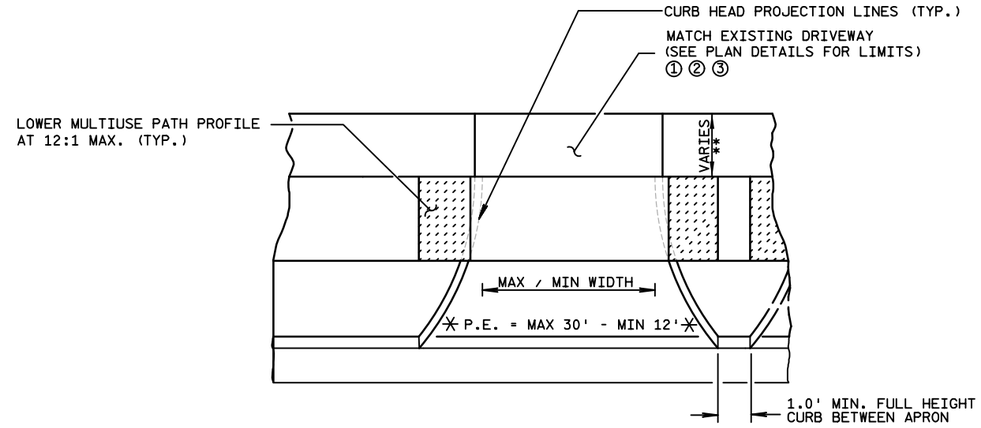

PLAN

* = 15' MIN. / 20' DES. FACE-OF-CURB RADIUS. RADIUS IS TANGENT TO DRIVEWAY

** = 10' MIN. WHEN EXISTING DRIVEWAY CONSISTS OF BASE AGGREGATE DENSE

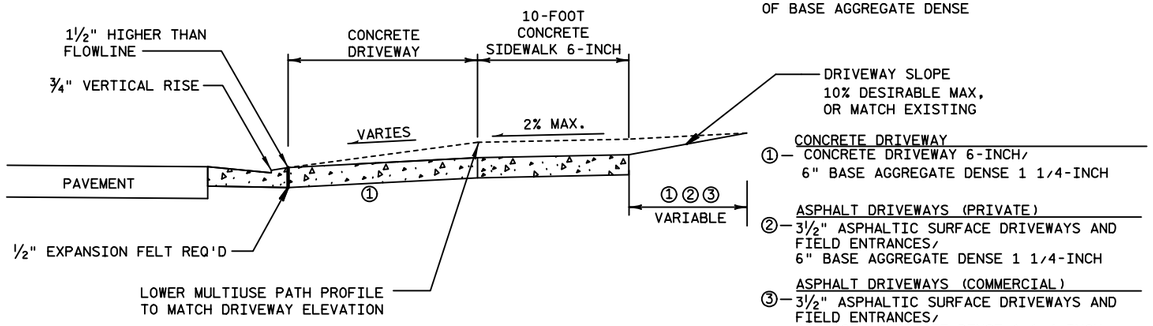

PROFILE

DRIVEWAY ENTRANCE DETAIL WITH 4.5-FOOT TERRACE

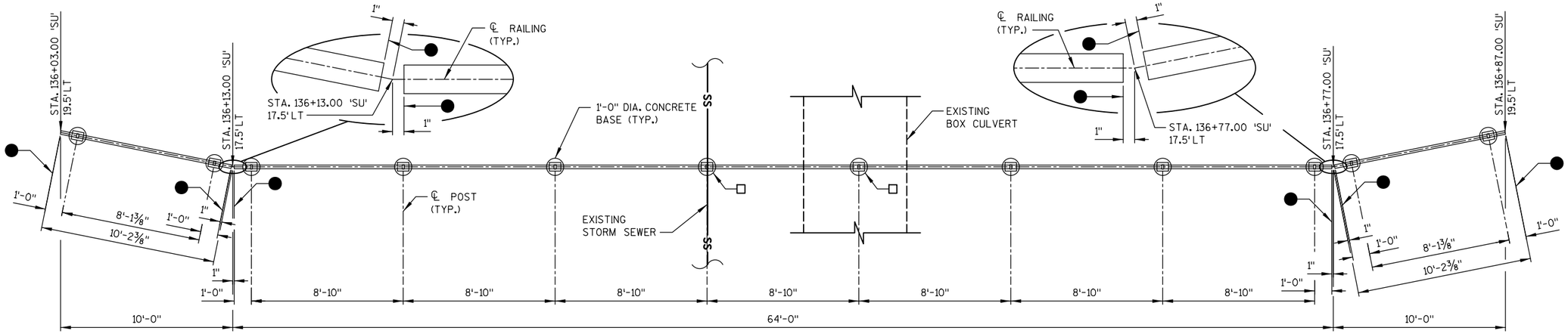

PLAN

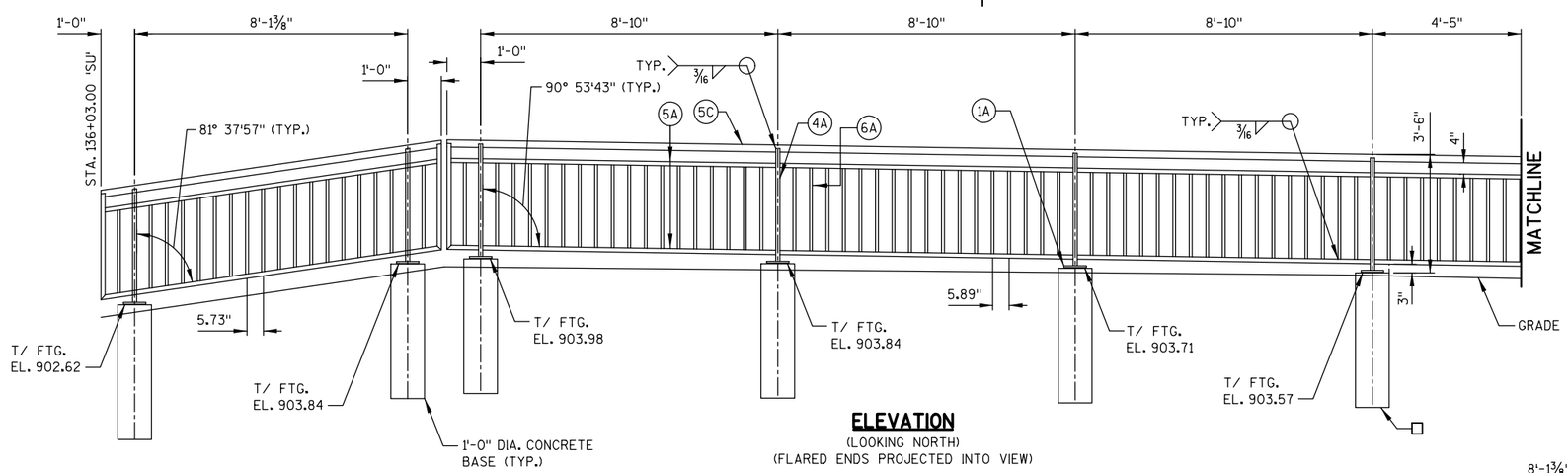

ELEVATION

(LOOKING NORTH)
(FLARED ENDS PROJECTED INTO VIEW)

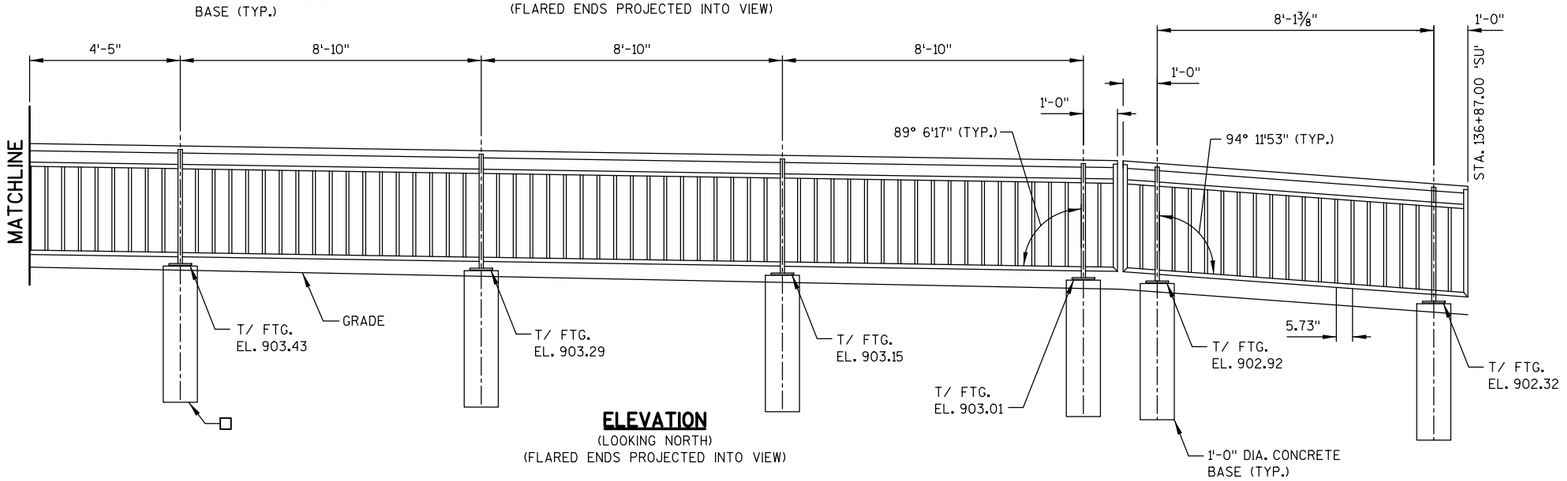

ELEVATION

(LOOKING NORTH)
(FLARED ENDS PROJECTED INTO VIEW)

LEGEND

- ● END OF RAILING SECTION.
- □ EXTEND BOTTOM OF CONCRETE BASE TO TOP OF EXISTING CONCRETE STORM SEWER OR BOX CULVERT. ESTIMATED ADDITIONAL LENGTH OF CONCRETE BASE IS ± 1'-0".

PROJECT NO: 1674-00-70	HWY: US 12	COUNTY: SAUK	RAILING DETAIL	SHEET 13	E

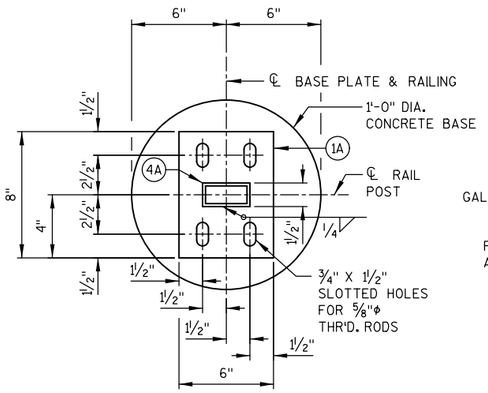

TYPICAL RAIL POST BASE PLATE

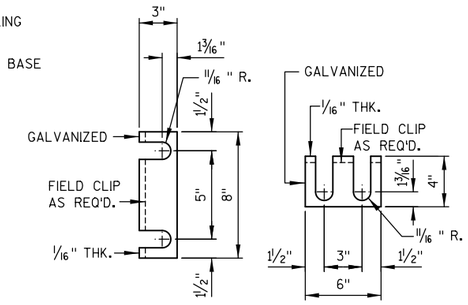

RAIL POST SHIM DETAIL

(2 SETS PER POST)

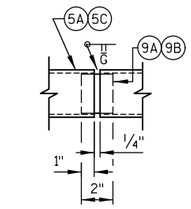

SHOP RAIL SPLICE DETAIL

(LOCATION MUST BE SHOWN ON SHOP DRAWINGS)

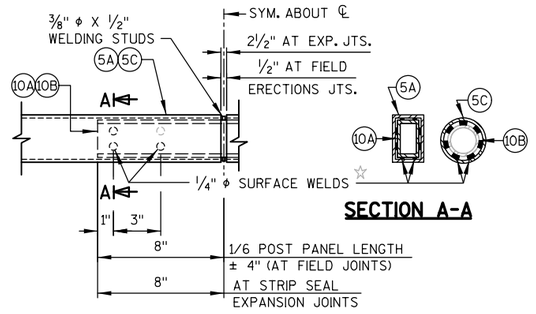

SECTION A-A

FIELD ERECTION JOINT DETAIL

☆ MIN. ⅝" FLAT SURFACE DIA. PUNCHINGS OR STUDS MAY BE USED AS AN ALTERNATE.

LEGEND

(1A) PLATE ⅝" X 6" X 8" WITH ¾" X 1½" SLOTTED HOLES.

(3) ⅝" DIA. X 9" LONG, TYPE 316 STAINLESS STEEL THREADED RODS (MIN.TENSILE STRENGTH = 70 KSI) CONCRETE MASONRY ANCHORS, TYPE S (EPOXY), MINIMUM PULLOUT CAPACITY OF 13 KIPS. EMBED A MIN. OF 7".

(4A) STRUCTURAL TUBING 3" X 1½" X 3⁄16". PLACE VERTICAL. WELD TO NO. 1 & 5.

(5A) STRUCTURAL TUBING 3" X 1½" X 3⁄16" RAILS. WELD TO NO. 1 & NO. 4. INSIDE OF TUBE TO BE PAINTED AT ALL FIELD ERECTION & EXPANSION JOINTS.

(5C) 2½" ϕ STANDARD PIPE RAIL (2.875" O.D.). WELD TO NO. 1 & NO. 4. INSIDE OF PIPE TO BE PAINTED AT ALL FIELD ERECTION & EXPANSION JOINTS.

(6A) BAR 1" X 1" PICKETS. WELD TO NO. 5. PLACE VERTICAL.

(9A) RECTANGULAR SLEEVE FABRICATED FROM 3⁄16" PLATES. PROVIDE "SLIDING FIT".

(9B) CIRCULAR SLEEVE FABRICATED FROM 2" ϕ STANDARD PIPE.

(10A) RECTANGULAR SLEEVE FABRICATED FROM 3⁄16" PLATES. (1'-4" @ FIELD ERECTION JTS.) (1'-4" @ STRIP SEAL JTS.)

(10B) CIRCULAR SLEEVE FABRICATED FROM 2" ϕ STANDARD PIPE. (1'-4" @ FIELD ERECTION JTS.) (1'-4" @ STRIP SEAL EXP. JTS.)

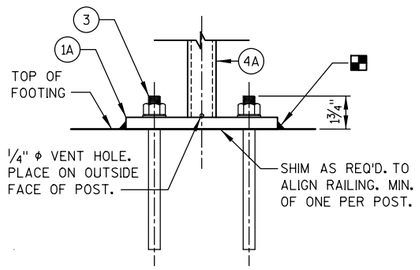

ANCHORAGE FOR RAIL POSTS

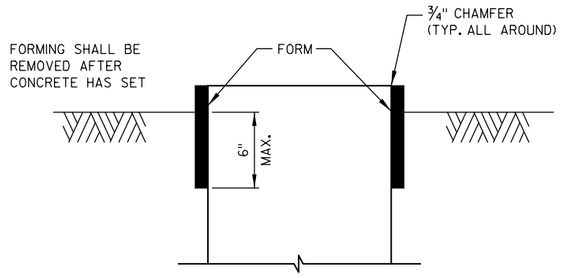

CONCRETE BASE FORMING DETAIL

RAILING NOTES

BID ITEM SHALL BE "RAILING STEEL TYPE C2 GALVANIZED STA. 136+50 'SU'", WHICH SHALL INCLUDE ALL STEEL ITEMS SHOWN.

POST BASE PLATES SHALL BE FLAT WITH ALL SURFACES SMOOTH AND FREE FROM WARP AND ALL EDGES SMOOTH, STRAIGHT AND VERTICAL. ALL PLATE CUTS SHALL BE MACHINE OR MACHINE FLAME CUTS.

NO. 1, 6, 9, AND NO. 10 SHALL CONFORM TO ASTM A709 GRADE 36. STRUCTURAL TUBING SHALL CONFORM TO ASTM A500 GRADE B (NO. 4 AND NO. 5).

ANCHORAGES SHALL BE ACCURATELY PLACED TO PROVIDE CORRECT ALIGNMENT OF RAILING. SET NORMAL TO GRADE.

CUT BOTTOM OF POST TO MAKE POST VERTICAL IN BOTH TRANSVERSE AND LONGITUDINAL DIRECTION.

■ STEEL SHIMS SHALL BE PROVIDED & USED UNDER BASE PLATES WHERE REQUIRED FOR ALIGNMENT, AND SHALL BE GALVANIZED.

CAULK AROUND PERIMETER OF BASE PLATES, NO. 1, AND FILL BOLT SLOT OPENINGS IN SHIMS AND BASE PLATES WITH NON-STAINING GRAY NON-BITUMINOUS JOINT SEALER.

ALL JOINTS AND RECESSES IN CONCRETE PARAPET ARE TO BE VERTICAL.

ALL MATERIAL (EXCEPT NO. 3) SHALL BE GALVANIZED AFTER FABRICATION. PRIOR TO GALVANIZING, THE STEEL RAILING SHALL BE GIVEN A NO. 6 BLAST CLEANING PER SSPC SPECIFICATIONS. PAINT OVER GALVANIZING WITH AN APPROVED TIE COAT AND TOP COAT AS SPECIFIED IN THE "BRIDGE SPECIAL PROVISIONS". THE RAILING SHALL BE PAINTED FEDERAL COLOR NO. 24079, FOREST GREEN.

VENT HOLES SHALL BE DRILLED IN POST AND RAIL MEMBERS AS REQUIRED TO FACILITATE GALVANIZING AND DRAINAGE.

RAILING SHALL BE FABRICATED IN LENGTHS THAT INCLUDE 3 OR 4 POSTS.

TOUCH-UP PAINTING TO BE DONE AT COMPLETION OF STEEL RAILING INSTALLATION TO THE SATISFACTION OF THE ENGINEER AT NO EXTRA COST.

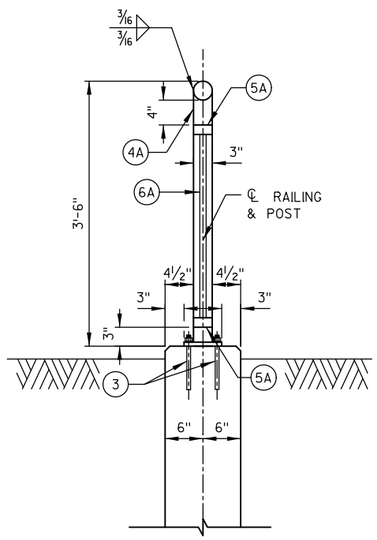

END VIEW

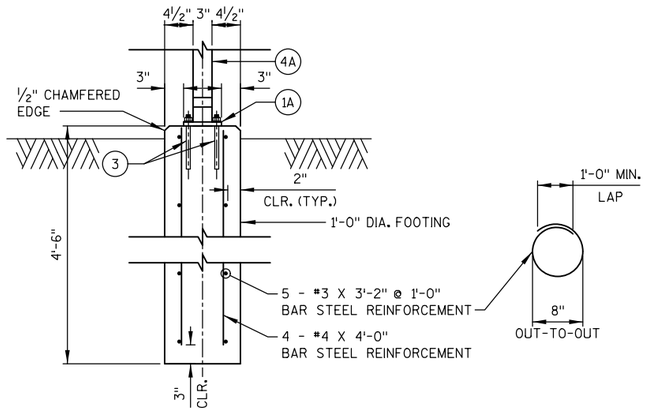

SECTION THRU FOOTING

CONCRETE BASE NOTES

BASES SHALL BE EXCAVATED BY USE OF A CIRCULAR AUGER.

TOP SURFACE OF CONCRETE BASES SHALL BR TROWEL FINISHED SMOOTH AND LEVEL.

IF A BASE REQUIRES A DEEP FORM BECAUSE OF LOOSE DIRT OR FILL, THE FORM SHALL BE REMOVED BEFORE BACKFILLING AROUND THE BASE. BACKFILL SHALL BE TAMPED TIGHT AGAINST THE BARE CONCRETE BASE IN LAYERS OF 1-FOOT OR LESS.

ALL WORK ASSOCIATED WITH CONCRETE BASES SHALL BE INCIDENTAL TO "RAILING STEEL TYPE C2 GALVANIZED STA. 136+50 'CS'" BID ITEM.

EACH CONCRETE BASE CONSISTS OF APPROXIMATELY 0.13 CUBIC YARDS OF CONCRETE AND 22 LBS. OF REINFORCING BAR STEEL.

CONCRETE SHALL BE 4,000 PSI AND SHALL MEET THE REQUIREMENTS OF GRADE A OR A-FA IN ACCORDANCE WITH SECTION 501 OF THE STANDARD SPECIFICATIONS.

REINFORCING BARS SHALL BE GRADE 60 AND SHALL MEET THE REQUIREMENTS OF SECTION 505 OF THE STANDARD SPECIFICATIONS.

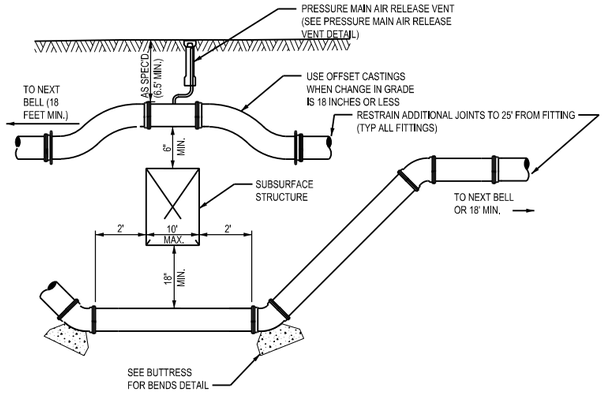

GENERAL NOTES:

1. ALL FITTINGS SHALL BE CONNECTED TO THE PIPE WITH AN APPROVED WEDGE ACTION THRUST RESTRAINING GLAND.
2. LOCATIONS OF EXISTING MAINS ARE APPROXIMATE. LENGTH REQUIRED TO BE LOWERED WILL BE DETERMINED IN THE FIELD.
3. MAINS SHALL BE INSULATED IF COVER IS LESS THAN 6.5 FEET.
4. PROVIDE CONTINUITY STRAPS ACROSS ALL FITTINGS FROM PIPE TO PIPE

PRESSURE MAIN OFFSET DETAIL
SCALE: NONE

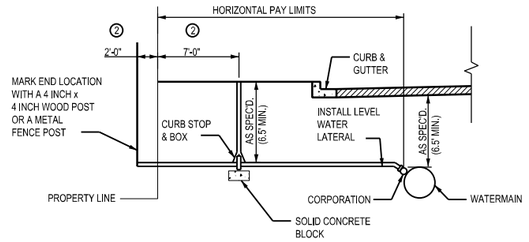

GENERAL NOTES:

1. SEE PLANS AND SPECIFICATIONS FOR SIZE AND TYPE OF CURB STOP AND BOX CORPORATION AND SERVICE LINE.
2. COMMUNITY STANDARDS SHALL SUPERSEDE THE DIMENSIONS FROM THE PROPERTY LINE.

WATER SERVICE DETAIL
SCALE: NONE

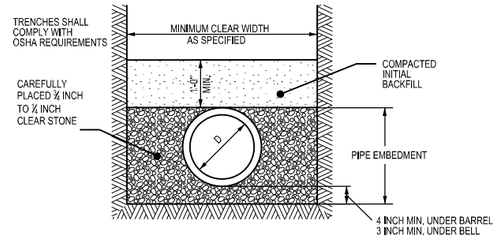

GENERAL NOTES:

1. INITIAL BACKFILL SHALL BE DENSELY COMPACTED, NON-COHESIVE FINELY DIVIDED MATERIAL FREE OF DEBRIS, ORGANIC MATERIAL, AND LARGE STONES.
2. IN ROCK OR OTHER INCOMPRESSABLE MATERIALS, THE TRENCH SHALL BE OVEREXCAVATED A MINIMUM OF 6-INCHES AND REFILLED WITH GRANULAR MATERIAL.

DUCTILE IRON WATER MAIN EMBEDMENT DETAIL
SCALE: NONE

WISCONSIN
JOHN M. LANGHANS
E-36040
LODI
WI
PROFESSIONAL ENGINEER
1-17-13

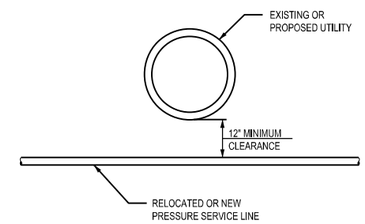

GENERAL NOTES:

1. PIPE INSULATION SHALL BE INSTALLED AS REQUIRED. SEE "PIPE INSULATION DETAIL."

PRESSURE SERVICE CROSSING DETAIL
SCALE: NONE

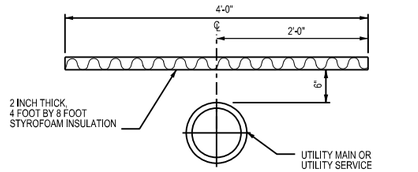

STANDARD INSTALLATION

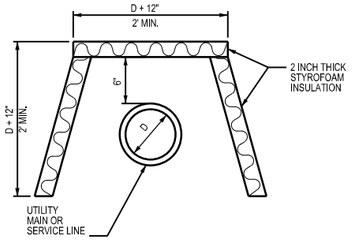

SIDE PROTECTION INSTALLATION

GENERAL NOTES:

1. THE SIDE PROTECTION INSTALLATION SHALL BE USED WHERE FROST WILL PENETRATE BELOW THE PIPE INVERT.

PIPE INSULATION DETAIL
SCALE: NONE

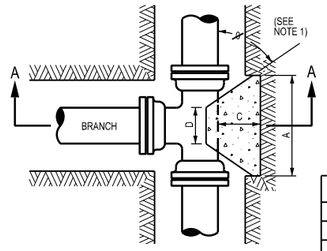

PLAN

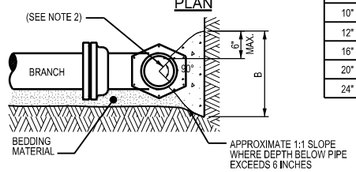

SECTION A-A

BUTTRESS DIMENSIONS				
B.D	A	B	C	D
6"	1'-3"	1'-0"	SEE NOTE NO. 1	SEE NOTE NO. 3
8"	1'-6"	1'-4"		
10"	1'-10"	1'-8"		
12"	2'-3"	2'-0"		
16"	3'-2"	2'-6"		
20"	4'-0"	3'-0"		
24"	5'-3"	3'-4"		

B.D. = BRANCH DIAMETER

NOTES:

1. PRECAST CONCRETE BLOCKS SHALL BE USED IN LIEU OF POURED-IN-PLACE CONCRETE. PRECAST CONCRETE SHALL BE PLACED TO THE DIMENSIONS SHOWN ON THESE DETAILS. ALL FITTINGS SHALL ALSO RECEIVE MEGA-LUG OR EQUAL JOINT RESTRAINT.
2. DIMENSION 'C' SHOULD BE LARGE ENOUGH TO MAKE ANGLE ∠ GREATER THAN OR EQUAL TO 45°.
3. CONCRETE SHOULD BEAR ON THIS QUADRANT OF PIPE AT A MINIMUM.
4. DIMENSION 'D' SHOULD BE AS LARGE AS POSSIBLE BUT CONCRETE SHOULD NOT INTERFERE WITH MECHANICAL JOINTS.
5. BUTTRESS DIMENSIONS ARE BASED ON A SOIL RESISTANCE OF TWO TONS PER SQ. FT. AND A WATER PRESSURE OF 150 PSI. INFORM THE ENGINEER IF ON-SITE SOIL DOES NOT MEET THIS CONDITION OR PRESSURES EXCEED 150 PSI.
6. BUTTRESS TO BE POURED AGAINST FIRM UNDISTURBED SOIL, OR DISTURBED SOIL COMPACTED TO 95% OF MODIFIED PROCTOR DENSITY, ASTM D1557.
7. CONCRETE SHALL HAVE A MINIMUM 7-DAY COMPRESSIVE STRENGTH OF 2000 PSI.

BUTTRESS FOR TEES DETAIL
SCALE: NONE

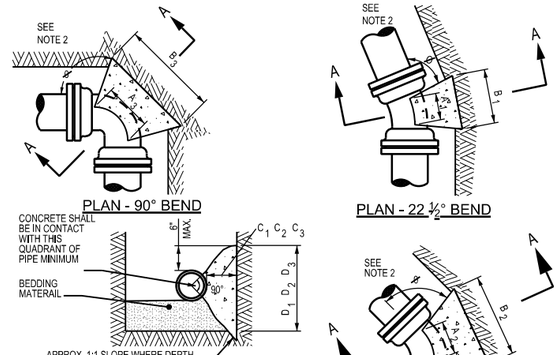

NOTES:

1. PRECAST CONCRETE BLOCKS SHALL BE USED IN LIEU OF POURED IN PLACE CONCRETE. PRECAST CONCRETE BLOCKS SHALL BE PLACED TO THE DIMENSIONS SHOWN ON THESE DETAILS. ALL FITTINGS SHALL ALSO RECEIVE MEGA-LUG OR EQUAL JOINT RESTRAINT.
2. DIMENSIONS IN TABLE ARE BASED ON A WATER PRESSURE OF 150 P.S.I. AND AN EARTH RESISTANCE OF 2 TONS PER SQ. FT. INFORM THE ENGINEER IF PRESSURES EXCEED 150 PSI, OR ON-SITE SOIL DOES NOT MEET THIS CONDITION.
3. DIMENSION $C_1C_2C_3$ SHOULD BE LARGE ENOUGH TO MAKE ANGLE ∠ EQUAL TO OR LARGER THAN 45°.
4. DIMENSION $A_1A_2A_3$ SHOULD BE AS LARGE AS POSSIBLE WITHOUT INTERFERRING WITH THE MECHANICAL JOINT.
5. BUTTRESS TO BE POURED AGAINST FIRM UNDISTURBED SOIL, OR DISTURBED SOIL COMPACTED TO 95% OF MODIFIED PROCTOR DENSITY, ASTM D1557.
6. CONCRETE SHALL HAVE A MINIMUM 7-DAY COMPRESSIVE STRENGTH OF 2000 PSI.

BUTTRESS DIMENSIONS						
PIPE SIZE	22½° BENDS		45° BENDS		90° BENDS	
	B_1	D_1	B_2	D_2	B_3	D_3
6"	1'-0"	1'-0"	1'-0"	1'-0"	1'-4"	1'-2"
8"	1'-0"	1'-0"	1'-4"	1'-2"	1'-10"	1'-6"
10"	1'-2"	1'-2"	1'-7"	1'-7"	2'-3"	1'-10"
12"	1'-4"	1'-4"	1'-10"	1'-10"	2'-8"	2'-3"
16"	1'-10"	1'-8"	2'-6"	2'-4"	3'-10"	2'-10"
20"	2'-4"	2'-0"	3'-3"	2'-10"	5'-0"	3'-4"
24"	2'-10"	2'-4"	4'-0"	3'-3"	6'-4"	3'-10"

BUTTRESS FOR FORCEMAIN & WATERMAIN BENDS DETAIL
SCALE: NONE

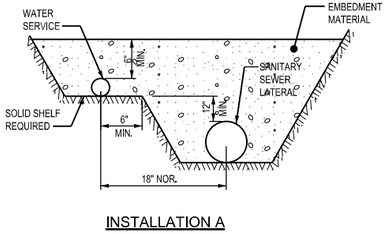

INSTALLATION A

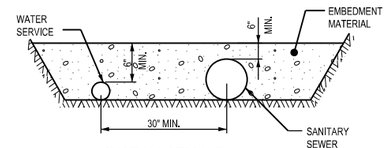

INSTALLATION B

GENERAL NOTES:

1. DETAILS OF CONSTRUCTION MATERIALS AND WORKMANSHIP NOT SHOWN ON THIS DRAWING, SHALL CONFORM TO THE PERTINENT REQUIREMENTS OF THE SPECIFICATIONS.
2. INSTALLATION B SHALL BE USED WHEN THE WATER SERVICE WILL HAVE LESS THAN 12 INCHES VERTICAL SEPARATION ABOVE THE SANITARY SEWER.
3. WATER SERVICES 2 INCHES IN DIAMETER OR LESS SHALL BE INSTALLED AS SHOWN ON THIS DETAIL. WATER SERVICES 2-1/2 INCHES OR LARGER IN DIAMETER SHALL BE INSTALLED AT LEAST 8 FEET HORIZONTALLY FROM ANY SANITARY SEWER.

WATER SERVICE AND SANITARY SEWER LATERAL DETAIL
SCALE: NONE

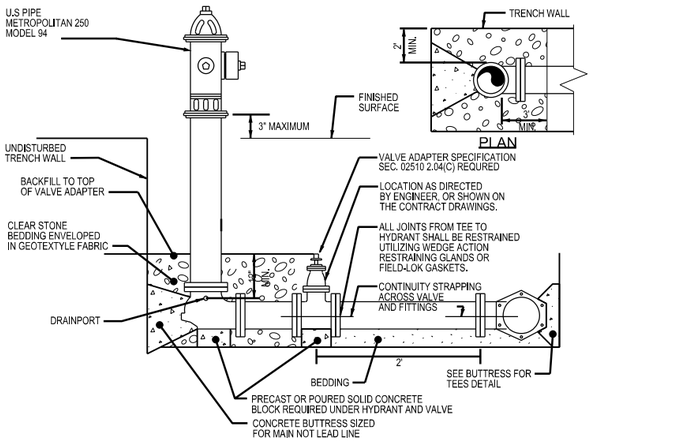

HYDRANT AND LEAD CONNECTION DETAIL

SCALE: NONE

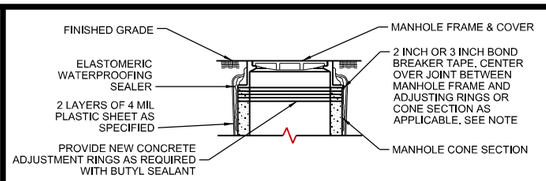

THE BOND BREAKER TAPE IS TO PREVENT THE SEALER FROM BONDING TO THE EDGE OF THE FLANGE OF THE MH FRAME AND THE UPPER 1-1/2 INCHES OF ADJUSTING RING OR CONE. IF THE EDGE OF FLANGE IS NOT FLUSH WITH ADJUSTING RING OR CONE, APPLY ADDITIONAL TAPE AS REQUIRED TO PREVENT SUCH BONDING.

EXTERNAL ELASTOMERIC FRAME/CHIMNEY SEAL

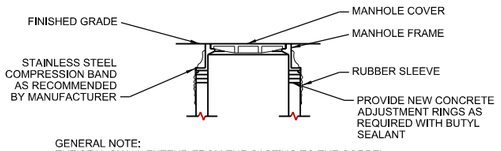

GENERAL NOTE:
THE SEAL SHALL EXTEND FROM THE CASTING TO THE CORBEL (CONE). SEAL EXTENSIONS SHALL BE USED AS REQUIRED.

EXTERNAL RUBBER SLEEVE FRAME/CHIMNEY SEAL

NOTES:
1) THE SEAL SHALL EXTEND FROM THE CASTING FLANGE TO THE EXISTING MASONRY CONE.
2) MANHOLE FRAME SHALL BE NEENAH R-1550 NON-ROCKING.
3) MANHOLE COVER SHALL BE TYPE B NON-ROCKING WITH "T" GASKET AND CONCEALED PICK HOLES.
4) SEE SPECIFICATIONS FOR ACCEPTABLE SEAL MANUFACTURERS.
5) INTERNAL SEALS SHALL ONLY BE USED IN THE EVENT THAT EXTERNAL SEALS WILL NOT FIT MANHOLE GEOMETRY.
6) BUTYL SEALANT SHALL BE USED ON ALL ADJUSTING RINGS WITH THE EXCEPTION OF RING TO CASTING INTERFACE. PROVIDE MOTAR BETWEEN CASTING AND RING TO ALLOW FOR PROPER CASTING SLOPE ADJUSTMENT.

MANHOLE WATERPROOFING SEAL AND REPLACE ADJUSTMENT DETAIL

SCALE: NONE

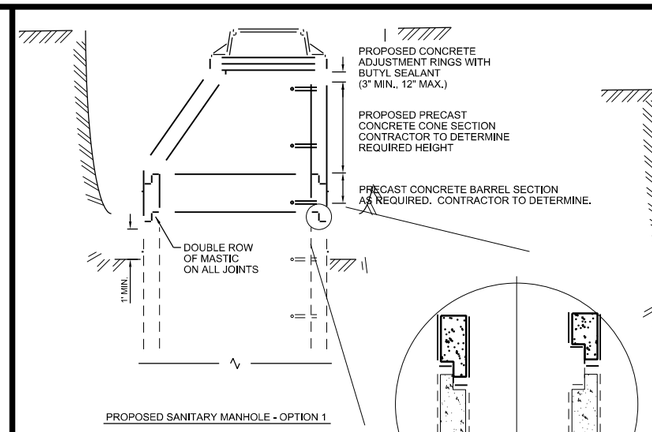

NOTES:

1) OPTION 1 MAY BE USED IF THE CONTRACTOR HAS IDENTIFIED THAT THE TONGUE AND GROVE ON THE BOTTOM OF THE NEW CONE AND BARREL SECTION WILL CORRECTLY FIT THE EXITING BARREL SECTION NOTCHES. OPTION 2 SHALL BE USED IF TONGUE AND GROVE DO NOT LINE UP.
2) FLAT TOPS MAY BE USED PROVIDED NEW ADJUSTMENT DOES NOT EXCEED 12-INCHES.

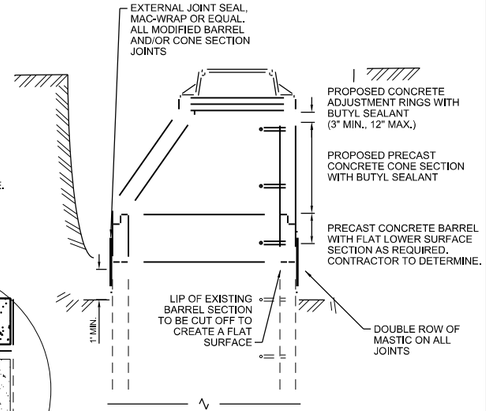

NOTES:

1) BOTTOM OF NEW BARREL SECTION, OR NEW CONE (IF BARREL IS NOT REQUIRED), SHALL BE FLAT. A DOUBLE ROW OF MASTIC SHALL BE USED BETWEEN EXISTING AND NEW BARREL SECTIONS AND AN EXTERNAL MAC-WRAP (OR EQUAL) SHALL BE APPLIED TO THE JOINT BETWEEN EXISTING AND NEW SECTIONS.
2) FLAT TOPS MAY BE USED PROVIDED NEW ADJUSTMENT DOES NOT EXCEED 12-INCHES.

RECONSTRUCT SANITARY MANHOLE

SCALE: NONE

MANHOLE ADJUSTMENT SCHEDULE

MANHOLE STATION	OFFSET	MANHOLE MATERIAL	EXISTING CASTING TYPE	PROPOSED SURFACE TYPE	EXISTING ADJUSTMENT	PROPOSED ADJUSTMENT	EXTERNAL CHIMNEY SEAL	REPLACE ADJUSTMENT	RECONSTRUCT MANHOLE	ADJUST MANHOLE	INSTALL EXISTING CASTING	NOTES/COMMENTS
102+15 'GA'	22.0' LT	PRE-CAST	STD. (9")	TURF	9" +/-	0.5' +/- DOWN	X	X		X	X	
106+18 'GA'	22.0' LT	PRE-CAST	STD. (9")	TURF	2" +/-	1.5' +/- UP	X	X	X	X	X	
110+22 'GA'	22.0' LT	PRE-CAST	STD. (9")	TURF	0"	0.25' +/- DOWN				X	X	CASTING MAY NOT NEED ADJUSTMENT. PROVIDE LOW PROFILE CASTING IF ADJUSTMENT IS NECESSARY.
114+19 'GA'	21.0' LT	PRE-CAST	STD. (9")	TURF	3" +/-	0.7' +/- DOWN	X	X	X	X	X	
118+19 'GA'	23.0' LT	PRE-CAST	LOW PROFILE (4")	TURF	0"	1.8' +/- DOWN	X	X	X	X	X	
122+24 'GA'	21.0'LT	PRE-CAST	STD. (9")	TURF	4" +/-	1.7' +/- UP	X	X	X	X	X	
126+20 'GA'	22.0' LT	PRE-CAST	STD. (9")	TURF	9" +/-	0.5' +/- DOWN	X	X		X	X	
150+23 'ZAP'	15.0' LT	PRE-CAST	STD. (9")	ASPHALT	7"	1.5' +/- DOWN	X	X	X	X	X	
151+97 'ZAP'	13.0' LT	PRE-CAST	STD. (9")	ASPHALT	8"	0.5' +/- DOWN	X	X		X	X	

***NOTE: CONTRACTOR SHALL VERIFY THE BARREL/CONE CONFIGURATION OF EACH MANHOLE TO BE RECONSTRUCTED PRIOR TO NEW MATERIAL FABRICATION. SEE DETAIL.**

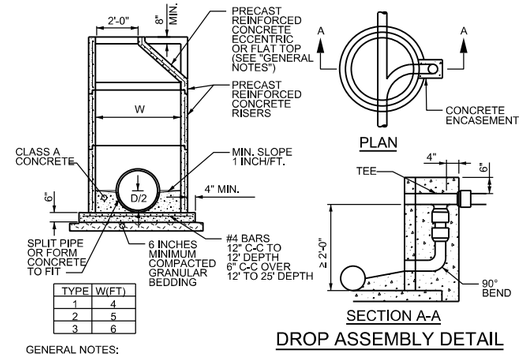

DROP ASSEMBLY DETAIL

GENERAL NOTES:

1. DETAILS OF CONSTRUCTION, MATERIALS AND WORKMANSHIP NOT SHOWN ON THIS DRAWING AND THE APPLICABLE SPECIAL CONDITIONS.
2. DETAILED DRAWINGS FOR PROPOSED ALTERNATE DESIGNS FOR UNDERGROUND STRUCTURES SHALL BE SUBMITTED TO THE ENGINEER FOR APPROVAL PROVIDING THAT SUCH ALTERNATE DESIGNS MAKE PROVISION FOR EQUIVALENT CAPACITY AND STRENGTH.
3. PRECAST REINFORCED BASES SHALL BE PLACED ON A BED OF MATERIAL AT LEAST 6 INCHES IN DEPTH, WHICH MEETS THE REQUIREMENTS FOR GRANULAR BACKFILL. THIS BEDDING SHALL BE COMPACTED AND PROVIDE UNIFORM SUPPORT FOR THE ENTIRE AREA OF THE BASE.
4. ECCENTRIC CONE TOPS SHALL BE USED ON ALL STRUCTURES 5 FEET OR GREATER IN DEPTH, AND FLAT TOPS SHALL BE USED ONLY ON STRUCTURES LESS THAN 5 FEET IN DEPTH, UNLESS DIRECTED BY THE ENGINEER.
5. PRECAST REINFORCED CONCRETE RISERS MAY BE PLACED WITH TONGUE UP OR DOWN.
6. ALL PRECAST INLET UNITS SHALL CONFORM TO THE PERTINENT REQUIREMENTS OF AASHTO DESIGNATION M 199.
7. DROP CONNECTIONS SHALL BE USED WHEN THE PIPE INVERT IS MORE THAN 2 FEET ABOVE THE MANHOLE INVERT.
8. PRECAST STRUCTURE MANWAY CLEAR OPENING SHALL MATCH CASTING - REFER TO STANDARD SPECIFICATION DIVISION 33 AND THE APPLICABLE SPECIAL CONDITIONS.
   - OPENING SHALL BE 24" FOR R-1642 CASTINGS
   - OPENING SHALL BE 27" FOR R-1550 CASTINGS

PRECAST REINFORCED CONCRETE MANHOLE DETAIL

SCALE: NONE

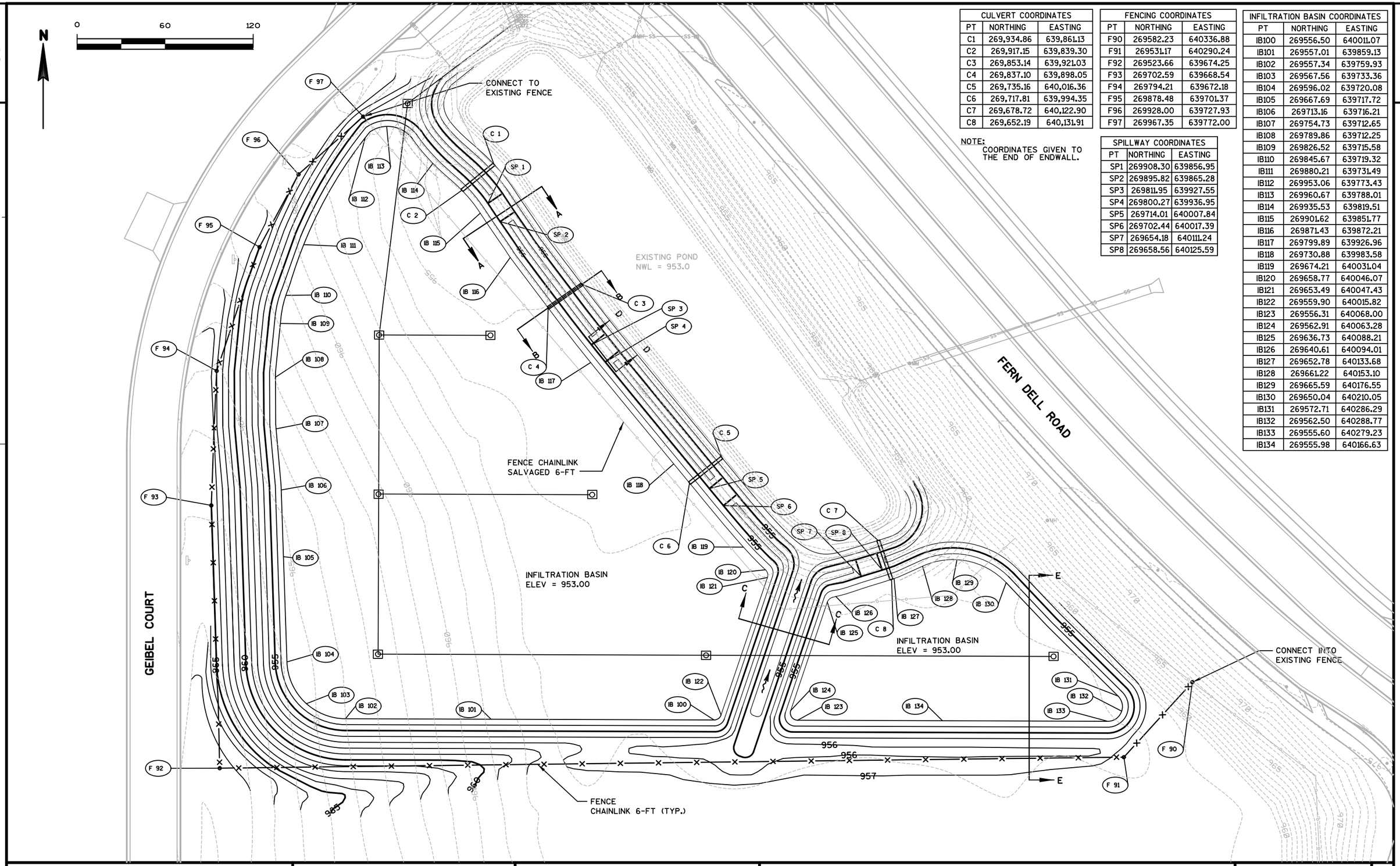

CULVERT COORDINATES		
PT	NORTHING	EASTING
C1	269,934.86	639,861.13
C2	269,917.15	639,839.30
C3	269,853.14	639,921.03
C4	269,837.10	639,898.05
C5	269,735.16	640,016.36
C6	269,717.81	639,994.35
C7	269,678.72	640,122.90
C8	269,652.19	640,131.91

FENCING COORDINATES		
PT	NORTHING	EASTING
F90	269582.23	640336.88
F91	269531.17	640290.24
F92	269523.66	639674.25
F93	269702.59	639668.54
F94	269794.21	639672.18
F95	269878.48	639701.37
F96	269928.00	639727.93
F97	269967.35	639772.00

NOTE:
COORDINATES GIVEN TO
THE END OF ENDWALL.

SPILLWAY COORDINATES		
PT	NORTHING	EASTING
SP1	269908.30	639856.95
SP2	269895.82	639865.28
SP3	269811.95	639927.55
SP4	269800.27	639936.95
SP5	269714.01	640007.84
SP6	269702.44	640017.39
SP7	269654.18	640111.24
SP8	269658.56	640125.59

INFILTRATION BASIN COORDINATES		
PT	NORTHING	EASTING
IB100	269556.50	640011.07
IB101	269557.01	639859.13
IB102	269557.34	639759.93
IB103	269567.56	639733.36
IB104	269596.02	639720.08
IB105	269667.69	639717.72
IB106	269713.16	639716.21
IB107	269754.73	639712.65
IB108	269789.86	639712.25
IB109	269826.52	639715.58
IB110	269845.67	639719.32
IB111	269880.21	639731.49
IB112	269953.06	639773.43
IB113	269960.67	639788.01
IB114	269935.53	639819.51
IB115	269901.62	639851.77
IB116	269871.43	639872.21
IB117	269799.89	639926.96
IB118	269730.88	639983.58
IB119	269674.21	640031.04
IB120	269658.77	640046.07
IB121	269653.49	640047.43
IB122	269559.90	640015.82
IB123	269556.31	640068.00
IB124	269562.91	640063.28
IB125	269636.73	640088.21
IB126	269640.61	640094.01
IB127	269652.78	640133.68
IB128	269661.22	640153.10
IB129	269665.59	640176.55
IB130	269650.04	640210.05
IB131	269572.71	640286.29
IB132	269562.50	640288.77
IB133	269555.60	640279.23
IB134	269555.98	640166.63

PROJECT NO: 1674-00-70	HWY: US 12	COUNTY: SAUK	INFILTRATION BASIN SITE PLAN	SHEET	E

FILE NAME : S:\MAD\1000--1099\1089\150\Micros\Design\Ishnala Bikepath\Plan\021005_cd.dgn PLOT DATE : 11/26/2013 PLOT BY : _username_ PLOT NAME : PLOT SCALE : $$.....plotscale.....$$ WISDOT/CADDS SHEET 42

STRUCTURE NO.	NORTHING	EASTING	INLET TYPE	GRATE TYPE	GRATE ELEV. (FT)	IE IN (FT)	IE OUT (FT)
80.1	269,972.63	639,799.24	8	MS	956.0	950.28	950.18
80.2	269,814.86	639,779.76	8	MS	953.0	950.53	950.43
80.3	269,814.64	639,855.72	8	MS	953.0	---	950.61
80.4	269,706.53	639,779.40	8	MS	953.0	950.73	950.63
80.5	269,706.10	639,925.01	8	MS	953.0	---	950.88
80.6	269,597.56	639,779.03	8	MS	953.0	950.94	950.84
80.7	269,596.77	640,002.61	8	MS	953.0	951.27	951.17
80.8	269,596.04	640,239.33	8	MS	953.0	---	951.50

80.1

DRAIN PLUG
6-INCH REQ'D

RECONSTRUCTING
INLETS REQ'D
(SEE DETAIL)

90 LF @ 0.2%
PIPE UNDERDRAIN
UNPERFORATED 6-INCH

150 LF @ 0.1%
PIPE UNDERDRAIN
WRAPPED 6-INCH

80.3

80.2

75 LF @ 0.1%
PIPE UNDERDRAIN
WRAPPED 6-INCH

97 LF @ 0.1%
PIPE UNDERDRAIN
WRAPPED 6-INCH

FENCE CHAIN LINK
SALVAGED 6-FT

80.4

80.5

145 LF @ 0.1%
PIPE UNDERDRAIN
WRAPPED 6-INCH

107 LF @ 0.1%
PIPE UNDERDRAIN
WRAPPED 6-INCH

INFILTRATION BASIN

80.6

225 LF @ 0.1%
PIPE UNDERDRAIN
WRAPPED 6-INCH

80.7

INFILTRATION BASIN

225 LF @ 0.1%
PIPE UNDERDRAIN
WRAPPED 6-INCH

80.8

EXISTING
POND
NWL = 953.0

FERN DELL ROAD

GEIBEL COURT

PROJECT NO: 1674-00-70	HWY: US 12	COUNTY: SAUK	UNDERDRAIN SITE PLAN	SHEET	E

FILE NAME : S:\MAD\1000--1099\1089\150\Micros\Design\Ishnala Bikepath\Plan\021006_cd.dgn PLOT DATE : 11/26/2013 PLOT BY : _username_ PLOT NAME : PLOT SCALE : $$.....plotscale.....$$ WISDOT/CADDS SHEET 42

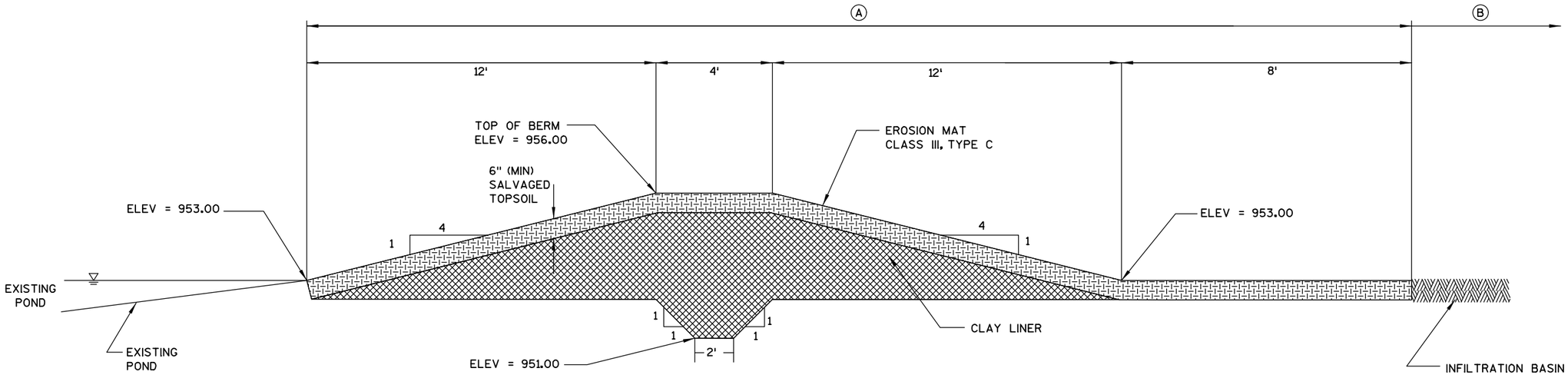

TYPICAL INFILTRATION BASIN

BERM SECTION
NO SCALE

(A) SALVAGED TOPSOIL, FERTILIZER TYPE B, SEEDING MIXTURE NO. 20, SEEDING TEMPORARY, EROSION MAT, CLASS III, TYPE C.

(B) SALVAGED TOPSOIL, FERTILIZER TYPE B, SEEDING MIXTURE NO. 75, SEEDING NURSE CROP, SEEDING TEMPORARY, MULCH.

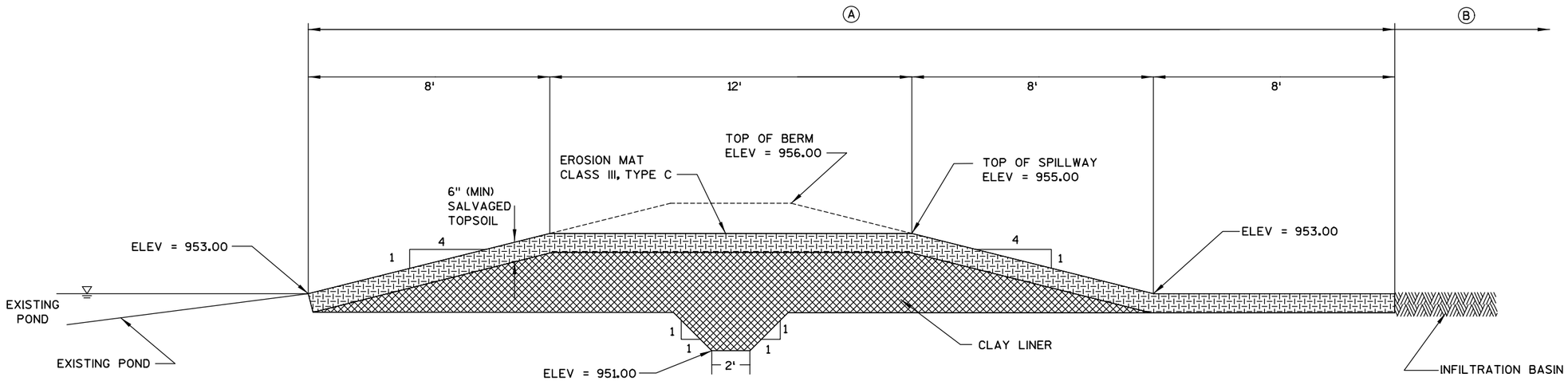

TYPICAL SECTION AT SPILLWAY

SECTION A-A
NO SCALE

(A) SALVAGED TOPSOIL, FERTILIZER TYPE B, SEEDING MIXTURE NO. 20, SEEDING TEMPORARY, EROSION MAT, CLASS III, TYPE C.

(B) SALVAGED TOPSOIL, FERTILIZER TYPE B, SEEDING MIXTURE NO. 75, SEEDING NURSE CROP, SEEDING TEMPORARY, MULCH.

PROJECT NO: 1674-00-70	HWY: US 12	COUNTY: SAUK	INFILTRATION BASIN TYPICAL SECTIONS	SHEET 19	E

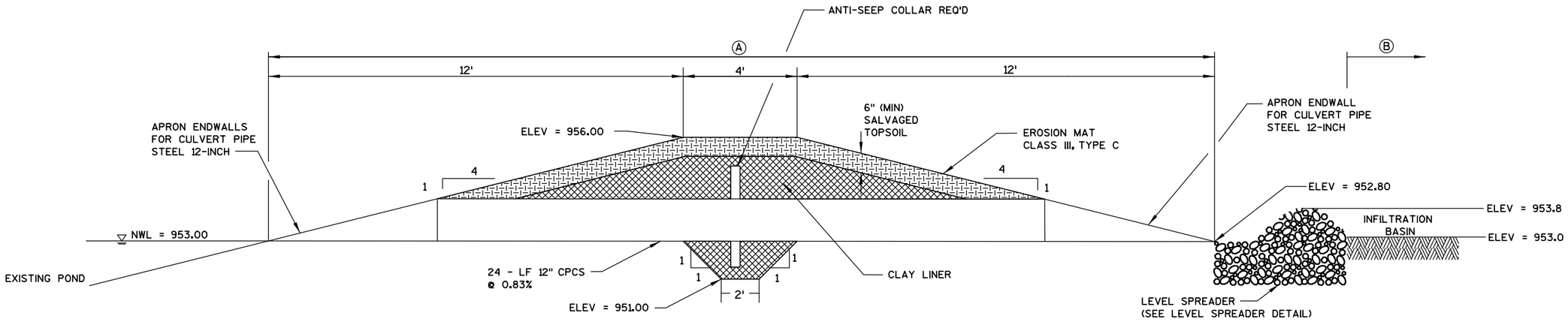

TYPICAL SECTION AT EQUALIZATION PIPE

SECTION B-B
NO SCALE

(A) SALVAGED TOPSOIL, FERTILIZER TYPE B, SEEDING MIXTURE NO. 20, SEEDING TEMPORARY, EROSION MAT, CLASS III, TYPE C.

(B) SALVAGED TOPSOIL, FERTILIZER TYPE B, SEEDING MIXTURE NO. 75, SEEDING NURSE CROP, SEEDING TEMPORARY, MULCH.

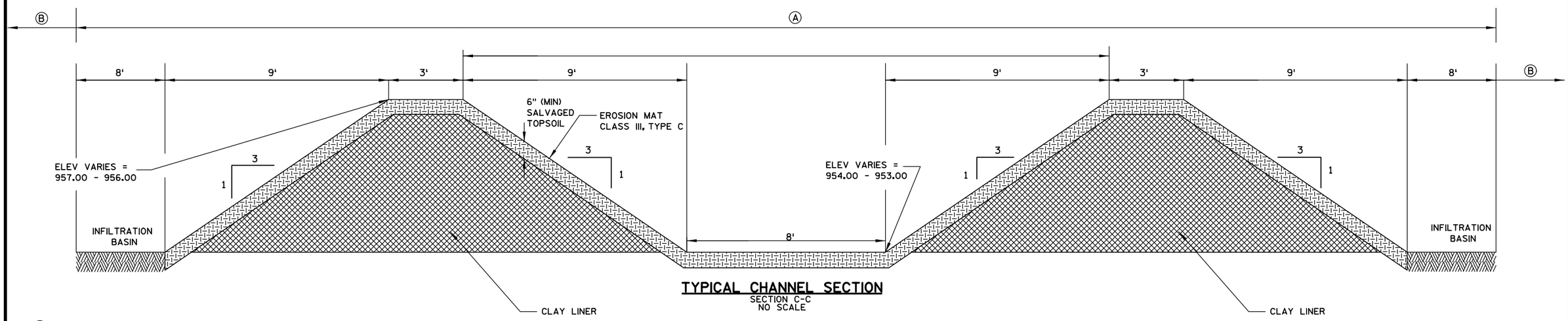

TYPICAL CHANNEL SECTION

SECTION C-C
NO SCALE

(A) SALVAGED TOPSOIL, FERTILIZER TYPE B, SEEDING MIXTURE NO. 20, SEEDING TEMPORARY, EROSION MAT, CLASS III, TYPE C.

(B) SALVAGED TOPSOIL, FERTILIZER TYPE B, SEEDING MIXTURE NO. 75, SEEDING NURSE CROP, SEEDING TEMPORARY, MULCH.

PROJECT NO: 1674-00-70	HWY: US 12	COUNTY: SAUK	INFILTRATION BASIN TYPICAL SECTIONS	SHEET 20	E

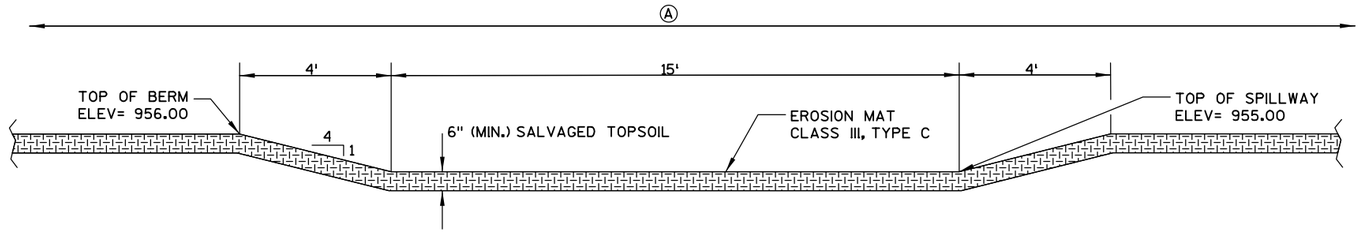

SPILLWAY (SECTION D-D)
NO SCALE

Ⓐ SALVAGED TOPSOIL, FERTILIZER TYPE B, SEEDING MIXTURE NO. 20, SEEDING TEMPORARY, EROSION MAT, CLASS III, TYPE C

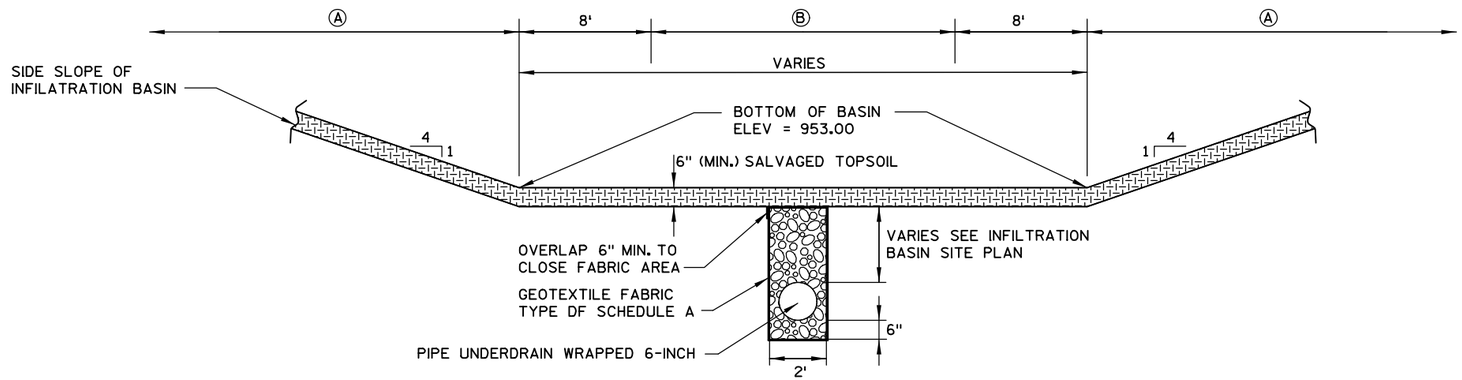

INFILTRATION BASIN AND UNDERDRAIN (SECTION E-E)
NO SCALE

Ⓐ SALVAGED TOPSOIL, FERTILIZER TYPE B, SEEDING MIXTURE NO. 20, SEEDING TEMPORARY, EROSION MAT, CLASS I, TYPE B
Ⓑ SALVAGED TOPSOIL, FERTILIZER TYPE B, SEEDING MIXTURE NO. 75, SEEDING NURSE CORP, SEEDING TEMPORARY, MULCH

PROJECT NO: 1674-00-70	HWY: US 12	COUNTY: SAUK	INFILTRATION BASIN TYPICAL SECTIONS	SHEET 21	E

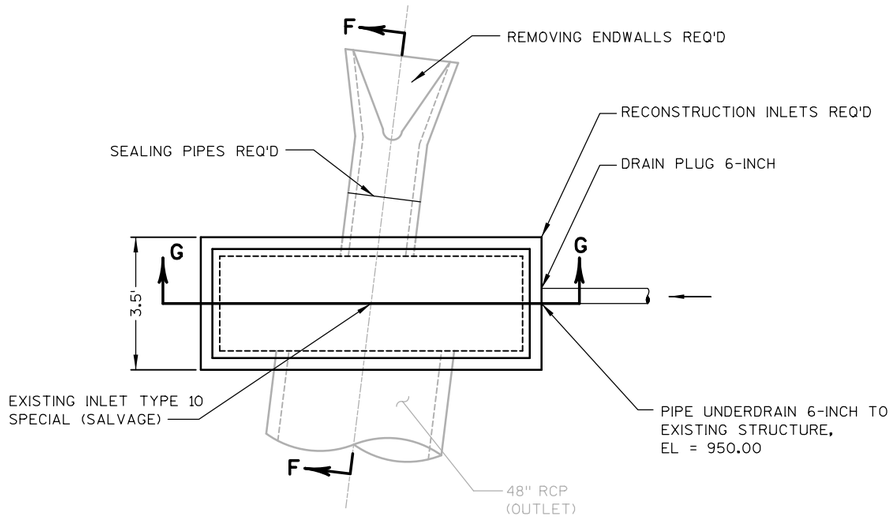

PLAN VIEW

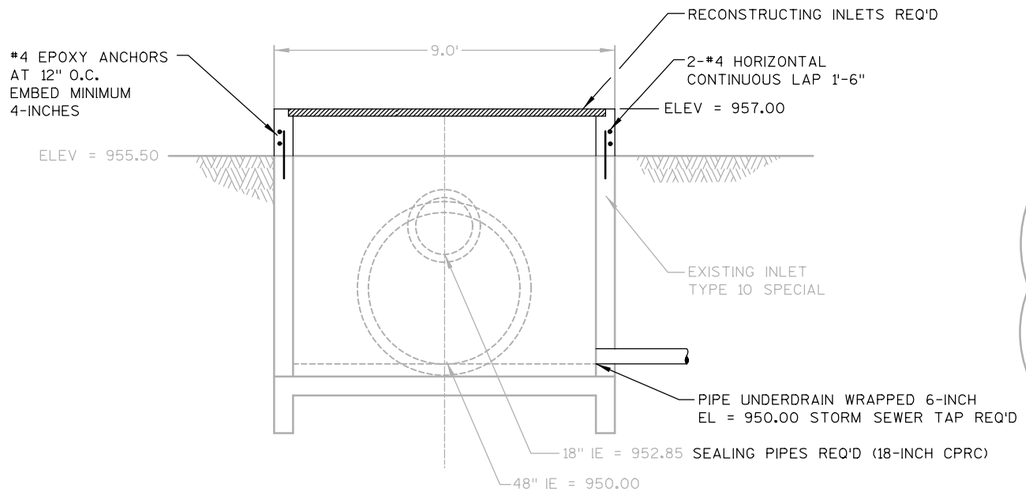

SECTION G-G

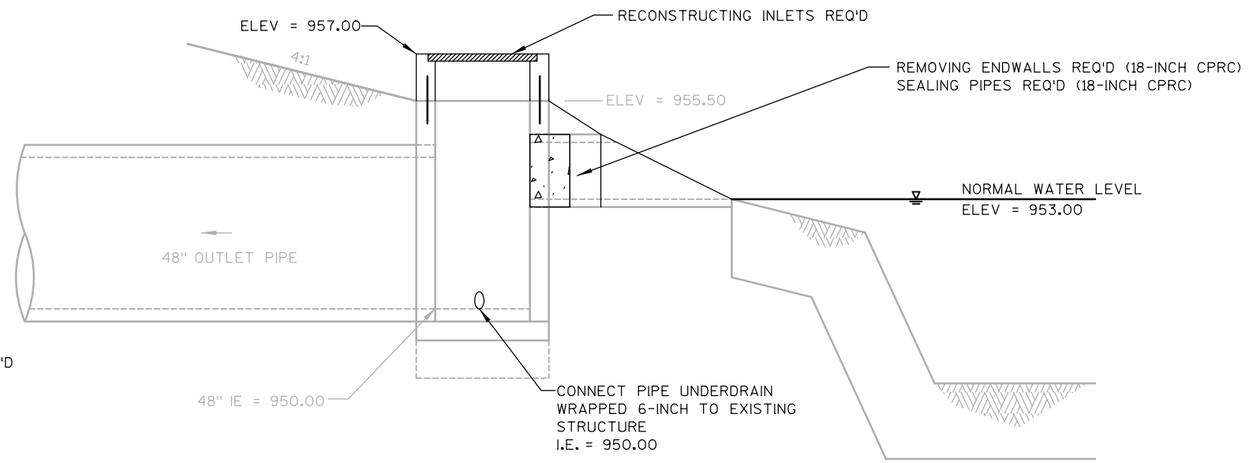

SECTION F-F

OUTLET CONTROL STRUCTURE DETAILS

NO SCALE

PROJECT NO: 1674-00-70	HWY: US 12	COUNTY: SAUK	RECONSTRUCTING INLETS DETAIL	SHEET 22	E

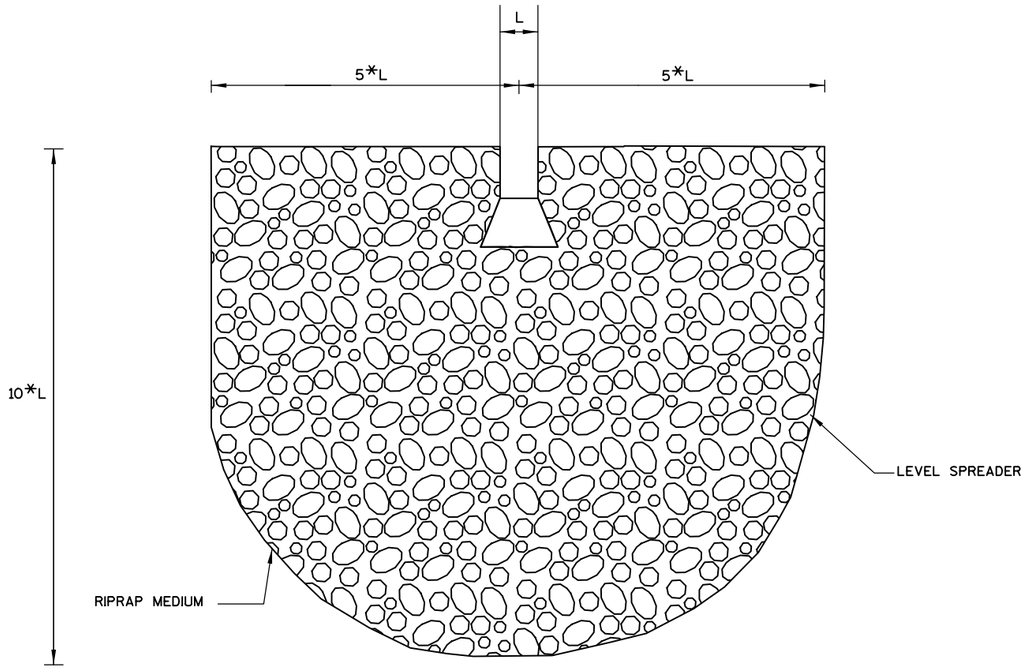

LEVEL SPREADER PLAN VIEW
NO SCALE

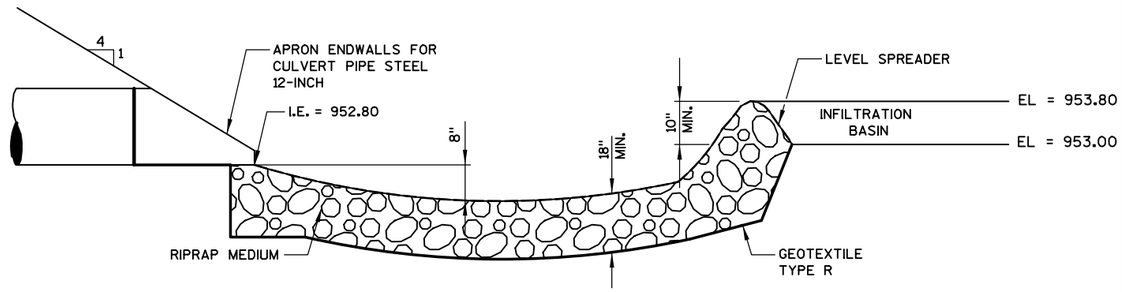

LEVEL SPREADER SECTION AT INFILTRATION BASIN
NO SCALE

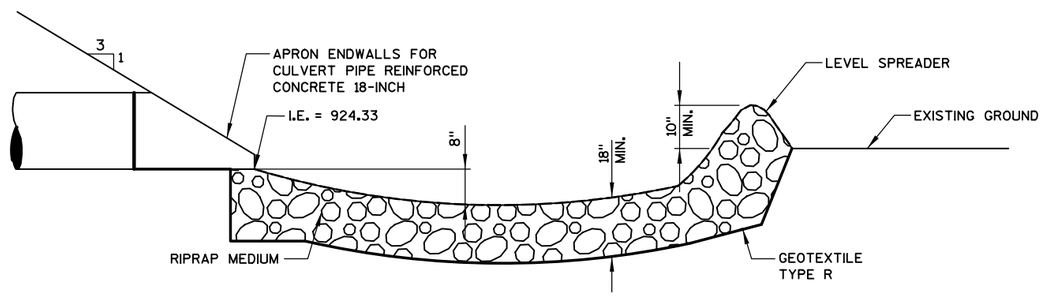

LEVEL SPREADER SECTION AT STA 46+40'ISH'
NO SCALE

PROJECT NO: 1674-00-70	HWY: US 12	COUNTY: SAUK	LEVEL SPREADER DETAIL	SHEET	E

FILE NAME : S:\MAD\1000--1099\1089\150\Micros\Design\Ishnala Bikepath\Plan\021011_cd.dgn PLOT DATE : 11/26/2013 PLOT BY : _username_ PLOT NAME : PLOT SCALE : $$.....plotscale.....$$ WISDOT/CADDS SHEET 42

2

N

0 20 40

ISHNALA ROAD

47+00'ISH'

STA. 46+24.78'FE', 55.0' LT
STA. 46+24.78'ISH', 55.0' RT

931.26

930.85

2.0%

2.0%

930.96

STA. 45+14.14'FE', 55.24'LT
STA. 46+10.63'ISH', 55.0', LT

R = 40'

R = 40'

46+00'ISH'

5.15%

1.93%

STA. 44+58.58'FE',
10.90' LT

934.61

10:1 TAPER

932.27

11'

2%

45+00'FE'

933.82

932.61

46+00'FE'

2%

11'

2%

937.47

934.12

10:1 TAPER

932.50

STA. 44+58.47'FE',
11.10' RT

934.61

933.82

932.27

FERN DELL ROAD

SEE CONSTRUCTION DETAIL
PAVEMENT END TAPER AND
BUTT JOINT DETAIL (2 LAYERS)

N

0 20 40

964.65

965.09

2.0%

2.0%

SEE CONSTRUCTION DETAIL
PAVEMENT END TAPER AND
BUTT JOINT DETAIL (2 LAYERS)

100+00'ISH'

STA. 100+08.60'GA', 75.0' LT
STA. 100+11.72'ISH', 71.1' RT

STA. 99+97.01'ISH', 10.23' LT

0.19%

R = 60'

2.0%

2.0%

966.21

965.45

1.53%

964.87

2%

100+00'GA'

2%

GASSER ROAD

964.74

965.44

0.43%

965.56

0.36%

99+00'ISH'

CONCRETE CURB AND GUTTER
30-INCH (REVERSE SLOPE)

2.0%

2.0%

965.36

R = 40'

STA. 99+78.34'GA', 55.0' RT
STA. 98+85.46'ISH', 55.0' RT

965.35

98+00'ISH'

ISHNALA ROAD

965.33

CONCRETE CURB AND GUTTER
30-INCH (REVERSE SLOPE)

965.54

97+00'ISH'

965.60

24-INCH CURB AND
GUTTER TRANSITION

+72
902.02

+72
902.02

24-INCH CURB AND
GUTTER TRANSITION

ZAP DRIVE

STA. 144+14.87'ZAP', 33.9' LT

STA. 144+12.52'ZAP', 32.0' RT

STA. 143+58.11'SU', 17.7' LT
STA. 144+18.21'ZAP', 43.0' LT

R=10'

R=17'

+13
902.54

+11
902.71

R=15'

143+00'SU'

144+00'ZAP'

+03
MATCH EXISTING

+03
MATCH EXISTING

GASSER ROAD

N

0 20 40

IP

IP

STA. 153+46.99'ZAP', 39.5' LT

24-INCH CURB AND
GUTTER TRANSITION

+68
MATCH EXISTING

R=24'

+42
903.54

+49
903.66

153+00'ZAP'

ZAP DRIVE

+42
903.54

+49
903.65

W. FRONTAGE ROAD

24-INCH CURB AND
GUTTER TRANSITION

R=24'

+68
MATCH EXISTING

STA. 153+47.00'ZAP', 39.5'RT

N

0 20 40

2

PROJECT NO: 1674-00-70	HWY: US 12	COUNTY: SAUK	INTERSECTON DETAILS	SHEET	E

FILE NAME : S:\MAD\1000--1099\1089\150\Micros\Design\Ishnala Bikepath\Plan\021101_id.dgn PLOT DATE : 11/26/2013 PLOT BY : _username_ PLOT NAME : PLOT SCALE : $$.....plotscale.....$$ WISDOT/CADDS SHEET 42

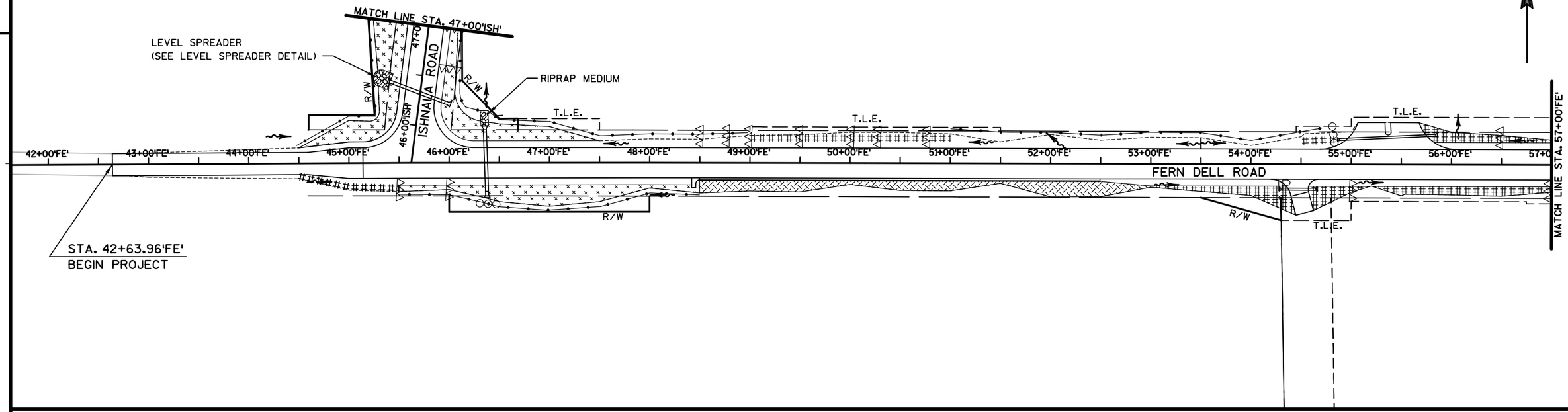

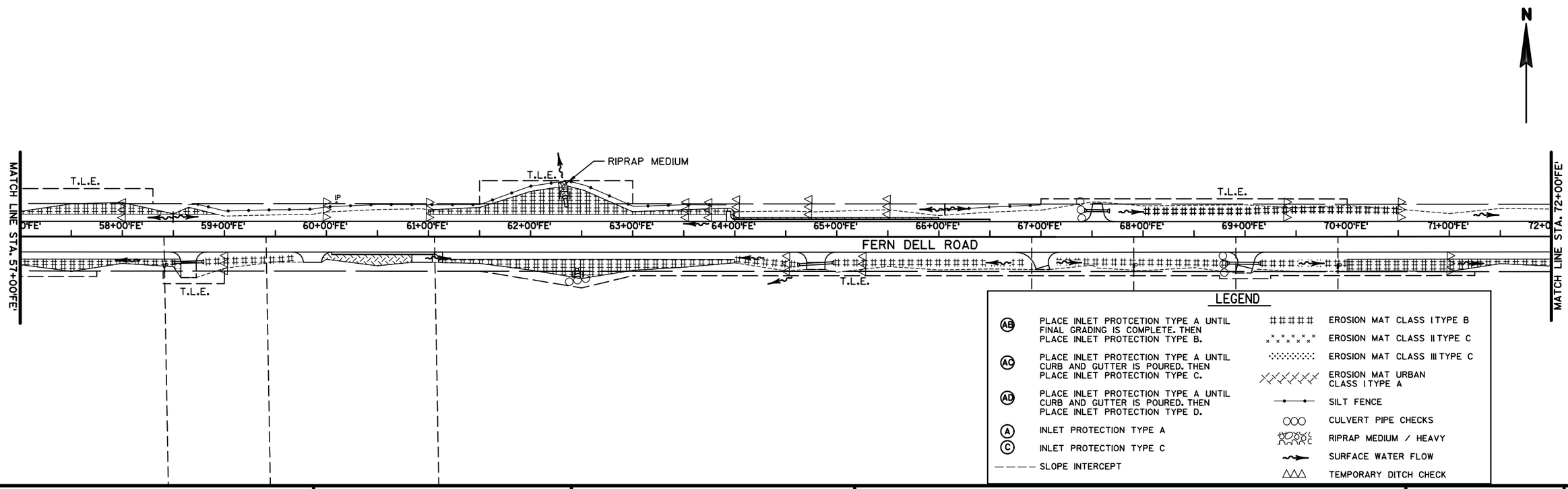

PROJECT NO: 1674-00-70	HWY: US 12	COUNTY: SAUK	EROSION CONTROL: FERN DELL ROAD	SHEET 25	E

FILE NAME : S:\MAD\1000--1099\1089\150\Micros\Design\Ishnala Bikepath\Plan\022001_ec.dgn PLOT DATE : 11/26/2013 PLOT BY : _username_ PLOT NAME : PLOT SCALE : $$.....plotscale.....$$

WISDOT/CADDS SHEET 42

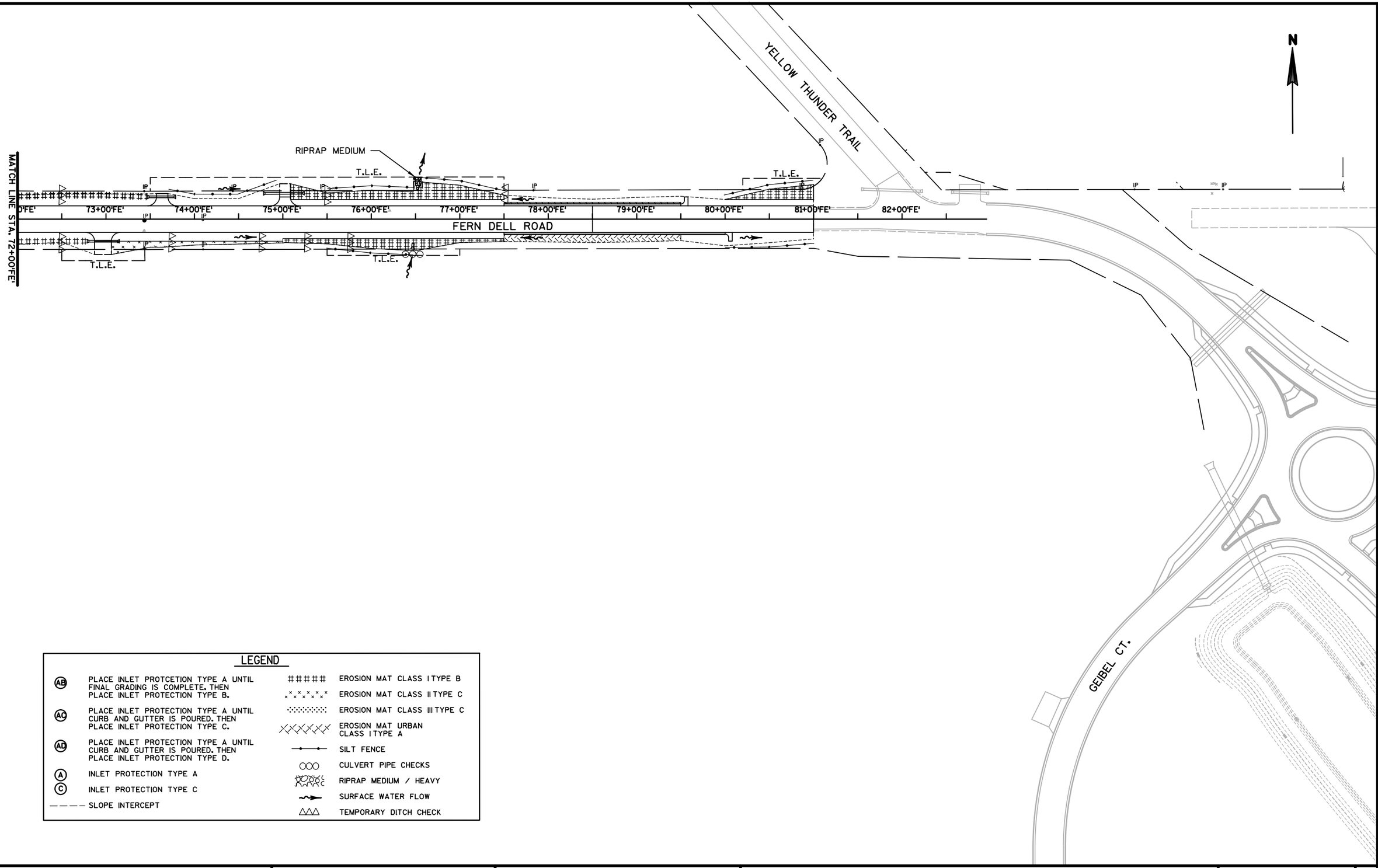

LEGEND

- (AB) PLACE INLET PROTCETION TYPE A UNTIL FINAL GRADING IS COMPLETE. THEN PLACE INLET PROTECTION TYPE B.
- (AC) PLACE INLET PROTECTION TYPE A UNTIL CURB AND GUTTER IS POURED. THEN PLACE INLET PROTECTION TYPE C.
- (AD) PLACE INLET PROTECTION TYPE A UNTIL CURB AND GUTTER IS POURED. THEN PLACE INLET PROTECTION TYPE D.
- (A) INLET PROTECTION TYPE A
- (C) INLET PROTECTION TYPE C
- SLOPE INTERCEPT
- EROSION MAT CLASS I TYPE B
- EROSION MAT CLASS II TYPE C
- EROSION MAT CLASS III TYPE C
- EROSION MAT URBAN CLASS I TYPE A
- SILT FENCE
- CULVERT PIPE CHECKS
- RIPRAP MEDIUM / HEAVY
- SURFACE WATER FLOW
- TEMPORARY DITCH CHECK

PROJECT NO: 1674-00-70	HWY: US 12	COUNTY: SAUK	EROSION CONTROL: FERN DELL ROAD	SHEET 26	E

2

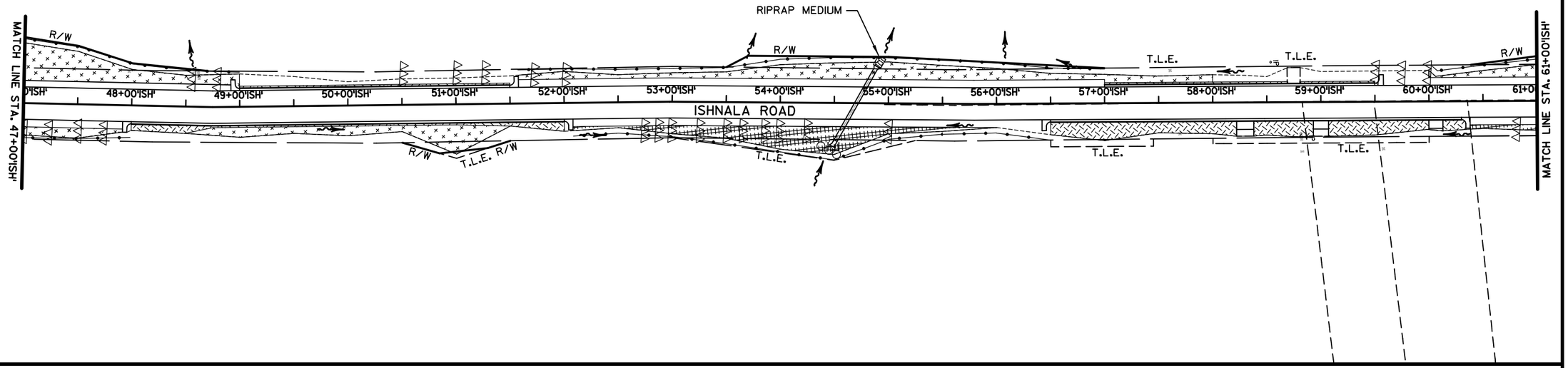

LEGEND

(AB) PLACE INLET PROTCETION TYPE A UNTIL FINAL GRADING IS COMPLETE. THEN PLACE INLET PROTECTION TYPE B.	##### EROSION MAT CLASS I TYPE B
(AC) PLACE INLET PROTECTION TYPE A UNTIL CURB AND GUTTER IS POURED. THEN PLACE INLET PROTECTION TYPE C.	EROSION MAT CLASS II TYPE C
(AD) PLACE INLET PROTECTION TYPE A UNTIL CURB AND GUTTER IS POURED. THEN PLACE INLET PROTECTION TYPE D.	EROSION MAT CLASS III TYPE C
(A) INLET PROTECTION TYPE A	EROSION MAT URBAN CLASS I TYPE A
(C) INLET PROTECTION TYPE C	SILT FENCE
SLOPE INTERCEPT	CULVERT PIPE CHECKS
	RIPRAP MEDIUM / HEAVY
	SURFACE WATER FLOW
	TEMPORARY DITCH CHECK

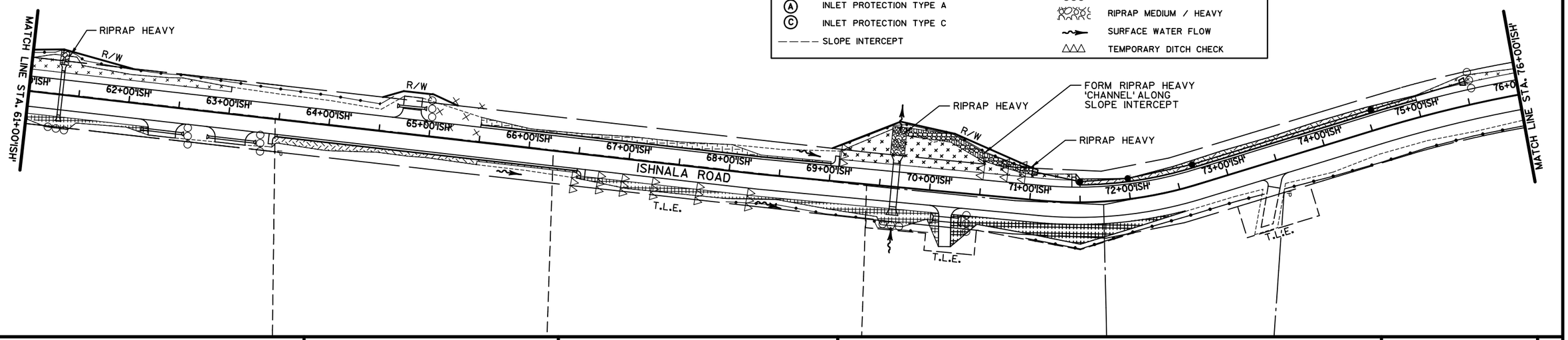

PROJECT NO: 1674-00-70	HWY: US 12	COUNTY: SAUK	EROSION CONTROL: ISHNALA ROAD	SHEET	E

FILE NAME : S:\MAD\1000--1099\1089\150\Micros\Design\Ishnala Bikepath\Plan\022003_ec.dgn PLOT DATE : 11/26/2013 PLOT BY : _username_ PLOT NAME : PLOT SCALE : $$.....plotscale.....$$ WISDOT/CADDS SHEET 42

2

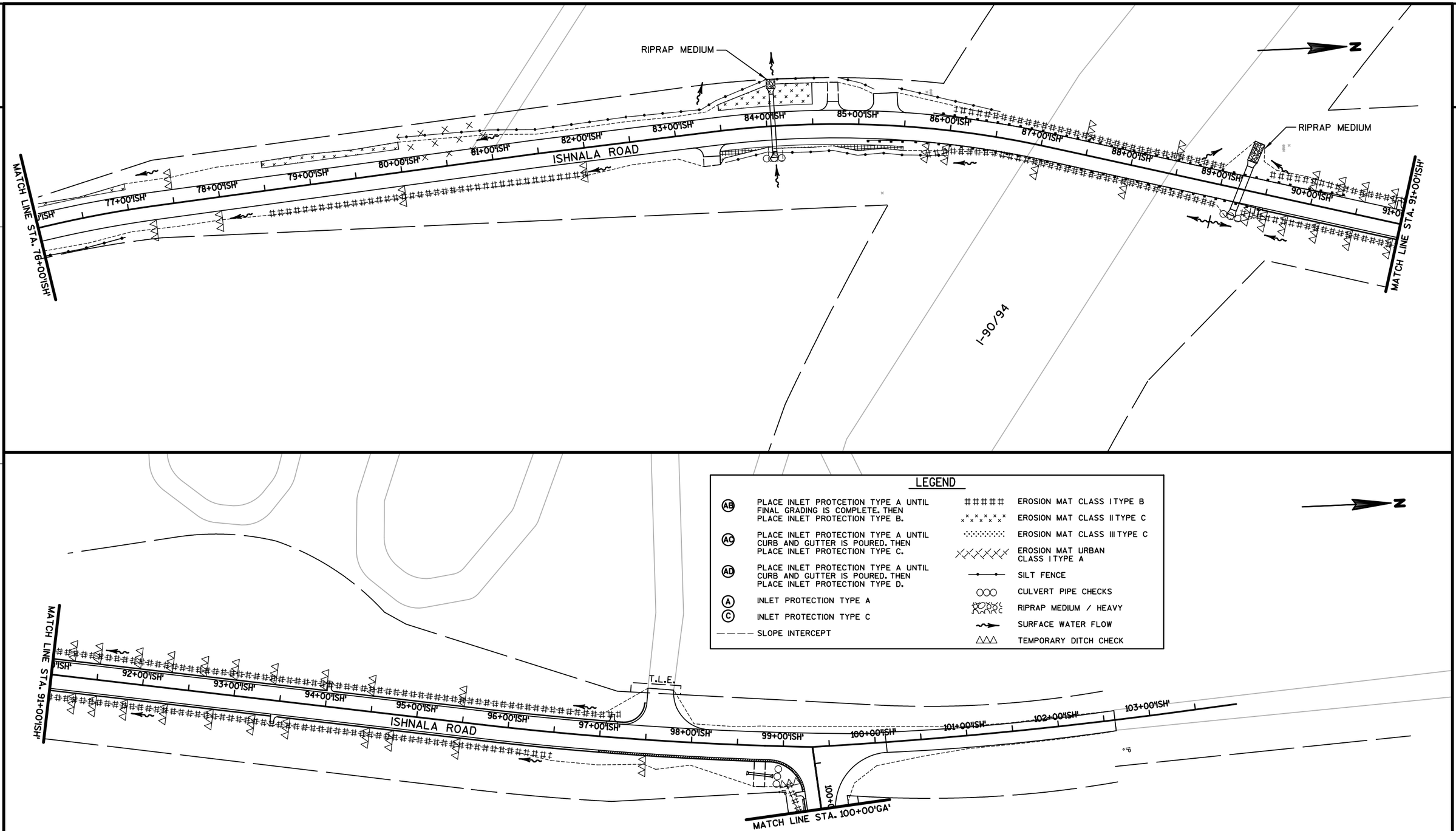

PROJECT NO: 1674-00-70	HWY: US 12	COUNTY: SAUK	EROSION CONTROL: ISHNALA ROAD	SHEET	E

FILE NAME : S:\MAD\1000--1099\1089\150\Micros\Design\Ishnala Bikepath\Plan\022004_ec.dgn PLOT DATE : 11/26/2013 PLOT BY : _username_ PLOT NAME : PLOT SCALE : $$.....plotscale.....$$ WISDOT/CADDS SHEET 42

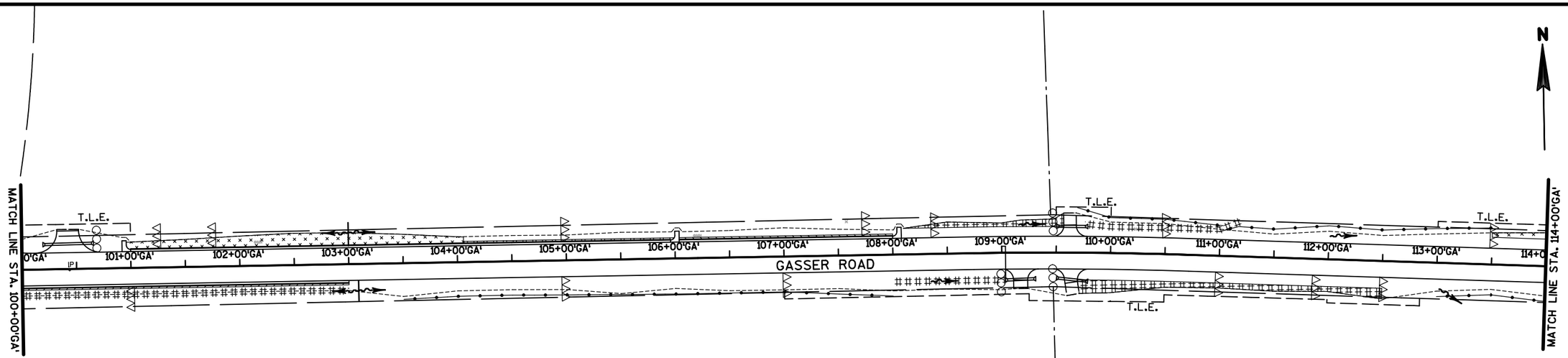

2

LEGEND

- (AB) PLACE INLET PROTCETION TYPE A UNTIL FINAL GRADING IS COMPLETE. THEN PLACE INLET PROTECTION TYPE B.
- (AC) PLACE INLET PROTECTION TYPE A UNTIL CURB AND GUTTER IS POURED. THEN PLACE INLET PROTECTION TYPE C.
- (AD) PLACE INLET PROTECTION TYPE A UNTIL CURB AND GUTTER IS POURED. THEN PLACE INLET PROTECTION TYPE D.
- (A) INLET PROTECTION TYPE A
- (C) INLET PROTECTION TYPE C
- SLOPE INTERCEPT
- EROSION MAT CLASS I TYPE B
- EROSION MAT CLASS II TYPE C
- EROSION MAT CLASS III TYPE C
- EROSION MAT URBAN CLASS I TYPE A
- SILT FENCE
- CULVERT PIPE CHECKS
- RIPRAP MEDIUM / HEAVY
- SURFACE WATER FLOW
- TEMPORARY DITCH CHECK

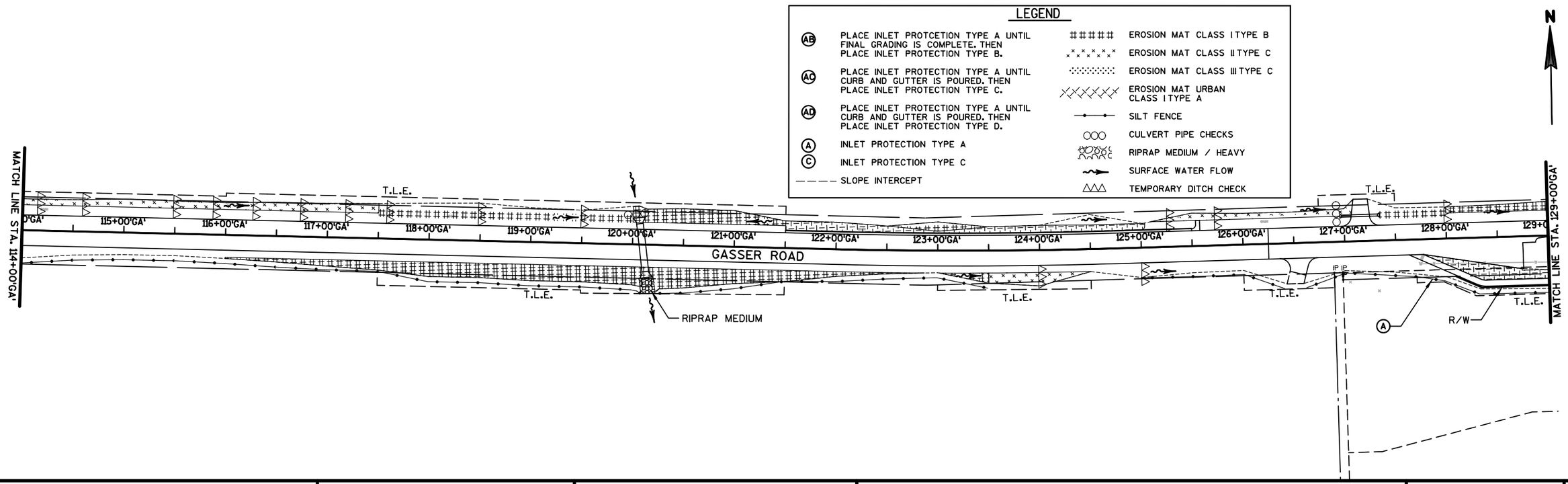

PROJECT NO: 1674-00-70	HWY: US 12	COUNTY: SAUK	EROSION CONTROL: GASSER ROAD	SHEET	E

FILE NAME : S:\MAD\1000--1099\1089\150\Micros\Design\Ishnala Bikepath\Plan\022005_ec.dgn PLOT DATE : 11/26/2013 PLOT BY : _username_ PLOT NAME : PLOT SCALE : $$.....plotscale.....$$

WISDOT/CADDS SHEET 42

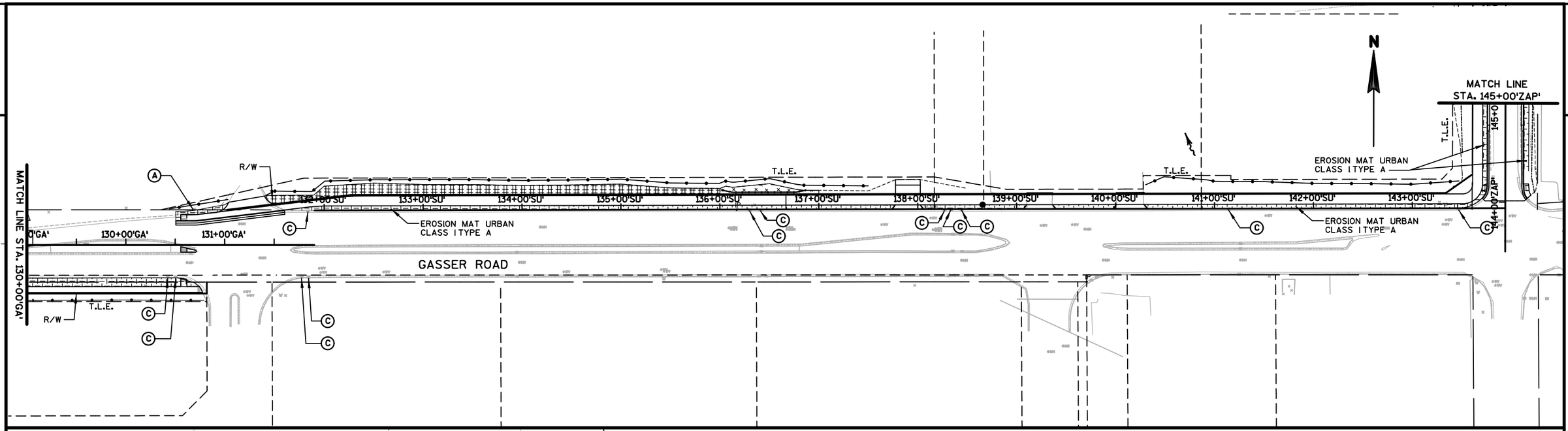

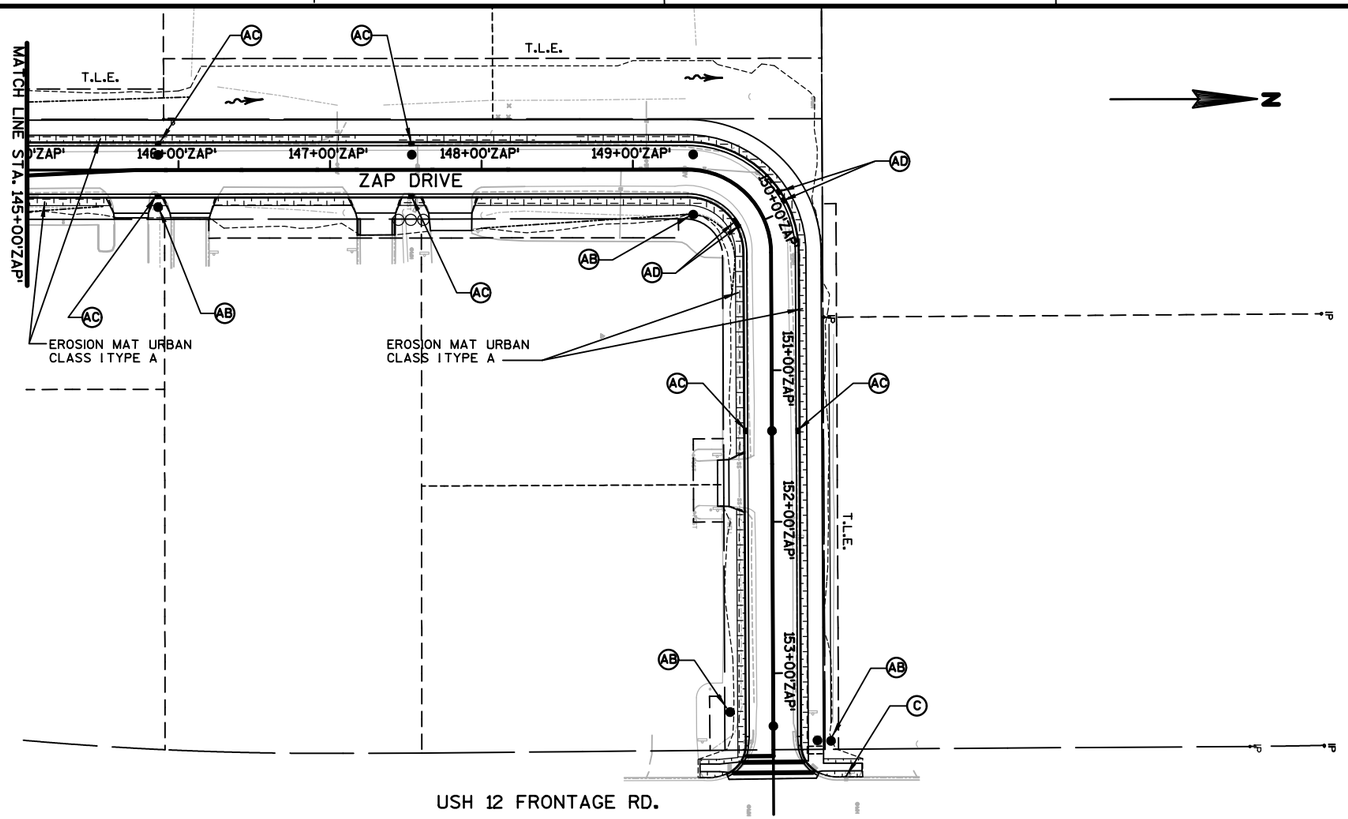

LEGEND

- (AB) PLACE INLET PROTCETION TYPE A UNTIL FINAL GRADING IS COMPLETE. THEN PLACE INLET PROTECTION TYPE B.
- (AC) PLACE INLET PROTECTION TYPE A UNTIL CURB AND GUTTER IS POURED. THEN PLACE INLET PROTECTION TYPE C.
- (AD) PLACE INLET PROTECTION TYPE A UNTIL CURB AND GUTTER IS POURED. THEN PLACE INLET PROTECTION TYPE D.
- (A) INLET PROTECTION TYPE A
- (C) INLET PROTECTION TYPE C
- SLOPE INTERCEPT
- EROSION MAT CLASS I TYPE B
- EROSION MAT CLASS II TYPE C
- EROSION MAT CLASS III TYPE C
- EROSION MAT URBAN CLASS I TYPE A
- SILT FENCE
- CULVERT PIPE CHECKS
- RIPRAP MEDIUM / HEAVY
- SURFACE WATER FLOW
- TEMPORARY DITCH CHECK

PROJECT NO: 1674-00-70	HWY: US 12	COUNTY: SAUK	EROSION CONTROL: GASSER ROAD AND ZAP DRIVE	SHEET 30	E

2

N

0 60 120

LEGEND

- (AB) PLACE INLET PROTCETION TYPE A UNTIL FINAL GRADING IS COMPLETE. THEN PLACE INLET PROTECTION TYPE B.
- (AC) PLACE INLET PROTECTION TYPE A UNTIL CURB AND GUTTER IS POURED. THEN PLACE INLET PROTECTION TYPE C.
- (AD) PLACE INLET PROTECTION TYPE A UNTIL CURB AND GUTTER IS POURED. THEN PLACE INLET PROTECTION TYPE D.
- (A) INLET PROTECTION TYPE A
- (C) INLET PROTECTION TYPE C
- SLOPE INTERCEPT
- EROSION MAT CLASS I TYPE B
- EROSION MAT CLASS II TYPE C
- EROSION MAT CLASS III TYPE C
- EROSION MAT URBAN CLASS I TYPE A
- SILT FENCE
- CULVERT PIPE CHECKS
- RIPRAP MEDIUM / HEAVY
- SURFACE WATER FLOW
- TEMPORARY DITCH CHECK

EXISTING POND

INFILTRATION BASIN

INFILTRATION BASIN

FERN DELL ROAD

GEIBEL COURT

EROSION MAT CLASS I TYPE B

EROSION MAT CLASS III TYPE C

SILT FENCE

PROJECT NO: 1674-00-70	HWY: US 12	COUNTY: SAUK	EROSION CONTROL: INFILTRATION BASIN	SHEET	E

FILE NAME : S:\MAD\1000--1099\1089\150\Micros\Design\Ishnala Bikepath\Plan\022007_ec.dgn PLOT DATE : 11/26/2013 PLOT BY : _username_ PLOT NAME : PLOT SCALE : $$.....plotscale.....$$

N

0 60 120

SEEDING MIXTURE NO. 20

SEEDING MIXTURE NO. 75

EXISTING POND

SEEDING MIXTURE NO. 20

GEIBEL COURT

FERN DELL ROAD

LEGEND

SEEDING MIXTURE NO. 20

SEEDING MIXTURE NO. 75

PROJECT NO: 1674-00-72	HWY: USH 12	COUNTY: SAUK	EROSION CONTROL: PERMANENT SEEDING INFILTRATION BASIN	SHEET 32 E

FILE NAME : S:\MAD\1000--1099\1089\150\Micros\Design\Ishnala Bikepath\Plan\022008_ec.dgn PLOT DATE : 11/26/2013 PLOT BY : _username_ PLOT NAME : PLOT SCALE : $$.....plotscale.....$$

WISDOT/CADDS SHEET 42

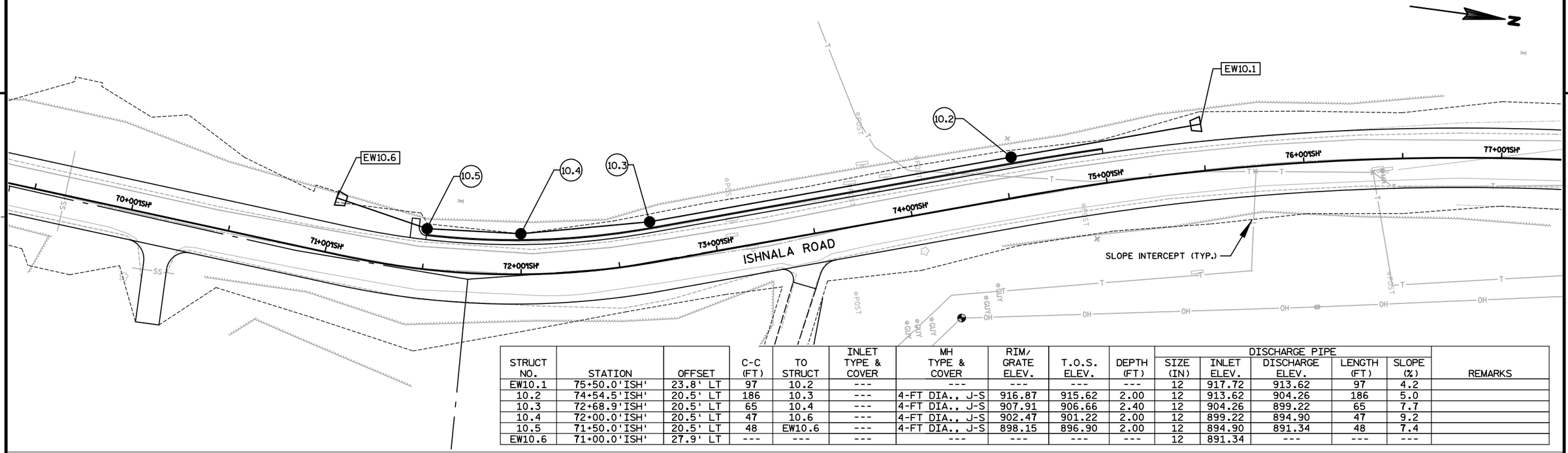

STRUCT NO.	STATION	OFFSET	C-C (FT)	TO STRUCT	INLET TYPE & COVER	MH TYPE & COVER	RIM/ GRATE ELEV.	T.O.S. ELEV.	DEPTH (FT)	DISCHARGE PIPE SIZE (IN)	DISCHARGE PIPE INLET ELEV.	DISCHARGE PIPE DISCHARGE ELEV.	DISCHARGE PIPE LENGTH (FT)	DISCHARGE PIPE SLOPE (%)	REMARKS
EW10.1	75+50.0'ISH'	23.8' LT	97	10.2	---	---	---	---	---	12	917.72	913.62	97	4.2	
10.2	74+54.5'ISH'	20.5' LT	186	10.3	---	4-FT DIA., J-S	916.87	915.62	2.00	12	913.62	904.26	186	5.0	
10.3	72+68.9'ISH'	20.5' LT	65	10.4	---	4-FT DIA., J-S	907.91	906.66	2.40	12	904.26	899.22	65	7.7	
10.4	72+00.0'ISH'	20.5' LT	47	10.6	---	4-FT DIA., J-S	902.47	901.22	2.00	12	899.22	894.90	47	9.2	
10.5	71+50.0'ISH'	20.5' LT	48	EW10.6	---	4-FT DIA., J-S	898.15	896.90	2.00	12	894.90	891.34	48	7.4	
EW10.6	71+00.0'ISH'	27.9' LT	---	---	---	---	---	---	---	12	891.34	---	---	---	

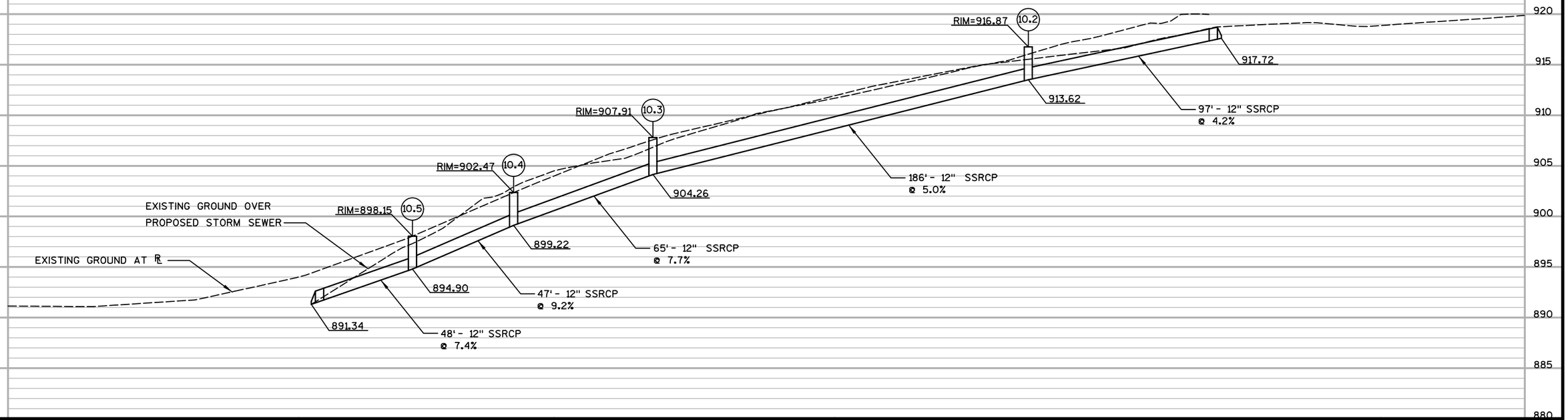

PROJECT NO: 1674-00-70	HWY: US 12	COUNTY: SAUK	STORM SEWER: ISHNALA ROAD	SHEET

FILE NAME : S:\MAD\1000--1099\1089\150\Micros\Design\Ishnala Bikepath\Plan\022501_ss.dgn PLOT DATE : 11/26/2013 PLOT BY : _username_ PLOT NAME : PLOT SCALE : $$.....plotscale.....$$ WISDOT/CADDS SHEET 41

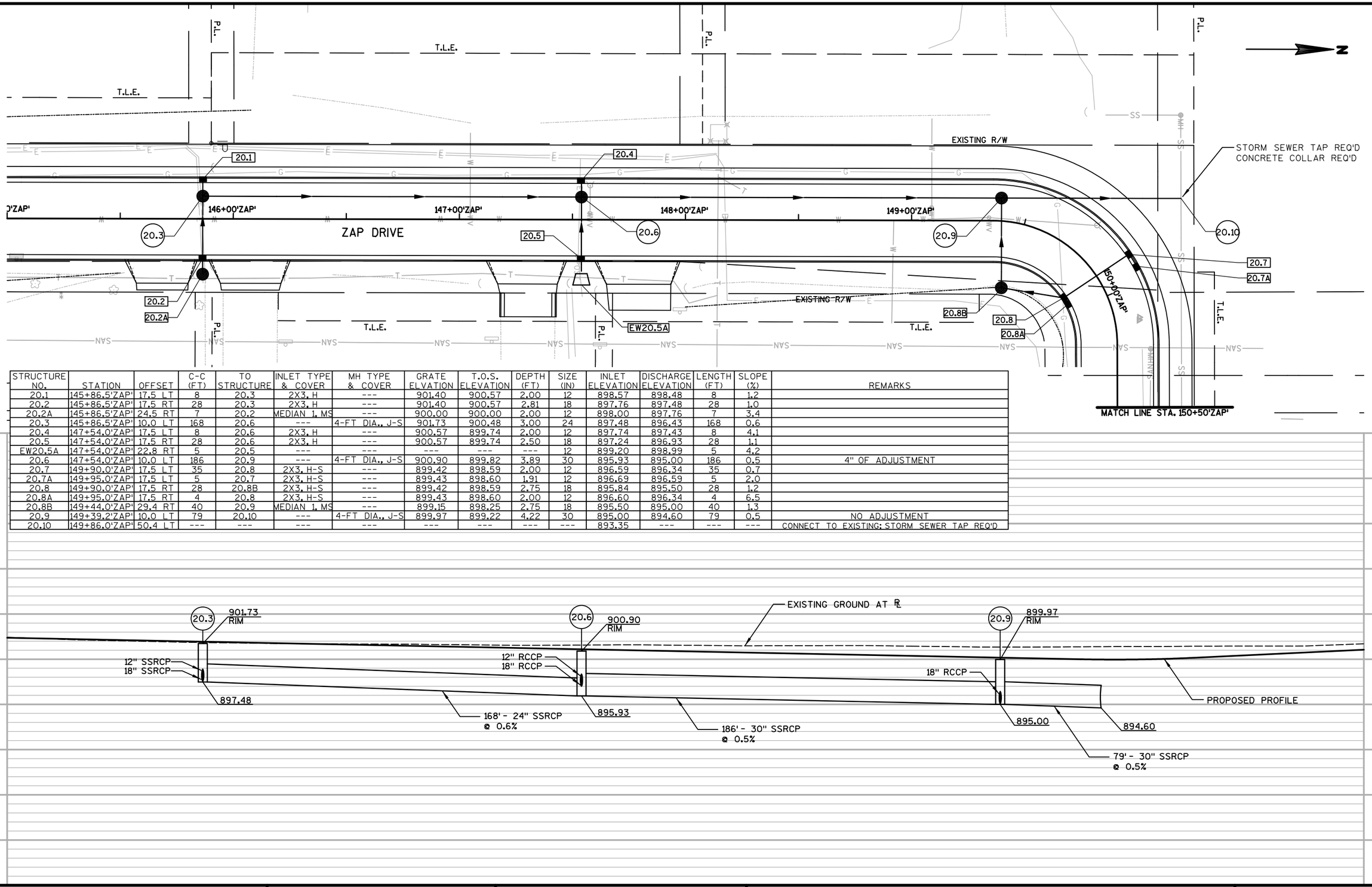

STRUCTURE NO.	STATION	OFFSET	C-C (FT)	TO STRUCTURE	INLET TYPE & COVER	MH TYPE & COVER	GRATE ELVATION	T.O.S. ELEVATION	DEPTH (FT)	SIZE (IN)	INLET ELEVATION	DISCHARGE ELEVATION	LENGTH (FT)	SLOPE (%)	REMARKS
20.1	145+86.5'ZAP'	17.5 LT	8	20.3	2X3, H	---	901.40	900.57	2.00	12	898.57	898.48	8	1.2	
20.2	145+86.5'ZAP'	17.5 RT	28	20.3	2X3, H	---	901.40	900.57	2.81	18	897.76	897.48	28	1.0	
20.2A	145+86.5'ZAP'	24.5 RT	7	20.2	MEDIAN 1, MS	---	900.00	900.00	2.00	12	898.00	897.76	7	3.4	
20.3	145+86.5'ZAP'	10.0 LT	168	20.6	---	4-FT DIA., J-S	901.73	900.48	3.00	24	897.48	896.43	168	0.6	
20.4	147+54.0'ZAP'	17.5 LT	8	20.6	2X3, H	---	900.57	899.74	2.00	12	897.74	897.43	8	4.1	
20.5	147+54.0'ZAP'	17.5 RT	28	20.6	2X3, H	---	900.57	899.74	2.50	18	897.24	896.93	28	1.1	
EW20.5A	147+54.0'ZAP'	22.8 RT	5	20.5	---	---	---	---	---	12	899.20	898.99	5	4.2	
20.6	147+54.0'ZAP'	10.0 LT	186	20.9	---	4-FT DIA., J-S	900.90	899.82	3.89	30	895.93	895.00	186	0.5	4" OF ADJUSTMENT
20.7	149+90.0'ZAP'	17.5 LT	35	20.8	2X3, H-S	---	899.42	898.59	2.00	12	896.59	896.34	35	0.7	
20.7A	149+95.0'ZAP'	17.5 LT	5	20.7	2X3, H-S	---	899.43	898.60	1.91	12	896.69	896.59	5	2.0	
20.8	149+90.0'ZAP'	17.5 RT	28	20.8B	2X3, H-S	---	899.42	898.59	2.75	18	895.84	895.50	28	1.2	
20.8A	149+95.0'ZAP'	17.5 RT	4	20.8	2X3, H-S	---	899.43	898.60	2.00	12	896.60	896.34	4	6.5	
20.8B	149+44.0'ZAP'	29.4 RT	40	20.9	MEDIAN 1, MS	---	899.15	898.25	2.75	18	895.50	895.00	40	1.3	
20.9	149+39.2'ZAP'	10.0 LT	79	20.10	---	4-FT DIA., J-S	899.97	899.22	4.22	30	895.00	894.60	79	0.5	NO ADJUSTMENT
20.10	149+86.0'ZAP'	50.4 LT	---	---	---	---	---	---	---	---	893.35	---	---	---	CONNECT TO EXISTING; STORM SEWER TAP REQ'D

PROJECT NO: 1674-00-70	HWY: USH 12	COUNTY: SAUK	STORM SEWER: ZAP DRIVE	SHEET 34	E

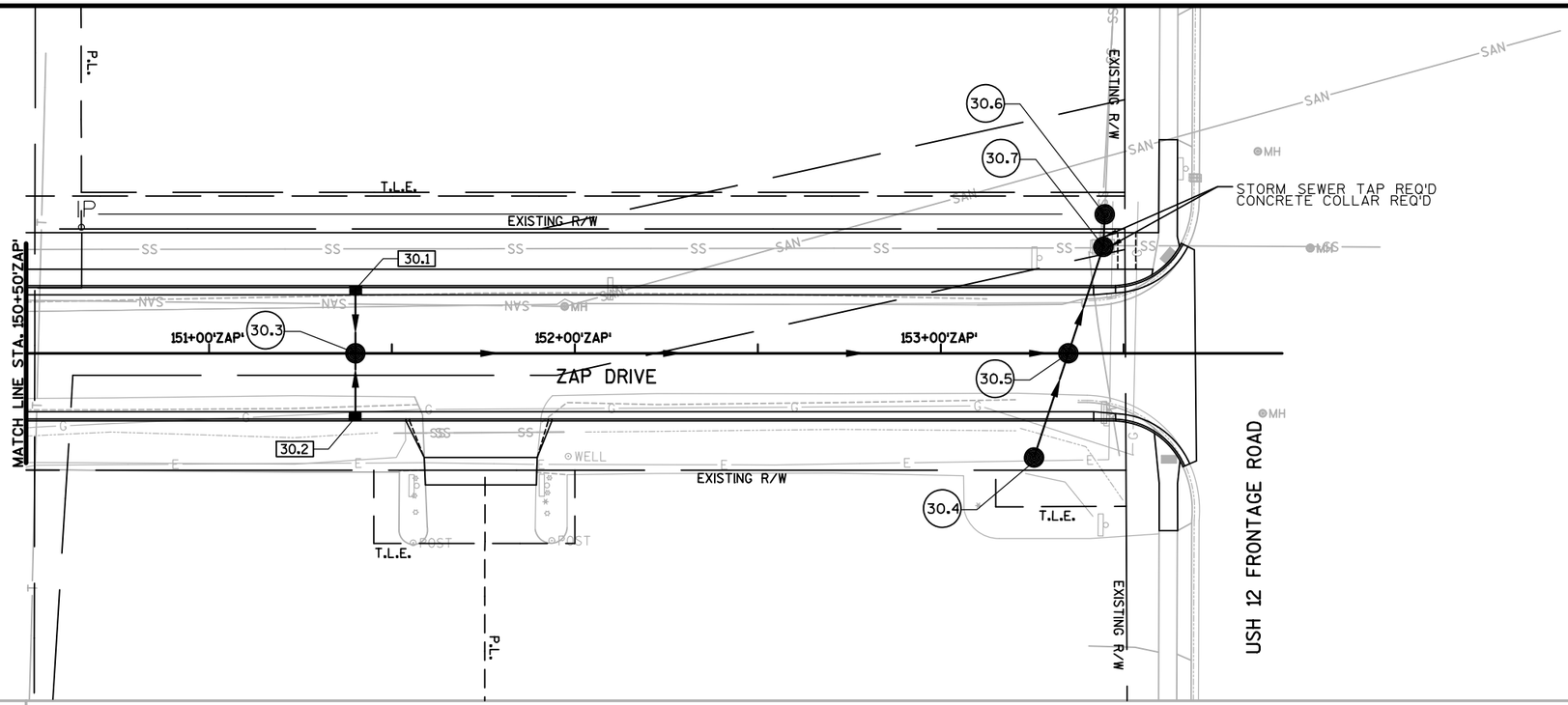

STRUCTURE NO.	STATION	OFFSET	C-C (FT)	TO STRUCTURE	INLET TYPE & COVER	MH TYPE & COVER	GRATE ELVATION	T.O.S. ELEVATION	DEPTH (FT)	SIZE (IN)	INLET ELEVATION	DISCHARGE ELEVATION	LENGTH (FT)	SLOPE (%)	REMARKS
30.1	151+40.0'ZAP'	17.5 LT	18	30.3	2X3, H	---	900.99	900.16	2.08	12	898.08	897.86	18	1.3	
30.2	151+40.0'ZAP'	17.5 RT	18	30.3	2X3, H	---	900.99	900.16	2.08	12	898.08	897.86	18	1.3	
30.3	151+40.0'ZAP'	0.0' RT	195	30.5	---	4-FT DIA., J-S	901.52	900.27	2.91	18	897.36	896.40	195	0.5	
30.4	153+25.5'ZAP'	28.5' RT	30	30.5	---	4-FT DIA., C	902.40	901.15	3.00	12	898.15	896.90	30	4.2	
30.5	153+34.9'ZAP'	0.0' RT	31	30.7	---	4-FT DIA., J-S	903.83	902.58	6.18	18	896.40	896.25	31	0.5	CONNECT TO EXISTING STRUCTURE
30.6*	153+44.8'ZAP'	38.0' LT	9	30.7	MEDIAN 1, MS	---	903.36	903.36	4.50	18	898.86	898.45	9	4.6	SLOPE CASTING AT 6:1; CONNECT TO EXISTING STRUCTURE
30.7	153+44.4'ZAP'	28.8' LT	---	---	---	SPECIAL, J-S	904.30	903.47	---	---	---	---	---	---	INLETS TYPE 9 FLAT SLAB TOP REQ'D; 1" OF ADJUSTMENT; EXISTING STRUCTURE

*STATION AND OFFSET GIVEN TO THE CENTER OF STRUCTURE. GRATE ELEVATION GIVEN TO LOW POINT OF GRATE PER FDM S.D.D. 8C5-2.

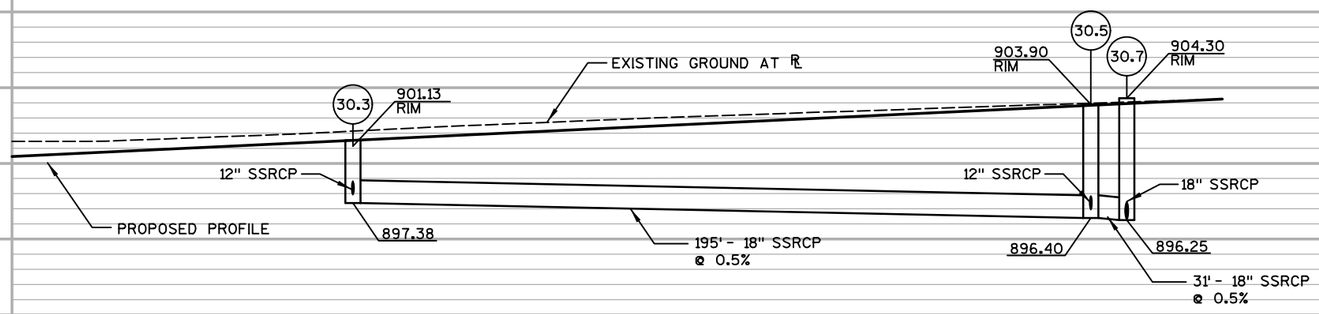

PROJECT NO: 1674-00-70	HWY: USH 12	COUNTY: SAUK	STORM SEWER: ZAP DRIVE	SHEET 35	E

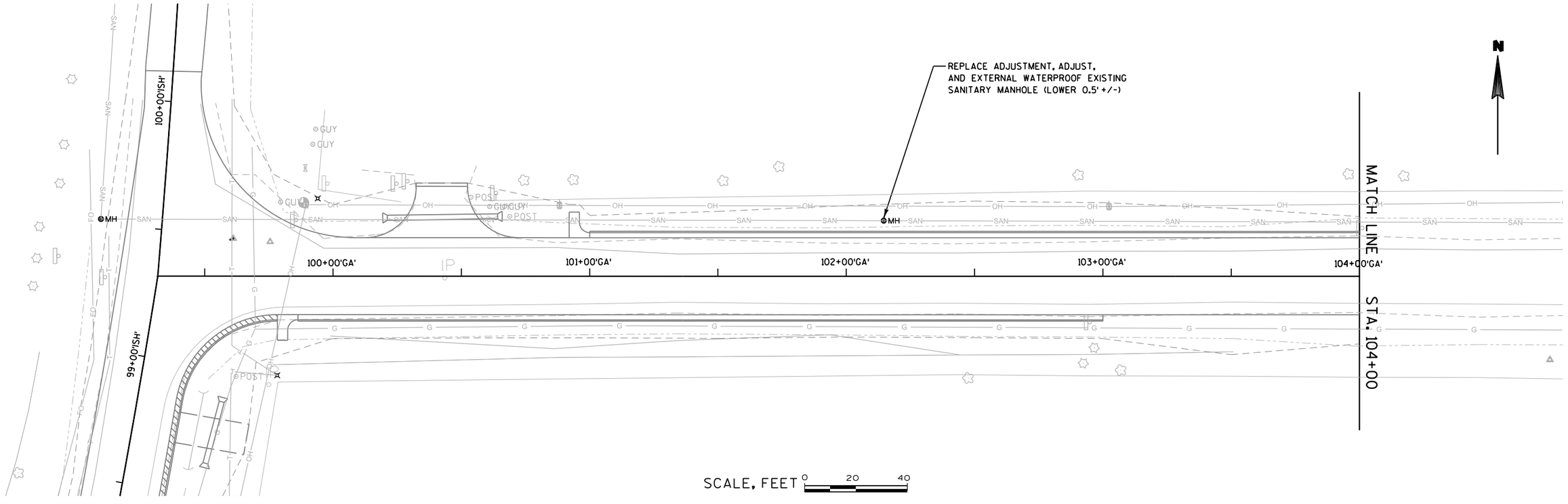

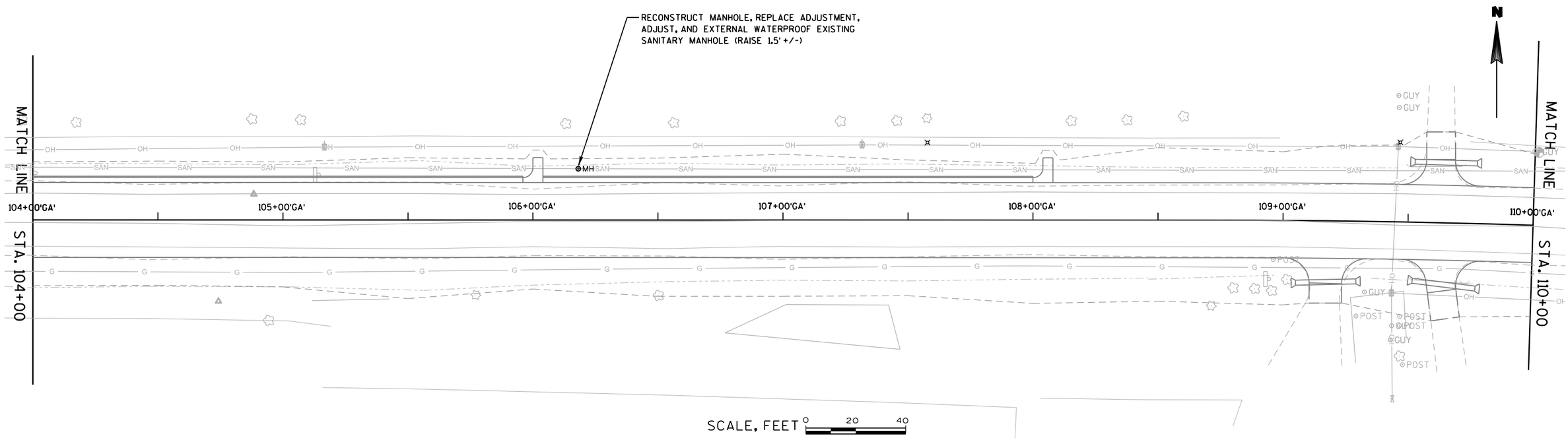

PROJECT NO: 1674-00-70	HWY: USH 12	COUNTY: SAUK	SANITARY SEWER AND WATER MAIN - GASSER ROAD	SHEET 36	E

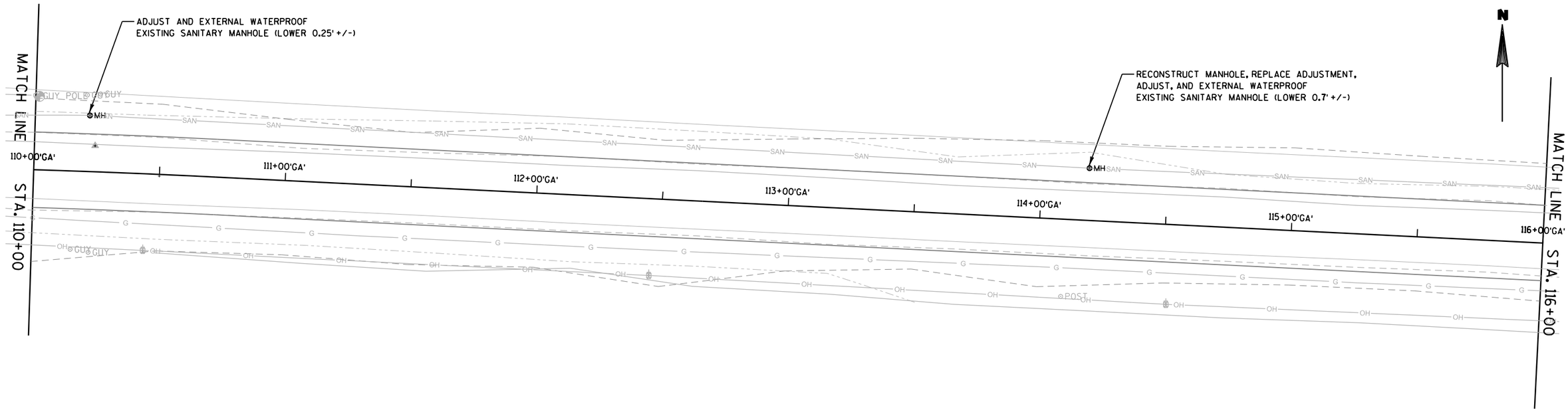

SCALE, FEET 0 20 40

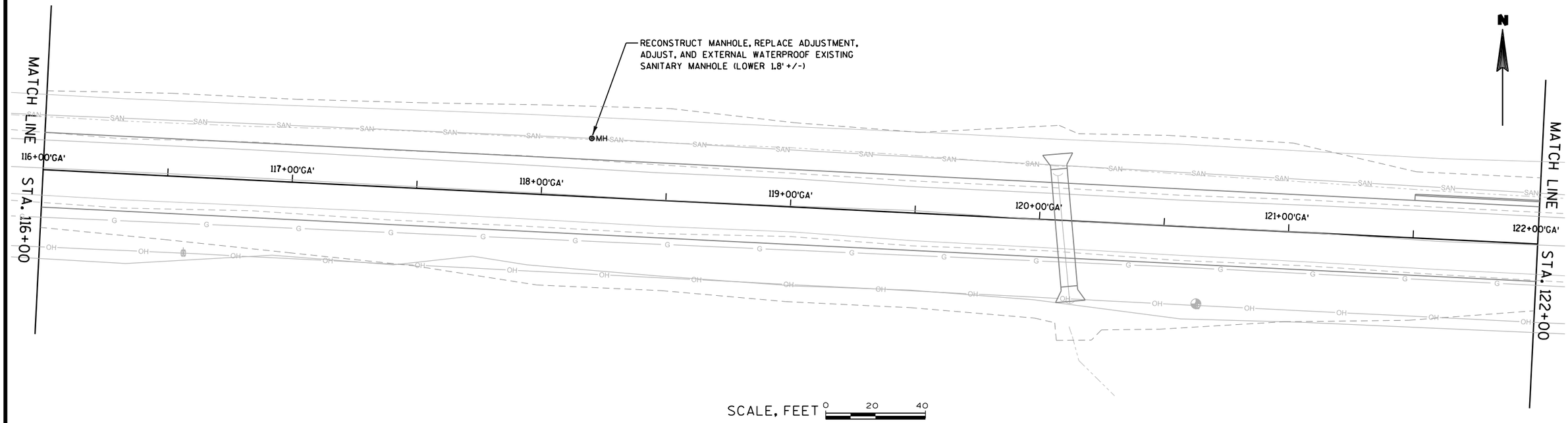

SCALE, FEET 0 20 40

PROJECT NO: 1674-00-70	HWY: USH 12	COUNTY: SAUK	SANITARY SEWER AND WATER MAIN - GASSER ROAD	SHEET 37	E

FILE NAME : $$....designfile....$$
U_02.dgn 12/27/2012 8:56:38 AM rgardner

PLOT DATE : $$...plottingdate...$$ PLOT BY : $$...plotuser...$$ PLOT NAME : PLOT SCALE : $$.....plotscale.....$$

WISDOT/CADDS SHEET 42

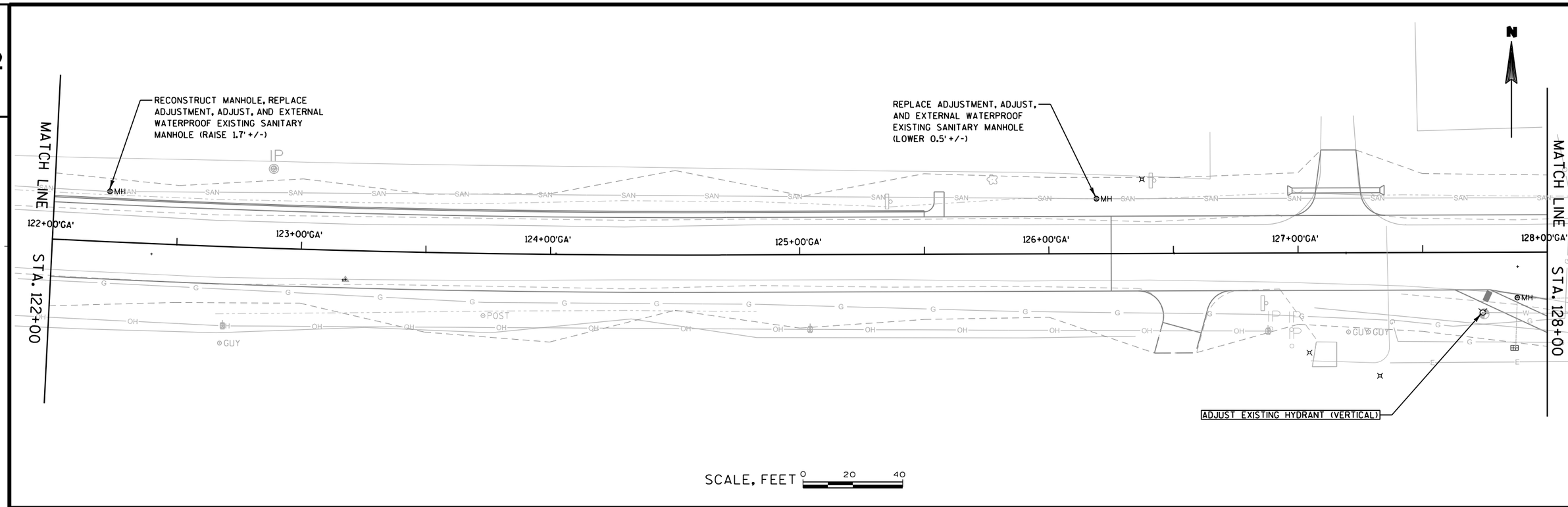

PROJECT NO:1674-00-70	HWY:USH 12	COUNTY:SAUK	SANITARY SEWER AND WATER MAIN - GASSER ROAD	SHEET 38	E

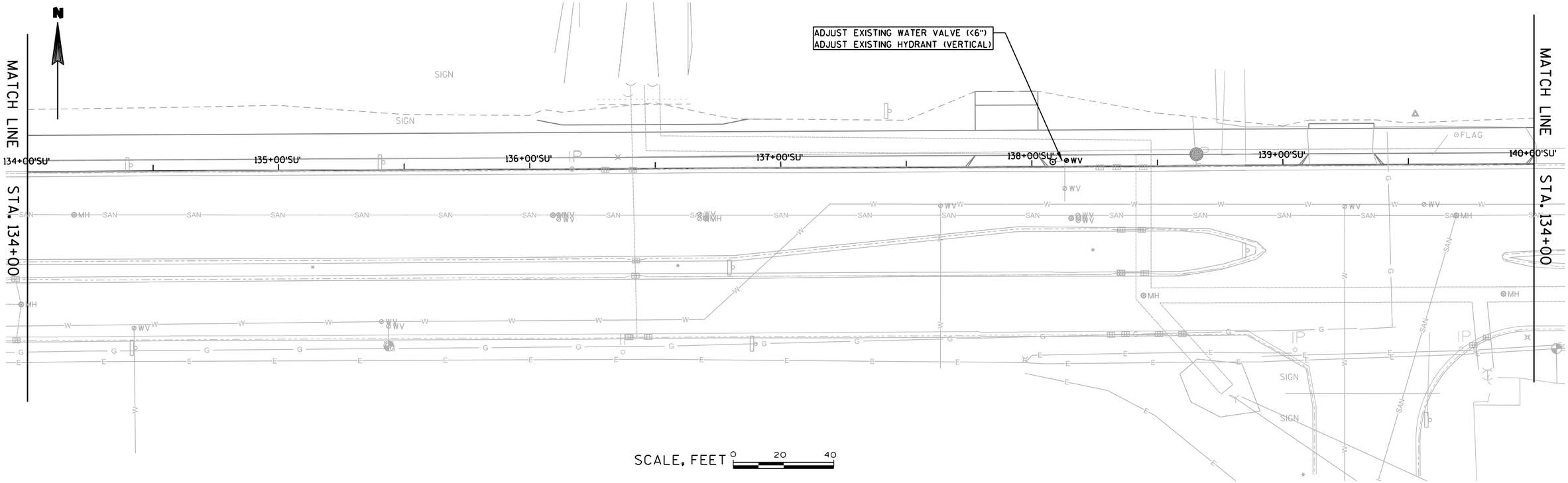

PROJECT NO:1674-00-70	HWY:USH 12	COUNTY:SAUK	SANITARY SEWER AND WATER MAIN - GASSER ROAD	SHEET 39	E

PERFORM ULO AND OFFSET
6" SERVICE IF NECESSARY TO AVOID
STORM SEWER CONFLICT.
20 L.F. - 6" D.I.W.M.
4 - 45-DEGREE BEND, 6-INCH
2- CONNECT TO EXISTING WATER SERVICE

1- REMOVE, SALVAGE, AND RELOCATE EXISTING HYDRANT
1- CONNECT TO EXISTING WATER MAIN
20 L.F. - 6" D.I.W.M.
4 - 45-DEGREE BEND, 6-INCH
OFFSET LEAD UNDER PROPOSED STORM SEWER

RELOCATED HYDRANT
STA. 147+58 'ZAP', 20.75'LT.
F.G. = 901.22 +/-

1- REMOVE, SALVAGE, AND RELOCATE EXISTING HYDRANT
1- CONNECT TO EXISTING WATER MAIN
22 LF - 6" DIWM (PROVIDE MIN. 7' BURY ON NEW PIPING)
76 LF - 8" DIWM (PROVIDE MIN. 7' BURY ON NEW PIPING)
1 - 8"X 6" TEE
1 - 6" VALVE AND BOX
1 - 8" PLUG
2 - 45 DEGREE BEND, 8-INCH

RELOCATED HYDRANT
STA. 149+65 'ZAP', 36.3'LT.
F.G. = 900.25 +/-

PERFORM ULO AND OFFSET
6" SERVICE IF NECESSARY TO AVOID
STORM SEWER CONFLICT.
20 L.F. - 6" D.I.W.M.
4 - 45-DEGREE BEND, 6-INCH
2 - CONNECT TO EXISTING WATER SERVICE

144+00'ZAP' 145+00'ZAP' 146+00'ZAP' 147+00'ZAP' 148+00'ZAP' 149+00'ZAP' 150+00'ZAP'

ADJUST EXISTING WATER VALVE BOX
6-INCHES OR LESS

ADJUST EXISTING WATER VALVE BOX
GREATER THAN 6-INCHES (TYP. OF 3)

NOTES:
F.G. = HYDRANT FLANGE GRADE
▨ = RIGID INSULATION OVER WATER MAIN
IF OFFSETS ARE NOT REQUIRED

RECONSTRUCT MANHOLE, REPLACE ADJUSTMENT,
ADJUST, AND EXTERNAL WATERPROOF EXISTING
SANITARY MANHOLE (LOWER 1.5' +/-)

REPLACE ADJUSTMENT, ADJUST, AND EXTERNAL
WATERPROOF EXISTING SANITARY MANHOLE
(LOWER 0.5' +/-)

SEE WATER MAIN NOTES
IN PLAN VIEW ABOVE

MH MH MH MH MH

150+00'ZAP' 151+00'ZAP' 152+00'ZAP' 153+00'ZAP'

WV WELL POST POST

PROJECT NO: 1674-00-70	HWY: USH 12	COUNTY: SAUK	SANITARY SEWER & WATER MAIN - ZAP DRIVE	SHEET 40	E

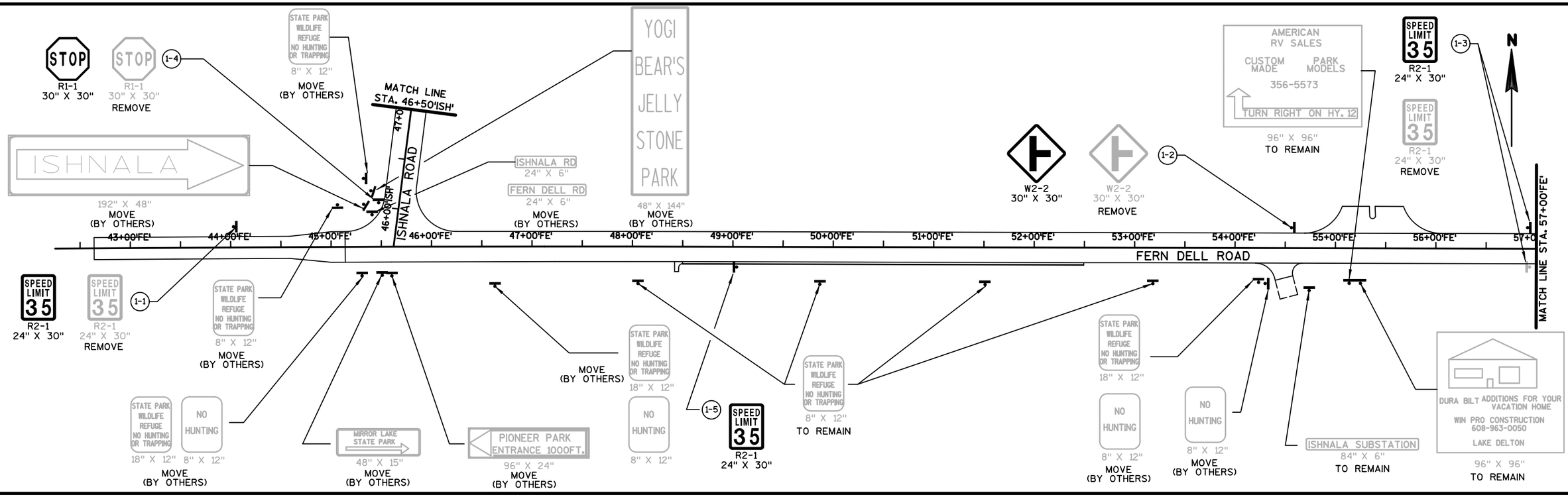

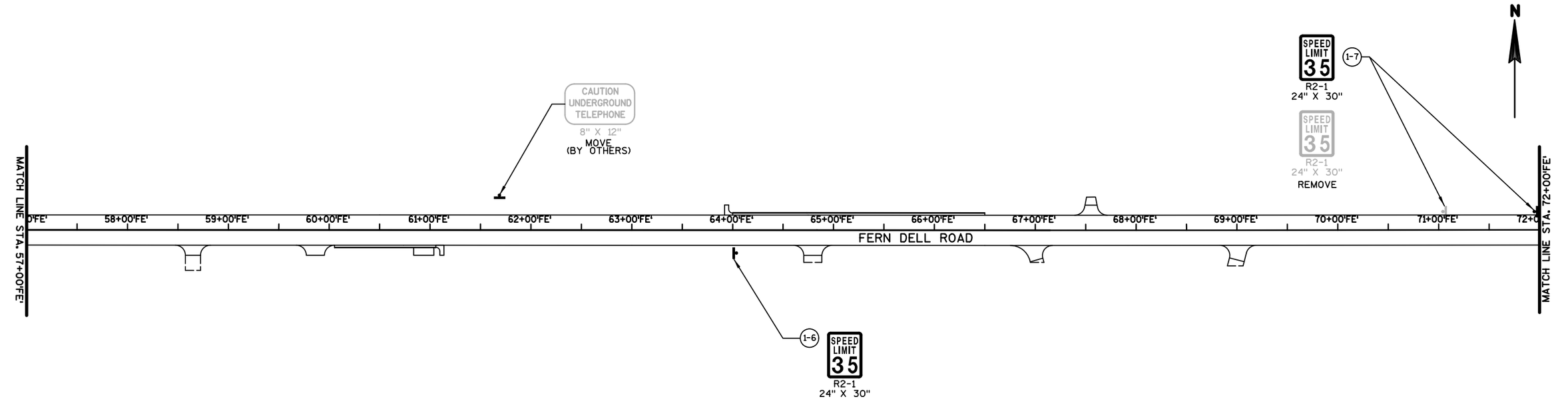

PROJECT NO: 1674-00-70	HWY: US 12	COUNTY: SAUK	PERMANENT SIGNING: FERN DELL ROAD	SHEET	E

FILE NAME : S:\MAD\1000--1099\1089\150\Micros\Design\Ishnala Bikepath\Plan\023201_ps.dgn PLOT DATE : 11/26/2013 PLOT BY : _username_ PLOT NAME : PLOT SCALE : $$.....plotscale.....$$
WISDOT/CADDS SHEET 42

2

N

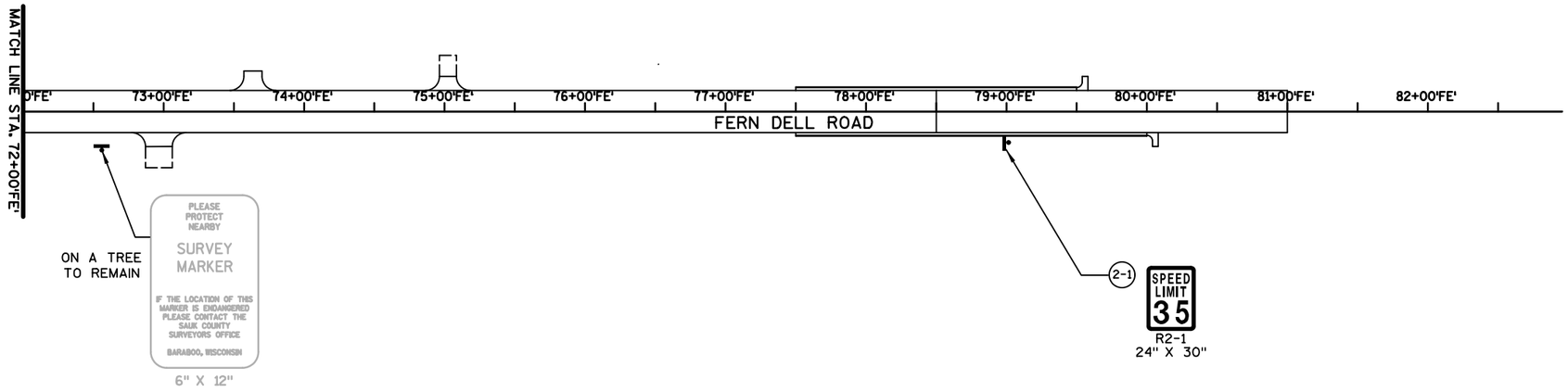

PROJECT NO: 1674-00-70	HWY: US 12	COUNTY: SAUK	PERMANENT SIGNING: FERN DELL ROAD	SHEET 42	E

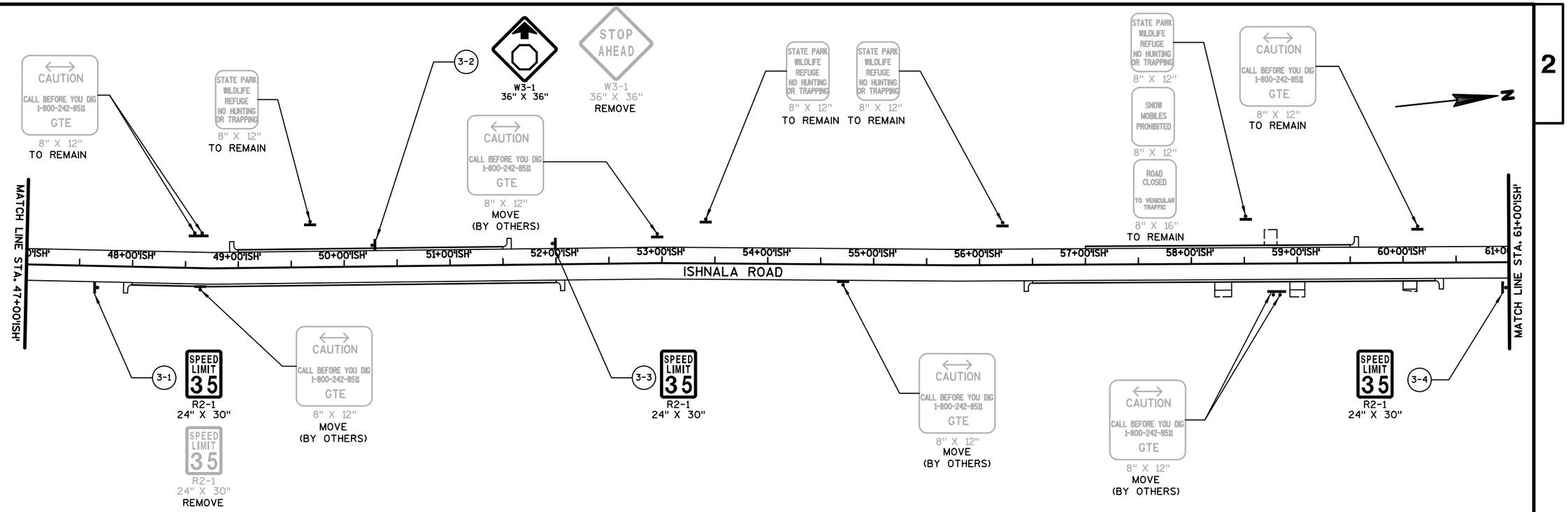

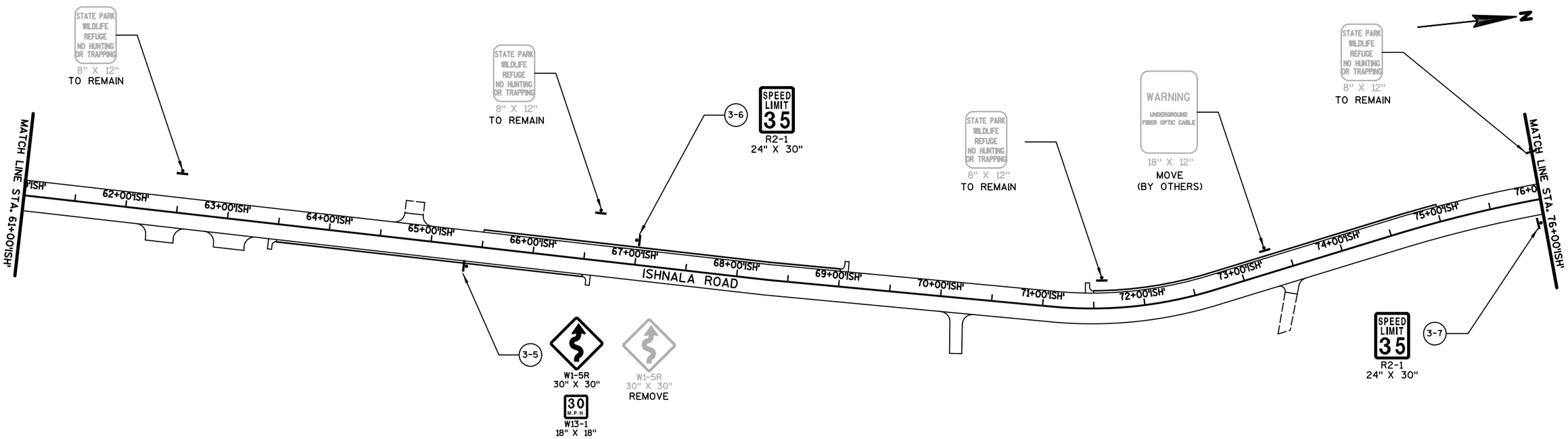

PROJECT NO: 1674-00-70	HWY: US 12	COUNTY: SAUK	PERMANENT SIGNING: ISHNALA ROAD	SHEET 43	E

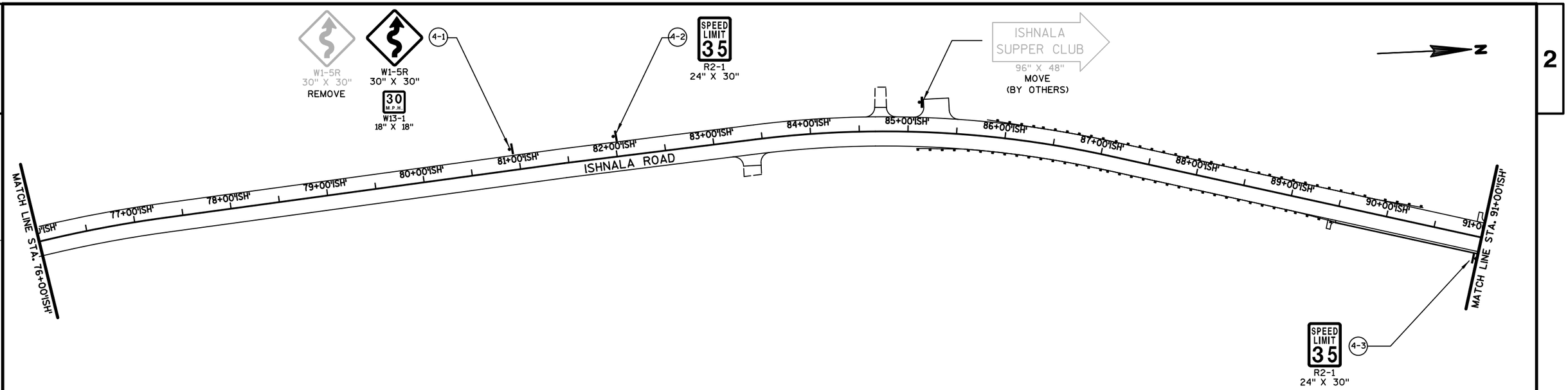

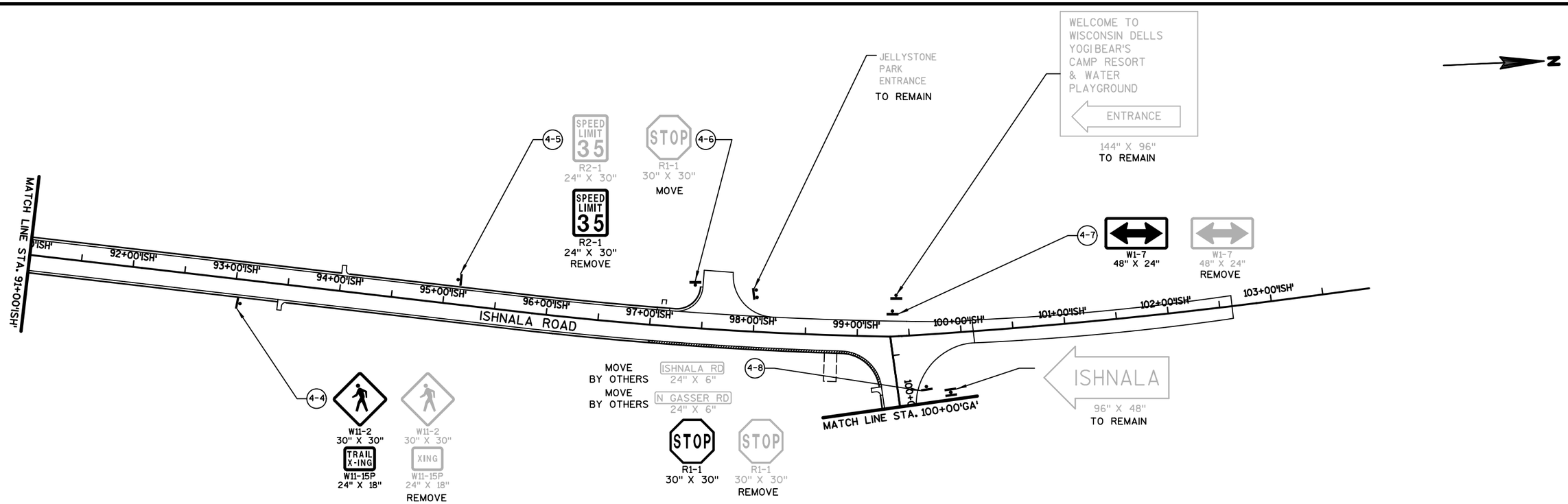

PROJECT NO: 1674-00-70	HWY: US 12	COUNTY: SAUK	PERMANENT SIGNING: ISHNALA ROAD	SHEET 44	E

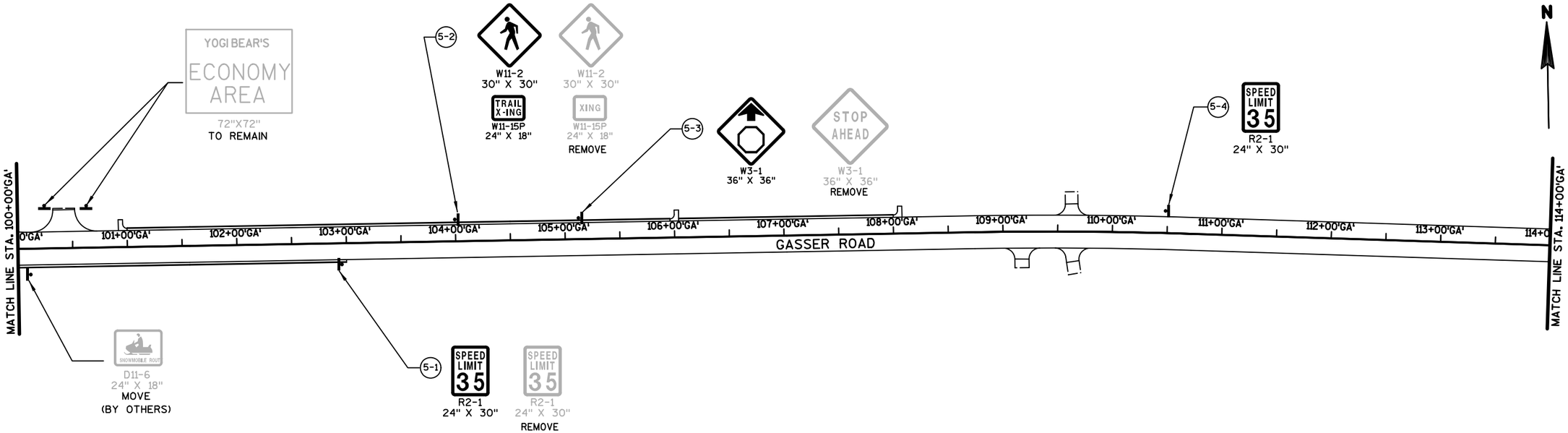

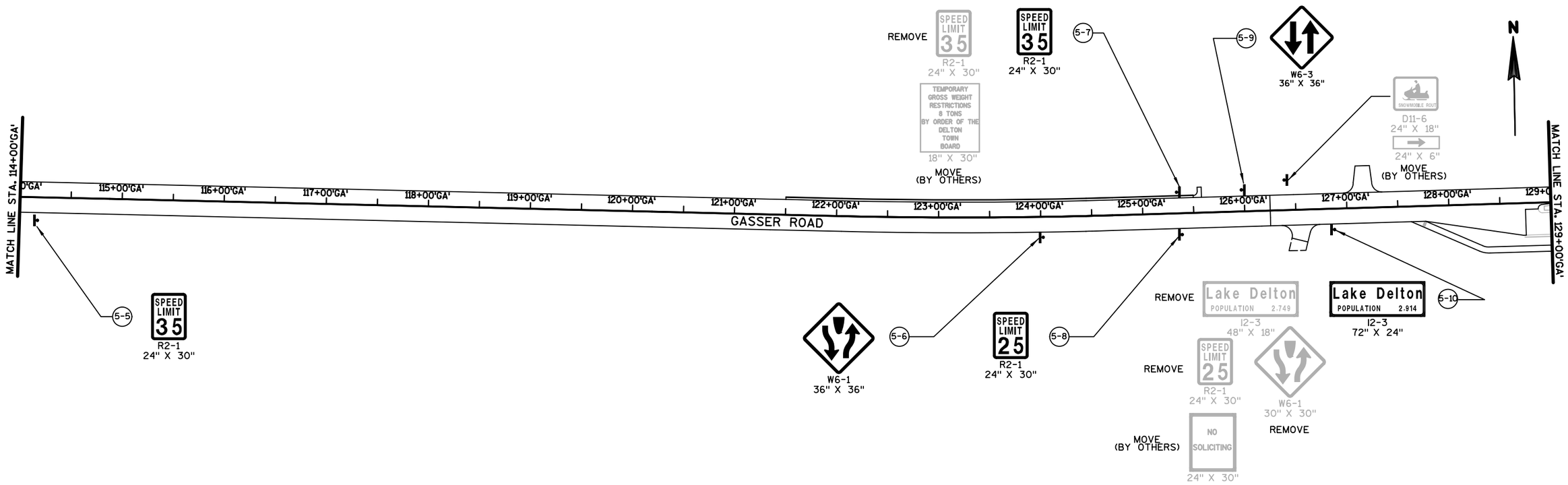

PROJECT NO: 1674-00-70	HWY: US 12	COUNTY: SAUK	PERMANENT SIGNING: GASSER ROAD	SHEET	E

FILE NAME : S:\MAD\1000--1099\1089\150\Micros\Design\Ishnala Bikepath\Plan\023205_ps.dgn PLOT DATE : 11/26/2013 PLOT BY : _username_ PLOT NAME : PLOT SCALE : $$.....plotscale.....$$ WISDOT/CADDS SHEET 42

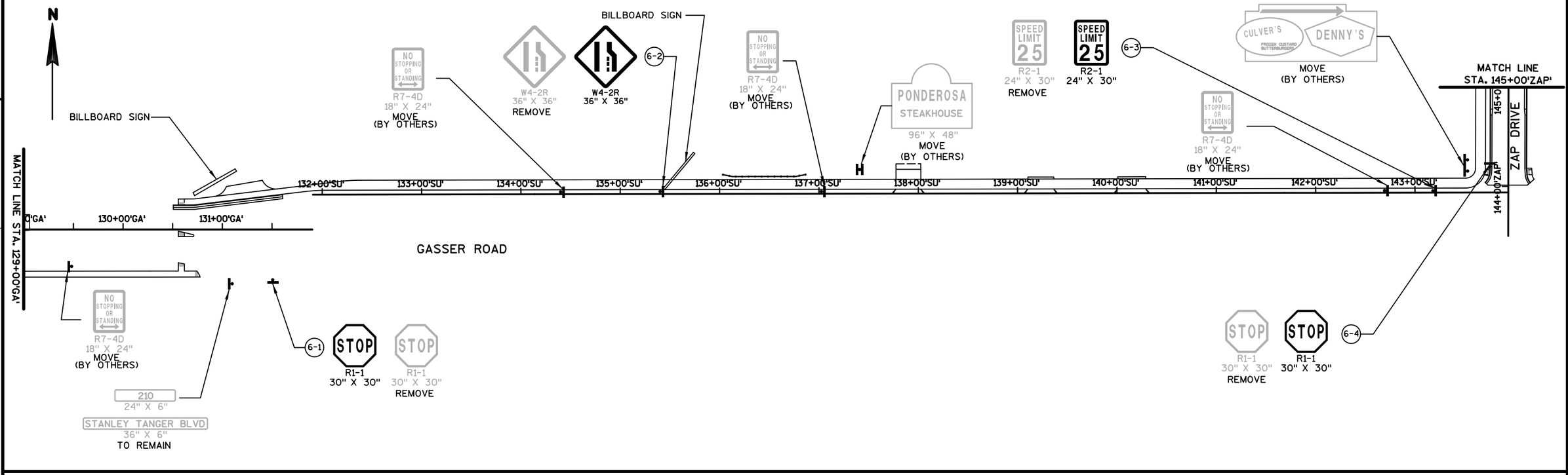

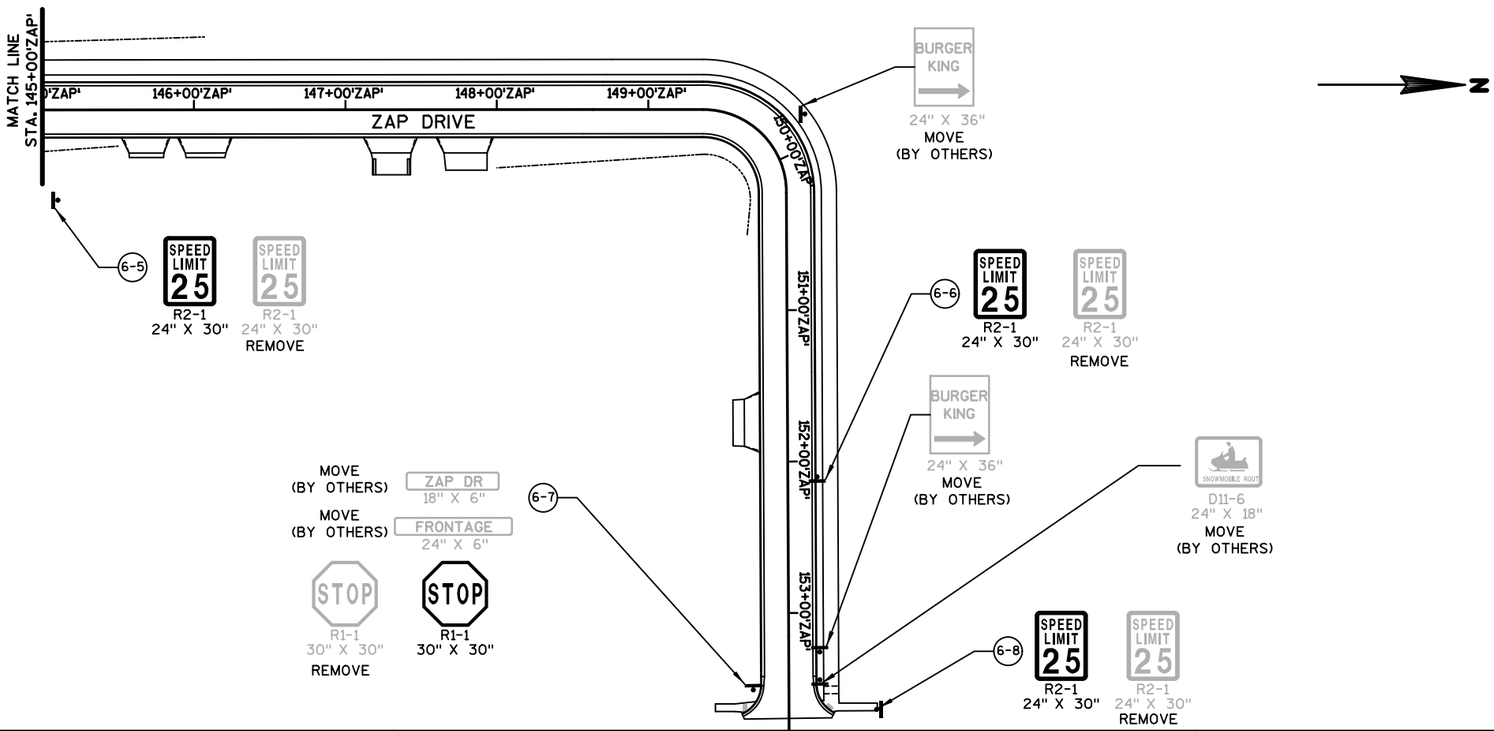

PROJECT NO: 1674-00-70	HWY: US 12	COUNTY: SAUK	PERMANENT SIGNING: GASSER ROAD AND ZAP DRIVE	SHEET	E

FILE NAME : S:\MAD\1000--1099\1089\150\Micros\Design\Ishnala Bikepath\Plan\023206_ps.dgn PLOT DATE : 11/26/2013 PLOT BY : _username_ PLOT NAME : PLOT SCALE : $$.....plotscale.....$$

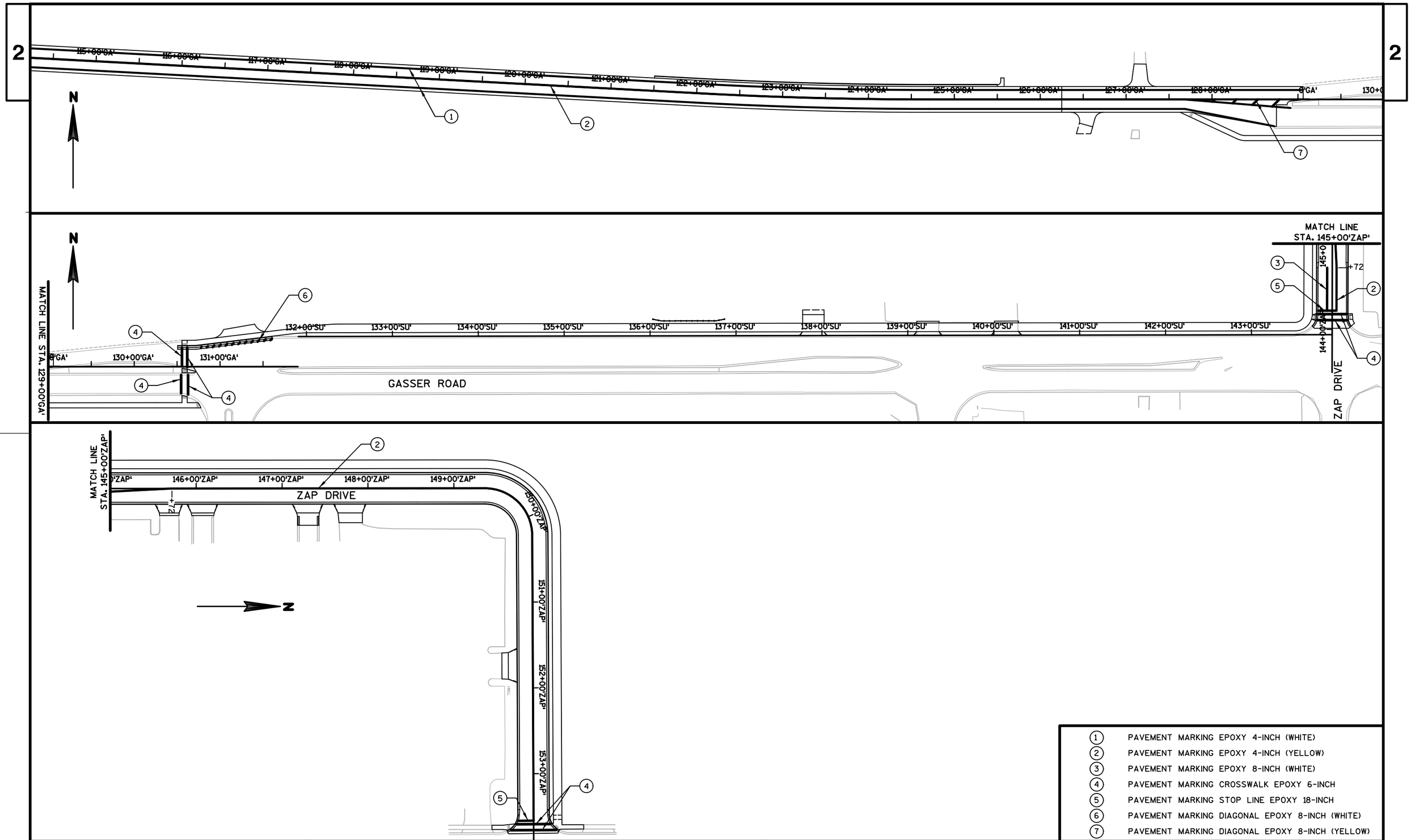

1	PAVEMENT MARKING EPOXY 4-INCH (WHITE)
2	PAVEMENT MARKING EPOXY 4-INCH (YELLOW)
3	PAVEMENT MARKING EPOXY 8-INCH (WHITE)
4	PAVEMENT MARKING CROSSWALK EPOXY 6-INCH
5	PAVEMENT MARKING STOP LINE EPOXY 18-INCH
6	PAVEMENT MARKING DIAGONAL EPOXY 8-INCH (WHITE)
7	PAVEMENT MARKING DIAGONAL EPOXY 8-INCH (YELLOW)

PROJECT NO: 1674-00-70	HWY: US 12	COUNTY: SAUK	PAVEMENT MARKING: GASSER ROAD AND ZAP DRIVE	SHEET 47	E

SIGN LEGEND

①	②	③	④	⑤	⑥	⑦
ROAD WORK AHEAD W20-1A	ROAD WORK 1500 FT W20-1B	ROAD WORK 1000 FT W20-1C	ROAD WORK 500 FT W20-1D	END ROAD WORK G20-2A 48" X 24"	FERN DELL ROAD	NORTH GASSER ROAD

⑧ ZAP DRIVE

* ALSO SEE STANDARD DETAIL S.D.D. 15 C4-2

** SIGNS TO BE LOCATED ON USH 12 FRONTAGE ROAD

(MO) SEE S.D.D. 15 C12-4 "TRAFFIC CONTROL FOR LANE CLOSURE"(SUITABLE FOR MOVING OPERATIONS) SEE SPECIAL "TRAFFIC" PROVISIONS FOR FURTHER DETAILS

SEE S.D.D. 15 C3-2 "BARRICADES AND SIGNS FOR SIDE ROAD CLOSURES" FOR ZAP DRIVE CLOSURE. ZAP DRIVE TO REMAIN OPEN UNTIL AFTER LABOR DAY 2014. SEE SPECIAL "TRAFFIC" PROVISIONS FOR FURTHER DETAILS.

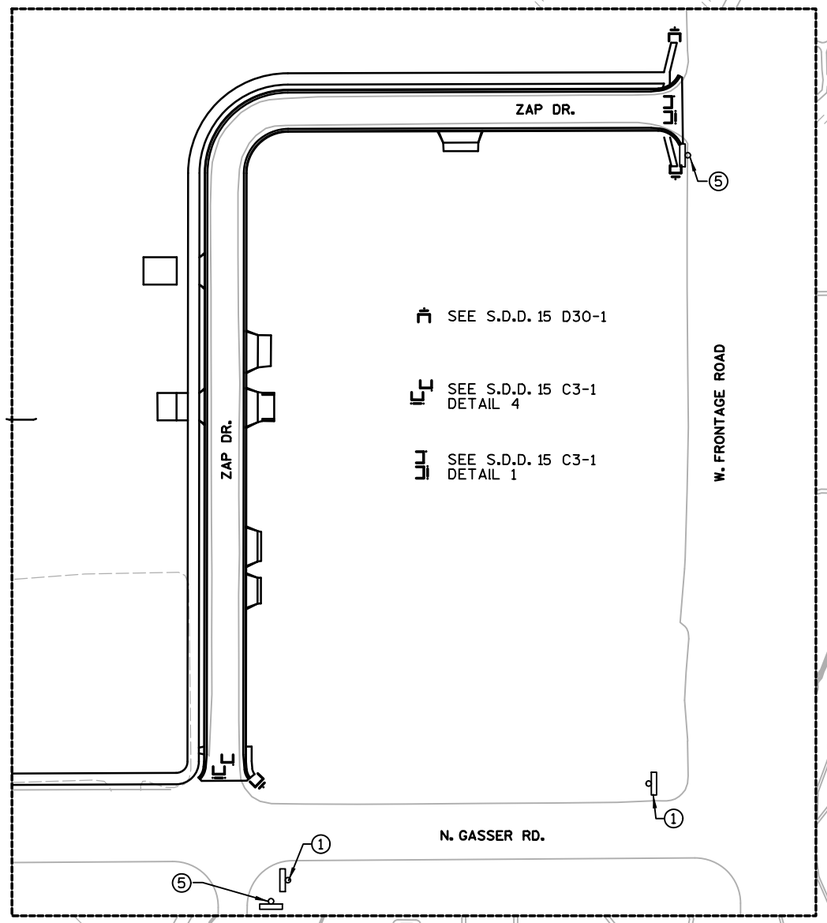

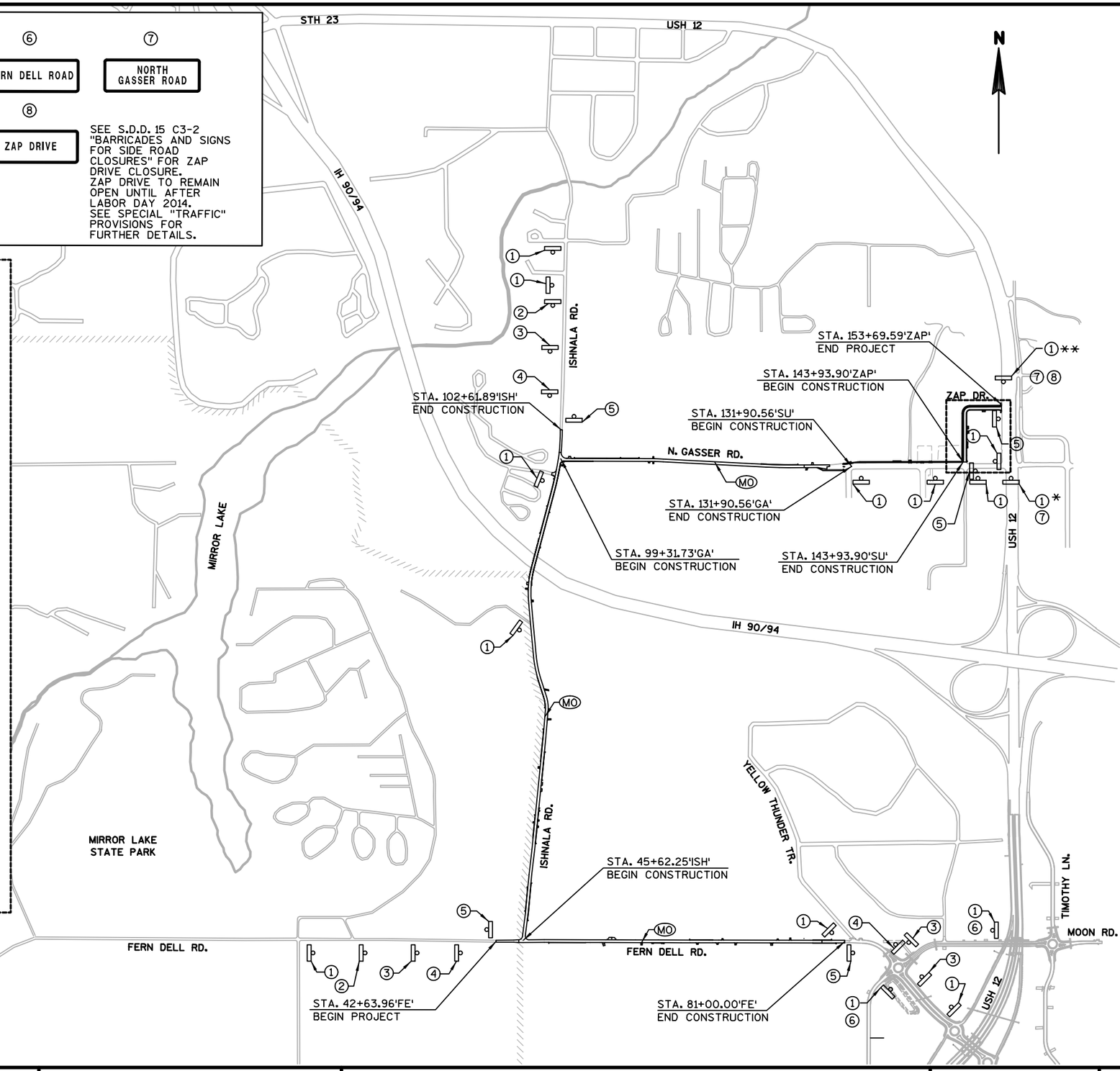

PROJECT NO: 1674-00-70	HWY: US 12	COUNTY: SAUK	TRAFFIC CONTROL - ADVANCED WARNING	SHEET 48	E

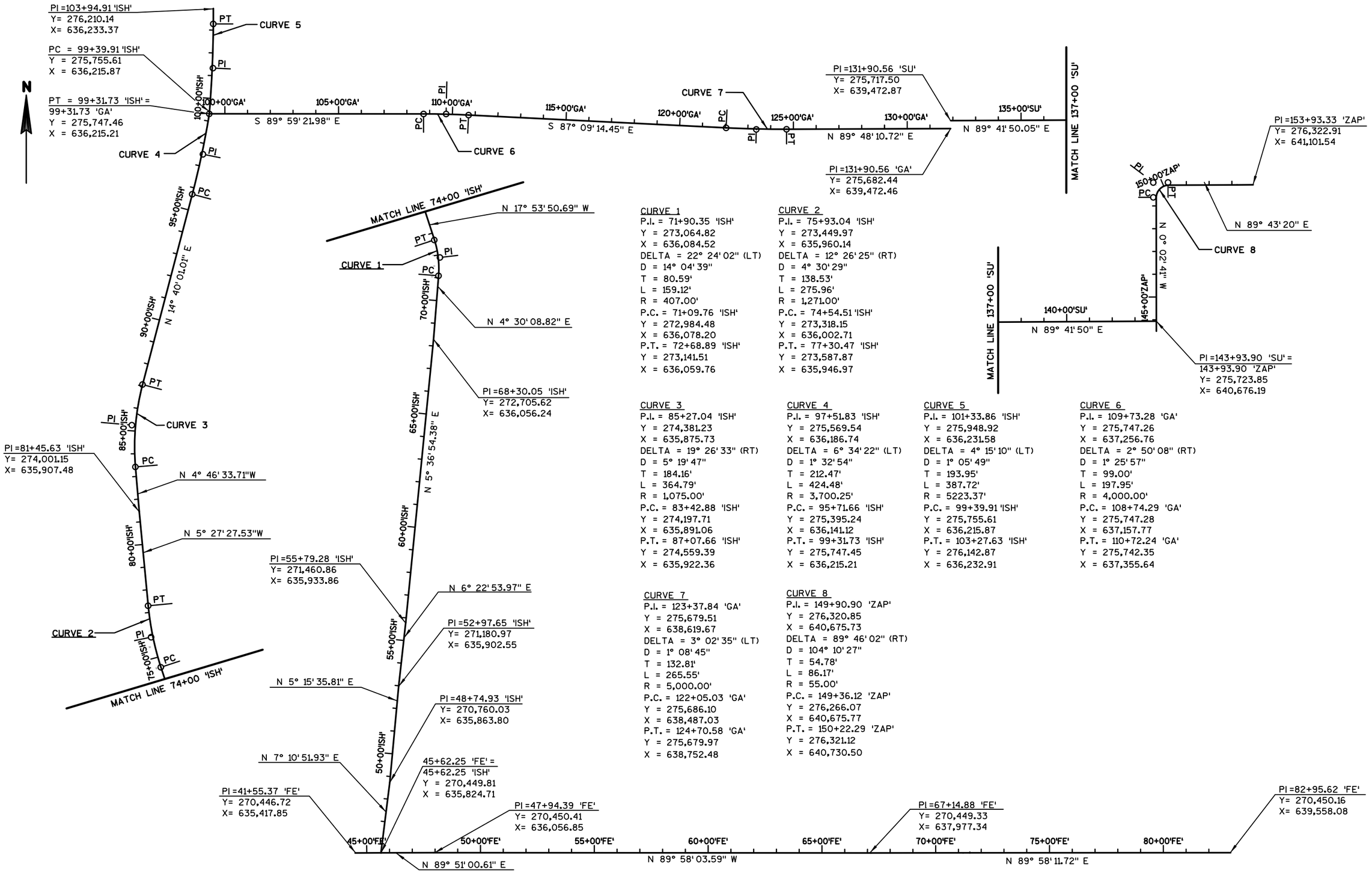

CURVE 1
P.I. = 71+90.35 'ISH'
Y = 273,064.82
X = 636,084.52
DELTA = 22° 24' 02" (LT)
D = 14° 04' 39"
T = 80.59'
L = 159.12'
R = 407.00'
P.C. = 71+09.76 'ISH'
Y = 272,984.48
X = 636,078.20
P.T. = 72+68.89 'ISH'
Y = 273,141.51
X = 636,059.76

CURVE 2
P.I. = 75+93.04 'ISH'
Y = 273,449.97
X = 635,960.14
DELTA = 12° 26' 25" (RT)
D = 4° 30' 29"
T = 138.53'
L = 275.96'
R = 1,271.00'
P.C. = 74+54.51 'ISH'
Y = 273,318.15
X = 636,002.71
P.T. = 77+30.47 'ISH'
Y = 273,587.87
X = 635,946.97

CURVE 3
P.I. = 85+27.04 'ISH'
Y = 274,381.23
X = 635,875.73
DELTA = 19° 26' 33" (RT)
D = 5° 19' 47"
T = 184.16'
L = 364.79'
R = 1,075.00'
P.C. = 83+42.88 'ISH'
Y = 274,197.71
X = 635,891.06
P.T. = 87+07.66 'ISH'
Y = 274,559.39
X = 635,922.36

CURVE 4
P.I. = 97+51.83 'ISH'
Y = 275,569.54
X = 636,186.74
DELTA = 6° 34' 22" (LT)
D = 1° 32' 54"
T = 212.47'
L = 424.48'
R = 3,700.25'
P.C. = 95+71.66 'ISH'
Y = 275,395.24
X = 636,141.12
P.T. = 99+31.73 'ISH'
Y = 275,747.45
X = 636,215.21

CURVE 5
P.I. = 101+33.86 'ISH'
Y = 275,948.92
X = 636,231.58
DELTA = 4° 15' 10" (LT)
D = 1° 05' 49"
T = 193.95'
L = 387.72'
R = 5223.37'
P.C. = 99+39.91 'ISH'
Y = 275,755.61
X = 636,215.87
P.T. = 103+27.63 'ISH'
Y = 276,142.87
X = 636,232.91

CURVE 6
P.I. = 109+73.28 'GA'
Y = 275,747.26
X = 637,256.76
DELTA = 2° 50' 08" (RT)
D = 1° 25' 57"
T = 99.00'
L = 197.95'
R = 4,000.00'
P.C. = 108+74.29 'GA'
Y = 275,747.28
X = 637,157.77
P.T. = 110+72.24 'GA'
Y = 275,742.35
X = 637,355.64

CURVE 7
P.I. = 123+37.84 'GA'
Y = 275,679.51
X = 638,619.67
DELTA = 3° 02' 35" (LT)
D = 1° 08' 45"
T = 132.81'
L = 265.55'
R = 5,000.00'
P.C. = 122+05.03 'GA'
Y = 275,686.10
X = 638,487.03
P.T. = 124+70.58 'GA'
Y = 275,679.97
X = 638,752.48

CURVE 8
P.I. = 149+90.90 'ZAP'
Y = 276,320.85
X = 640,675.73
DELTA = 89° 46' 02" (RT)
D = 104° 10' 27"
T = 54.78'
L = 86.17'
R = 55.00'
P.C. = 149+36.12 'ZAP'
Y = 276,266.07
X = 640,675.77
P.T. = 150+22.29 'ZAP'
Y = 276,321.12
X = 640,730.50

2

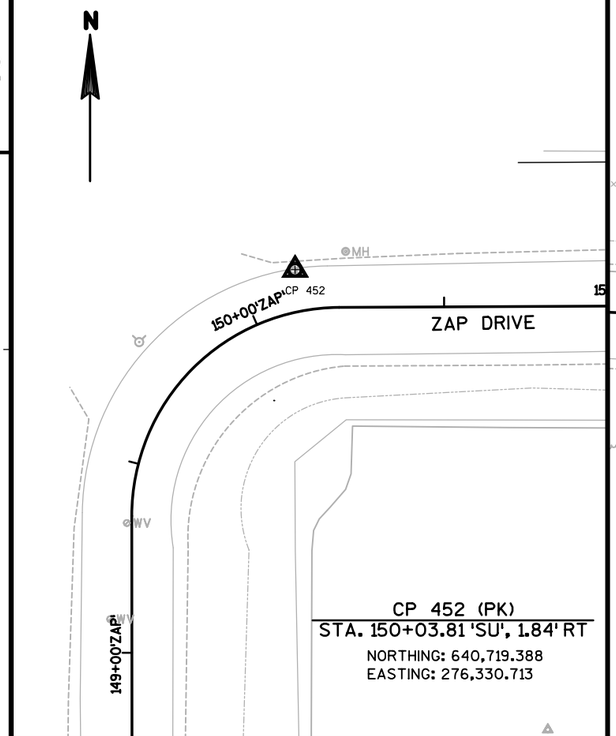

CP 452 (PK)
STA. 150+03.81 'SU', 1.84' RT
NORTHING: 640,719.388
EASTING: 276,330.713

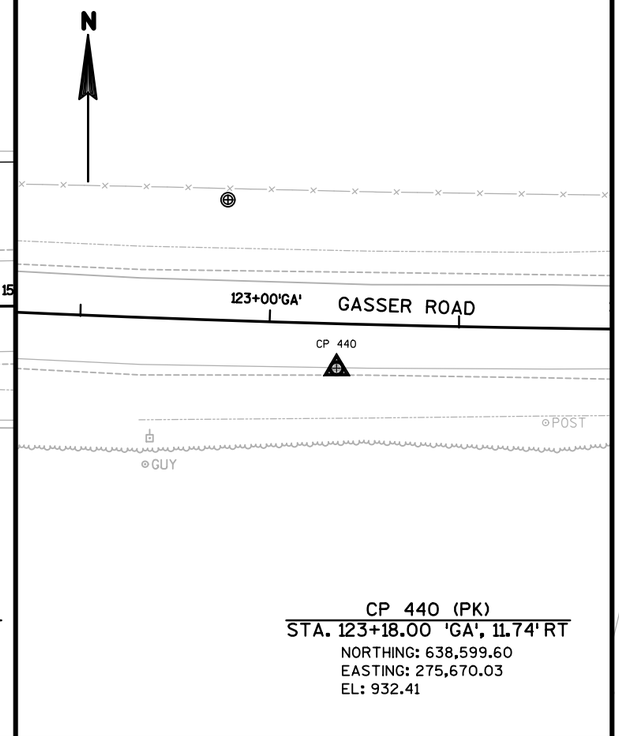

CP 440 (PK)
STA. 123+18.00 'GA', 11.74' RT
NORTHING: 638,599.60
EASTING: 275,670.03
EL: 932.41

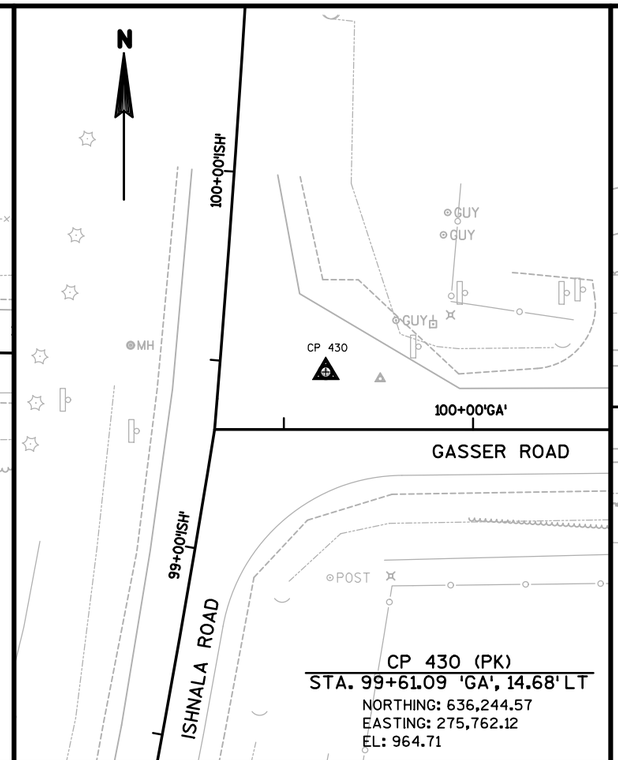

CP 430 (PK)
STA. 99+61.09 'GA', 14.68' LT
NORTHING: 636,244.57
EASTING: 275,762.12
EL: 964.71

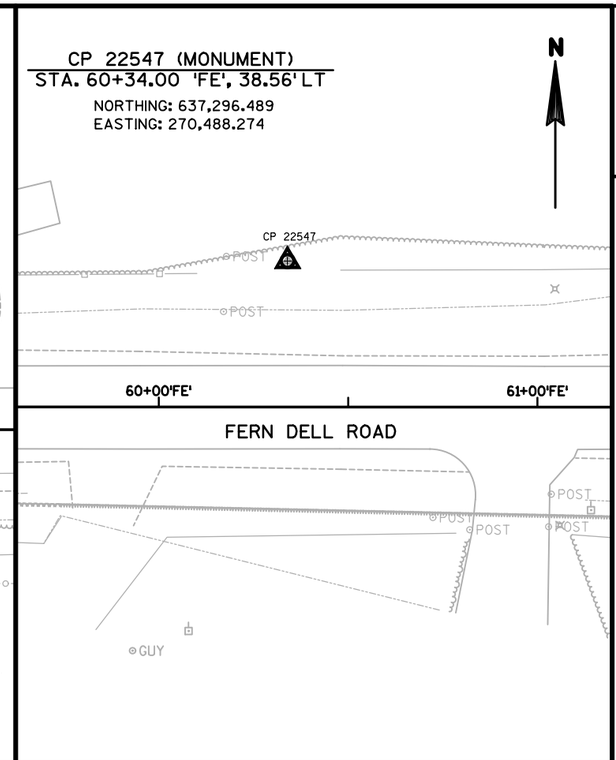

CP 22547 (MONUMENT)
STA. 60+34.00 'FE', 38.56' LT
NORTHING: 637,296.489
EASTING: 270,488.274

2

CP 420 (SPIKE)
STA. 86+60.63 'ISH', 38.43' LT
NORTHING: 635,873.88
EASTING: 274,521.74
EL: 935.11

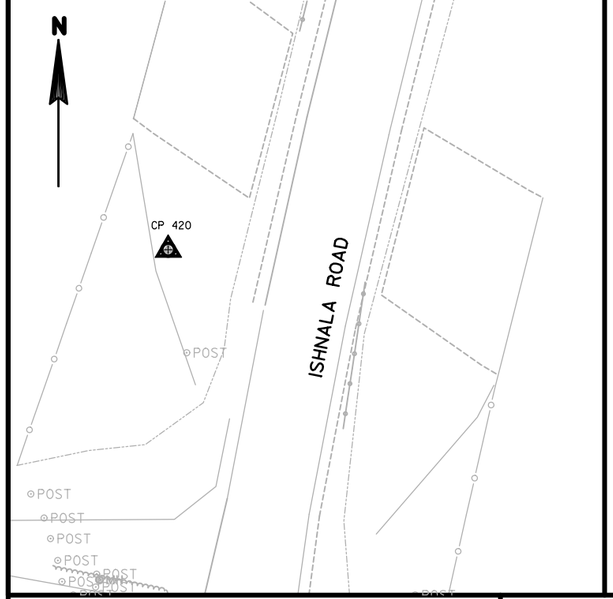

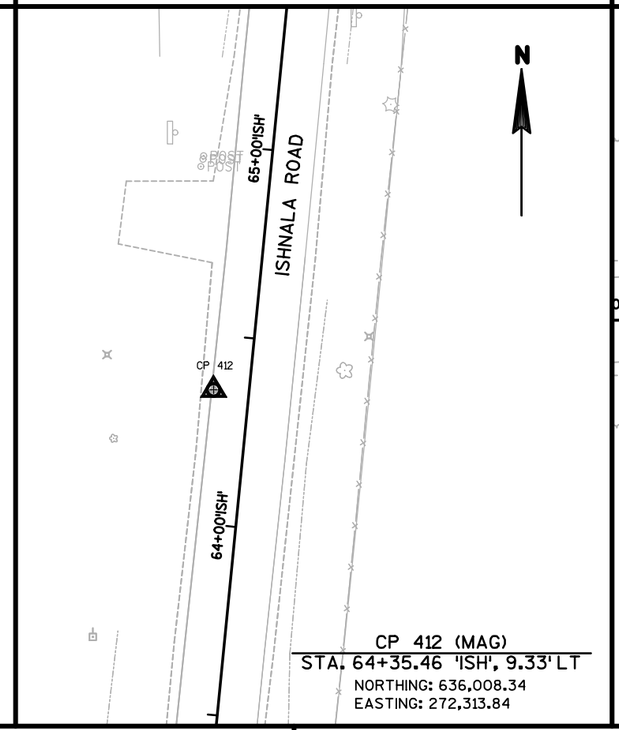

CP 412 (MAG)
STA. 64+35.46 'ISH', 9.33' LT
NORTHING: 636,008.34
EASTING: 272,313.84

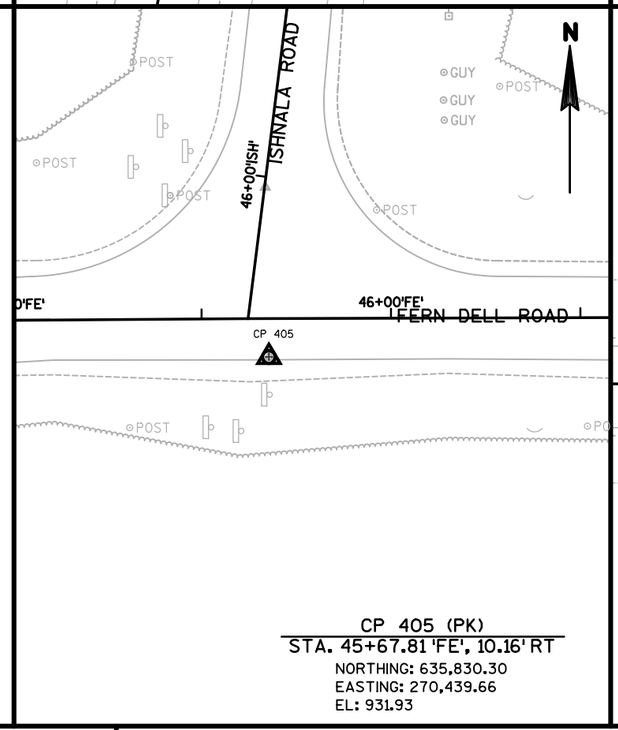

CP 405 (PK)
STA. 45+67.81 'FE', 10.16' RT
NORTHING: 635,830.30
EASTING: 270,439.66
EL: 931.93

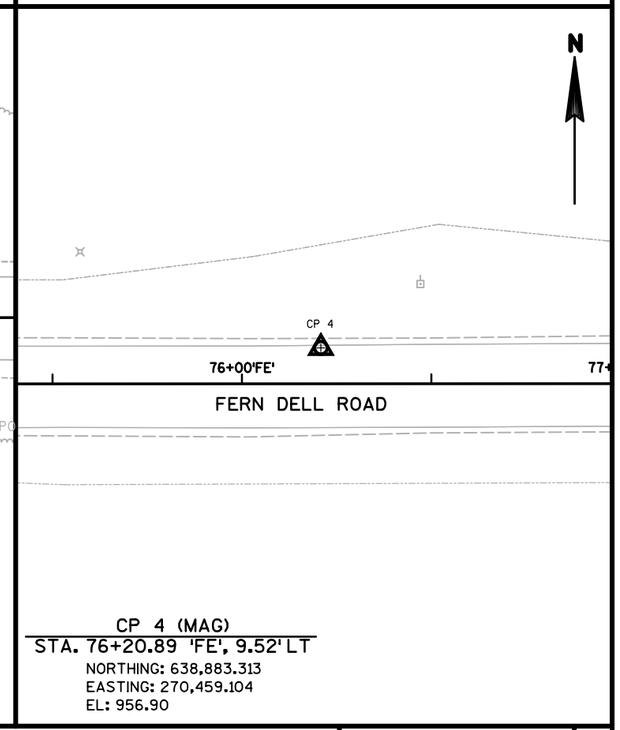

CP 4 (MAG)
STA. 76+20.89 'FE', 9.52' LT
NORTHING: 638,883.313
EASTING: 270,459.104
EL: 956.90

PROJECT NO: 1674-00-70	HWY: US 12	COUNTY: SAUK	CONTROL POINT LOCATION SHEET	SHEET 50	E

DATE 05MAR14 E S T I M A T E O F Q U A N T I T I E S

LINE NUMBER	ITEM	ITEM DESCRIPTION	UNIT	TOTAL	1674-00-70 QUANTITY
0010	108.4300	RBC PROGRESS SCHEDULE	EACH	1.000	1.000
0020	201.0105	CLEARING	STA	57.000	57.000
0030	201.0205	GRUBBING	STA	57.000	57.000
0040	203.0100	REMOVING SMALL PIPE CULVERTS	EACH	29.000	29.000
0050	204.0115	REMOVING ASPHALTIC SURFACE BUTT JOINTS	SY	510.000	510.000
0060	204.0120	REMOVING ASPHALTIC SURFACE MILLING	SY	1,825.000	1,825.000
0070	204.0130	REMOVING CURB	LF	27.000	27.000
0080	204.0150	REMOVING CURB & GUTTER	LF	119.000	119.000
0090	204.0155	REMOVING CONCRETE SIDEWALK	SY	60.000	60.000
0100	204.0165	REMOVING GUARDRAIL	LF	158.000	158.000
0110	204.0170	REMOVING FENCE	LF	760.000	760.000
0120	204.0180	REMOVING DELINEATORS AND MARKERS	EACH	10.000	10.000
0130	204.0280	SEALING PIPES	EACH	1.000	1.000
0140	204.9060.S	REMOVING (ITEM DESCRIPTION) 01. REMOVING ENDWALLS	EACH	14.000	14.000
0150	204.9060.S	REMOVING (ITEM DESCRIPTION) 02. REMOVING CASTINGS	EACH	3.000	3.000
0160	205.0100	EXCAVATION COMMON	CY	37,308.000	37,308.000
0170	206.6000.S	TEMPORARY SHORING	SF	30.000	30.000
0180	213.0100	FINISHING ROADWAY (PROJECT) 01. 1674-00-70	EACH	1.000	1.000
0190	305.0110	BASE AGGREGATE DENSE 3/4-INCH	TON	920.000	920.000
0200	305.0120	BASE AGGREGATE DENSE 1 1/4-INCH	TON	18,655.000	18,655.000
0210	325.0100	PULVERIZE AND RELAY	SY	27,790.000	27,790.000
0220	416.0160	CONCRETE DRIVEWAY 6-INCH	SY	220.000	220.000
0230	440.4410.S	INCENTIVE IRI RIDE	DOL	10,200.000	10,200.000
0240	455.0105	ASPHALTIC MATERIAL PG58-28	TON	686.000	686.000
0250	455.0605	TACK COAT	GAL	1,125.000	1,125.000
0260	460.1101	HMA PAVEMENT TYPE E-1	TON	11,445.000	11,445.000
0270	460.2000	INCENTIVE DENSITY HMA PAVEMENT	DOL	7,330.000	7,330.000
0280	465.0120	ASPHALTIC SURFACE DRIVEWAYS AND FIELD ENTRANCES	TON	270.000	270.000
0290	465.0315	ASPHALTIC FLUMES	SY	156.000	156.000
0300	520.8000	CONCRETE COLLARS FOR PIPE	EACH	3.000	3.000
0310	521.0112	CULVERT PIPE CORRUGATED STEEL 12-INCH	LF	716.000	716.000
0320	521.0728	PIPE ARCH CORRUGATED STEEL 28X20-INCH	LF	25.000	25.000
0330	521.1012	APRON ENDWALLS FOR CULVERT PIPE STEEL 12-INCH	EACH	44.000	44.000
0340	521.1015	APRON ENDWALLS FOR CULVERT PIPE STEEL 15-INCH	EACH	2.000	2.000
0350	521.1018	APRON ENDWALLS FOR CULVERT PIPE STEEL 18-INCH	EACH	2.000	2.000
0360	521.1228	APRON ENDWALLS FOR PIPE ARCH STEEL 28X20-INCH	EACH	2.000	2.000
0370	522.0318	CULVERT PIPE REINFORCED CONCRETE CLASS IV 18-INCH	LF	230.000	230.000
0380	522.0324	CULVERT PIPE REINFORCED CONCRETE CLASS IV 24-INCH	LF	62.000	62.000
0390	522.0336	CULVERT PIPE REINFORCED CONCRETE CLASS IV 36-INCH	LF	44.000	44.000
0400	522.1012	APRON ENDWALLS FOR CULVERT PIPE REINFORCED CONCRETE 12-INCH	EACH	3.000	3.000
0410	522.1018	APRON ENDWALLS FOR CULVERT PIPE REINFORCED CONCRETE 18-INCH	EACH	8.000	8.000
0420	522.1024	APRON ENDWALLS FOR CULVERT PIPE REINFORCED CONCRETE 24-INCH	EACH	2.000	2.000

3

DATE 05MAR14 E S T I M A T E O F Q U A N T I T I E S

LINE NUMBER	ITEM	ITEM DESCRIPTION	UNIT	TOTAL	1674-00-70 QUANTITY
0430	522.1036	APRON ENDWALLS FOR CULVERT PIPE REINFORCED CONCRETE 36-INCH	EACH	2.000	2.000
0440	523.0124	CULVERT PIPE REINFORCED CONCRETE HORIZONTAL ELLIPTICAL CLASS HE-III 24X38-INCH	LF	97.000	97.000
0450	523.0524	APRON ENDWALLS FOR CULVERT PIPE REINFORCED CONCRETE HORIZONTAL ELLIPTICAL 24X38-INCH	EACH	4.000	4.000
0460	530.0115	CULVERT PIPE CORRUGATED POLYETHYLENE 15-INCH	LF	6.000	6.000
0470	530.0118	CULVERT PIPE CORRUGATED POLYETHYLENE 18-INCH	LF	10.000	10.000
0480	601.0411	CONCRETE CURB & GUTTER 30-INCH TYPE D	LF	8,370.000	8,370.000
0490	602.0410	CONCRETE SIDEWALK 5-INCH	SF	23,850.000	23,850.000
0500	602.0415	CONCRETE SIDEWALK 6-INCH	SF	790.000	790.000
0510	602.0505	CURB RAMP DETECTABLE WARNING FIELD YELLOW	SF	72.000	72.000
0520	606.0200	RIPRAP MEDIUM	CY	82.000	82.000
0530	606.0300	RIPRAP HEAVY	CY	79.000	79.000
0540	608.0412	STORM SEWER PIPE REINFORCED CONCRETE CLASS IV 12-INCH	LF	581.000	581.000
0550	608.0418	STORM SEWER PIPE REINFORCED CONCRETE CLASS IV 18-INCH	LF	359.000	359.000
0560	608.0424	STORM SEWER PIPE REINFORCED CONCRETE CLASS IV 24-INCH	LF	168.000	168.000
0570	608.0430	STORM SEWER PIPE REINFORCED CONCRETE CLASS IV 30-INCH	LF	265.000	265.000
0580	611.0410	RECONSTRUCTING CATCH BASINS	EACH	1.000	1.000
0590	611.0430	RECONSTRUCTING INLETS	EACH	1.000	1.000
0600	611.0535	MANHOLE COVERS TYPE J-SPECIAL	EACH	11.000	11.000
0610	611.0612	INLET COVERS TYPE C	EACH	1.000	1.000
0620	611.0624	INLET COVERS TYPE H	EACH	6.000	6.000
0630	611.0639	INLET COVERS TYPE H-S	EACH	4.000	4.000
0640	611.0642	INLET COVERS TYPE MS	EACH	11.000	11.000
0650	611.2004	MANHOLES 4-FT DIAMETER	EACH	10.000	10.000
0660	611.3230	INLETS 2X3-FT	EACH	10.000	10.000
0670	611.3901	INLETS MEDIAN 1 GRATE	EACH	11.000	11.000
0680	612.0206	PIPE UNDERDRAIN UNPERFORATED 6-INCH	LF	90.000	90.000
0690	612.0406	PIPE UNDERDRAIN WRAPPED 6-INCH	LF	1,024.000	1,024.000
0700	614.2320	MGS GUARDRAIL 3 QS	LF	575.000	575.000
0710	614.2340	MGS GUARDRAIL 3 L	LF	112.500	112.500
0720	614.2610	MGS GUARDRAIL TERMINAL EAT	EACH	4.000	4.000
0730	616.0206	FENCE CHAIN LINK 6-FT	LF	560.000	560.000
0740	616.0406	FENCE CHAIN LINK SALVAGED 6-FT	LF	610.000	610.000
0750	616.0700.S	FENCE SAFETY	LF	500.000	500.000
0760	619.1000	MOBILIZATION	EACH	1.000	1.000
0770	624.0100	WATER	MGAL	113.700	113.700
0780	625.0500	SALVAGED TOPSOIL	SY	75,000.000	75,000.000
0790	627.0200	MULCHING	SY	41,070.000	41,070.000
0800	628.1504	SILT FENCE	LF	10,860.000	10,860.000
0810	628.1520	SILT FENCE MAINTENANCE	LF	21,720.000	21,720.000
0820	628.1905	MOBILIZATIONS EROSION CONTROL	EACH	3.000	3.000
0830	628.1910	MOBILIZATIONS EMERGENCY EROSION CONTROL	EACH	6.000	6.000
0840	628.2004	EROSION MAT CLASS I TYPE B	SY	18,760.000	18,760.000
0850	628.2006	EROSION MAT URBAN CLASS I TYPE A	SY	5,060.000	5,060.000

3

DATE 05MAR14 E S T I M A T E O F Q U A N T I T I E S

LINE NUMBER	ITEM	ITEM DESCRIPTION	UNIT	TOTAL	1674-00-70 QUANTITY
0860	628.2027	EROSION MAT CLASS II TYPE C	SY	5,740.000	5,740.000
0870	628.2037	EROSION MAT CLASS III TYPE C	SY	6,900.000	6,900.000
0880	628.7005	INLET PROTECTION TYPE A	EACH	24.000	24.000
0890	628.7010	INLET PROTECTION TYPE B	EACH	12.000	12.000
0900	628.7015	INLET PROTECTION TYPE C	EACH	19.000	19.000
0910	628.7020	INLET PROTECTION TYPE D	EACH	4.000	4.000
0920	628.7504	TEMPORARY DITCH CHECKS	LF	1,692.000	1,692.000
0930	628.7555	CULVERT PIPE CHECKS	EACH	51.000	51.000
0940	629.0210	FERTILIZER TYPE B	CWT	50.900	50.900
0950	630.0120	SEEDING MIXTURE NO. 20	LB	1,240.000	1,240.000
0960	630.0140	SEEDING MIXTURE NO. 40	LB	230.000	230.000
0970	630.0171	SEEDING MIXTURE NO. 70A	LB	320.000	320.000
0980	630.0175	SEEDING MIXTURE NO. 75	LB	95.000	95.000
0990	630.0200	SEEDING TEMPORARY	LB	2,025.000	2,025.000
1000	630.0400	SEEDING NURSE CROP	LB	745.000	745.000
1010	633.5200	MARKERS CULVERT END	EACH	20.000	20.000
1020	634.0614	POSTS WOOD 4X6-INCH X 14-FT	EACH	5.000	5.000
1030	634.0616	POSTS WOOD 4X6-INCH X 16-FT	EACH	27.000	27.000
1040	634.0618	POSTS WOOD 4X6-INCH X 18-FT	EACH	3.000	3.000
1050	634.0814	POSTS TUBULAR STEEL 2X2-INCH X 14-FT	EACH	7.000	7.000
1060	634.0816	POSTS TUBULAR STEEL 2X2-INCH X 16-FT	EACH	1.000	1.000
1070	637.2210	SIGNS TYPE II REFLECTIVE H	SF	152.900	152.900
1080	637.2230	SIGNS TYPE II REFLECTIVE F	SF	94.750	94.750
1090	638.2102	MOVING SIGNS TYPE II	EACH	1.000	1.000
1100	638.2602	REMOVING SIGNS TYPE II	EACH	30.000	30.000
1110	638.3000	REMOVING SMALL SIGN SUPPORTS	EACH	27.000	27.000
1120	638.4000	MOVING SMALL SIGN SUPPORTS	EACH	1.000	1.000
1130	642.5201	FIELD OFFICE TYPE C	EACH	1.000	1.000
1140	643.0200	TRAFFIC CONTROL SURVEILLANCE AND MAINTENANCE (PROJECT) 01. 1674-00-70	DAY	117.000	117.000
1150	643.0300	TRAFFIC CONTROL DRUMS	DAY	1,400.000	1,400.000
1160	643.0410	TRAFFIC CONTROL BARRICADES TYPE II	DAY	450.000	450.000
1170	643.0420	TRAFFIC CONTROL BARRICADES TYPE III	DAY	300.000	300.000
1180	643.0705	TRAFFIC CONTROL WARNING LIGHTS TYPE A	DAY	720.000	720.000
1190	643.0900	TRAFFIC CONTROL SIGNS	DAY	2,410.000	2,410.000
1200	643.1050	TRAFFIC CONTROL SIGNS PCMS	DAY	112.000	112.000
1210	645.0111	GEOTEXTILE FABRIC TYPE DF SCHEDULE A	SY	1,180.000	1,180.000
1220	645.0120	GEOTEXTILE FABRIC TYPE HR	SY	118.000	118.000
1230	645.0130	GEOTEXTILE FABRIC TYPE R	SY	165.000	165.000
1240	646.0106	PAVEMENT MARKING EPOXY 4-INCH	LF	51,240.000	51,240.000
1250	646.0126	PAVEMENT MARKING EPOXY 8-INCH	LF	50.000	50.000
1260	647.0566	PAVEMENT MARKING STOP LINE EPOXY 18-INCH	LF	39.000	39.000
1270	647.0716	PAVEMENT MARKING DIAGONAL EPOXY 8-INCH	LF	65.000	65.000
1280	647.0766	PAVEMENT MARKING CROSSWALK EPOXY 6-INCH	LF	248.000	248.000
1290	650.4000	CONSTRUCTION STAKING STORM SEWER	EACH	35.000	35.000
1300	650.5500	CONSTRUCTION STAKING CURB GUTTER AND CURB & GUTTER	LF	8,560.000	8,560.000
1310	650.6000	CONSTRUCTION STAKING PIPE CULVERTS	EACH	35.000	35.000
1320	650.8000	CONSTRUCTION STAKING RESURFACING REFERENCE	LF	14,023.000	14,023.000
1330	650.9910	CONSTRUCTION STAKING SUPPLEMENTAL CONTROL (PROJECT) 01. 1674-00-70	LS	1.000	1.000
1340	650.9920	CONSTRUCTION STAKING SLOPE STAKES	LF	14,023.000	14,023.000
1350	690.0150	SAWING ASPHALT	LF	680.000	680.000

3

DATE 05MAR14 E S T I M A T E O F Q U A N T I T I E S

LINE NUMBER	ITEM	ITEM DESCRIPTION	UNIT	TOTAL	1674-00-70 QUANTITY
1360	690.0250	SAWING CONCRETE	LF	27.000	27.000
1370	ASP.1T0A	ON-THE-JOB TRAINING APPRENTICE AT $5.00/HR	HRS	1,200.000	1,200.000
1380	ASP.1T0G	ON-THE-JOB TRAINING GRADUATE AT $5.00/HR	HRS	300.000	300.000
1390	SPV.0035	SPECIAL 01. CLAY LINER	CY	1,480.000	1,480.000
1400	SPV.0060	SPECIAL 01. 4-FOOT DIA. FLAT SLAB TOP	EACH	1.000	1.000
1410	SPV.0060	SPECIAL 02. INLETS TYPE 9 FLAT SLAB TOP	EACH	1.000	1.000
1420	SPV.0060	SPECIAL 03. STORM SEWER TAP	EACH	4.000	4.000
1430	SPV.0060	SPECIAL 04. ANTI-SEEP COLLAR	EACH	4.000	4.000
1440	SPV.0060	SPECIAL 05. DRAIN PLUG 6-INCH	EACH	1.000	1.000
1450	SPV.0060	SPECIAL 06. CONSTRUCTION STAKING CURB RAMP	EACH	9.000	9.000
1460	SPV.0060	SPECIAL 07. ADJUST AND EXTERNAL WATERPROOF EXISTING SANITARY MANHOLE	EACH	1.000	1.000
1470	SPV.0060	SPECIAL 08. REPLACE ADJUSTMENT, ADJUST, AND EXTERNAL WATERPROOF EXISTING SANITARY MH	EACH	3.000	3.000
1480	SPV.0060	SPECIAL 09. RECONSTRUCT MH, REPLACE ADJUSTMENT, ADJUST, AND EXT WATERPROOF EXIST SAN MH	EACH	5.000	5.000
1490	SPV.0060	SPECIAL 10. ADJUST EXISTING WATER VAVLE BOX 6-INCHES OR LESS	EACH	2.000	2.000
1500	SPV.0060	SPECIAL 11. ADJUST EXISTING WATER VALVE BOX GREATER THAN 6-INCHES	EACH	3.000	3.000
1510	SPV.0060	SPECIAL 12. ADJUST EXISTING HYDRANT	EACH	2.000	2.000
1520	SPV.0060	SPECIAL 13. REMOVE, SALVAGE, AND RELOCATE EXISTING HYDRANT	EACH	3.000	3.000
1530	SPV.0060	SPECIAL 14. CONNECT TO EXISTING WATER MAIN	EACH	3.000	3.000
1540	SPV.0060	SPECIAL 15. CONNECT TO EXISTING WATER SERVICE	EACH	4.000	4.000
1550	SPV.0060	SPECIAL 16. DUCTILE IRON 45-DEGREE BEND, 6-INCH	EACH	13.000	13.000
1560	SPV.0060	SPECIAL 17. DUCTILE IRON 45-DEGREE BEND, 8-INCH	EACH	2.000	2.000
1570	SPV.0060	SPECIAL 18. 6-INCH WATER VALVE AND BOX	EACH	1.000	1.000
1580	SPV.0060	SPECIAL 19. 8-INCH BY 6-INCH DUCTILE IRON TEE	EACH	1.000	1.000
1590	SPV.0060	SPECIAL 20. 8-INCH WATER PLUG	EACH	1.000	1.000
1600	SPV.0060	SPECIAL 21. UTILITY LINE OPENING (ULO)	EACH	5.000	5.000
1610	SPV.0090	SPECIAL 01. CONCRETE CURB AND GUTTER 24-INCH	LF	190.000	190.000
1620	SPV.0090	SPECIAL 02. DUCTILE IRON WATER MAIN 6-INCH	LF	100.000	100.000
1630	SPV.0090	SPECIAL 03. DUCTILE IRON WATER MAIN, 8-INCH	LF	76.000	76.000
1640	SPV.0105	SPECIAL 01. RESEARCH AND LOCATE EXISTING PROPERTY MONUMENTS	LS	1.000	1.000
1650	SPV.0105	SPECIAL 02. VERIFY AND REPLACE EXISTING PROPERTY MONUMENTS	LS	1.000	1.000
1660	SPV.0105	SPECIAL 03. RAILING STEEL TYPE C2 GALVANIZED STA. 136+50 'SU'	LS	1.000	1.000
1670	SPV.0120	SPECIAL 01. WATER FOR SEEDED AREAS	MGAL	1,687.000	1,687.000
1680	SPV.0165	SPECIAL 01. RIGID INSULATION	SF	320.000	320.000

3

RBC PROGRESS SCHEDULE

CATEGORY	108.4300 EACH
0010	1

REMOVING CURB

CATEGORY	LOCATION	204.0130 LF
0010	130+59'GA'	27

REMOVING DELINEATORS AND MARKER POSTS

CATEGORY	LOCATION	204.0180 EACH
0010	UNDISTRIBUTED	10

SEALING PIPES

CATEGORY	LOCATION	204.0280 EACH
0010	INFILTRATION BASIN	1

REMOVING CASTINGS

CATEGORY	LOCATION	204.9060.S.02 EACH
0010	138+66'SU'	1
	153+44'ZAP'	2
	TOTAL	3

TEMPORARY SHORING

CATEGORY	LOCATION	206.6000.S SF
0010	55+36'FE'	30

REMOVING GUARDRAIL

CATEGORY	STATION - STATION	LOCATION	204.0165 LF
0010	86+24'ISH' - 86+63'ISH'	RT	39
	87+24'ISH' - 87+63'ISH'	LT	39
	87+65'ISH' - 88+05'ISH'	RT	40
	88+66'ISH' - 89+05'ISH'	LT	40
	TOTAL		158

CLEARING AND GRUBBING

CATEGORY	STATION - STATION	LOCATION	201.0105 CLEARING STA	201.0205 GRUBBING STA
0010	44+00'FE' - 48+00'FE'	RT	4	4
	58+00'FE' - 60+00'FE'	RT	2	2
	62+00'FE' - 63+00'FE'	LT	1	1
	73+00'FE' - 74+00'FE'	RT	1	1
	46+00'ISH' - 49+00'ISH'	LT	3	3
	50+00'ISH' - 60+00'ISH'	RT	10	10
	55+00'ISH' - 56+00'ISH'	LT	1	1
	67+00'ISH' - 71+00'ISH'	LT	4	4
	66+00'ISH' - 73+00'ISH'	RT	7	7
	75+00'ISH' - 76+00'ISH'	RT	1	1
	78+00'ISH' - 81+00'ISH'	LT	3	3
	85+00'ISH' - 86+00'ISH'	LT	1	1
	100+00'GA' - 103+00'GA'	RT	3	3
	105+00'GA' - 113+00'GA'	RT	8	8
	117+00'GA' - 122+00'GA'	RT	5	5
	123+00'GA' - 126+00'GA'	RT	3	3
		TOTALS	57	57

REMOVING ENDWALLS

CATEGORY	STATION	LOCATION	204.9060.S.01 EACH	REMARKS
0010	145+90'ZAP'	CL	2	24" CPRC
	147+20'ZAP'	LT	2	18" CPRC
	148+06'ZAP'	CL	2	18" CPRC
	149+74'ZAP'	LT	1	24" CPRC
	INFILTRATION BASIN		1	18" CPRC
	UNDISTRIBUTED	---	6	
		TOTAL	14	

REMOVING ASPHALT SUMMARY

CATEGORY	STATION - STATION	204.0115 REMOVING ASPHALTIC SURFACE BUTT JOINTS SY	204.0120 REMOVING ASPHALTIC SURFACE MILLING SY
0010	42+64'FE' - 43+69'FE'	255	---
	78+50'FE' - 81+00'FE'	---	835
	101+57'ISH' - 102+62'ISH'	255	---
	126+25'GA' - 128+75'GA'	---	990
	TOTALS	510	1,825

REMOVING FENCE

CATEGORY	LOCATION	204.0170 LF
0010	INFILTRATION BASIN	610
	UNDISTRIBUTED FE	50
	UNDISTRIBUTED ISH	50
	UNDISTRIBUTED GA	50
	TOTAL	760

REMOVING SMALL PIPE CULVERTS

CATEGORY	STATION	LOCATION	203.0100 EACH	REMARKS
0010	46+36'FE'	CL	1	15" CPCS
	69+00'FE'	RT	1	12" CPCS
	73+64'FE'	LT	1	12" CPCS
	75+02'FE'	LT	1	12" CPCS
	54+70'ISH'	CL	1	18" CPCS
	60+06'ISH'	RT	1	12" CPCS
	61+32'ISH'	CL	1	18" CPCS
	62+36'ISH'	RT	1	12" CPCS
	63+04'ISH'	RT	1	12" CMCP
	69+65'ISH'	CL	1	15" CPCS
	70+20'ISH'	RT	1	18" CPCS
	84+07'ISH'	CL	1	24" CPCS
	89+23'ISH'	CL	1	30" CPCS
	98+75'ISH'	RT	1	12" CPCS
	100+42'GA'	LT	1	12" CPCS
	109+62'GA'	LT	1	18" CPCS
	109+66'GA'	RT	1	12" CPCS
	120+10'GA'	CL	1	24"x35" CPCSHE
	127+16'GA'	LT	1	15" CPCS
	145+67'ZAP'	RT	1	12" CPCS
	145+90'ZAP'	CL	1	24" CPRC
	147+20'ZAP'	LT	1	18" CPRC
	147+30'ZAP'	RT	1	12" CPCS
	147+80'ZAP'	RT	1	12" CPCS
	148+06'ZAP'	CL	1	18" CPRC
	149+74'ZAP'	LT	1	24" CPRC
	151+74'ZAP'	RT	1	12" CPCS
	153+45'ZAP'	LT	1	12" CPCS
	INFILTRATION BASIN		1	18" CPRC
		TOTAL	29	

REMOVING CURB AND GUTTER

CATEGORY	STATION - STATION	LOCATION	204.0150 LF
0010	144+01'ZAP' - 144+27'ZAP'	LT/RT	50
	153+39'ZAP' - 153+70'ZAP'	LT/RT	69
		TOTAL	119

REMOVING CONCRETE SIDEWALK

CATEGORY	STATION - STATION	LOCATION	204.0155 SY
0010	130+45'GA' - 130+71'GA'	RT	16
	144+04'ZAP' - 144+20'ZAP'	RT	8
	153+57'ZAP' - 156+65'ZAP'	LT	36
		TOTAL	60

EARTHWORK SUMMARY

CATEGORY	STATION - STATION	LOCATION	205.0100 (1) EXCAVATION COMMON CUT (2) CY	205.0100 (1) EXCAVATION COMMON EBS EXCAVATION (3) CY	(2) UNUSABLE PAVEMENT MATERIAL CY	(4) AVAILABLE MATERIAL CY	(5) REDUCED EBS IN FILL FACTOR 0.8	(6) EXPANDED EBS BACKFILL FACTOR 1.30 CY	UNEXPANDED FILL CY	(7) EXPANDED FILL FACTOR 1.30 CY	(8) MASS ORDINATE +/- CY	(9) WASTE CY	624.0100 WATER MGAL*
0010	42+64'FE' - 81+00'FE'	FERN DELL ROAD	2,210	44	914	1,295	35	57	1,636	2,081	-785	---	4.5
	45+62'ISH' - 102+62'ISH'	ISHNALA ROAD	2,878	58	1,450	1,428	46	75	3,343	4,286	-2,858	---	5.9
	108+32'GA' - 131+91'GA'	GASSER ROAD	2,273	45	723	1,550	36	59	735	908	642	583	4.6
	131+91'SU' - 143+50'SU'	GASSER ROAD	254	5	---	254	4	7	252	322	-69	---	0.5
	144+01'ZAP' - 153+70'ZAP'	ZAP DRIVE	2,764	55	343	2,421	44	72	1,780	2,256	165	93	5.6
	75+00'FE' - 76+50'FE'	LT	---	61	---	---	49	79	---	-64	64	---	0.1
	100+90'GA' - 101+10'GA'	LT	---	8	---	---	7	11	---	-8	8	---	0.0
	115+60'GA' - 116+00'GA'	LT	---	16	---	---	13	21	---	-17	17	---	0.0
	124+90'GA' - 125+80'GA'	LT	---	37	---	---	29	48	---	-38	38	---	0.1
	INFILTRATION BASIN	---	26,600	---	---	26,600	---	---	140	182	26,418	26,418	53.2
		TOTALS	36,979	329	3,431	33,548	264	429	7,885	9,908	23,640	27,093	74.5
* ADDITIONAL QUANTITIES LISTED ELSEWHERE		TOTAL EXCAVATION COMMON	37,308										74.5

1) Excavation Common does not include EBS Excavation. EBS Excavation must be added to Excavation Common in order to compute total Excavation Common.
2) Salvaged Materials are included in Excavation Common Column. Contractor's option to salvage noted materials. If not salvaged, adjust available material accordingly.
3) EBS Excavation to be backfilled with Excavation Common
4) Available Material = Excavation Common - Salvaged Materials (2)
5) Reduced EBS in fill: Excavated EBS material is usable in fills outside the 1:1 slope. EBS in fill reduction factor = 0.8
6) Expanded EBS backfill: This is to be filled with Excavation Common or Borrow material. EBS backfill factor = 1.3
7) Expanded fill = (Unexpanded Fill - Reduced EBS(5)) *1.30
8) The mass ordinate + or - Qty calculated for the location. Plus qty indicates an excess of material within the location, Minus qty indicates a shortage of material within the location.The mass ordinate = Available Material (4) - Expanded Fill (7).
9) Waste = Positive Mass Ordinate (8) - Expanded EBS Backfill (6)

FINISHING ROADWAY

CATEGORY	PROJECT I.D.	213.0100.01 EACH
0010	1674-00-70	1

PULVERIZE AND RELAY SUMMARY

CATEGORY	STATION - STATION	LOCATION	325.0100 SY
0010	45+14'FE' - 78+50'FE'	FERN DELL ROAD	8,230
	45+62'ISH' - 100+12'ISH'	ISHNALA ROAD	13,050
	99+42'GA' - 126+25'GA'	GASSER ROAD	6,510
		TOTALS	27,790

BASE AGGREGATE SUMMARY

CATEGORY	STATION - STATION	LOCATION	305.0110 BASE AGGREGATE DENSE 3/4-INCH TON	305.0120 BASE AGGREGATE DENSE 1 1/4-INCH TON	624.0100 WATER MGAL*
0010	45+14'FE' - 78+50'FE'	FERN DELL ROAD	---	4,450	8.9
	'FE' DRIVEWAYS	LT/RT	45	130	0.4
	45+62'ISH' - 100+12'ISH'	ISHNALA ROAD	---	6,550	13.0
	'ISH' DRIVEWAYS	LT/RT	50	150	0.4
	99+42'GA' - 126+25'GA'	GASSER ROAD	80	3,550	7.3
	'GA' DRIVEWAYS	LT/RT	15	45	0.1
	131+91'SU' - 143+50'SU'	GASSER ROAD	340	---	0.7
	'SU' DRIVEWAYS	LT	55	---	0.1
	144+01'ZAP' - 153+70'ZAP'	ZAP DRIVE	290	2,850	6.3
	'ZAP' DRIVEWAYS	LT/RT	45	140	0.4
	'FE' SUPERELEVATION CORRECTION	LT/RT	---	190	0.4
	'ISH SUPERELEVATION CORRECTION	LT/RT	---	410	0.8
	'GA' SUPERELEVATION CORRECTION	LT/RT	---	190	0.4
		TOTALS	920	18,655	39.2

* ADDITIONAL QUANTITIES LISTED ELSEWHERE

CONCRETE DRIVEWAY 6-INCH

CATEGORY	STATION	LOCATION	416.0160 SY
0010	137+90'SU'	LT	15
	139+23'SU'	LT	15
	140+15'SU'	LT	15
	145+69'ZAP'	RT	30
	146+08'ZAP'	RT	35
	147+30'ZAP'	RT	34
	147+80'ZAP'	RT	37
	151+74'ZAP'	RT	39
		TOTAL	220

ASPHALTIC FLUMES

CATEGORY	STATION	LOCATION	465.0315 SY
0010	48+44'FE'	RT	6
	61+12'FE'	RT	6
	63+94'FE'	LT	6
	79+56'FE'	LT	6
	80+06'FE'	RT	6
	47+94'ISH'	RT	6
	48+94'ISH'	LT	6
	51+56'ISH'	LT	6
	52+06'ISH'	RT	6
	56+44'ISH'	RT	6
	59+56'ISH'	LT	6
	60+36'ISH'	RT	6
	63+44'ISH'	RT	6
	66+56'ISH'	RT	6
	69+06'ISH'	LT	6
	71+44'ISH'	LT	6
	89+44'ISH'	RT	6
	90+94'ISH'	LT	6
	93+44'ISH'	RT	6
	94+02'ISH'	LT	6
	97+12'ISH'	LT	6
	99+80'GA'	RT	6
	100+94'GA'	LT	6
	106+02'GA'	LT	6
	108+06'GA'	LT	6
	125+56'GA'	LT	6
		TOTAL	156

ASPHALTIC ITEMS

CATEGORY	STATION - STATION	LOCATION	455.0105 ASPHALTIC MATERIAL PG58-28 TON	455.0605 TACK COAT GAL	460.1101 HMA PAVEMENT TYPE E-1 TON	465.0120 ASPHALTIC DRIVEWAYS AND FIELD ENTRANCES TON
0010	42+64'FE' - 81+00'FE'	FERN DELL ROAD	195	315	3,250	---
	'FE' DRIVEWAYS	LT/RT	---	---	---	98
	45+62'ISH' - 102+62'ISH'	ISHNALA ROAD	290	470	4,840	---
	'ISH' DRIVEWAYS	LT/RT	---	---	---	100
	99+42'GA' - 129+06'GA'	GASSER ROAD	155	250	2,590	---
	'GA' DRIVEWAYS	LT/RT	---	---	---	40
	'SU' DRIVEWAYS	LT	---	---	---	2
	144+01'ZAP' - 153+70'ZAP'	ZAP DRIVE	46	90	765	---
	'ZAP' DRIVEWAYS	LT/RT	---	---	---	30
		TOTALS	686	1,125	11,445	270

CONCRETE COLLARS FOR PIPE

CATEGORY	STATION	LOCATION	520.8000 EACH
0010	149+86'ZAP'	LT	1
	153+44'ZAP'	LT	2
		TOTAL	3

CONCRETE CURB & GUTTER SUMMARY

CATEGORY	STATION - STATION	LOCATION	601.0411 CONCRETE CURB AND GUTTER 30-INCH TYPE D LF	SPV.0090.01 CONCRETE CURB AND GUTTER 24-INCH LF	650.5500 CONSTRUCTION STAKING CURB GUTTER AND CURB & GUTTER LF
0010	48+50'FE' - 52+50'FE'	RT	400	---	400
	60+05'FE' - 61+05'FE'	RT	100	---	100
	64+00'FE' - 66+50'FE'	LT	250	---	250
	77+50'FE' - 80+00'FE'	RT	250	---	250
	77+50'FE' - 79+50'FE'	LT	200	---	200
	48+00'ISH' - 52+00'ISH'	RT	400	---	400
	49+00'ISH' - 51+50'ISH'	LT	250	---	250
	56+50'ISH' - 60+30'ISH'	RT	380	---	380
	57+00'ISH' - 59+50'ISH'	LT	250	---	250
	63+50'ISH' - 66+50'ISH'	RT	300	---	300
	65+50'ISH' - 69+00'ISH'	LT	350	---	350
	71+50'ISH' - 75+00'ISH'	LT	345	---	345
	89+50'ISH' - 99+22'ISH'	RT	980	---	980
	91+00'ISH' - 97+48'ISH'	LT	650	---	650
	99+86'GA' - 103+00'GA'	RT	315	---	315
	101+00'GA' - 108+00'GA'	LT	690	---	690
	121+50'GA' - 125+50'GA'	LT	400	---	400
	130+51'GA' - 131+61'GA'	LT	110	---	110
	144+01'ZAP' - 144+72'ZAP'	LT/RT	---	140	140
	144+18'ZAP' - 153+48'ZAP'	LT/RT	1,750	---	1,750
	153+48'ZAP' - 153+70'ZAP'	LT/RT	---	50	50
		TOTALS	8,370	190	8,560

CONCRETE SUMMARY

CATEGORY	STATION - STATION	LOCATION	602.0410 CONCRETE SIDEWALK 5-INCH SF	602.0415 CONCRETE SIDEWALK 6-INCH* SF
0010	127+63'GA' - 131+91'GA'	LT/RT	2,750	---
	131+91'SU' - 143+51'SU'	LT	10,700	790
	144+01'ZAP' - 153+70'ZAP'	LT	10,400	---
		TOTALS	23,850	790

* TO BE USED IN CONCRETE DRIVEWAY LOCATIONS
(SEE CONCRETE DRIVEWAY 6-INCH FOR LOCATIONS)

CURB RAMP SUMMARY

CATEGORY	STATION	LOCATION	602.0505 CURB RAMP DETECTABLE WARNING FIELD YELLOW SF	SPV.0060.06 CONSTRUCTION STAKING CURB RAMP EACH	REMARKS
0010	130+59'GA'	RT	24	3	TYPE 2 (RT); TYPE 5 (MED)
	130+59'GA'	LT	8	1	TYPE 4A
	130+74'GA'	RT	8	1	TYPE 2 (RT); TYPE 5 (MED)
	144+14'ZAP'	LT	8	1	TYPE 2
	144+14'ZAP'	RT	8	1	TYPE 4A
	153+62'ZAP'	LT	8	1	TYPE 1
	153+62'ZAP'	RT	8	1	TYPE 2
		TOTAL	72	9	

RIPRAP SUMMARY

CATEGORY	STATION - STATION	LOCATION	606.0200 RIPRAP MEDIUM CY	645.0130 GEOTEXTILE FABRIC TYPE R SY	606.0300 RIPRAP HEAVY CY	645.0120 GEOTEXTILE FABRIC TYPE HR SY
0010	46+36'FE'	LT	2	4	---	---
	62+36'FE'	LT	2	4	---	---
	76+52'FE'	LT	2	4	---	---
	46+40'ISH'	LT	13	25	---	---
	54+84'ISH'	LT	2	4	---	---
	61+32'ISH'	LT	---	---	3	4
	69+65'ISH'	LT	---	---	6	8
	69+65'ISH'-70+90'ISH'	LT	---	---	68	103
	70+90'ISH'	LT	---	---	2	3
	84+07'ISH'	LT	3	6	---	---
	89+24'ISH'	LT	7	15	---	---
	120+14'GA'	RT	7	15	---	---
	INFILTRATION BASIN		44	88	---	---
		TOTALS	82	165	79	118

CULVERT PIPE SUMMARY

CATEGORY	STATION	LOCATION	521.0112 CULVERT PIPE CORRUGATED STEEL 12-INCH ** LF	521.0728 PIPE ARCH CORRUGATED STEEL 28x20-INCH ** LF	521.1012 APRON ENDWALLS FOR CULVERT PIPE STEEL 12-INCH EACH	521.1015 APRON ENDWALLS FOR CULVERT PIPE STEEL 15-INCH EACH	521.1018 APRON ENDWALLS FOR CULVERT PIPE STEEL 18-INCH EACH	521.1228 APRON ENDWALLS FOR PIPE ARCH STEEL 28x20-INCH EACH	522.0318 CULVERT PIPE REINFORCED CONCRETE* CLASS IV 18-INCH LF	522.0324 CULVERT PIPE REINFORCED CONCRETE* CLASS IV 24-INCH LF	522.0336 CULVERT PIPE REINFORCED CONCRETE* CLASS IV 36-INCH LF	523.0124 CULVERT PIPE REINFORCED CONCRETE* HORIZONTAL ELLIPTICAL CLASS HE-III 24x38-INCH LF	522.1018 APRON ENDWALLS FOR CULVERT PIPE REINFORCED CONCRETE 18-INCH EACH	522.1024 APRON ENDWALLS FOR CULVERT PIPE REINFORCED CONCRETE 24-INCH EACH	522.1036 APRON ENDWALLS FOR CULVERT PIPE REINFORCED CONCRETE 36-INCH EACH	523.0524 APRON ENDWALLS FOR CULVERT PIPE REINFORCED CONCRETE HORIZONTAL ELLIPTICAL 24x38-INCH EACH	530.0115 CULVERT PIPE CORRUGATED POLYETHYLENE 15-INCH LF	530.0118 CULVERT PIPE CORRUGATED POLYETHYLENE 18-INCH LF	633.5200 MARKERS CULVERT END EACH	650.6000 CONSTRUCTION STAKING PIPE CULVERTS EACH	UPSTREAM STATION**	UPSTREAM OFFSET**	UPSTREAM INVERT**	DOWNSTREAM STATION**	DOWNSTREAM OFFSET**	DOWNSTREAM INVERT**	REMARKS
0010	46+36'FE'	CL	---	---	---	---	---	---	59	---	---	---	2	---	---	---	---	---	2	1	46+38	28.6'	925.87	46+36	30.6'	924.89	****
	54+54'FE'	RT	34	---	2	---	---	---	---	---	---	---	---	---	---	---	---	---	---	1	54+30	24.9'	959.06	54+65	25.0'	958.67	---
	55+37'FE'	LT	96	---	2	---	---	---	---	---	---	---	---	---	---	---	---	---	---	1	54+88	24.8'	957.78	55+84	29.3'	955.37	---
	58+65'FE'	RT	26	---	2	---	---	---	---	---	---	---	---	---	---	---	---	---	---	1	58+78	24.5'	957.77	58+51	25.3'	957.64	---
	62+36'FE'	LT	---	---	---	---	1	---	---	---	---	---	---	---	---	---	---	8	1	1	---	---	---	---	---	---	***
	62+45'FE'	RT	---	---	---	---	1	---	---	---	---	---	---	---	---	---	---	2	1	1	---	---	---	---	---	---	***
	64+80'FE'	RT	32	---	2	---	---	---	---	---	---	---	---	---	---	---	---	---	---	1	64+95	25.3'	961.19	64+63	27.2'	959.80	---
	67+55'FE'	LT	20	---	2	---	---	---	---	---	---	---	---	---	---	---	---	---	---	1	67+45	25.8'	965.11	67+65	25.5'	964.93	---
	69+00'FE'	RT	30	---	2	---	---	---	---	---	---	---	---	---	---	---	---	---	---	1	68+84	25.7'	963.99	69+13	25.9'	963.84	---
	72+97'FE'	RT	32	---	2	---	---	---	---	---	---	---	---	---	---	---	---	---	---	1	72+81	25.1'	960.28	73+13	25.1'	959.70	---
	73+64'FE'	LT	28	---	2	---	---	---	---	---	---	---	---	---	---	---	---	---	---	1	73+49	25.1'	959.11	73+77	25.1'	958.56	---
	75+02'FE'	LT	42	---	2	---	---	---	---	---	---	---	---	---	---	---	---	---	---	1	74+80	29.0'	955.44	75+23	29.3'	954.19	---
	76+52'FE'	LT	---	---	---	1	---	---	---	---	---	---	---	---	---	---	2	---	1	1	---	---	---	---	---	---	***
	76+47'FE'	RT	---	---	---	1	---	---	---	---	---	---	---	---	---	---	4	---	1	1	---	---	---	---	---	---	***
	46+32'ISH'	CL	---	---	---	---	---	---	55	---	---	---	2	---	---	---	---	---	2	1	46+26	25.4'	924.94	46+39	27.7'	924.39	---
	54+70'ISH'	CL	---	---	---	---	---	---	72	---	---	---	2	---	---	---	---	---	2	1	54+51	34.8'	904.65	54+86	28.7'	904.15	---
	61+32'ISH'	CL	---	---	---	---	---	---	44	---	---	---	2	---	---	---	---	---	2	1	61+32	20.3'	896.00	61+32	23.9'	894.95	---
	62+36'ISH'	RT	38	---	2	---	---	---	---	---	---	---	---	---	---	---	---	---	---	1	62+55	24.9'	955.44	75+23	24.7'	954.19	---
	63+04'ISH'	RT	46	---	2	---	---	---	---	---	---	---	---	---	---	---	---	---	---	1	63+28	25.1'	899.05	62+83	25.1'	898.14	---
	64+80'ISH'	LT	26	---	2	---	---	---	---	---	---	---	---	---	---	---	---	---	---	1	64+93	27.2'	901.49	64+67	26.8'	901.31	---
	69+65'ISH'	CL	---	---	---	---	---	---	---	---	44	---	---	---	2	---	---	---	2	1	69+65	19.8'	885.75	69+65	23.4'	884.90	---
	70+20'ISH'	RT	---	25	---	---	---	2	---	---	---	---	---	---	---	---	---	---	---	1	70+31	28	888.10	70+06	28	887.70	---
	84+07'ISH'	CL	---	---	---	---	---	---	---	62	---	---	---	2	---	---	---	---	2	1	84+07	27.9'	919.10	84+07	34.7'	917.50	---
	89+23'ISH'	CL	---	---	---	---	---	---	---	---	---	50	---	---	---	2	---	---	2	1	89+19	23.9'	930.50	89+27	25.8'	930.25	---
	98+75'ISH'	RT	24	---	2	---	---	---	---	---	---	---	---	---	---	---	---	---	---	1	98+88	32.6'	964.76	98+63	30.5'	964.65	---
	100+42'GA'	LT	44	---	2	---	---	---	---	---	---	---	---	---	---	---	---	---	---	1	100+64	23.3'	965.16	100+21	22.7'	964.28	---
	109+17'GA'	RT	24	---	2	---	---	---	---	---	---	---	---	---	---	---	---	---	---	1	109+05	24.9'	964.52	109+29	24.1'	964.28	---
	109+62'GA'	LT	22	---	2	---	---	---	---	---	---	---	---	---	---	---	---	---	---	1	109+51	24.2'	964.22	109+74	24.1'	963.73	---
	109+66'GA'	RT	26	---	2	---	---	---	---	---	---	---	---	---	---	---	---	---	---	1	109+52	23.5'	963.75	109+77	26.0'	962.51	---
	120+10'GA'	CL	---	---	---	---	---	---	---	---	---	47	---	---	---	2	---	---	2	1	120+06	20.5'	929.75	120+13	26.3'	926.40	---
	127+16'GA'	LT	30	---	2	---	---	---	---	---	---	---	---	---	---	---	---	---	---	1	127+01	25.1'	923.03	127+31	25.1'	922.52	---
INFILTRATION BASIN			96	---	8	---	---	---	---	---	---	---	---	---	---	---	---	---	---	4			SEE INFILTRATION BASIN SITE PLAN				
		TOTALS	716	25	44	2	2	2	230	62	44	97	8	2	2	4	6	10	20	35							

* FOR FULL PIPE REPLACEMENTS AND PIPE ADDITIONS JOINT TIES ARE REQ'D ALONG THE LAST THREE SECTIONS OF PIPE AND INCIDENTAL TO CULVERT PIPE REINFORCED CONCRETE.
** FOR INFORMATION ONLY. MEASUREMENTS GIVEN TO END OF PIPE AND NOT END OF ENDWALL.
*** MATCH EXISTING PIPE LOCATION AND SLOPE
**** ENDWALL TO BE PLACED AT ELEVATION GIVEN IN TABLE. APPROXIMATELY 2 FEET OF PONDING WILL BE PROVIDED FROM EXISTING GROUND TO INVERT OF ENDWALL. DO NOT FILL OVER EXISTING GROUND BEYOND THE PROPOSED SIDE SLOPE.
** MINIMUM THICKNESS (INCHES) = 0.064

MANHOLES AND INLETS SUMMARY

CATEGORY	STRUCT. NO.	STATION	LOCATION	611.2004 MANHOLES 4-FT DIAMETER EACH	611.3230 INLETS 2x3-FT EACH	611.3901 INLETS MEDIAN 1 GRATE EACH	611.0535 MANHOLE COVERS TYPE J-S EACH	INLET COVERS 611.0612 TYPE C EACH	611.0624 TYPE H EACH	611.0639 TYPE H-S EACH	611.0642 TYPE MS EACH	RIM / GRATE ELEVATION	TOP STRUCTURE ELEVATION	INLET ELEVATION	DEPTH FT	650.4000 CONSTRUCTION STAKING STORM SEWER EACH	SPV.0060.01 4-FOOT DIA. FLAT SLAB TOP EACH	SPV.0060.02 INLETS TYPE 9 FLAT SLAB TOP EACH
0010	10.2	74+54.5'ISH'	20.5' LT	1	---	---	1	---	---	---	---	916.87	915.62	913.62	2.00	1	---	---
	10.3	72+68.9'ISH'	20.5' LT	1	---	---	1	---	---	---	---	907.91	906.66	904.26	2.40	1	---	---
	10.4	72+00.0'ISH'	20.5' LT	1	---	---	1	---	---	---	---	902.47	901.22	899.22	2.00	1	---	---
	10.5	71+50.0'ISH'	20.5' LT	1	---	---	1	---	---	---	---	898.15	896.90	894.90	2.00	1	---	---
	EXISTING	138+66'SU'	4.5' LT	---	---	---	1	---	---	---	---	901.32	---	---	---	1	1	---
	20.1	145+86.5'ZAP'	17.5 LT	---	1	---	---	---	1	---	---	901.40	900.57	898.57	2.00	1	---	---
	20.2	145+86.5'ZAP'	17.5 RT	---	1	---	---	---	1	---	---	901.40	900.57	897.76	2.81	1	---	---
	20.2A	145+86.5'ZAP'	24.5 RT	---	---	1	---	---	---	---	1	900.00	900.00	898.00	2.00	1	---	---
	20.3	145+86.5'ZAP'	10.0 LT	1	---	---	1	---	---	---	---	901.73	900.48	897.48	3.00	1	---	---
	20.4	147+54.0'ZAP'	17.5 LT	---	1	---	---	---	1	---	---	900.57	899.74	897.74	2.00	1	---	---
	20.5	147+54.0'ZAP'	17.5 RT	---	1	---	---	---	1	---	---	900.57	899.74	897.24	2.50	1	---	---
	EW20.5A	147+54.0'ZAP'	22.8 RT	---	---	---	---	---	---	---	---	---	---	899.20	---	1	---	---
	20.6	147+54.0'ZAP'	10.0 LT	1	---	---	1	---	---	---	---	900.90	899.82	895.93	3.89	1	---	---
	20.7	149+90.0'ZAP'	17.5 LT	---	1	---	---	---	---	1	---	899.42	898.59	896.59	2.00	1	---	---
	20.7A	149+95.0'ZAP'	17.5 LT	---	1	---	---	---	---	1	---	899.43	898.60	896.69	1.91	1	---	---
	20.8	149+90.0'ZAP'	17.5 RT	---	1	---	---	---	---	1	---	899.42	898.59	895.84	2.75	1	---	---
	20.8A	149+95.0'ZAP'	17.5 RT	---	1	---	---	---	---	1	---	899.43	898.60	896.60	2.00	1	---	---
	20.8B	149+44.0'ZAP'	29.4 RT	---	---	1	---	---	---	---	1	899.15	898.25	895.50	2.75	1	---	---
	20.9	149+39.2'ZAP'	10.0 LT	1	---	---	1	---	---	---	---	899.97	899.22	895.00	4.22	1	---	---
	20.10	149+86.0'ZAP'	50.4' LT	---	---	---	---	---	---	---	---	---	---	893.35	---	1	---	---
	30.1	151+40.0'ZAP'	17.5 LT	---	1	---	---	---	1	---	---	900.99	900.16	898.08	2.08	1	---	---
	30.2	151+40.0'ZAP'	17.5 RT	---	1	---	---	---	1	---	---	900.99	900.16	898.08	2.08	1	---	---
	30.3	151+40.0'ZAP'	0.0' RT	1	---	---	1	---	---	---	---	901.52	900.27	897.36	2.91	1	---	---
	30.4	153+25.5'ZAP'	28.5' RT	1	---	---	---	1	---	---	---	902.40	901.15	898.15	3.00	1	---	---
	30.5	153+34.9'ZAP'	0.0' RT	1	---	---	1	---	---	---	---	903.83	902.58	896.40	6.18	1	---	---
	30.6	153+44.8'ZAP'	38.0' LT	---	---	1	---	---	---	---	1	903.36	903.36	898.86	4.50	1	---	---
	30.7	153+44.4'ZAP'	28.8' LT	---	---	---	1	---	---	---	---	904.30	---	---	---	1	---	1
---	INFILTRATION BASIN			---	---	8	---	---	---	---	8	SEE UNDERDRAIN SITE PLAN				8		
		TOATLS		10	10	11	11	1	6	4	11					35	1	1

STORM SEWER PIPE SUMMARY

CATEGORY	FROM STR.	TO STR.	608.0412 STORM SEWER PIPE REINFORCED CONCRETE CLASS IV 12-INCH LF	608.0418 STORM SEWER PIPE REINFORCED CONCRETE CLASS IV 18-INCH LF	608.0424 STORM SEWER PIPE REINFORCED CONCRETE CLASS IV 24-INCH LF	608.0430 STORM SEWER PIPE REINFORCED CONCRETE CLASS IV 30-INCH LF	522.1012 APRON ENDWALLS FOR CULVERT PIPE REINFORCED CONCRETE 12-INCH EACH
0010	EW10.1	10.2	97	---	---	---	1
	10.2	10.3	186	---	---	---	---
	10.3	10.4	65	---	---	---	---
	10.4	10.5	47	---	---	---	---
	10.5	EW10.6	48	---	---	---	1
	20.1	20.3	8	---	---	---	---
	20.2	20.3	---	28	---	---	---
	20.2A	20.2	7	---	---	---	---
	20.3	20.6	---	---	168	---	---
	20.4	20.6	8	---	---	---	---
	20.5	20.6	---	28	---	---	---
	EW20.5A	20.5	5	---	---	---	1
	20.6	20.9	---	---	---	186	---
	20.7	20.8	35	---	---	---	---
	20.7A	20.7	5	---	---	---	---
	20.8	20.8B	---	28	---	---	---
	20.8A	20.8	4	---	---	---	---
	20.8B	20.9	---	40	---	---	---
	20.9	20.10	---	---	---	79	---
	30.1	30.3	18	---	---	---	---
	30.2	30.3	18	---	---	---	---
	30.3	30.5	---	195	---	---	---
	30.4	30.5	30	---	---	---	---
	30.5	30.7	---	31	---	---	---
	30.6	30.7	---	9	---	---	---
	TOTALS		581	359	168	265	3

STRUCTURE ADJUSTMENT SUMMARY

CATEGORY	STATION	LOCATION	611.0410 RECONSTRUCTING CATCH BASINS EACH	611.0430 RECONSTRUCTING INLETS EACH
0010	149+74'ZAP'	LT	1	---
	INFILTRATION BASIN		---	1
		TOTALS	1	1

MGS GUARDRAIL

CATEGORY	STATION - STATION	LOCATION	OFFSET	614.2320 3 QS LF	614.2340 3 L LF	614.2610 TERMINAL EAT EACH
0010	85+09'ISH' - 85+62'ISH'	RT	17' - 15'	---	---	1
	85+80'ISH' - 86+33'ISH'	LT	17' - 15'	---	---	1
	89+02'ISH' - 89+56'ISH'	RT	17' - 15'	---	---	1
	89+82'ISH' - 90+35'ISH'	LT	17' - 15'	---	---	1
	85+62'ISH - 89+02'ISH'	RT	15'	337.5	---	---
	86+33'ISH' - 88+69'ISH'	LT	15'	237.5	---	---
	88+69'ISH' - 89+82'ISH'	LT	15'	---	112.5	---
			TOTAL	575.0	112.5	4

PIPE UNDERDRAIN SUMMARY

CATEGORY	LOCATION	612.0206 PIPE UNDERDRAIN UNPERFORATED 6-INCH LF	612.0406 PIPE UNDERDRAIN WRAPPED 6-INCH LF	645.0111 GEOTEXTILE FABRIC TYPE DF SCHEDULE A SY	REMARKS
0010	INFILTRATION BASIN	90	1,024	1,180	SEE UNDERDRAIN SITE PLAN

FENCE SUMMARY

CATEGORY	STATION - STATION	LOCATION	616.0206 FENCE CHAIN LINK 6-FT LF	616.0406 FENCE CHAIN LINK SALVAGED 6-FT LF	616.0700.S FENCE SAFETY LF
0010	INFILTRATION BASIN		560	610	---
	UNDISTRIBUTED		---	---	500
		TOTALS	560	610	500

MOBILIZATION

CATEGORY	619.1000 EACH
0010	1

FINISHING ITEMS

CATEGORY	STATION	-	STATION	LOCATION	625.0500 SALVAGED TOPSOIL SY	627.0200 MULCHING SY	629.0210 FERTILIZER TYPE B CWT	630.0120 SEEDING MIXTURE NO. 20 LB	630.0140 SEEDING MIXTURE NO. 40 LB	630.0171 SEEDING MIXTURE NO. 70A LB	630.0175 SEEDING MIXTURE NO. 75 LB	630.0200 SEEDING TEMPORARY LB	630.0400 SEEDING NURSE CROP LB	SPV.0120.01 WATER FOR SEEDED AREAS MGAL
0010	42+64'FE'	-	81+00'FE'	FERN DELL ROAD	10,400	5,300	6.6	230	---	55	---	280	110	234
	45+62'ISH'	-	102+62'ISH'	ISHNALA ROAD	15,100	7,450	9.5	210	---	200	---	410	400	340
	108+32'GA'	-	131+91'GA'	GASSER ROAD	9,300	5,800	5.9	230	20	---	---	250	---	209
	131+91'SU'	-	143+50'SU'	GASSER ROAD	2,100	720	1.3	---	55	---	---	55	---	47
	144+01'ZAP'	-	153+70'ZAP'	ZAP DRIVE	4,100	3,200	2.6	---	110	---	---	110	---	92
	INFILTRATION BASIN			---	23,700	13,000	15.0	320	---	---	75	640	85	533
	UNDISTRIBUTED			---	10,300	5,600	10.0	250	45	65	20	280	150	232
				TOTALS	75,000	41,070	50.9	1,240	230	320	95	2,025	745	1,687

SILT FENCE

CATEGORY	STATION - STATION	LOCATION	628.1504 SILT FENCE LF	628.1520 SILT FENCE MAINTENANCE LF
0010	44+50'FE' - 45+20'FE'	LT	70	140
	45+50'FE' - 48+50'FE'	RT	300	600
	46+16'FE' - 49+00'FE'	LT	290	580
	51+00'FE' - 54+70'FE'	LT	375	750
	58+65'FE' - 63+92'FE'	LT	535	1070
	66+00'FE' - 67+00'FE'	LT	100	200
	73+70'FE' - 74+93'FE'	LT	125	250
	75+50'FE' - 76+50'FE'	RT	100	200
	75+50'FE' - 77+50'FE'	LT	215	430
	80+00'FE' - 81+00'FE'	RT	100	200
	80+00'FE' - 81+00'FE'	LT	100	200
	46+03'ISH' - 49+00'ISH'	LT	305	610
	46+25'ISH' - 48+00'ISH'	RT	175	350
	51+57'ISH' - 57+00'ISH'	LT	545	1090
	52+08'ISH' - 56+50'ISH'	RT	440	880
	60+03'ISH' - 64+60'ISH'	LT	465	930
	68+00'ISH' - 70+00'ISH'	RT	200	400
	69+07'ISH' - 71+00'ISH'	LT	210	420
	71+00'ISH' - 73+30'ISH'	RT	245	490
	73+50'ISH' - 77+00'ISH'	RT	345	690
	80+00'ISH' - 84+66'ISH'	LT	475	950
	83+50'ISH' - 86+00'ISH'	RT	245	490
	84+78'ISH' - 85+15'ISH'	LT	40	80
	85+40'ISH' - 86+50'ISH'	LT	115	230
	103+50'GA' - 108+00'GA'	RT	450	900
	109+70'GA' - 113+50'GA'	LT	385	770
	113+00'GA' - 123+50'GA'	RT	1050	2100
	125+00'GA' - 126+40'GA'	RT	140	280
	126+60'GA' - 130+80'GA'	RT	425	850
	130+40'GA' - 137+50'SU'	LT	675	1350
	140+30'SU' - 143+50'SU'	LT	320	640
	INFILTRATION BASIN	---	1300	2600
		TOTALS	10,860	21,720

INLET PROTECTION

CATEGORY	STATION	LOCATION	628.7005 TYPE A EACH	628.7010 TYPE B EACH	628.7015 TYPE C EACH	628.7020 TYPE D EACH
0010	127+88'GA'	RT	1	---	---	---
	130+43'GA'	RT	---	---	1	---
	130+50'GA'	RT	---	---	1	---
	130+68'GA'	LT	1	---	---	---
	131+79'GA'	RT	---	---	1	---
	131+84'GA'	LT	---	---	1	---
	131+85'SU'	RT	---	---	1	---
	136+30'SU'	RT	---	---	1	---
	136+41'SU'	RT	---	---	1	---
	138+27'SU'	RT	---	---	1	---
	138+34'SU'	RT	---	---	1	---
	138+44'SU'	RT	---	---	1	---
	141+14'SU'	RT	---	---	1	---
	143+47'SU'	RT	---	---	1	---
	145+87'ZAP'	LT	1	---	1	---
	145+87'ZAP'	RT	1	---	1	---
	145+87'ZAP'	RT	1	1	---	---
	147+54'ZAP'	LT	1	---	1	---
	147+54'ZAP'	RT	1	---	1	---
	149+90'ZAP'	LT	1	---	---	1
	149+95'ZAP'	LT	1	---	---	1
	149+90'ZAP'	RT	1	---	---	1
	149+95'ZAP'	RT	1	---	---	1
	149+44'ZAP'	RT	1	1	---	---
	151+40'ZAP'	LT	1	---	1	---
	151+40'ZAP'	RT	1	---	1	---
	153+26'ZAP'	RT	1	1	---	---
	153+45'ZAP'	LT	1	1	---	---
	153+70'ZAP'	LT	---	---	1	---
	INFILTRATION BASIN		8	8	---	---
		TOTALS	24	12	19	4

TRAFFIC CONTROL SUMMARY

CATEGORY	ROADWAY	643.0300 TRAFFIC CONTROL DRUMS DAYS	643.0410 TRAFFIC CONTROL BARRICADES TYPE II DAYS	643.0420 TRAFFIC CONTROL BARRICADES TYPE III DAYS	643.0705 TRAFFIC CONTROL WARNING LIGHTS TYPE A DAYS	643.0900 TRAFFIC CONTROL SIGNS DAYS	643.1050 TRAFFIC CONTROL SIGNS PCMS DAYS
0010							
	FERN DELL ROAD	---	---	---	---	1,050	28
	ISHNALA ROAD	---	---	---	---	560	28
	GASSER ROAD	---	---	---	---	490	28
	ZAP DRIVE	---	450	300	650	310	28
	UNDISTRIBUTED	1,400	---	---	70	---	0
	TOTALS	1,400	450	300	720	2,410	112

EROSION MAT

CATEGORY	STATION	-	STATION	LOCATION	628.2004 EROSION MAT CLASS I TYPE B SY	628.2027 EROSION MAT CLASS II TYPE C SY	628.2037 EROSION MAT CLASS III TYPE C SY	628.2006 EROSION MAT URBAN CLASS I TYPE A SY
0010	42+64'FE'	-	81+00'FE'	FERN DELL ROAD	3,500	860	---	720
	45+62'ISH'	-	102+62'ISH'	ISHNALA ROAD	3,400	3,050	---	1,200
	108+32'GA'	-	131+91'GA'	GASSER ROAD	2,250	590	---	700
	131+91'SU'	-	143+50'SU'	GASSER ROAD	710	90	---	560
	144+01'ZAP'	-	153+70'ZAP'	ZAP DRIVE	---	---	---	880
	INFILTRATION BASIN			---	5,150	---	5,500	---
	UNDISTRIBUTED			---	3,750	1,150	1,400	1,000
				TOTALS	18,760	5,740	6,900	5,060

MOBILIZATIONS EROSION CONTROL

CATEGORY	PROJECT	628.1905 EACH
0010	1674-00-70	3

MOBILIZATIONS EMERGENCY EROSION CONTROL

CATEGORY	PROJECT	628.1910 EACH
0010	1674-00-70	6

CULVERT PIPE CHECKS

CATEGORY	STATION	LOCATION	TYPE	SIZE	628.7555 EACH
0010	46+38'FE'	RT	CIRCULAR	18"	3
	54+86'FE'	LT	CIRCULAR	12"	1
	62+47'FE'	RT	CIRCULAR	18"	3
	67+43'FE'	LT	CIRCULAR	12"	1
	68+83'FE'	RT	CIRCULAR	12"	1
	76+46'FE'	RT	CIRCULAR	15"	1
	54+46'ISH'	RT	CIRCULAR	18"	3
	61+32'ISH'	RT	CIRCULAR	18"	3
	62+60'ISH'	RT	CIRCULAR	12"	1
	63+32'ISH'	RT	CIRCULAR	12"	1
	64+94'ISH'	LT	CIRCULAR	12"	1
	69+65'ISH'	RT	CIRCULAR	36"	6
	70+37'ISH'	RT	CIRCULAR	12"	1
	75+52'ISH'	LT	CIRCULAR	12"	1
	84+07'ISH'	RT	CIRCULAR	24"	1
	89+24'ISH'	RT	ELLIPTICAL	24" x 38"	8
	98+88'ISH'	RT	CIRCULAR	12"	1
	100+66'GA'	LT	CIRCULAR	12"	1
	109+00'GA'	RT	CIRCULAR	12"	1
	109+51'GA'	LT	CIRCULAR	12"	1
	109+52'GA'	RT	CIRCULAR	12"	1
	120+04'GA'	LT	ELLIPTICAL	24" x 38"	8
	126+96'GA'	LT	CIRCULAR	12"	1
	147+54'ZAP'	RT	CIRCULAR	12"	1
			TOTAL		51

FIELD OFFICE TYPE C

CATEGORY	642.5201 EACH
0010	1

CLAY LINER

CATEGORY	LOCATION	SPV.0035.01 CY
0010	INFILTRATION BASIN	1,480

TRAFFIC CONTROL SURVEILLANCE AND MAINTENANCE

CATEGORY	PROJECT	643.0200 DAYS
0010	1674-00-70	117

TEMPORARY DITCH CHECKS

CATEGORY	STATION	LOCATION	628.7504 LF
0010	45+50'FE'	RT	12
	46+00'FE'	RT	12
	48+50'FE'	LT	12
	48+75'FE'	LT	12
	49+00'FE'	LT	12
	49+50'FE'	LT	12
	50+00'FE'	LT	12
	50+25'FE'	LT	12
	50+75'FE'	LT	12
	55+00'FE'	RT	12
	56+50'FE'	LT	12
	57+00'FE'	RT	12
	58+00'FE'	LT	12
	59+00'FE'	RT	12
	60+00'FE'	LT	12
	61+00'FE'	LT	12
	63+50'FE'	LT	12
	63+75'FE'	LT	12
	64+00'FE'	LT	12
	64+50'FE'	RT	12
	64+75'FE'	LT	12
	65+25'FE'	RT	12
	65+50'FE'	LT	12
	69+40'FE'	LT	12
	70+50'FE'	LT	12
	71+00'FE'	RT	12
	72+50'FE'	LT	12
	72+50'FE'	RT	12
	73+75'FE'	RT	12
	74+75'FE'	RT	12
	75+25'FE'	RT	12
	75+50'FE'	LT	12
	75+75'FE'	RT	12
	77+50'FE'	LT	12
	46+60'ISH'	RT	12
	47+00'ISH'	RT	12
	47+25'ISH'	RT	12
	47+50'ISH'	RT	12
	47+75'ISH'	RT	12
	48+50'ISH'	LT	12
	48+75'ISH'	LT	12
	50+50'ISH'	LT	12
	51+00'ISH'	LT	12
	51+25'ISH'	LT	12
	51+65'ISH'	LT	12
	52+00'ISH'	LT	12
	52+70'ISH'	RT	12
	52+85'ISH'	RT	12
	53+00'ISH'	RT	12
	53+25'ISH'	RT	12
	SUBTOTAL		600

CON'T ON RIGHT

TEMPORARY DITCH CHECKS

CATEGORY	STATION	LOCATION	628.7504 LF
0010	53+50'ISH'	RT	12
	53+67'ISH'	RT	12
	53+83'ISH'	RT	12
	54+00'ISH'	RT	12
	54+25'ISH'	RT	12
	55+00'ISH'	RT	12
	59+50'ISH'	LT	12
	59+75'ISH'	LT	12
	60+00'ISH'	LT	12
	60+80'ISH'	RT	12
	66+50'ISH'	RT	12
	66+75'ISH'	RT	12
	67+00'ISH'	RT	12
	67+35'ISH'	RT	12
	67+75'ISH'	RT	12
	68+25'ISH'	RT	12
	69+10'ISH'	LT	12
	70+50'ISH'	LT	12
	70+70'ISH'	LT	12
	70+90'ISH'	LT	12
	77+25'ISH'	RT	12
	77+50'ISH'	LT	12
	78+00'ISH'	RT	12
	80+00'ISH'	RT	12
	82+00'ISH'	RT	12
	85+75'ISH'	RT	12
	86+00'ISH'	RT	12
	87+00'ISH'	RT	12
	87+50'ISH'	LT	12
	88+00'ISH'	RT	12
	88+50'ISH'	LT	12
	89+35'ISH'	RT	12
	89+55'ISH'	RT	12
	89+75'ISH'	RT	12
	90+00'ISH'	LT	12
	90+10'ISH'	RT	12
	90+25'ISH'	LT	12
	90+50'ISH'	RT	12
	90+55'ISH'	LT	12
	90+85'ISH'	LT	12
	90+90'ISH'	RT	12
	91+15'ISH'	LT	12
	91+25'ISH'	RT	12
	91+50'ISH'	LT	12
	91+50'ISH'	RT	12
	91+80'ISH'	RT	12
	91+90'ISH'	LT	12
	92+25'ISH'	RT	12
	92+25'ISH'	LT	12
	92+60'ISH'	LT	12
	SUBTOTAL		600

CON'T ON RIGHT

TEMPORARY DITCH CHECKS

CATEGORY	STATION	LOCATION	628.7504 LF
0010	92+75'ISH'	RT	12
	93+00'ISH'	LT	12
	93+20'ISH'	RT	12
	93+40'ISH'	LT	12
	93+60'ISH'	RT	12
	94+00'ISH'	LT	12
	94+50'ISH'	LT	12
	94+50'ISH'	RT	12
	94+75'ISH'	RT	12
	95+50'ISH'	RT	12
	95+50'ISH'	LT	12
	97+50'ISH'	RT	12
	99+70'GA'	RT	12
	101+00'GA'	RT	12
	101+25'GA'	LT	12
	101+75'GA'	LT	12
	105+00'GA'	RT	12
	105+00'GA'	LT	12
	107+00'GA'	RT	12
	107+75'GA'	LT	12
	108+40'GA'	LT	12
	110+50'GA'	LT	12
	111+00'GA'	RT	12
	111+90'GA'	RT	12
	112+50'GA'	RT	12
	113+50'GA'	LT	12
	114+15'GA'	LT	12
	114+60'GA'	LT	12
	115+50'GA'	LT	12
	115+90'GA'	LT	12
	116+25'GA'	LT	12
	116+75'GA'	LT	12
	117+20'GA'	LT	12
	117+60'GA'	LT	12
	118+50'GA'	LT	12
	119+50'GA'	LT	12
	124+00'GA'	RT	12
	125+00'GA'	RT	12
	125+25'GA'	LT	12
	125+75'GA'	LT	12
	128+00'GA'	LT	12
	SUBTOTAL		492
	TOTAL		1,692

RESEARCH AND LOCATE EXISTING PROPERTY MONUMENTS

CATEGORY	SPV.0105.01 LS
0010	1

VERIFY AND REPLACE EXISTING PROPERTY MONUMENTS

CATEGORY	SPV.0105.02 LS
0010	1

CONSTRUCTION STAKING

CATEGORY	STATION	-	STATION	LOCATION	650.8000 RESURFACING REFERENCE LF	650.9920 SLOPE STAKES LF
0010	42+64'FE'	-	81+00'FE'	FERN DELL ROAD	3,836	3,836
	45+62'ISH'	-	102+62'ISH'	ISHNALA ROAD	5,700	5,700
	108+32'GA'	-	131+91'GA'	GASSER ROAD	2,359	2,359
	131+91'SU'	-	143+50'SU'	GASSER ROAD	1,159	1,159
	144+01'ZAP'	-	153+70'ZAP'	ZAP DRIVE	969	969
				TOTALS	14,023	14,023

CONSTRUCTION STAKING SUPPLEMENTAL CONTROL

CATEGORY	PROJECT	650.9910 LS
0010	1674-00-70	1

STORM SEWER TAP

CATEGORY	LOCATION	SPV.0060.03 EACH
0010	149+86'ZAP'	1
	153+44'ZAP'	2
	INFILTRATION BASIN	1
	TOTAL	4

ANTI-SEEP COLLAR

CATEGORY	LOCATION	SPV.0060.04 EACH
0010	INFILTRATION BASIN	4

DRAIN PLUG 6-INCH

CATEGORY	LOCATION	SPV.0060.05 EACH
0010	INFILTRATION BASIN	1

SAWING

CATEGORY	STATION	-	STATION	LOCATION	690.0150 ASPHALT LF	690.0250 CONCRETE LF
010	42+64'FE'	-	81+00'FE'	FERN DELL ROAD	110	---
	45+62'ISH'	-	102+62'ISH'	ISHNALA ROAD	145	---
	108+32'GA'	-	131+91'GA'	GASSER ROAD	135	---
	131+91'SU'	-	143+50'SU'	GASSER ROAD	55	---
	144+01'ZAP'	-	153+70'ZAP'	ZAP DRIVE	235	27
				TOTALS	680	27

PAVEMENT MARKING

CATEGORY	STATION	-	STATION	LOCATION	646.0106 EPOXY 4-INCH (WHITE) LF	646.0106 EPOXY 4-INCH (YELLOW) LF	646.0126 EPOXY 8-INCH (WHITE) LF	647.0766 CROSSWALK EPOXY 6-INCH LF	647.0566 STOP LINE EPOXY 18-INCH LF	647.0716 DIAGONAL EPOXY 8-INCH (YELLOW) LF	647.0716 DIAGONAL EPOXY 8-INCH (WHITE) LF
0010	42+64'FE'	-	81+00'FE'	FERN DELL ROAD	7,560	7,670	---	---	---	---	---
	45+62'ISH'	-	102+62'ISH'	ISHNALA ROAD	11,200	11,300	---	---	---	---	---
	108+32'GA'	-	131+91'GA'	GASSER ROAD	5,790	5,850	---	88	---	32	33
	144+01'ZAP'	-	153+70'ZAP'	ZAP DRIVE	---	1,870	50	160	39	---	---
				SUBTOTALS	24,550	26,690	50	248	39	32	33
				TOTALS	51,240		50	248	39	65	

PERMANENT SIGNING SUMMARY

CATEGORY	SIGN NO.	APPROX. STA.	LOC.	SIGN CODE	SIGN MESSAGE	SIGN SIZE (W x H) IN	637.2210 SIGNS TYPE II REFLECTIVE H SF	637.2230 SIGNS TYPE II REFLECTIVE F SF	634.0614 POSTS WOOD 4x6-INCH x 14-FT EACH	634.0616 POSTS WOOD 4x6-INCH x 16-FT EACH	634.0618 POSTS WOOD 4x6-INCH x 18-FT EACH	634.0814 POSTS TUBULAR STEEL 2x2-INCH x 14-FT EACH	634.0816 POSTS TUBULAR STEEL 2x2-INCH x 16-FT EACH	638.2102 MOVING SIGNS TYPE II EACH	638.4000 MOVING SMALL SIGN SUPPORTS EACH	638.2602 REMOVING SIGNS TYPE II EACH	638.3000 REMOVING SMALL SIGN SUPPORTS EACH
0010	1-1	44+05 FE	LT	R2-1	SPEED LIMIT 35 MPH	24 x 30	5.00	0.00	---	1	---	---	---	---	---	1	1
	1-2	54+60 FE	LT	W2-2	TEE	30 x 30	0.00	6.25	---	1	---	---	---	---	---	1	1
	1-3	57+00 FE	LT	R2-1	SPEED LIMIT 35 MPH	24 x 30	5.00	0.00	---	1	---	---	---	---	---	1	1
	1-4	46+05 ISH	LT	R1-1	STOP	30 x 30	5.18	0.00	---	1	---	---	---	---	---	1	1
	1-5	49+00 FE	RT	R2-1	SPEED LIMIT 35 MPH	24 x 30	5.00	0.00	1	---	---	---	---	---	---	---	---
	1-6	64+00 FE	RT	R2-1	SPEED LIMIT 35 MPH	24 x 30	5.00	---	---	1	---	---	---	---	---	---	---
	1-7	72+00 FE	LT	R2-1	SPEED LIMIT 35 MPH	24 x 30	5.00	---	---	1	---	---	---	---	---	1	1
	2-1	79+00 FE	LT	R2-1	SPEED LIMIT 35 MPH	24 x 30	5.00	---	1	---	---	---	---	---	---	---	---
	3-1	47+15 ISH	RT	R2-1	SPEED LIMIT 35 MPH	24 x 30	5.00	---	---	1	---	---	---	---	---	1	1
	3-2	50+25 ISH	LT	W3-1	STOP AHEAD	36 x 36	---	9.00	---	---	1	---	---	---	---	1	1
	3-3	52+00 ISH	LT	R2-1	SPEED LIMIT 35 MPH	24 x 30	5.00	---	---	1	---	---	---	---	---	---	---
	3-4	61+00 ISH	RT	R2-1	SPEED LIMIT 35 MPH	24 x 30	5.00	---	---	1	---	---	---	---	---	---	---
	3-5	65+35 ISH	RT	W1-5R	RIGHT WINDING CURVE	30 x 30	---	6.25	1	---	---	---	---	---	---	1	1
	3-5	65+35 ISH	RT	W13-1	ADVISORY SPEED 30 MPH	18 x 18	---	2.25	---	---	---	---	---	---	---	---	---
	3-6	67+00 ISH	LT	R2-1	SPEED LIMIT 35 MPH	24 x 30	5.00	---	1	---	---	---	---	---	---	---	---
	3-7	76+00 ISH	RT	R2-1	SPEED LIMIT 35 MPH	24 x 30	5.00	---	---	1	---	---	---	---	---	---	---
	4-1	80+95 ISH	LT	W1-5R	RIGHT WINDING CURVE	30 x 30	---	6.25	---	1	---	---	---	---	---	1	1
	4-1	80+95 ISH	LT	W13-1	ADVISORY SPEED 30 MPH	18 x 18	---	2.25	---	---	---	---	---	---	---	---	---
	4-2	82+00 ISH	LT	R2-1	SPEED LIMIT 35 MPH	24 x 30	5.00	---	---	1	---	---	---	---	---	---	---
	4-3	91+00 ISH	RT	R2-1	SPEED LIMIT 35 MPH	24 x 30	5.00	---	---	1	---	---	---	---	---	---	---
	4-4	93+05 ISH	RT	W11-2	PEDESTRIAN CROSSING	30 x 30	---	6.25	---	1	---	---	---	---	---	1	1
	4-4	93+05 ISH	RT	W11-15P	TRAIL X-ING	24 x 18	---	3.00	---	---	---	---	---	---	---	1	---
	4-5	95+10 ISH	LT	R2-1	SPEED LIMIT 35 MPH	24 x 30	5.00	---	---	1	---	---	---	---	---	1	1
	4-6	97+40 ISH	LT	R1-1	STOP	30 x 30	---	---	---	---	---	---	---	1	1	---	---
	4-7	99+30 ISH	LT	W1-7	DOUBLE NIGHT ARROW	48 x 24	---	8.00	---	2	---	---	---	---	---	1	1
	4-8	99+90 GA	LT	R1-1	STOP	30 x 30	5.18	---	1	---	---	---	---	---	---	1	1
	5-1	102+90 GA	RT	R2-1	SPEED LIMIT 35 MPH	24 x 30	5.00	---	---	1	---	---	---	---	---	1	1
	5-2	104+00 GA	LT	W11-2	PEDESTRIAN CROSSING	30 x 30	---	6.25	---	1	---	---	---	---	---	1	1
	5-2	104+00 GA	LT	W11-15P	TRAIL X-ING	24 x 18	---	3.00	---	---	---	---	---	---	---	1	---
	5-3	105+15 GA	LT	W3-1	STOP AHEAD	36 x 36	---	9.00	---	---	1	---	---	---	---	1	1
	5-4	110+50 GA	LT	R2-1	SPEED LIMIT 35 MPH	24 x 30	5.00	---	---	1	---	---	---	---	---	---	---
	5-5	114+15 GA	RT	R2-1	SPEED LIMIT 35 MPH	24 x 30	5.00	---	---	1	---	---	---	---	---	---	---
	5-6	124+00 GA	RT	W6-1	DIVIDED HIGHWAY AHEAD	36 x 36	---	9.00	---	2	---	---	---	---	---	---	---
	5-7	125+40 GA	LT	R2-1	SPEED LIMIT 35 MPH	24 x 30	5.00	---	---	1	---	---	---	---	---	1	1
	5-8	125+40 GA	RT	R2-1	SPEED LIMIT 25 MPH	24 x 30	5.00	---	---	1	---	---	---	---	---	---	---
	5-9	126+00 GA	LT	W6-3	TWO WAY TRAFFIC	36 x 36	---	9.00	---	---	1	---	---	---	---	---	---
	5-10	126+80 GA	RT	I2-3	LAKE DELTON POPULATION 2,914	72 x 24	12.00	---	---	2	---	---	---	---	---	3	2
	6-1	131+50 GA	RT	R1-1	STOP	30 x 30	5.18	---	---	---	---	1	---	---	---	1	1
	6-2	135+50 SU	LT	W4-2R	LANE REDUCTION TRANSITION	36 x 36	---	9.00	---	---	---	---	1	---	---	1	1
	6-3	143+20 SU	LT	R2-1	SPEED LIMIT 25 MPH	24 x 30	5.00	---	---	---	---	1	---	---	---	1	1
	6-4	144+20 ZAP	LT	R1-1	STOP	30 x 30	5.18	---	---	---	---	1	---	---	---	1	1
	6-5	145+00 ZAP	RT	R2-1	SPEED LIMIT 25 MPH	24 x 30	5.00	---	---	---	---	1	---	---	---	1	1
	6-6	152+10 ZAP	LT	R2-1	SPEED LIMIT 25 MPH	24 x 30	5.00	---	---	---	---	1	---	---	---	1	1
	6-7	153+50 ZAP	RT	R1-1	STOP	30 x 30	5.18	---	---	---	---	1	---	---	---	1	1
	6-8	153+60 ZAP	LT	R2-1	SPEED LIMIT 25 MPH	24 x 30	5.00	---	---	---	---	1	---	---	---	1	1
						TOTALS	152.90	94.75	5	27	3	7	1	1	1	30	27

UTILITY LINE OPENING (ULO)

CATEGORY	LOCATION	SPV.0060.21 EACH
0010	UNDISTRIBUTED	5

RAILING STEEL TYPE C2 GALVANIZED STA. 136+50 'SU'

CATEGORY	SPV.0105.03 LS
0010	1

3

ADJUST AND EXTERNAL WATERPROOF EXISTING SANITARY MANHOLE

CATEGORY	STATION	LOCATION	SPV.0060.07 EACH
0010	110+22 'GA'	22.0' LT	1

REPLACE ADJUSTMENT, ADJUST, AND EXTERNAL WATERPROOF EXISTING SANITARY MANHOLE

CATEGORY	STATION	LOCATION	SPV.0060.08 EACH
0010	102+15 'GA'	22.0' LT	1
	126+20 'GA'	22.0' LT	1
	151+97 'ZAP'	13.0' LT	1
		TOTAL	3

RECONSTRUCT MANHOLE, REPLACE ADJUSTMENT, ADJUST, AND EXTERNAL WATERPROOF EXISTING SANITARY MANHOLE

CATEGORY	STATION	LOCATION	SPV.0060.09 EACH
0010	106+18 'GA'	20.0' LT	1
	114+19 'GA'	21.0' LT	1
	118+19 'GA'	23.0' LT	1
	122+24 'GA'	21.0' LT	1
	150+23 'ZAP'	15.0' LT	1
		TOTAL	5

ADJUST EXISTING WATER VALVE BOX 6-INCHES OR LESS

CATEGORY	STATION	LOCATION	SPV.0060.10 EACH
0010	138+14 'SU'	2.0' LT	1
	147+05 'ZAP'	4.0' LT	1
		TOTAL	2

ADJUST EXISTING WATER VALVE BOX GREATER THAN 6-INCHES

CATEGORY	STATION	LOCATION	SPV.0060.11 EACH
0010	147+58 'ZAP'	3.0' LT	1
	149+09 'ZAP'	6.0' LT	1
	149+29 'ZAP'	1.0' LT	1
		TOTAL	3

ADJUST EXISTING HYDRANT

CATEGORY	STATION	LOCATION	SPV.0060.12 EACH
0010	127+74 'GA'	24.2' LT	1
	138+05 'SU'	2.0' LT	1
		TOTAL	2

REMOVE, SALVAGE, AND RELOCATE EXISTING HYDRANT

CATEGORY	STATION	LOCATION	SPV.0060.13 EACH
0010	143+45 'SU'	17.0' LT	1
	147+58 'ZAP'	20.8' LT	1
	149+65 'ZAP'	36.3' LT	1
		TOTAL	3

CONNECT TO EXISTING WATER MAIN

CATEGORY	STATION	LOCATION	SPV.0060.14 EACH
0010	143+33 'SU'	3.8' LT	1
	147+58 'ZAP'	2.0' LT	1
	149+34 'ZAP'	0.0' LT	1
		TOTAL	3

CONNECT TO EXISTING WATER SERVICE

CATEGORY	STATION	LOCATION	SPV.0060.15 EACH
0010	147+05 'ZAP'	4.0' LT	1
	147+05 'ZAP'	22.0' LT	1
	149+09 'ZAP'	5.0' LT	1
	149+09 'ZAP'	25.0' LT	1
		TOTAL	4

DUCTILE IRON BEND 45-DEGREE BEND

CATEGORY	STATION	LOCATION	SPV.0060.16 6-INCH EACH	SPV.0060.17 8-INCH EACH
0010	143+33 'SU'	3.8' LT	1	---
	147+05 'ZAP'	10.0' LT	4	---
	147+58 'ZAP'	10.0' LT	4	---
	149+09 'ZAP'	10.0' LT	4	---
	149+38 'ZAP'	2.0' LT	---	1
	149+48 'ZAP'	2.0' LT	---	1
		TOTALS	13	2

6-INCH WATER VALVE AND BOX

CATEGORY	STATION	LOCATION	SPV.0060.18 EACH
0010	150+12 'ZAP'	14.5' LT	1

8-INCH BY 6-INCH DUCTILE IRON TEE

CATEGORY	STATION	LOCATION	SPV.0060.19 EACH
0010	149+74 'ZAP'	17.9' LT	1

8-INCH WATER PLUG

CATEGORY	STATION	LOCATION	SPV.0060.20 EACH
0010	149+86 'ZAP'	38.5' LT	1

DUCTILE IRON WATER MAIN

CATEGORY	STATION TO STATION	LOCATION	SPV.0090.02 6-INCH LF	SPV.0090.03 8-INCH LF
0010	143+33 'SU' - 143+45 'SU'	LT	18	---
	147+05 'ZAP'	LT	20	---
	147+58 'ZAP'	LT	20	---
	149+09 'ZAP'	LT	20	---
	149+34 'ZAP' - 149+86 'ZAP'	LT	---	76
	149+65 'ZAP' - 149+74 'ZAP'	LT	22	---
		TOTAL	100	76

RIGID INSULATION

CATEGORY	STATION	OFFSET	SPV.0165.01 SF
0010	145+85 'ZAP'	0.0' LT	32
	147+05 'ZAP'	10.0' LT	32
	147+54 'ZAP'	0.0' LT	32
	147+58 'ZAP'	10.0' LT	32
	149+00 -149+34 'ZAP'	0.0' LT	160
	149+70 'ZAP'	24.5' LT	32
		TOTAL	320

STATE OF WISCONSIN
DEPARTMENT OF TRANSPORTATION

TRANSPORTATION PROJECT PLAT TITLE SHEET

PROJECT NO. 1674-00-20

LAKE DELTON - SAUK CITY ROAD

(FERN DELL ROAD - W. FRONTAGE ROAD)

SAUK COUNTY

THE NOTES, CONVENTIONAL SIGNS, AND ABBREVIATIONS ARE ASSOCIATED WITH EACH TRANSPORTATION PROJECT PLAT FOR PROJECT 1674-00-20.

NOTES:

DISTANCES SHOWN FROM THE RIGHT-OF-WAY LINE TO BUILDINGS ARE APPROXIMATE ONLY.

COORDINATES AND BEARINGS SHOWN ON THIS PLAT ARE REFERENCED TO THE WISCONSIN COUNTY COORDINATE SYSTEM, SAUK COUNTY ZONE, NAD83 (91) ADJUSTMENT. THE COORDINATES SHOWN ARE GRID COORDINATES AND ARE TO BE USED AS GRID OR GROUND VALUES ON THIS PLAT.

RIGHT-OF-WAY MONUMENTS ARE TYPE 2 (TYPICALLY ¾" X 24" REBARS) UNLESS OTHERWISE NOTED, AND WILL BE PLACED PRIOR TO THE COMPLETION OF THE PROJECT.

RIGHT-OF-WAY BOUNDARIES ARE DEFINED WITH COURSES OF THE PERIMETER OF THE HIGHWAY LANDS REFERENCED TO THE U.S. PUBLIC LAND SURVEY SYSTEM OR OTHER "SURVEYS OF PUBLIC RECORD".

PROPERTY LINES SHOWN ON THIS PLAT ARE DRAWN FROM DATA DERIVED FROM MAPS AND DOCUMENTS OF PUBLIC RECORD AND/OR EXISTING OCCUPATIONAL LINES. THIS PLAT MAY NOT BE A TRUE REPRESENTATION OF EXISTING PROPERTY LINES, EXCLUDING RIGHT-OF-WAY LINES, AND SHOULD NOT BE USED AS A SUBSTITUTE FOR AN ACCURATE FIELD SURVEY.

ALL RIGHT-OF-WAY LINES DEPICTED IN NON-ACQUISITION AREAS ARE INTENDED TO REESTABLISH EXISTING RIGHT-OF-WAY LINES AS DETERMINED FROM PREVIOUS PROJECTS, OTHER RECORDED DOCUMENTS, OR FROM CENTERLINE OF EXISTING PAVEMENT

DIMENSIONING FOR THE NEW R/W IS MEASURED ALONG AND PERPENDICULAR TO NEW REFERENCE LINES.

ACCESS TO BE CONSTRUCTED WITHIN THE LOCATION SPECIFIED. THE LOCATION SHOWN IS THE CENTER POINT OF THE DEFINED WIDTH, AND NOT NECESSARILY THE WIDTH OF THE PHYSICAL DRIVEWAY.

PARCEL IDENTIFICATION NUMBERS MAY NOT POINT TO ALL AREAS OF ACQUISITION, AS NOTED ON THE SCHEDULE OF LANDS & INTERESTS REQUIRED.

TEMPORARY LIMITED EASEMENT
A TEMPORARY LIMITED EASEMENT (TLE) IS A RIGHT FOR CONSTRUCTION PURPOSES, AS DEFINED HEREIN, INCLUDING THE RIGHT TO OPERATE NECESSARY EQUIPMENT THEREON AND THE RIGHT OF INGRESS AND EGRESS, AS LONG AS REQUIRED FOR SUCH PUBLIC PURPOSE, INCLUDING THE RIGHT TO PRESERVE, PROTECT, REMOVE, OR PLANT THEREON ANY VEGETATION THAT THE HIGHWAY AUTHORITIES MAY DEEM NECESSARY OR DESIRABLE. ALL TLEs EXPIRE AT THE COMPLETION OF THE CONSTRUCTION PROJECT FOR WHICH THIS INSTRUMENT IS GIVEN.

PERMANENT LIMITED EASEMENT
A PERMANENT LIMITED EASEMENT (PLE) IS A RIGHT FOR CONSTRUCTION AND MAINTENANCE PURPOSES, AS DEFINED HEREIN, INCLUDING THE RIGHT TO OPERATE NECESSARY EQUIPMENT THEREON AND THE RIGHT OF INGRESS AND EGRESS, AS LONG AS REQUIRED FOR SUCH PUBLIC PURPOSE, INCLUDING THE RIGHT TO PRESERVE, PROTECT, REMOVE, OR PLANT THEREON ANY VEGETATION THAT THE HIGHWAY AUTHORITIES MAY DEEM NECESSARY OR DESIRABLE. BUT WITHOUT PREJUDICE TO THE OWNER'S RIGHT TO MAKE OR CONSTRUCT IMPROVEMENT ON SAID LANDS OR TO FLATTEN THE SLOPES, PROVIDING SAID ACTIVITIES WILL NOT IMPAIR OR OTHERWISE ADVERSELY AFFECT THE HIGHWAY FACILITIES.

R-6-E

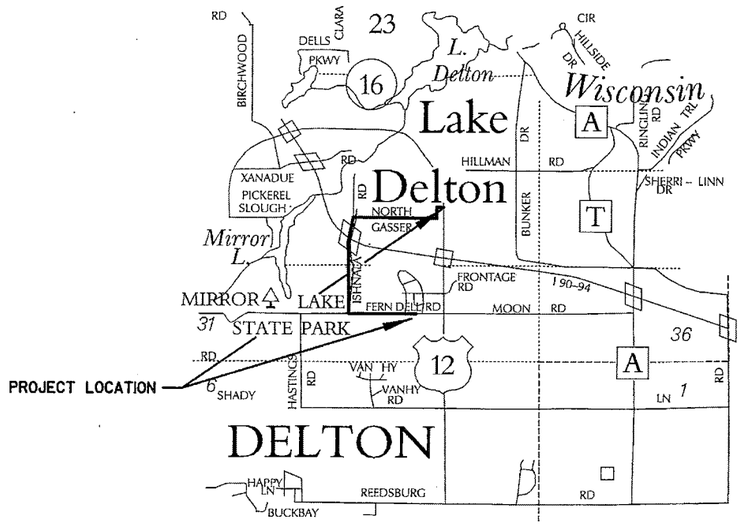

PROJECT LOCATION

T-13-N

N

LAYOUT

SCALE 0 1 MI. 2 MI.

CONVENTIONAL ABBREVIATIONS

ACCESS POINT	AP		
ACCESS RIGHTS	AR		
ACRES	AC.	REFERENCE LINE	R/L
AND OTHERS	ET.AL.	REMAINING	REM.
CENTERLINE	C/L	RIGHT-OF-WAY	R/W
CERTIFIED SURVEY MAP	CSM	SECTION	SEC.
CORNER	COR.	STATION	STA.
CONVEYANCE OF RIGHTS	CR	TEMPORARY LIMITED EASEMENT	TLE
DOCUMENT	DOC.	VOLUME	V.
EASEMENT	EASE.		
LAND CONTRACT	LC	**CURVE DATA**	
MONUMENT	MON.	LONG CHORD	LCH
PAGE	P.	LONG CHORD BEARING	LCB
PERMANENT LIMITED EASEMENT	PLE	RADIUS	R
PROPERTY LINE	PL	DEGREE OF CURVE	D
RECORDED AS	(100')	CENTRAL ANGLE OR DELTA	DELTA
HOUSE	H	LENGTH OF CURVE	L
GARAGE	G	TANGENT	TAN
SHED	S		

CONVENTIONAL SYMBOLS

FOUND IRON PIPE/PIN	⌀ (Ø UNLESS NOTED)	PROPOSED R/W LINE	
		EXISTING H.E. LINE	
R/W MONUMENT	● ⌀(SET)	PROPERTY LINE	
R/W STANDARD	▲ ⌀(SET)	LOT & TIE LINES	
SIGN	ISIGN	SLOPE INTERCEPTS	
SECTION CORNER MONUMENT	⊕	CORPORATE LIMITS	
SECTION CORNER SYMBOL	(SEC. COR. SYMBOL)	ACCESS RESTRICTED (BY PREVIOUS ACQUISITION/CONTROL)	
FEE (HATCH VARIES)		ACCESS RESTRICTED (BY ACQUISITION)	
TEMPORARY LIMITED EASEMENT		NO ACCESS (BY STATUTORY AUTHORITY)	
PERMANENT LIMITED EASEMENT		SECTION LINE	
R/W BOUNDARY POINT	(MON)	QUARTER LINE	
PARCEL NUMBER	(102)	SIXTEENTH LINE	
SIGN NUMBER (OFF PREMISE)	(21-2)	EXISTING RIGHT-OF-WAY LINE	
BUILDING		PROPOSED REFERENCE LINE	
		PARALLEL OFFSET	

CONVENTIONAL UTILITY SYMBOLS

WATER	W	
GAS	G	
TELEPHONE	T	
OVERHEAD TRANSMISSION LINES ELECTRIC	OH	
CABLE TELEVISION	TV	
FIBER OPTIC	FO	
SANITARY SEWER		
STORM SEWER	SS	
	NON COMPENSABLE	COMPENSABLE
POWER POLE		
TELEPHONE POLE		
TELEPHONE PEDESTAL		
ELECTRIC TOWER		

RESERVED FOR REGISTER OF DEEDS
PROJECT NUMBER 1674-00-20 - 4.01
SHEET 2 OF 2 OF DOCUMENT #1032936
IN D-279B

TRANSPORTATION PROJECT PLAT NO: 1674-00-20 - 4.01

PART OF THE SE¼- NE¼ AND NE¼- SE¼ OF SECTION 32, AND THE SW¼- NW¼ AND NW¼- SW¼ OF SECTION 33, ALSO PART OF LOT 1 OF C.S.M. 2596 AND LOT 1 OF C.S.M 2153 , ALL IN T13N, R6E, IN THE TOWN OF DELTON, SAUK COUNTY, WISCONSIN.

RELOCATION ORDER LAKE DELTON - SAUK CITY (FERN DELL ROAD - W. FRONTAGE ROAD) SAUK COUNTY

TO PROPERLY ESTABLISH, LAY OUT, WIDEN, ENLARGE, EXTEND, CONSTRUCT, RECONSTRUCT, IMPROVE, OR MAINTAIN A PORTION OF THE HIGHWAY DESIGNATED ABOVE, THE STATE OF WISCONSIN DEPARTMENT OF TRANSPORTATION DEEMS IT NECESSARY TO RELOCATE OR CHANGE SAID HIGHWAY AND ACQUIRE CERTAIN LANDS AND INTERESTS OR RIGHTS IN LANDS FOR THE ABOVE PROJECT.

TO EFFECT THIS CHANGE, PURSUANT TO AUTHORITY GRANTED UNDER SECTION 84.02 (3) AND 84.09, WISCONSIN STATUTES, THE DEPARTMENT OF TRANSPORTATION HEREBY ORDERS THAT:
1. THAT PORTION OF SAID HIGHWAY AS SHOWN ON THIS PLAT IS LAID OUT AND ESTABLISHED TO THE LINES AND WIDTHS AS SO SHOWN FOR THE ABOVE PROJECT.
2. THE LANDS OR INTERESTS OR RIGHTS IN LANDS AS SHOWN ON THIS PLAT ARE REQUIRED BY THE DEPARTMENT FOR THE ABOVE PROJECT AND SHALL BE ACQUIRED IN THE NAME OF THE STATE OF WISCONSIN, PURSUANT TO THE PROVISIONS OF SECTION 84.09 (1) OR (2), WISCONSIN STATUTES.

NOTE: "EXCLUDED FROM TLE IS ANY LAND THAT, AT THE TIME OF RECORDING OF THIS PLAT, IS OCCUPIED BY BUILDINGS SHOWN ON THIS PLAT"

SCHEDULE OF LANDS & INTERESTS REQUIRED

OWNERS NAMES ARE SHOWN FOR REFERENCE PURPOSES ONLY, AND ARE SUBJECT TO CHANGE PRIOR TO TRANSFER OF LAND INTEREST TO D.O.T.
ALL AREAS SHOWN IN ACRES UNLESS OTHERWISE NOTED.

PARCEL NUMBER	OWNER(S)	INTEREST REQUIRED	R/W ACRES REQUIRED NEW	EXISTING	TOTAL	TLE ACRES	PLE AC.	ME AC.
5	PIONEER PARK LTD	TLE	---	---	---	0.16	---	---
2	STATE OF WISCONSIN (DEPT. OF NATURAL RESOURCES)	FEE	0.13	---	0.13	---	---	---
3	WISCONSIN POWER & LIGHT COMPANY	TLE	---	---	---	0.07	---	---
4	ULYSSES & KENDA J. TAYLOR	TLE	---	---	---	0.02	---	---
41	ALLIANT ENERGY CORP.	RELEASE OF RIGHTS						
42	VERIZON	RELEASE OF RIGHTS						

ROAD NAME	BASIS OF EXISTING R/W	WIDTH
FERN DELL	C.S.M. 2596, 2153 AND FOUND IRONS	66'
ISHNALA ROAD	C.S.M. 3564, 773, 773 AND OTHER SURVEYS OF RECORD AND FOUND IRONS	66'

P.I. = STA. 47+94.39'FE'
Y = 270,450.41
X = 636,056.85

TOWN OF DELTON

SW-NW
33

HOLDING TANK AGREEMENT
REEL 202 IMAGE 734

460014
HARRISON MONUMENT
Y = 273,025.33
X = 635,916.22

T 13 N
29 28
32 33
R 6 E

ALLIANT ENERGY CORP.
OVERHEAD ELECTRIC
EASEMENT DOC. NO. 634476
PARCEL 2

SE-NE
32

VERIZON
BURIED CABLE

ISHI
45+62.25'FE'=
45+62.25'ISH'
Y : 270,499.60
X : 635,824.71

T.L.E.-SLOPES
0.02 AC.

T.L.E.-SLOPES
0.02 AC.

T.L.E.-SLOPES
0.12 AC.

PK NAIL
Y = 270,448.19
X = 638,605.94
73+43.48'FE'
1.47' RT

PIONEER PARK ENTRANCE SIGN

VERIZON
PEDESTAL & BURIED CABLE

MATCH LINE STA 59+00

N 89°57'42" W 2674.85'

44+00'FE' 45+00'FE' 46+00'FE' 47+00'FE' 48+00'FE' 49+00'FE' 50+00'FE' 51+00'FE' 52+00'FE' 53+00'FE' 54+00'FE' 55+00'FE' 56+00'FE' 57+00'FE' 58+00'FE' 59+00'FE'

N 89°33'59" E
REFERENCE LINE (NOT ON¼LINE)

N 89°57'01" E R.L.
P147+94.39'FE'

FERN DELL RD.

S 89°58'04" E
REFERENCE LINE (NOT ON¼LINE)

N 89°57'42" W 550.00'

ISHNALA RD.
47+00'ISH'

N 48°55'28" W 50.20'
N 0°08'51" W 15.92'
46+00'FE' 33.09' 49.00'

FEE8
FEE9

410015
BROKEN HARRISON MONUMENT
Y = 270,449.98
X = 635,931.10
46+68.63 FE
0.10' RT.

NE-SE
32

2501

S 89°51'20" W 199.84'

46+68.26'FE' 33.10'

46+00'FE' 33.51' 49.00'

FEE11
FEE10

40' W.P. & L. ELECTRIC
(ALLIANT ENERGY CORP.)
LINE EASEMENT
REEL 641 IMAGE 546

ALLIANT ENERGY CORP.
POWER POLE & EASEMENT

S 0°02'00" W 15.49'

53+50'FE' 33.51' N 74°22'03" W 85.40'
54+29.53'FE' 33.58' S 0°59'11" E 22.42'
54+30.33'FE' 56.00'

FEE61
12608
FEE220

RW700
¾" REBAR

55+00'FE' 37.00' 56.00'

56+75'FE' 37.00' 39.00'

57+75'FE' 33.62' 39.00'

SUBSTATION SIGN

RW701
¾" REBAR

T.L.E.-SLOPES
0.01 AC.

LOT 1
C.S.M. 2596
VOL. II C.S.M.'S P.2596/2596A

58+43'FE' 46.00' 33.56'

59+00'FE' 46.00' 33.56'

T.L.E.-DRIVEWAY
0.02 AC.

T.L.E.- DRIVEWAY AND SLOPES
0.06 AC.

ALLIANT ENERGY CORP.
POWER POLE, BURIED CABLE & EASEMENT

LOT 1
C.S.M. 2153
VOL. B C.S.M.'S P.2153

TOWN OF DELTON

NW-SW
33

SCALE, FEET
0 50 100

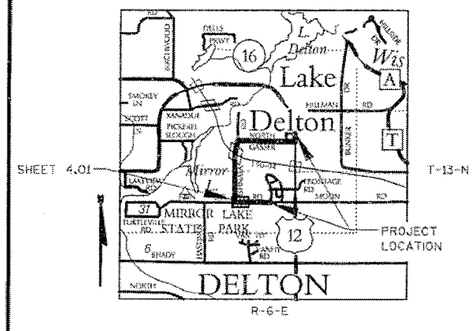

0 1 MI. 2 MI.
LOCATION MAP SCALE

COURSE TABLE			
POINT NUMBER	BEARING	DISTANCE	TO POINT NUMBER
FEE5	S 0°31'08" E	50.45'	FEE4
FEE4	S 44°20'59" E	52.91'	FEE3
410015	N 0°19'52" W	33.00'	2500
2501	N 1°14'24" W	33.01'	410015
11217	S 00°01'56" W	32.37'	11216
11216	S 00°01'56" W	00.63'	11218
11218	S 00°01'56" W	33.00'	80
2500	S 89°57'42" E	1231.58'	11217
2500	S 89°57'42" E	1231.58'	11217
FEE3	N 89°51'00" E	18.49'	FEE248
FEE248	S 00°19'51" E	11.10'	2500
80	N 89°57'42" W	470.07'	12608

SIGN NUMBER	SIGN OWNER
3-1	AMERICAN RV SALES
3-2	FISHER CONSTRUCTION (DURABILT HOMES)

STRAND ASSOCIATES, INC.®
910 WEST WINGRA DRIVE, MADISON, WI 53715
(608) 251-4843

I, TERRANCE L. GENSKE, REGISTERED LAND SURVEYOR, HEREBY CERTIFY THAT IN FULL COMPLIANCE WITH THE PROVISIONS OF SECTION 84.095 OF THE WISCONSIN STATUTES AND UNDER THE DIRECTION OF THE DEPARTMENT, I HAVE SURVEYED AND MAPPED TRANSPORTATION PROJECT PLAT 1674-00-20-4.01 AND THAT SUCH PLAT CORRECTLY REPRESENTS ALL EXTERIOR BOUNDARIES OF THE SURVEYED LAND.

WISCONSIN TERRANCE L. GENSKE S-1443 WAUNAKEE WI LAND SURVEYOR 5/31/11

(SIGNATURE) Terrance L. Genske DATE 5/31/11
(PRINTED NAME) Terrance L. Genske
(REGISTRATION NUMBER) S-1443

THIS PLAT AND RELOCATION ORDER ARE APPROVED FOR THE WISCONSIN DEPARTMENT OF TRANSPORTATION.
(SIGNATURE) James R. Kuehn DATE 5/31/2011
(PRINTED NAME) JAMES R. KUEHN

RESERVED FOR REGISTER OF DEEDS
PROJECT NUMBER 1674-00-20-4.01
SHEET 1 OF 2

ACCEPTED FOR RECORDING AND FILING IN THE OFFICE OF THE REGISTER OF DEEDS IN SAUK COUNTY, WISCONSIN AT 12:50 PM ON JUNE 3, 2011 AS DOCUMENT #1032936 AND FILED IN D-279B

THE ORIGINAL DOCUMENT WAS SIGNED BY BRENT BAILEY (R.O.D.)

FILE NAME : c:\MAD\1000--1099\1089\150\Micros\Design\Ishnala Bikepath\TPP\040401_rp.dgn PLOT DATE : 5/31/2011 PLOT BY : $$...plotuser...$$ PLOT NAME : PLOT SCALE : $$.....plotscale.....$$

TRANSPORTATION PROJECT PLAT NO: 1674-00-20 - 4.02

PART OF THE NE¼- SW ¼, THE NW¼- SW¼AND THE SW¼- NW¼ OF SECTION 33, IN THE TOWN OF DELTON; ALSO PART OF THE SE¼- NW¼ OF SECTION 33, IN THE VILLAGE OF LAKE DELTON; ALSO PART OF LOT 1 OF C.S.M. 916, LOT 1 OF C.S.M. 1045, LOT 1 OF C.S.M. 1073 AND LOT 2 OF CSM 2543; ALL IN T13N, R6E, IN THE TOWN OF DELTON, SAUK COUNTY, WISCONSIN.

RELOCATION ORDER LAKE DELTON - SAUK CITY (FERN DELL ROAD - W. FRONTAGE ROAD) SAUK COUNTY

TO PROPERLY ESTABLISH, LAY OUT, WIDEN, ENLARGE, EXTEND, CONSTRUCT, RECONSTRUCT, IMPROVE, OR MAINTAIN A PORTION OF THE HIGHWAY DESIGNATED ABOVE, THE STATE OF WISCONSIN DEPARTMENT OF TRANSPORTATION DEEMS IT NECESSARY TO RELOCATE OR CHANGE SAID HIGHWAY AND ACQUIRE CERTAIN LANDS AND INTERESTS OR RIGHTS IN LANDS FOR THE ABOVE PROJECT.

TO EFFECT THIS CHANGE, PURSUANT TO AUTHORITY GRANTED UNDER SECTION 84.02 (3) AND 84.09, WISCONSIN STATUTES, THE DEPARTMENT OF TRANSPORTATION HEREBY ORDERS THAT:
1. THAT PORTION OF SAID HIGHWAY AS SHOWN ON THIS PLAT IS LAID OUT AND ESTABLISHED TO THE LINES AND WIDTHS AS SO SHOWN FOR THE ABOVE PROJECT.
2. THE LANDS OR INTERESTS OR RIGHTS IN LANDS AS SHOWN ON THIS PLAT ARE REQUIRED BY THE DEPARTMENT FOR THE ABOVE PROJECT AND SHALL BE ACQUIRED IN THE NAME OF THE STATE OF WISCONSIN, PURSUANT TO THE PROVISIONS OF SECTION 84.09 (1) OR (2), WISCONSIN STATUTES.

SCHEDULE OF LANDS & INTERESTS REQUIRED

OWNERS NAMES ARE SHOWN FOR REFERENCE PURPOSES ONLY, AND ARE SUBJECT TO CHANGE PRIOR TO TRANSFER OF LAND INTEREST TO D.O.T.
ALL AREAS SHOWN IN ACRES UNLESS OTHERWISE NOTED.

PARCEL NUMBER	OWNER(S)	INTEREST REQUIRED	R/W ACRES REQUIRED NEW	EXISTING	TOTAL	TLE ACRES	PLE AC.	HE AC.
6	DALE E. HORSTMAN	PLE,TLE	---	---	---	0.07	0.01	---
7	LAVINIA ALAN	TLE	---	---	---	0.01	---	---
8	WISCONSIN WINNEBAGO TRIBE	TLE	---	---	---	0.05	---	---
9	JEFFREY A. SCHWIEGER	TLE	---	---	---	0.01	---	---
11	ROSMAN & RCM, LLC.	PLE,TLE	---	---	---	0.11	0.01	---
41	ALLIANT ENERGY CORP.	RELEASE OF RIGHTS						
42	VERIZON	RELEASE OF RIGHTS						

P.I. = STA. 67+14.88'FE'
Y = 270,449.328
X = 637,977.343
DELTA = 0°03'45" LT

ROAD NAME	BASIS OF EXISTING R/W	WIDTH
FERN DELL ROAD	C.S.M. 916, 1045, 1073 AND FOUND IRONS	66'

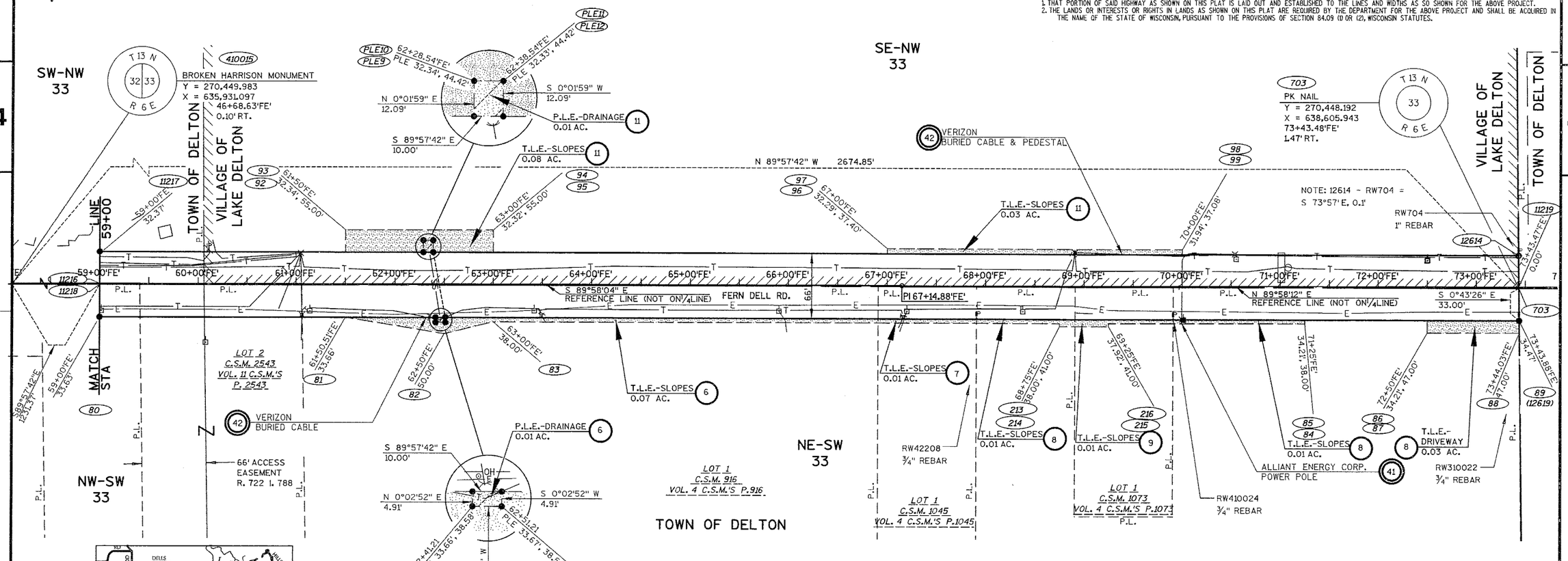

COURSE TABLE				COURSE TABLE			
POINT NUMBER	BEARING	DISTANCE	TO POINT NUMBER	POINT NUMBER	BEARING	DISTANCE	TO POINT NUMBER
PLE11	S 89°58'17" E	10.00'	PLE10	12619	N 89°57'42" W	1443.91'	80
PLE9	N 89°57'42" W	78.54'	92	80	N 00°01'56" E	33.00'	11218
11218	N 00°01'56" E	0.63'	11216	PLE13	N 89°57'42" W	341.22'	80
12619	N 89°57'42" W	1092.70'	PLE16	80	N 00°01'56" E	33.00'	11218
11217	S 89°57'42" E	328.54'	PLE9	11218	N 00°01'56" E	0.63'	11216
PLE12	S 89°57'42" E	1104.58'	12614	11216	N 00°01'56" E	32.37'	11217
11216	N 00°01'56" E	32.37'	11217				
11217	S 89°57'42" E	1443.12'	12614				
12614	S 00°35'06" E	31.54'	11219				
11219	S 00°35'06" E	1.46'	703				

SCALE, FEET
0 50 100

FOR ADDITIONAL INFORMATION REFER TO THE TITLE SHEET, RECORDED IN THE OFFICE OF THE REGISTER OF DEEDS IN SAUK COUNTY AS SHEET 2 OF 2 OF DOCUMENT NUMBER 1032936 AND FILED IN D-279B.

STRAND ASSOCIATES, INC.®
910 WEST WINGRA DRIVE, MADISON, WI 53715
(608) 251-4843

I, TERRANCE L. GENSKE, REGISTERED LAND SURVEYOR, HEREBY CERTIFY THAT IN FULL COMPLIANCE WITH THE PROVISIONS OF SECTION 84.095 OF THE WISCONSIN STATUTES AND UNDER THE DIRECTION OF THE DEPARTMENT, I HAVE SURVEYED AND MAPPED TRANSPORTATION PROJECT PLAT 1674-00-20-4.02 AND THAT SUCH PLAT CORRECTLY REPRESENTS ALL EXTERIOR BOUNDARIES OF THE SURVEYED LAND.

WISCONSIN TERRANCE L. GENSKE S-1443 WAUNAKEE WI LAND SURVEYOR

(SIGNATURE) _____ DATE 6/6/2011
(PRINTED NAME) Terrance L. Genske
(REGISTRATION NUMBER) S-1443

THIS PLAT AND RELOCATION ORDER ARE APPROVED FOR THE WISCONSIN DEPARTMENT OF TRANSPORTATION.
(SIGNATURE) _____ DATE 06/15/11
(PRINTED NAME) JAMES R. KUEHN

RESERVED FOR REGISTER OF DEEDS
PROJECT NUMBER 1674-00-20-4.02

ACCEPTED FOR RECORDING AND FILING IN THE OFFICE OF THE REGISTER OF DEEDS IN SAUK COUNTY, WISCONSIN AT 1:00 P.M. ON JUNE 28, 2011 AS DOCUMENT #1034389 AND FILED IN D-279D

ORIGINAL DOCUMENT SIGNED BY BRENT BAILEY (R.O.D.)

FILE NAME : s:\MAD\1000--1099\1089\150\Micros\Design\Ishnala Bikepath\TPP\040402_rp.dgn PLOT DATE : 6/9/2011 PLOT BY : $$...plotuser...$$ PLOT NAME : PLOT SCALE : $$.....plotscale.....$$

TRANSPORTATION PROJECT PLAT NO: 1674-00-20 - 4.03

PART OF THE SW¼- NE¼ AND NW¼- SE¼ OF SECTION 33, ALSO PART OF LOT 1 OF C.S.M. 2835 AND LOTS 71, 72, 73, 74 AND OUTLOT 1 OF THE PLAT OF WEST ADDITION TO YELLOW THUNDER VALLEY SUBDIVISION, ALL IN T13N, R6E, THE TOWN OF DELTON, SAUK COUNTY, WISCONSIN.

RELOCATION ORDER LAKE DELTON - SAUK CITY (FERN DELL ROAD - W. FRONTAGE ROAD) SAUK COUNTY

TO PROPERLY ESTABLISH, LAY OUT, WIDEN, ENLARGE, EXTEND, CONSTRUCT, RECONSTRUCT, IMPROVE, OR MAINTAIN A PORTION OF THE HIGHWAY DESIGNATED ABOVE, THE STATE OF WISCONSIN DEPARTMENT OF TRANSPORTATION DEEMS IT NECESSARY TO RELOCATE OR CHANGE SAID HIGHWAY AND ACQUIRE CERTAIN LANDS AND INTERESTS OR RIGHTS IN LANDS FOR THE ABOVE PROJECT.

TO EFFECT THIS CHANGE, PURSUANT TO AUTHORITY GRANTED UNDER SECTION 84.02 (3) AND 84.09, WISCONSIN STATUTES, THE DEPARTMENT OF TRANSPORTATION HEREBY ORDERS THAT:
1. THAT PORTION OF SAID HIGHWAY AS SHOWN ON THIS PLAT IS LAID OUT AND ESTABLISHED TO THE LINES AND WIDTHS AS SO SHOWN FOR THE ABOVE PROJECT.
2. THE LANDS OR INTERESTS OR RIGHTS IN LANDS AS SHOWN ON THIS PLAT ARE REQUIRED BY THE DEPARTMENT FOR THE ABOVE PROJECT AND SHALL BE ACQUIRED IN THE NAME OF THE STATE OF WISCONSIN, PURSUANT TO THE PROVISIONS OF SECTION 84.09 (1) OR (2), WISCONSIN STATUTES.

SCHEDULE OF LANDS & INTERESTS REQUIRED

OWNERS NAMES ARE SHOWN FOR REFERENCE PURPOSES ONLY, AND ARE SUBJECT TO CHANGE PRIOR TO TRANSFER OF LAND INTEREST TO D.O.T.
ALL AREAS SHOWN IN ACRES UNLESS OTHERWISE NOTED.

PARCEL NUMBER	OWNER(S)	INTEREST REQUIRED	R/W ACRES REQUIRED NEW	EXISTING	TOTAL	TLE ACRES	PLE AC.	HE AC.
8	WISCONSIN WINNEBAGO TRIBE	TLE	---	---	---	0.02	---	---
12	JAMES P. THOMPSON & SHARON E. THOMPSON	TLE	---	---	---	0.03	---	---
13	BRANDON E. WEGNER & KIMBERLY TAYLOR	PLE, TLE	---	---	---	0.08	0.01	---
16	GISELA CASEY CSATARI	TLE	---	---	---	0.03	---	---
17	JANE WELLS	TLE	---	---	---	0.02	---	---
41	ALLIANT ENERGY CORP.	RELEASE OF RIGHTS						
42	VERIZON	RELEASE OF RIGHTS						
43	CENTURYLINK	RELEASE OF RIGHTS						

P.I. =STA. 82+95.62
Y = 270,450.16
X = 639,558.08

SW-NE 33

NOTE: THERE ARE 10-FOOT UN-NAMED UTILITY EASEMENTS ADJACENT TO ALL LOT LINES IN THE PLAT OF WEST ADDITION TO YELLOW THUNDER.

CURVE BP4 1
L.C. = 27.22'
L.C.B.=N 62°25'09" E
R. = 30'
L. = 28.26'

531
NO MONUMENT
COORDINATE PROVIDED
BY COUNTY SURVEYOR
Y= 270,451.39
X= 641,261.44

T 13 N
33 34
R 6 E

PLE18 76+47.62'FE' PLE 42.39'
PLE19 76+57.62'FE' PLE 42.42'
N 0°09'33" W 10.07'
S 0°09'33" E 10.07'
76+47.64'FE' PLE 32.32'
76+57.64'FE' PLE 32.34'
PLE17
PLE20
OH
P.L.E.-DRAINAGE 0.01 AC.
S 89°50'45" W 10.00'

RW410020 ¾" REBAR
RW410019 ¾" REBAR
RW410018 ¾" REBAR
74+43.39'FE' 31.79'
75+43.45'FE' 32.10'
77+83.32'FE' 32.61'

SE-NW 33

NOTE: 12614 - RW704 = S 73°57' E, 0.1'

VILLAGE OF LAKE DELTON
TOWN OF DELTON

LOT 71 LOT 72 LOT 73 LOT 74 LOT 75 OUTLOT 1
VERIZON PEDESTAL
WEST ADDITION TO YELLOW THUNDER VALLEY SUBDIVISION
T.L.E.-SLOPES 0.03 AC. 0.04 AC. 0.04 AC. 0.03 AC.
T.L.E.-SLOPES 0.02 AC.
N 89°49'27" E 100.24'
N 89°55'52" E 2,655.50'
77+50'FE' 32.54', 47.63'
80+20'FE' 33.24', 46.00'
81+09.75 46.00'
80+85.62 33.41'
RW410025 1" REBAR
RW11976 1" REBAR
410025
CURVE BP4-1
YELLOW THUNDER TRAIL
66'

12614 101 100 73+43.16'FE' 31.53' 73+50'FE' 31.55', 47.00'
RW704 1" REBAR N 00°35'06" W 33.00'

72+00'FE' 73+00'FE' 74+00'FE' 75+00'FE' 76+00'FE' 77+00'FE' 78+00'FE' 79+00'FE' 80+00'FE' 81+00'FE'
PI 82+95.62'FE'

N 00°43'26" W 33.00'
P.L. RW702 PK P.L.
N 89°58'12" E REFERENCE LINE (NOT ON ¼ LINE)
FERN DELL RD. 11214 TIE4 S 00°02'31" E 32.13'
S 89°51'39" W 690.65'
R/W VARIES (66')

RW310022 ¾" REBAR
RW310023 ¾" REBAR
703 12619 6364 7755
73+43.89 34.47' S 89°54'39" W 65.95' 74+09.83 34.40'
75+50'FE' 34.13', 41.00' 77+00'FE' 33.84', 41.00'
104 105 8 T.L.E.-SLOPES 0.02 AC. 107 106

41 ALLIANT ENERGY CORP. UNDERGROUND ELEC. 20-FOOT EASEMENT AND BURIED CABLE DOC. NO. 701167

CENTURYLINK 16.5-FOOT R/W GRANT R. 518 I. 875 43
81+00.97 33.08'

R/W ACQUIRED UNDER PROJECT 1674-00-21
S 89°55'52" W 1,889.19'

PK NAIL
Y = 270,448.192
X = 638,605.943
73+43.48
1.47' RT.
(PREVIOUSLY SHOWN AS Y=270448.14 X=638605.89 ON ID 1674-00-21 AS A COMPUTED LOCATION ONLY

NE-SW 33

LOT 1 C.S.M. 2835 VOL. 13 C.S.M.'S P.2835

NW-SE 33

TOWN OF DELTON

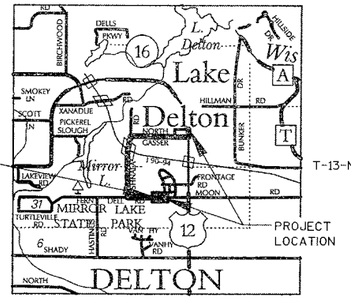

COURSE TABLE			
POINT NUMBER	BEARING	DISTANCE	TO POINT NUMBER
PLE18	N 89°50'22" E	10.00'	PLE19
410020	N 89°47'41" E	100.06'	410019
7755	S 89°51'39" W	690.65'	6364
TIE4	S 89°55'52" W	9.32'	11214
410018	N 89°49'11" E	302.30'	410025
410019	N 89°50'45" E	239.86'	410018
410019	N 89°50'45" E	104.19'	PLE17
PLE20	N 89°50'45" E	125.68'	410018
110	S 00°04'08" E	46.94'	TIE4

ROAD NAME	BASIS OF EXISTING R/W	WIDTH
FERN DELL (SOUTH SIDE)	C.S.M. 2835, FOUND IRONS & PREVIOUS PROJECT ID 1674-00-21	VARIES (66')
FERN DELL (NORTH SIDE)	FOUND IRONS FROM PLAT OF WEST ADDITION TO YELLOW THUNDER VALLEY	VARIES (66')
YELLOW THUNDER TRAIL	PLAT OF WEST ADDITION TO YELLOW THUNDER VALLEY	66'

FOR ADDITIONAL INFORMATION REFER TO THE TITLE SHEET, RECORDED IN THE OFFICE OF THE REGISTER OF DEEDS IN SAUK COUNTY AS SHEET 2 OF 2 OF DOCUMENT NUMBER 1032936 AND FILED IN D-2798.

SCALE, FEET
0 50 100

STRAND ASSOCIATES, INC.®
910 WEST WINGRA DRIVE, MADISON, WI 53715
(608) 251-4843

I, TERRANCE L. GENSKE, REGISTERED LAND SURVEYOR, HEREBY CERTIFY THAT IN FULL COMPLIANCE WITH THE PROVISIONS OF SECTION 84.095 OF THE WISCONSIN STATUTES AND UNDER THE DIRECTION OF THE DEPARTMENT, I HAVE SURVEYED AND MAPPED TRANSPORTATION PROJECT PLAT 1674-00-20-4.03 AND THAT SUCH PLAT CORRECTLY REPRESENTS ALL EXTERIOR BOUNDARIES OF THE SURVEYED LAND.

WISCONSIN TERRANCE L. GENSKE S-1443 WAUNAKEE WI LAND SURVEYOR 6/8/2011

(SIGNATURE) _____ DATE 6/8/2011
(PRINTED NAME) Terrance L. Genske
(REGISTRATION NUMBER) S-1443

THIS PLAT AND RELOCATION ORDER ARE APPROVED FOR THE WISCONSIN DEPARTMENT OF TRANSPORTATION.
(SIGNATURE) _____ DATE 06/15/11
(PRINTED NAME) JAMES R. KUICHA

RESERVED FOR REGISTER OF DEEDS
PROJECT NUMBER 1674-00-20-4.03

ACCEPTED FOR RECORDING AND FILING IN THE OFFICE OF THE REGISTER OF DEEDS IN SAUK COUNTY, WISCONSIN AT 1:00 P.M. ON JUNE 28, 2011 AS DOCUMENT #1034390 AND FILED IN D-279E

ORIGINAL DOCUMENT SIGNED BY BRENT BAILEY (R.O.D.)

FILE NAME : s:\MAD\1000--1099\1089\150\Micros\Design\Ishnala Bikepath\TPP\040403_rp.dgn PLOT DATE : 6/9/2011 PLOT BY : $$...plotuser...$$ PLOT NAME : PLOT SCALE : $$.....plotscale.....$$

TRANSPORTATION PROJECT PLAT NO: 1674-00-20 - 4.04

PART OF THE SE¼- NE¼ OF SECTION 32 AND THE SW¼- NW¼ OF SECTION 33, ALL IN T13E, R6E, THE TOWN OF DELTON, SAUK COUNTY, WISCONSIN.

RELOCATION ORDER LAKE DELTON - SAUK CITY (FERN DELL ROAD - W. FRONTAGE ROAD) SAUK COUNTY

TO PROPERLY ESTABLISH, LAY OUT, WIDEN, ENLARGE, EXTEND, CONSTRUCT, RECONSTRUCT, IMPROVE, OR MAINTAIN A PORTION OF THE HIGHWAY DESIGNATED ABOVE, THE STATE OF WISCONSIN DEPARTMENT OF TRANSPORTATION DEEMS IT NECESSARY TO RELOCATE OR CHANGE SAID HIGHWAY AND ACQUIRE CERTAIN LANDS AND INTERESTS OR RIGHTS IN LANDS FOR THE ABOVE PROJECT.

TO EFFECT THIS CHANGE, PURSUANT TO AUTHORITY GRANTED UNDER SECTION 84.02 (3) AND 84.09, WISCONSIN STATUTES, THE DEPARTMENT OF TRANSPORTATION HEREBY ORDERS THAT:
1. THAT PORTION OF SAID HIGHWAY AS SHOWN ON THIS PLAT IS LAID OUT AND ESTABLISHED TO THE LINES AND WIDTHS AS SO SHOWN FOR THE ABOVE PROJECT.
2. THE LANDS OR INTERESTS OR RIGHTS IN LANDS AS SHOWN ON THIS PLAT ARE REQUIRED BY THE DEPARTMENT FOR THE ABOVE PROJECT AND SHALL BE ACQUIRED IN THE NAME OF THE STATE OF WISCONSIN, PURSUANT TO THE PROVISIONS OF SECTION 84.09 (1) OR (2), WISCONSIN STATUTES.

SCHEDULE OF LANDS & INTERESTS REQUIRED

OWNERS NAMES ARE SHOWN FOR REFERENCE PURPOSES ONLY, AND ARE SUBJECT TO CHANGE PRIOR TO TRANSFER OF LAND INTEREST TO D.O.T.
ALL AREAS SHOWN IN ACRES UNLESS OTHERWISE NOTED.

PARCEL NUMBER	OWNER(S)	INTEREST REQUIRED	R/W ACRES REQUIRED NEW	EXISTING	TOTAL	TLE ACRES	PLE AC.	HE AC.
5	PIONEER PARK LTD.	PLE, TLE	---	---	---	0.06	0.01	---
2	STATE OF WISCONSIN (DEPT. OF NATURAL RESOURCES)	FEE	0.19	---	0.19	---	---	---
41	ALLIANT ENERGY CORP.	RELEASE OF RIGHTS						
42	VERIZON	RELEASE OF RIGHTS						

P.I. = STA. 48+74.93'ISH'
Y = 270,760.034
X = 635,863.799
DELTA=1°55'16" LT.

P.I. = STA. 52+97.65'ISH'
Y = 271,180.973
X = 635,902.552
DELTA=1°07'18" RT

P.I. = STA. 55+79.28'ISH'
Y = 271,460.859
X = 635,933.855
DELTA=0°46'00" LT.

ROAD NAME	BASIS OF EXISTING R/W	WIDTH
FERN DELL	C.S.M. 2596, 2153 AND FOUND IRONS	66'
ISHNALA ROAD	C.S.M. 3564, 773, 773 AND OTHER SURVEYS OF RECORD AND FOUND IRONS	66'

SIGN NUMBER	SIGN OWNER
2-1	ISHNALA SUPPER CLUB SIGN

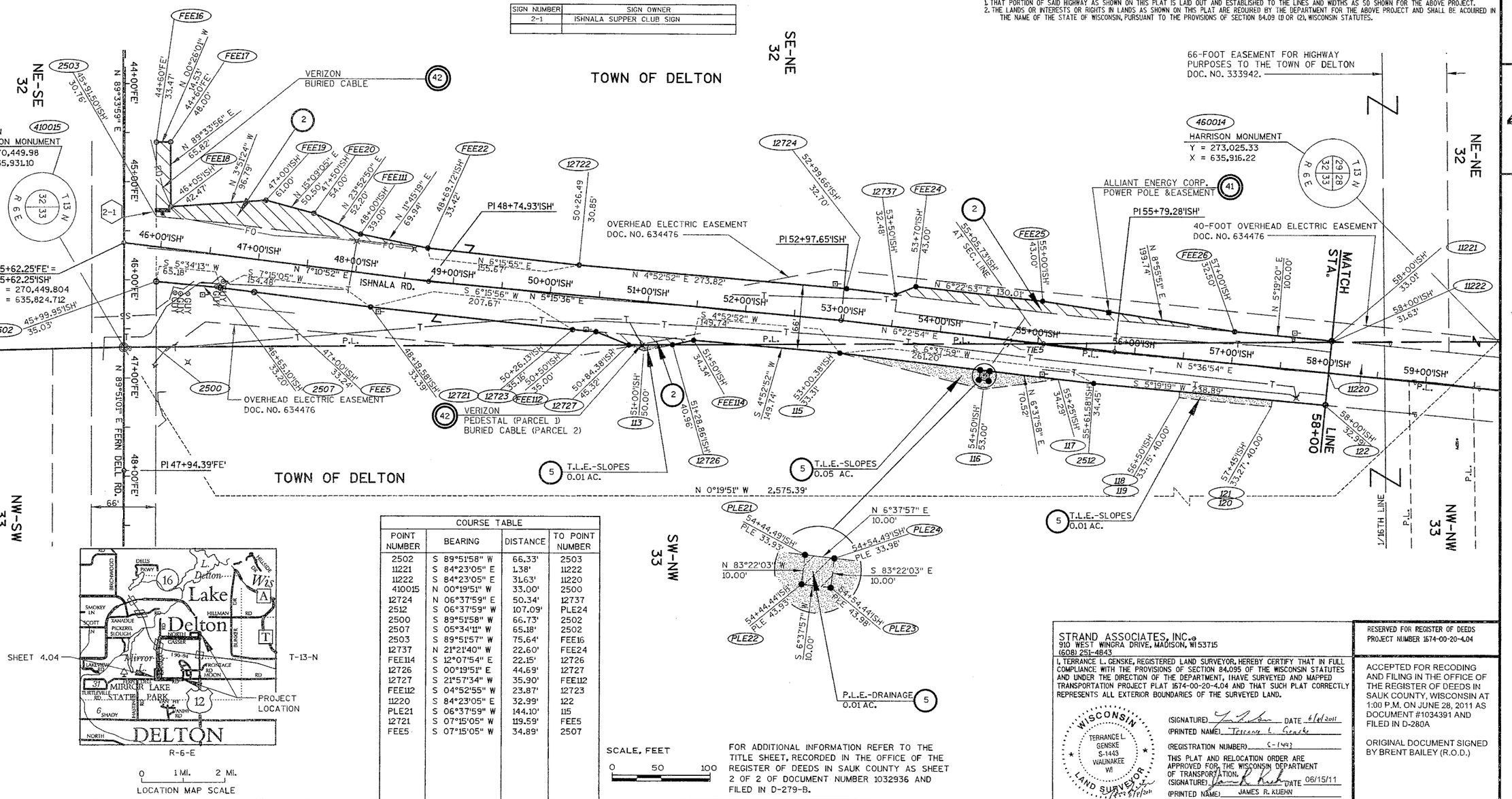

COURSE TABLE			
POINT NUMBER	BEARING	DISTANCE	TO POINT NUMBER
2502	S 89°51'58" W	66.33'	2503
11221	S 84°23'05" E	1.38'	11222
11222	S 84°23'05" E	31.63'	11220
410015	N 00°19'51" W	33.00'	2500
12724	N 06°37'59" E	50.34'	12737
2512	S 06°37'59" W	107.09'	PLE24
2500	S 89°51'58" W	66.73'	2502
2507	S 05°34'11" W	65.18'	2502
2503	S 89°51'57" W	75.64'	FEE16
12737	N 21°21'40" W	22.60'	FEE24
FEE114	S 12°07'54" E	22.15'	12726
12726	S 00°19'51" E	44.69'	12727
12727	S 21°57'34" W	35.90'	FEE112
FEE112	S 04°52'55" W	23.87'	12723
11220	S 84°23'05" E	32.99'	122
PLE21	S 06°37'59" W	144.10'	115
12721	S 07°15'05" W	119.59'	FEE5
FEE5	S 07°15'05" W	34.89'	2507

FOR ADDITIONAL INFORMATION REFER TO THE TITLE SHEET, RECORDED IN THE OFFICE OF THE REGISTER OF DEEDS IN SAUK COUNTY AS SHEET 2 OF 2 OF DOCUMENT NUMBER 1032936 AND FILED IN D-279-B.

STRAND ASSOCIATES, INC.®
910 WEST WINGRA DRIVE, MADISON, WI 53715
(608) 251-4843

I, TERRANCE L. GENSKE, REGISTERED LAND SURVEYOR, HEREBY CERTIFY THAT IN FULL COMPLIANCE WITH THE PROVISIONS OF SECTION 84.095 OF THE WISCONSIN STATUTES AND UNDER THE DIRECTION OF THE DEPARTMENT, I HAVE SURVEYED AND MAPPED TRANSPORTATION PROJECT PLAT 1674-00-20-4.04 AND THAT SUCH PLAT CORRECTLY REPRESENTS ALL EXTERIOR BOUNDARIES OF THE SURVEYED LAND.

WISCONSIN TERRANCE L. GENSKE S-1443 WAUNAKEE WI LAND SURVEYOR 6/9/2011

(SIGNATURE) _____ DATE 6/9/2011
(PRINTED NAME) Terrance L. Genske
(REGISTRATION NUMBER) S-1443

THIS PLAT AND RELOCATION ORDER ARE APPROVED FOR THE WISCONSIN DEPARTMENT OF TRANSPORTATION.
(SIGNATURE) _____ DATE 06/15/11
(PRINTED NAME) JAMES R. KUEHN

RESERVED FOR REGISTER OF DEEDS
PROJECT NUMBER 1674-00-20-4.04

ACCEPTED FOR RECODING AND FILING IN THE OFFICE OF THE REGISTER OF DEEDS IN SAUK COUNTY, WISCONSIN AT 1:00 P.M. ON JUNE 28, 2011 AS DOCUMENT #1034391 AND FILED IN D-280A

ORIGINAL DOCUMENT SIGNED BY BRENT BAILEY (R.O.D.)

FILE NAME : s:\MAD\1000--1099\1089\150\Micros\Design\Ishnala Bikepath\TPP\040404_rp.dgn PLOT DATE : 6/9/2011 PLOT BY : $$...plotuser...$$ PLOT NAME : PLOT SCALE : $$.....plotscale.....$$

TRANSPORTATION PROJECT PLAT NO: 1674-00-20 - 4.05

PART OF THE SE¼- NE¼OF SECTION 32, AND PART OF THE SW¼- NW¼ AND NW¼- NW¼ OF SECTION 33, AND THE SW¼- SW¼ OF SECTION 28, ALSO PART OF LOTS 1& 2 OF C.S.M. 3564, LOT 1OF CSM 773 AND LOT 1OF CSM 151, ALL IN T13N, R6E, THE TOWN OF DELTON, SAUK COUNTY, WISCONSIN.

RELOCATION ORDER LAKE DELTON - SAUK CITY (FERN DELL ROAD - W. FRONTAGE ROAD) SAUK COUNTY

TO PROPERLY ESTABLISH, LAY OUT, WIDEN, ENLARGE, EXTEND, CONSTRUCT, RECONSTRUCT, IMPROVE, OR MAINTAIN A PORTION OF THE HIGHWAY DESIGNATED ABOVE, THE STATE OF WISCONSIN DEPARTMENT OF TRANSPORTATION DEEMS IT NECESSARY TO RELOCATE OR CHANGE SAID HIGHWAY AND ACQUIRE CERTAIN LANDS AND INTERESTS OR RIGHTS IN LANDS FOR THE ABOVE PROJECT.

TO EFFECT THIS CHANGE, PURSUANT TO AUTHORITY GRANTED UNDER SECTION 84.02 (3) AND 84.09, WISCONSIN STATUTES, THE DEPARTMENT OF TRANSPORTATION HEREBY ORDERS THAT:
1. THAT PORTION OF SAID HIGHWAY AS SHOWN ON THIS PLAT IS LAID OUT AND ESTABLISHED TO THE LINES AND WIDTHS AS SO SHOWN FOR THE ABOVE PROJECT.
2. THE LANDS OR INTERESTS OR RIGHTS IN LANDS AS SHOWN ON THIS PLAT ARE REQUIRED BY THE DEPARTMENT FOR THE ABOVE PROJECT AND SHALL BE ACQUIRED IN THE NAME OF THE STATE OF WISCONSIN, PURSUANT TO THE PROVISIONS OF SECTION 84.09 (1) OR (2), WISCONSIN STATUTES.

SCHEDULE OF LANDS & INTERESTS REQUIRED

OWNERS NAMES ARE SHOWN FOR REFERENCE PURPOSES ONLY, AND ARE SUBJECT TO CHANGE PRIOR TO TRANSFER OF LAND INTEREST TO D.O.T.
ALL AREAS SHOWN IN ACRES UNLESS OTHERWISE NOTED.

PARCEL NUMBER	OWNER(S)	INTEREST REQUIRED	R/W ACRES REQUIRED NEW	EXISTING	TOTAL	TLE AC.	PLE AC.	HE AC.
5	PIONEER PARK LTD.	TLE	---	---	---	0.01	---	---
18	CONROY R., SR. & JANET S. GREENDEER	TLE	---	---	---	0.01	---	---
19	YVONNE LEE BRYLLA	TLE	---	---	---	0.01	---	---
22	DOREEN D. KISSACK	TLE	---	---	---	0.06	---	---
23	LARRY KISSACK	TLE	---	---	---	0.01	---	---
2	STATE OF WISCONSIN (DEPT. OF NATURAL RESOURCES)	FEE	0.12	---	0.12	---	---	---
41	ALLIANT ENERGY CORP.	RELEASE OF RIGHTS						

P.I. = 71+90.36'ISH'
Y = 273,064.82
X = 636,084.52
DELTA = 22°24'00" (LT)
D = 14°04'39"
T = 80.59'
L = 159.12'
R = 407.00'
P.C. = 71+09.77'ISH'
P.T. = 72+68.89'ISH'

P.I. = 68+30.05'ISH'
Y = 272,705.621
X = 636,056.237
DELTA=1°06'45" LT.

ROAD NAME	BASIS OF EXISTING R/W	WIDTH
ISHNALA RD.	C.S.M. 3564, 151, 773 AND OTHER SURVEYS OF RECORD & FOUND IRONS	66'

TOWN OF DELTON

NE-NE 32

SE-NE 32

SE-SE 29

SW-NW 33

NW-NW 33

SW-SW 28

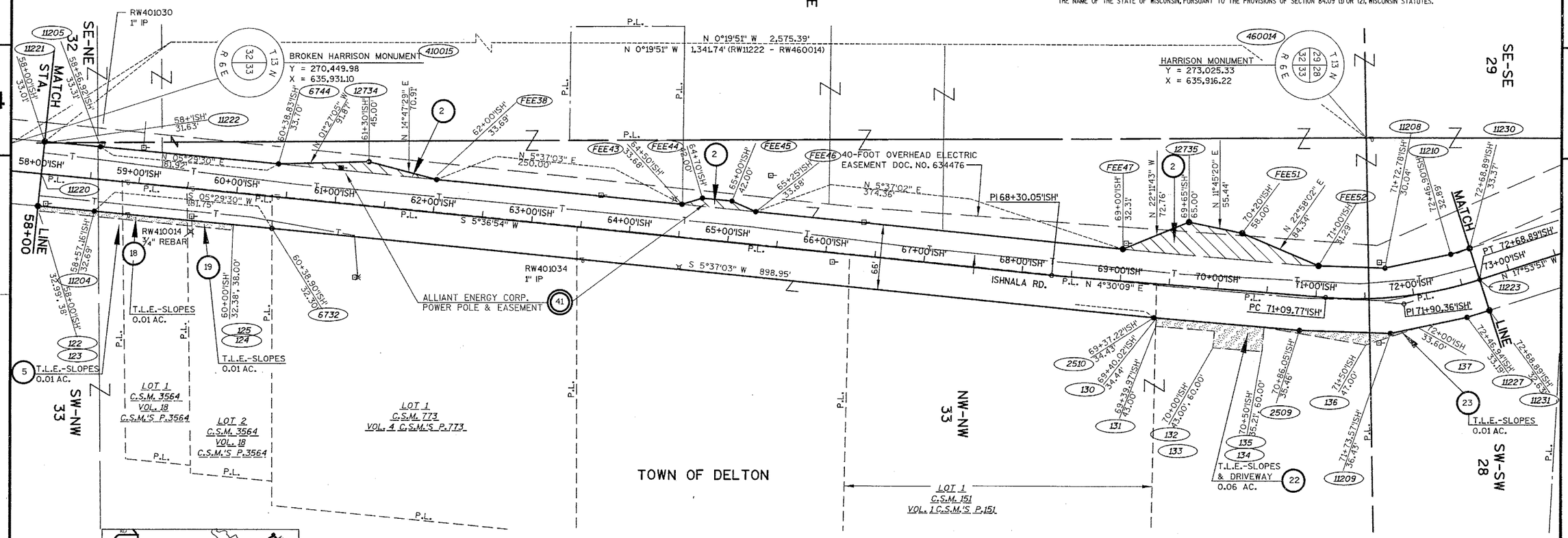

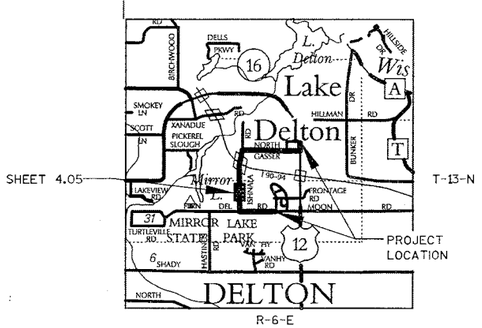

COURSE TABLE				COURSE TABLE			
POINT NUMBER	BEARING	DISTANCE	TO POINT NUMBER	POINT NUMBER	BEARING	DISTANCE	TO POINT NUMBER
FEE43	N 16°58'00" W	21.66'	FEE44	11208	N 11°58'00" W	68.35'	11210
FEE44	N 5°36'59" E	30.00'	FEE45	11210	N 17°42'16" W	20.20'	11230
FEE45	N 24°01'27" E	26.35'	FEE46	11230	N 72°06'09" E	33.37'	11223
410015	N 00°19'51" W	1233.65'	11222	11223	N 72°06'09" E	32.63'	11231
11220	N 84°23'05" W	31.63'	11222	11231	S 17°42'16" E	23.73'	11227
11222	N 84°23'05" W	1.38'	11221	11227	S 11°58'01" E	79.60'	11209
11221	N 05°19'19" E	56.92'	11205	11209	S 01°45'03" W	93.05'	2509
122	N 84°23'05" W	32.99'	11220	2509	S 04°54'03" W	148.85'	2510
FEE52	N 01°45'03" E	67.98'	11208				
11204	S 05°19'18" W	57.16'	122				

SCALE, FEET
0 50 100

FOR ADDITIONAL INFORMATION REFER TO THE TITLE SHEET, RECORDED IN THE OFFICE OF THE REGISTER OF DEEDS IN SAUK COUNTY AS SHEET 2 OF 2 OF DOCUMENT NUMBER 1032936 AND FILED IN D-279-B.

NOTE: OWNERSHIP OF PARCELS 22 AND 23 BASED ON A BEST FIT OF OLDER DEED AND SURVEY RECORD EVIDENCE.

STRAND ASSOCIATES, INC.®
910 WEST WINGRA DRIVE, MADISON, WI 53715
(608) 251-4843

I, TERRANCE L. GENSKE, REGISTERED LAND SURVEYOR, HEREBY CERTIFY THAT IN FULL COMPLIANCE WITH THE PROVISIONS OF SECTION 84.095 OF THE WISCONSIN STATUTES AND UNDER THE DIRECTION OF THE DEPARTMENT, I HAVE SURVEYED AND MAPPED TRANSPORTATION PROJECT PLAT 1674-00-20-4.05 AND THAT SUCH PLAT CORRECTLY REPRESENTS ALL EXTERIOR BOUNDARIES OF THE SURVEYED LAND.

WISCONSIN TERRANCE L. GENSKE S-1443 WAUNAKEE WI LAND SURVEYOR 6/8/2011

(SIGNATURE) _____ DATE 6/8/2011
(PRINTED NAME) Terrance L. Genske
(REGISTRATION NUMBER) S-1443

THIS PLAT AND RELOCATION ORDER ARE APPROVED FOR THE WISCONSIN DEPARTMENT OF TRANSPORTATION.
(SIGNATURE) _____ DATE 06/15/11
(PRINTED NAME) JAMES R. KUEHN

RESERVED FOR REGISTER OF DEEDS
PROJECT NUMBER 1674-00-20-4.05

ACCEPTED FOR RECODING AND FILING IN THE OFFICE OF THE REGISTER OF DEEDS IN SAUK COUNTY, WISCONSIN AT 1:00 P.M. ON JUNE 28, 2011 AS DOCUMENT #1034392 AND FILED IN D-280B

ORIGINAL DOCUMENT SIGNED BY BRENT BAILEY (R.O.D.)

FILE NAME : s:\MAD\1000--1099\1089\150\Micros\Design\Ishnala Bikepath\TPP\040405_rp.dgn PLOT DATE : 6/8/2011 PLOT BY : $$...plotuser...$$ PLOT NAME : PLOT SCALE : $$.....plotscale.....$$

TRANSPORTATION PROJECT PLAT NO: 1674-00-20 - 4.06

PART OF THE SW¼- SW¼AND THE NW¼- SW¼ OF SECTION 28, AND THE SE¼- SE¼AND NE¼-SE¼OF SECTION 29, IN T13N, R6E, THE TOWN OF DELTON, SAUK COUNTY, WISCONSIN.

RELOCATION ORDER LAKE DELTON - SAUK CITY (FERN DELL ROAD - W. FRONTAGE ROAD) SAUK COUNTY

TO PROPERLY ESTABLISH, LAY OUT, WIDEN, ENLARGE, EXTEND, CONSTRUCT, RECONSTRUCT, IMPROVE, OR MAINTAIN A PORTION OF THE HIGHWAY DESIGNATED ABOVE, THE STATE OF WISCONSIN DEPARTMENT OF TRANSPORTATION DEEMS IT NECESSARY TO RELOCATE OR CHANGE SAID HIGHWAY AND ACQUIRE CERTAIN LANDS AND INTERESTS OR RIGHTS IN LANDS FOR THE ABOVE PROJECT.

TO EFFECT THIS CHANGE, PURSUANT TO AUTHORITY GRANTED UNDER SECTION 84.02 (3) AND 84.09, WISCONSIN STATUTES, THE DEPARTMENT OF TRANSPORTATION HEREBY ORDERS THAT:
1. THAT PORTION OF SAID HIGHWAY AS SHOWN ON THIS PLAT IS LAID OUT AND ESTABLISHED TO THE LINES AND WIDTHS AS SO SHOWN FOR THE ABOVE PROJECT.
2. THE LANDS OR INTERESTS OR RIGHTS IN LANDS AS SHOWN ON THIS PLAT ARE REQUIRED BY THE DEPARTMENT FOR THE ABOVE PROJECT AND SHALL BE ACQUIRED IN THE NAME OF THE STATE OF WISCONSIN, PURSUANT TO THE PROVISIONS OF SECTION 84.09 (1) OR (2), WISCONSIN STATUTES.

SCHEDULE OF LANDS & INTERESTS REQUIRED

OWNERS NAMES ARE SHOWN FOR REFERENCE PURPOSES ONLY, AND ARE SUBJECT TO CHANGE PRIOR TO TRANSFER OF LAND INTEREST TO D.O.T.
ALL AREAS SHOWN IN ACRES UNLESS OTHERWISE NOTED.

PARCEL NUMBER	OWNER(S)	INTEREST REQUIRED	R/W ACRES REQUIRED NEW	EXISTING	TOTAL	TLE ACRES	PLE AC.	HE AC.
23	LARRY KISSACK	TLE	---	---	---	0.03	---	---
24	* SEE BELOW	TLE	---	---	---	0.02	---	---

* AVONELLE M. KISSACK, TRUSTEE, OR HER SUCCESSORS IN TRUST UNDER THE AVONELLE M. KISSACK LIVING TRUST, DATED JULY 9, 2008 AND ANY AMENDMENTS THERETO

P.I. = 71+90.36'ISH'
Y = 273,064.82
X = 636,084.52
DELTA = 22°24'00" (LT)
D = 14°04'39"
T = 80.59'
L = 159.12'
R = 407.00'
P.C. = 71+09.77'ISH'
P.T. = 72+68.89'ISH'
DB = S 4°30'09" W

P.I. = 75+93.03'ISH'
Y = 273,449.97
X = 635,960.14
DELTA = 12°26'23" (RT)
D = 4°30'29"
T = 138.52'
L = 275.95'
R = 1,271.00'
P.C. = 74+54.51'ISH'
P.T. = 77+30.46'ISH'

R/W CURVE BP7_2
L.C. = 121.09'
L.C.B. = N 13°26'04" W
R. = 1149.62'
L. = 121.15'

TOWN OF DELTON

SE-SE 29

N 0°03'30" W 494.65'

460014
HARRISON MONUMENT
Y = 273,025.332
X = 635,916.220

T 13 N R 6 E 28 29 32 33

NE-NE 32

R/W CURVE BP7_2

11233 74+89.52'ISH' 33.12'

6715 76+07.60'ISH' 32.65'

N 15°38'49" W 67.49'

N 15°38'49" W 62.21'

6711 77+32.29'ISH' 49.50'

40-FOOT OVERHEAD ELECTRIC EASEMENT DOC. NO. 634476

N 0°03'30" W 2678.73'

6725 70+71.55'ISH' 113.18'

R/W CURVE BP7_3

11213 85+87.40'ISH' 50.19'

NE-SE 29

I-90/94

ISHNALA RD.

11208

11230

PT 72+68.89'ISH'

72+68.89'ISH' 33.37'

PC 74+54.51'ISH'

PI 75+93.03'ISH'

PT 77+30.46'ISH'

N S°28'39" W 581.49'

N 4°46'34" W

R/W VARIES

80+63.31'ISH' AT SECTION LINE

S 63°02'47" E 145.28'

S 00°16'35" E 789.78'

RW400219 ¾" REBAR

PC 71+09.77'ISH'

LINE

11223

72+00'ISH' P.L.

73+00'ISH' P.L.

S 17°42'16" E 219.98'

N 17°53'51" W

410012 ¾" REBAR

R/W CURVE BP7_1

R/W CURVE BP7_1
L.C. = 235.91'
L.C.B. = S 10°12'41" E
R. = 1083.60'
L. = 236.38'

6689

6714

R/W CURVE BP7_3
L.C. = 285.07'
L.C.B. = N 1°21'57" E
R. = 1196.28'
L. = 285.75'

400219

85+36.74'ISH' 86.33'

HARRISON MONUMENT
Y = 275,704.058
X = 635,913.494

I-90/94

MATCH

S 4°30'09" W

PI 71+90.36'ISH'

72+68.89'ISH' 32.63'

73+00'ISH' 32.73' 65.00'

73+75'ISH' 32.99' 65.00'

11231

11223

11230

11233

6715

6711

6725

11213

400219

141

140

138

139

T.L.E.- SLOPES 0.02 AC. 24

23 T.L.E.-DRIVEWAY 0.03 AC.

NW-NW 33

SW-SW 28

NW-SW 28

TOWN OF DELTON

COURSE TABLE			
POINT NUMBER	BEARING	DISTANCE	TO POINT NUMBER
11231	S 72°06'09" W	32.63'	11223
11223	S 72°06'09" W	33.37'	11230
11230	N 17°42'16" W	221.54'	11233
6715	N 15°38'49" W	129.70'	6711

NOTE: DEED REFERENCES TO SECTION CORNER AND ALONG THE NORTH LINE OF SECTION 33 DO NOT MATCH ADJACENT SURVEYS OR OCCUPIED LANDS.

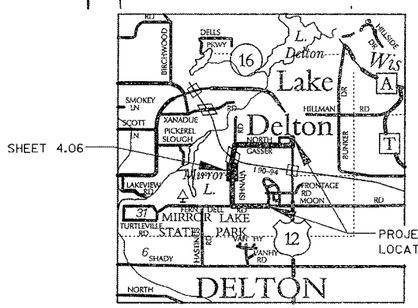

ROAD NAME	BASIS OF EXISTING R/W	WIDTH
ISHNALA RD.	PREVIOUS PROJECT I-90-2(13) 86, AND EXISTING SURVEYS OF RECORD	VARIES

SCALE, FEET
0 50 100

FOR ADDITIONAL INFORMATION REFER TO THE TITLE SHEET, RECORDED IN THE OFFICE OF THE REGISTER OF DEEDS IN SAUK COUNTY AS SHEET 2 OF 2 OF DOCUMENT NUMBER 1032936 AND FILED IN D-279-B.

STRAND ASSOCIATES, INC.®
910 WEST WINGRA DRIVE, MADISON, WI 53715
(608) 251-4843

I, TERRANCE L. GENSKE, REGISTERED LAND SURVEYOR, HEREBY CERTIFY THAT IN FULL COMPLIANCE WITH THE PROVISIONS OF SECTION 84.095 OF THE WISCONSIN STATUTES AND UNDER THE DIRECTION OF THE DEPARTMENT, I HAVE SURVEYED AND MAPPED TRANSPORTATION PROJECT PLAT 1674-00-20-4.06 AND THAT SUCH PLAT CORRECTLY REPRESENTS ALL EXTERIOR BOUNDARIES OF THE SURVEYED LAND.

WISCONSIN TERRANCE L. GENSKE S-1443 WAUNAKEE WI LAND SURVEYOR

(SIGNATURE) _____ DATE 6/9/2011
(PRINTED NAME) Terrance L. Genske
(REGISTRATION NUMBER) S-1443

THIS PLAT AND RELOCATION ORDER ARE APPROVED FOR THE WISCONSIN DEPARTMENT OF TRANSPORTATION.
(SIGNATURE) _____ DATE 06/15/11
(PRINTED NAME) JAMES R. KUEHN

RESERVED FOR REGISTER OF DEEDS
PROJECT NUMBER 1674-00-20-4.06

ACCEPTED FOR RECODING AND FILING IN THE OFFICE OF THE REGISTER OF DEEDS IN SAUK COUNTY, WISCONSIN AT 1:00 P.M. ON JUNE 28, 2011 AS DOCUMENT #1034393 AND FILED IN D-280C

ORIGINAL DOCUMENT SIGNED BY BRENT BAILEY (R.O.D.)

TRANSPORTATION PROJECT PLAT NO: 1674-00-20 - 4.07

PART OF THE NW¼- SW¼, SW¼- NW¼, SE¼- NW¼, AND THE NE¼- SW¼ OF SECTION 28, ALL IN T13N, R6E, THE TOWN OF DELTON, SAUK COUNTY, WISCONSIN.

RELOCATION ORDER LAKE DELTON - SAUK CITY (FERN DELL ROAD - W. FRONTAGE ROAD) SAUK COUNTY

TO PROPERLY ESTABLISH, LAY OUT, WIDEN, ENLARGE, EXTEND, CONSTRUCT, RECONSTRUCT, IMPROVE, OR MAINTAIN A PORTION OF THE HIGHWAY DESIGNATED ABOVE, THE STATE OF WISCONSIN DEPARTMENT OF TRANSPORTATION DEEMS IT NECESSARY TO RELOCATE OR CHANGE SAID HIGHWAY AND ACQUIRE CERTAIN LANDS AND INTERESTS OR RIGHTS IN LANDS FOR THE ABOVE PROJECT.

TO EFFECT THIS CHANGE, PURSUANT TO AUTHORITY GRANTED UNDER SECTION 84.02 (3) AND 84.09, WISCONSIN STATUTES, THE DEPARTMENT OF TRANSPORTATION HEREBY ORDERS THAT:
1. THAT PORTION OF SAID HIGHWAY AS SHOWN ON THIS PLAT IS LAID OUT AND ESTABLISHED TO THE LINES AND WIDTHS AS SO SHOWN FOR THE ABOVE PROJECT.
2. THE LANDS OR INTERESTS OR RIGHTS IN LANDS AS SHOWN ON THIS PLAT ARE REQUIRED BY THE DEPARTMENT FOR THE ABOVE PROJECT AND SHALL BE ACQUIRED IN THE NAME OF THE STATE OF WISCONSIN, PURSUANT TO THE PROVISIONS OF SECTION 84.09 (1) OR (2), WISCONSIN STATUTES.

SCHEDULE OF LANDS & INTERESTS REQUIRED

OWNERS NAMES ARE SHOWN FOR REFERENCE PURPOSES ONLY, AND ARE SUBJECT TO CHANGE PRIOR TO TRANSFER OF LAND INTEREST TO D.O.T.
ALL AREAS SHOWN IN ACRES UNLESS OTHERWISE NOTED.

PARCEL NUMBER	OWNER(S)	INTEREST REQUIRED	R/W ACRES REQUIRED NEW	EXISTING	TOTAL	TLE ACRES	PLE AC.	HE AC.
24	* SEE BELOW	TLE	---	---	---	0.01	---	---
26	DAVID L. GASSER & CHARLES F. MATHY, TRUSTEES OF THE ELINORE D. GASSER FAMILY TRUST OR THEIR SUCCESSORS IN TRUST	TLE	---	---	---	0.12	---	---
27	R & C INC.	TLE	---	---	---	0.01	---	---
42	VERIZON	RELEASE OF RIGHTS						

* AVONELLE M. KISSACK, TRUSTEE, OR HER SUCCESSORS IN TRUST UNDER THE AVONELLE M. KISSACK LIVING TRUST, DATED JULY 9, 2008 AND ANY AMENDMENTS THERETO

P.I. = 109+73.28'GA'
Y = 275,747.26
X = 637,256.76
DELTA = 2°50'08" (RT)
D = 1°25'57"
T = 99.00'
L = 197.95'
R = 4,000.00'
P.C. = 108+74.29'GA'
P.T. = 110+72.24'GA'

P.I. = 97+51.83'ISH'
Y = 275,569.54
X = 636,186.74
DELTA = 5° 34' 32" (LT)
D = 1° 32' 54"
T = 180.18'
L = 360.07'
R = 3,700.25'
P.C. = 95+71.65'ISH'
P.T. = 99+31.73'ISH'

TOWN OF DELTON

SW-NW 28

SE-NW 28

NW-SW 28

NE-SW 28

TOWN OF DELTON

APPROXIMATE LOCATION - UTILITY/INGRESS/EGRESS EASEMENT DOC. NO. 660245

2118 HARRISON MONUMENT
Y = 275,704.058
X = 635,913.494

T 13 N 29 28 R 6 E

ISHNALA RD.

6721 99+89.98'ISH' 57.96'

VERIZON PEDESTAL 42

T.L.E.-SLOPES & DRIVEWAY 0.03 AC. 26

143 144

212 99+89.33'ISH' 50.05' N 58°01'29" E 136.84'

142 99+91.48'GA' 41.00'

26-1

11235 99+97.33'ISH' 41.88'

CAMPGROUND PARKING SIGN

99+31.73'ISH' = 99+31.73'GA'
Y = 275,747.455
X = 636,215.211

11236 99+29.89'ISH' 50.08'

N 89°46'15" E 243.25'

YOGI BEAR CAMPING SIGN 238 237

97+65'ISH' 61.00' 51.42'

T.L.E.-DRIVEWAY 0.01 AC.

27

97+20'ISH' 61.00' 50.75

239 240

97+15.51'ISH' 50.44'

6716

96+00'ISH'

97+00'ISH'

98+00'ISH'

99+00'ISH'

100+00'ISH'

101+00'ISH'

102+00'ISH'

ISHNALA RD.

N 76°55'06" W 119.99'

RW410011 ¾" REBAR

99+03.60'ISH' 49.88'

11239

6683

98+97.57'ISH' 49.72'

98+68.33'ISH' AT QUARTER LINE

S 04°48'10" W 183.32'

PI 97+51.83'ISH'

97+18.30'ISH' 69.33'

R/W VARIES

400899

RW400899 ¾" REBAR - BENT

P.L.

100+00'GA' PI 101+00'GA' 102+00'GA' 103+00'GA' 104+00'GA' 105+00'GA' 106+00'GA' 107+00'GA' 108+00'GA' 109+00'GA'

S 89°59'22" E 958.91'

N 89°46'15" E

S 89°46'15" W 970.36'

NORTH GASSER RD.

PC 108+74.29'GA'

PI 109+73.26'GA' 110+00'GA' 111+00'GA' 112+00'GA' 113+00'GA'

S 87°09'03" E 338.47'

PT 110+72.24'GA'

N 87°09'03" W 336.70'

S 87°09'14" E

11237 11238

MATCH STA.

T.L.E.-DRIVEWAY 0.01 AC. 26

4995 FOUND ¾" IRON ROD
Y = 275,714.69
X = 638,570.83

T 13 N 28 R 6 E

2511 112+85'GA' 32.71'

156 155 109+50'GA' 34.57' 42.00'

12641 109+47.50'GA' 34.74'

157 158 110+00'GA' 33.44' 42.00'

LINE 112+85'GA'

112+85'GA' 35.23' 40.00'

107+00'GA' 32.37' 38.97'

145 146

T.L.E.-SLOPES 0.03 AC. 26

147 148 109+75'GA' 37.21' 44.00'

109+47.31'GA' 31.28'

110+50'GA' 37.42' 44.00'

150 149

12640

T.L.E.-SLOPES 0.05 AC. 26

112+00'GA' 37.00' 40.00'

151 152

154 153

T.L.E.-SLOPES 0.01 AC. 24

RW2114 ¾" REBAR

P.L.

ROAD NAME	BASIS OF EXISTING R/W	WIDTH
GASSER RD.	VOL. 379, P. 434 (DOCUMENT NO. 392887)	66'
ISHNALA RD.	PREVIOUS PROJECT ID 1-90-2(13)86 AND FOUND IRONS	VARIES

COURSE TABLE

POINT NUMBER	BEARING	DISTANCE	TO POINT NUMBER
2511	S 02°50'46" W	32.77'	11237
11237	S 02°50'46" W	21.14'	11238
11239	S 11°06'29" W	6.12'	6683
11238	S 02°50'46" W	12.10'	154

SCALE, FEET
0 50 100

SHEET 4.07

T-13-N

R-6-E

PROJECT LOCATION

0 1 MI. 2 MI.
LOCATION MAP SCALE

FOR ADDITIONAL INFORMATION REFER TO THE TITLE SHEET, RECORDED IN THE OFFICE OF THE REGISTER OF DEEDS IN SAUK COUNTY AS SHEET 2 OF 2 OF DOCUMENT NUMBER 1032936 AND FILED IN D-279B.

SIGN NUMBER	SIGN OWNER
26-1	ISHNALA

STRAND ASSOCIATES, INC.®
910 WEST WINGRA DRIVE, MADISON, WI 53715
(608) 251-4843

I, TERRANCE L. GENSKE, REGISTERED LAND SURVEYOR, HEREBY CERTIFY THAT IN FULL COMPLIANCE WITH THE PROVISIONS OF SECTION 84.095 OF THE WISCONSIN STATUTES AND UNDER THE DIRECTION OF THE DEPARTMENT, I HAVE SURVEYED AND MAPPED TRANSPORTATION PROJECT PLAT 1674-00-20-4.07 AND THAT SUCH PLAT CORRECTLY REPRESENTS ALL EXTERIOR BOUNDARIES OF THE SURVEYED LAND.

WISCONSIN TERRANCE L. GENSKE S-1443 WAUNAKEE WI LAND SURVEYOR

(SIGNATURE) _____ DATE 6/21/11
(PRINTED NAME) Terrance L. Genske
(REGISTRATION NUMBER) S-1443

THIS PLAT AND RELOCATION ORDER ARE APPROVED FOR THE WISCONSIN DEPARTMENT OF TRANSPORTATION.
(SIGNATURE) _____ DATE 06/22/11
(PRINTED NAME) JAMES R. KUEHN

RESERVED FOR REGISTER OF DEEDS
PROJECT NUMBER 1674-00-20-4.07

ACCEPTED FOR RECODING AND FILING IN THE OFFICE OF THE REGISTER OF DEEDS IN SAUK COUNTY, WISCONSIN AT 1:00 P.M. ON JUNE 28, 2011 AS DOCUMENT #1034394 AND FILED IN D-280D

ORIGINAL DOCUMENT SIGNED BY BRENT BAILEY (R.O.D.)

FILE NAME : s:\MAD\1000--1099\1089\150\Micros\Design\Ishnala Bikepath\TPP\040407_rp.dgn PLOT DATE : 6/22/2011 PLOT BY : $$...plotuser...$$ PLOT NAME : PLOT SCALE : $$.....plotscale.....$$

TRANSPORTATION PROJECT PLAT NO: 1674-00-20 - 4.08

PART OF THE SE¼- NW¼, NE¼- SW 1/4, SW¼- NE¼, AND THE NW¼- SE¼ OF SECTION 28, ALL IN T13N, R6E, THE TOWN OF DELTON, SAUK COUNTY, WISCONSIN.

RELOCATION ORDER LAKE DELTON - SAUK CITY (FERN DELL ROAD - W. FRONTAGE ROAD) SAUK COUNTY

TO PROPERLY ESTABLISH, LAY OUT, WIDEN, ENLARGE, EXTEND, CONSTRUCT, RECONSTRUCT, IMPROVE, OR MAINTAIN A PORTION OF THE HIGHWAY DESIGNATED ABOVE, THE STATE OF WISCONSIN DEPARTMENT OF TRANSPORTATION DEEMS IT NECESSARY TO RELOCATE OR CHANGE SAID HIGHWAY AND ACQUIRE CERTAIN LANDS AND INTERESTS OR RIGHTS IN LANDS FOR THE ABOVE PROJECT.

TO EFFECT THIS CHANGE, PURSUANT TO AUTHORITY GRANTED UNDER SECTION 84.02 (3) AND 84.09, WISCONSIN STATUTES, THE DEPARTMENT OF TRANSPORTATION HEREBY ORDERS THAT:
1. THAT PORTION OF SAID HIGHWAY AS SHOWN ON THIS PLAT IS LAID OUT AND ESTABLISHED TO THE LINES AND WIDTHS AS SO SHOWN FOR THE ABOVE PROJECT.
2. THE LANDS OR INTERESTS OR RIGHTS IN LANDS AS SHOWN ON THIS PLAT ARE REQUIRED BY THE DEPARTMENT FOR THE ABOVE PROJECT AND SHALL BE ACQUIRED IN THE NAME OF THE STATE OF WISCONSIN, PURSUANT TO THE PROVISIONS OF SECTION 84.09 (1) OR (2), WISCONSIN STATUTES.

SCHEDULE OF LANDS & INTERESTS REQUIRED

OWNERS NAMES ARE SHOWN FOR REFERENCE PURPOSES ONLY, AND ARE SUBJECT TO CHANGE PRIOR TO TRANSFER OF LAND INTEREST TO D.O.T.
ALL AREAS SHOWN IN ACRES UNLESS OTHERWISE NOTED.

PARCEL NUMBER	OWNER(S)	INTEREST REQUIRED	R/W ACRES REQUIRED NEW	EXISTING	TOTAL	TLE ACRES	PLE AC.	HE AC.
26	DAVID L. GASSER & CHARLES F. MATHY, TRUSTEES OF THE ELINORE D. GASSER FAMILY TRUST OR THEIR SUCCESSORS IN TRUST	PLE, TLE	---	---	---	0.31	0.01	---
41	ALLIANT ENERGY CORP.	RELEASE OF RIGHTS						

P.I. = 123+37.84'GA'
Y = 275,679.51
X = 638,619.67
DELTA = 3°02'35" (LT)
D = 1°08'45"
T = 132.81'
L = 265.55'
R = 5,000.00'
P.C. = 122+05.03'GA'
P.T. = 124+70.58'GA'

TOWN OF DELTON

SE-NW 28

N 89°46'15" E 2,657.36'

2511 LINE 112+85'GA'

160 159 162 161 163 164

112+85'GA' 32.77'

113+00'GA' 32.77', 38.00'

115+00'GA' 38.00', 41.00'

26 T.L.E.-SLOPES 0.14 AC.

121+50'GA' 32.72', 41.00'

S 87°09'03" E 1002.30'

550.00'

11237 113+00'GA'

11238 114+00'GA' 115+00'GA' 116+00'GA' 117+00'GA' 118+00'GA' 119+00'GA' 120+00'GA' 121+00'GA' 122+00'GA' 123+00'GA' 124+00'GA' 125+00'GA' 126+00'GA' 127+00'GA' 128+00'GA'

S 87°09'14" E

N 87°09'03" W 1004.07'

66'

NORTH GASSER RD.

S 87°09'14" E

PC 122+05.03'GA'

PI 123+37.84'GA'

PT 124+70.58'GA'

N 89°48'11" E

N 0°12'49" W 66.00'

S 89°47'10" W 410.17'

EXISTING R/W LINES

MATCH STA. 112+85'GA' TLE 33.23'

154

N 89°46'15" E 1653.61'

117+50'GA' 33.28', 46.00'

165 166

26 T.L.E.-SLOPES 0.12 AC.

119+50'GA' 46.00', 49.00'

167 168

121+50'GA' 33.28', 46.00'

170 TLE169

P.L.E.-DRAINAGE 0.01 AC.

N 2°51'06" E 8.00'

S 2°51'05" W 8.00'

120+09.43'GA' PLE 33.27', 41.27'

120+19.43'GA' PLE 33.27', 41.27'

PLE33 PLE34 PLE36 PLE35

N 87°08'44" W 10.00'

122+88.50'GA' 33.99'

122+100'GA' 33.58', 39.00'

6688 171 172

T.L.E.-SLOPES 0.02 AC. 26

124+50'GA' 30.65', 39.00'

174 173

NW-SE 28

WEST 400-FEET OF NW¼- SE¼ SECTION 28

125+00'GA' 30.56', 45.00'

175 176

6770

26 T.L.E.-DRIVEWAY 0.03 AC.

125+89.03'GA' 30.53', 45'

125+89.02'GA' 45'

242

126+97.47'GA' 30.53'

126+97.49'GA' 45.00'

6771

RW11010 1" IP

GAP - UNKNOWN OWNERSHIP

OUTLOT 1 - PREVIOUSLY DEDICATED FOR ROAD R/W

TOWN OF DELTON P.L.

VILLAGE OF LAKE DELTON

P.L.

T 13 N 28 R 6 E

4995 122+87.84'GA' 32.03' LT.

¾" IRON ROD
Y = 275,714.69
X = 638,570.83

N 89°47'10" E 2656.73'

NOT RECOVERED (COORDINATE FROM SAUK COUNTY SURVEYOR)
Y = 275,724.602
X = 641,227.538

T 13 N 28 27 R 6 E

SW-NE 28

TIE16 126+97.45'GA' 35.47'

S 89°47'10" W 408.40'

41 ALLIANT ENERGY CORP. POWER POLE

RW410005 ¾" REBAR

N 89°47'10" E 408.40'

RW410006 ¾" REBAR

T 13 N 29 28 R 6 E

2118 HARRISON MONUMENT
Y = 275,704.058
X = 635,913.494

SHEET 4.08

T-13-N

PROJECT LOCATION

R-6-E

0 1 MI. 2 MI.

LOCATION MAP SCALE

COURSE TABLE			
POINT NUMBER	BEARING	DISTANCE	TO POINT NUMBER
2118	N 89°46'15" E	1653.61'	11238
11238	N 02°50'46" E	21.14'	11237
11237	N 02°50'46" E	32.77'	2511
TIE16	S 00°12'49" E	35.47'	11240
11240	S 00°12'49" E	30.53'	6771
6688	N 87°09'03" W	269.63'	PLE36
6771	S 89°47'10" W	8.44'	6770
154	N 02°50'46" E	12.10'	11238
PLE33	N 87°04'03" W	724.43'	154

ROAD NAME	BASIS OF EXISTING R/W	WIDTH
GASSER RD.	VOL. 379, P. 434 (DOCUMENT NO. 392887)	66'

SCALE, FEET
0 50 100

FOR ADDITIONAL INFORMATION REFER TO THE TITLE SHEET, RECORDED IN THE OFFICE OF THE REGISTER OF DEEDS IN SAUK COUNTY AS SHEET 2 OF 2 OF DOCUMENT NUMBER 1032936 AND FILED IN D-279-B.

STRAND ASSOCIATES, INC.®
910 WEST WINGRA DRIVE, MADISON, WI 53715
(608) 251-4843

I, TERRANCE L. GENSKE, REGISTERED LAND SURVEYOR, HEREBY CERTIFY THAT IN FULL COMPLIANCE WITH THE PROVISIONS OF SECTION 84.095 OF THE WISCONSIN STATUTES AND UNDER THE DIRECTION OF THE DEPARTMENT, I HAVE SURVEYED AND MAPPED TRANSPORTATION PROJECT PLAT 1674-00-20-4.08 AND THAT SUCH PLAT CORRECTLY REPRESENTS ALL EXTERIOR BOUNDARIES OF THE SURVEYED LAND.

WISCONSIN TERRANCE L. GENSKE S-1443 WAUNAKEE WI LAND SURVEYOR 6/8/2011

(SIGNATURE) _____ DATE 6/8/2011
(PRINTED NAME) Terrance L. Genske
(REGISTRATION NUMBER) S-1443

THIS PLAT AND RELOCATION ORDER ARE APPROVED FOR THE WISCONSIN DEPARTMENT OF TRANSPORTATION.
(SIGNATURE) _____ DATE 06/15/11
(PRINTED NAME) JAMES R. KUEHN

RESERVED FOR REGISTER OF DEEDS
PROJECT NUMBER 1674-00-20-4.08

ACCEPTED FOR RECODING AND FILING IN THE OFFICE OF THE REGISTER OF DEEDS IN SAUK COUNTY, WISCONSIN AT 1:00 P.M. ON JUNE 28, 2011 AS DOCUMENT #1034395 AND FILED IN D-280E

ORIGINAL DOCUMENT SIGNED BY BRENT BAILEY (R.O.D.)

FILE NAME : s:\MAD\1000--1099\1089\150\Micros\Design\Ishnala Bikepath\TPP\040408_rp.dgn PLOT DATE : 6/8/2011 PLOT BY : $$...plotuser...$$ PLOT NAME : PLOT SCALE : $$.....plotscale.....$$

TRANSPORTATION PROJECT PLAT NO: 1674-00-20 - 4.09 AMENDMENT NO: 1

THIS AMENDS PARCEL 29; ADDS UTILITY PARCELS 45 AND 46; THIS ALSO AMENDS THE NAMES OF THE OWNERS ON PARCELS 31 AND 43 OF TRANSPORTATION PROJECT PLAT 1674-00-20-4.09, RECORDED AS DOCUMENT 1034396.

PART OF LOT 2 OF ZAP'S COMMERCIAL PLAT, ALSO PARCELS 28, 29, 31 AND 33 IN THE VILLAGE OF LAKE DELTON, AND PART OF PARCEL 127 IN THE TOWN OF DELTON, ALL PART OF TRANSPORTATION PROJECT PLAT 1674-00-20-4.09, IN SECTION 28, T13N, R6E, SAUK COUNTY, WISCONSIN.

RELOCATION ORDER LAKE DELTON - SAUK CITY (FERN DELL ROAD - W. FRONTAGE ROAD) SAUK COUNTY

TO PROPERLY ESTABLISH, LAY OUT, WIDEN, ENLARGE, EXTEND, CONSTRUCT, RECONSTRUCT, IMPROVE, OR MAINTAIN A PORTION OF THE HIGHWAY DESIGNATED ABOVE, THE STATE OF WISCONSIN DEPARTMENT OF TRANSPORTATION DEEMS IT NECESSARY TO RELOCATE OR CHANGE SAID HIGHWAY AND ACQUIRE CERTAIN LANDS AND INTERESTS OR RIGHTS IN LANDS FOR THE ABOVE PROJECT.

TO EFFECT THIS CHANGE, PURSUANT TO AUTHORITY GRANTED UNDER SECTION 84.02 (3) AND 84.09, WISCONSIN STATUTES, THE DEPARTMENT OF TRANSPORTATION HEREBY ORDERS THAT:
1. THAT PORTION OF SAID HIGHWAY AS SHOWN ON THIS PLAT IS LAID OUT AND ESTABLISHED TO THE LINES AND WIDTHS AS SO SHOWN FOR THE ABOVE PROJECT.
2. THE LANDS OR INTERESTS OR RIGHTS IN LANDS AS SHOWN ON THIS PLAT ARE REQUIRED BY THE DEPARTMENT FOR THE ABOVE PROJECT AND SHALL BE ACQUIRED IN THE NAME OF THE STATE OF WISCONSIN, PURSUANT TO THE PROVISIONS OF SECTION 84.09 (1) OR (2), WISCONSIN STATUTES.

SCHEDULE OF LANDS & INTERESTS REQUIRED

OWNERS NAMES ARE SHOWN FOR REFERENCE PURPOSES ONLY, AND ARE SUBJECT TO CHANGE PRIOR TO TRANSFER OF LAND INTEREST TO D.O.T.
ALL AREAS SHOWN IN ACRES UNLESS OTHERWISE NOTED.

PARCEL NUMBER	OWNER(S)	INTEREST REQUIRED	R/W ACRES REQUIRED NEW	EXISTING	TOTAL	TLE ACRES	PLE AC.	HE AC.
127	R & G INC.	FEE, TLE	0.16	---	0.16	0.24	---	---
28	WAYNE J. MANTERNACH	FEE, TLE	0.07	---	0.07	0.08	---	---
29	WAYNE J. MANTERNACH & JILL K. REYNOLDS	FEE, TLE	0.02	---	0.02	0.01	---	---
31	WESTERMAN PROPERTIES, LLC	FEE, TLE	0.08	---	0.08	0.04	---	---
33	OUTLOTS LLC.	FEE, TLE	0.07	---	0.07	0.06	---	---
41	ALLIANT ENERGY CORP.	RELEASE OF RIGHTS						
42	VERIZON	RELEASE OF RIGHTS						
43	VILLAGE OF LAKE DELTON-SEWER	RELEASE OF RIGHTS						
45	VILLAGE OF LAKE DELTON-WATER	RELEASE OF RIGHTS						
46	ALLIANT ENERGY CORP.- GAS	RELEASE OF RIGHTS						

P.I. = STA. 131+90.56'GA'
Y = 275,682.44
X = 639,472.46

P.I. = STA. 131+90.56'SU'
Y = 275,717.50
X = 639,472.87

SIGN NUMBER	SIGN OWNER
127-1	LAMAR - BUFFALO PHILS & ZENKE'S
127-2	LAMAR - KNUCKLEHEADS
28-1	PONDEROSA STEAK

ROAD NAME	BASIS OF EXISTING R/W	WIDTH
GASSER RD.	C.S.M. 1907, C.S.M. 3393, PLAT OF WATERMAN OUTLET MALL, & FOUND IRONS	VARIES

NOTE:
"EXCLUDED FROM TLE IS ANY LAND THAT, AT THE TIME OF RECORDING OF THIS PLAT, IS OCCUPIED BY BUILDINGS SHOWN ON THIS PLAT"

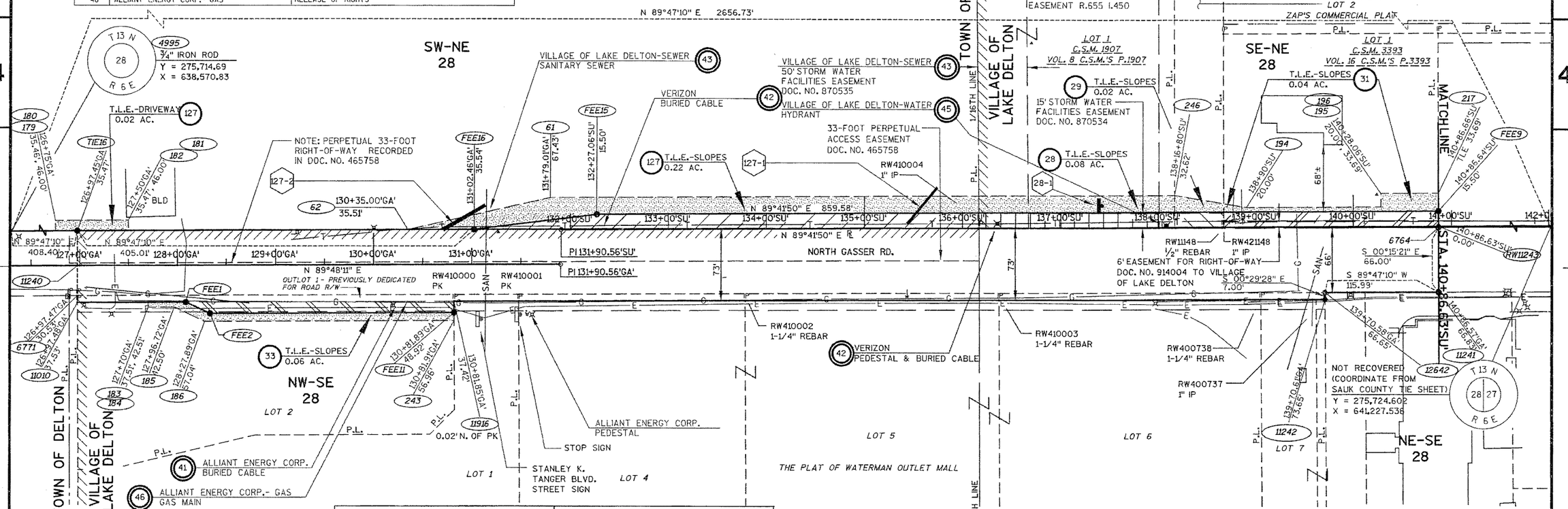

COURSE TABLE			
POINT NUMBER	BEARING	DISTANCE	TO POINT NUMBER
FEE16	N 82°57'02" E	126.00'	FEE15
11916	S 00°23'14" E	11.50'	FEE11
FEE2	N 65°11'47" W	27.19'	FEE1
TIE16	N 89°47'10" E	405.01'	FEE16
FEE9	S 00°15'21" E	15.50'	11243
11243	S 00°15'21" E	0.83'	6764
FEE1	S 89°47'10" W	111.26'	11010
11242	S 89°47'10" W	889.42'	11916

COURSE TABLE			
POINT NUMBER	BEARING	DISTANCE	TO POINT NUMBER
FEE11	S 89°47'10" W	248.49'	FEE2
11010	N 00°17'11" W	7.00'	6771
6771	N 00°12'49" W	30.53'	11240
11240	N 00°12'49" W	35.47'	TIE16

POINT	STATION	OFFSET
FEE1	128+08.75'GA'	37.50'
FEE2	128+33.39'GA'	48.99'

SCALE, FEET
0 50 100

FOR ADDITIONAL INFORMATION REFER TO THE TITLE SHEET, RECORDED IN THE OFFICE OF THE REGISTER OF DEEDS IN SAUK COUNTY AS SHEET 2 OF 2 OF DOCUMENT NUMBER 1032935 AND FILED IN D-279B.

STRAND ASSOCIATES, INC.®
910 WEST WINGRA DRIVE, MADISON, WI 53715
(608) 251-4843

I, TERRANCE L. GENSKE, REGISTERED LAND SURVEYOR, HEREBY CERTIFY THAT IN FULL COMPLIANCE WITH THE PROVISIONS OF SECTION 84.095 OF THE WISCONSIN STATUTES AND UNDER THE DIRECTION OF THE DEPARTMENT, I HAVE SURVEYED AND MAPPED TRANSPORTATION PROJECT PLAT 1674-00-20-4.09 AMENDMENT NO. 1 AND THAT SUCH PLAT CORRECTLY REPRESENTS ALL EXTERIOR BOUNDARIES OF THE SURVEYED LAND.

WISCONSIN TERRANCE L. GENSKE S-1443 WAUNAKEE LAND SURVEYOR

(SIGNATURE) _____ DATE 10/17/11
(PRINTED NAME) Terrance L. Genske
(REGISTRATION NUMBER) S-1443

THIS PLAT AND RELOCATION ORDER ARE APPROVED FOR THE WISCONSIN DEPARTMENT OF TRANSPORTATION.
(SIGNATURE) _____ DATE 10/17/2011
(PRINTED NAME) JAMES R. KUEHN

RESERVED FOR REGISTER OF DEEDS
PROJECT NUMBER 1674-00-20-4.09
AMENDMENT NO. 1

DOCUMENT #1041517

ACCEPTED FOR RECORDING AND FILING IN THE OFFICE OF THE REGISTER OF DEEDS IN SAUK COUNTY, WISCONSIN AT 11:15A.M. ON NOV. 3, 2011. FILED IN D-282C

ORIGINAL SIGNED BY BRENT BAILEY(R.O.D.)

TRANSPORTATION PROJECT PLAT NO: 1674-00-20 - 4.10 AMENDMENT NO: 1

ADDS PARCEL 45 AND REMOVES PARCEL 43 ON TPP 1674-00-20-4.10 RECORDED AS DOCUMENT 1034397.

PART OF LOT 1 OF ZAP'S COMMERCIAL PLAT, IN THE SE¼- NE¼ OF SECTION 28, T13N, R6E, IN THE VILLAGE OF LAKE DELTON, SAUK COUNTY, WISCONSIN.

RELOCATION ORDER LAKE DELTON - SAUK CITY (FERN DELL ROAD - W. FRONTAGE ROAD) SAUK COUNTY

TO PROPERLY ESTABLISH, LAY OUT, WIDEN, ENLARGE, EXTEND, CONSTRUCT, RECONSTRUCT, IMPROVE, OR MAINTAIN A PORTION OF THE HIGHWAY DESIGNATED ABOVE, THE STATE OF WISCONSIN DEPARTMENT OF TRANSPORTATION DEEMS IT NECESSARY TO RELOCATE OR CHANGE SAID HIGHWAY AND ACQUIRE CERTAIN LANDS AND INTERESTS OR RIGHTS IN LANDS FOR THE ABOVE PROJECT.

TO EFFECT THIS CHANGE, PURSUANT TO AUTHORITY GRANTED UNDER SECTION 84.02 (3) AND 84.09, WISCONSIN STATUTES, THE DEPARTMENT OF TRANSPORTATION HEREBY ORDERS THAT:

1. THAT PORTION OF SAID HIGHWAY AS SHOWN ON THIS PLAT IS LAID OUT AND ESTABLISHED TO THE LINES AND WIDTHS AS SO SHOWN FOR THE ABOVE PROJECT.
2. THE LANDS OR INTERESTS OR RIGHTS IN LANDS AS SHOWN ON THIS PLAT ARE REQUIRED BY THE DEPARTMENT FOR THE ABOVE PROJECT AND SHALL BE ACQUIRED IN THE NAME OF THE STATE OF WISCONSIN, PURSUANT TO THE PROVISIONS OF SECTION 84.09 (1) OR (2), WISCONSIN STATUTES.

SCHEDULE OF LANDS & INTERESTS REQUIRED

OWNERS NAMES ARE SHOWN FOR REFERENCE PURPOSES ONLY, AND ARE SUBJECT TO CHANGE PRIOR TO TRANSFER OF LAND INTEREST TO D.O.T. ALL AREAS SHOWN IN ACRES UNLESS OTHERWISE NOTED.

PARCEL NUMBER	OWNER(S)	INTEREST REQUIRED	R/W NEW	R/W EXISTING	R/W TOTAL	TLE ACRES	PLE AC.	HE AC.
32	WISCONSIN DELLS INVESTMENTS INC.	FEE, TLE	0.11	---	0.11	0.16	---	---
42	VERIZON	RELEASE OF RIGHTS						
45	VILLAGE OF LAKE DELTON -WATER	RELEASE OF RIGHTS						

SIGN NUMBER	SIGN OWNER
32-1	CULVERS/DENNY'S

ROAD NAME	BASIS OF EXISTING R/W	WIDTH
GASSER RD.	C.S.M. 3408, PLAT OF WATERMAN OUTLET MALL, & ZAP'S COMMERCIAL PLAT	66'
ZAP DRIVE	ZAP'S COMMERCIAL PLAT	66'

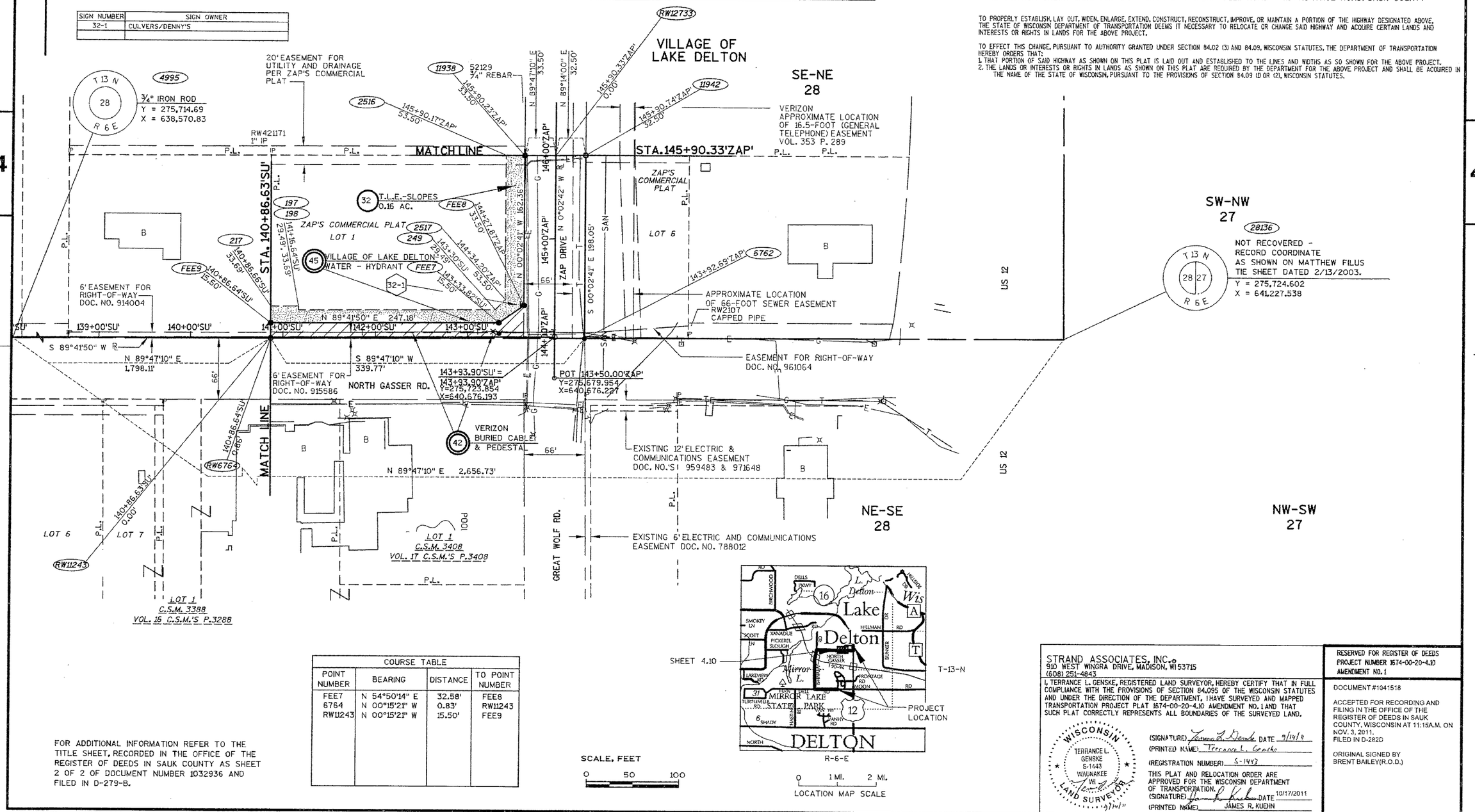

COURSE TABLE			
POINT NUMBER	BEARING	DISTANCE	TO POINT NUMBER
FEE7	N 54°50'14" E	32.58'	FEE8
6764	N 00°15'21" W	0.83'	RW11243
RW11243	N 00°15'21" W	15.50'	FEE9

FOR ADDITIONAL INFORMATION REFER TO THE TITLE SHEET, RECORDED IN THE OFFICE OF THE REGISTER OF DEEDS IN SAUK COUNTY AS SHEET 2 OF 2 OF DOCUMENT NUMBER 1032936 AND FILED IN D-279-B.

SCALE, FEET
0 50 100

STRAND ASSOCIATES, INC.®
910 WEST WINGRA DRIVE, MADISON, WI 53715
(608) 251-4843

I, TERRANCE L. GENSKE, REGISTERED LAND SURVEYOR, HEREBY CERTIFY THAT IN FULL COMPLIANCE WITH THE PROVISIONS OF SECTION 84.095 OF THE WISCONSIN STATUTES AND UNDER THE DIRECTION OF THE DEPARTMENT, I HAVE SURVEYED AND MAPPED TRANSPORTATION PROJECT PLAT 1674-00-20-4.10 AMENDMENT NO. 1 AND THAT SUCH PLAT CORRECTLY REPRESENTS ALL BOUNDARIES OF THE SURVEYED LAND.

WISCONSIN TERRANCE L. GENSKE S-1443 WAUNAKEE WI LAND SURVEYOR

(SIGNATURE) Terrance L. Genske DATE 9/14/11
(PRINTED NAME) Terrance L. Genske
(REGISTRATION NUMBER) S-1443

THIS PLAT AND RELOCATION ORDER ARE APPROVED FOR THE WISCONSIN DEPARTMENT OF TRANSPORTATION.
(SIGNATURE) DATE 10/17/2011
(PRINTED NAME) JAMES R. KUEHN

RESERVED FOR REGISTER OF DEEDS
PROJECT NUMBER 1674-00-20-4.10
AMENDMENT NO. 1

DOCUMENT #1041518

ACCEPTED FOR RECORDING AND FILING IN THE OFFICE OF THE REGISTER OF DEEDS IN SAUK COUNTY, WISCONSIN AT 11:15A.M. ON NOV. 3, 2011.
FILED IN D-282D

ORIGINAL SIGNED BY BRENT BAILEY(R.O.D.)

TRANSPORTATION PROJECT PLAT NO: 1674-00-20 - 4.11

PART OF LOTS 2, 3, 4 AND 5 OF ZAP'S COMMERCIAL PLAT, ALSO PART OF LOT 1 OF C.S.M. 1907, LOT 1 OF C.S.M. 3825 AND LOT 1 OF C.S.M. 3212, ALL IN THE SE¼- NE¼ OF SECTION 28, IN T13N, R6E, THE VILLAGE OF LAKE DELTON, SAUK COUNTY, WISCONSIN.

RELOCATION ORDER LAKE DELTON - SAUK CITY (FERN DELL ROAD - W. FRONTAGE ROAD) SAUK COUNTY

TO PROPERLY ESTABLISH, LAY OUT, WIDEN, ENLARGE, EXTEND, CONSTRUCT, RECONSTRUCT, IMPROVE, OR MAINTAIN A PORTION OF THE HIGHWAY DESIGNATED ABOVE, THE STATE OF WISCONSIN DEPARTMENT OF TRANSPORTATION DEEMS IT NECESSARY TO RELOCATE OR CHANGE SAID HIGHWAY AND ACQUIRE CERTAIN LANDS AND INTERESTS OR RIGHTS IN LANDS FOR THE ABOVE PROJECT.

TO EFFECT THIS CHANGE, PURSUANT TO AUTHORITY GRANTED UNDER SECTION 84.02 (3) AND 84.09, WISCONSIN STATUTES, THE DEPARTMENT OF TRANSPORTATION HEREBY ORDERS THAT:
1. THAT PORTION OF SAID HIGHWAY AS SHOWN ON THIS PLAT IS LAID OUT AND ESTABLISHED TO THE LINES AND WIDTHS AS SO SHOWN FOR THE ABOVE PROJECT.
2. THE LANDS OR INTERESTS OR RIGHTS IN LANDS AS SHOWN ON THIS PLAT ARE REQUIRED BY THE DEPARTMENT FOR THE ABOVE PROJECT AND SHALL BE ACQUIRED IN THE NAME OF THE STATE OF WISCONSIN, PURSUANT TO THE PROVISIONS OF SECTION 84.09 (1) OR (2), WISCONSIN STATUTES.

NOTE:
"EXCLUDED FROM TLE IS ANY LAND THAT, AT THE TIME OF RECORDING OF THIS PLAT, IS OCCUPIED BY BUILDINGS SHOWN ON THIS PLAT"

SCHEDULE OF LANDS & INTERESTS REQUIRED

OWNERS NAMES ARE SHOWN FOR REFERENCE PURPOSES ONLY, AND ARE SUBJECT TO CHANGE PRIOR TO TRANSFER OF LAND INTEREST TO D.O.T.
ALL AREAS SHOWN IN ACRES UNLESS OTHERWISE NOTED.

PARCEL NUMBER	OWNER(S)	INTEREST REQUIRED	R/W ACRES REQUIRED NEW	EXISTING	TOTAL	TLE ACRES	PLE AC.	HE AC.
28	WAYNE J. MANTERNACH	TLE	---	---	---	0.02	---	---
36	GRIFFIN WESTERMAN	TLE	---	---	---	0.40	---	---
37	MIECZYSLAW & ALAXANDRA MUCEK	TLE	---	---	---	0.06	---	---
38	A LA MODE LLC	TLE	---	---	---	0.03	---	---
39	GILLS & GILLS PROPERTIES LLC	TLE	---	---	---	0.04	---	---
41	ALLIANT ENERGY CORP.	RELEASE OF RIGHTS						
42	VERIZON	RELEASE OF RIGHTS						
43	VILLAGE OF LAKE DELTON - SEWER UTILITY	RELEASE OF RIGHTS						
44	CHARTER COMMUNICATIONS	RELEASE OF RIGHTS						

ROAD NAME	BASIS OF EXISTING R/W	WIDTH
ZAP DRIVE	ZAP'S COMMERCIAL PLAT	VARIES

P.I. = 149+90.90'ZAP'
Y = 276,320.85
X = 640,675.73
DELTA = 89° 46' 02" (RT)
D = 104° 10' 27"
T = 54.78'
L = 86.17'
R = 55.00'
P.C. = 149+36.12'ZAP'
P.T. = 150+22.29'ZAP'

VILLAGE OF LAKE DELTON SEWER UTILITY SEWER AND EASEMENT (43)

LOT 1 C.S.M. 1907 VOL. 8 C.S.M.'S P.1907

LOT 1 C.S.M. 3825 VOL. 19 C.S.M.'S P.3825

(ALAKAI HOTEL & SUITES)

STORMWATER DRAINAGE EASEMENT AGREEMENT DOC. NO. 784556

PT 150+22.29'ZAP'

APPROXIMATE LOCATION OF 66-FOOT SEWER EASEMENT REEL 194 IMAGE 174

RW2103 ¾" REBAR

POOL

28 T.L.E.-SLOPES 0.02 AC.

37 T.L.E.-SLOPES 0.06 AC.

APPROXIMATE LOCATION OF 40-FOOT SEWER EASEMENT REEL 194 IMAGE 174
STONE WALL WITH FENCE

PI 149+90.90'ZAP'

2518 149+69.30'ZAP' 101.04'

11936 209 210 258 6680

149+19.36'ZAP' 70.26'
149+89.62'ZAP' 39.61'
150+03.26'ZAP' 150+04.20'ZAP' = 44.32'
153+50.21'ZAP' 63.00'
153+50.33'ZAP' 34.00'

P.I.

16' DRAINAGE AND UTILITY EASEMENT

N 89°43'21" E 416.18'

S 00°32'56" E 66.00'

POT 153+93.33'ZAP'

150+00'ZAP' SAN 151+00'ZAP' 66' 152+00'ZAP' SAN 153+00'ZAP'

N 89°43'20" E

G SS G S 89°43'21" W 326.58'

PC 149+36.12'ZAP'

R/W CURVE TO 149+30'ZAP' 32.50', 45' 2522 2521

150+24.07'ZAP' 32.00'

149+34.11'ZAP' 32.50'

LOT 4

11956 262 261

11955

CULVER'S SIGNS

T.L.E.-DRIVEWAY 0.03 AC. (38)

LOT 5 ZAP'S COMMERCIAL PLAT

259 260

152+00'ZAP' 32.00', 32.00'

151+45'ZAP' 32.00', 32.00'

153+15'ZAP' 32.00', 42.00'

153+50.65'ZAP' 41.85'

153+50.69'ZAP' 32.00'

11951 2525 2523 2524

T.L.E.-SLOPES 0.01 AC. (38)

42 VERIZON PEDESTAL ALLIANT ENERGY CORP. ELECTIC BOX, BURIED CABLE

41

20' DRAINAGE AND UTILITY EASEMENT PER ZAP'S COMMERCIAL PLAT

LOT 3 ZAP'S COMMERCIAL PLAT

Z

149+00'ZAP'

ZAP DRIVE

148+00'ZAP'

147+00'ZAP'

146+00'ZAP'

CULVER'S SIGNS

T.L.E.-DRIVEWAY&SLOPES 0.05 AC. (38)

T.L.E.-DRIVEWAY &SLOPES 0.04 AC. (39)

7.5' DRAINAGE AND UTILITY EASEMENT

VERIZON APPROXIMATE LOCATION OF 16.5-FOOT (GENERAL TELEPHONE) EASEMENT VOL. 353 P. 289

44 CHARTER COMMUNICATIONS PEDESTAL

LOT 2 ZAP'S COMMERCIAL PLAT

36 T.L.E.-SLOPES 0.40 AC.

DENNY'S "ENTER" SIGNS

146+20'ZAP' 32.50', 45' 2520 2519

VILLAGE OF LAKE DELTON SEWER UTILITY SEWER AND EASEMENT (43)

LOT 1 C.S.M. 3212 VOL. 15 C.S.M.'S P.3212

WISCONSIN DELLS PKWY SERVICE RD.

US 12

20' DRAINAGE AND UTILITY EASEMENT PER ZAP'S COMMERCIAL PLAT

RW421171 1" IP

2513 145+90.11'ZAP' 73.50'

MATCH LINE

STA. 145+90.33

52129 ¾" REBAR

LOT 1 ZAP'S COMMERCIAL PLAT

7.5' DRAINAGE AND UTILITY EASEMENT

APPROXIMATE LOCATION OF 66-FOOT SEWER EASEMENT REEL 194 IMAGE 174

VILLAGE OF LAKE DELTON SE-NE 28

T 13 N 28 R 6 E

¾" IRON ROD
Y = 275,714.69
X = 638,570.83

145+90.18'ZAP' 33.50'

11938

145+00'ZAP'

N 89°47'10" E 33.50'

N 89°14'00" E 32.50'

N 0°02'41" W 198.05'

LOT 6

145+90.74'ZAP' 33.50'

145+90.33'ZAP' 0.00'

11942

RW12733

N 89°47'10" E 2,656.73'

2+00'SU'

143+00'SU'

144+00'ZAP'

NORTH GASSER RD.
S 89°47'10" W 2,137.88'

FOR ADDITIONAL INFORMATION REFER TO THE TITLE SHEET, RECORDED IN THE OFFICE OF THE REGISTER OF DEEDS IN SAUK COUNTY AS SHEET 2 OF 2 OE. DOCUMENT NUMBER 1032936 AND FILED IN D-279-B.

NE-SE 28

N 00°22'37" W 2,626.68'

NOT RECOVERED - RECORD COORDINATE AS SHOWN ON MATTHEW FILUS TIE SHEET DATED 2/18/2003.
Y = 278,351.225
X = 641,210.257

T 13 N 21 22 28 27 R 6 E

R/W CURVE 70
L.C. = 34.80'
L.C.B. = S 43°58'48" W
R. = 25.00'
L. = 38.48'

VILLAGE OF LAKE DELTON

SHEET 4.11

T-13-N

PROJECT LOCATION

SW-NW 27

R-6-E

0 1 MI. 2 MI.
LOCATION MAP SCALE

NOT RECOVERED - RECORD COORDINATE AS SHOWN ON MATTHEW FILUS TIE SHEET DATED 2/13/2003.
Y = 275,724.602
X = 641,227.538

SCALE, FEET
0 50 100

STRAND ASSOCIATES, INC.®
910 WEST WINGRA DRIVE, MADISON, WI 53715
(608) 251-4843

I, TERRANCE L. GENSKE, REGISTERED LAND SURVEYOR, HEREBY CERTIFY THAT IN FULL COMPLIANCE WITH THE PROVISIONS OF SECTION 84.095 OF THE WISCONSIN STATUTES AND UNDER THE DIRECTION OF THE DEPARTMENT, I HAVE SURVEYED AND MAPPED TRANSPORTATION PROJECT PLAT 1674-00-20-4.11 AND THAT SUCH PLAT CORRECTLY REPRESENTS ALL EXTERIOR BOUNDARIES OF THE SURVEYED LAND.

WISCONSIN TERRANCE L. GENSKE S-1443 WAUNAKEE WI LAND SURVEYOR

(SIGNATURE) DATE 6/8/2011
(PRINTED NAME) Terrance L. Genske
(REGISTRATION NUMBER) S-1443

THIS PLAT AND RELOCATION ORDER ARE APPROVED FOR THE WISCONSIN DEPARTMENT OF TRANSPORTATION.
(SIGNATURE) DATE 06/15/11
(PRINTED NAME) JAMES R. KUEHN

RESERVED FOR REGISTER OF DEEDS
PROJECT NUMBER 1674-00-20-4.11

ACCEPTED FOR RECODING AND FILING IN THE OFFICE OF THE REGISTER OF DEEDS IN SAUK COUNTY, WISCONSIN AT 1:00 P.M. ON JUNE 28, 2011 AS DOCUMENT #1034398 AND FILED IN D-281B

ORIGINAL DOCUMENT SIGNED BY BRENT BAILEY (R.O.D.)

FILE NAME : s:\MAD\1000--1099\1089\150\Micros\Design\Ishnala Bikepath\TPP\040411_rp.dgn PLOT DATE : 6/8/2011 PLOT BY : $$...plotuser...$$ PLOT NAME : PLOT SCALE : $$.....plotscale.....$$

COORDINATES - THIS SHEET WILL NOT BE RECORDED

SHEET 4.01

FEE3,270494.0340,635912.3510
FEE4,270531.8660,635875.3680
FEE5,270582.3180,635874.9110
FEE8,270416.8230,635862.5520
FEE9,270400.9040,635862.5930
FEE10,270401.4080,636062.4370
FEE11,270416.8973,636062.4460
FEE61,270416.5280,636612.4460
FEE220,270394.0530,636692.7660
FEE248,270494.0824,635930.8419
1,270482.9285,636012.3790
2,270494.2960,636012.3500
10,270401.4080,636062.4370
11,270416.8973,636062.4460
57,270482.8280,636162.4830
58,270486.3520,636162.4850
59,270486.2110,636412.4850
60,270482.6610,636412.4830
65,270394.0140,636762.4330
66,270413.0140,636762.4430
67,270412.9150,636937.4440
68,270410.9150,636937.4420
69,270482.4630,636707.4830
70,270488.0450,636707.4860
71,270488.0140,636762.4850
72,270497.0140,636762.4910
73,270416.2427,637037.4460
74,270410.8580,637037.4420
75,270496.8270,637092.4910
76,270482.2060,637092.4830
77,270416.1990,637102.4450
78,270403.8220,637102.4380
RW11216,270449.7879,637162.4645
RW11217,270482.1587,637162.4827
RW11218,270449.1587,637162.4641
RW12608,270416.4740,636692.3800

SHEET 4.02

PLE9,270481.9386,637491.0230
PLE10,270494.0270,637491.0300
PLE11,270494.0220,637501.0300
PLE12,270481.9320,637501.0230
PLE13,270415.9302,637503.6611
PLE14,270411.0190,637503.6570
PLE15,270411.0140,637513.6570
PLE16,270415.9235,637513.6611
80,270416.1587,637162.4455
81,270415.9910,637412.9560
82,270399.5900,637512.4360
83,270411.5620,637562.4430
84,270411.5430,638387.4840
85,270415.3380,638387.4820
86,270415.2546,638512.4820
87,270402.6090,638512.4890
88,270402.6580,638606.5190
89,270415.1920,638606.3600
92,270481.9910,637412.4820
93,270504.6460,637412.4950
94,270504.5620,637562.4950
95,270481.8910,637562.4830
96,270481.6230,637962.4820
97,270486.7380,637962.4850
98,270486.5540,638262.4440
99,270481.4220,638262.4410
213,270411.4120,638137.4840
214,270408.4120,638137.4860
215,270408.4380,638187.4860
216,270411.5140,638187.4840
RW11216,270449.7879,637162.4645
RW11217,270482.1587,637162.4827
RW11218,270449.1587,637162.4641
RW11219,270449.6580,638605.9280
RW12614,270481.1920,638605.6060

SHEET 4.03

100,270481.2130,638612.4480
101,270496.6610,638612.4400
102,270497.5010,639012.4380
103,270482.4145,639012.4460
104,270415.6350,638812.4820
105,270408.7660,638812.4860
106,270408.8450,638962.4860
107,270415.9990,638962.4826
108,270483.2494,639282.4470
109,270496.0130,639282.4470
110,270496.0600,639372.1910
RW6364,270415.2946,638672.3091
RW7755,270416.9710,639362.9550
RW12614,270481.1920,638605.6060
RW12619,270415.1920,638606.3600
RW410018,270482.5042,639045.7641
RW410019,270481.8586,638805.8998
RW410020,270481.4998,638705.8418
RW410025,270483.4560,639348.0621

SHEET 4.04

FEE16,270482.4950,635722.2150
FEE17,270497.0290,635722.1050
FEE18,270497.5280,635787.9200
FEE19,270594.0990,635781.4100
FEE20,270642.8390,635794.6080
FEE22,270759.0430,635829.9880
FEE24,271257.6530,635867.8600
FEE25,271386.8560,635882.3100
FEE26,271584.1780,635913.3190
FEE111,270690.5650,635815.7380
FEE112,270931.1550,635914.7010
FEE114,271030.7940,635923.2110
PLE21,271323.1270,635952.5970
PLE22,271321.9720,635962.5300
PLE23,271331.9050,635963.6850
PLE24,271333.0600,635953.7520
113,270979.5700,635934.2220
115,271179.9870,635935.9510
116,271326.4870,635972.1570
117,271403.1040,635961.8969
118,271527.9350,635974.3660
119,271527.3240,635980.5830
120,271621.8680,635989.8780
121,271622.5260,635983.1770
122,271677.2900,635988.2790
RW2500,270482.9830,635930.9060
RW2503,270482.6720,635797.8518
RW2507,270547.6960,635870.5060
RW11220,271680.5176,635955.4514
RW11221,271683.7480,635922.5948
RW11222,271683.6127,635923.9706
RW12721,270700.9470,635890.0060
RW12722,270913.7865,635846.9772
RW12723,270907.3760,635912.6700
RW12724,271186.6090,635870.2770
RW12726,271009.1350,635927.8668
RW12727,270964.4483,635928.1249
RW12737,271236.6080,635876.0910

SHEET 4.05

FEE38,272081.8950,635961.0590
FEE43,272330.6940,635985.5300
FEE44,272351.4120,635979.2090
FEE45,272381.2680,635982.1450
FEE46,272405.3340,635992.8720
FEE47,272777.8960,636029.5160
FEE51,272899.5410,636013.3270
FEE52,272977.1980,636046.2380
122,271677.2900,635988.2790
123,271676.7990,635993.2690
124,271875.8400,636012.8390
125,271876.3890,636007.2500
130,272812.5560,636099.2090
131,272811.8250,636107.7330
132,272871.6750,636112.4460
133,272870.3400,636129.3930
134,272920.1860,636133.3180
135,272922.1320,636108.6040
136,273025.6310,636126.3580
137,273079.2760,636108.5470
RW2509,272958.0520,636111.6840
RW2510,272809.7480,636098.9680
RW6732,271915.1127,636010.9730
RW6744,271921.5010,635945.2830
RW11204,271734.2000,635993.5800
RW11205,271740.4190,635927.8740
RW11208,273045.1450,636048.3150
RW11209,273051.0630,636114.5270
RW11210,273112.0097,636034.1431
RW11221,271683.7480,635922.5948
RW11222,271683.6127,635923.9706
RW11223,273141.5090,636059.7560
RW11227,273128.9300,636098.0230
RW11230,273131.2536,636027.9999
RW11231,273151.5365,636090.8064
RW12734,272013.3372,635942.9563
RW12735,272845.2612,636002.0313

SHEET 4.05

138,273181.1750,636081.3450
139,273191.0910,636112.0490
140,273262.4620,636089.0010
141,273252.6240,636058.5360
RW6689,273361.0070,636023.9380
RW6711,273584.9740,635897.5130
RW6714,273593.1790,635982.1160
RW6715,273460.0780,635932.4950
RW6725,274163.8100,635842.0080
RW11208,273045.1450,636048.3150
RW11213,274448.8000,635848.8030
RW11230,273131.2536,636027.9999
RW11231,273151.5365,636090.8064
RW11233,273342.3001,635960.6284
RW400219,274382.9470,635978.3057

SHEET 4.07

142,275788.4410,636274.9650
143,275788.4240,636383.4890
144,275777.9390,636383.4860
145,275714.3390,636983.4750
146,275708.3390,636983.4738
149,275699.4330,637331.4840
150,275706.0020,637331.7730
151,275699.0500,637481.4050
152,275696.0530,637481.2560
153,275691.8330,637566.1510
154,275698.5907,637566.4869
155,275781.2124,637234.1390
156,275788.5430,637234.2790
157,275787.2610,637284.7870
158,275778.7053,637284.5160
212,275777.4960,636272.8170
237,275613.1980,636138.7480
238,275615.0860,636129.3560
239,275562.1340,636118.3030
240,275559.9650,636128.3220
RW2511,275764.5090,637569.7640
RW6683,275705.4390,636258.6750
RW6716,275545.9300,636125.5820
RW6721,275801.3920,636277.5070
RW11235,275815.8040,636178.4300
RW11236,275705.0312,636156.7380
RW11237,275731.7836,637568.1371
RW11238,275710.6740,637567.0877
RW12640,275715.3260,637230.2070
RW12641,275781.3330,637231.7160
RW400899,275522.8671,636243.3355

SHEET 4.08

PLE33,275662.5830,638290.0260
PLE34,275654.5930,638289.6280
PLE35,275654.0950,638299.6160
PLE36,275662.0860,638300.0140
154,275698.5907,637566.4869
159,275763.7635,637584.7450
160,275768.9931,637585.0050
161,275754.0970,637884.6350
162,275757.0930,637884.7840
163,275729.7850,638434.1060
164,275721.5150,638433.6940
165,275675.4780,638030.9120
166,275662.7520,638030.2790
167,275652.8220,638230.0330
168,275649.8260,638229.8840
169,275642.8920,638429.7860
170,275655.5960,638430.4180
171,275648.7270,638580.8940
172,275643.3070,638580.7280
173,275640.9380,638731.8740
174,275649.2910,638731.8800
175,275649.8510,638882.0040
176,275635.4110,638882.0540
242,275635.7170,638971.0790
RW2511,275764.5090,637569.7640
RW6688,275648.6840,638569.3130
RW6770,275650.1825,638971.0320
RW6771,275650.2140,638979.4760
RW11237,275731.7836,637568.1371
RW11238,275710.6740,637567.0877
RW11240,275680.7456,638979.3622
TIE16,275716.2140,638979.2300

SHEET 4.09

ISHFEE1,275643.6290,639090.7750
ISHFEE2,275632.2210,639115.4600
ISHFEE9,275737.7300,640368.8532
ISHFEE11,275633.1483,639363.9507
ISHFEE15,275733.1880,639509.2870
ISHFEE16,275717.7250,639384.2427
RW11241,275655.3992,640369.2209
RW11242,275647.9670,640253.2890
RW11243,275722.2305,640368.9224
RW11916,275644.6480,639363.8730
RW12642,275654.9660,640253.2290
TIE16,275716.2138,638979.2300
ISHTLE61,275750.0550,639461.6620
ISHTLE62,275717.4733,639316.7831
ISHTLE179,275716.1299,638956.7767
ISHTLE180,275726.6680,638956.7400
ISHTLE181,275726.9250,639031.7400
ISHTLE182,275716.4098,639031.7762
ISHTLE183,275643.4850,639052.0270
ISHTLE184,275638.4850,639052.0440
ISHTLE185,275638.5850,639078.7620
ISHTLE186,275624.1560,639109.9830
ISHTLE194,275741.1910,640172.1910
ISHTLE195,275741.9210,640310.2440
ISHTLE196,275755.6070,640310.1720
ISHTLE217,275755.9160,640368.7720
ISHTLE243,275625.1094,639364.0051
ISHTLE246,275753.4230,640098.9210

SHEET 4.10

FEE7,275739.0370,640616.0310
FEE8,275757.8000,640642.6660
FEE9,275737.7300,640368.8532
197,275756.0750,640398.7530
198,275751.8800,640398.7760
217,275755.9160,640368.7720
249,275753.0080,640612.1350
RW6762,275722.6666,640708.6938
RW11938,275920.1580,640642.5390
RW11942,275920.7180,640708.5390
RW2516,275920.0834,640622.5389
RW2517,275764.1160,640622.6610

SHEET 4.11

209,276354.9620,640698.2540
210,276363.9610,640698.2110
259,276289.9790,640908.3640
260,276269.9790,640908.4610
261,276269.7120,640853.4610
262,276289.7120,640853.3650
RW6680,276356.7061,641058.3757
RW11936,276354.6896,640642.1989
RW11938,275920.1580,640642.5390
RW11942,275920.7180,640708.5390
RW11951,276290.7080,641059.0080
RW11955,276264.0879,640708.2698
RW11956,276289.1260,640732.4320
RW2513,275920.0087,640602.5390
RW2518,276354.5326,640602.1996
RW2519,275949.9892,640721.0155
RW2520,275949.9790,640708.5154
RW2521,276259.9891,640720.7728
RW2522,276259.9790,640708.2730
RW2523,276290.5350,641023.3630
RW2524,276280.5360,641023.4110
RW2525,276280.8780,641059.1020

EXISTING MONUMENTATION

SHEET 4.01

RW700,270416.5,636692.4,3/4" REBAR
RW701,270416.5,637103.7,3/4" REBAR

SHEET 4.02

RW704,270481.2,638605.7,1" REBARP
RW42208,270416.1,638053.5,3/4" RBR
RW310017,270483.1,637272.3,3/4" RBR
RW310022,270416.5,638606.3,3/4" RBR
RW410024,270415.7,638253.4,3/4" RBR

SHEET 4.03

RW702,270448.3,638671.9,PK
RW704,270481.2,638605.7,1" REBAR
RW11976,270533.8,639369.8,3/4" REBAR
RW310022,270416.5,638606.3,3/4" REBAR
RW310023,270415.5,638672.3,3/4" REBAR
RW410018,270482.5,639045.8,3/4" REBAR
RW410019,270481.8,638805.9,3/4" REBAR
RW410020,270481.5,638705.8,3/4" REBAR
RW410025,270483.5,639348.1,3/4" REBAR

SHEET 4.04

RW401030,271737.7,635923.7,1" IP
RW410014,271763.5,635996.3,3/4" REBAR

SHEET 4.05

RW401030,271737.7,635923.7,1" IP
RW401034,272224.2,636041.4,1" IP
RW410014,271763.5,635996.3,3/4" REBAR

SHEET 4.06

410012,273227.1,636066.7,3/4" REBAR
410013,273211.8,636346.4,3/4" REBAR
RW400219,274382.9,635978.3,3/4" REBAR

SHEET 4.07

RW2114,275709.4,637230.3,3/4" REBAR
RW410011,275705.0,636258.6,3/4" REBAR

SHEET 4.08

RW11010,275643.2,638979.5,1" IP
RW410005,275649.9,638979.4,3/4" REBAR
RW410006,275650.2,638971.0,3/4" REBAR

SHEET 4.09

RW11010,275643.2,638979.5,1" IP
RW11148,275721.3,640148.0,1/2" REBAR
RW400737,275648.0,640253.3,1" IP
RW400738,275647.7,640187.2,1-1/4" REBAR
RW410000,275644.6,639363.9,PK
RW410001,275644.8,639429.8,PK
RW410002,275645.7,639660.9,1-1/4" REBAR
RW410003,275646.6,639919.5,1-1/4" REBAR
RW410004,275719.5,639899.2,3/4" REBAR
RW410005,275649.9,638979.3,3/4" REBAR BENT
RW410006,275650.2,638971.0,3/4" REBAR
RW421148,275721.2,640149.1,1" IP

SHEET 4.10

52129,275920.1,640642.6,3/4" REBAR IP
RW1148,275721.2,640149.0,1" IP
RW2107,275723.0,640821.1,CAPPED PIPE
RW11148,275721.3,640148.0,1/2" REBAR
RW421171,275919.1,640368.0,1" IP

SHEET 4.11

52129,275920.119,640642.609,3/4" REBAR IP
RW1148,275721.254,640149.009,1" IP
RW2103,276355.787,640773.184,IP -3/4" REBAR
RW2107,275723.020,640821.103,CAPPED PIPE
RW11148,275721.293,640148.042,1/2" REBAR
RW421171,275919.134,640368.043,1" IP

STATE OF WISCONSIN
DEPARTMENT OF TRANSPORTATION

TRANSPORTATION PROJECT PLAT TITLE SHEET

PROJECT NO. 1674-00-27

LAKE DELTON - SAUK CITY ROAD

(FERN DELL ROAD - GIEBEL COURT)
R/E DRAINAGE MITIGATION/DETENTION

USH 12
SAUK COUNTY

R-6-E

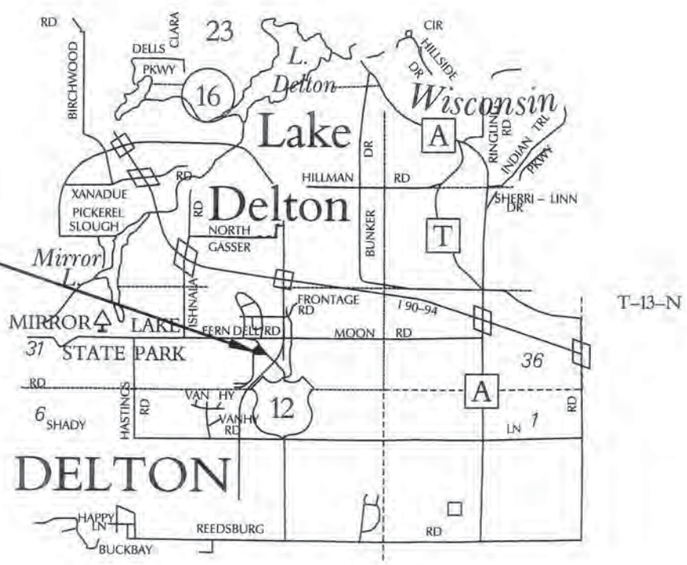

PROJECT LOCATION

T-13-N

CONVENTIONAL ABBREVIATIONS

ACCESS POINT	AP		
ACCESS RIGHTS	AR		
ACRES	AC.	REFERENCE LINE	R/L
AND OTHERS	ET.AL.	REMAINING	REM.
CENTERLINE	C/L	RIGHT-OF-WAY	R/W
CERTIFIED SURVEY MAP	CSM	SECTION	SEC.
CORNER	COR.	STATION	STA.
CONVEYANCE OF RIGHTS	CR	TEMPORARY LIMITED EASEMENT	TLE
DOCUMENT	DOC.	VOLUME	V.
EASEMENT	EASE.		
LAND CONTRACT	LC		
MONUMENT	MON.		
PAGE	P.		
PERMANENT LIMITED EASEMENT	PLE		
PROPERTY LINE	PL		
RECORDED AS	(100')		
HOUSE	H		
GARAGE	G		
SHED	S		

CURVE DATA

LONG CHORD	LCH
LONG CHORD BEARING	LCB
RADIUS	R
DEGREE OF CURVE	D
CENTRAL ANGLE OR DELTA	DELTA
LENGTH OF CURVE	L
TANGENT	TAN

CONVENTIONAL SYMBOLS

FOUND IRON PIPE/PIN	⌀ (1" UNLESS NOTED)	PROPOSED R/W LINE	
		EXISTING H.E. LINE	
R/W MONUMENT	⊙ (SET)	PROPERTY LINE	
R/W STANDARD	▲ (SET)	LOT & TIE LINES	
SIGN	SIGN	SLOPE INTERCEPTS	
SECTION CORNER MONUMENT	●	CORPORATE LIMITS	
SECTION CORNER SYMBOL		ACCESS RESTRICTED (BY PREVIOUS ACQUISITION/CONTROL)	
FEE (HATCH VARIES)		ACCESS RESTRICTED (BY ACQUISITION)	
TEMPORARY LIMITED EASEMENT		NO ACCESS (BY STATUTORY AUTHORITY)	
PERMANENT LIMITED EASEMENT		SECTION LINE	
R/W BOUNDARY POINT		QUARTER LINE	
PARCEL NUMBER	204	SIXTEENTH LINE	
SIGN NUMBER (OFF PREMISE)	21-4	EXISTING RIGHT-OF-WAY LINE	
BUILDING		PROPOSED REFERENCE LINE	
		PARALLEL OFFSET	

CONVENTIONAL UTILITY SYMBOLS

WATER	W	
GAS	G	
TELEPHONE	T	
OVERHEAD TRANSMISSION LINES	OH	
ELECTRIC	E	
CABLE TELEVISION	TV	
FIBER OPTIC	FO	
SANITARY SEWER	SAN	
STORM SEWER	SS	
	NON COMPENSABLE	COMPENSABLE
POWER POLE		
TELEPHONE POLE		
TELEPHONE PEDESTAL		
ELECTRIC TOWER		

NOTES:

DISTANCES SHOWN FROM THE RIGHT-OF-WAY LINE TO BUILDINGS ARE APPROXIMATE ONLY.

COORDINATES AND BEARINGS SHOWN ON THIS PLAT ARE REFERENCED TO THE WISCONSIN COUNTY COORDINATE SYSTEM, SAUK COUNTY ZONE, NAD83 (91) ADJUSTMENT. THE COORDINATES SHOWN ARE GRID COORDINATES AND ARE TO BE USED AS GRID OR GROUND VALUES ON THIS PLAT.

RIGHT-OF-WAY MONUMENTS ARE TYPE 2 (TYPICALLY ¾" X 24" REBARS) UNLESS OTHERWISE NOTED, AND WILL BE PLACED PRIOR TO THE COMPLETION OF THE PROJECT.

RIGHT-OF-WAY BOUNDARIES ARE DEFINED WITH COURSES OF THE PERIMETER OF THE HIGHWAY LANDS REFERENCED TO THE U.S. PUBLIC LAND SURVEY SYSTEM OR OTHER "SURVEYS OF PUBLIC RECORD".

PROPERTY LINES SHOWN ON THIS PLAT ARE DRAWN FROM DATA DERIVED FROM MAPS AND DOCUMENTS OF PUBLIC RECORD AND/OR EXISTING OCCUPATIONAL LINES. THIS PLAT MAY NOT BE A TRUE REPRESENTATION OF EXISTING PROPERTY LINES, EXCLUDING RIGHT-OF-WAY LINES, AND SHOULD NOT BE USED AS A SUBSTITUTE FOR AN ACCURATE FIELD SURVEY.

ALL RIGHT-OF-WAY LINES DEPICTED IN NON-ACQUISITION AREAS ARE INTENDED TO REESTABLISH EXISTING RIGHT-OF-WAY LINES AS DETERMINED FROM PREVIOUS PROJECTS, OTHER RECORDED DOCUMENTS, OR FROM CENTERLINE OF EXISTING PAVEMENT

DIMENSIONING FOR THE NEW R/W IS MEASURED ALONG AND PERPENDICULAR TO NEW REFERENCE LINES.

ACCESS TO BE CONSTRUCTED WITHIN THE LOCATION SPECIFIED. THE LOCATION SHOWN IS THE CENTER POINT OF THE DEFINED WIDTH, AND NOT NECESSARILY THE WIDTH OF THE PHYSICAL DRIVEWAY.

PARCEL IDENTIFICATION NUMBERS MAY NOT POINT TO ALL AREAS OF ACQUISITION, AS NOTED ON THE SCHEDULE OF LANDS & INTERESTS REQUIRED.

TEMPORARY LIMITED EASEMENT
A TEMPORARY LIMITED EASEMENT (TLE) IS A RIGHT FOR CONSTRUCTION PURPOSES, AS DEFINED HEREIN, INCLUDING THE RIGHT TO OPERATE NECESSARY EQUIPMENT THEREON AND THE RIGHT OF INGRESS AND EGRESS, AS LONG AS REQUIRED FOR SUCH PUBLIC PURPOSE, INCLUDING THE RIGHT TO PRESERVE, PROTECT, REMOVE, OR PLANT THEREON ANY VEGETATION THAT THE HIGHWAY AUTHORITIES MAY DEEM NECESSARY OR DESIRABLE. ALL TLEs EXPIRE AT THE COMPLETION OF THE CONSTRUCTION PROJECT FOR WHICH THIS INSTRUMENT IS GIVEN.

PERMANENT LIMITED EASEMENT
A PERMANENT LIMITED EASEMENT (PLE) IS A RIGHT FOR CONSTRUCTION AND MAINTENANCE PURPOSES, AS DEFINED HEREIN, INCLUDING THE RIGHT TO OPERATE NECESSARY EQUIPMENT THEREON AND THE RIGHT OF INGRESS AND EGRESS, AS LONG AS REQUIRED FOR SUCH PUBLIC PURPOSE, INCLUDING THE RIGHT TO PRESERVE, PROTECT, REMOVE, OR PLANT THEREON ANY VEGETATION THAT THE HIGHWAY AUTHORITIES MAY DEEM NECESSARY OR DESIRABLE. BUT WITHOUT PREJUDICE TO THE OWNER'S RIGHT TO MAKE OR CONSTRUCT IMPROVEMENT ON SAID LANDS OR TO FLATTEN THE SLOPES, PROVIDING SAID ACTIVITIES WILL NOT IMPAIR OR OTHERWISE ADVERSELY AFFECT THE HIGHWAY FACILITIES.

N

LAYOUT
SCALE 0 1 MI. 2 MI.

#1046189 (Title Sheet)
RECEIVED
AT 2:12 O'CLOCK P M
ON JAN 20 20 12
N/C
D-233 E (TITLE SHEET)
162

PROJECT NUMBER 1674-00-27-4.01
SHEET 2 OF 2

FILE NAME : S:\MAD\1000--1099\1089\150\Micros\Design\Ishnala Bikepath\TPP\1674-00-27\040101_RW_TITLE.dgn PLOT DATE : 1/12/2012 PLOT BY : _username_ PLOT NAME : PLOT SCALE : $$.....plotscale.....$$

TITLE

STRAND ASSOCIATES, INC.®
910 WEST WINGRA DRIVE, MADISON, WI 53715
(608) 251-4843

I, HEATHER S. BARTELT, REGISTERED LAND SURVEYOR, HEREBY CERTIFY THAT IN FULL COMPLIANCE WITH THE PROVISIONS OF SECTION 84.095 OF THE WISCONSIN STATUTES AND UNDER THE DIRECTION OF THE DEPARTMENT, I HAVE SURVEYED AND MAPPED TRANSPORTATION PROJECT PLAT 1674-00-27-4.01 AMENDMENT NO. 1 AND THAT SUCH PLAT CORRECTLY REPRESENTS ALL EXTERIOR BOUNDARIES OF THE SURVEYED LAND.

WISCONSIN HEATHER S. BARTELT S-2797 MADISON WI LAND SURVEYOR

(SIGNATURE) Heather Bartelt DATE 1/27/14
(PRINTED NAME) HEATHER BARTELT
(REGISTRATION NUMBER) S-2797

THIS PLAT AND RELOCATION ORDER ARE APPROVED FOR THE WISCONSIN DEPARTMENT OF TRANSPORTATION.
(SIGNATURE) DATE 01/30/14
(PRINTED NAME) JENNIFER QUERAM

RESERVED FOR REGISTER OF DEEDS
TPP NUMBER 1674-00-27-4.01
AMENDMENT NO. 1

DOCUMENT #1087779

ACCEPTED FOR RECORDING IN THE OFFICE OF THE REGISTER OF DEEDS IN SAUK COUNTY, WISCONSIN AT 10:15 A.M. ON FEBRUARY 4, 2014 AND FILED IN D-289B

THE ORIGINAL DOCUMENT WAS SIGNED BY BRENT BAILEY, R.O.D.

P.I. = 44+07.57'AC2'
Y = 269,896.93
X = 639,629.25
DELTA = 48° 19' 23" (LT)
D = 16° 22' 13"
T = 157.01'
L = 295.19'
R = 350.00'
P.C. = 42+50.55'AC2'
P.T. = 45+45.74'AC2'

P.I. = 84+45.24'E'
Y = 270,450.19
X = 639,707.70
DELTA = 46° 17' 27" (RT)
D = 16° 22' 13"
T = 149.62'
L = 282.77'
R = 350.00'
P.C. = 82+95.62'E'
P.T. = 85+78.40'E'

P.I. = 89+51.27'E'
Y = 270,042.10
X = 640,028.13
DELTA = 5° 35' 54" (LT)
D = 31° 08' 20"
T = 9.00'
L = 17.98'
R = 184.00'
P.C. = 89+42.27'E'
P.T. = 89+60.25'E'

P.I. = 93+37.89'E'
Y = 269,749.07
X = 640,280.36
DELTA = 5° 33' 20" (LT)
D = 2° 51' 53"
T = 97.04'
L = 193.92'
R = 2,000.00'
P.C. = 92+40.86'E'
P.T. = 94+34.78'E'

P.I. = 95+44.22'E'
Y = 269,606.35
X = 640,429.57
DELTA = 5° 40' 43" (LT)
D = 10° 43' 46"
T = 26.48'
L = 52.93'
R = 534.00'
P.C. = 95+17.73'E'
P.T. = 95+70.66'E'

FERN DELL ROAD
PC 82+95.62'E'
Y = 270,450.08
X = 639,558.08
FOUND PK
Y = 270,448.192
X = 638,605.943
T13 N R6E 33
P.I. 84+45.24'E'
85°00'E
PI 87+28.68'E'
PT 85+78.40'E'
S 43°44'59" E
PI 40+68.28'AC2'
S 28°54'32" E
STA. 39+86.23'AC2' = STA. 88+09.25'E'
PI 88+91.68'E'
PC 89+42.27'E'
PT 89+60.25'E'
90°00'E
PI 89+51.27'E'
S 35°04'52" E
S 40°43'12" E
PC 92+40.86'E'
PI 93+37.89'E'
N 49°21'40" W 57.86'
PT 94+34.78'E'
PC 95+17.73'E'
95°00'E
PT 95+70.66'E'
PI 95+53.57'E'
S 51°57'15" E
S 36°32'00" E
PI 98+29.51'E'
100°00'E
S 51°45'56" E
PI 101+69.56'E'
PC 42+50.55'AC2'
S 48°19'23" W
PLE FOR DRAINAGE
PI 44+07.57'AC2'
PLE4 44+02.99'AC2' 44.06'
89+77.74'E' 246.10' PLE3
PT 45+45.74'AC2'
45°00'AC2'
42.00'
43+49.82'AC2'
44+49.85'AC2'
45+45.68'AC2'
41.94'
56.92'
42+69.74'AC2'
42+59.89'AC2'
305.36'
N 40°28'18" W
95.20'
N 85°44'27" E 118.00'
21314
21315
21312
21313
21223
92+78.98'E' 241.84'
93+44.92'E' 59.88'
93+44.97'E' 54.88'
93+99.85'E' 115.87'
95+44.22'E' 200.57'
95+90.05'E' 76.04'
N 89°16'32" E 1052.86'
N 86°54'44" E 747.52'
S 0° 00'12" W 263.62'
N 00°43'28" W 1642.65'
S 00°43'28" E 985.23'
48+09.31'AC2' 41.95'
84' R/W
50+00'AC2'
GIEBEL COURT
DUE SOUTH
CTH BD
USH 12
LOT 1 C.S.M. 2835 VOL.13, P.2835
NW-SE
NE-SE
P.I.
ACCESS EASEMENT OVER SOUTH 66 FEET OF NORTH 71 FEET
HARRISON MONUMENT FOUND
Y = 267,820.520
X = 638,639.170
T13 N R6E 33 33

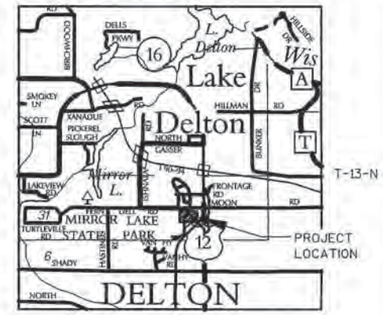

SCALE, FEET
0 100 200

COURSE TABLE

POINT NUMBER	BEARING	DISTANCE	TO POINT NUMBER
21314	S 46°14'41" W	55.00'	21312
21312	S 85°14'56" W	117.96'	21315
21168	N 60°19'33" W	28.12'	21169
21169	S 60°08'09" W	26.81'	21170
21170	S 45°08'51" W	43.95'	21171
21171	S 25°11'39" W	88.04'	21172
21172	S 6°31'37" W	84.37'	21173
21172	N 25° 11' 39" E	41.41'	PLE4
PLE4	N 25°11' 39" E	46.64'	21171
21168	S 40°28' 18" E	95.20'	PLE3
PLE3	S 89°55' 29" W	160.48'	PLE4

SCHEDULE OF LANDS & INTERESTS REQUIRED

OWNERS NAMES ARE SHOWN FOR REFERENCE PURPOSES ONLY, AND ARE SUBJECT TO CHANGE PRIOR TO TRANSFER OF LAND INTEREST TO D.O.T.
ALL AREAS SHOWN IN ACRES UNLESS OTHERWISE NOTED.

PARCEL NUMBER	OWNER(S)	INTEREST REQUIRED	R/W ACRES REQUIRED NEW	EXISTING	TOTAL	T.E. ACRES	PLE AC.	HE AC.
1	JOHN K. BUCK	FEE	3.65	---	3.65	---	---	---
2	WISCONSIN WINNEBAGO TRIBE	PLE	---	---	---	---	0.19	---

ROAD NAME	BASIS OF EXISTING R/W	WIDTH
GIEBEL CT.	PREVIOUS PROJECT ID 1674-00-21	VARIES
CTH BD	PREVIOUS PROJECT ID 1674-00-21	VARIES

NOTE: ACCESS ALONG CTH BD AND USH 12 CONTROLLED UNDER R/W PROJECT 1674-00-21.

FOR ADDITIONAL INFORMATION REFER TO THE TITLE SHEET.
RECORDED IN THE SAUK COUNTY REGISTER OF DEEDS AS SHEET 2 OF 2 OF DOCUMENT NUMBER 1046169 AND FILED IN D-283E

TRANSPORTATION PROJECT PLAT NO: 1674-00-27 - 4.01 AMENDMENT 1

AMENDS THE INTEREST REQUIRED FOR PARCEL 2 OF TRANSPORTATION PROJECT PLAT NO. 1674-00-27-4.01 RECORDED AS DOCUMENT NO. 1046169 AND FILED IN D-283E

PART OF THE NW 1/4 - SE 1/4 AND NE 1/4 - SE 1/4 OF SECTION 33, ALSO PART OF LOT 1 OF C.S.M. 2835, ALL IN T13N, R6E, THE TOWN OF DELTON, SAUK COUNTY, WISCONSIN

RELOCATION ORDER USH 12 - LAKE DELTON - SAUK CITY (FERN DELL ROAD - GIEBEL COURT) SAUK COUNTY

TO PROPERLY ESTABLISH, LAY OUT, WIDEN, ENLARGE, EXTEND, CONSTRUCT, RECONSTRUCT, IMPROVE, OR MAINTAIN A PORTION OF THE HIGHWAY DESIGNATED ABOVE, THE STATE OF WISCONSIN DEPARTMENT OF TRANSPORTATION DEEMS IT NECESSARY TO RELOCATE OR CHANGE SAID HIGHWAY AND ACQUIRE CERTAIN LANDS AND INTERESTS OR RIGHTS IN LANDS FOR THE ABOVE PROJECT.

TO EFFECT THIS CHANGE, PURSUANT TO AUTHORITY GRANTED UNDER SECTION 84.02 (3) AND 84.09, WISCONSIN STATUTES, THE DEPARTMENT OF TRANSPORTATION HEREBY ORDERS THAT:
1. THAT PORTION OF SAID HIGHWAY AS SHOWN ON THIS PLAT IS LAID OUT AND ESTABLISHED TO THE LINES AND WIDTHS AS SO SHOWN FOR THE ABOVE PROJECT.
2. THE LANDS OR INTERESTS OR RIGHTS IN LANDS AS SHOWN ON THIS PLAT ARE REQUIRED BY THE DEPARTMENT FOR THE ABOVE PROJECT AND SHALL BE ACQUIRED IN THE NAME OF THE STATE OF WISCONSIN, PURSUANT TO THE PROVISIONS OF SECTION 84.09 (1) OR (2), WISCONSIN STATUTES.

WISCONSIN DELLS INVESTMENT LLC

SPECIAL DITCH LT

P.L.

GRIFFIN WESTERMAN

STA. 147+30, LT REMOVING SMALL PIPE CULVERT REQ'D

STA. 148+06'ZAP', CL REMOVING SMALL PIPE CULVERT REQ'D

P.L.

GRIFFIN WESTERMAN

N

SLOPE INTERCEPT (TYP.)

FRONTIER COMMUNICATIONS

T.L.E.

STA. 145+90'ZAP', CL REMOVING SMALL PIPE CULVERT REQ'D

T.L.E.

CONTRACTOR AND ENGINEER SHALL DISCUSS DRIVEAY LOCATIONS FOR THE WESTERMAN AND MATERNUCH PROPERTIES WITH THE VILLAGE OF LAKE DELTON PRIOR TO PLACING CURB AND GUTTER

STA. 143+93.90 'SU' =
STA. 143+93.90 'ZAP'

MATCH LINE STA. 143+50'SU'

REMOVING CURG AND GUTTER REQ'D

10-FOOT MULTIUSE PATH

CAUTION

ALLIANT ENERGY

EXISTING R/W

CONCRETE CURB AND GUTTER 30-INCH TYPE D

144+00'ZAP' 145+00'ZAP' 146+00'ZAP' 147+00'ZAP' 148+00'ZAP' 149+00'ZAP'

ZAP DRIVE

MATCH LINE STA. 149+50'ZAP'

CONCRETE CURB AND GUTTER 24-INCH

SPECIAL DITCH RT

CONC ASPH

CONC ASPH

EXISTING R/W

CONC ASPH

CONC ASPH

SPECIAL DITCH RT

PROTECT/GRADE AROUND TREES

T.L.E.

T.L.E.

GASSER ROAD

CHARTER COMMUNICATIONS

VILLAGE OF LAKE DELTON

FRONTIER COMMUNICATIONS

SLOPE CURB HEAD TO MATCH 8% MAX SLOPE FOR CONCRETE SIDEWALK 5-INCH

REMOVING CURG AND GUTTER AND REMOVING SIDEWALK REQ'D

BEGIN CONSTRUCTION
STA. 144+01.35

ZAPCO LLC

STA. 145+69, RT CONSTRUCT C.E. REMOVING SMALL PIPE CULVERT REQ'D 22.5' WIDE ASPH.

P.L.

STA. 146+08, RT CONSTRUCT C.E. 25.5' WIDE ASPH.

ALLEN M. & NANYA PENTELL

STA. 147+30, RT CONSTRUCT C.E. REMOVING SMALL PIPE CULVERT REQ'D 25' WIDE ASPH.

P.L.

STA. 147+80, RT CONSTRUCT C.E. REMOVING SMALL PIPE CULVERT REQ'D 27' WIDE ASPH.

A LA MODE LLC

5

5

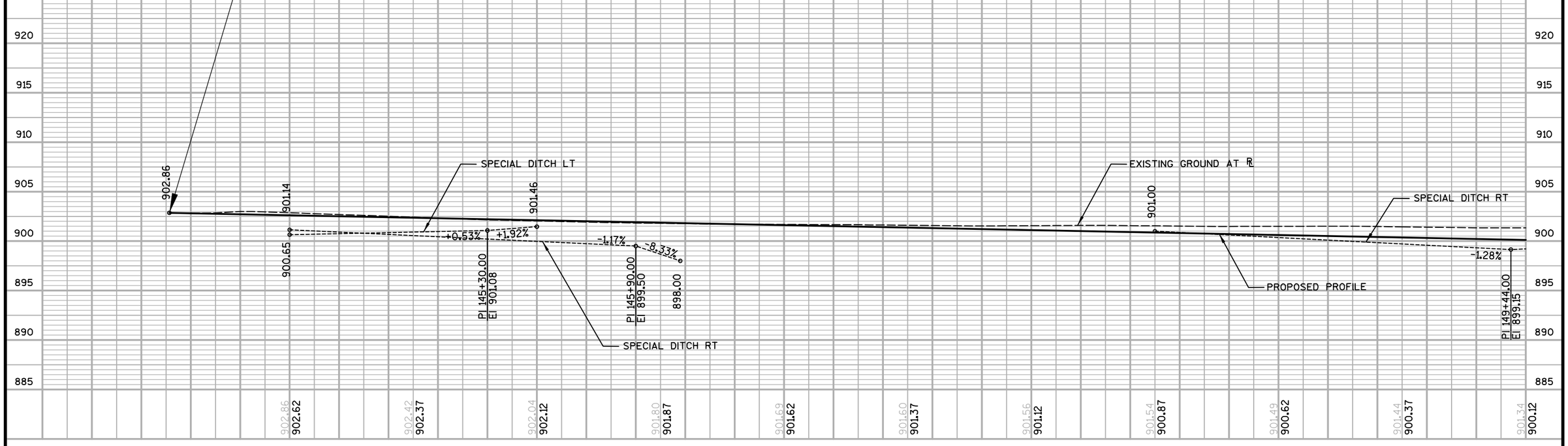

PROJECT NO: 1674-00-70	HWY: US 12	COUNTY: SAUK	PLAN AND PROFILE: ZAP DRIVE	SHEET 80	E

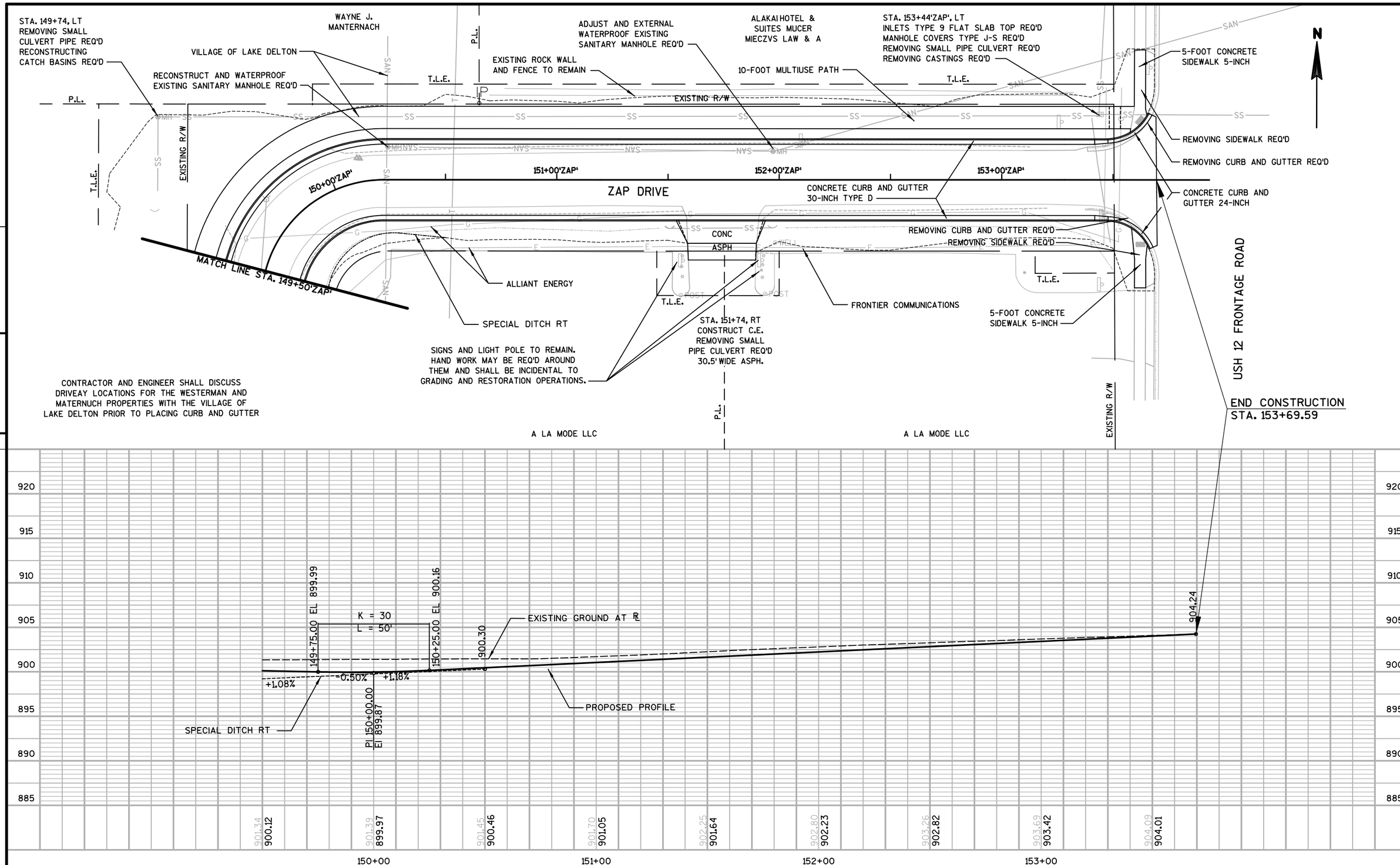

PROJECT NO:1674-00-70	HWY:US 12	COUNTY:SAUK	PLAN AND PROFILE: ZAP DRIVE	SHEET 81	E

FILE NAME : S:\MAD\1000--1099\1089\150\Micros\Design\Ishnala Bikepath\Plan\050102_pp.dgn PLOT DATE : 11/26/2013 PLOT BY : _username_ PLOT NAME : PLOT SCALE : $$.....plotscale.....$$ WISDOT/CADDS SHEET 40

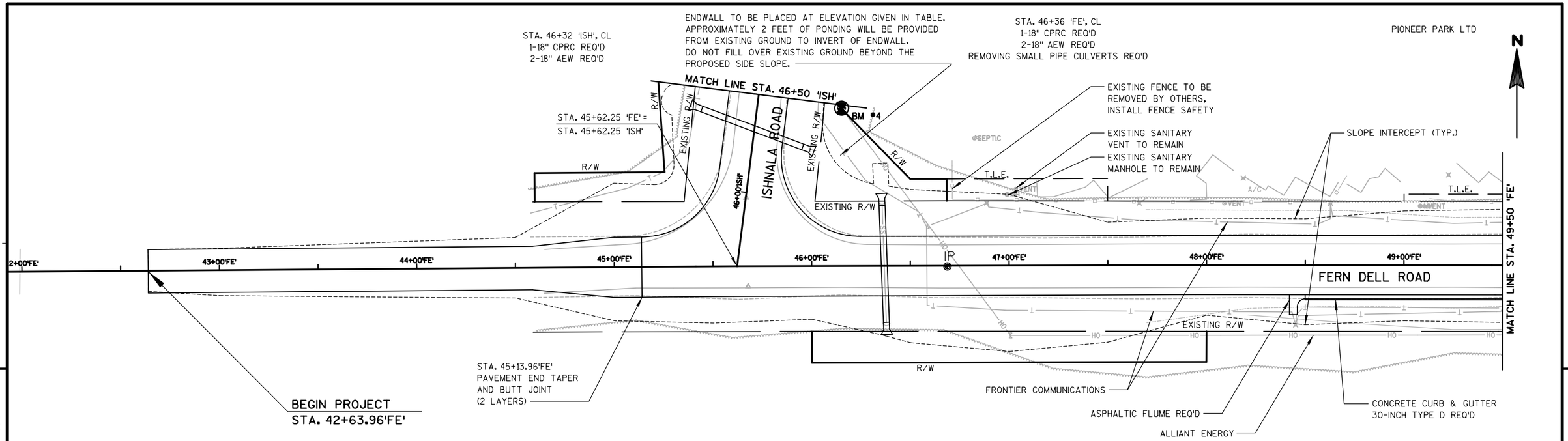

BENCH MARKS

NO.	STATION, OFFSET	DESCRIPTION	ELEV.
4	46+48.37'ISH'/42.49' RT	SPIKE IN WEST FACE OF POWER POLE	928.34
3	54+82.19'FE'/35.08' RT	SPIKE IN NORTH FACE OF POWER POLE	962.03

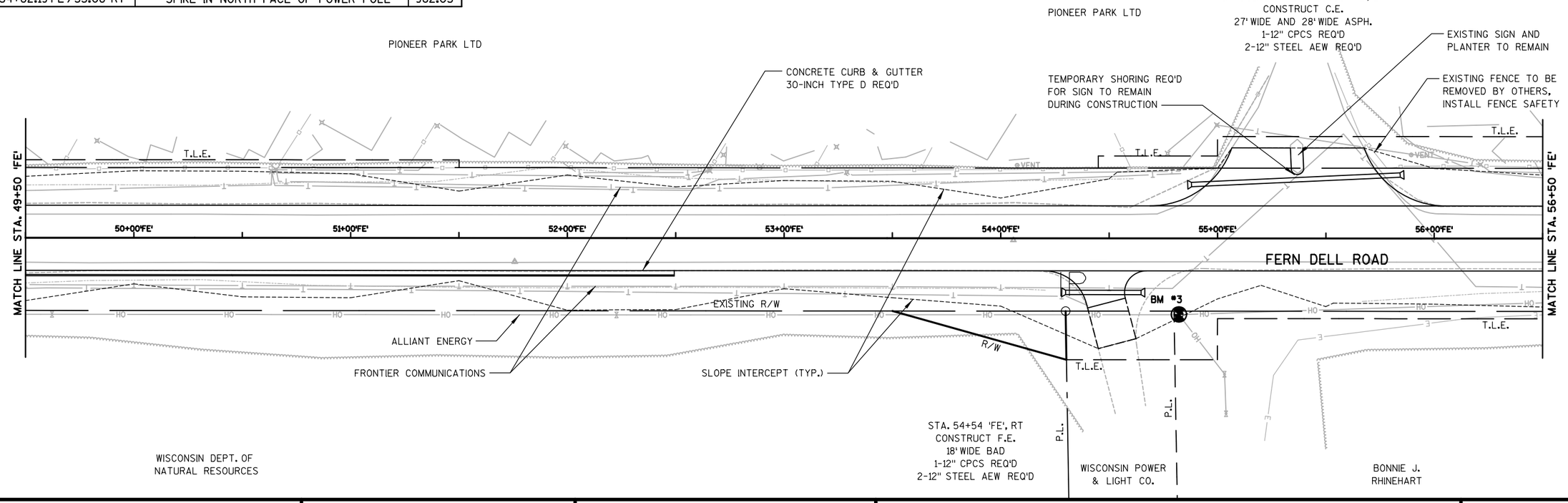

PROJECT NO: 1674-00-70	HWY: US 12	COUNTY: SAUK	PLAN SHEET: FERN DELL ROAD	SHEET 82	E

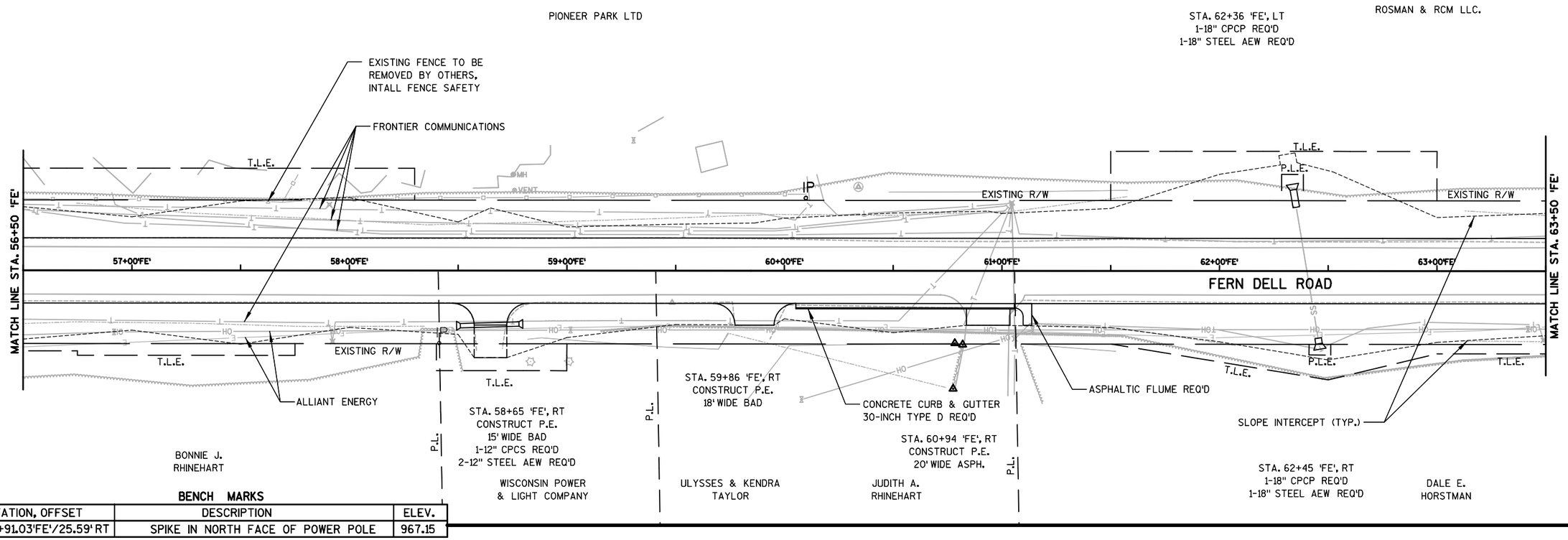

BENCH MARKS

NO.	STATION, OFFSET	DESCRIPTION	ELEV.
2	65+91.03'FE'/25.59'RT	SPIKE IN NORTH FACE OF POWER POLE	967.15

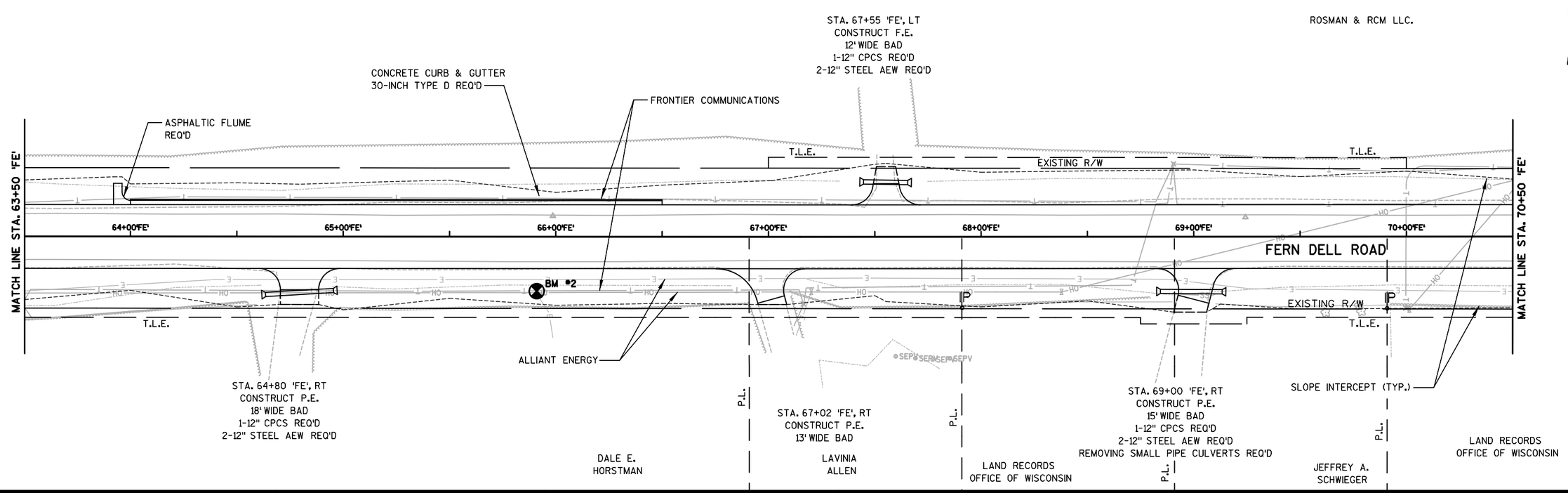

PROJECT NO: 1674-00-70	HWY: US 12	COUNTY: SAUK	PLAN SHEET: FERN DELL ROAD	SHEET 83	E

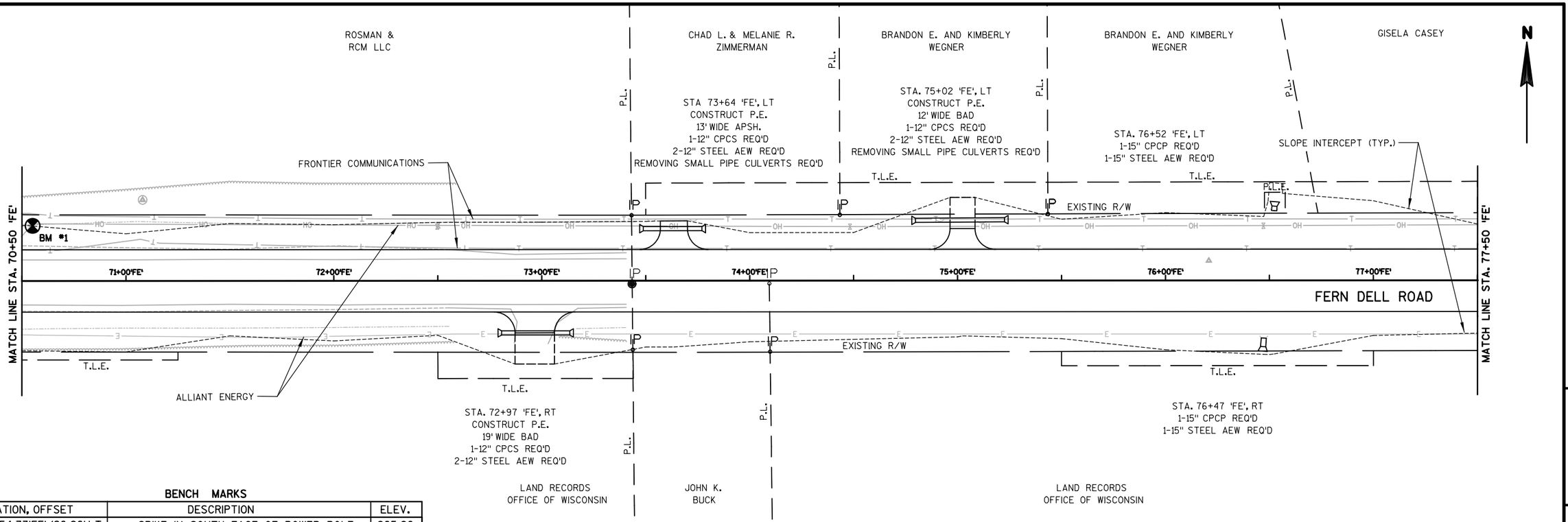

BENCH MARKS

NO.	STATION, OFFSET	DESCRIPTION	ELEV.
1	70+54.33'FE'/26.96'LT	SPIKE IN SOUTH FACE OF POWER POLE	965.96

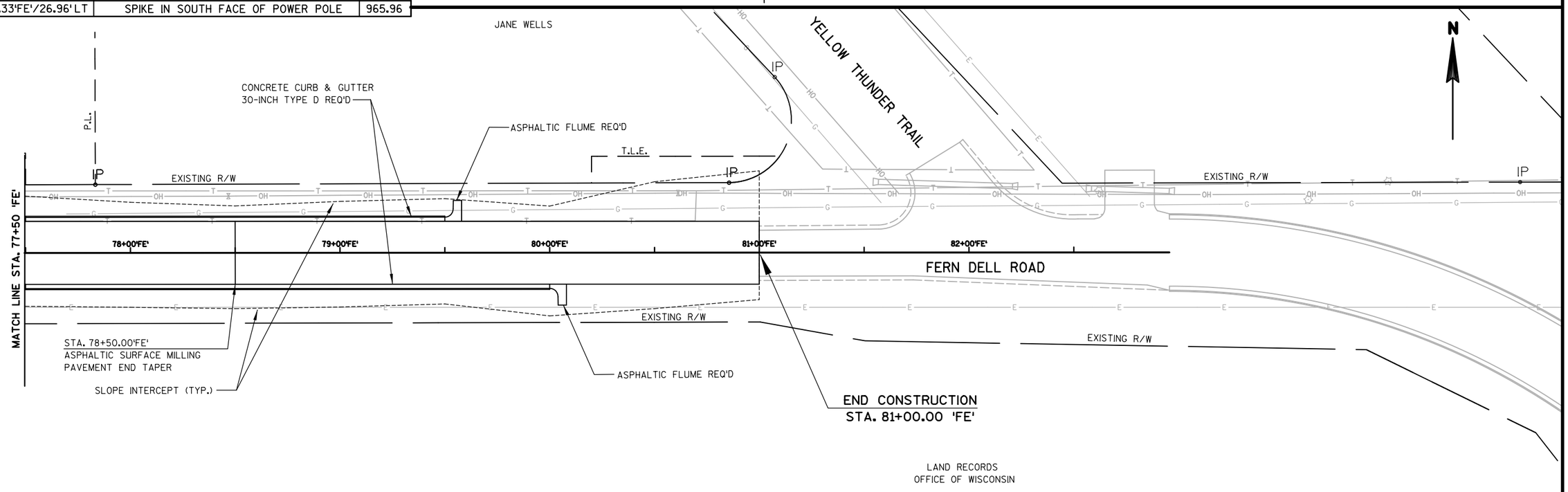

PROJECT NO: 1674-00-70	HWY: US 12	COUNTY: SAUK	PLAN SHEET: FERN DELL ROAD	SHEET 84 E

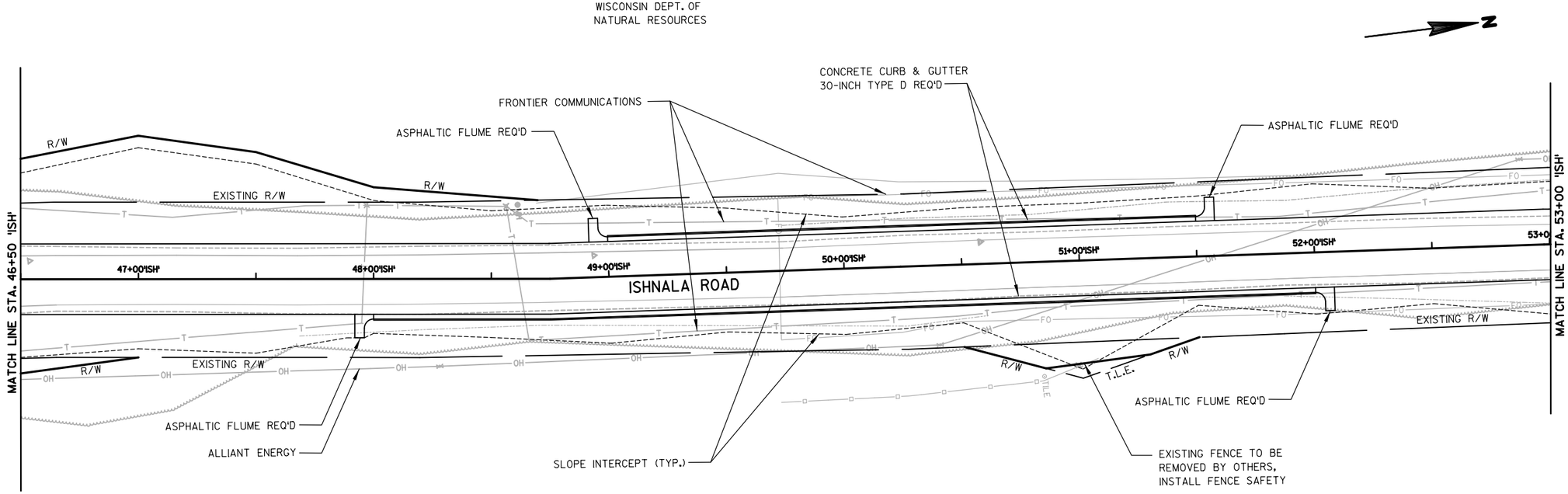

BENCH MARKS

NO.	STATION, OFFSET	DESCRIPTION	ELEV.
4	46+18.37'ISH'/42.49' RT	SPIKE IN WEST FACE OF POWER POLE	928.34
5	58+07.47'ISH'/29.79' RT	SPIKE IN WEST FACE OF POWER POLE	915.98

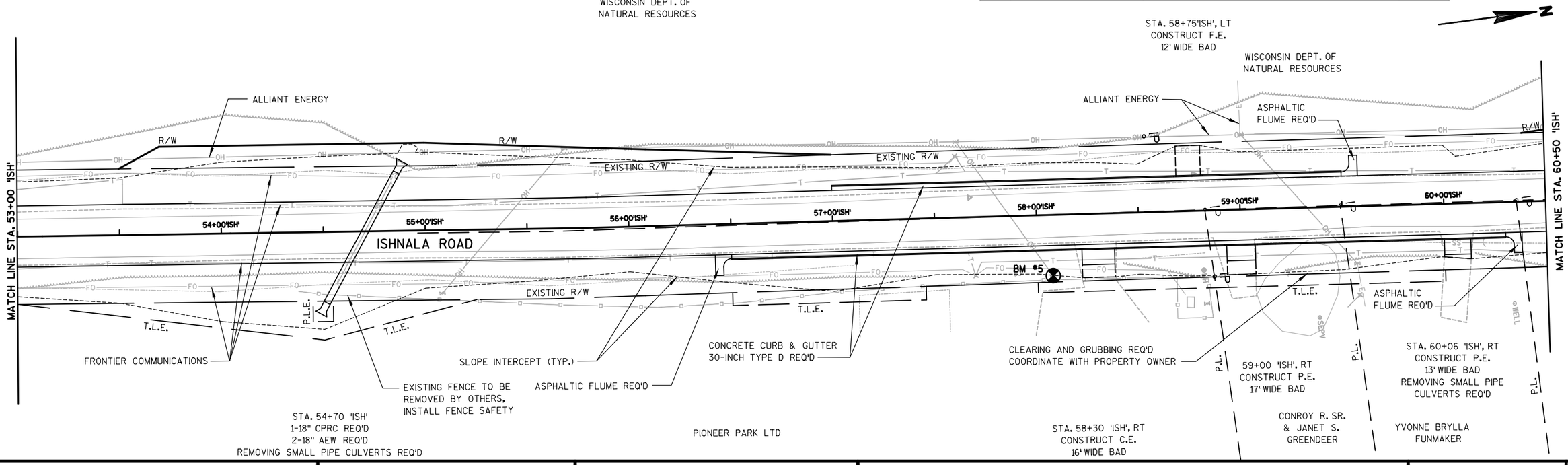

PROJECT NO: 1674-00-70	HWY: US 12	COUNTY: SAUK	PLAN SHEET: ISHNALA ROAD	SHEET 85	E

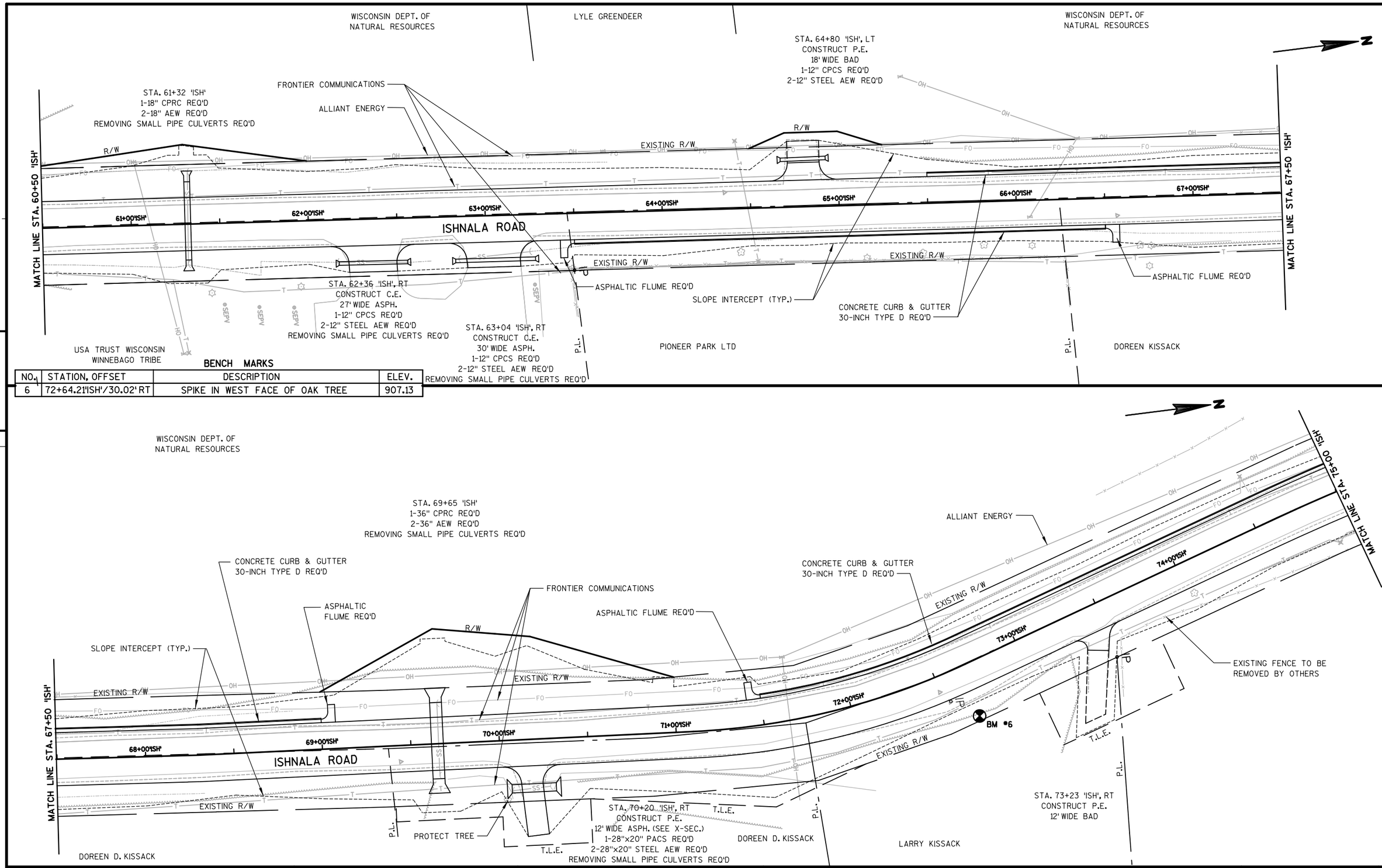

BENCH MARKS

NO.	STATION, OFFSET	DESCRIPTION	ELEV.
6	72+64.21'ISH'/30.02' RT	SPIKE IN WEST FACE OF OAK TREE	907.13

PROJECT NO: 1674-00-70	HWY: US 12	COUNTY: SAUK	PLAN SHEET: ISHNALA ROAD	SHEET 86 E

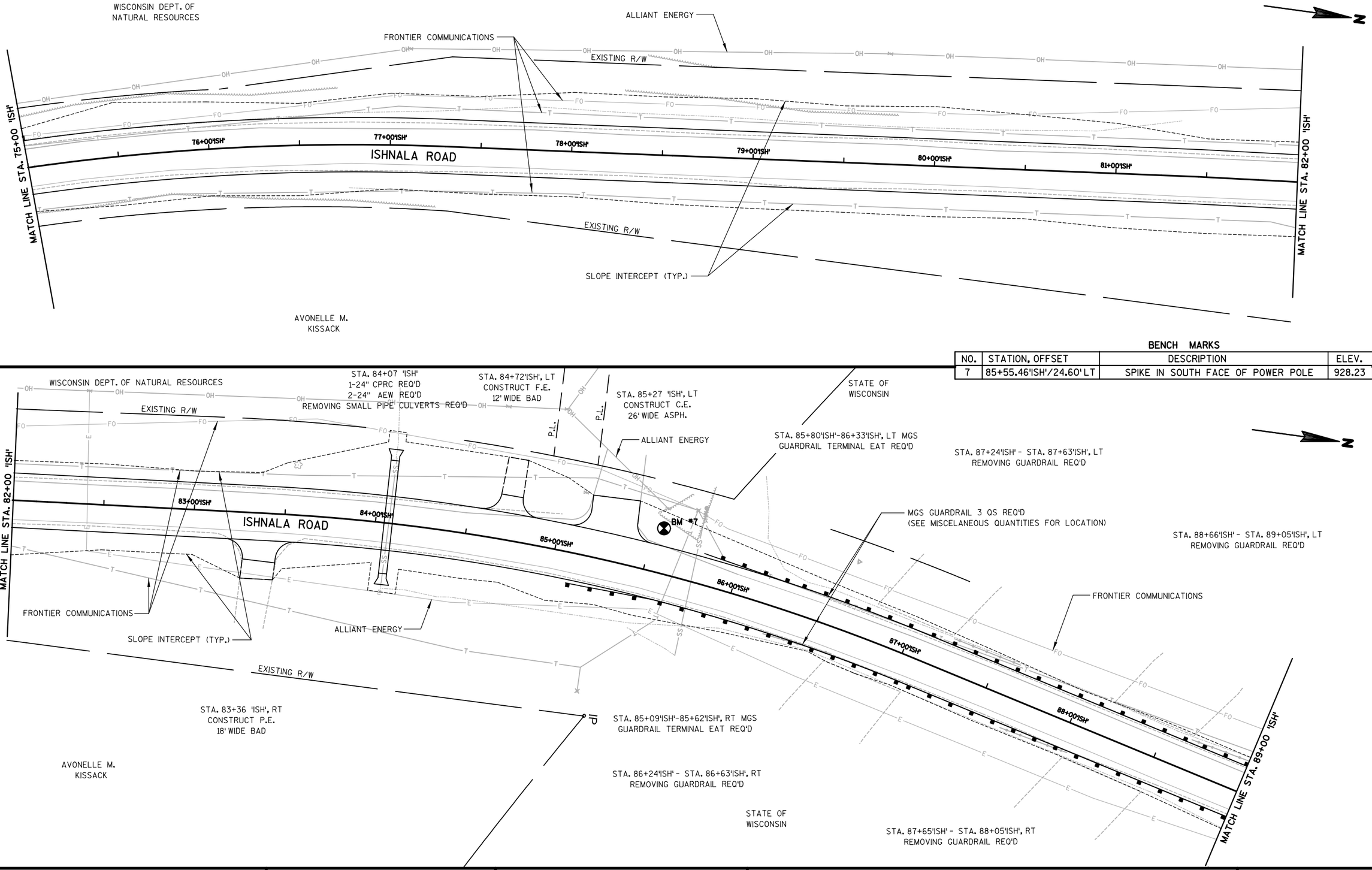

BENCH MARKS

NO.	STATION, OFFSET	DESCRIPTION	ELEV.
7	85+55.46'ISH'/24.60'LT	SPIKE IN SOUTH FACE OF POWER POLE	928.23

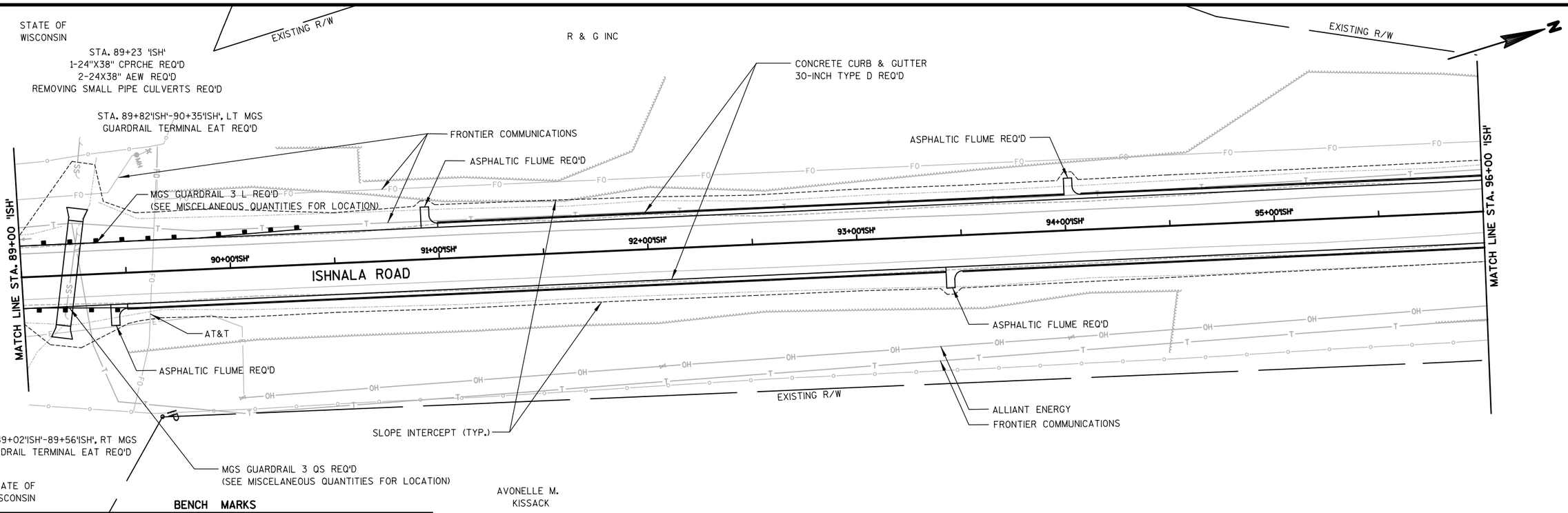

BENCH MARKS

NO.	STATION, OFFSET	DESCRIPTION	ELEV.
8	99+88.51'GA'/28.66' LT	SPIKE IN WEST FACE OF POWER POLE	965.84

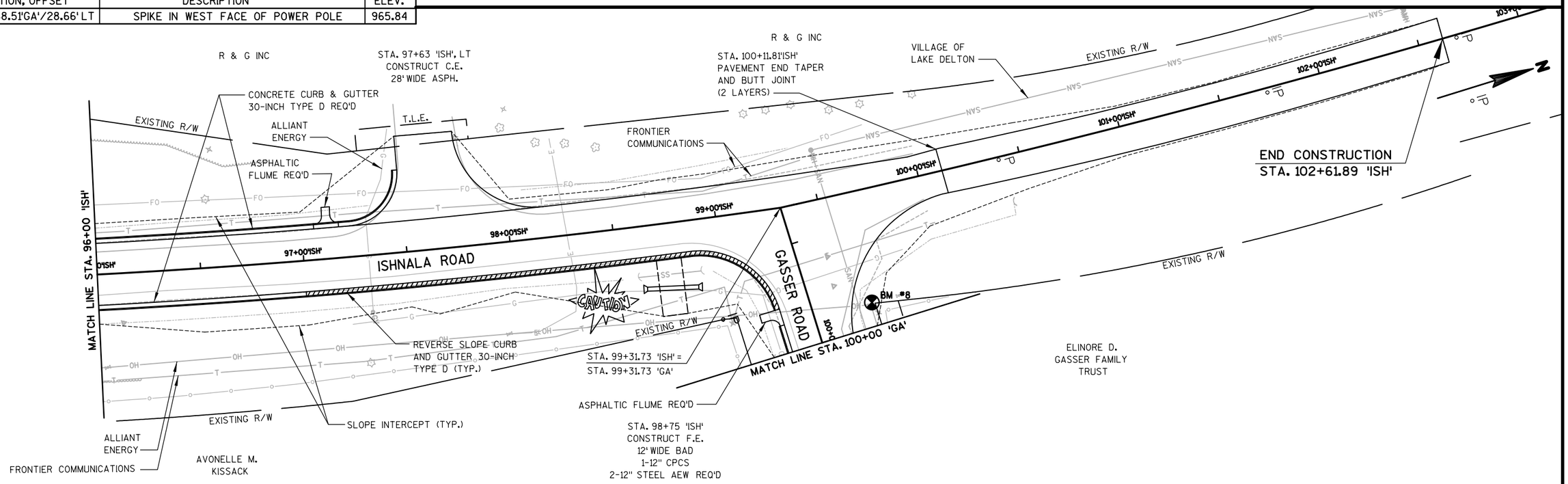

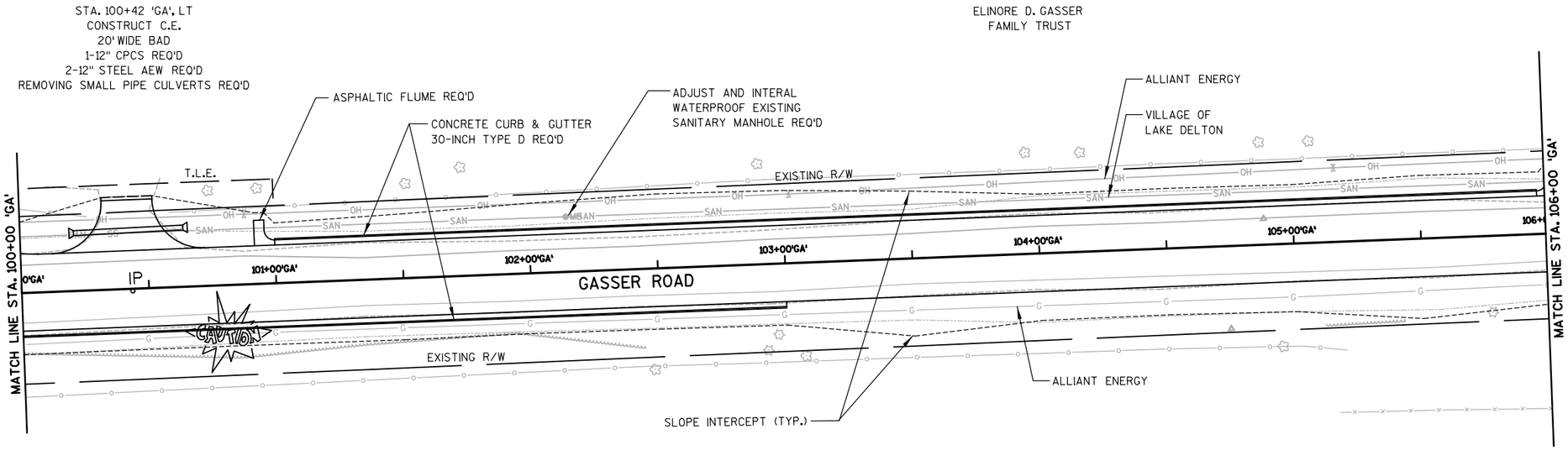

5

5

AVONEELE M.
KISSACK

BENCH MARKS

NO.	STATION, OFFSET	DESCRIPTION	ELEV.
9	110+01.43'GA'/29.19' LT	SPIKE IN GUY POLE	966.69

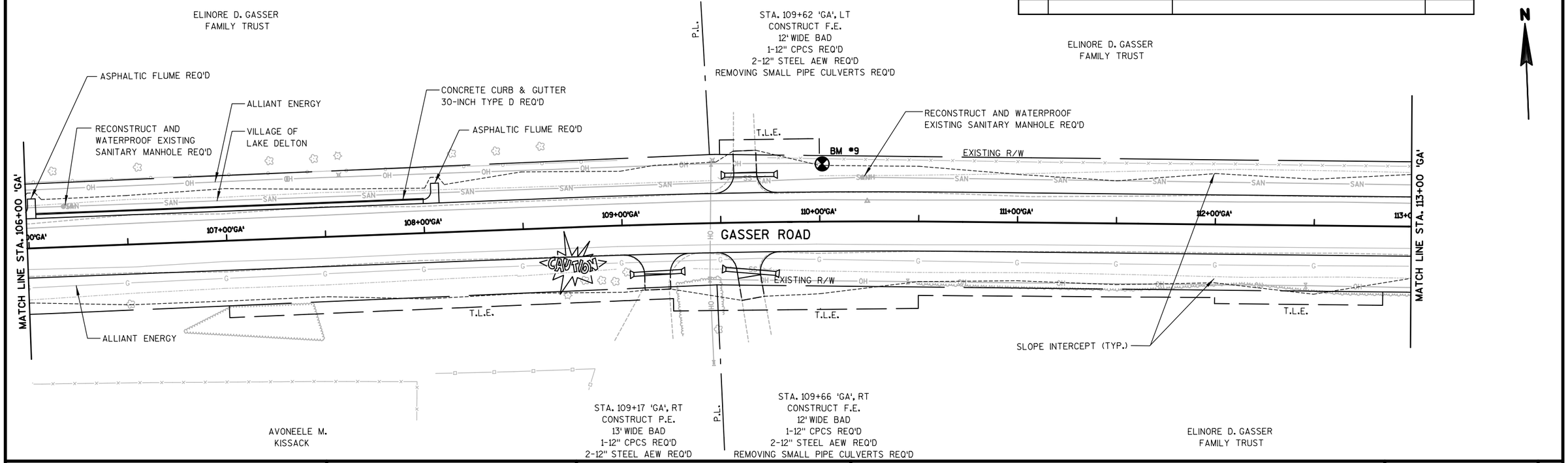

PROJECT NO: 1674-00-70	HWY: US 12	COUNTY: SAUK	PLAN SHEET: GASSER ROAD	SHEET	E

FILE NAME : S:\MAD\1000--1099\1089\150\Micros\Design\Ishnala Bikepath\Plan\050208_pn.dgn PLOT DATE : 11/26/2013 PLOT BY : _username_ PLOT NAME : PLOT SCALE : $$.....plotscale.....$$ WISDOT/CADDS SHEET 44

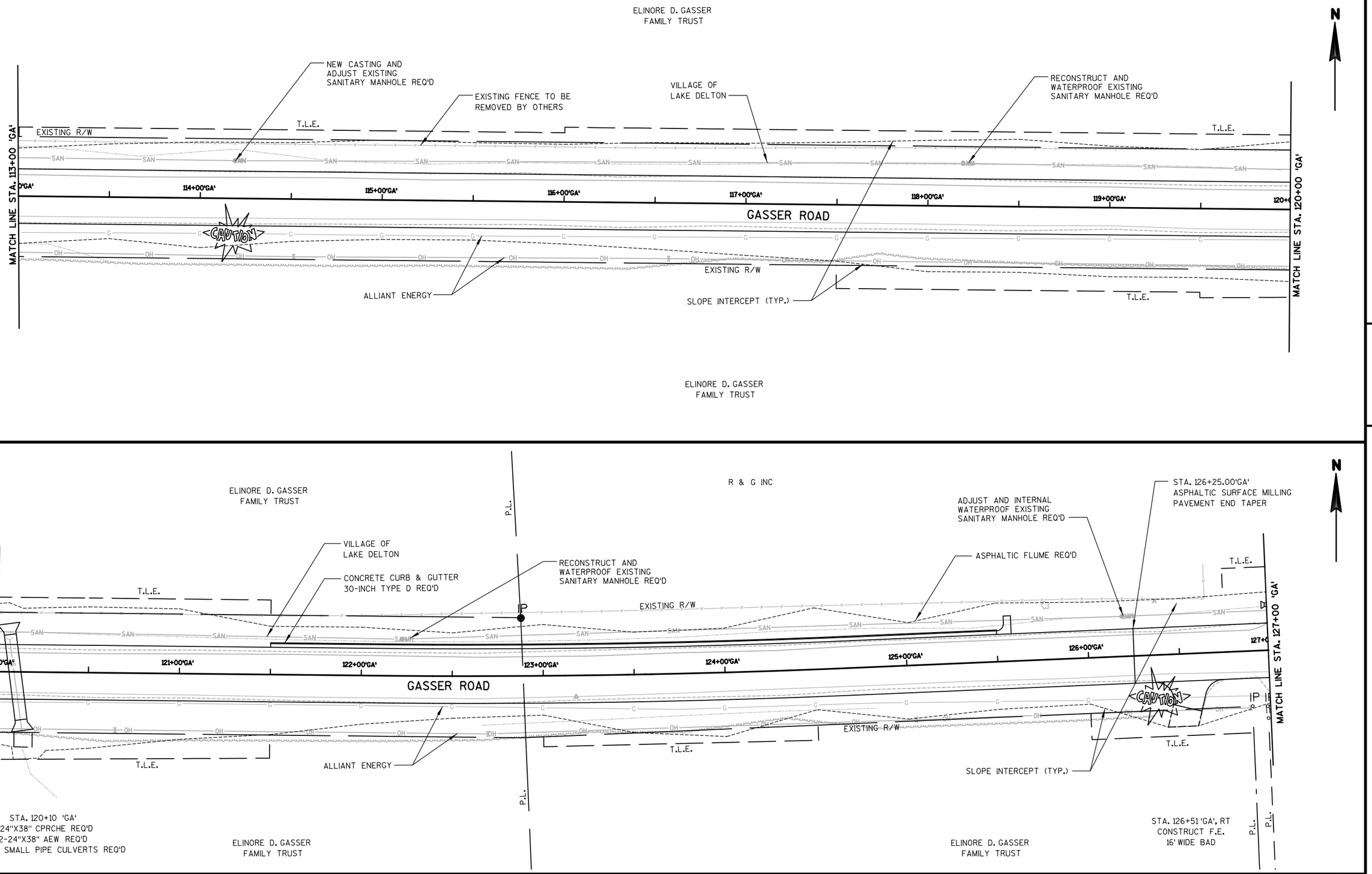

PROJECT NO: 1674-00-70	HWY: US 12	COUNTY: SAUK	PLAN SHEET: GASSER ROAD	SHEET 90	E

FILE NAME : S:\MAD\1000--1099\1089\150\Micros\Design\Ishnala Bikepath\Plan\050209_pn.dgn PLOT DATE : 11/26/2013 PLOT BY : _username_ PLOT NAME : PLOT SCALE : $$.....plotscale.....$$

WISDOT/CADDS SHEET 44

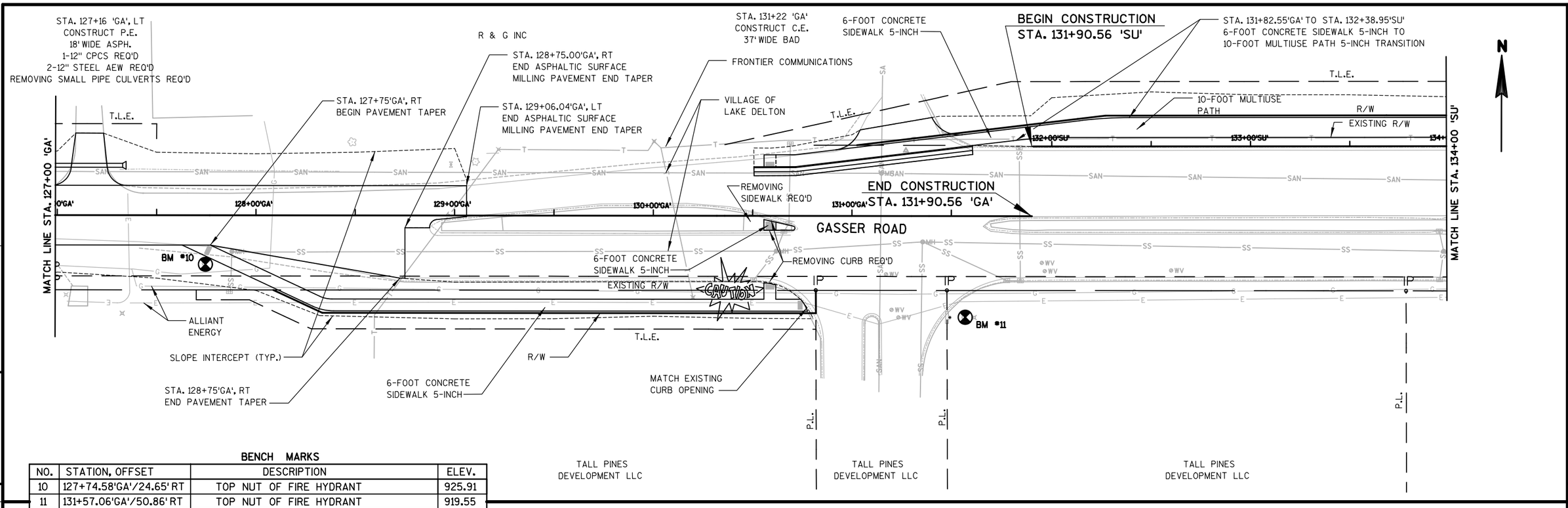

BENCH MARKS

NO.	STATION, OFFSET	DESCRIPTION	ELEV.
10	127+74.58'GA'/24.65' RT	TOP NUT OF FIRE HYDRANT	925.91
11	131+57.06'GA'/50.86' RT	TOP NUT OF FIRE HYDRANT	919.55
12	135+43.54'SU'/70.19' RT	TOP NUT OF FIRE HYDRANT	908.27
13	140+08.54'SU'/73.66' RT	TOP OF NW CORNER OF SIGN BASE	905.17

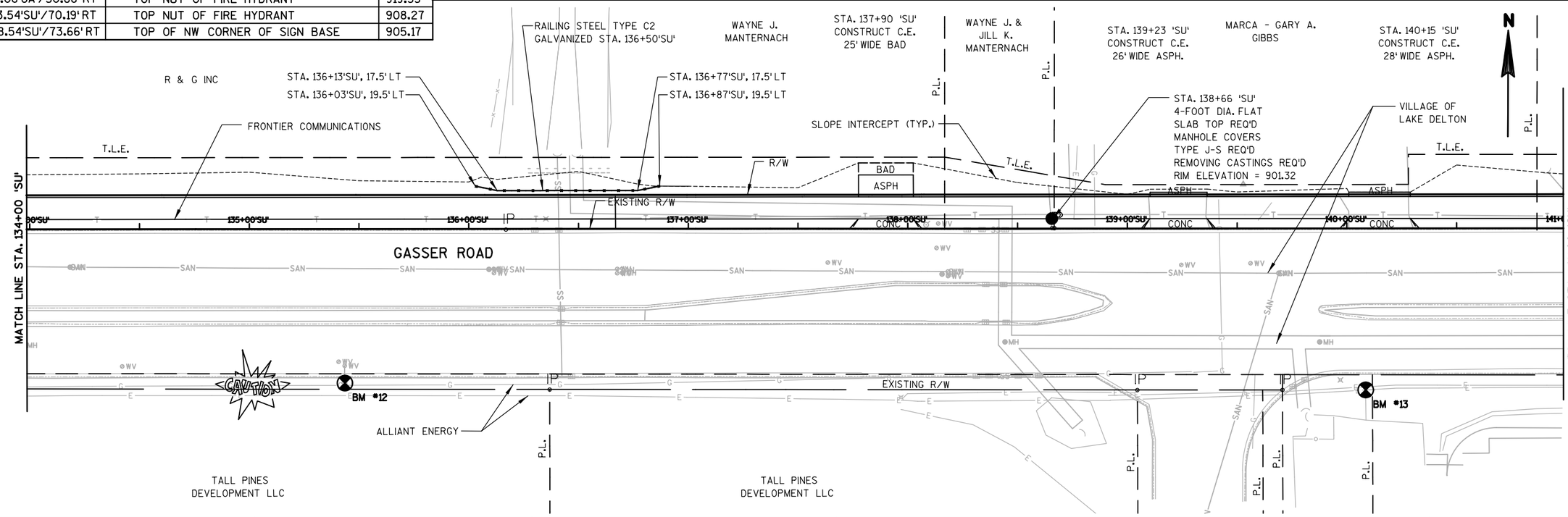

PROJECT NO: 1674-00-70	HWY: US 12	COUNTY: SAUK	PLAN SHEET: GASSER ROAD	SHEET	E

FILE NAME : S:\MAD\1000--1099\1089\150\Micros\Design\Ishnala Bikepath\Plan\050210_pn.dgn
PLOT DATE : 11/26/2013
PLOT BY : _username_
PLOT NAME :
PLOT SCALE : $$.....plotscale.....$$
WISDOT/CADDS SHEET 44

BENCH MARKS

NO.	STATION, OFFSET	DESCRIPTION	ELEV.
14	143+67.31'SU'/81.05' RT	TOP NUT OF FIRE HYDRANT	905.66
15		TOP NUT OF FIRE HYDRANT AT SW CORNER OF GASSER ROAD AND WISCONSIN DELLS PARKWAY	914.09

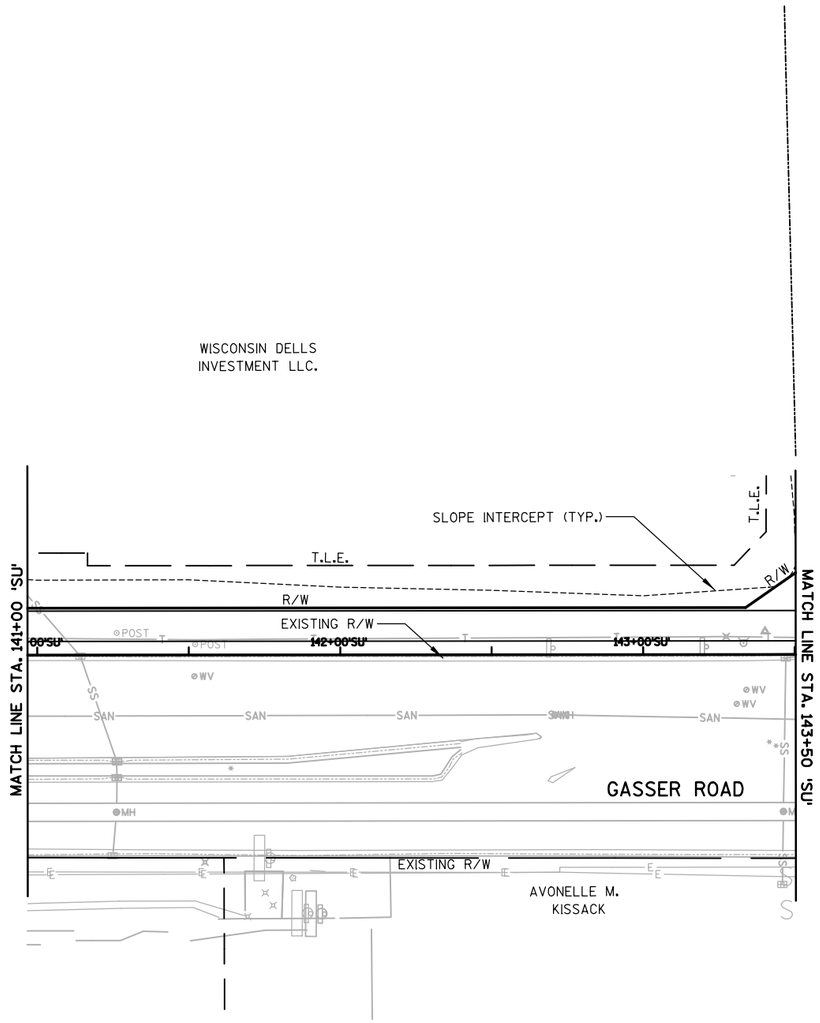

Standard Detail Drawing List

08A05-19A	INLET COVERS TYPE A, H, A-S, H-S & Z
08A05-19B	INLET COVERS TYPE B, B-A, C, MS, MS-A, & WM
08A05-19D	INLET COVER TYPE BW, MANHOLE COVERS, TYPE K, J, J-S, L & M
08B09-01	MANHOLES 3-FT, 4-FT, 5-FT, 6-FT, 7-FT AND 8-FT DIAMETER
08C07-01	INLETS 2X2-FT, 2X2.5-FT, 2X3-FT AND 2.5X3-FT
08C08-01	INLETS MEDIAN 1 AND 2 GRATE
08D01-17	CONCRETE CURB, CONCRETE CURB AND GUTTER AND TIES
08D04-05	CONCRETE SURFACE DRAINS & ASPHALTIC FLUMES
08D05-15A	CURB RAMPS TYPES 1 AND 1-A
08D05-15B	CURB RAMPS TYPES 2 AND 3
08D05-15C	CURB RAMPS TYPES 4A AND 4A1
08D05-15D	CURB RAMPS TYPE 4B AND 4B1
08D05-15E	CURB RAMPS TYPES 5, 6, 7A, 7B & 8
08E08-03	TYPICAL INSTALLATIONS OF EROSION BALES / TEMPORARY DITCH CHECKS
08E09-06	SILT FENCE
08E10-02	INLET PROTECTION TYPE A, B, C AND D
08F01-11	APRON ENDWALLS FOR CULVERT PIPE
08F02-01	APRON ENDWALLS FOR PIPE ARCH AND ELLIPTICAL PIPE
08F04-07	JOINT TIES FOR CONCRETE PIPE AND CONCRETE COLLAR DETAIL
14B42-02A	MIDWEST GUARDRAIL SYSTEM (MGS) GUARDRAIL
14B42-02B	MIDWEST GUARDRAIL SYSTEM (MGS) GUARDRAIL
14B42-02C	MIDWEST GUARDRAIL SYSTEM (MGS) GUARDRAIL
14B43-03A	MIDWEST GUARDRAIL SYSTEM LONG SPAN MGS (L)
14B43-03B	MIDWEST GUARDRAIL SYSTEM LONG SPAN MGS (L)
14B43-03C	MIDWEST GUARDRAIL SYSTEM LONG SPAN MGS (L)
14B44-01A	MIDWEST GUARDRAIL SYSTEM ENERGY ABSORBING TERMINAL (MGS)
14B44-01B	MIDWEST GUARDRAIL SYSTEM ENERGY ABSORBING TERMINAL (MGS)
14B44-01C	MIDWEST GUARDRAIL SYSTEM ENERGY ABSORBING TERMINAL (MGS)
15A03-02A	FLEXIBLE MARKER POST FOR CULVERT END
15A03-02B	FLEXIBLE MARKER POST FOR CULVERT END
15B03-13A	FENCE CHAIN LINK
15B03-13B	FENCE CHAIN LINK
15C02-05A	BARRICADES AND SIGNS FOR MAINLINE CLOSURES
15C02-05B	BARRICADES AND SIGNS FOR MAINLINE CLOSURES
15C03-02	BARRICADES AND SIGNS FOR SIDEROAD CLOSURES
15C04-02	TRAFFIC CONTROL, ADVANCE WARNING SIGNS 45 M.P.H. OR GREATER TWO-WAY UNDIVIDED ROAD OPEN TO TRAFFIC
15C08-16A	PAVEMENT MARKING (MAINLINE)
15C08-16B	PAVEMENT MARKING (INTERSECTIONS)
15C08-16F	PAVEMENT MARKING (ISLANDS)
15C12-04	TRAFFIC CONTROL FOR LANE CLOSURE (SUITABLE FOR MOVING OPERATIONS)
15C33-01	STOP LINE AND CROSSWALK PAVEMENT MARKING
15D30-01	TRAFFIC CONTROL, SIDEWALK CLOSURE

6

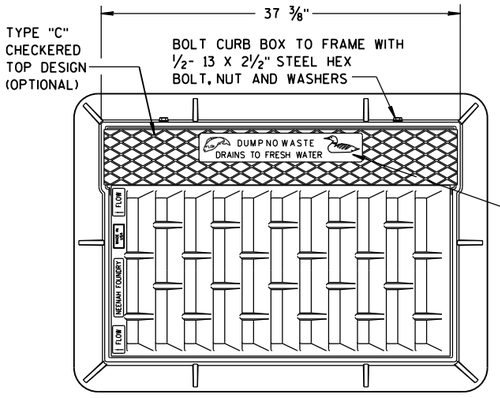

NOTE:
GRATE IS REVERSIBLE.

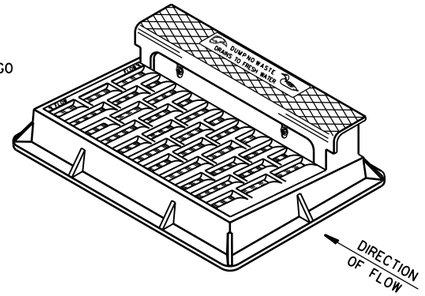

NOTE: CURB BOX HEIGHT ADJUSTABLE 6" TO 9"

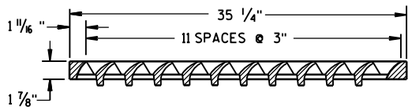

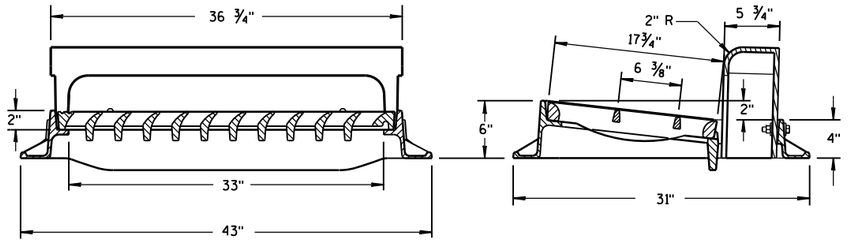

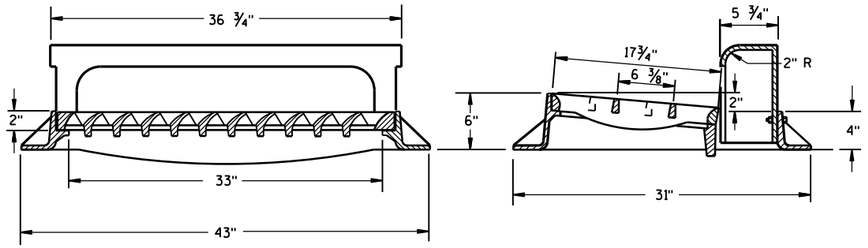

TYPE "H"

NOTE: EITHER CASTING IS ACCEPTABLE

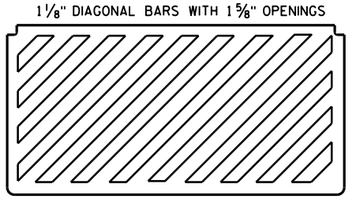

SPECIAL GRATE FOR TYPE "H" COVER

(MEASURES 35 1/4" X 17 3/4" X 2")

(NOTED AS TYPE H-S ON DRAINAGE TABLE)

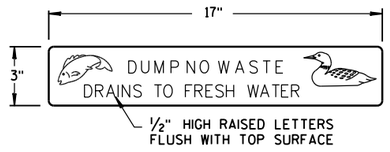

LOGO DETAIL

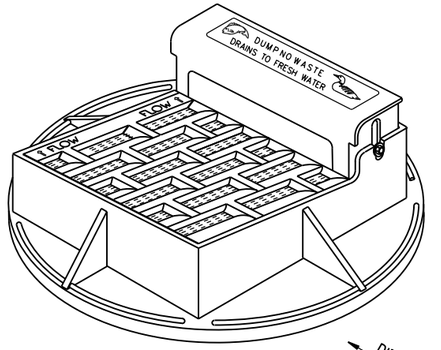

NOTE: CURB BOX ADJUSTABLE 4" TO 9"

NOTE:
GRATE IS REVERSIBLE.

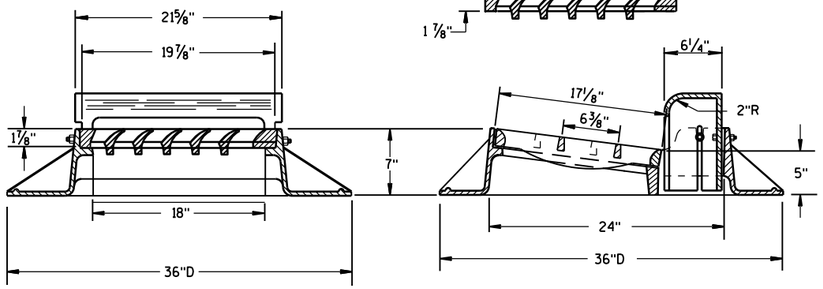

TYPE "A"

GENERAL NOTES

DETAILS OF CONSTRUCTION, MATERIALS AND WORKMANSHIP NOT SHOWN ON THIS DRAWING SHALL CONFORM TO THE PERTINENT REQUIREMENTS OF THE STANDARD SPECIFICATIONS AND THE APPLICABLE SPECIAL PROVISIONS.

DETAIL DRAWINGS FOR PROPOSED ALTERNATE DESIGNS FOR CATCH BASIN, MANHOLE AND INLET COVERS SHALL BE SUBMITTED TO THE ENGINEER FOR APPROVAL PROVIDING THAT SUCH ALTERNATE DESIGNS MAKE PROVISION FOR EQUIVALENT CAPACITY AND STRENGTH.

ROUND FRAMES AND COVERS SHALL HAVE CONTINUOUSLY MACHINED BEARING SURFACES TO PREVENT ROCKING AND RATTLING.

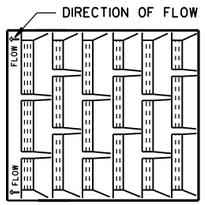

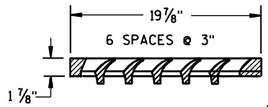

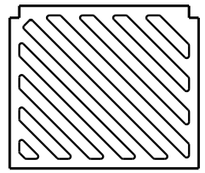

SPECIAL GRATE FOR TYPE "A" COVER

(MEASURES 19 3/4" X 17" X 1 7/8")

(NOTED AS TYPE A-S ON DRAINAGE TABLE)

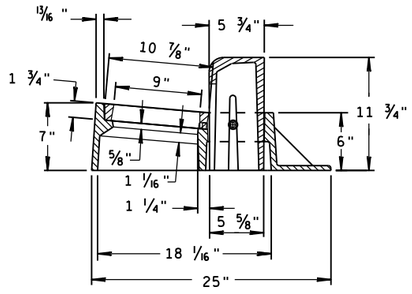

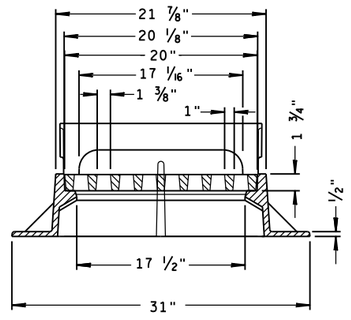

TYPE "Z"

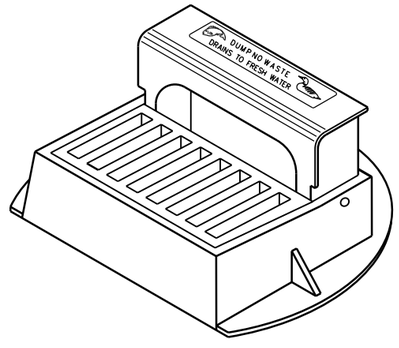

INLET COVERS
TYPE A, H, A-S, H-S & Z

STATE OF WISCONSIN
DEPARTMENT OF TRANSPORTATION

APPROVED
11-27-13 — DATE
/S/ Jerry H. Zogg — ROADWAY STANDARDS ENGINEER
FHWA

6

S.D.D. 8 A 5-19a

6

S.D.D. 8 A 5-19a

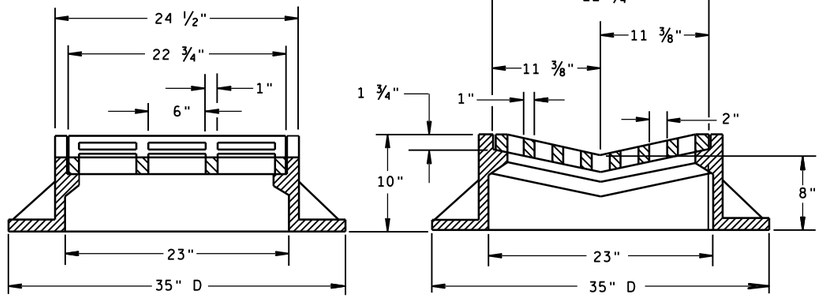

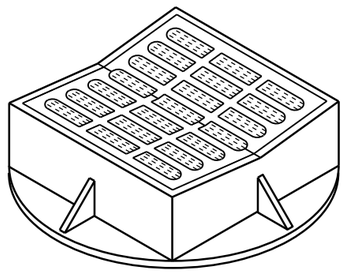

TYPE "B"

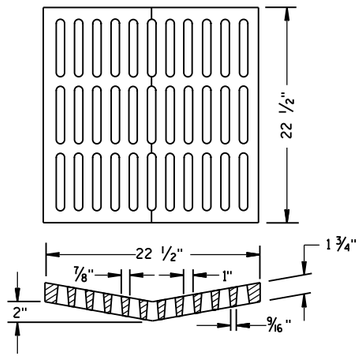

ALTERNATIVE GRATE FOR TYPE "B" COVER

USE WHERE PEDESTRIAN OR BICYCLE TRAFFIC IS POSSIBLE.

NOTED AS TYPE B-A ON THE DRAINAGE TABLE

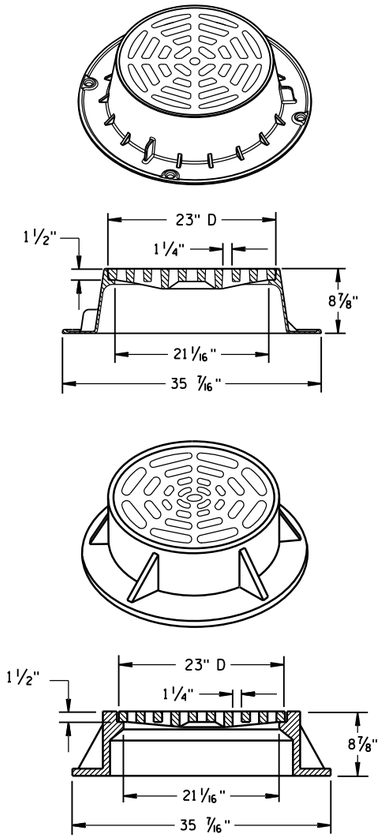

TYPE "C"

NOTE: EITHER CASTING IS ACCEPTABLE

GENERAL NOTES

DETAILS OF CONSTRUCTION, MATERIALS AND WORKMANSHIP NOT SHOWN ON THIS DRAWING SHALL CONFORM TO THE PERTINENT REQUIREMENTS OF THE STANDARD SPECIFICATIONS AND THE APPLICABLE SPECIAL PROVISIONS.

DETAIL DRAWINGS FOR PROPOSED ALTERNATE DESIGNS FOR CATCH BASIN, MANHOLE AND INLET COVERS SHALL BE SUBMITTED TO THE ENGINEER FOR APPROVAL PROVIDING THAT SUCH ALTERNATE DESIGNS MAKE PROVISION FOR EQUIVALENT CAPACITY AND STRENGTH.

ROUND FRAMES AND COVERS SHALL HAVE CONTINUOUSLY MACHINED BEARING SURFACES TO PREVENT ROCKING AND RATTLING.

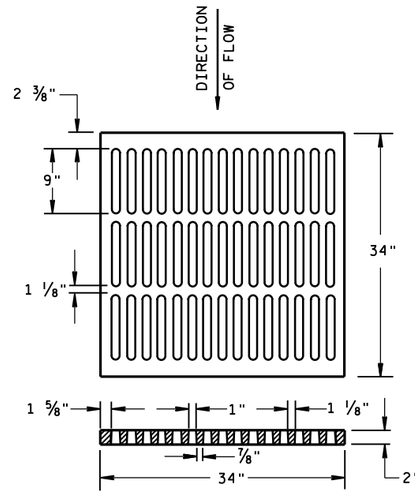

ALTERNATIVE TYPE "MS"

USE WHERE PEDESTRIAN OR BICYCLE TRAFFIC IS PERMITTED

NOTED AS TYPE MS-A ON THE DRAINAGE TABLE

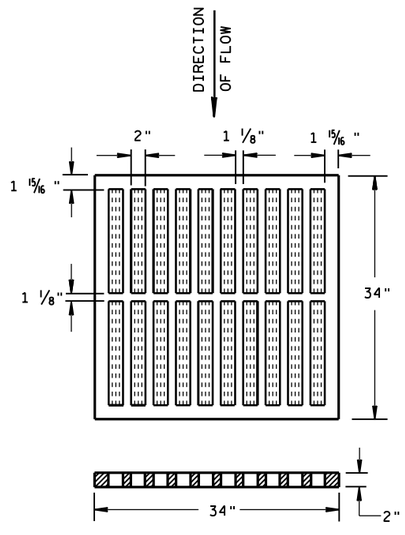

TYPE "MS"

USE ON FREEWAYS AND EXPRESSWAYS

NOTED AS TYPE MS ON DRAINAGE TABLE

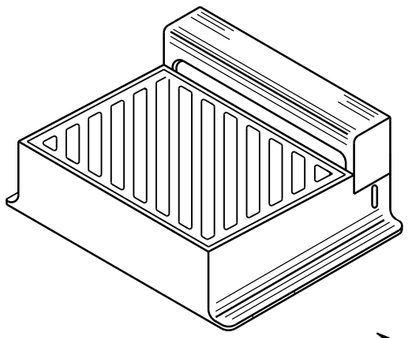

DIAGONAL SLOTS, SHALL BE ORIENTED TO THE DIRECTION OF FLOW AS ILLUSTRATED. GRATES ARE MANUFACTURED TO BE REVERSIBLE.

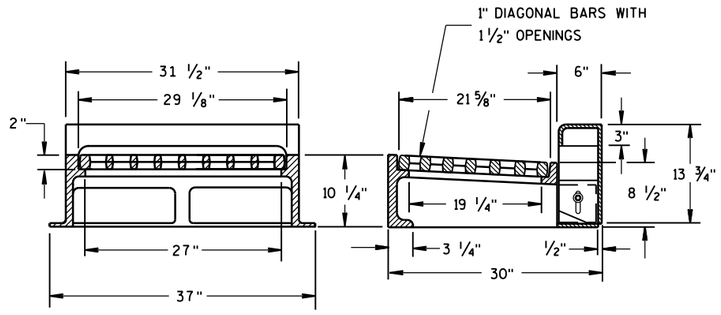

NOTE: CURB BOX HEIGHT ADJUSTABLE 6" TO 9"

TYPE "WM"

INLET COVERS
TYPE B, B-A, C, MS, MS-A, & WM

STATE OF WISCONSIN
DEPARTMENT OF TRANSPORTATION

APPROVED

11/27/2013 — DATE

/S/ Jerry H. Zogg — ROADWAY STANDARDS ENGINEER

FHWA

6

S.D.D. 8 A 5-19b

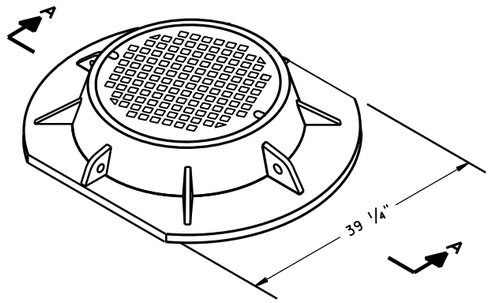

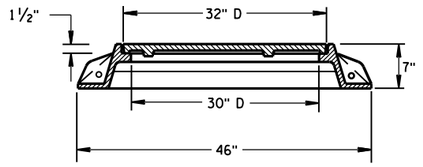

SECTION A-A
TYPE "K"

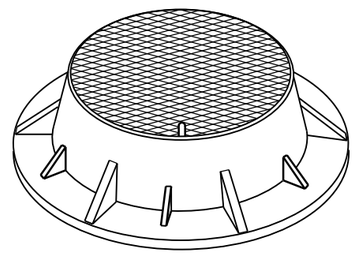

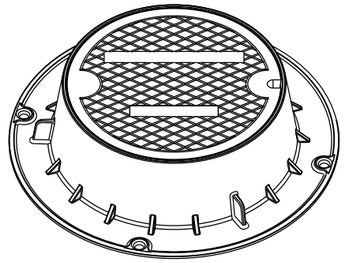

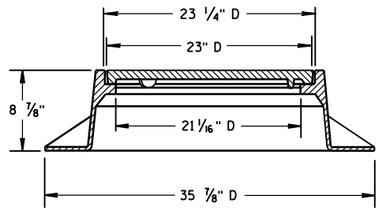

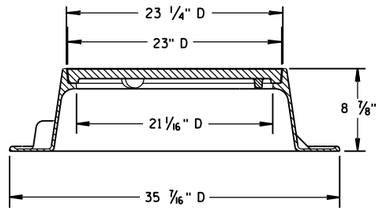

TYPE "J"
NOTE: EITHER CASTING IS ACCEPTABLE

GENERAL NOTES

DETAILS OF CONSTRUCTION, MATERIALS AND WORKMANSHIP NOT SHOWN ON THIS DRAWING SHALL CONFORM TO THE PERTINENT REQUIREMENTS OF THE STANDARD SPECIFICATIONS AND THE APPLICABLE SPECIAL PROVISIONS.

DETAIL DRAWINGS FOR PROPOSED ALTERNATE DESIGNS FOR MANHOLE COVERS SHALL BE SUBMITTED TO THE ENGINEER FOR APPROVAL PROVIDING THAT SUCH ALTERNATE DESIGNS MAKE PROVISION FOR EQUIVALENT CAPACITY AND STRENGTH.

ROUND FRAMES AND COVERS SHALL HAVE CONTINUOUSLY MACHINED BEARING SURFACES TO PREVENT ROCKING AND RATTLING.

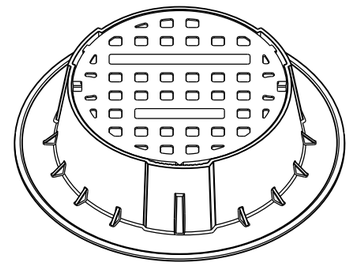

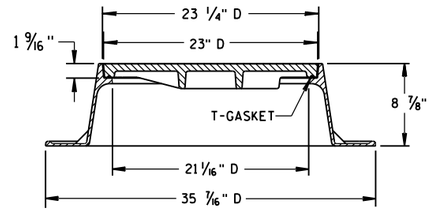

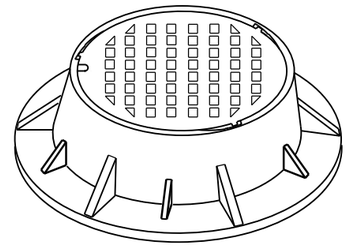

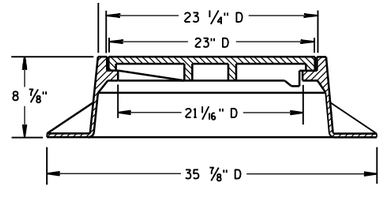

TYPE "J" SPECIAL
TYPE "B" NON-ROCKING SELF-SEAL LID
(NOTED AS TYPE J-S ON THE DRAINAGE TABLE)
NOTE: EITHER CASTING IS ACCEPTABLE

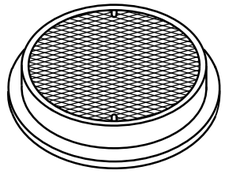

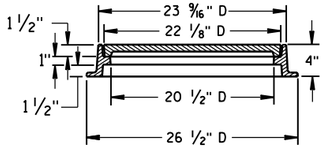

TYPE "L"

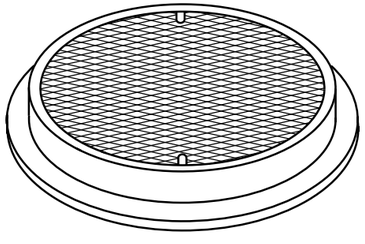

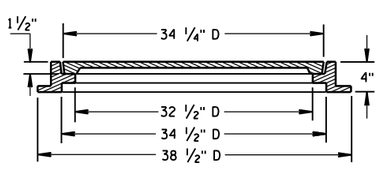

TYPE "M"

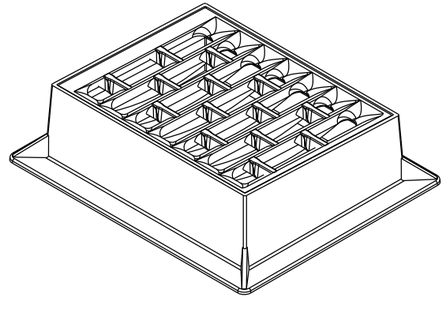

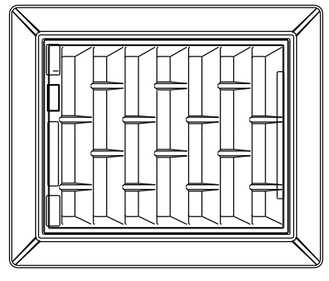

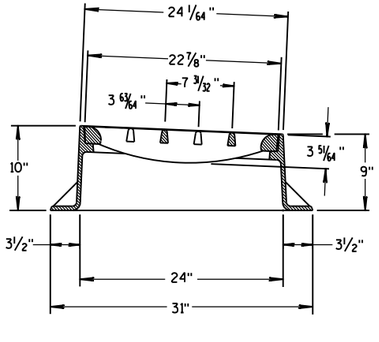

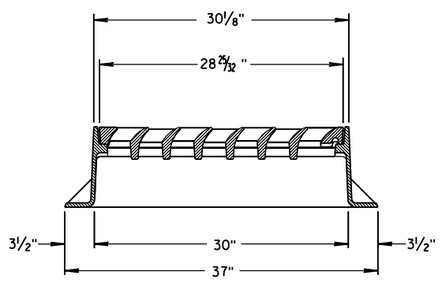

INLET COVER TYPE "BW"

INLET COVER TYPE BW
MANHOLE COVERS, TYPE K, J, J-S, L & M

STATE OF WISCONSIN
DEPARTMENT OF TRANSPORTATION

APPROVED
11/27/2013
DATE
FHWA

/S/ Jerry H. Zogg
ROADWAY STANDARDS DEVELOPMENT ENGINEER

6

S.D.D. 8 A 5-19d

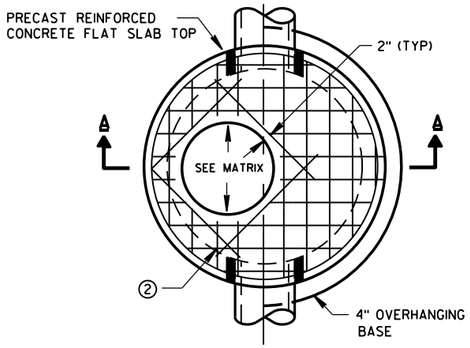

PLAN VIEW CIRCULAR OPENING

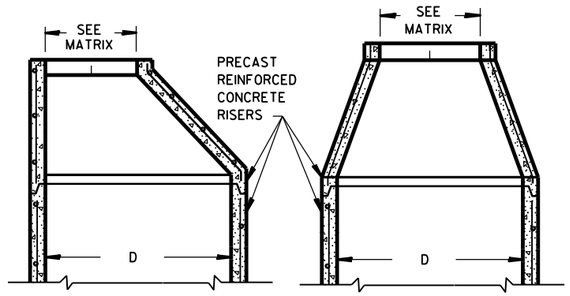

OPTIONAL PRECAST REINFORCED CONCRETE ECCENTRIC TOP

OPTIONAL PRECAST REINFORCED CONCRETE CONCENTRIC TOP

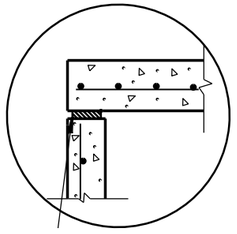

TOP WITH PLAIN END JOINT

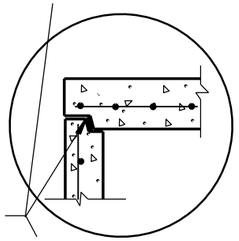

JOINTS TO BE SEALED WITH A BUTYL RUBBER SEAL PER SEALANT MANUFACTURERS RECOMMENDATIONS CONFORMING TO ASTM C990 (TYP)

TOP WITH TONGUE AND GROOVE JOINT

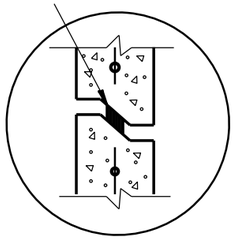

RISER WITH TONGUE AND GROOVE JOINT

DETAIL "B"

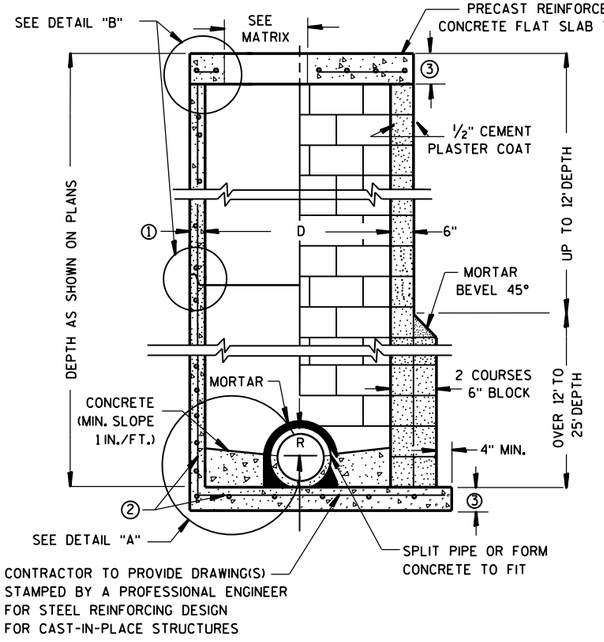

PRECAST REINFORCED CONCRETE WITH MONOLITHIC BASE

CONCRETE BLOCK WITH CAST-IN-PLACE OR PRECAST REINFORCED CONCRETE BASE ②

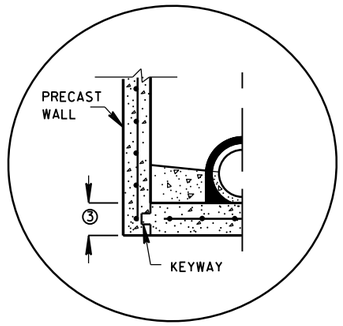

PRECAST REINFORCED CONCRETE WITH INTEGRAL BASE OPTION

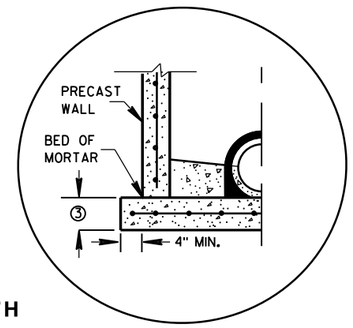

SEPARATE PRECAST REINFORCED CONCRETE BASE OPTION

DETAIL "A"

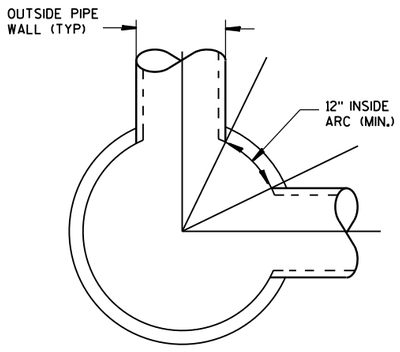

DETAIL "C"

GENERAL NOTES

DETAILS OF CONSTRUCTION, MATERIALS AND WORKMANSHIP NOT SHOWN ON THIS DRAWING SHALL CONFORM TO THE PERTINENT REQUIREMENTS OF THE STANDARD SPECIFICATIONS AND THE APPLICABLE SPECIAL PROVISIONS.

UNLESS OTHERWISE AUTHORIZED IN WRITING BY THE ENGINEER, THE CONTRACTOR SHALL NOT ORDER AND DELIVER PRECAST MANHOLE UNITS REQUIRED FOR THE PROJECT UNTIL A LIST OF SIZES IS FURNISHED BY THE ENGINEER.

DETAILED DRAWINGS FOR PROPOSED ALTERNATE DESIGNS FOR UNDERGROUND DRAINAGE STRUCTURES SHALL BE SUBMITTED TO THE ENGINEER FOR APPROVAL PROVIDING THAT SUCH ALTERNATE DESIGNS MAKE PROVISION FOR EQUIVALENT CAPACITY AND STRENGTH.

ALL DRAINAGE STRUCTURES ARE DESIGNATED ON THE PLANS AS "MANHOLES 3X3-L", "CATCH BASINS 4-B", "INLETS 2X3-H", ETC. THE FIRST NUMBERS DESIGNATE THE SIZE OF THE STRUCTURE, AND THE FOLLOWING LETTER DESIGNATES THE TYPE OF COVER TO BE USED TO COMPRISE THE COMPLETE UNIT.

BASES SHALL BE PLACED ON A BED OF MATERIAL AT LEAST 6 INCHES IN DEPTH, WHICH MEETS THE REQUIREMENTS OF GRANULAR BACKFILL. THIS BEDDING SHALL BE COMPACTED AND PROVIDE UNIFORM SUPPORT FOR THE ENTIRE AREA OF THE BASE.

PRECAST REINFORCED CONE TOPS (ECCENTRIC OR CONCENTRIC) OR PRECAST REINFORCED FLAT SLAB TOPS MAY BE USED ON CONCRETE BLOCK STRUCTURES. THE CONE TOPS SHALL BE INSTALLED ON A BED OF MORTAR.

ECCENTRIC CONE TOPS MAY BE USED ON ALL STRUCTURES, AND CONCENTRIC CONE TOPS SHALL BE USED ONLY ON STRUCTURES 5 FEET OR LESS IN DEPTH, UNLESS OTHERWISE DIRECTED BY THE ENGINEER.

STEPS MEETING AASHTO M199 AND THE FOLLOWING REQUIREMENTS SHALL BE INSTALLED IN ALL STRUCTURES OVER 5 FEET IN DEPTH: 16 INCH C-C MAXIMUM SPACING; PROJECT A MINIMUM CLEAR DISTANCE OF 4 INCHES FROM THE WALL AT THE POINT OF EMBEDMENT; MINIMUM LENGTH OF 10 INCHES; MINIMUM WALL EMBEDMENT OF 3 INCHES. FERROUS METAL STEPS NOT PAINTED OR TREATED TO RESIST CORROSION SHALL HAVE A MINIMUM CROSS SECTIONAL DIMENSION OF 1 INCH.

STEPS OF APPROVED POLYPROPYLENE PLASTIC COATED REINFORCEMENT BAR ARE ACCEPTABLE. REINFORCING BAR MUST BE A MINIMUM OF ½" AND MEET THE REQUIREMENTS OF ASTM A615.

CERTIFICATION SHALL BE PROVIDED THAT INSTALLED STEPS WHEN TESTED IN ACCORDANCE WITH SECTION 10 OF AASHTO T280 CAN WITHSTAND A VERTICAL LOAD OF 800 LBS. AND A HORIZONTAL LOAD OF 400 LBS.

ALL BAR STEEL REINFORCEMENT SHALL BE EMBEDDED 2 INCHES CLEAR UNLESS OTHERWISE SHOWN OR NOTED.

CONCRETE BLOCK WILL NOT BE PERMITED FOR STRUCTURES GREATER THAN 4 FEET IN DIAMETER.

PRECAST REINFORCED RISERS SHALL HAVE A TONGUE AND GROOVE JOINT WITH TONGUE UP OR DOWN.

ALL PRECAST MANHOLE UNITS SHALL CONFORM TO THE PERTINENT REQUIREMENTS OF AASHTO DESIGNATION M 199.

4" OVERHANGING BASES ARE REQUIRED FOR ALL CONCRETE BLOCK INSTALLATIONS. 4" OVERHANG IS REQUIRED WHEN SEPARATE PRECAST BASE IS PROVIDED. OVERHANG IS NOT REQUIRED ON PRECAST STRUCTURES WITH AN INTEGRAL OR MONOLITHIC BASE.

FOR ADDITIONAL CONFIGURATIONS, MAINTAIN A MINIMUM OF 12 INCHES AS MEASURED FROM THE INSIDE OF THE STRUCTURE WALL BETWEEN THE OUTSIDE PIPE WALLS OF ADJACENT PIPES. SEE DETAIL "C".

① MINIMUM WALL THICKNESS SHALL BE 4 INCHES FOR 3-FT, 5 INCHES FOR 4-FT, 6 INCHES FOR 5-FT, 7 INCHES FOR 6-FT, 8 INCHES FOR 7-FT AND 9 INCHES FOR 8-FT DIAMETER PRECAST MANHOLES.

② FOR PRECAST MANHOLES PROVIDE REINFORCING STEEL IN ACCORDANCE TO AASHTO M199.

③ PRECAST FLAT SLAB TOPS AND BASES WITH A DIAMETER OF 48" AND LESS SHALL HAVE A MINIMUM THICKNESS OF 6". PRECAST FLAT SLAB TOPS AND BASES WITH A DIAMETER LARGER THAN 48" SHALL HAVE A MINIMUM THICKNESS OF 8".

MANHOLE COVER OPENING MATRIX

MANHOLE COVER TYPE	C	ALL J'S	K	L	M
OPENING SIZE (FT)					
2 DIA.	X	X		X	
3 DIA.			X		X

PIPE MATRIX

MANHOLE SIZE	MAXIMUM INSIDE PIPE DIAMETER FOR TWO PIPES	
	180° SEPARATION (IN)	90° SEPARATION (IN)
3-FT	15	12
4-FT	24	18
5-FT	36	24
6-FT	42	36
7-FT	48	36
8-FT	60	42

MANHOLES 3-FT, 4-FT, 5-FT, 6-FT, 7-FT AND 8-FT DIAMETER

STATE OF WISCONSIN
DEPARTMENT OF TRANSPORTATION

APPROVED
6/5/2012 — DATE
/S/ Jerry H. Zogg — ROADWAY STANDARDS DEVELOPMENT ENGINEER
FHWA

6
S.D.D. 8 B 9-1

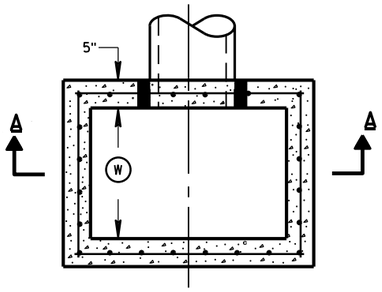

PLAN VIEW

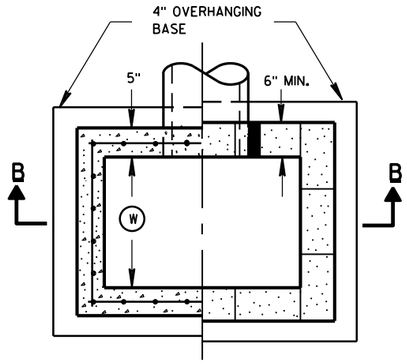

PLAN VIEW

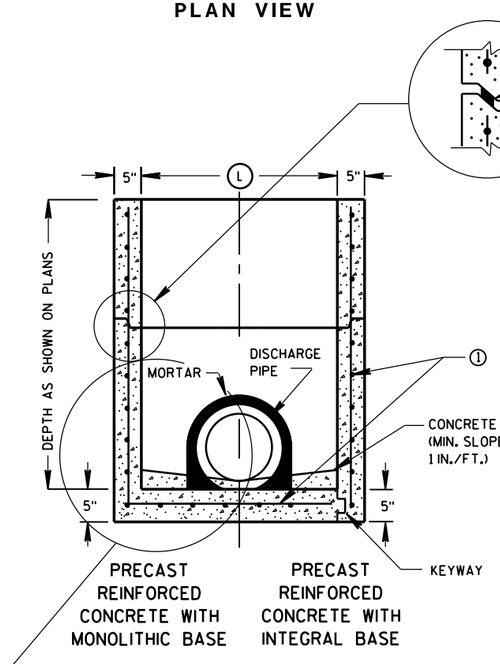

SECTION A-A

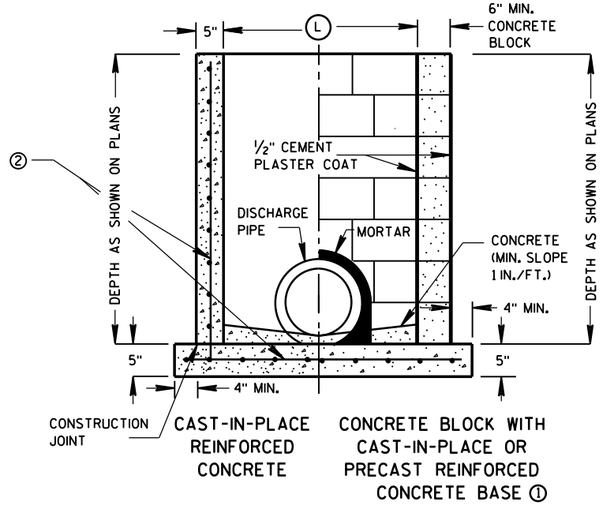

SECTION B-B

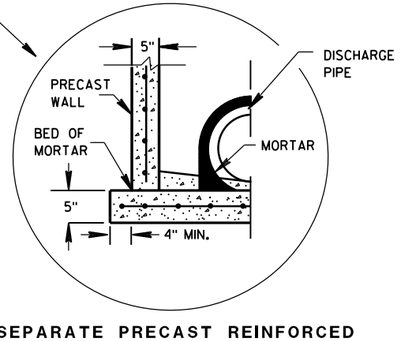

SEPARATE PRECAST REINFORCED CONCRETE BASE OPTION

GENERAL NOTES

DETAILS OF CONSTRUCTION, MATERIALS AND WORKMANSHIP NOT SHOWN ON THIS DRAWING SHALL CONFORM TO THE PERTINENT REQUIREMENTS OF THE STANDARD SPECIFICATIONS AND THE APPLICABLE SPECIAL PROVISIONS.

UNLESS OTHERWISE AUTHORIZED IN WRITING BY THE ENGINEER, THE CONTRACTOR SHALL NOT ORDER AND DELIVER PRECAST INLET UNITS REQUIRED FOR THE PROJECT UNTIL A LIST OF SIZES IS FURNISHED BY THE ENGINEER.

DETAILED DRAWINGS FOR PROPOSED ALTERNATE DESIGNS FOR UNDERGROUND DRAINAGE STRUCTURES SHALL BE SUBMITTED TO THE ENGINEER FOR APPROVAL PROVIDING THAT SUCH ALTERNATE DESIGNS MAKE PROVISION FOR EQUIVALENT CAPACITY AND STRENGTH.

ALL PRECAST INLET UNITS SHALL CONFORM TO THE PERTINENT REQUIREMENTS OF ASTM C 913.

ALL DRAINAGE STRUCTURES ARE DESIGNATED ON THE PLANS AS "MANHOLES 3X3-L", "CATCH BASINS 4-B", "INLETS 2X3-H", ETC. THE FIRST NUMBERS DESIGNATES THE SIZE OF THE STRUCTURE, AND THE FOLLOWING LETTER DESIGNATES THE TYPE OF COVER TO BE USED TO COMPRISE THE COMPLETE UNIT.

BASES SHALL BE PLACED ON A BED OF MATERIAL AT LEAST 6 INCHES IN DEPTH, WHICH MEETS THE REQUIREMENTS OF GRANULAR BACKFILL. THIS BEDDING SHALL BE COMPACTED AND PROVIDE UNIFORM SUPPORT FOR THE ENTIRE AREA OF THE BASE.

ALL BAR STEEL REINFORCEMENT SHALL BE EMBEDDED 2 INCHES CLEAR UNLESS OTHERWISE SHOWN OR NOTED.

PRECAST REINFORCED RISERS SHALL HAVE A TONGUE AND GROOVE JOINT WITH TONGUE UP OR DOWN.

4" OVERHANGING BASES ARE REQUIRED FOR CAST-IN-PLACE REINFORCED CONCRETE AND CONCRETE BLOCK INSTALLATIONS.
4" OVERHANG IS REQUIRED WHEN SEPARATE PRECAST BASE IS PROVIDED.
OVERHANG IS NOT REQUIRED ON PRECAST STRUCTURES WITH AN INTEGRAL OR MONOLITHIC BASE.

MAXIMUM INSIDE PIPE DIAMETER DETERMINED BY 3 INCH CLEARANCE ON EACH SIDE OF THE OUTSIDE WALL OF THE PIPE. SEE DETAIL "A". ASSUMES PIPE ENTERS PERPENDICULAR TO THE STRUCTURE.

① FOR PRECAST INLETS PROVIDE REINFORCING STEEL IN ACCORDANCE TO ASTM C 913.

② CONTRACTOR TO PROVIDE DRAWING(S) STAMPED BY A PROFESSIONAL ENGINEER FOR STEEL REINFORCING DESIGN FOR CAST-IN-PLACE STRUCTURES.

INLET COVER MATRIX

INLET SIZE		INLET COVER TYPE	ALL A'S	ALL B'S	BW	F	ALL H'S	S	T	V	WM
	WIDTH (W) (FT)	LENGTH (L) (FT)									
2X2-FT	2	2	X	X				X		X	
2X2.5-FT	2	2.5			X			X	X	X	X
2X3-FT	2	3					X				
2.5X3-FT	2.5	3				X					

PIPE MATRIX

INLET SIZE	MAXIMUM INSIDE PIPE DIAMETER	
	WIDTH (IN)	LENGTH (IN)
2X2-FT	12	12
2X2.5-FT	12	18
2X3-FT	12	24
2.5X3-FT	18	24

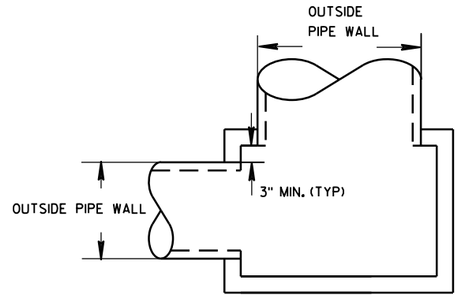

DETAIL "A"

INLETS 2X2-FT, 2X2.5-FT, 2X3-FT AND 2.5X3-FT

STATE OF WISCONSIN
DEPARTMENT OF TRANSPORTATION

APPROVED
6/5/2012
DATE
FHWA

/S/ Jerry H. Zogg
ROADWAY STANDARDS DE
ENGINEER

6
S.D.D. 8 C 7-1

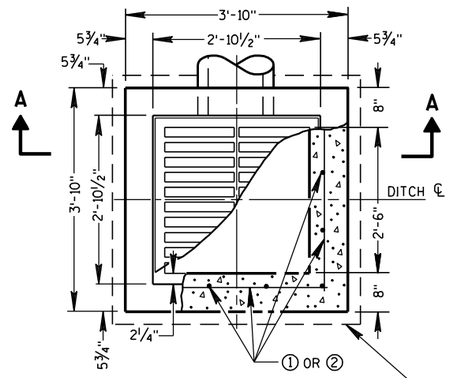

PLAN VIEW

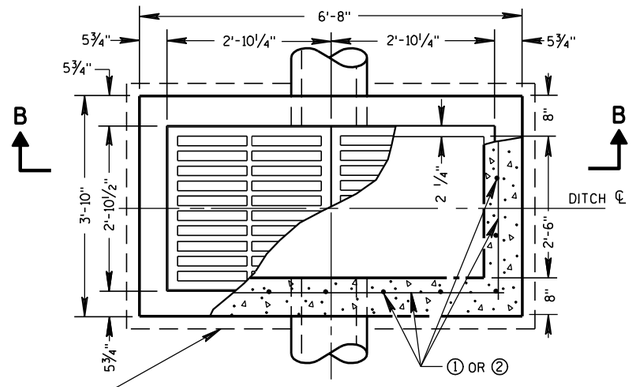

PLAN VIEW

4" OVERHANGING BASE ON REINFORCED CAST-IN-PLACE CONCRETE INLETS

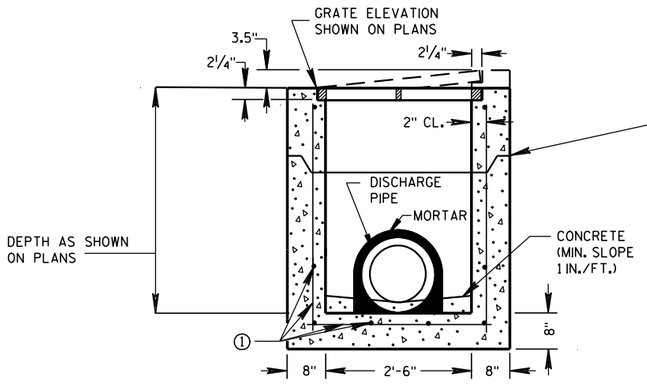

PRECAST REINFORCED CONCRETE SECTION A-A

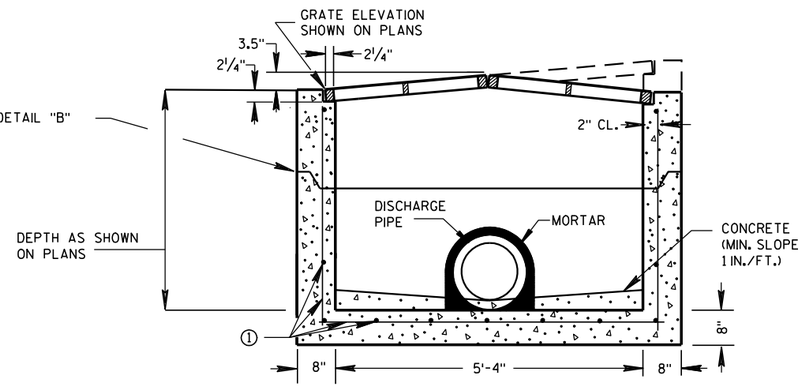

PRECAST REINFORCED CONCRETE SECTION B-B

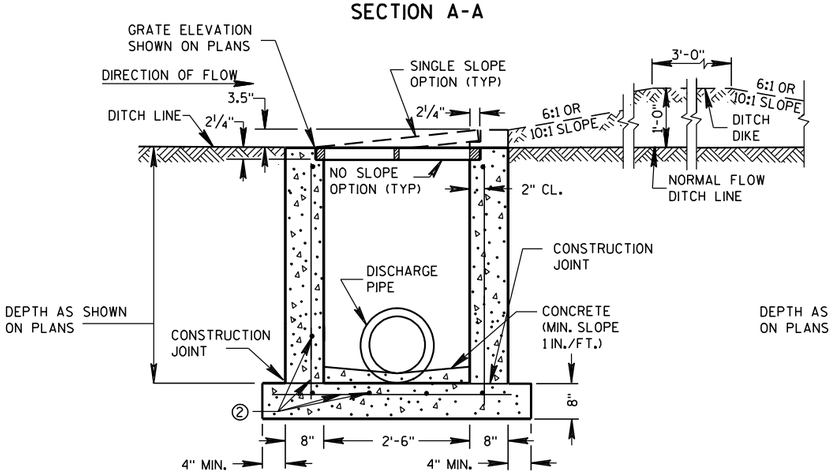

REINFORCED CAST-IN-PLACE CONCRETE SECTION A-A

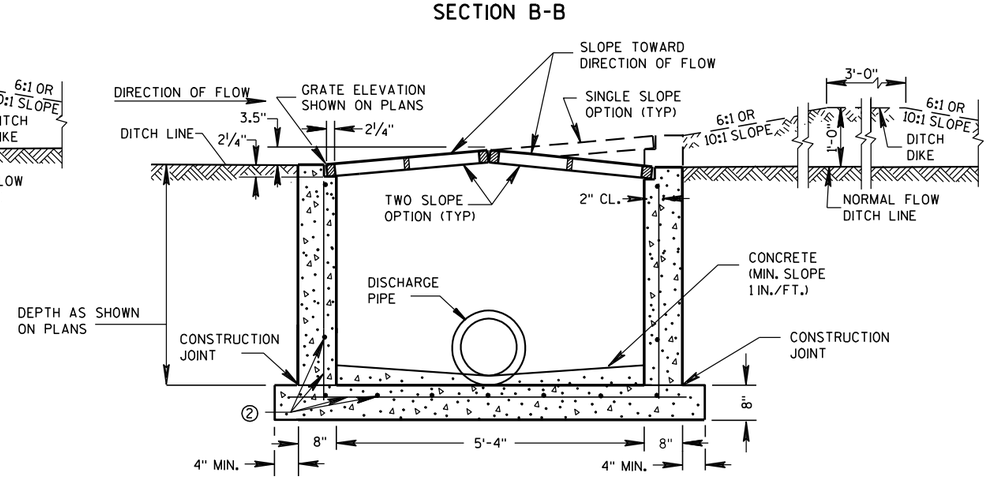

REINFORCED CAST-IN-PLACE CONCRETE SECTION B-B

INLETS MEDIAN 1 GRATE

INLETS MEDIAN 2 GRATE

GENERAL NOTES

DETAILS OF CONSTRUCTION, MATERIALS AND WORKMANSHIP NOT SHOWN ON THIS DRAWING SHALL CONFORM TO THE PERTINENT REQUIREMENTS OF THE STANDARD SPECIFICATIONS AND THE APPLICABLE SPECIAL PROVISIONS.

UNLESS OTHERWISE AUTHORIZED IN WRITING BY THE ENGINEER, THE CONTRACTOR SHALL NOT ORDER AND DELIVER PRECAST INLET UNITS REQUIRED FOR THE PROJECT UNTIL A LIST OF SIZES IS FURNISHED BY THE ENGINEER.

DETAILED DRAWINGS FOR PROPOSED ALTERNATE DESIGNS FOR INLETS WHICH MAY INCLUDE PRECAST REINFORCED CONCRETE INLETS, SHALL BE SUBMITTED TO THE ENGINEER FOR APPROVAL PROVIDING THAT SUCH ALTERNATE DESIGNS MAKE PROVISION FOR EQUIVALENT CAPACITY AND STRENGTH.

ALL MEDIAN INLETS ARE DESIGNATED ON THE PLANS AS "INLETS, 1G-MS", ETC. THE FIRST NUMBER AND LETTER DESIGNATE THE TYPE OF STRUCTURE, AND THE FOLLOWING LETTERS DESIGNATE THE TYPE OF COVER TO BE USED TO COMPRISE THE COMPLETE UNIT.

ALL BAR STEEL REINFORCEMENT SHALL BE EMBEDDED 2 INCHES CLEAR UNLESS OTHERWISE SHOWN OR NOTED.

PRECAST REINFORCED RISERS SHALL HAVE A TONGUE AND GROOVE JOINT WITH TONGUE UP OR DOWN.

ALL PRECAST INLET UNITS SHALL CONFORM TO THE PERTINENT REQUIREMENTS OF ASTM C 913.

MAXIMUM INSIDE PIPE DIAMETER DETERMINED BY 3" CLEARANCE ON EACH SIDE OF THE OUTSIDE WALL OF THE PIPE. SEE DETAIL "A". ASSUMES PIPE ENTERS PERPENDICULAR TO THE STRUCTURE.

① FOR PRECAST INLETS PROVIDE REINFORCING STEEL IN ACCORDANCE TO ASTM C 913.

② CONTRACTOR TO PROVIDE DRAWING(S) STAMPED BY A PROFESSIONAL ENGINEER FOR STEEL REINFORCING DESIGN FOR CAST-IN-PLACE STRUCTURES.

PIPE MATRIX

	MAXIMUM INSIDE PIPE DIAMETER	
INLET SIZE	WIDTH (IN)	LENGTH (IN)
1 GRATE	18	18
2 GRATE	18	42

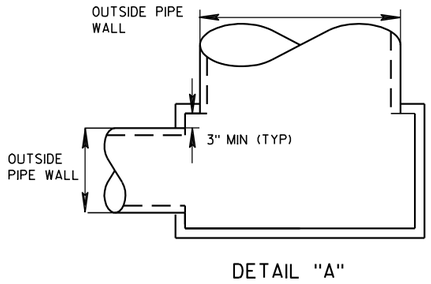

DETAIL "A"

JOINTS TO BE SEALED WITH A BUTYL RUBBER SEAL PER SEALANT MANUFACTURERS RECOMMENDATIONS CONFORMING TO ASTM C 990 (TYP)

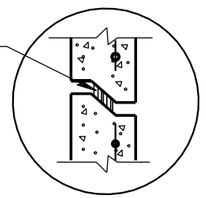

DETAIL "B"

INLETS MEDIAN 1 AND 2 GRATE

STATE OF WISCONSIN
DEPARTMENT OF TRANSPORTATION

APPROVED

6/5/2012
DATE

/S/ Jerry H. Zogg
ROADWAY STANDARDS DEVELOPMENT
ENGINEER

FHWA

6

S.D.D. 8 C 8-1

6

S.D.D. 8 C 8-1

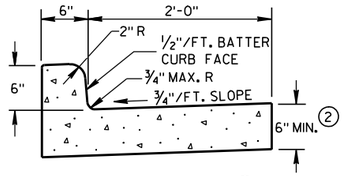

TYPES A & D (1)

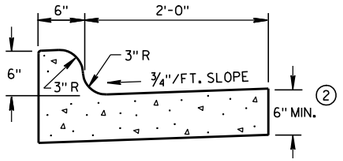

TYPES K & L (1)

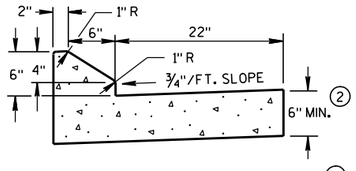

6" SLOPED CURB TYPES G & J (1)

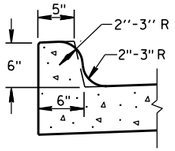

OPTIONAL CURB SHAPE FOR TYPES K & L (1)

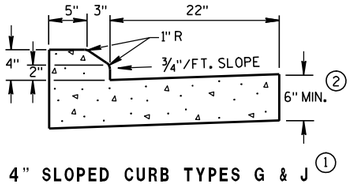

4" SLOPED CURB TYPES G & J (1)

CONCRETE CURB & GUTTER 30"

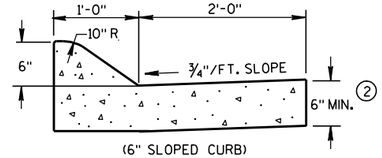

(6" SLOPED CURB)

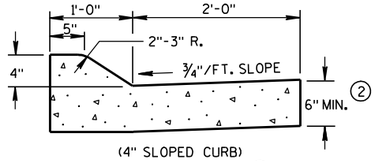

(4" SLOPED CURB)

TYPES A & D (1)

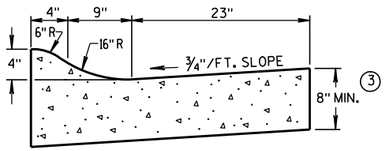

4" SLOPED CURB TYPES R & T (1) (4)

CONCRETE CURB & GUTTER 36"

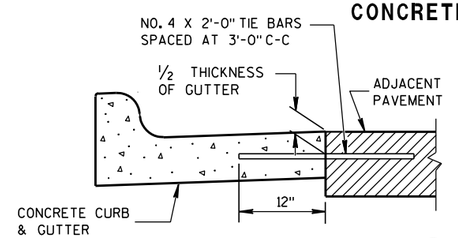

TYPICAL TIE BAR LOCATION (1)

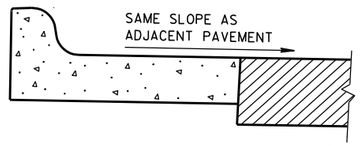

REVERSE SLOPE GUTTER (5)
(TYPICAL FOR ALL CURB & GUTTER TYPES)

GENERAL NOTES

DETAILS OF CONSTRUCTION, MATERIALS AND WORKMANSHIP NOT SHOWN ON THIS DRAWING SHALL CONFORM TO THE PERTINENT REQUIREMENTS OF THE CONTRACT.

PAVEMENT TIES AND TIE BARS SHALL BE EPOXY COATED IN CONFORMANCE WITH SUBSECTION 505.2.6.2 OF THE STANDARD SPECIFICATIONS.

INTEGRAL CURB & GUTTER SHALL CONFORM TO THE DETAILS SHOWN FOR CONCRETE CURB & GUTTER INCLUDING THE TRANSVERSE GUTTER SLOPE. A LONGITUDINAL CONSTRUCTION JOINT IS NOT REQUIRED WITH INTEGRAL CURB AND GUTTER.

WHERE THE TRANSVERSE JOINTS IN THE PAVEMENT ARE REQUIRED TO BE SEALED, THE JOINTS IN THE INTEGRAL CURB AND GUTTER SHALL BE SEALED TO THE FACE OF CURB WITH THE SAME TYPE OF SEALANT. THE COST OF FURNISHING AND INSTALLING THIS SEALANT SHALL BE INCIDENTAL TO THE ITEM CONCRETE CURB AND GUTTER.

UNLESS OTHERWISE SHOWN ON THE TYPICAL CROSS SECTIONS, THE BASE AGGREGATE AND COMMON EXCAVATION LIMITS ARE 2'-0" BEHIND THE BACK OF CURBS.

(1) TIE BARS ARE REQUIRED FOR CURB AND GUTTER TYPES A, G, K AND R.

(2) THE BOTTOM OF CURB AND GUTTER MAY BE CONSTRUCTED EITHER LEVEL OR PARALLEL TO THE SLOPE OF THE SUBGRADE OR BASE AGGREGATE PROVIDED A 6" MINIMUM GUTTER THICKNESS IS MAINTAINED.

(3) THE BOTTOM OF CURB AND GUTTER MAY BE CONSTRUCTED EITHER LEVEL OR PARALLEL TO THE SLOPE OF THE SUBGRADE OR BASE AGGREGATE PROVIDED A 8" MINIMUM GUTTER THICKNESS IS MAINTAINED.

(4) THE FACE OF CURB IS 6" FROM THE BACK OF CURB.

(5) WHEN REVERSE SLOPE GUTTER IS REQUIRED, THE LOCATION(S) WILL BE SHOWN ELSEWHERE IN THE PLAN.

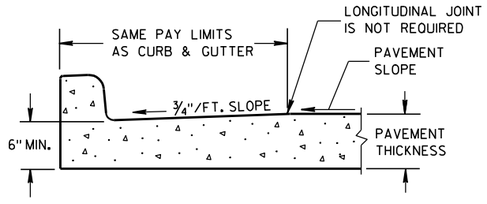

PARTIAL SECTION OF PAVEMENT WITH INTEGRAL CURB & GUTTER

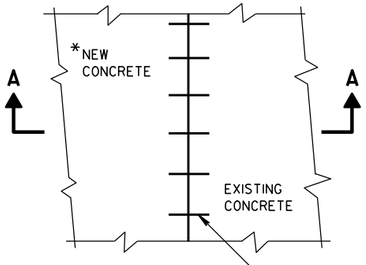

PLAN VIEW

*NEW CURB & GUTTER, SURFACE DRAINS, CONCRETE PAVEMENT OR OTHER NEW CONCRETE.

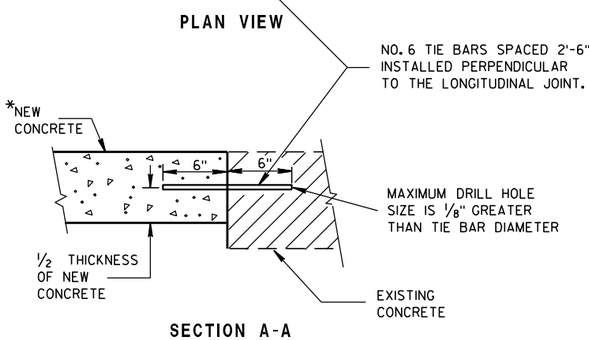

SECTION A-A

TIE BARS DRILLED INTO EXISTING PAVEMENT

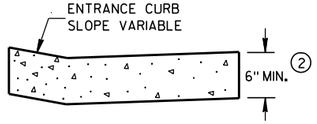

DRIVEWAY ENTRANCE CURB
(WHEN DIRECTED BY THE ENGINEER)

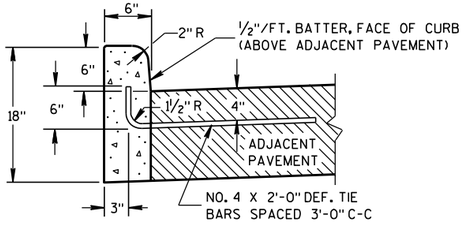

(1) TYPES A & D

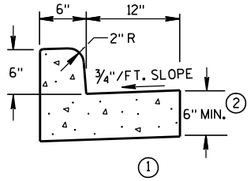

(1) TYPES A & D

CONCRETE CURB & GUTTER 18"

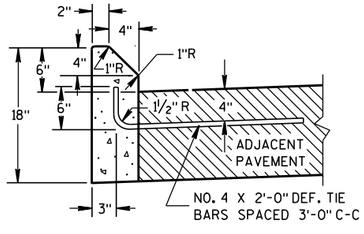

(1) TYPES G & J

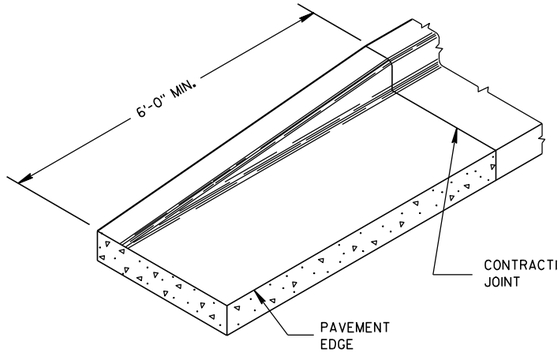

END SECTION CURB & GUTTER

CONCRETE CURB

CONCRETE CURB, CONCRETE CURB & GUTTER AND TIES	
STATE OF WISCONSIN DEPARTMENT OF TRANSPORTATION	
APPROVED	
9/4/08 DATE	/S/ Jerry H. [illegible] ROADWAY STANDARDS ENGINEER
FHWA	100 ENT

6

S.D.D. 8 D 1-17

6

S.D.D. 8 D 1-17

ASPHALTIC FLUME

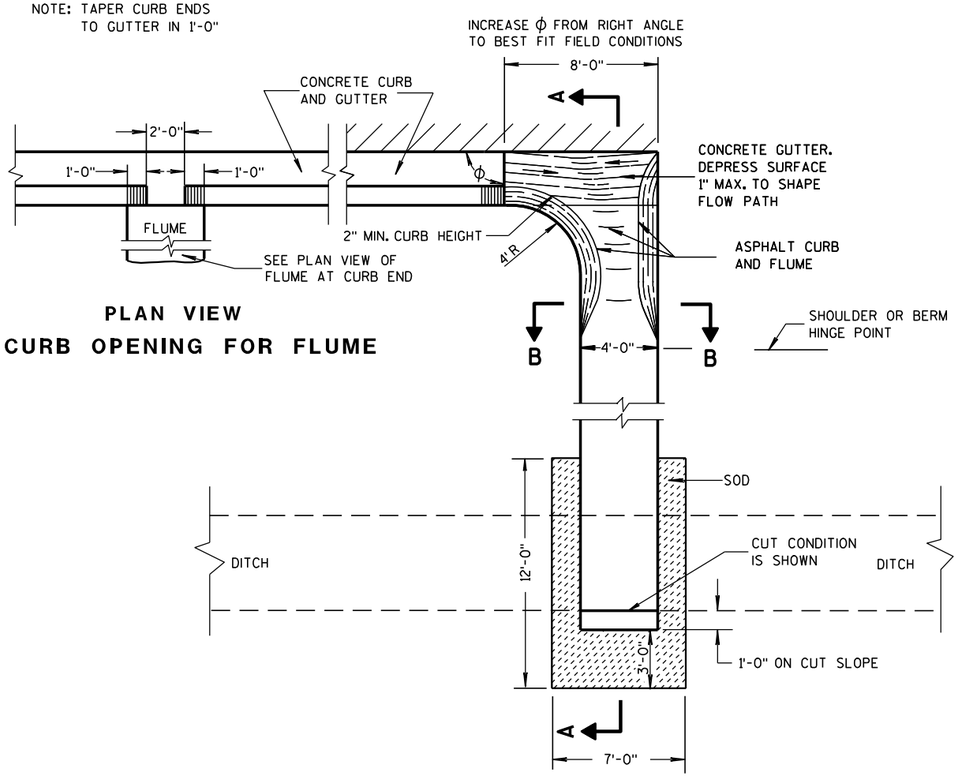

PLAN VIEW
CURB OPENING FOR FLUME

PLAN VIEW
FLUME AT CURB END

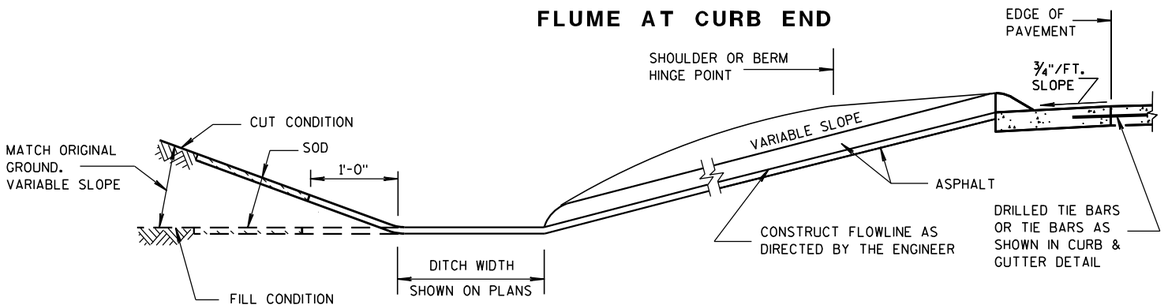

SECTION A-A

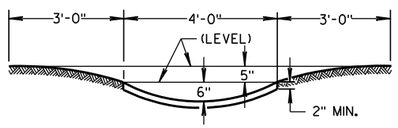

SECTION B-B

GENERAL NOTES

DETAILS OF CONSTRUCTION, MATERIALS AND WORKMANSHIP NOT SHOWN ON THIS DRAWING SHALL CONFORM TO PERTINENT REQUIREMENTS OF THE STANDARD SPECIFICATIONS AND APPLICABLE SPECIAL PROVISIONS.

WELDED STEEL WIRE FABRIC SHALL BE IN ACCORDANCE WITH AASHTO SPECIFICATION M55.

① JOINTS SHALL BE $\frac{1}{8}$ TO $\frac{1}{4}$ INCH WIDE BY $1\frac{1}{2}$ INCHES DEEP AND SPACED AT UNIFORM INTERVALS OF APPROXIMATELY 4 FEET.

② GEOTEXTILE FABRIC TYPE "R" SHALL UNDERLAY THE FULL LENGTH AND WIDTH OF THE CONCRETE SURFACE DRAIN AND RIPRAP.

③ CONCRETE SURFACE DRAIN WITHOUT CURB AND GUTTER MAY BE USED ON BACKSLOPES WHEN SPECIFIED

③ CONCRETE SURFACE DRAIN

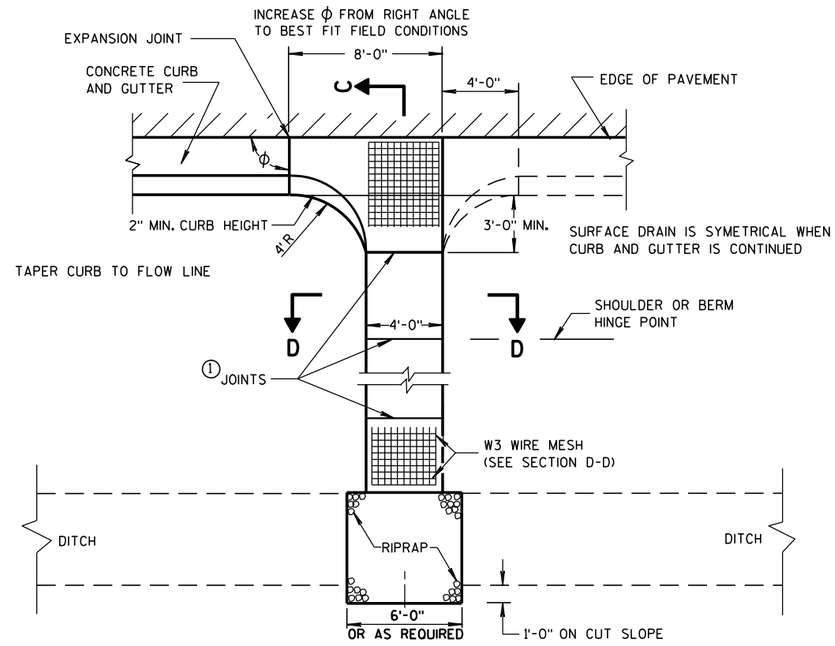

PLAN VIEW

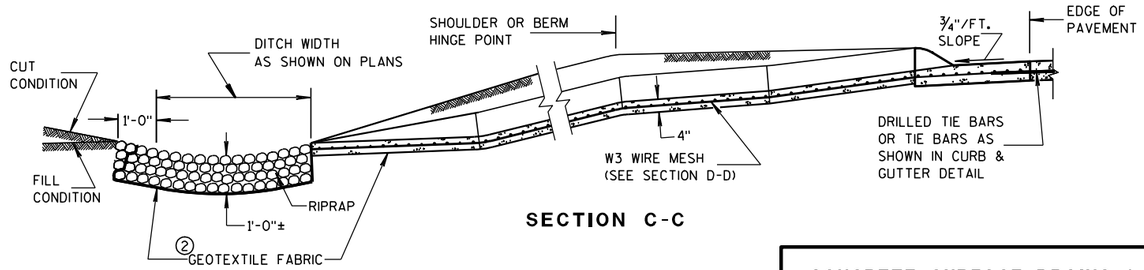

SECTION C-C

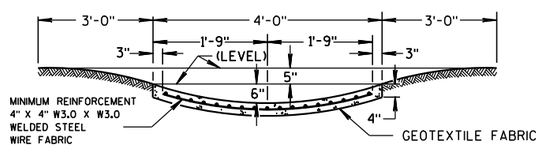

SECTION D-D

CONCRETE SURFACE DRAINS & ASPHALTIC FLUMES

STATE OF WISCONSIN
DEPARTMENT OF TRANSPORTATION

APPROVED
9-4-08 DATE
/S/ Jerry H. Zogg
ROADWAY STANDARDS ENGINEER
MENT

FHWA

6

S.D.D. 8 D 4-5

6

S.D.D. 8 D 4-5

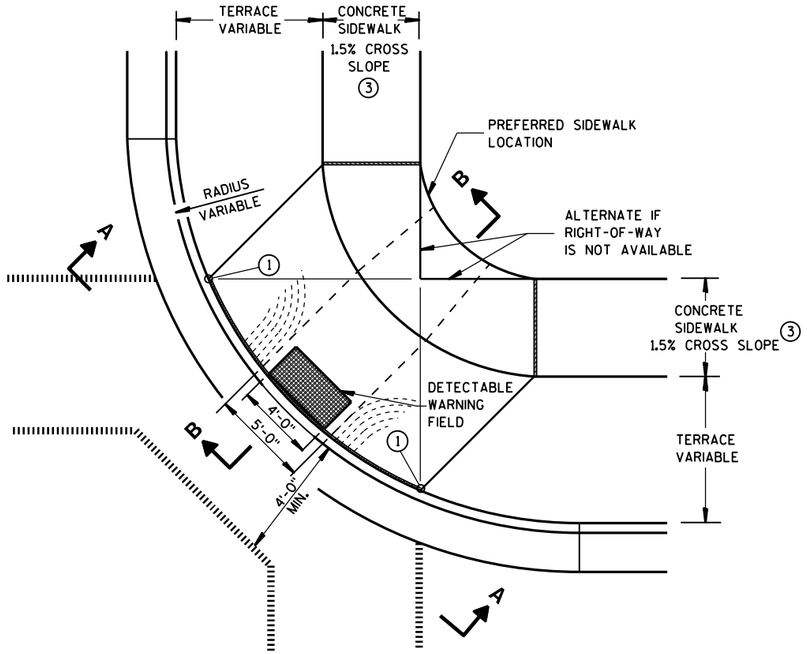

PLAN VIEW

TYPE 1 RAMP

(CENTER OF CORNER RADIUS)

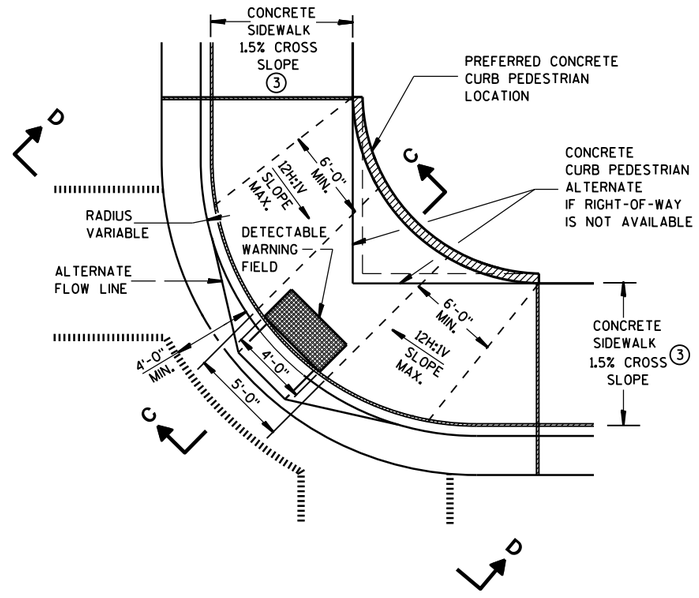

PLAN VIEW

TYPE 1-A RAMP

(NO TERRACE)

GENERAL NOTES

DETAILS OF CONSTRUCTION, MATERIALS AND WORKMANSHIP NOT SHOWN ON THIS DRAWING SHALL CONFORM TO THE PERTINENT REQUIREMENTS OF THE STANDARD SPECIFICATIONS AND THE APPLICABLE SPECIAL PROVISIONS.

RAMPS SHALL BE BUILT AT 12H:1V OR FLATTER. WHEN NECESSARY, THE SIDEWALK ELEVATION MAY BE LOWERED TO MEET THE HIGH POINT ON THE RAMP.

TYPE 1 RAMPS SHALL HAVE A NORMAL SIDEWALK APRON AND CURB ON BOTH SIDES OF RAMP.

DETECTABLE WARNING FIELD SHALL BE MEASURED AND PAID BY THE SQUARE FOOT AS "CURB RAMP DETECTABLE WARNING FIELD". THE CONCRETE PEDESTRIAN CURB, IF NEEDED, SHALL BE MEASURED AND PAID BY THE LINEAL FOOT AS "CONCRETE CURB PEDESTRIAN". CONCRETE SIDEWALK IN THE CURB RAMP AREA SHALL BE MEASURED AND PAID BY THE SQUARE FOOT AS CONCRETE SIDEWALK, INCLUDING THE AREA UNDER THE DETECTABLE WARNING FIELD.

SELECT CURB RAMP DETECTABLE WARNING FIELD MATERIALS AND DEVICES FROM THE DEPARTMENT'S APPROVED MATERIALS LIST. THE COLOR OF THE DETECTABLE WARNING FIELD IS SPECIFIED ELSEWHERE AND IS INCIDENTAL TO THE BID ITEM OF "CURB RAMP DETECTABLE WARNING FIELD".

DETECTABLE WARNING FIELDS THAT ARE INSTALLED AS A GROUP OR SIDE BY SIDE, SHALL BE FROM THE SAME MANUFACTURER.

SURFACE TEXTURE OF THE RAMP SHALL BE OBTAINED BY COARSE BROOMING TRANSVERSE TO THE SLOPE OF THE RAMP.

① THIS POINT IS AN EXTENSION OF OUTSIDE EDGE OF APPROACHING SIDEWALK WHERE IT MEETS THE BACK OF CONCRETE CURB.

② GRADE CHANGE BETWEEN GUTTER FLAG SLOPE AND THE CURB RAMP SLOPE SHALL NOT EXCEED 11%. PROVIDE DRAINAGE AWAY FROM CURB RAMP AT GUTTER FLAG INTERFACE.

③ ±0.5% CONSTRUCTION TOLERANCE IN SIDEWALK CROSS SLOPE. THE SIDEWALK CROSS SLOPE SHALL NOT EXCEED 2% WITHOUT PRIOR APPROVAL FROM THE ENGINEER.

LEGEND

- ½" EXPANSION JOINT-SIDEWALK
- CONTRACTION JOINT FIELD LOCATED
- PAVEMENT MARKING CROSSWALK (WHITE)
- ALTERNATIVE LAYOUT

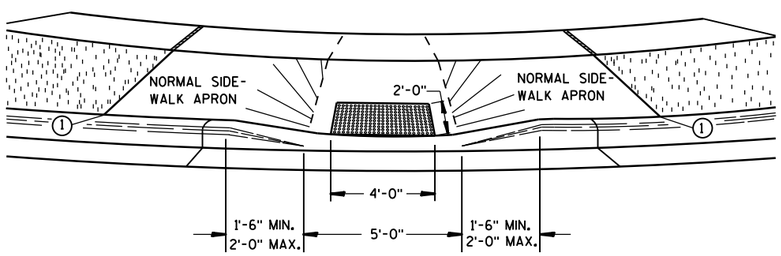

VIEW A-A

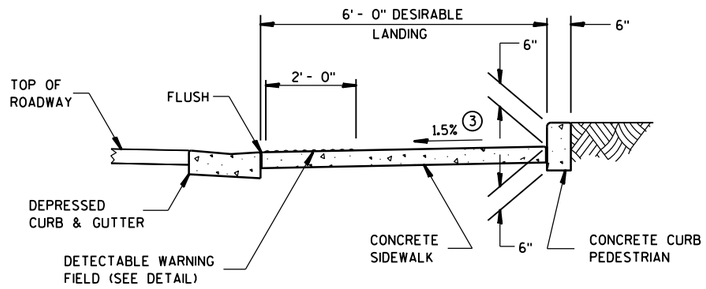

SECTION C-C

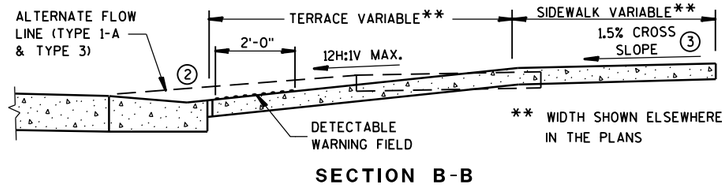

SECTION B-B

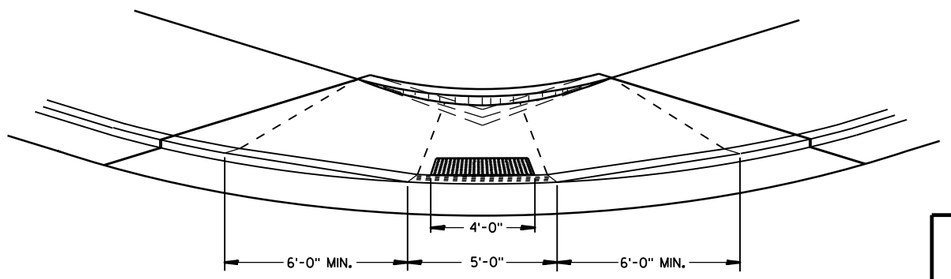

VIEW D-D

CURB RAMPS TYPES 1 AND 1-A

STATE OF WISCONSIN
DEPARTMENT OF TRANSPOR

6

S.D.D. 8 D 5-15a

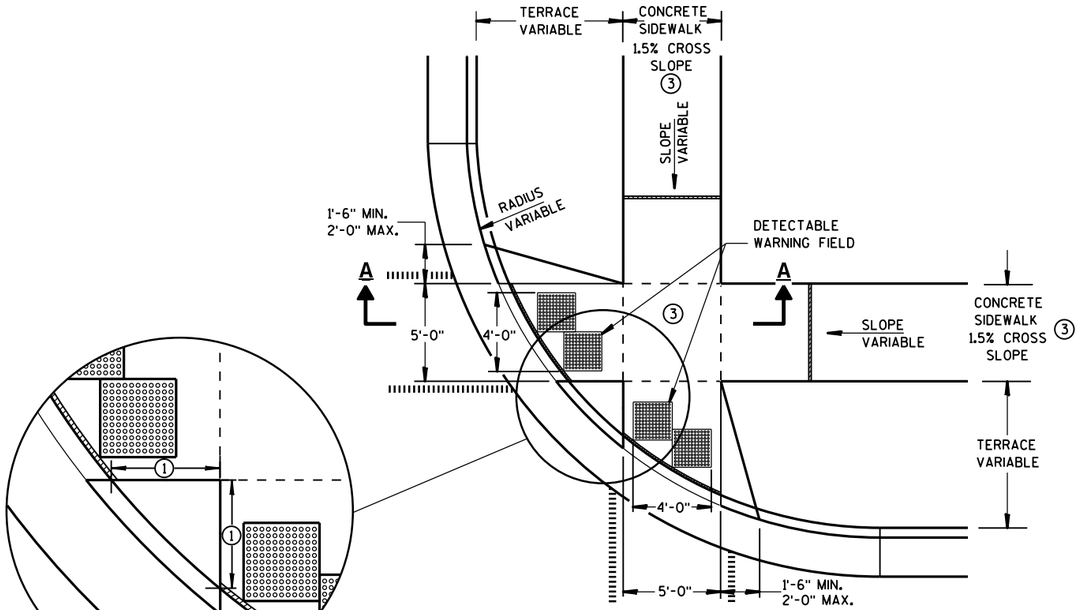

PLAN VIEW
TYPE 2 RAMP
(ON LINE WITH SIDEWALK)

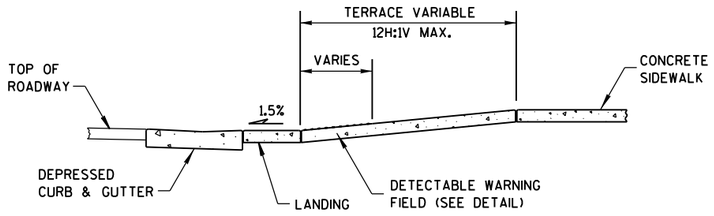

SECTION A-A

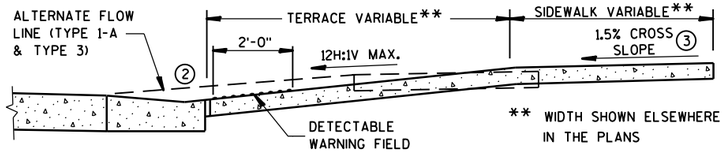

SECTION B-B

GENERAL NOTES

USE THE TYPE 3 RAMP ONLY WHEN A TYPE 1 OR TYPE 2 CANNOT BE ACHIEVED BECAUSE OF FIELD CONDITIONS.

DETECTABLE WARNING FIELDS THAT ARE INSTALLED AS A GROUP OR SIDE BY SIDE, SHALL BE FROM THE SAME MANUFACTURER.

① WHEN THIS DISTANCE IS LESS THAN 6'-0" IT MAY BE DIFFICULT TO ACHIEVE A 12H:1V SLOPE, OR FLATTER, ON THE RAMP. REDUCE CURB HEIGHT IN TRIANGLE AREA TO ACHIEVE 12H:1V SLOPE, OR FLATTER, ON RAMP. 2" MINIMUM CURB HEIGHT.

② GRADE CHANGE BETWEEN GUTTER FLAG SLOPE AND THE CURB RAMP SLOPE SHALL NOT EXCEED 11%. PROVIDE DRAINAGE AWAY FROM CURB RAMP AT GUTTER FLAG INTERFACE.

③ ±0.5% CONSTRUCTION TOLERANCE IN SIDEWALK CROSS SLOPE. THE SIDEWALK CROSS SLOPE SHALL NOT EXCEED 2% WITHOUT PRIOR APPROVAL FROM THE ENGINEER.

LEGEND

- ½" EXPANSION JOINT-SIDEWALK
- CONTRACTION JOINT FIELD LOCATED
- PAVEMENT MARKING CROSSWALK (WHITE)
- ALTERNATIVE LAYOUT

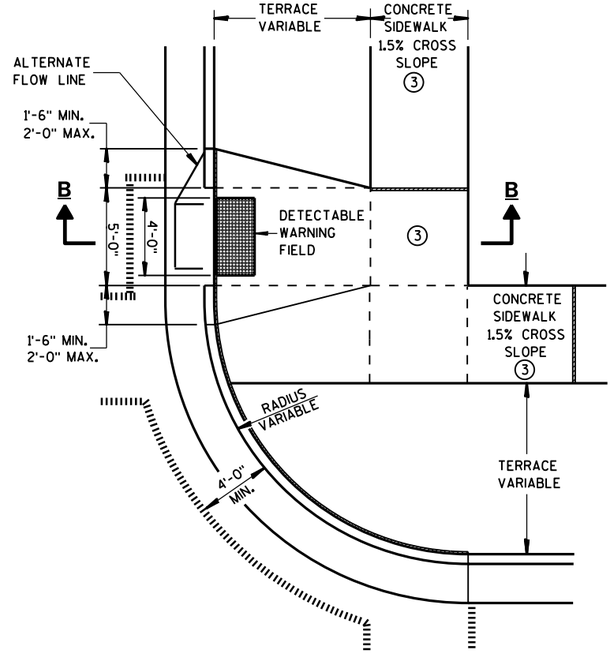

PLAN VIEW
TYPE 3 RAMP
(OUTSIDE OF CROSSWALK AREA)

CURB RAMPS TYPES 2 AND 3

STATE OF WISCONSIN
DEPARTMENT OF TRANSPOI

6

S.D.D. 8 D 5-15b

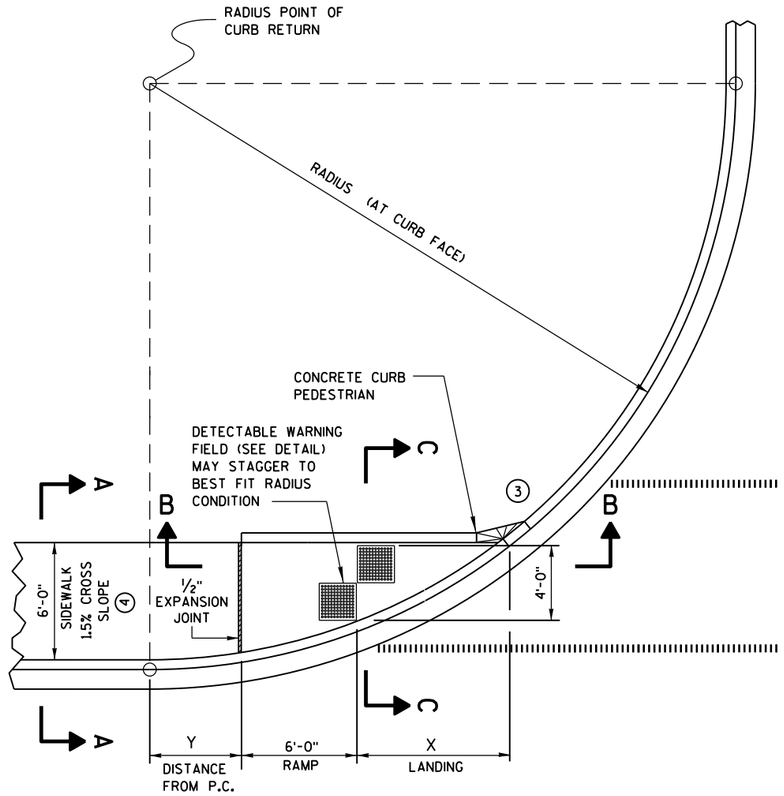

CURB RAMP TYPE 4A
PLAN VIEW

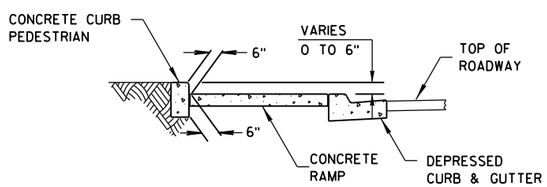

SECTION C-C FOR TYPE 4A

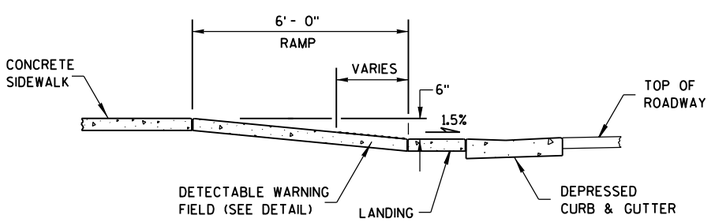

SECTION B-B FOR TYPE 4A

RADIUS (AT CURB FACE)	X	Y
20 FEET	6'-1¾"	2'-7¼"
30 FEET	7'-11¾"	4'-8¼"
40 FEET	9'-5¼"	6'-5"
50 FEET	10'-8¾"	7'-11¼"
60 FEET	11'-10¼"	9'-3½"

INTERMEDIATE RADII CAN BE INTERPOLATED

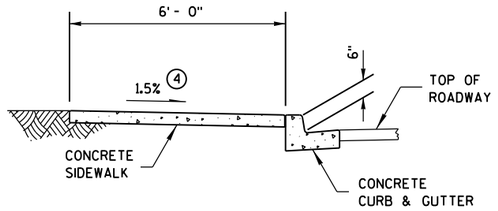

SECTION A-A FOR TYPE 4A

GENERAL NOTES

AVOID PLACING DRAINAGE STRUCTURES, JUNCTION BOXES OR OTHER OBSTRUCTIONS IN FRONT OF RAMP ACCESS AREAS.

RAMP SLOPES SHALL NOT BE STEEPER THAN 12:1.

DETECTABLE WARNING FIELDS THAT ARE INSTALLED AS A GROUP OR SIDE BY SIDE, SHALL BE FROM THE SAME MANUFACTURER.

(3) INSTALL TRANSITION NOSE. (INCIDENTAL TO OTHER PAY ITEMS.) DO NOT MARK TRANSITION NOSE.

(4) ±0.5% CONSTRUCTION TOLERANCE IN SIDEWALK CROSS SLOPE. THE SIDEWALK CROSS SLOPE SHALL NOT EXCEED 2% WITHOUT PRIOR APPROVAL FROM THE ENGINEER.

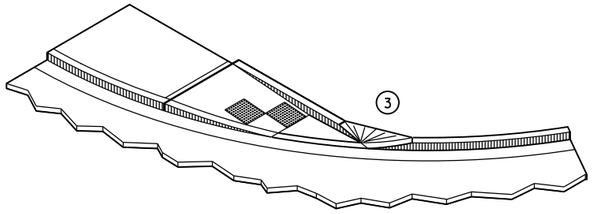

ISOMETRIC VIEW FOR TYPE 4A

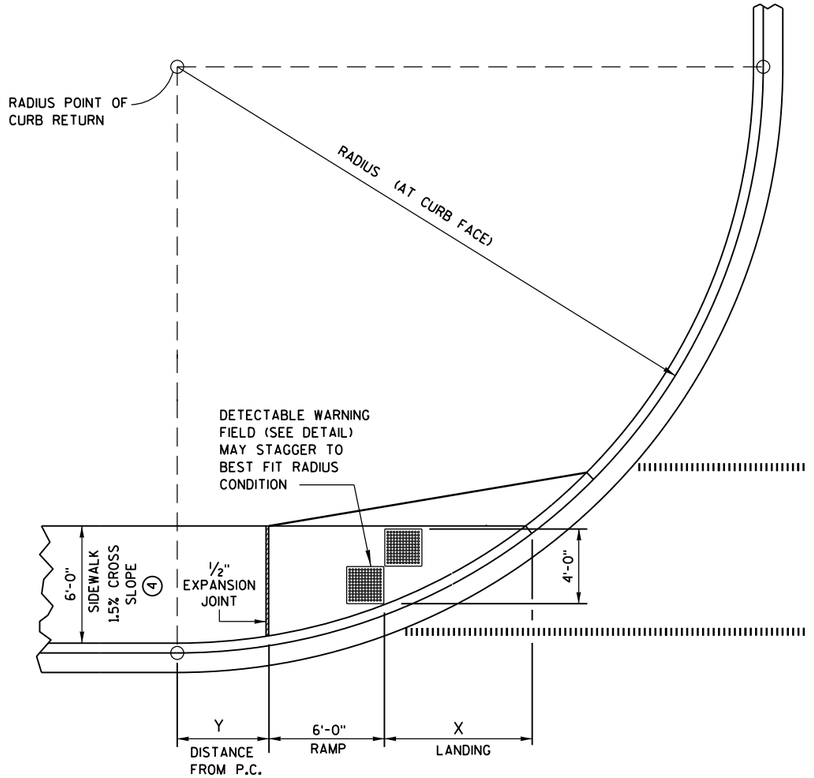

CURB RAMP TYPE 4A1
PLAN VIEW

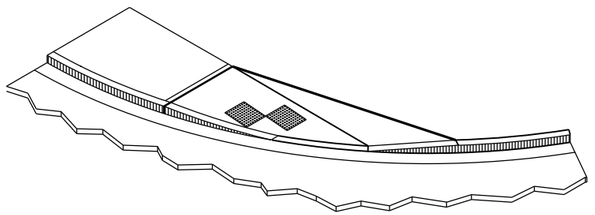

ISOMETRIC VIEW FOR TYPE 4A1

LEGEND

- ½" EXPANSION JOINT-SIDEWALK
- CONTRACTION JOINT FIELD LOCATED
- PAVEMENT MARKING CROSSWALK (WHITE)

CURB RAMPS TYPES 4A AND 4A1

STATE OF WISCONSIN
DEPARTMENT OF TRANSPOR

6

S.D.D. 8 D 5-15c

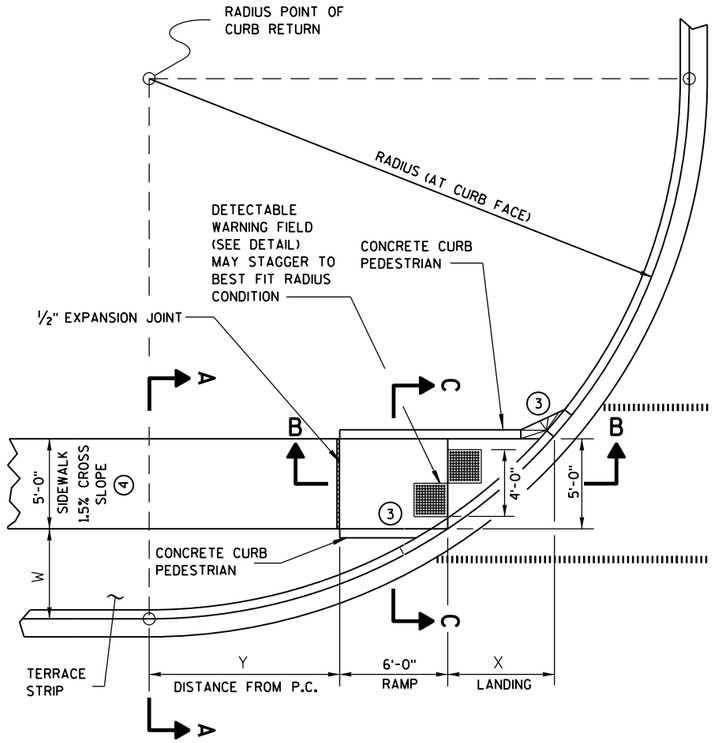

CURB RAMP TYPE 4B
PLAN VIEW

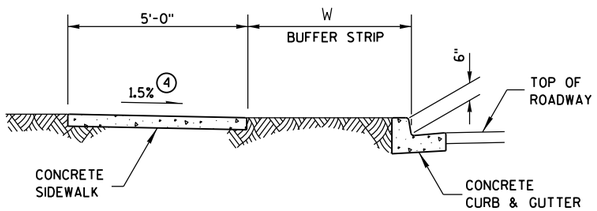

SECTION A-A FOR TYPE 4B

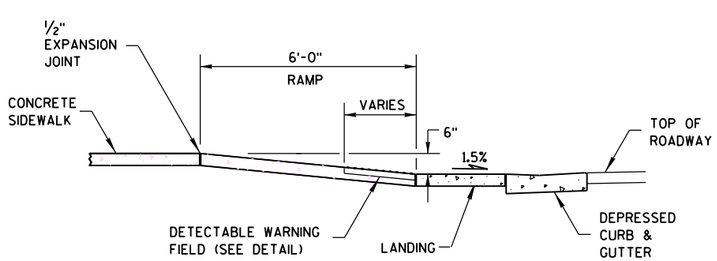

SECTION B-B FOR TYPE 4B

LEGEND

- ½" EXPANSION JOINT-SIDEWALK
- CONTRACTION JOINT FIELD LOCATED
- PAVEMENT MARKING CROSSWALK (WHITE)

RADIUS (AT CURB FACE)	W = 3'-0"		W = 4'-0"		W = 5'-0"		W = 6'-0"		W = 7'-0"	
	X	Y	X	Y	X	Y	X	Y	X	Y
20 FEET	5'-5½"	4'-6½"	4'-8½"	6'-0"	4'-1"	7'-2¾"	3'-7"	8'-3½"	3'-1½"	9'-2½"
30 FEET	7'-3¾"	7'-1"	6'-5½"	8'-11½"	5'-9¼"	10'-7"	5'-2½"	12'-0"	4'-8¾"	13'-3¼"
40 FEET	8'-9½"	9'-2½"	7'-10"	11'-5¼"	7'-1"	13'-4½"	6'-5¾"	15'-¾"	5'-11½"	16'-7¼"
50 FEET	10'-¾"	11'-¾"	9'-¼"	13'-7¼"	8'-2½"	15'-9½"	7'-6½"	17'-9"	6'-11¾"	19'-6¼"
60 FEET	11'-2½"	12'-8¾"	10'-¾"	15'-6½"	9'-2¼"	17'-11¾"	8'-5¾"	20'-1¾"	7'-10½"	22'-1½"

INTERMEDIATE RADII CAN BE INTERPOLATED

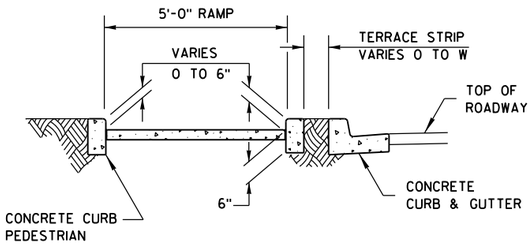

SECTION C-C FOR TYPE 4B

GENERAL NOTES

AVOID PLACING DRAINAGE STRUCTURES, JUNCTION BOXES OR OTHER OBSTRUCTIONS IN FRONT OF RAMP ACCESS AREAS.

RAMP SLOPES SHALL NOT BE STEEPER THAN 12:1.

DETECTABLE WARNING FIELDS THAT ARE INSTALLED AS A GROUP OR SIDE BY SIDE, SHALL BE FROM THE SAME MANUFACTURER.

(3) INSTALL TRANSITION NOSE. (INCIDENTAL TO OTHER PAY ITEMS.) DO NOT MARK TRANSITION NOSE.

(4) ±0.5% CONSTRUCTION TOLERANCE IN SIDEWALK CROSS SLOPE. THE SIDEWALK CROSS SLOPE SHALL NOT EXCEED 2% WITHOUT PRIOR APPROVAL FROM THE ENGINEER.

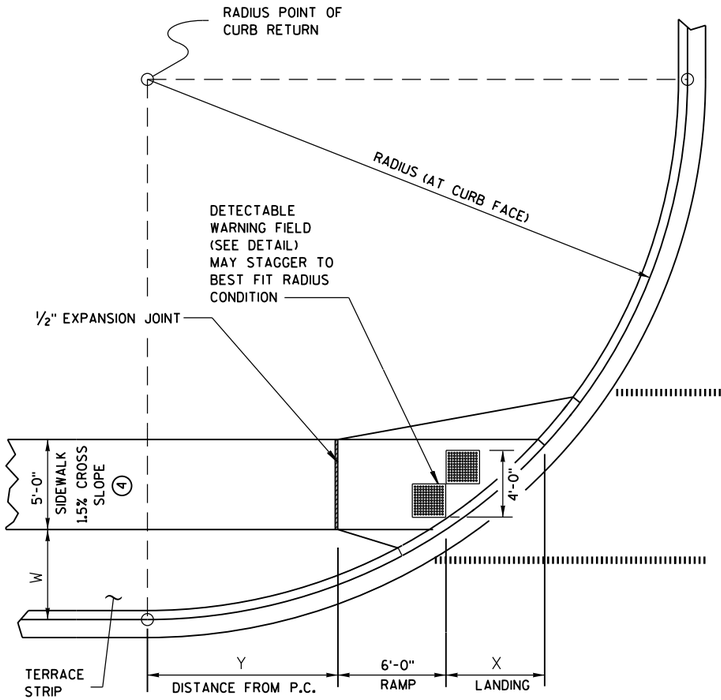

CURB RAMP TYPE 4B1
PLAN VIEW

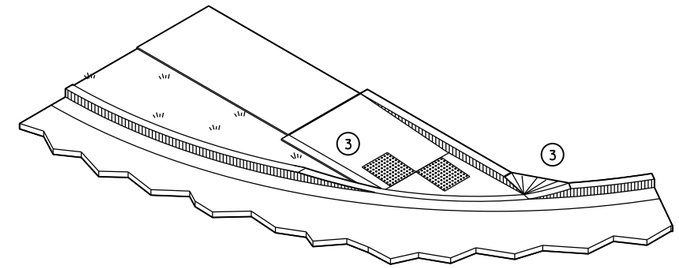

ISOMETRIC VIEW FOR TYPE 4B

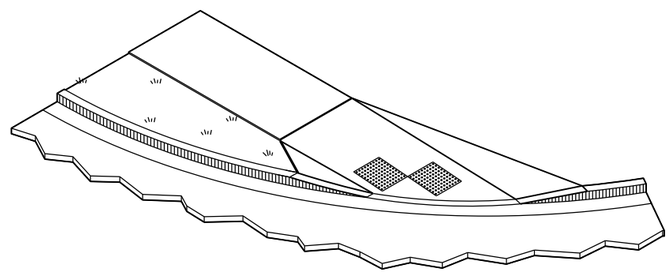

ISOMETRIC VIEW FOR TYPE 4B1

CURB RAMPS
TYPE 4B AND 4B1

STATE OF WISCONSIN
DEPARTMENT OF TRANSPOR

6

S.D.D. 8 D 5-15d

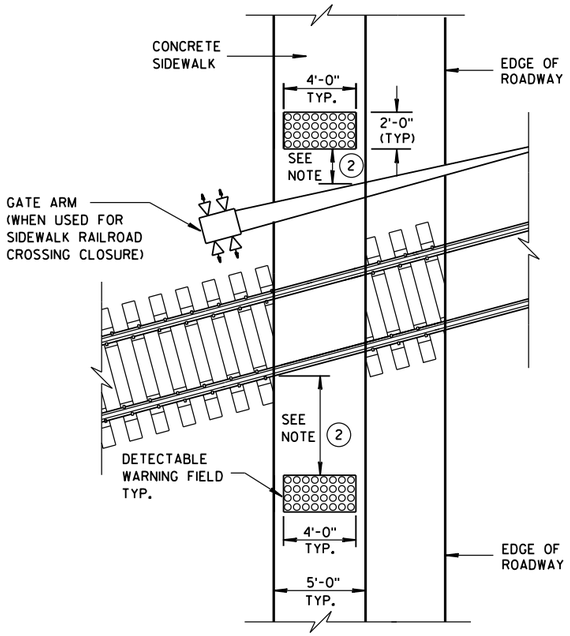

TYPE 8
DETECTABLE WARNINGS AT RAILROAD CROSSING

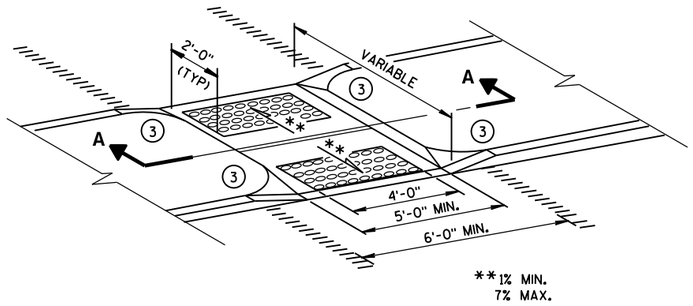

MEDIAN ISLAND
NON-ELEVATED CROSSING
TYPE 5

GENERAL NOTES

SIDEWALK CROSS SLOPE SHALL NOT EXCEED 2%.

DETECTABLE WARNING FIELDS THAT ARE INSTALLED AS A GROUP OR SIDE BY SIDE, SHALL BE FROM THE SAME MANUFACTURER.

(1) SLOPE SIDEWALK TOWARD LANDING AS SHOWN WHERE THERE IS NO TERRACE OR WHERE THE TERRACE WIDTH IS LESS THAN 6 FEET WIDE.

(2) THE EDGE OF THE DETECTABLE WARNING FIELD NEAREST TO A RAILROAD CROSSING SHALL BE 1.5 FEET ± 0.1' FROM THE FACE OF THE GATE ARM IF THE GATE ARM EXTENDS ACROSS THE SIDEWALK. WHERE THERE IS NO PEDESTRIAN GATE, THE EDGE OF THE DETECTABLE WARNING FIELD NEAREST TO THE RAILROAD CROSSING SHALL BE 15 FEET FROM THE NEAREST RAIL.

(3) INSTALL TRANSITION NOSE. (INCIDENTAL TO OTHER PAY ITEMS.) DO NOT MARK TRANSITION NOSE.

(4) ±0.5% CONSTRUCTION TOLERANCE IN SIDEWALK CROSS SLOPE. THE SIDEWALK CROSS SLOPE SHALL NOT EXCEED 2% WITHOUT PRIOR APPROVAL FROM THE ENGINEER.

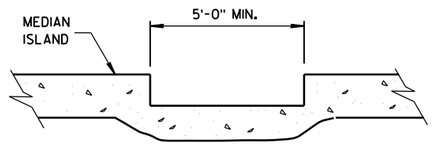

SECTION A-A

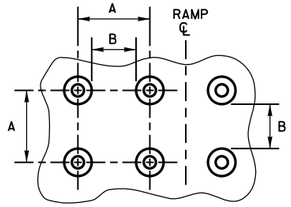

PLAN VIEW

	MIN.	MAX.
A	1.6"	2.4"
B	0.65"	1.5"
C	*	*
D	0.9"	1.4"

* THE C DIMENSION IS 50% TO 65% OF THE D DIMENSION.

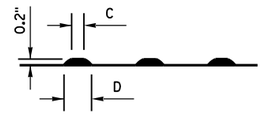

ELEVATION VIEW

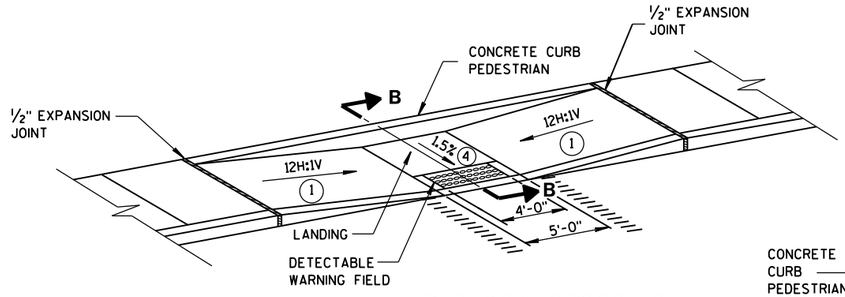

MID-BLOCK CROSSING
TYPE 7A

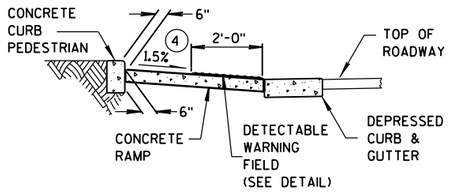

SECTION B-B

TRUNCATED DOMES
DETECTABLE WARNING PATTERN DETAIL

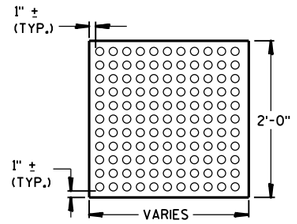

PLAN VIEW

DETECTABLE WARNING FIELD (TYPICAL)

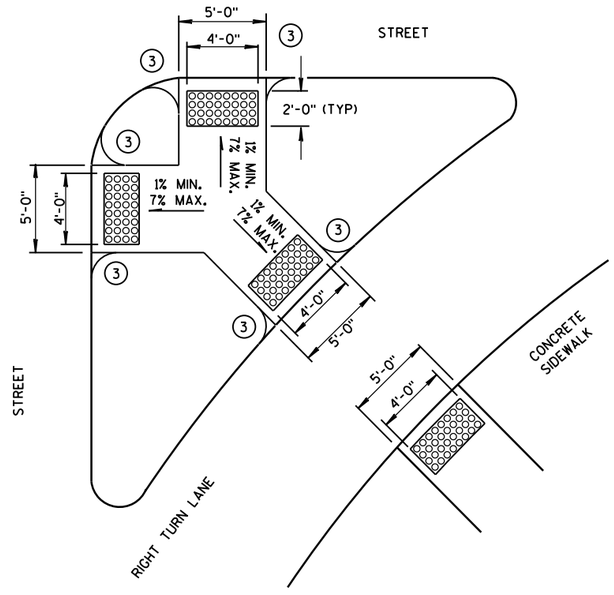

TYPE 6
DETECTABLE WARNING AT ISLANDS

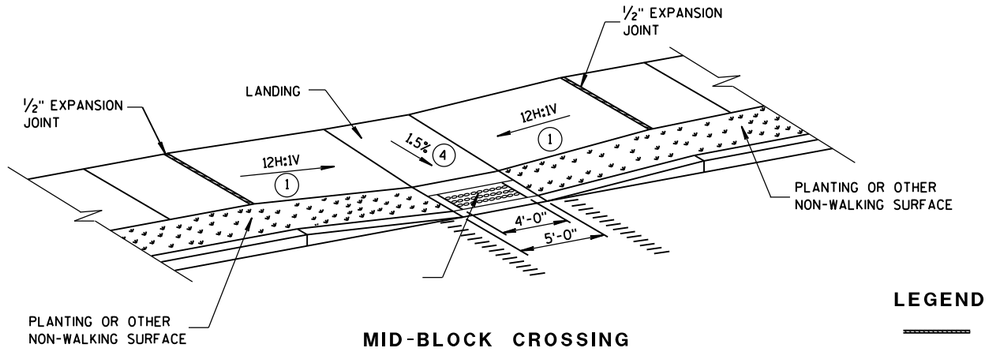

MID-BLOCK CROSSING
TYPE 7B

NOTE: THESE PARALLEL AND PARALLEL/PERPENDICULAR CURB RAMPS MAY BE USED AT INTERSECTIONS AND MID BLOCK LOCATIONS.

LEGEND

- ½" EXPANSION JOINT-SIDEWALK
- CONTRACTION JOINT FIELD LOCATED
- PAVEMENT MARKING CROSSWALK (WHITE)

CURB RAMPS
TYPES 5, 6, 7A, 7B & 8

STATE OF WISCONSIN
DEPARTMENT OF TRANSPORTATION

APPROVED
2-6-2013 DATE
/S/ Jerry H. Zogg
ROADWAY STANDARDS DEVELOPMENT ENGINEER
FHWA

6

S.D.D. 8 D 5-15e

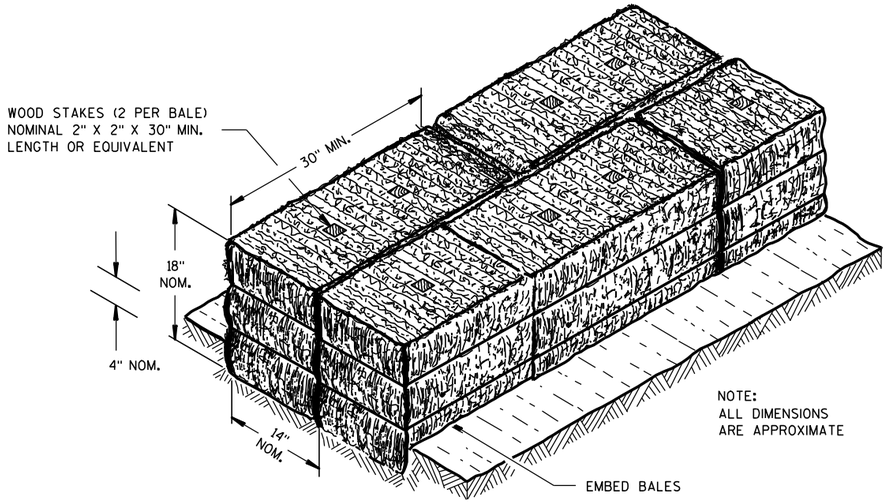

SECTION A-A

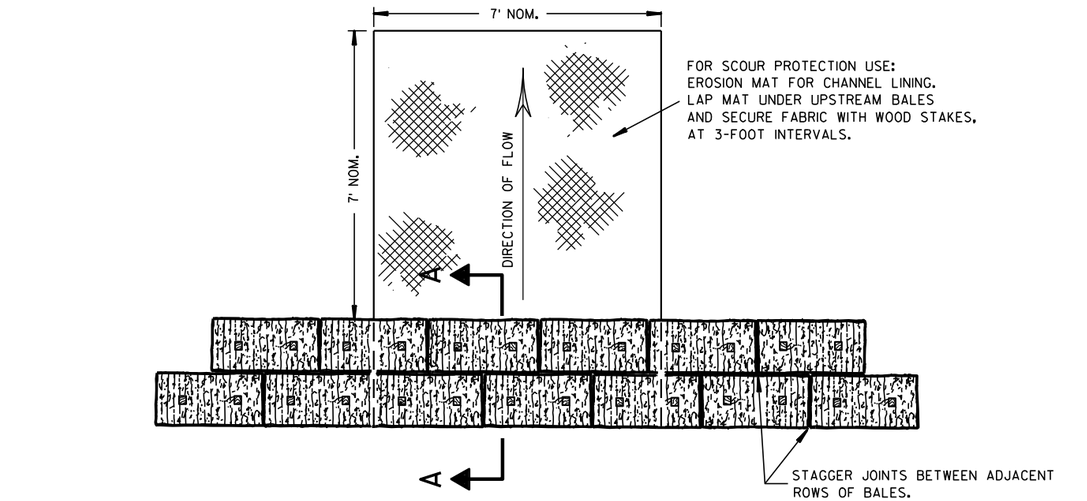

PLAN VIEW

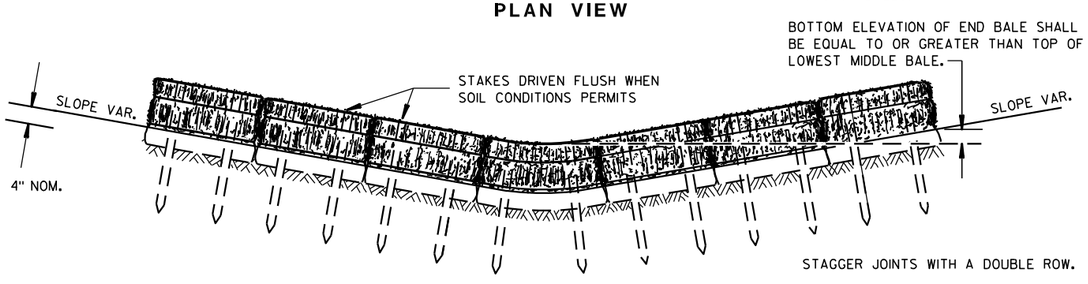

FRONT ELEVATION

TEMPORARY DITCH CHECK USING EROSION BALES (1)

GENERAL NOTES

DETAILS OF CONSTRUCTION, MATERIALS AND WORKMANSHIP NOT SHOWN ON THIS DRAWING SHALL CONFORM TO THE PERTINENT REQUIREMENTS OF THE STANDARD SPECIFICATIONS AND THE APPLICABLE SPECIAL PROVISIONS.

(1) TEMPORARY DITCH CHECKS EITHER EROSION BALES OR MANUFACTURED SHALL BE PAID FOR UNDER THE BID ITEM OF TEMPORARY DITCH CHECK. THE DEPARTMENT WILL NOT PAY FOR TEMPORARY DITCH CHECKS CONSTRUCTED OF A SINGLE ROW OF EROSION BALES.

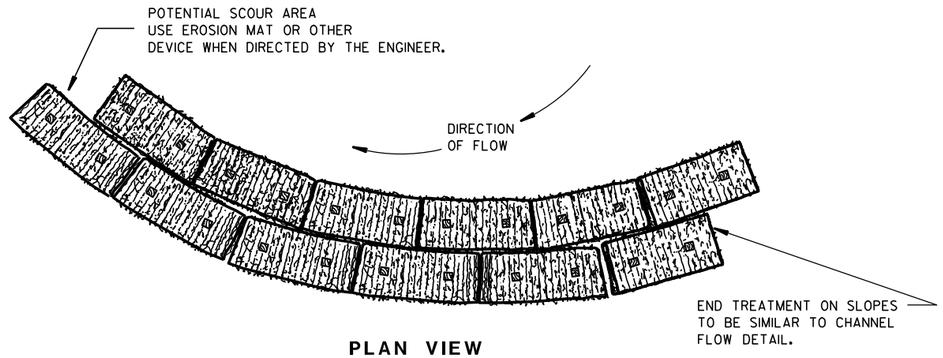

PLAN VIEW

WHEN ALTERING THE DIRECTION OF FLOW

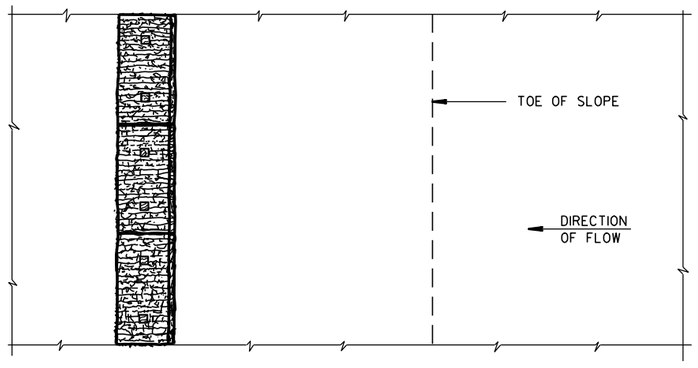

PLAN VIEW

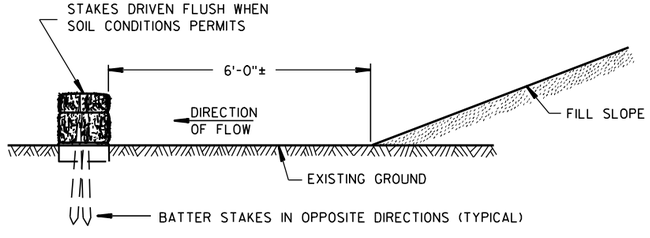

FRONT ELEVATION

WHEN EXISTING GROUND SLOPES AWAY FROM FILL SLOPE

EROSION BALES FOR SHEET FLOW

TYPICAL INSTALLATIONS OF EROSION BALES / TEMPORARY DITCH CHECKS

STATE OF WISCONSIN
DEPARTMENT OF TRANSPORTATION

APPROVED

6/04/02 — DATE

/S/ Beth Cannestra — CHIEF ROADWAY DEVELOPMENT ENGINEER

FHWA

6

S.D.D. 8 E 8-3

6

S.D.D. 8 E 8-3

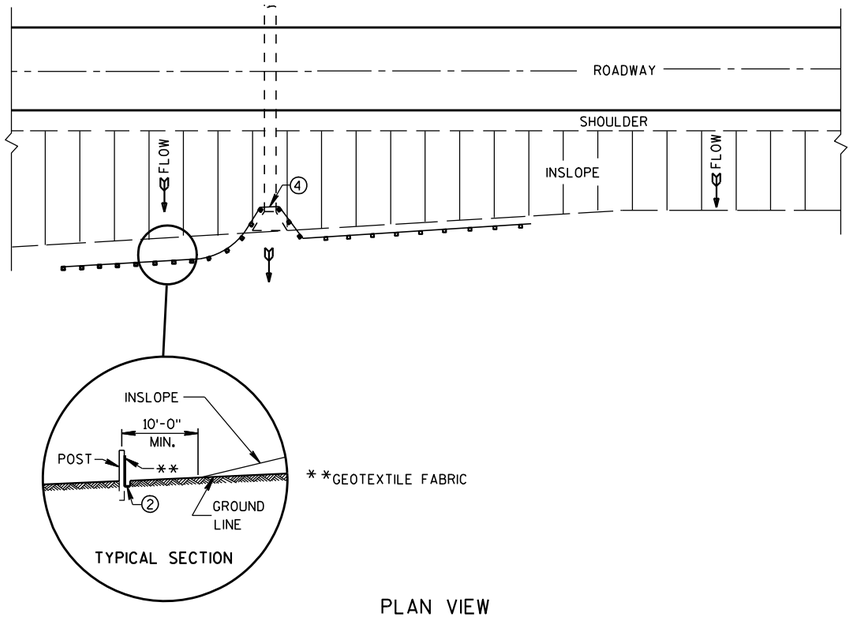

PLAN VIEW

TYPICAL APPLICATION OF SILT FENCE

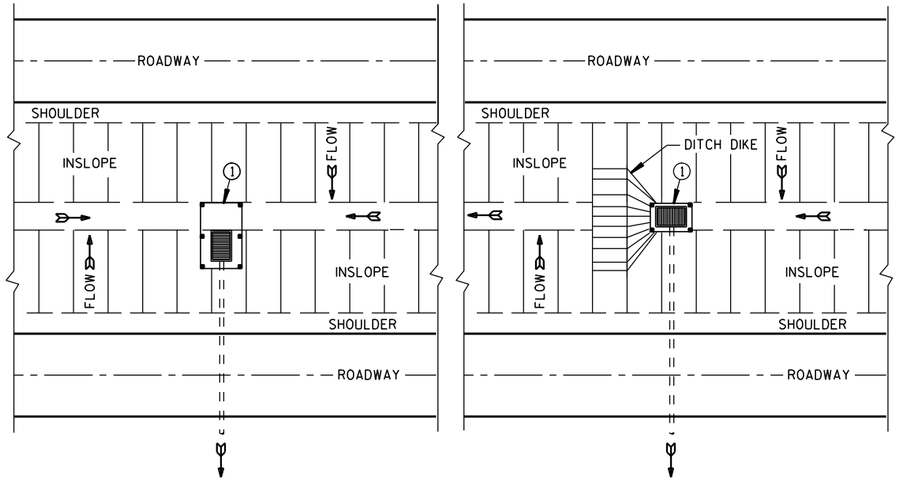

PLAN VIEW

SILT FENCE AT MEDIAN SURFACE DRAINS

GENERAL NOTES

DETAILS OF CONSTRUCTION NOT SHOWN ON THIS DRAWING SHALL CONFORM TO THE PERTINENT REQUIREMENTS OF THE STANDARD SPECIFICATIONS AND APPLICABLE SPECIAL PROVISIONS.

① HORIZONTAL BRACE REQUIRED WITH 2" X 4" WOODEN FRAME OR EQUIVALENT AT TOP OF POSTS.

② FOR MANUAL INSTALLATIONS THE TRENCH SHALL BE A MINIMUM OF 4" WIDE & 6" DEEP TO BURY AND ANCHOR THE GEOTEXTILE FABRIC. FOLD MATERIAL TO FIT TRENCH AND BACKFILL & COMPACT TRENCH WITH EXCAVATED SOIL.

③ WOOD POSTS SHALL BE A MINIMUM SIZE OF 1⅛" X 1⅛" OF OAK OR HICKORY.

④ SILT FENCE TO EXTEND ACROSS THE TOP OF THE PIPE.

⑤ CONSTRUCT SILT FENCE FROM A CONTINUOUS ROLL IF POSSIBLE BY CUTTING LENGTHS TO AVOID JOINTS. IF A JOINT IS NECESSARY USE ONE OF THE FOLLOWING TWO METHODS; A) OVERLAP THE END POSTS AND TWIST, OR ROTATE, AT LEAST 180 DEGREES, B) HOOK THE END OF EACH SILT FENCE LENGTH.

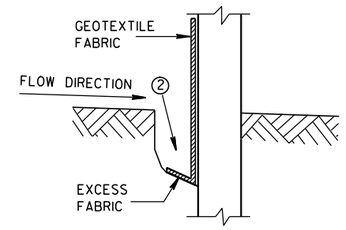

TRENCH DETAIL

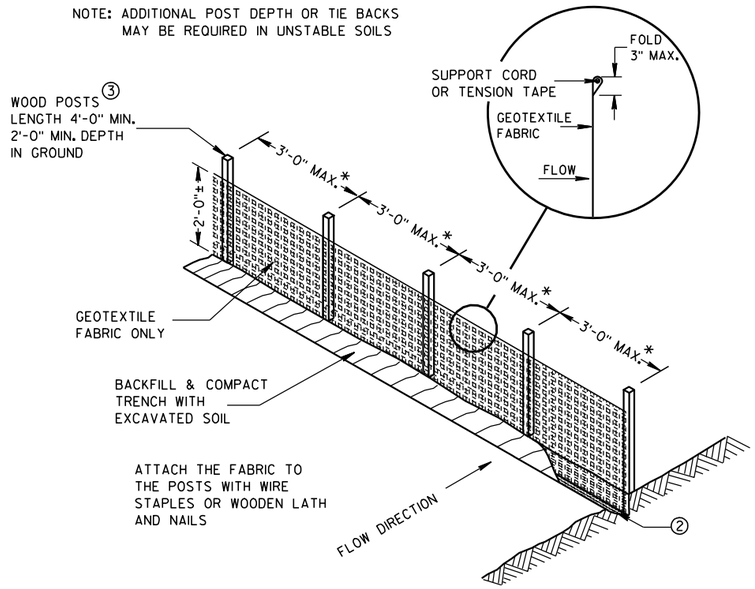

*NOTE: 8'-0" POST SPACING ALLOWED IF A WOVEN GEOTEXTILE FABRIC IS USED.

SILT FENCE

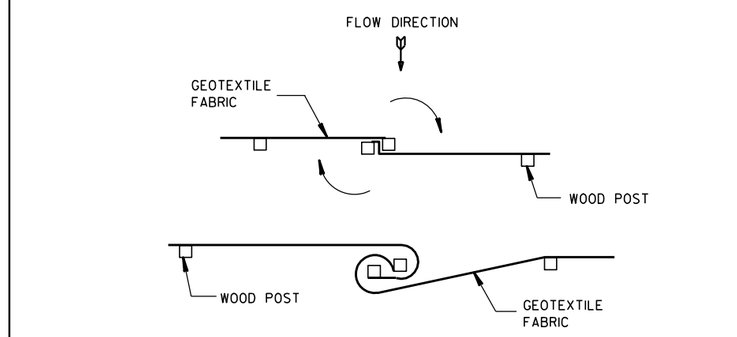

TWIST METHOD

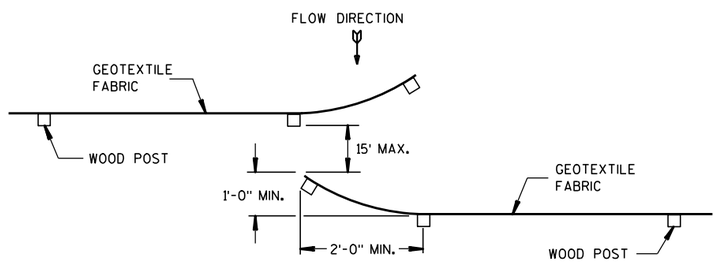

HOOK METHOD

JOINING TWO LENGTHS OF SILT FENCE ⑤

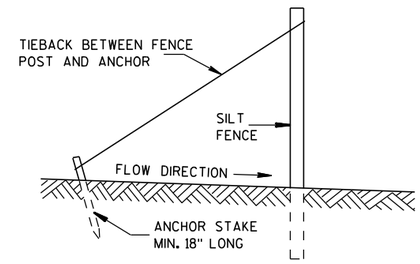

SILT FENCE TIE BACK

(WHEN REQUIRED BY THE ENGINEER)

SILT FENCE

STATE OF WISCONSIN
DEPARTMENT OF TRANSPORTATION

APPROVED
4-29-05 DATE
/S/ Beth Cannestra
CHIEF ROADWAY DEVELOPMENT ENGINEER
FHWA

6

S.D.D. 8 E 9-6

6

S.D.D. 8 E 9-6

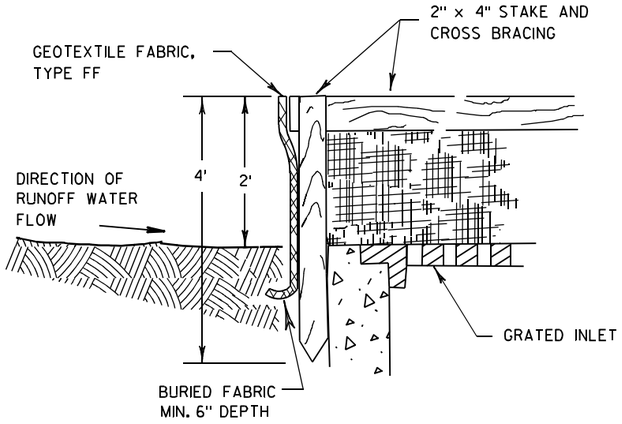

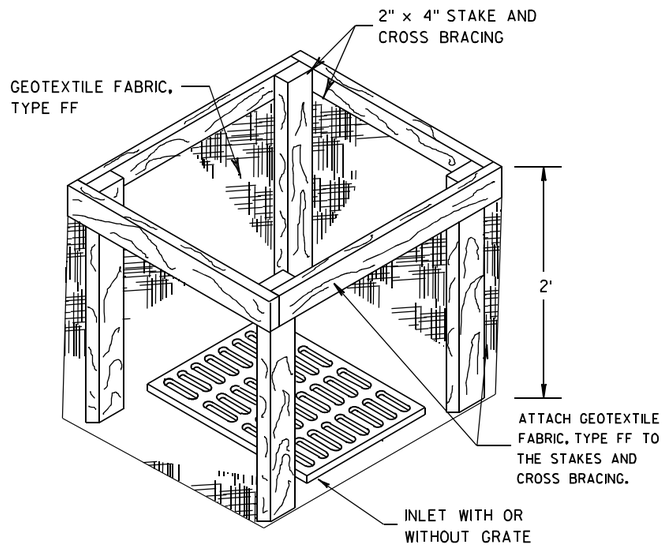

INLET PROTECTION, TYPE A

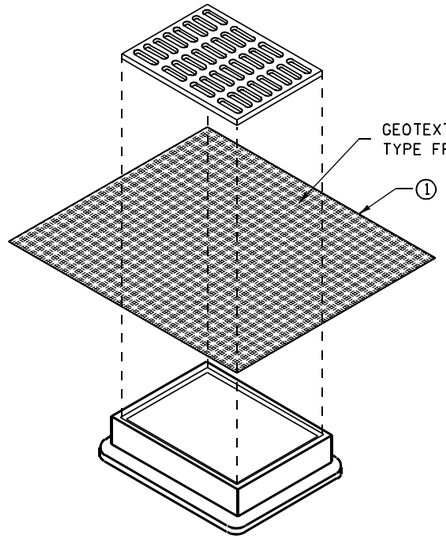

INLET PROTECTION, TYPE B
(WITHOUT CURB BOX)

(CAN BE INSTALLED IN ANY INLET WITHOUT A CURB BOX)

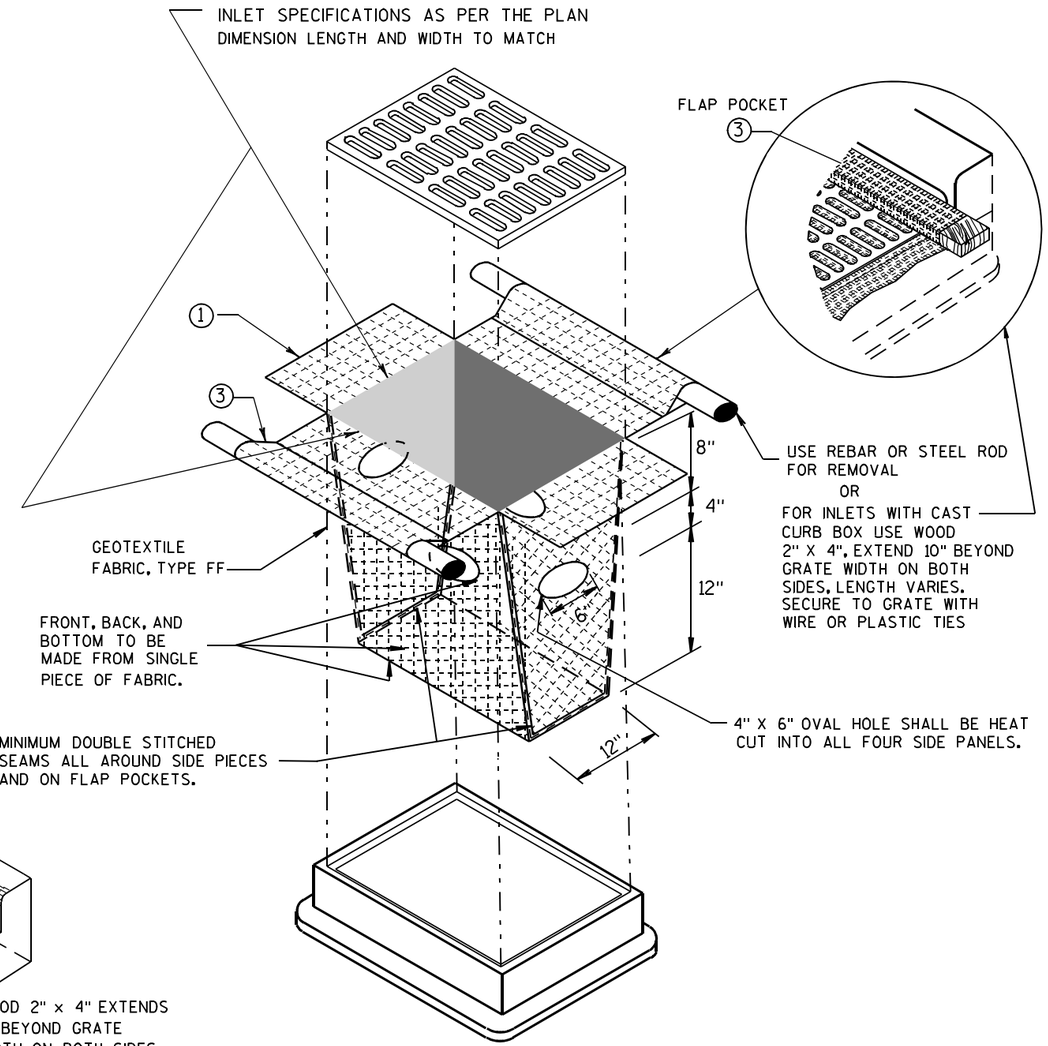

INLET PROTECTION, TYPE D

(CAN BE INSTALLED IN ANY INLET TYPE WITH
OR WITHOUT A CURB BOX AS PER NOTE ②)

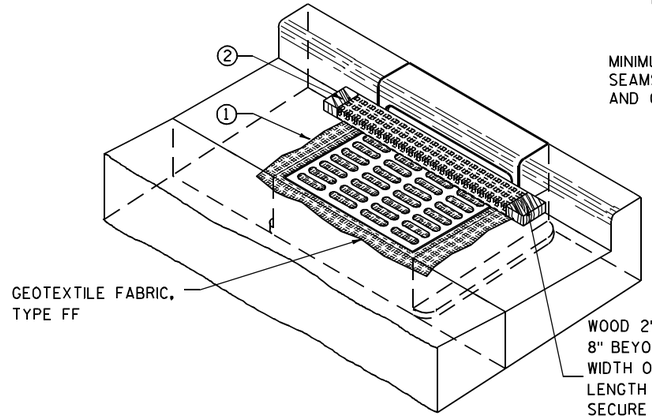

INLET PROTECTION, TYPE C (WITH CURB BOX)

GENERAL NOTES

INLET PROTECTION DEVICES SHALL BE MAINTAINED OR REPLACED AT THE DIRECTION OF THE ENGINEER.

MANUFACTURED ALTERNATIVES APPROVED AND LISTED ON THE DEPARTMENT'S EROSION CONTROL PRODUCT ACCEPTABILITY LIST MAY BE SUBSTITUTED.

WHEN REMOVING OR MAINTAINING INLET PROTECTION, CARE SHALL BE TAKEN SO THAT THE SEDIMENT TRAPPED ON THE GEOTEXTILE FABRIC DOES NOT FALL INTO THE INLET. ANY MATERIAL FALLING INTO THE INLET SHALL BE REMOVED IMMEDIATELY.

① FINISHED SIZE, INCLUDING FLAP POCKETS WHERE REQUIRED, SHALL EXTEND A MINIMUM OF 10" AROUND THE PERIMETER TO FACILITATE MAINTENANCE OR REMOVAL.

② FOR INLET PROTECTION, TYPE C (WITH CURB BOX), AN ADDITIONAL 18" OF FABRIC IS WRAPPED AROUND THE WOOD AND SECURED WITH STAPLES. THE WOOD SHALL NOT BLOCK THE ENTIRE HEIGHT OF THE CURB BOX OPENING.

③ FLAP POCKETS SHALL BE LARGE ENOUGH TO ACCEPT WOOD 2X4.

INSTALLATION NOTES

TYPE B & C

TRIM EXCESS FABRIC IN THE FLOW LINE TO WITHIN 3" OF THE GRATE.

THE CONTRACTOR SHALL DEMONSTRATE A METHOD OF MAINTENANCE, USING A SEWN FLAP, HAND HOLDS OR OTHER METHOD TO PREVENT ACCUMULATED SEDIMENT FROM ENTERING THE INLET.

TYPE D

DO NOT INSTALL INLET PROTECTION TYPE D IN INLETS SHALLOWER THAN 30", MEASURED FROM THE BOTTOM OF THE INLET TO THE TOP OF THE GRATE.

TRIM EXCESS FABRIC IN THE FLOW LINE TO WITHIN 3" OF THE GRATE.

THE INSTALLED BAG SHALL HAVE A MINIMUM SIDE CLEARANCE, BETWEEN THE INLET WALLS AND THE BAG, MEASURED AT THE BOTTOM OF THE OVERFLOW HOLES, OF 3". WHERE NECESSARY THE CONTRACTOR SHALL CINCH THE BAG, USING PLASTIC ZIP TIES, TO ACHIEVE THE 3" CLEARANCE. THE TIES SHALL BE PLACED AT A MAXIMUM OF 4" FROM THE BOTTOM OF THE BAG.

INLET PROTECTION
TYPE A, B, C, AND D

STATE OF WISCONSIN
DEPARTMENT OF TRANSPORTATION

APPROVED

10/16/02
DATE

/S/ Beth Cannestra
CHIEF ROADWAY DEVELOPMENT ENGINEER

FHWA

6
S.D.D. 8 E 10-2

METAL APRON ENDWALLS

PIPE DIA. (IN.)	MIN. THICK. (Inches) STEEL	MIN. THICK. (Inches) ALUM.	DIMENSIONS (Inches) A (±1")	B (MAX.)	H (±1")	L (±1 1/2")	L1 ①	L2 ①	W (±2")	APPROX. SLOPE	BODY
12	.064	.060	6	6	6	21	12	17 1/2	24	2 1/2 to 1	1 Pc.
15	.064	.060	7	8	6	26	14	21 3/4	30	2 1/2 to 1	1 Pc.
18	.064	.060	8	10	6	31	15	28 1/4	36	2 1/2 to 1	1 Pc.
21	.064	.060	9	12	6	36	18	29 5/8	42	2 1/2 to 1	1 Pc.
24	.064	.075	10	13	6	41	18	37 1/4	48	2 1/2 to 1	1 Pc.
30	.079	.075	12	16	8	51	18	52 1/4	60	2 1/2 to 1	1 Pc.
36	.079	.105	14	19	9	60	24	59 3/4	72	2 1/2 to 1	2 Pc.
42	.109	.105	16	22	11	69	24	75 5/8	84	2 1/2 to 1	2 Pc.
48	.109	.105	18	27	12	78	24	81	90	2 1/4 to 1	3 Pc.
54	.109	.105	18	30	12	84	30	85 1/2	102	2 1/4 to 1	3 Pc.
60	.109×	.105×	18	33	12	87	—	—	114	2 to 1	3 Pc.
66	.109×	.105×	18	36	12	87	—	—	120	2 to 1	3 Pc.
72	.109×	.105×	18	39	12	87	—	—	126	2 to 1	3 Pc.
78	.109×	.105×	18	42	12	87	—	—	132	1 1/2 to 1	3 Pc.
84	.109×	.105×	18	45	12	87	—	—	138	1 1/2 to 1	3 Pc.
90	.109×	.105×	18	37	12	87	—	—	144	1 1/2 to 1	3 Pc.
96	.109×	.105×	18	35	12	87	—	—	150	1 1/2 to 1	3 Pc.

× EXCEPT CENTER PANEL SEE GENERAL NOTES

REINFORCED CONCRETE APRON ENDWALLS

PIPE DIA. (IN.)	DIMENSIONS (Inches) T	A	B	C	D	E	G	APPROX. SLOPE
12	2	4	24	48 7/8	72 1/8	24	2	3 to 1
15	2 1/4	6	27	46	73	30	2 1/4	3 to 1
18	2 1/2	9	27	46	73	36	2 1/2	3 to 1
21	2 3/4	9	36	37 1/2	73 1/2	42	2 3/4	3 to 1
24	3	9 1/2	43 1/2	30	73 1/2	48	3	3 to 1
27	3 1/4	10 1/2	49 1/2	24	73 1/2	54	3 1/4	3 to 1
30	3 1/2	12	54	19 3/4	73 1/2	60	3 1/2	3 to 1
36	4	15	63	34 3/4	97 3/4	72	4	3 to 1
42	4 1/2	21	63	35	98	78	4 1/2	3 to 1
48	5	24	72	26	98	84	5	3 to 1
54	5 1/2	27	65	* 33 1/4 - ** 35	* 98 1/4 - ** 100	90	5 1/2	2 2/5 to 1
60	6	* 30 - ** 35	60	39	99	96	5	2 to 1
66	6 1/2	* 24 - ** 30	* 72 - ** 78	* 21 - ** 27	99	102	5 1/2	2 to 1
72	7	* 24 - ** 36	78	21	99	108	6	2 to 1
78	7 1/2	* 24 - ** 36	78	21	99	114	6 1/2	2 to 1
84	8	36	90 1/2	21	111 1/2	120	6 1/2	1 1/2 to 1
90	8 1/2	41	87 1/2	24	111 1/2	132	6 1/2	1 1/2 to 1

* MINIMUM
** MAXIMUM

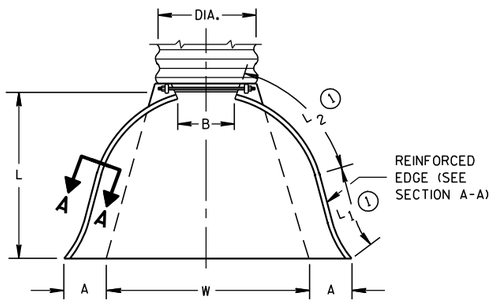

PLAN VIEW

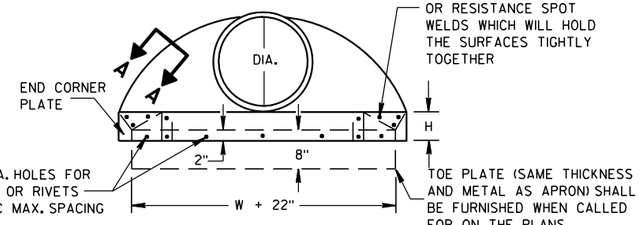

END VIEW

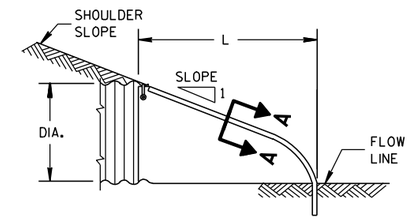

SIDE ELEVATION

METAL ENDWALLS

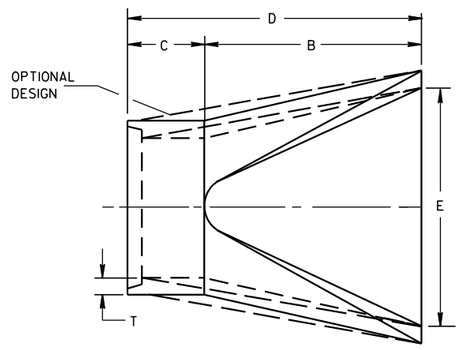

PLAN

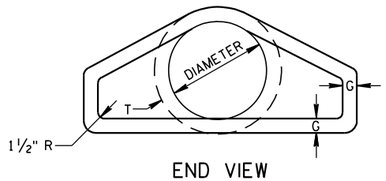

END VIEW

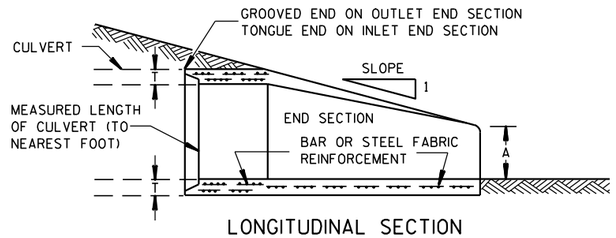

LONGITUDINAL SECTION

CONCRETE ENDWALLS

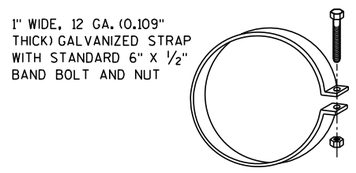

ALTERNATE FOR TYPE 1 CONNECTION

END SECTION CONNECTOR STRAP

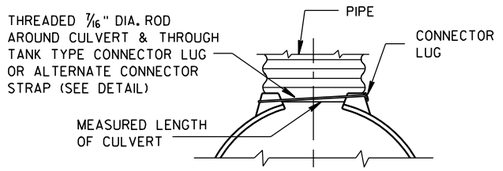

TYPE 1
FOR 12" THRU 24" CORR. PIPE

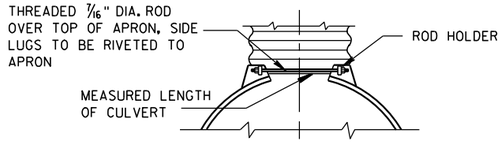

TYPE 2
FOR 30" THRU 96" CORR. PIPE

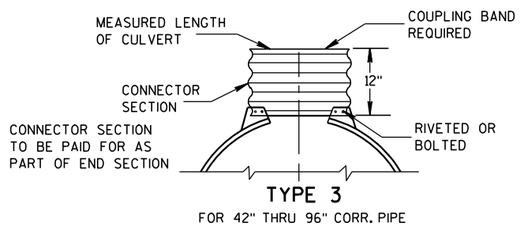

TYPE 3
FOR 42" THRU 96" CORR. PIPE

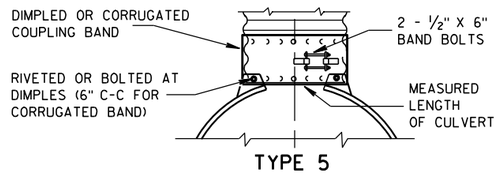

TYPE 5
ALTERNATE FOR:
ALL SIZES CORRUGATED CIRCULAR PIPE

NOTE: DIMPLED BAND FITS OVER OUTSIDE OF ENDWALL. AND CORRUGATED BAND FITS INSIDE ENDWALL. DIMPLED BAND MAY BE USED WITH HELICALLY CORRUGATED PIPE.

FOR CIRCUMFERENTIALLY CORRUGATED PIPE USE ENDWALL CONNECTION DETAILS 1, 2, 3 OR 5 AS APPLICABLE.

FOR HELICALLY CORRUGATED PIPE USE ENDWALL CONNECTION DETAILS 1, 2 OR 5.

FOR HELICALLY CORRUGATED PIPES WITH TWO CIRCUMFERENTIAL CORRUGATIONS AT EACH END USE ENDWALL CONNECTION DETAILS 1, 2 OR 3.

CONNECTION DETAILS

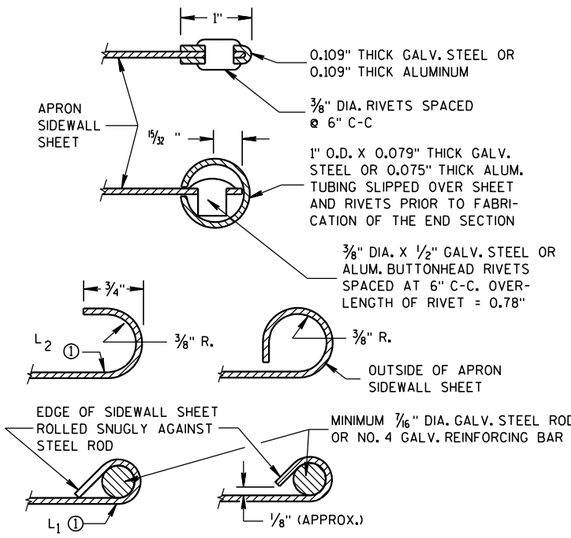

SECTION A-A

GENERAL NOTES

DETAILS OF CONSTRUCTION, MATERIALS AND WORKMANSHIP NOT SHOWN ON THIS DRAWING SHALL CONFORM TO THE PERTINENT REQUIREMENTS OF THE STANDARD SPECIFICATIONS AND THE APPLICABLE SPECIAL PROVISIONS.

CONCRETE CULVERT ENDWALLS MAY NOT BE USED WITH GALVANIZED STEEL OR ALUMINUM CULVERT PIPE OR VISE VERSA. GALVANIZED STEEL OR ALUMINUM ENDWALLS SHALL NORMALLY BE INSTALLED ON CULVERT PIPE OF THE SAME METAL.

ALL THREE PIECE STEEL APRON ENDWALLS FOR 60" DIAMETER PIPE AND LARGER SHALL HAVE 0.109" SIDES AND 0.138" CENTER PANELS. ALL THREE PIECE ALUMINUM APRON ENDWALLS FOR 60" DIAMETER PIPE AND LARGER SHALL HAVE 0.105" SIDES AND 0.134" CENTER PANELS. THE WIDTH OF CENTER PANELS SHALL BE GREATER THAN 20 PERCENT OF THE PIPE PERIMETER.

LAP SEAMS SHALL BE TIGHTLY JOINED BY GALVANIZED RIVETS OR BOLTS FOR STEEL UNITS AND ALUMINUM RIVETS AND BOLTS FOR ALUMINUM UNITS. FOR THE 60" THROUGH 96" DIAMETER APRON ENDWALL SIZES, THE REINFORCED EDGES AND CENTER PANEL SEAMS SHALL BE FURTHER REINFORCED WITH GALVANIZED STEEL OR ALUMINUM STIFFENER ANGLES. THE ANGLES SHALL BE ATTACHED BY GALVANIZED NUTS AND BOLTS FOR STEEL UNITS AND ALUMINUM NUTS AND BOLTS FOR ALUMINUM UNITS.

WHERE TWO OR MORE PIPES WITH APRON ENDWALLS ARE LAID ADJACENT TO EACH OTHER, THEY SHALL BE SEPARATED BY A DISTANCE SUFFICIENT TO PROVIDE A MINIMUM CLEARANCE OF 6 INCHES BETWEEN APRON ENDWALLS.

① FOR PIPE SIZES UP TO 60" DIAMETER, A 180° ROLLED EDGE MAY BE USED INSTEAD OF STEEL ROD REINFORCEMENT. SEE SECTION A-A.

APRON ENDWALLS FOR CULVERT PIPE

STATE OF WISCONSIN
DEPARTMENT OF TRANSPORTATION

APPROVED
11/30/94 DATE
/S/ Rory L. Rhinesmith
CHIEF ROADWAY DEVELOPMENT ENGINEER
FHWA

6
S.D.D. 8 F 1-11

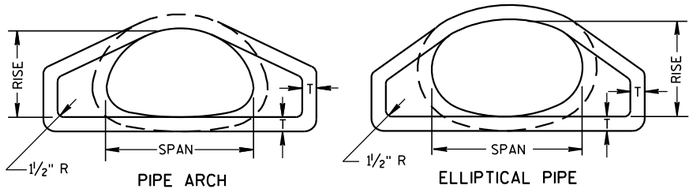

END VIEW

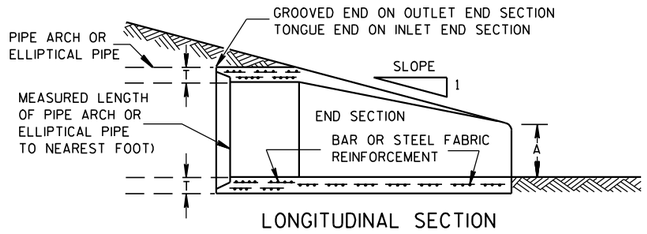

LONGITUDINAL SECTION

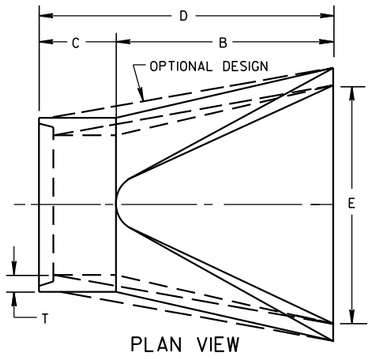

PLAN VIEW

CONCRETE ENDWALLS

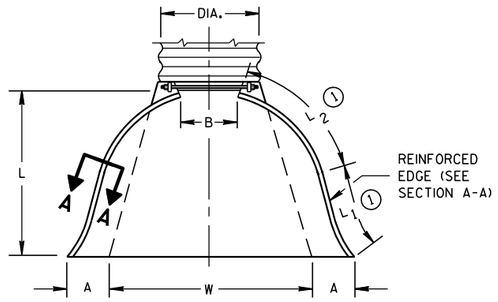

PLAN VIEW

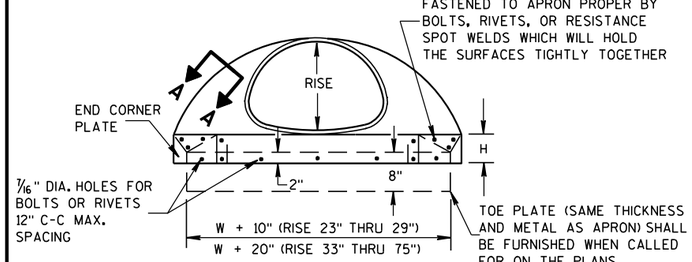

END VIEW

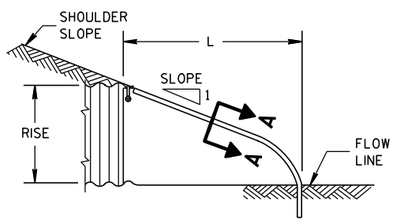

SIDE ELEVATION

METAL ENDWALLS

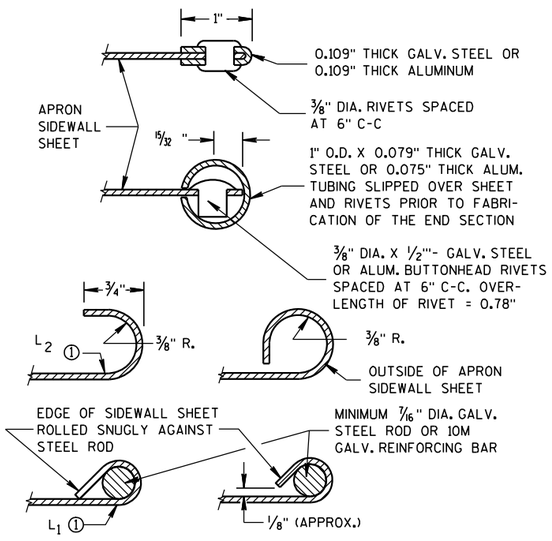

SECTION A-A

2- 2/3" X 1/2" CORRUGATIONS

EQUIV. DIA. (Inches)	(Inches) SPAN	(Inches) RISE	MIN. THICK. (Inches) STEEL	MIN. THICK. (Inches) ALUM.	DIMENSIONS (Inches) A (±1")	B (MAX.)	H (±1")	L (±1 1/2")	L1 ①	L2 ①	W (±2")	APPROX. SLOPE	BODY
15	17	13	.064	.060	7	9	6	19	14	16	30	2½ to 1	1 Pc.
18	21	15	.064	.060	7	10	6	23	14	19 3/8	36	2½ to 1	1 Pc.
21	24	18	.064	.060	8	12	6	28	18	21¾	42	2½ to 1	1 Pc.
24	28	20	.064	.060	9	14	6	32	18	27½	48	2½ to 1	1 Pc.
30	35	24	.079	.075	10	16	6	39	18	37 5/8	60	2½ to 1	1 Pc.
36	42	29	.079	.075	12	18	8	46	24	45 3/8	75	2½ to 1	1 Pc.
42	49	33	.109	.105	13	21	9	53	24	54¾	85	2½ to 1	2 Pc.
48	57	38	.109	.105	18	26	12	63	24	68	90	2½ to 1	3 Pc.
54	64	43	.109	.105	18	30	12	70	24	72¾	102	2¼ to 1	3 Pc.
60	71	47	.109*	.105*	18	33	12	77	30	82¼	114	2¼ to 1	3 Pc.
66	77	52	.109*	.105*	18	36	12	77	—	—	126	2 to 1	3 Pc.
72	83	57	.109*	.105*	18	39	12	77	—	—	138	2 to 1	3 Pc.

3" X 1" CORRUGATIONS

EQUIV. DIA. (Inches)	(Inches) SPAN	(Inches) RISE	MIN. THICK. (Inches) STEEL	MIN. THICK. (Inches) ALUM.	DIMENSIONS (Inches) A (±1")	B (MAX.)	H (±1")	L (±1 1/2")	L1 ①	L2 ①	W (±2")	APPROX. SLOPE	BODY
48	53	41	.109	.105	18	26	12	63	24	72¾	90	2½ to 1	2 Pc.
54	60	46	.109	.105	18	30	12	70	30	82¼	102	2 to 1	2 Pc.
60	66	51	.109*	.105*	18	33	12	77	—	—	114	1½ to 1	3 Pc.
66	73	55	.109*	.105*	18	36	12	77	—	—	126	1½ to 1	3 Pc.
72	81	59	.109*	.105*	18	39	12	77	—	—	138	2 to 1	3 Pc.
78	87	63	.109*	.105*	22	38	12	77	—	—	148	1½ to 1	3 Pc.
84	95	67	.109*	.105*	22	34	12	77	—	—	162	1½ to 1	3 Pc.
90	103	71	.109*	.105*	22	38	12	77	—	—	174	1½ to 1	3 Pc.
96	112	75	.109*	.105*	24	40	12	77	—	—	174	1½ to 1	3 Pc.

NOTE: ALL SPLICES TO BE LAP RIVETED OR BOLTED.

* EXCEPT CENTER PANEL SEE GENERAL NOTES

REINFORCED CONCRETE PIPE ARCH

EQUIV. DIA. (Inches)	DIMENSIONS (Inches) ** SPAN	** RISE	T	A	B	C	D	E	APPROX. SLOPE
24	29	18	3	8½	39	33	72	48	3 to 1
30	36	22	3½	9½	50	46	96	60	3 to 1
36	44	27	4	11⅛	60	36	96	72	3 to 1
42	51	31	4½	15 13/16	60	36	96	78	3 to 1
48	58	36	5	21	60	36	96	84	3 to 1
54	65	40	5½	25½	60	36	96	90	3 to 1
60	73	45	6	31	60	36	96	96	3 to 1
72	88	54	7	31	60	39	99	120	2 to 1
84	102	62	8	28½	83	19	102	144	2 to 1

REINFORCED CONCRETE ELLIPTICAL PIPE

EQUIV. DIA. (Inches)	DIMENSIONS (Inches) ** SPAN	** RISE	T	A	B	C	D	E	APPROX. SLOPE
24	30	19	3¼	8½	39	33	72	48	3 to 1
30	38	24	3¾	9½	54	18	72	60	3 to 1
36	45	29	4½	11⅛	60	24	84	72	2½ to 1
42	53	34	5	15¾	60	36	96	78	2½ to 1
48	60	38	5½	21	60	36	96	84	2½ to 1
54	68	43	6	25½	60	36	96	90	2½ to 1
60	76	48	6½	30	60	36	96	96	2½ to 1

**NOMINAL SIZE

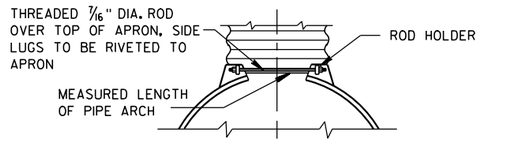

TYPE 2

FOR 17" X 13" THRU 112" X 75" PIPE ARCH

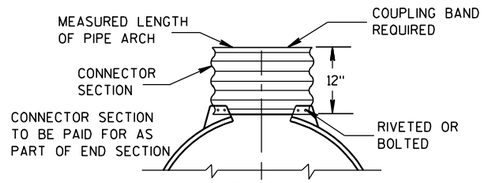

TYPE 3

FOR 64" X 43" THRU 112" X 75" PIPE ARCH

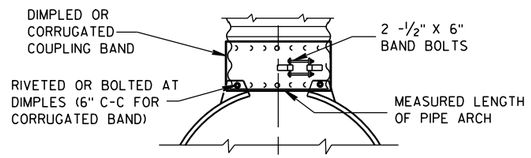

TYPE 5

ALTERNATE FOR:

ALL SIZES CORRUGATED PIPE ARCHES

NOTE: DIMPLED BAND FITS OVER OUTSIDE OF ENDWALL, AND CORRUGATED BAND FITS INSIDE ENDWALL.

CONNECTION DETAILS

GENERAL NOTES

DETAILS OF CONSTRUCTION, MATERIALS AND WORKMANSHIP NOT SHOWN ON THIS DRAWING SHALL CONFORM TO THE PERTINENT REQUIREMENTS OF THE STANDARD SPECIFICATIONS AND THE APPLICABLE SPECIAL PROVISIONS.

CONCRETE APRON ENDWALLS MAY NOT BE USED WITH GALVANIZED STEEL OR ALUMINUM CULVERT PIPE OR VISE VERSA. GALVANIZED STEEL OR ALUMINUM APRON ENDWALLS SHALL NORMALLY BE INSTALLED ON CULVERT PIPE OF THE SAME METAL.

ALL THREE PIECE STEEL APRON ENDWALLS FOR 66" X 51" PIPE ARCH AND LARGER SHALL HAVE 0.109" SIDES AND 0.138" CENTER PANELS. ALL THREE PIECE ALUMINUM APRON ENDWALLS FOR 66" X 51" PIPE ARCH AND LARGER SHALL HAVE 0.105" SIDES AND 0.134" CENTER PANELS. THE WIDTH OF CENTER PANELS SHALL BE GREATER THAN 20 PERCENT OF THE PIPE ARCH PERIMETER.

LAP SEAMS SHALL BE TIGHTLY JOINED BY GALVANIZED RIVETS OR BOLTS FOR STEEL UNITS AND ALUMINUM RIVETS AND BOLTS FOR ALUMINUM UNITS. FOR THE 77" X 52" THROUGH 112" X 75" APRON ENDWALL SIZES, THE REINFORCED EDGES AND CENTER PANEL SEAMS SHALL BE FURTHER REINFORCED WITH GALVANIZED STEEL OR ALUMINUM STIFFENER ANGLES. THE ANGLES SHALL BE ATTACHED BY GALVANIZED NUTS AND BOLTS FOR STEEL UNITS AND ALUMINUM NUTS AND BOLTS FOR ALUMINUM UNITS.

WHERE TWO OR MORE PIPES WITH APRON ENDWALLS ARE LAID ADJACENT TO EACH OTHER, THEY SHALL BE SEPARATED BY A DISTANCE SUFFICIENT TO PROVIDE A MINIMUM CLEARANCE OF 6 INCHES BETWEEN APRON ENDWALLS.

① FOR PIPE ARCH SIZES UP TO 73" X 55" A 180° ROLLED EDGE MAY BE USED INSTEAD OF STEEL ROD REINFORCEMENT. SEE SECTION A-A.

APRON ENDWALLS FOR PIPE ARCH AND ELLIPTICAL PIPE

STATE OF WISCONSIN
DEPARTMENT OF TRANSPORTATION

APPROVED

11/30/94 — DATE

/S/ Rory L. Rhinesmith — CHIEF ROADWAY DEVELOPMENT ENGINEER

FHWA

6

S.D.D. 8 F 2-1

6

S.D.D. 8 F 2-1

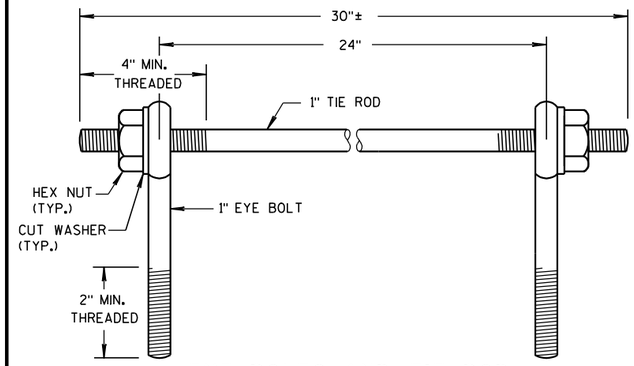

EYE BOLTS AND TIE ROD

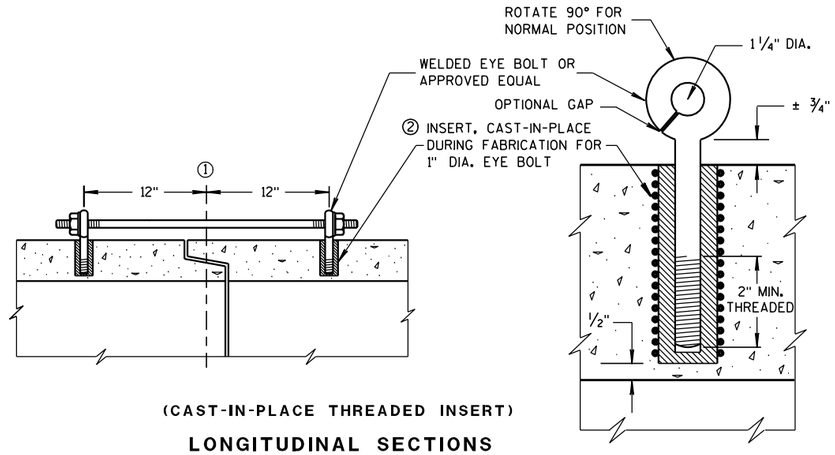

(CAST-IN-PLACE THREADED INSERT)

LONGITUDINAL SECTIONS

EYE BOLT AND TIE ROD ASSEMBLY (ALTERNATE NO. 1)

GENERAL NOTES

DETAILS OF CONSTRUCTION, MATERIALS, AND WORKMANSHIP NOT SHOWN ON THIS DRAWING SHALL CONFORM TO THE PERTINENT REQUIREMENTS OF THE STANDARD SPECIFICATIONS AND APPLICABLE SPECIAL PROVISIONS.

CONCRETE CULVERT AND STORM SEWER PIPE SHALL BE TIED TOGETHER IN THE MANNER ILLUSTRATED BY THIS DETAIL AT LOCATIONS DESIGNATED IN THE STANDARD SPECIFICATIONS AND THE PLAN. THE CONTRACTOR MAY USE EITHER ALTERNATE 1, 2 OR 3 FOR DRAINAGE STRUCTURES. ONLY ALTERNATE 1 AND 3 MAY BE USED FOR CATTLE PASSES, UNLESS OTHERWISE STATED IN THE CONTRACT. THE MATERIALS, FABRICATION AND WORK NECESSARY TO TIE THE PIPE BY THIS DETAIL WILL BE CONSIDERED INCIDENTAL TO THE PIPE AND APRON ENDWALLS IF REQUIRED.

DETAILED DRAWINGS FOR PROPOSED ALTERNATE DESIGNS FOR JOINT TIES SHALL BE SUBMITTED TO THE ENGINEER FOR APPROVAL.

JOINT TIES TO BE HOT-DIP GALVANIZED PER ASTM A 153.

① ℄ OF TONGUE AND GROOVE OR BELL AND SPIGOT JOINTS.

② THE INSIDE OF THE THREADED INSERTS SHALL BE CLEAN TO ALLOW THE INSERTION OF THREADED EYE BOLTS.

③ HOLES SHALL BE CAST-IN-PLACE OR DRILLED 12 INCHES FROM ℄ OF TONGUE AND GROOVE.

④ BOLT PROJECTION INSIDE OF PIPE SHALL NOT EXCEED 2 INCHES.

⑤ OPENING TO BE ROD DIAMETER PLUS 1 INCH.

⑥ LENGTH ADEQUATE TO EXTEND TO WITHIN 1/2 INCH OF THE INNER SURFACE OF THE PIPE.

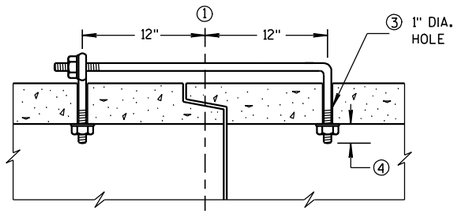

(TONGUE & GROOVE PIPE)

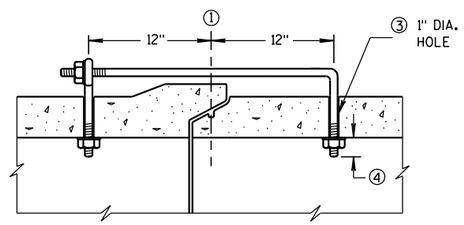

(MODIFIED BELL PIPE)

LONGITUDINAL SECTION

EYE BOLT DIMENSION TABLE

PIPE SIZE	L = LENGTH	
	TONGUE & GROOVE PIPE	MODIFIED BELL PIPE
18" TO 24"	4 1/2"	6 1/4"
30"	5"	7"
36"	5 1/2"	7"
42"	6"	
48"	6 1/2"	
60"	7 1/2"	
66"	8"	

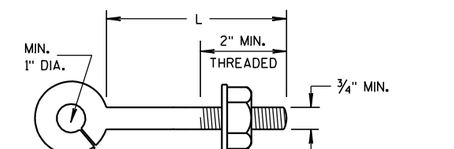

NOTE:

EYE BOLT

NOTE: TWO EYE BOLTS MAY BE USED WITH A 30" LONG THREADED ROD IN LIEU OF THE 90° BENT TIE ROD.

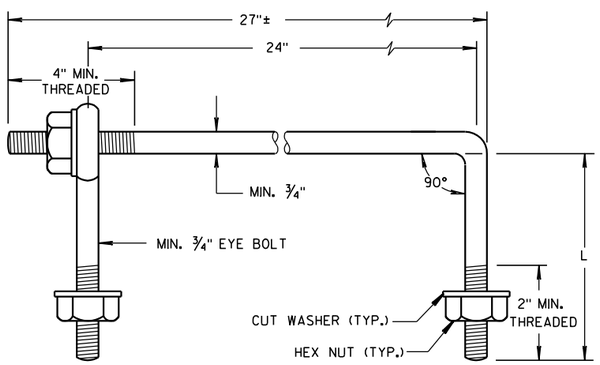

EYE BOLT AND TIE ROD

(JOINT TIES FOR 18" TO 66" DIA. CONCRETE PIPE)

EYE BOLT AND TIE ROD ASSEMBLY (ALTERNATE NO. 2)

ADJUSTABLE TIE ROD TABLE

PIPE DIAMETER	TIE ROD DIAMETER	D	L_1	N
12-60	5/8	5/8	5	1/2
66-84	3/4	3/4	5	1/2
90-108	1	1	7	1 1/16

DIMENSIONS SHOWN ARE IN INCHES

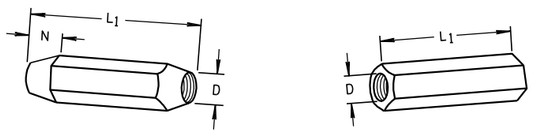

TAPERED PLAIN

RIGHT AND LEFT THREADS

SLEEVE NUTS

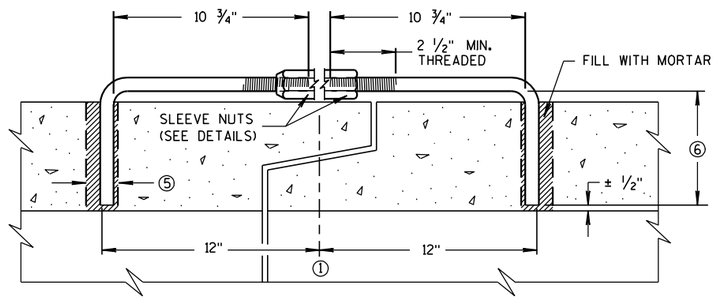

LONGITUDINAL SECTION

(JOINT TIES FOR 12" TO 108" DIA. CONCRETE PIPE)

ADJUSTABLE TIE ROD (ALTERNATE NO. 3)

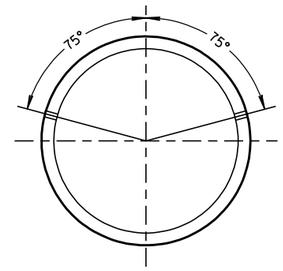

PLACEMENT OF (2) CAST-IN-PLACE INSERTS OR HOLES DURING FABRICATION FOR PIPE SECTIONS REQUIRING TIE RODS

TRANSVERSE SECTION

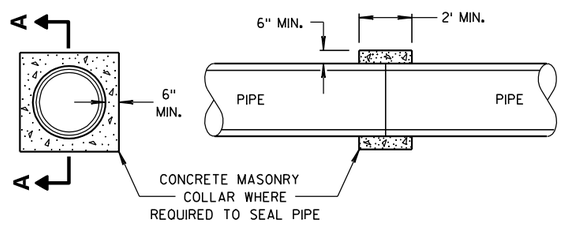

SECTION A-A

CONCRETE COLLAR DETAIL

JOINT TIES FOR CONCRETE PIPE AND CONCRETE COLLAR DETAIL

STATE OF WISCONSIN
DEPARTMENT OF TRANSPORTATION

APPROVED
6/5/2012 — DATE
/S/ Jerry H. Zogg — ROADWAY STANDARDS ENGINEER

FHWA

6

S.D.D. 8 F 4-7

6

S.D.D. 8 F 4-7

GENERAL NOTES

1. WOOD OR STEEL POSTS (w6X9 OR w6X8.5) MAY BE USED. DO NOT INTERMIX WOOD AND STEEL POSTS. INSTALL STEEL POSTS WITH HOLES ON APPROACHING TRAFFIC SIDE.

2. USE WOOD OR APPROVED PLASTIC BLOCKOUTS. WOOD BLOCKOUTS MAY BE CONSTRUCTED OUT OF TWO OR MORE WOOD BLOCKOUTS. SEE ALTERNATE WOOD BLOCKOUT DETAIL. DIMENSIONS OF APPROVED PLASTIC BLOCKOUTS MAY VARY.

3. IF ROCK IS ENCOUNTERED DURING EXCAVATION, PROVIDE A HOLE 12 INCHES IN DIAMETER EXTENDING 20 INCHES DEEP INTO THE ROCK. PLACE APPROXIMATELY 2½INCHES OF GRANULAR MATERIAL IN THE BOTTOM OF THE HOLE. CUT THE POSTS THE TO LENGTH AMD INSTALL. BACKFILL WITH EXCAVATED MATERIAL AND COMPACT. BACKFILL IS TO BE FREE OF LARGE ROCKS.

4. WHEN THE DISTANCE FROM BACK OF POST TO SHOULDER HINGE POINT IS LESS THAN 2 FEET INSTALL LONGER POST AT HALF POST SPACING (K).

5. FOR NEW MGS INSTALLATION TOP OF W-BEAM RAIL TOLERANCE IS ± 1". FOR EXISTING MGS INSTALLATION TOP OF W-BEAM IS BETWEEN 27¾" TO 32".

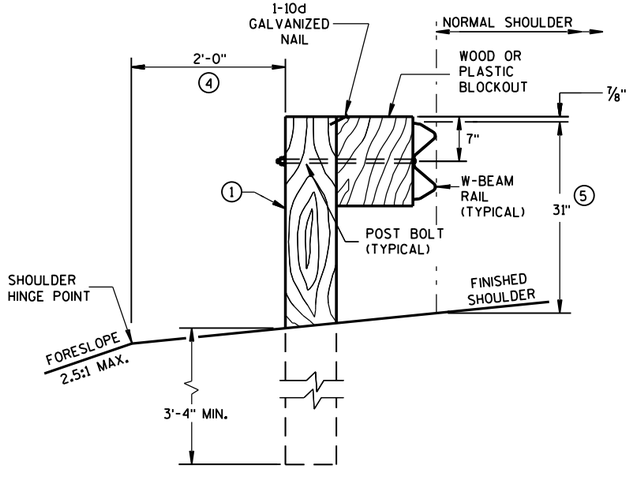

END VIEW

LOCATED ALONG A ROADWAY SHOULDER
STANDARD INSTALLATION

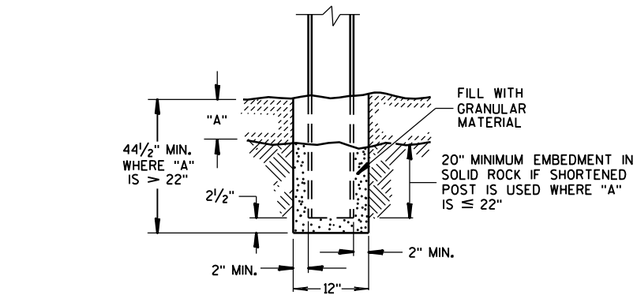

END VIEW

SETTING STEEL OR WOOD POST IN ROCK ③

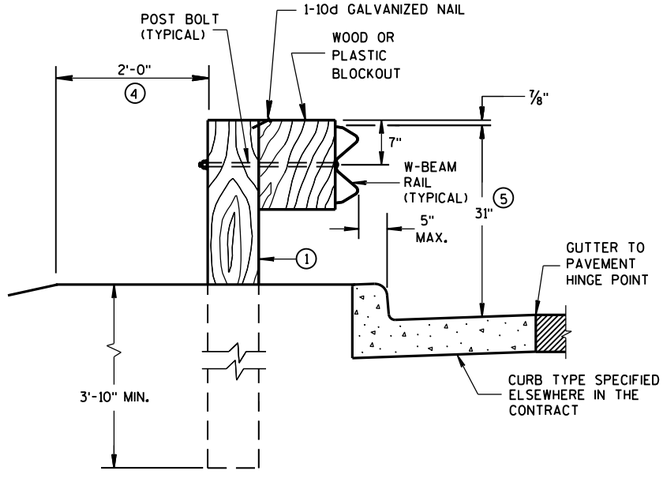

END VIEW

LOCATED ALONG A CURBED ROADWAY

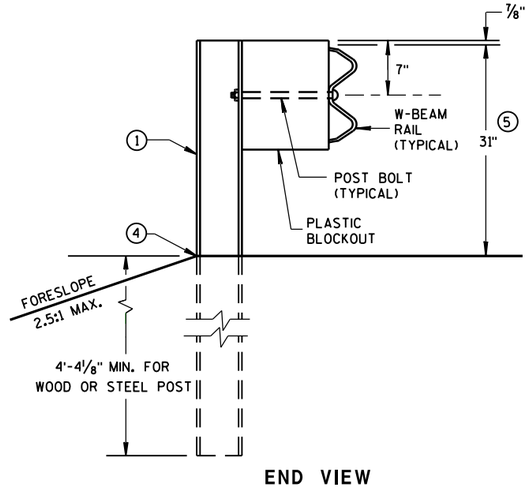

END VIEW

MGS LONGER POST AT HALFPOST SPACING W BEAM (K)

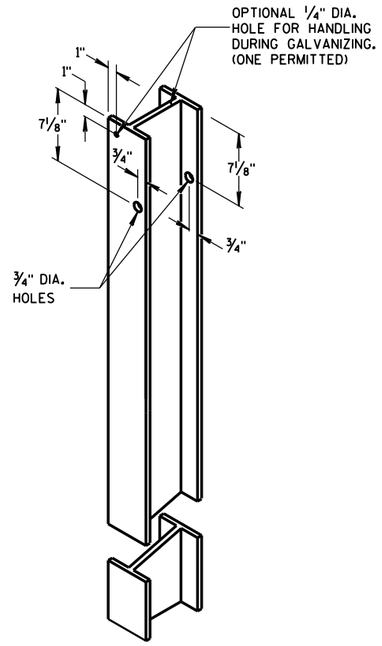

STEEL POST &
HOLE PUNCHING DETAIL
(w6X9) ①

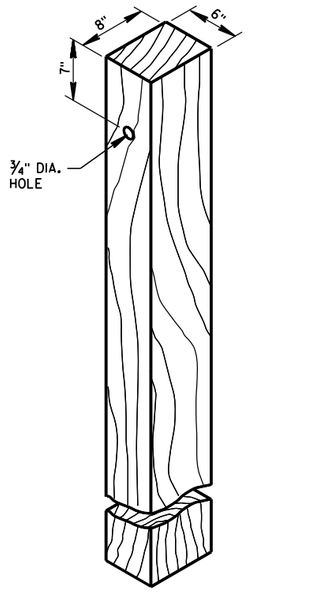

WOOD POST
(6" X 8") NOMINAL ①

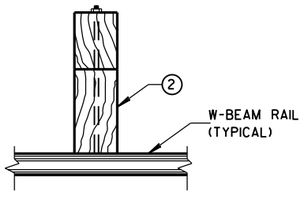

PLAN VIEW
WOOD POST,
BLOCKOUT & BEAM

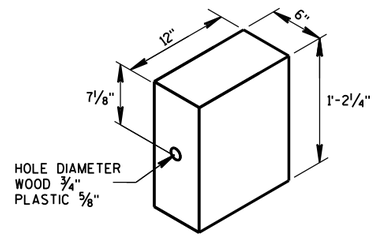

WOOD OR
PLASTIC BLOCKOUT ②

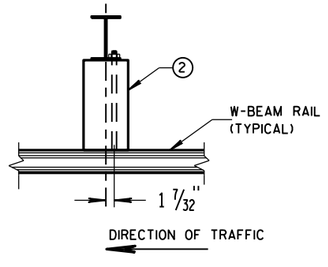

PLAN VIEW
STEEL POST,
PLASTIC BLOCKOUT & BEAM

MIDWEST GUARDRAIL SYSTEM
(MGS) GUARDRAIL

STATE OF WISCONSIN
DEPARTMENT OF TRANSPOI

6
S.D.D. 14 B 42-2a

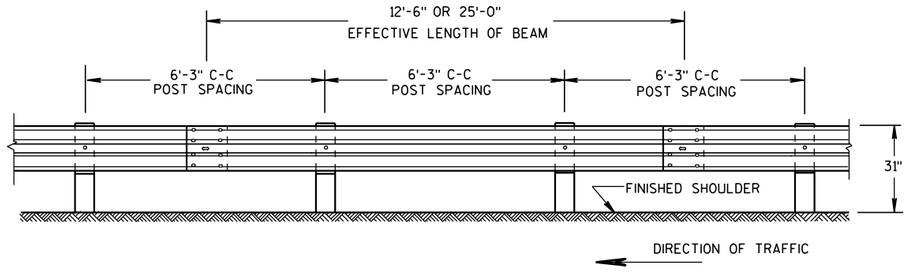

FRONT VIEW

POST SPACING STANDARD INSTALLATION

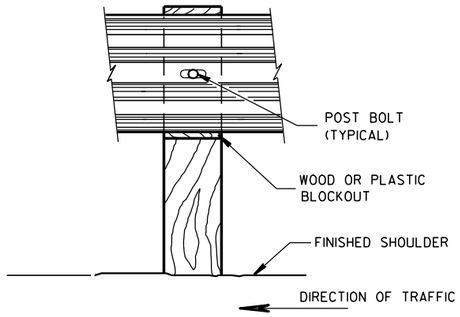

FRONT VIEW AT WOOD POST

GENERAL NOTES

1. PROVIDE TYPE "H" SILVER REFLECTIVE SHEETING ON ALL REFLECTORS EXCEPT THOSE LOCATED ALONG THE LEFT EDGE OF ONE-WAY ROADWAYS, WHICH SHALL BE PROVIDED WITH TYPE "H" YELLOW REFLECTIVE SHEETING.
2. DO NOT INSTALL REFLECTORS ON THE FIRST 50 FEET OF THE APPROACH END OF THE ENERGY ABSORBING TERMINAL. RAIL SPLICE LOCATIONS ARE THE ONLY ACCEPTABLE LOCATIONS FOR REFLECTORS.
3. REVERSE EVERY OTHER REFLECTOR FOR 2-WAY VISIBILITY. THE CONTRACTOR MAY FURNISH TWO-SIDED REFLECTORS IN LIEU OF ONE-SIDED REFLECTORS.
4. PROVIDE AN ANGLE OF BEND OF 90° ± 1° FOR TWO-SIDED REFLECTORS.
5. 25 FEET OF HALF POST SPACING IS REQUIRED ON APPROACH AND DEPARTURE ENDS OF QUARTER POST SPACING.

POST BOLTS ARE A 5/8" DIAMETER ASTM A307 GUARDRAIL BOLT. A POST BOLT REQUIRES 5/8" DIAMETER A563A DOUBLE RECESSED (DR) HEAVY HEX NUT AND 5/8" DIAMETER F844 FLAT WASHER. POST BOLTS MAY BE LONGER IF MULTIPLE BLOCKOUTS ARE BEING USED.

GUARD RAIL SPLICE BOLTS ARE A 5/8" DIAMETER ASTM A307 GUARDRAIL HEAD BOLT. A GUARDRAIL SPLICE BOLT REQUIRES 5/8" DIAMETER A563A DOUBLE RECESSED (DR) HEAVY HEX NUT.

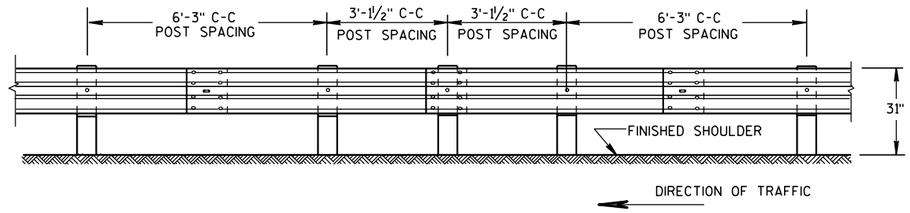

FRONT VIEW

HALF POST SPACING (HS) AND HALF POST SPACING WITH LONGER POSTS (K)

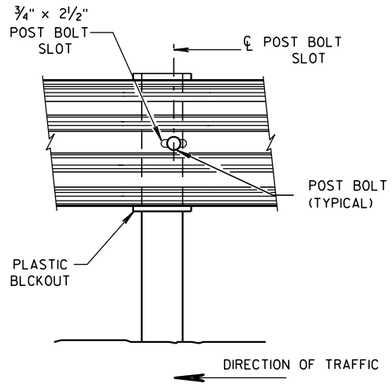

FRONT VIEW AT STEEL POST

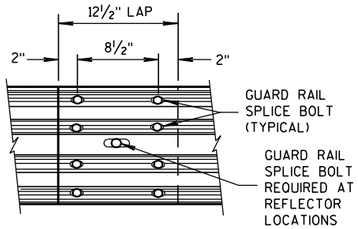

FRONT VIEW

MID-SPAN BEAM SPLICE

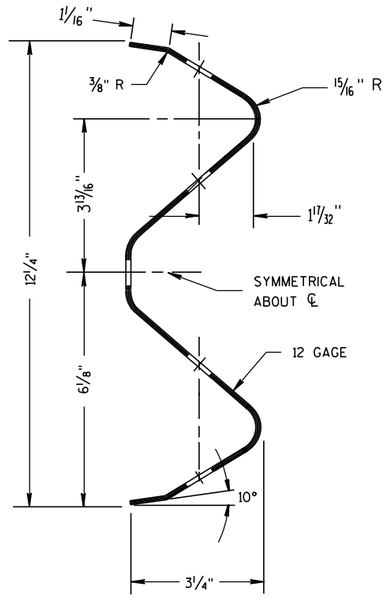

SECTION THRU W-BEAM RAIL

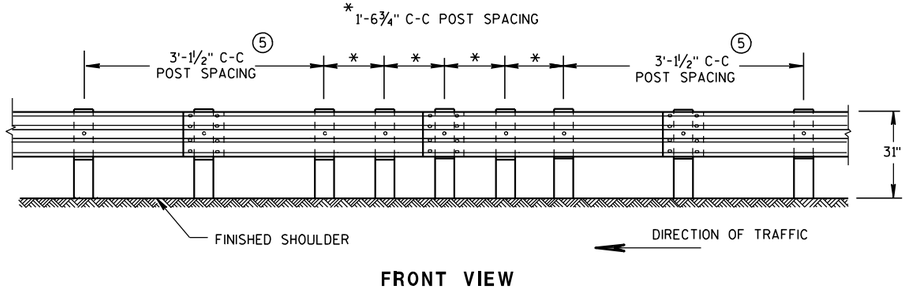

FRONT VIEW

QUARTER POST SPACING (QS)

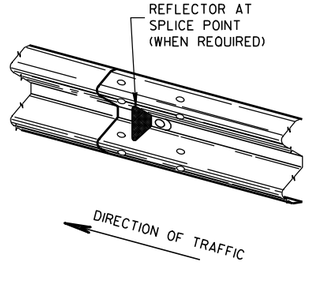

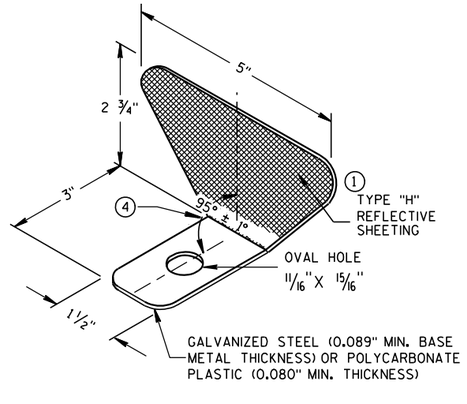

ONE SIDED REFLECTOR DETAIL AND TYPICAL INSTALLATION (1)

REFLECTOR SPACING (2)

	BEAM GUARD LENGTH	REFLECTOR SPACING	NO. SURFACES REFLECTORIZED	MIN. NO. REFLECTORS
ONE WAY TRAFFIC	< 200' > 200'	50' C-C 100' C-C	1 1	3
TWO WAY TRAFFIC	< 200' > 200'	25' C-C 50' C-C	1 1 (3)	6
TWO WAY TRAFFIC	< 200' > 200'	50' C-C 100' C-C	2 2 (4)	3

MIDWEST GUARDRAIL SYSTEM
(MGS) GUARDRAIL

STATE OF WISCONSIN
DEPARTMENT OF TRANSPORTATION

6

S.D.D. 14 B 42-2b

6

S.D.D. 14 B 42-2b

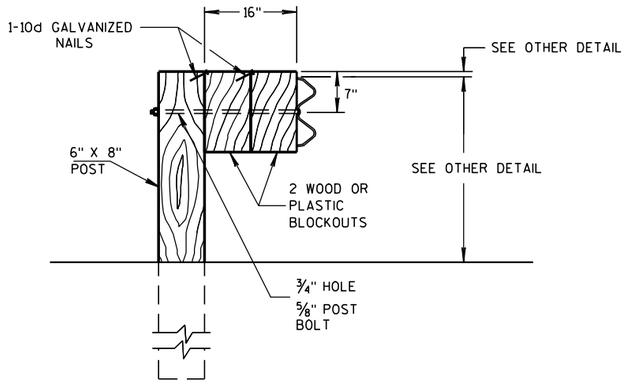

DETAIL FOR 16" BLOCKOUT DEPTH

IT IS ACCEPTABLE TO USE BLOCKOUTS UP TO 16" DEEP TO INCREASE THE POST OFFSET TO AVOID UNDERGROUND OBSTACLES. THERE IS NO LIMIT TO THE NUMBER OF POSTS THAT CAN HAVE ADDITIONAL BLOCKOUTS UP TO 16" DEEP.

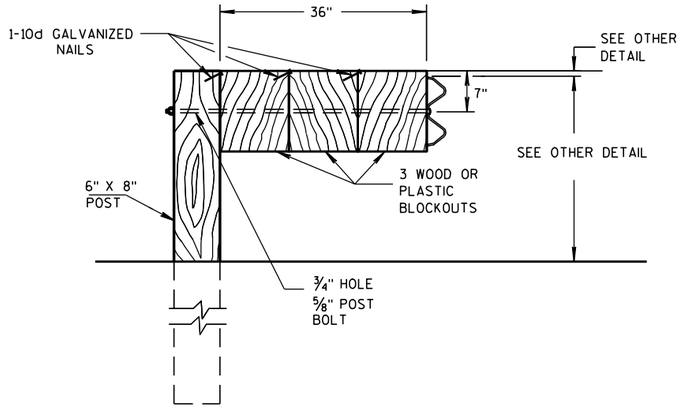

DETAIL FOR 36" BLOCKOUT DEPTH

NOTES: UNDER SPECIAL CIRCUMSTANCES, SUCH AS AVOIDING OBSTACLES THAT ARE NOT RELOCATED, IT IS ACCEPTABLE TO INSTALL ADDITIONAL BLOCKOUTS TO OBTAIN UP TO 36" DEPTH FOR ONE OR TWO POSTS IN A SECTION OF GUARDRAIL.

DO NOT USE 16" OR 36" BLOCKOUTS IF IT CAUSES THE POST TO BE DRIVEN BEYOND SHOULDER HINGE POINT OR CAUSES A FIXED OBJECT TO BE WITHIN THE DEFLECTION DISTANCE OF THE BARRIER.

NOTE: 1. ALL FILLETS SHALL HAVE A MINIMUM RADIUS OF 1/16".
2. IF THE BOLT EXTENDS MORE THAN 1/4" FROM THE NUT THE BOLT SHOULD BE TRIMMED BACK.

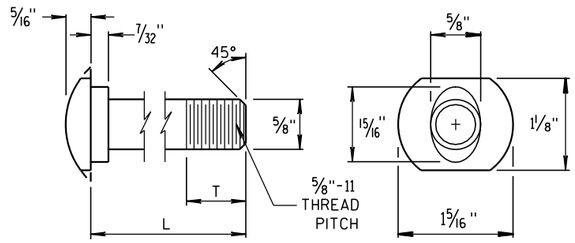

POST BOLT TABLE

L	T (MIN.)
1 1/4"	1 1/8"
2"	1 3/4"
10"	4"
14"	4 1/16"
18"	4"
21"	4 1/16"
25"	4"

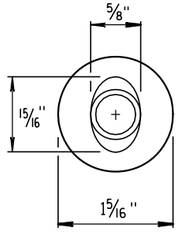

ALTERNATE BOLT HEAD

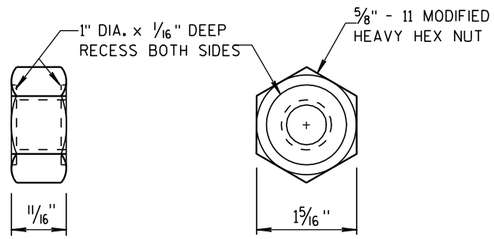

POST BOLT AND RECESS NUT

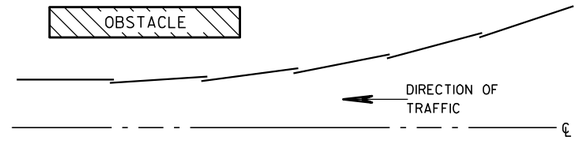

PLAN VIEW

BEAM LAPPING DETAIL

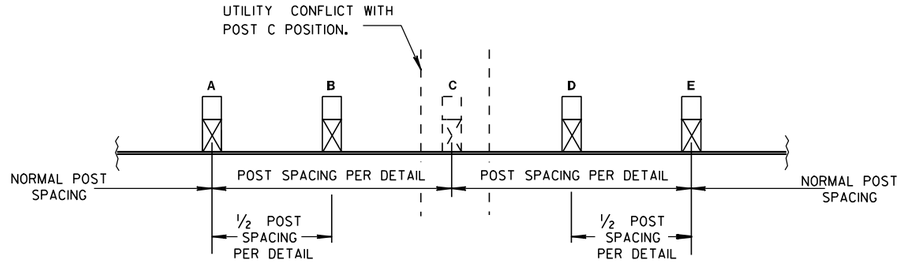

POST DRIVING FOR CONTINUOUS UNDERGROUND OBSTRUCTION

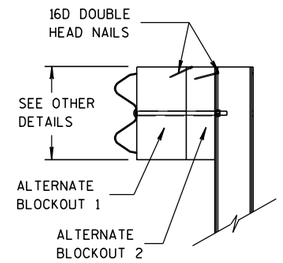

SIDE VIEW

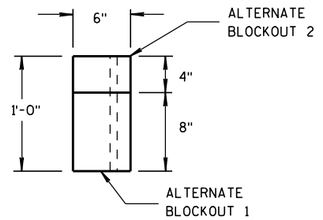

TOP VIEW

ALTERNATE WOOD BLOCKOUT DETAIL

6

S.D.D. 14 B 42-2c

MIDWEST GUARDRAIL SYSTEM (MGS) GUARDRAIL

STATE OF WISCONSIN
DEPARTMENT OF TRANSPORTATION

APPROVED

11/15/2011
DATE

/S/ Jerry H. [illegible]
ROADWAY STANDARDS ENGINEER

FHWA

ENT

6

S.D.D. 14 B 42-2c

GENERAL NOTES

POSTS 1 THROUGH 3 ARE CRT POSTS.
ALL OTHER POSTS SHALL BE WOOD OR STEEL.

SEE SDD 14 B 42 FOR MORE DETAILS.

(A) FLARE FOR MGS EAT SHOWN. IF INSTALLING MGS NO FLARE NEEDED.

(B) VALUES SHOWN ON DRAWING REPRESENT THE MAXIMUM LENGTH. SHORTER DIMENSIONS ARE POSSIBLE. SEE OTHER SECTION OF PLAN FOR MORE INFORMATION.

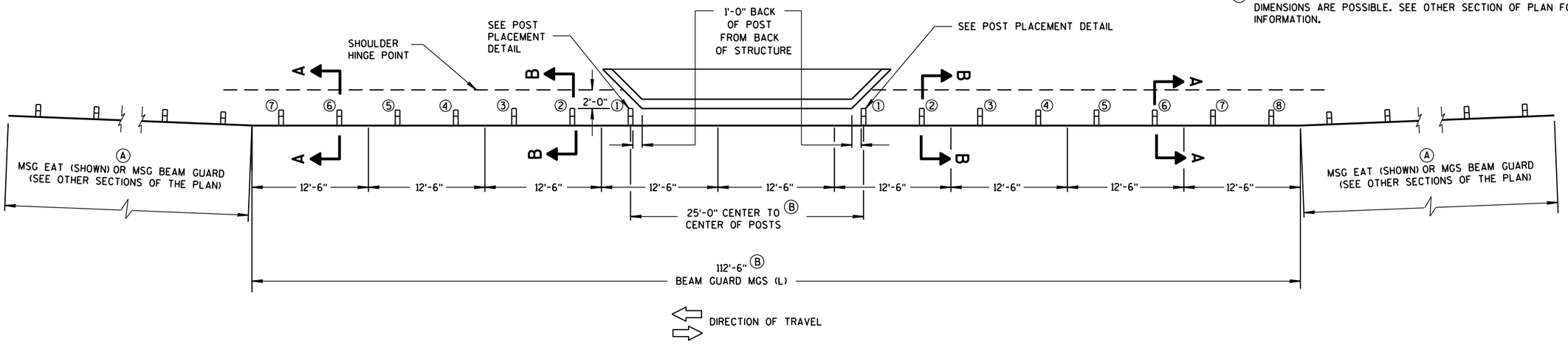

PLAN VIEW

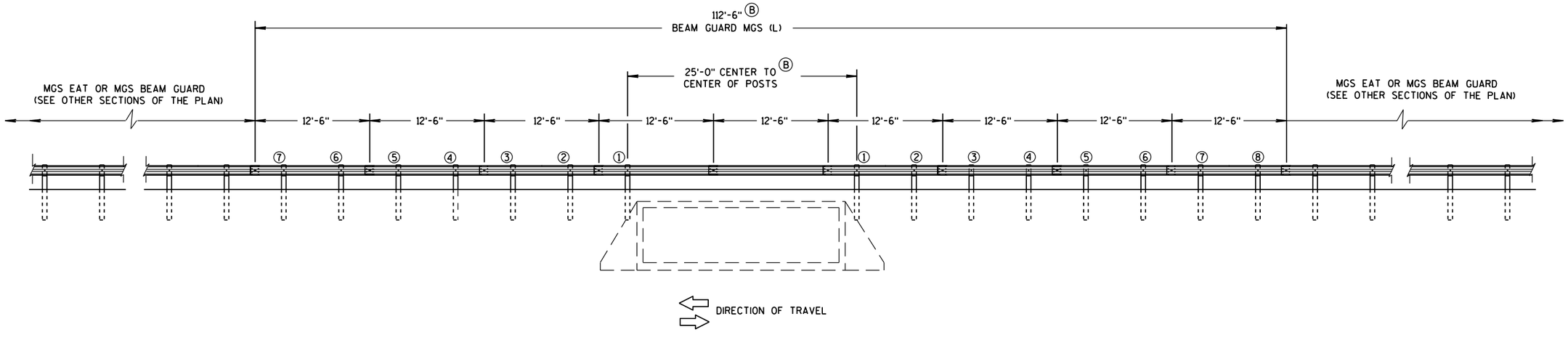

ELEVATION VIEW

MIDWEST GUARDRAIL SYSTEM LONG SPAN MGS (L) TWO-WAY TRAFFIC

MIDWEST GUARDRAIL SYSTEM LONG SPAN MGS (L)
STATE OF WISCONSIN DEPARTMENT OF TRANSPOI

6

S.D.D. 14 B 43-3a

GENERAL NOTES

POSTS 1 THROUGH 3 ARE CRT POSTS.
ALL OTHER POSTS SHALL BE WOOD OR STEEL.

SEE SDD 14 B 42 FOR MORE DETAILS.

(A) FLARE FOR MGS EAT SHOWN. IF INSTALLING MGS NO FLARE NEEDED.

(B) VALUES SHOWN ON DRAWING REPRESENT THE MAXIMUM LENGTH. SHORTER DIMENSIONS ARE POSSIBLE. SEE OTHER SECTION OF PLAN FOR MORE INFORMATION.

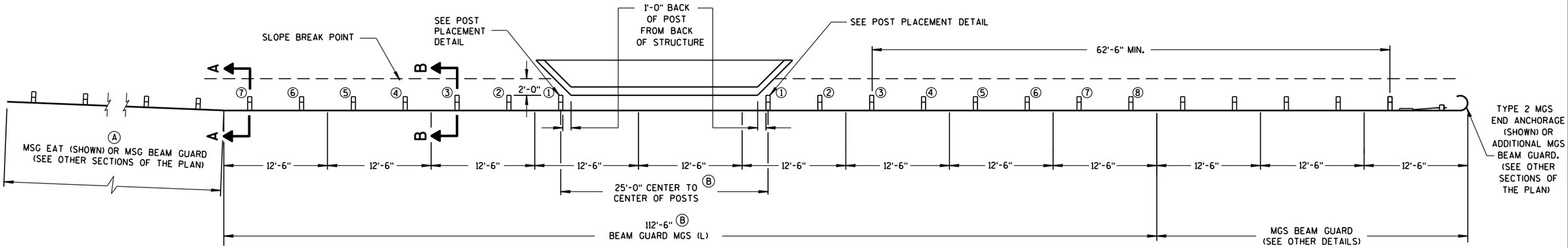

PLAN VIEW

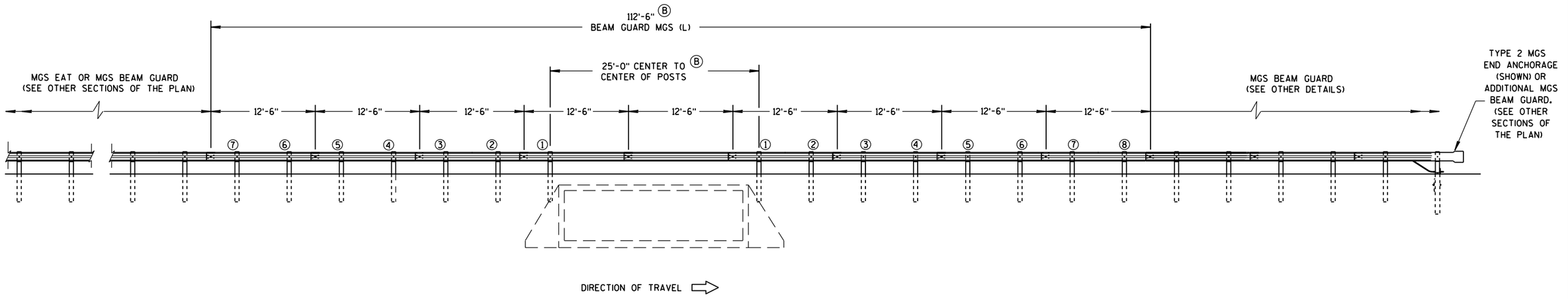

ELEVATION VIEW

MIDWEST GUARDRAIL SYSTEM LONG SPAN MGS (L) ONE-WAY TRAFFIC

MIDWEST GUARDRAIL SYSTEM
LONG SPAN MGS (L)

STATE OF WISCONSIN
DEPARTMENT OF TRANSPOI

6

S.D.D. 14 B 43-3b

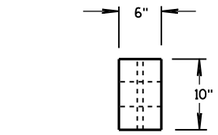

PLAN VIEW

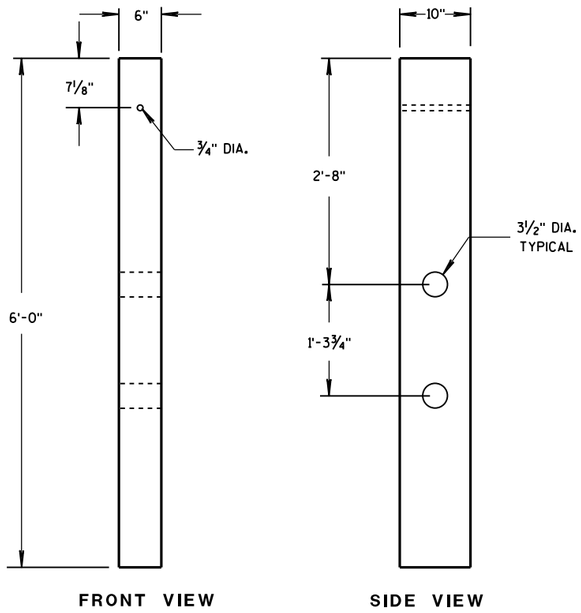

FRONT VIEW SIDE VIEW

CRT WOOD POST

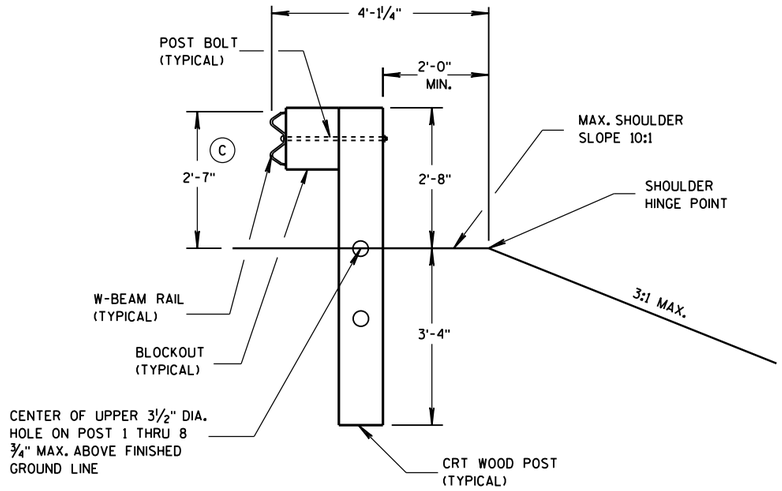

SECTION B-B

POSTS NO. 1-3

SEE OTHER DETAILS

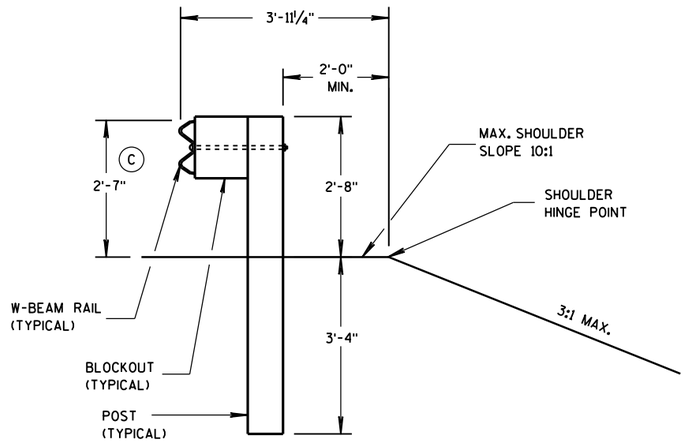

SECTION A-A

POSTS NO. 4-8

SEE OTHER DETAILS

GENERAL NOTES

(C) TOLERANCE FOR TOP OF W-BEAM RAIL IS ± 1".

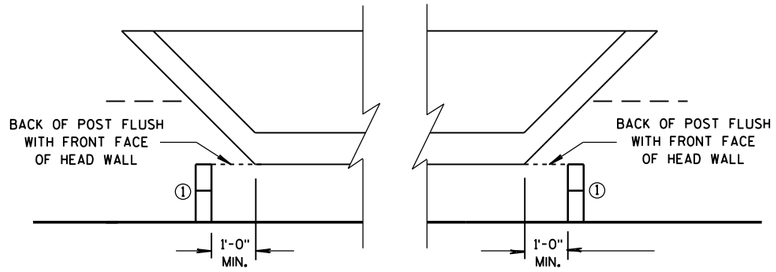

POST PLACEMENT DETAIL

MIDWEST GUARDRAIL SYSTEM
LONG SPAN MGS (L)

STATE OF WISCONSIN
DEPARTMENT OF TRANSPORTATION

APPROVED

5/10/2013
DATE

/S/ Jerry H. Zogg
ROADWAY STANDARDS ENGINEER

FHWA

6

S.D.D. 14 B 43-3c

GENERAL NOTES

(A) THE SLOPE IN THE AREA BOUNDED BY THE EXTENDED VEHICLE RUNOUT PATH (EVRP), THE HINGE POINT LINE (HPL),AND THE CLEAR ZONE LIMITS (CZL) SHALL BE 4:1 OR FLATTER.

(B) AFTER FINAL ASSEMBLY, RECHECK CABLE TO BE SURE IT IS TAUT AND HAS NOT RELAXED.

(C) DIFFERENT MANUFACTURES REQUIRE DIFFERENT PERFORATED W-BEAM RAIL END PANELS. SEE MANUFACTURES INFORMATION.

(D) THE TOP OF THE STEEL TUBE ON POST 1 AND POST 2 SHALL NOT BE MORE THAN 3" ABOVE THE FINISH GROUND ELEVATION.

(F) SHEETING IS ATTACHED TO 0.040 ALUMINUM SHEET AND ATTACHED TO E.A.T. HEAD USING 4 STAINLESS STEEL SELF-TAPPING SCREWS. ONE SCREW PER CORNER OF E.A.T.

(G) ½" DIAMETER X 3" LONG LAG BOLT AND WASHER.

(H) HARDWARE VARIES BETWEEN DIFFERENT MANUFACTURES. SEE MANUFACTURE'S DRAWING FOR INFORMATION.

(I) DIMENSIONS MAY VARY. SEE MANUFACTURE'S INFORMATION.

SEE SDD 14B42 FOR MORE INFORMATION.

* DO NOT ATTACH BLOCKOUTS TO POSTS 1 AND 2.

DO NOT INSTALL REFLECTORS ON THE FIRST 50 FEET OF THE APPROACH END OF THE ENERGY ABSORBING TERMINAL.

W-BEAM RAIL SPLICES ARE LOCATED AT POST NUMBER 3, AND BETWEEN POST 5 AND 6, BETWEEN POSTS 7 AND 8, AND MIDDLE OF THE SPAN AFTER POST 9.

PATTERN AND COLORS ON REFLECTIVE SHEETING TYPE H ARE TO CONFORM TO OM3-L OR OM3-R OF THE MANUAL ON UNIFORM TRAFFIC CONTROL DEVICES.

THE CENTER OF THE UPPER 3½" DIAMETER HOLE ON POST NUMBER 3 THROUGH POST 9 IS TO BE FLUSH WITH THE GROUND LINE (± ¾")

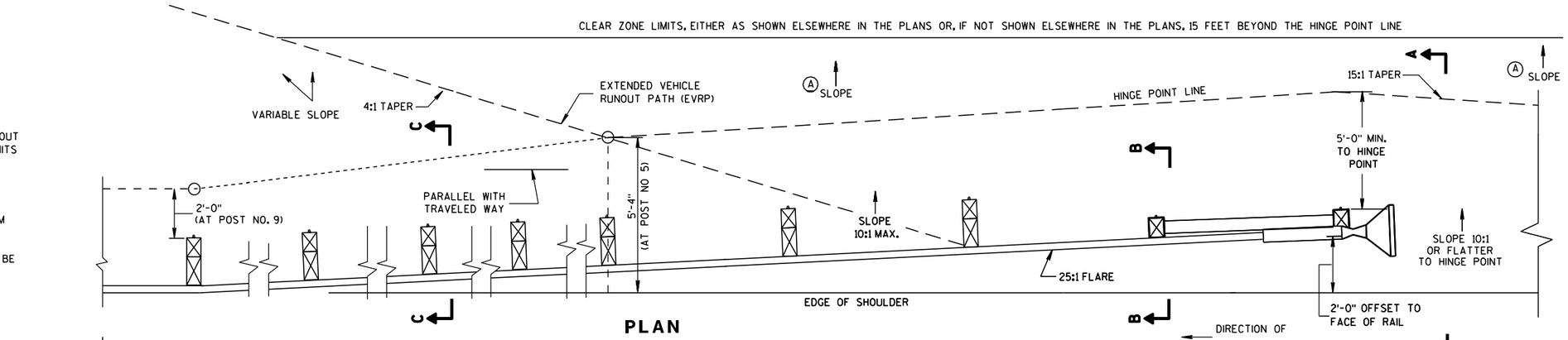

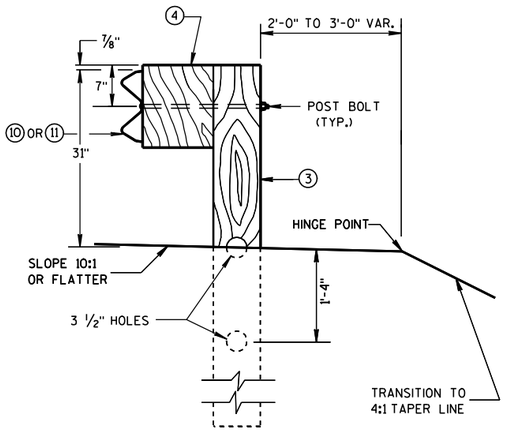

SECTION C-C
TYPICAL AT POST NOS. 3-9

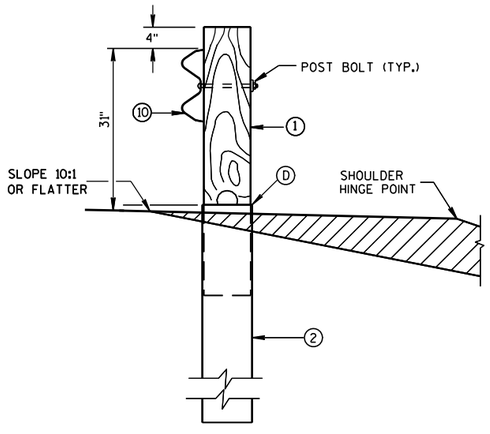

SECTION B-B
TYPICAL AT POST NO. 2*

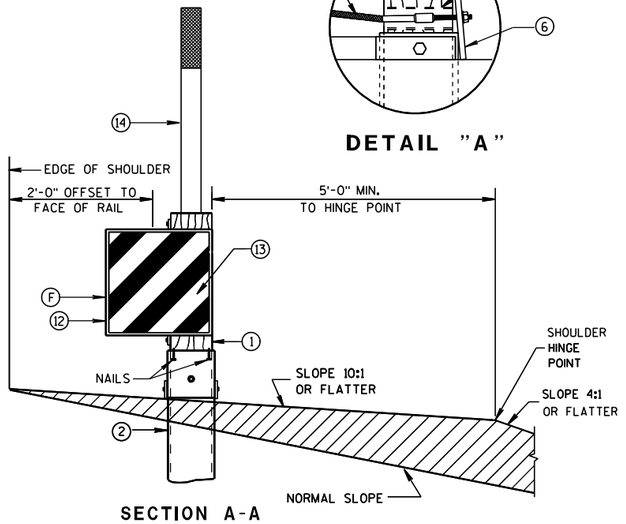

SECTION A-A
TYPICAL AT POST NO. 1*

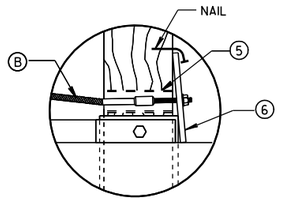

DETAIL "A"

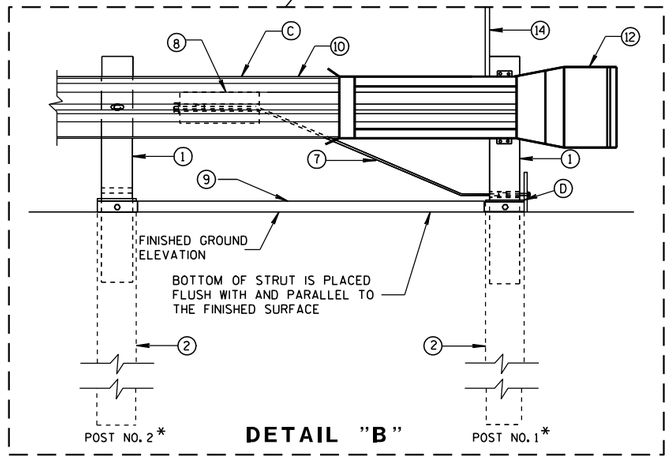

DETAIL "B"

MIDWEST GUARDRAIL SYSTEM
ENERGY ABSORBING TERMINAL (MGS)

STATE OF WISCONSIN
DEPARTMENT OF TRANSPORTATION

6
S.D.D. 14 B 44-1a

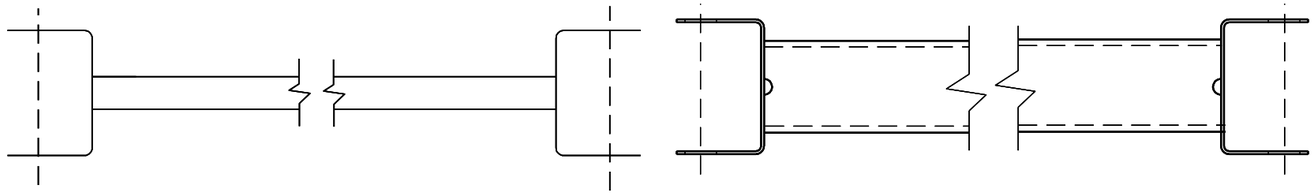

GENERIC GROUND STRUT (9) (H)

BILL OF MATERIALS

PART NO.	DESCRIPTION MATERIALS PROVIDED BY MGS EAT MANUFACTURER. SEE MANUFACTURER'S DETAILS FOR MORE INFORMATION.
(1)	WOOD BREAKAWAY POST
(2)	6" X 8" X 0.188", 6'-0" LONG FOUNDATION TUBE AT POSTS 1 AND 2
(3)	WOOD CRT
(4)	WOOD BLOCKOUT
(5)	PIPE SLEEVE
(6)	BEARING PLATE
(7)	BCT CABLE ASSEMBLY
(8)	ANCHOR CABLE BOX
(9)	GROUND STRUT
(10)	PERFORATED W-BEAM RAIL END PANEL, 12'-6" LONG.
(11)	STANDARD W-BEAM RAIL. MULTIPLE SECTIONS REQUIRED. SECTIONS VARY IN LENGTH.
(12)	END SECTION EAT
(13)	0.040" ALUMINUM SHEET WITH REFLECTIVE SHEETING TYPE H (ONLY THE SHEETING IS SUPPLIED BY THE MANUFACTURER)
(14)	EAT MARKER POST - YELLOW (SEE APPROVED PRODUCTS LIST)

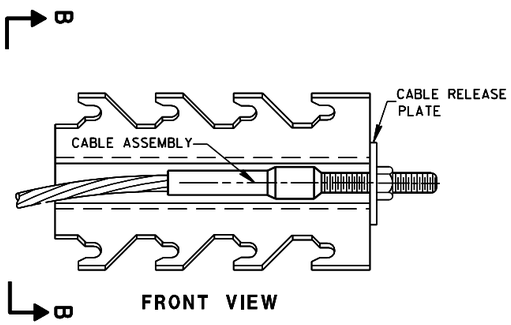

FRONT VIEW

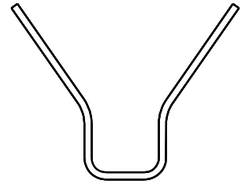

SECTION B-B

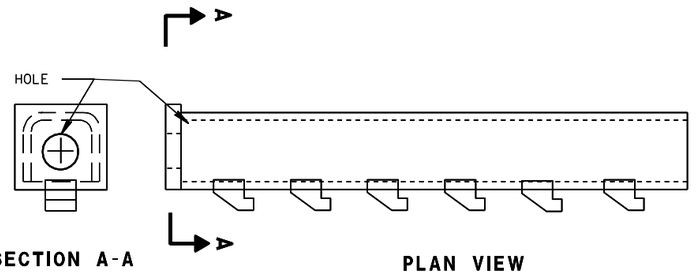

SECTION A-A

PLAN VIEW

GENERIC ANCHOR CABLE BOX (8) (H)

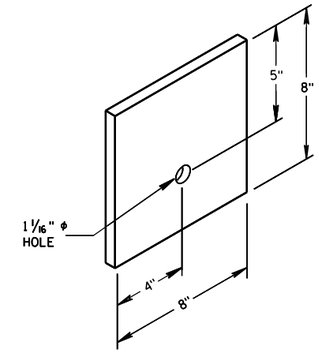

BEARING PLATE (6)

MIDWEST GUARDRAIL SYSTEM
ENERGY ABSORBING TERMINAL
(MGS)

STATE OF WISCONSIN
DEPARTMENT OF TRANSPORTATION

6

S.D.D. 14 B 44-1b

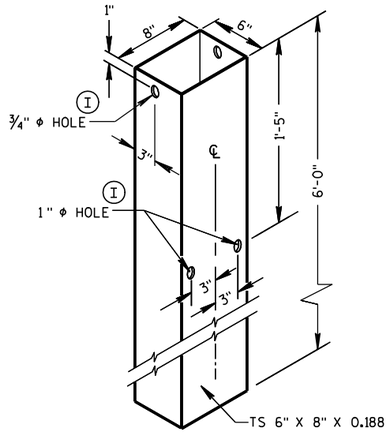

FOUNDATION TUBE (2)

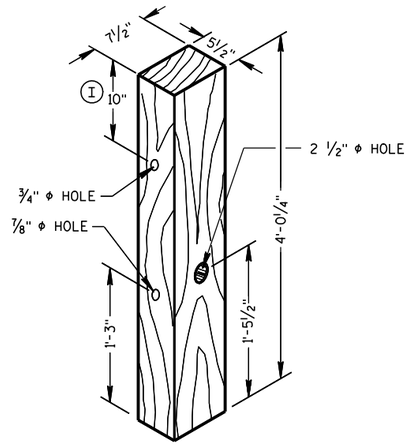

POSTS NUMBER 1 AND 2

WOOD BREAKAWAY POST (1)

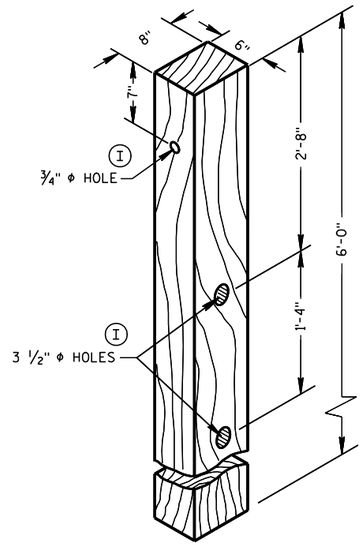

POSTS NUMBER 3-9

WOOD CRT POST (3)

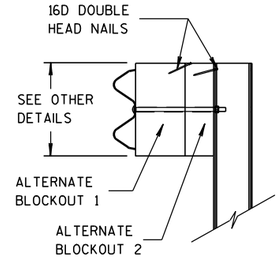

SIDE VIEW

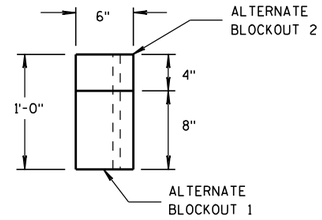

TOP VIEW

ALTERNATE WOOD BLOCKOUT DETAIL

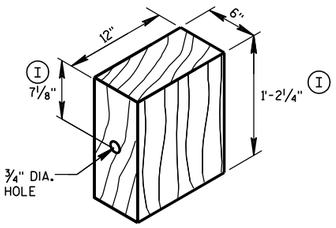

WOOD BLOCKOUT (4)

REQ'D. AT ALL POSTS EXCEPT POST NO'S 1 & 2

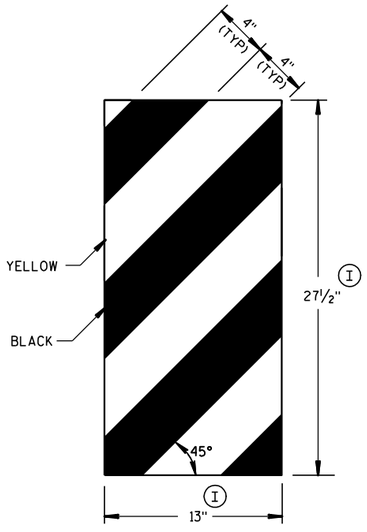

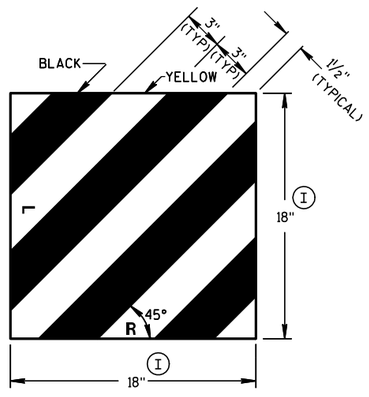

GENERIC REFLECTIVE SHEETING (13) (H)

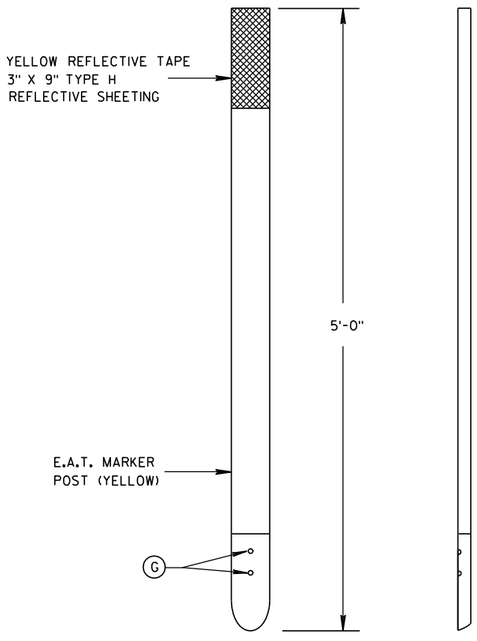

FRONT VIEW

SIDE VIEW

E.A.T. MARKER POST (14)

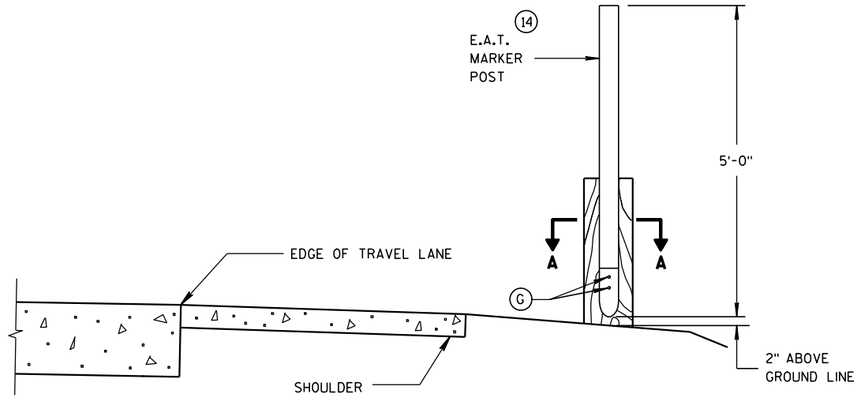

TYPICAL INSTALLATION OF E.A.T. MARKER POST BACKSIDE OF POST NO. 1

(E.A.T. AND RAIL REMOVED FOR CLARITY)

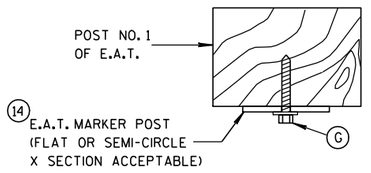

SECTION A-A

MIDWEST GUARDRAIL SYSTEM ENERGY ABSORBING TERMINAL (MGS)

STATE OF WISCONSIN
DEPARTMENT OF TRANSPORTATION

APPROVED

5/23/2011
DATE

/S/ Jerry H. [illegible]
ROADWAY STANDARDS ENGINEER

FHWA

6

S.D.D. 14 B 44-1c

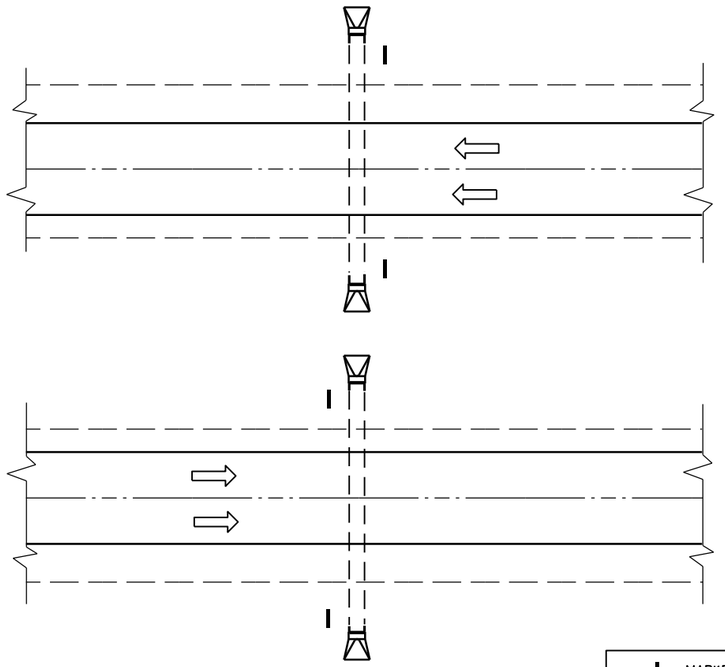

PLAN VIEW

DIVIDED HIGHWAY

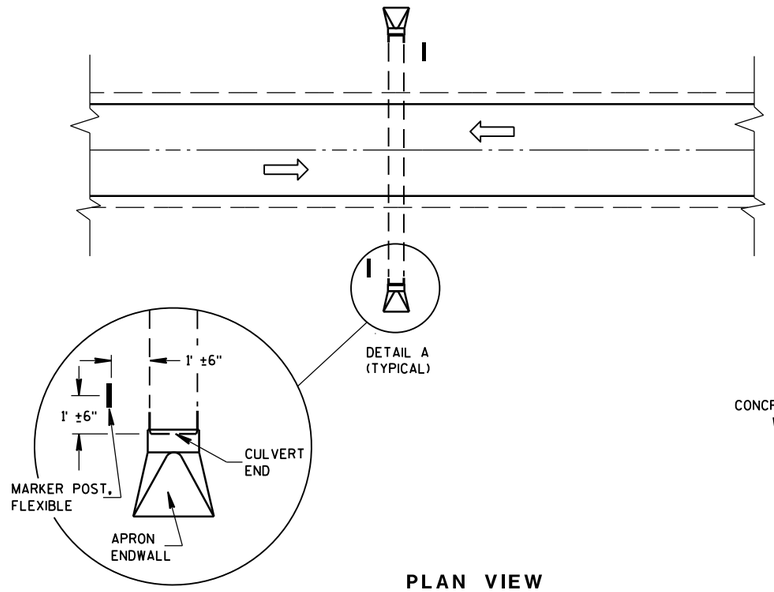

DETAIL A
(TYPICAL)

PLAN VIEW

UNDIVIDED HIGHWAY

MARKER POST, FLEXIBLE

DIRECTION OF TRAFFIC FLOW

GENERAL NOTES

DETAILS OF CONSTRUCTION, MATERIALS AND WORKMANSHIP NOT SHOWN ON THIS DRAWING SHALL CONFORM TO THE PERTINENT REQUIREMENTS OF THE STANDARD SPECIFICATIONS AND THE APPLICABLE SPECIAL PROVISIONS.

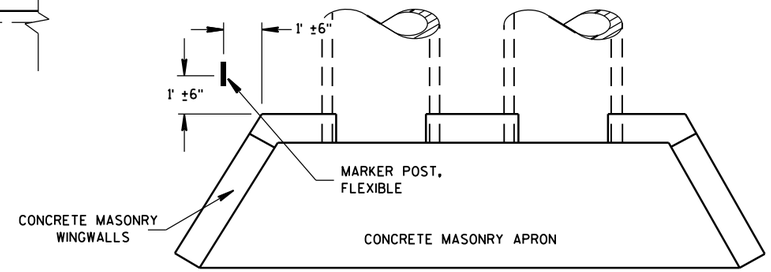

PLAN VIEW

CONCRETE MASONRY ENDWALLS FOR CULVERT PIPE AND PIPE ARCH

FLEXIBLE MARKER POST LOCATION

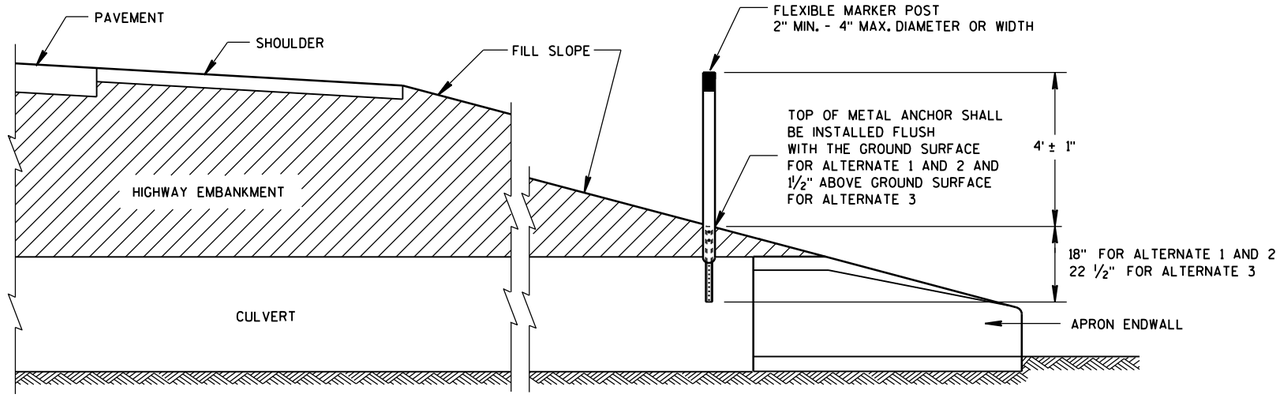

CROSS SECTION

FLEXIBLE MARKER POST

FLEXIBLE MARKER POST FOR CULVERT END

STATE OF WISCONSIN
DEPARTMENT OF TRANSPOI

6

S.D.D. 15 A 3-2a

6

S.D.D. 15 A 3-2a

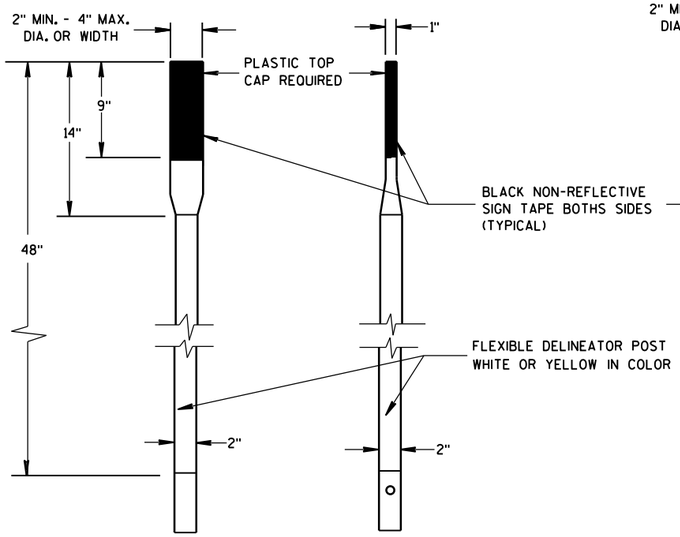

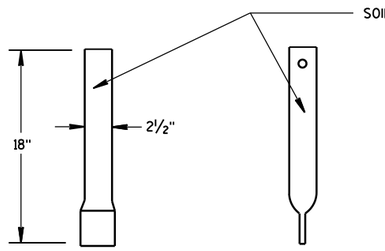

FRONT VIEW SIDE VIEW

ALTERNATE 1

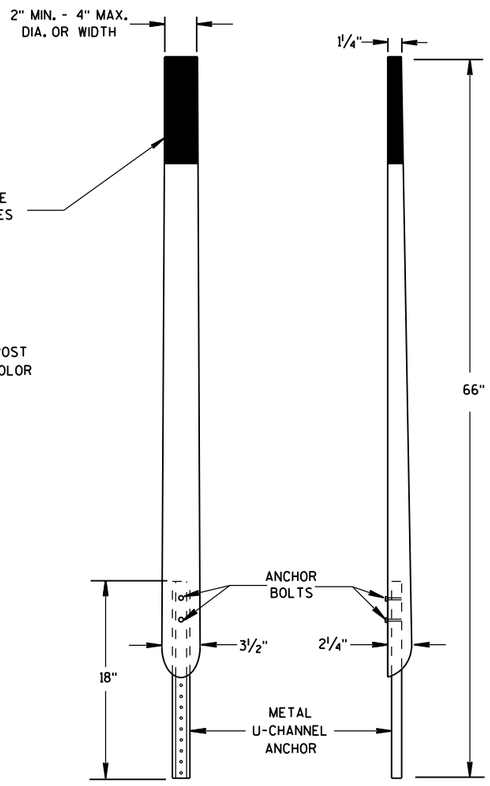

FRONT VIEW SIDE VIEW

ALTERNATE 2

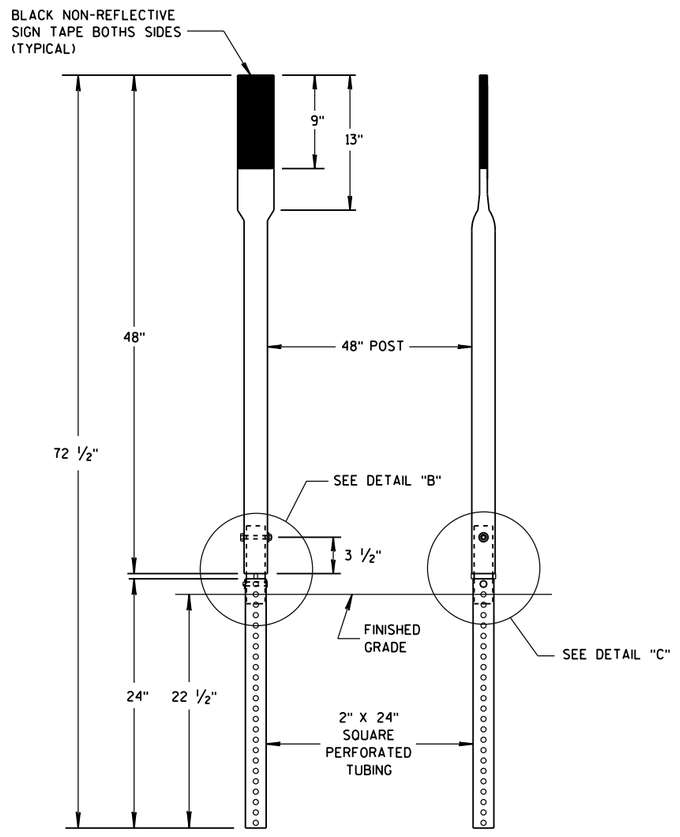

FRONT VIEW SIDE VIEW

ALTERNATE 3

FLEXIBLE MARKER POSTS

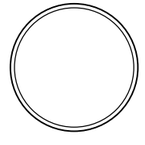

SECTION A-A

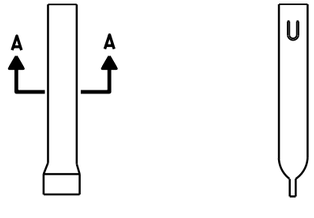

FRONT VIEW SIDE VIEW

ALTERNATE 1

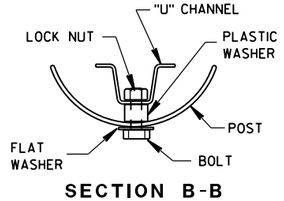

SECTION B-B

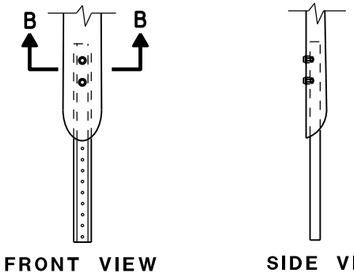

FRONT VIEW SIDE VIEW

ALTERNATE 2

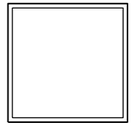

SECTION C-C

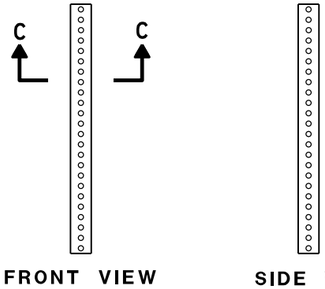

FRONT VIEW SIDE VIEW

ALTERNATE 3

FLEXIBLE MARKER POST ANCHORS

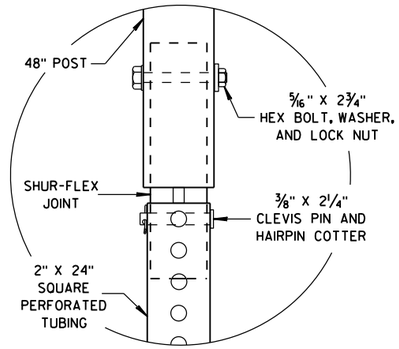

DETAIL B

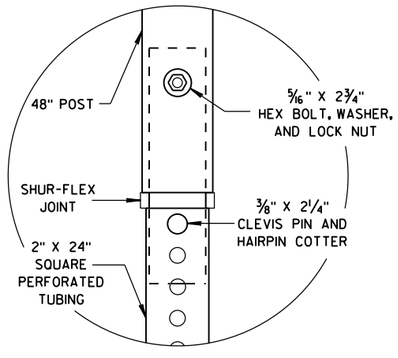

DETAIL C

FLEXIBLE MARKER POST
FOR CULVERT END

STATE OF WISCONSIN
DEPARTMENT OF TRANSPORTATION

APPROVED
10/1/2012 — DATE
/S/ Travis Feltes — STATE TRAFFIC ENGINEER
FHWA

6

S.D.D. 15 A 3-2b

6

S.D.D. 15 A 3-2b

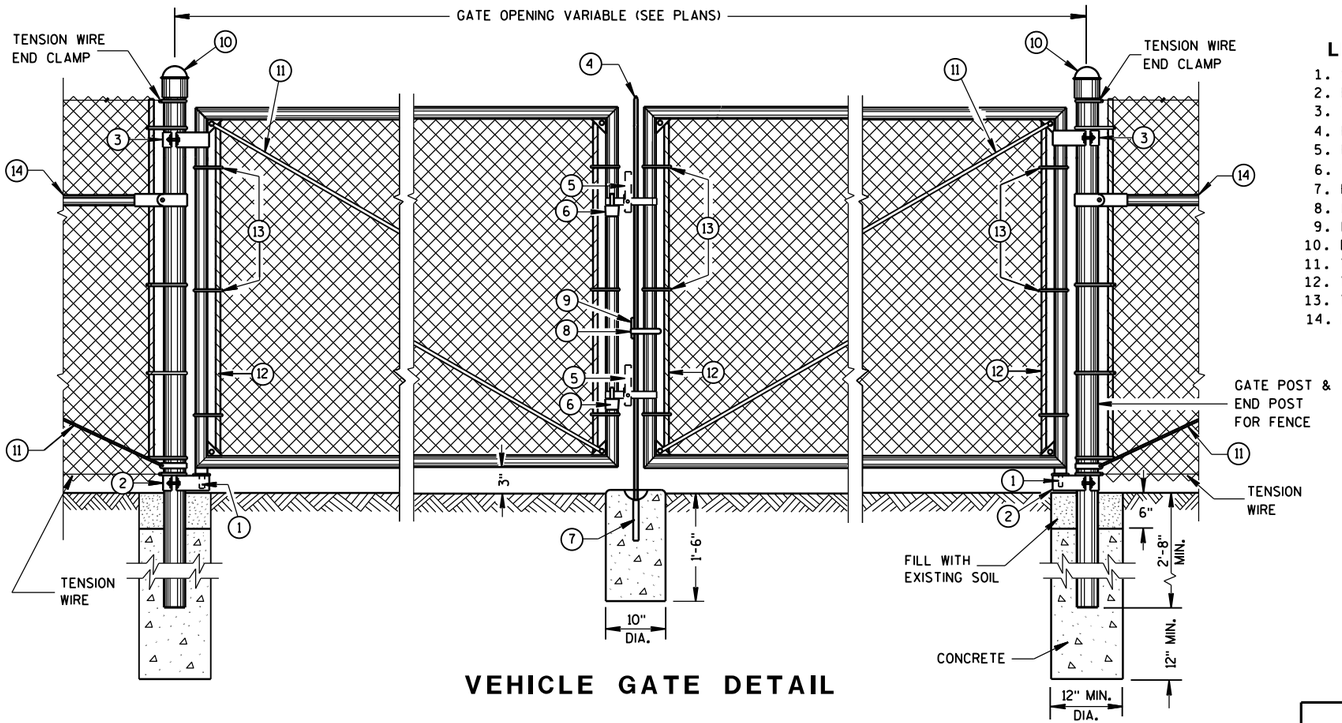

VEHICLE GATE DETAIL

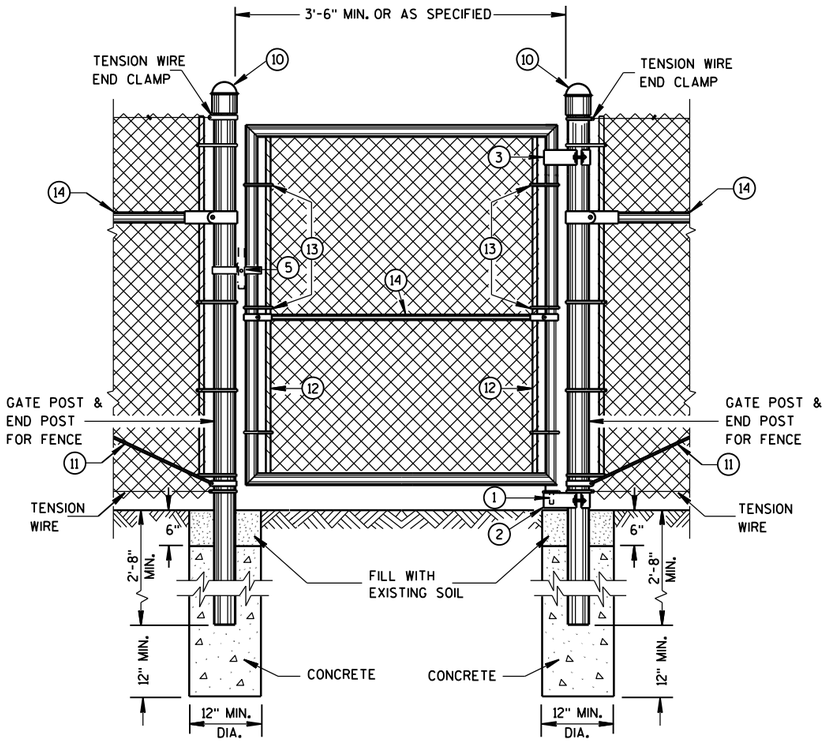

PEDESTRIAN GATE DETAIL

LEGEND

1. STRAIGHT PLUG
2. BOTTOM HINGE
3. TOP HINGE
4. PLUNGER ROD
5. FULCRUM LATCH
6. FORK CATCH *
7. PLUNGER ROD CATCH
8. LOCK KEEPER GUIDE
9. LOCK KEEPER
10. DOME TOPS
11. TRUSS RODS
12. TENSION BAR
13. TENSION BANDS
14. BRACE RAIL

*NOT REQUIRED ON SINGLE SWING PEDESTRIAN GATE

GENERAL NOTES

FENCE POSTS INSTALLED ON CONCRETE WALLS SHALL BE ANCHORED INTO EMBEDDED METAL SLEEVES OR CORED HOLE BY FILLING THE ANNULAR SPACE WITH PEA GRAVEL FOLLOWED BY AN EPOXY RESIN ADHESIVE. THE EPOXY RESIN ADHESIVE SHALL CONFORM TO THE REQUIREMENTS OF AASHTO M 235, CLASS A, B OR C.

USE FENCE FABRIC KNUCKLED AT BOTH SELVAGES.

FOR LEAF GATES GREATER THAN 8 FEET WIDE, INSTALL INTERIOR VERTICAL BRACE RAIL AT 8 FOOT INTERVALS.

FOR FABRIC HEIGHTS GREATER THAN 8 FEET, INSTALL INTERIOR HORIZONTAL BRACE RAILS TO LEAF GATE.

MAXIMUM SAG FOR OUTER GATE MEMBER SHALL NOT EXCEED THE GREATER OF 1% OF THE LEAF GATE WIDTH OR 2 INCHES.

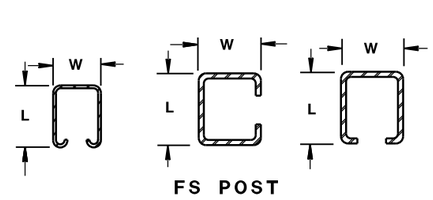

FS POST

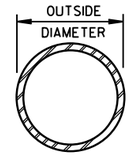

SP POST & RAIL

CROSS SECTIONS OF POSTS AND RAILS

SHAPE, SIZE AND WEIGHT REQUIREMENTS FOR FORMED STEEL FENCE POST

POST TYPE	LENGTH (L) INCH	WIDTH (W) INCH	WEIGHT LBS/FT
FS1	1.625	1.25	1.35
FS2†	1.875	1.625	1.850
FS2	1.875	1.625	2.400
FS3	2.250	1.700	2.780

SHAPE, SIZE AND WEIGHT REQUIREMENTS FOR ROUND STEEL FENCE POST

POST TYPE	OUTSIDE DIMENSION INCH	WALL THICKNESS INCH	WEIGHT LBS/FT
SP1	1.660	0.140	2.270
SP2	1.900	0.145	2.720
SP3	2.375	0.154	3.650
SP4	2.875	0.203	5.800
SP5	4.000	0.226	9.120
SP6	6.625	0.280	18.990
SP7	8.625	0.322	28.580

REQUIRED FENCE POST SIZES

USE	FABRIC HEIGHTS FEET	POST TYPE
TERMINAL POSTS **	LESS THAN OR EQUAL TO 6 FT.	SP3
	GREATER THAN OR EQUAL TO 6 FT.	SP4
LINE POSTS	LESS THAN OR EQUAL TO 6 FT.	SP2
	LESS THAN OR EQUAL TO 8 FT.	SP3
	GREATER THAN OR EQUAL TO 8 FT.	SP4
	LESS THAN OR EQUAL TO 8 FT.	FS2 OR FS2†
	GREATER THAN OR EQUAL TO 8 FT.	FS3

REQUIRED POST SIZE FOR GATES

USE	LEAF WIDTHS FEET	POST TYPE
GATES	LESS THAN OR EQUAL TO 6 FT.	SP4
	LESS THAN OR EQUAL TO 13 FT.	SP5
	LESS THAN OR EQUAL TO 18 FT.	SP6
	LESS THAN OR EQUAL TO 23 FT.	SP7

BRACE RAIL TYPES

USE		TYPE
BRACE RAIL		SP1 OR FS1

** INCLUDES END, CORNER, ANGLE, INTERSECTION AND INTERMEDIATE BRACED POSTS

FENCE CHAIN LINK

STATE OF WISCONSIN
DEPARTMENT OF TRANSPOI

6

S.D.D. 15 B 3-13a

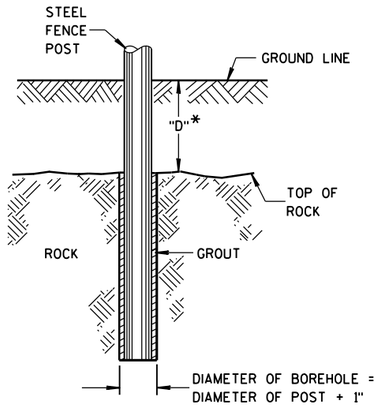

*IF "D" IS LESS THAN 2'-6", DRILL ROCK AND INSTALL GROUT

ROCK INSTALLATION OF LINE POST

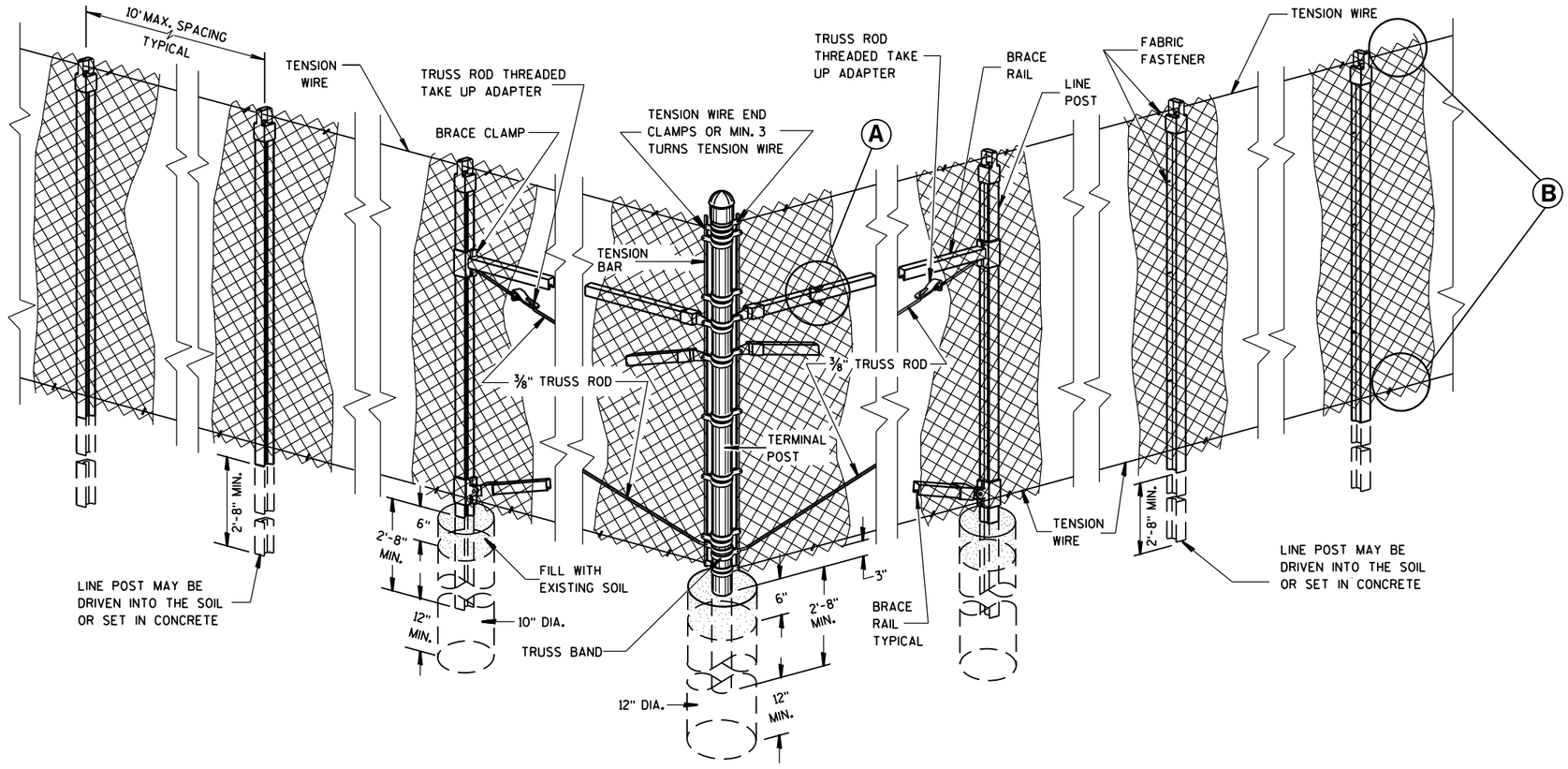

END, CORNER, ANGLE INTERSECTION & INTERMEDIATE BRACED POSTS

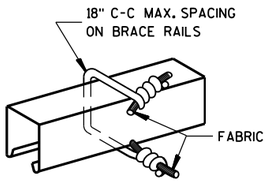

BRACE RAIL

FABRIC FASTENER

Ⓐ

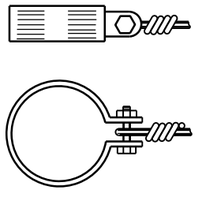

TENSION WIRE END CLAMP

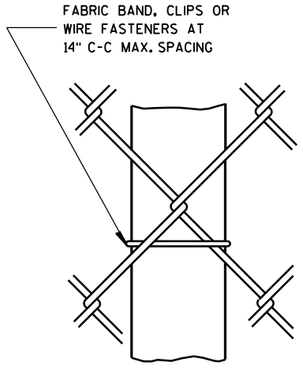

LINE POST

FABRIC FASTENER

AT TOP

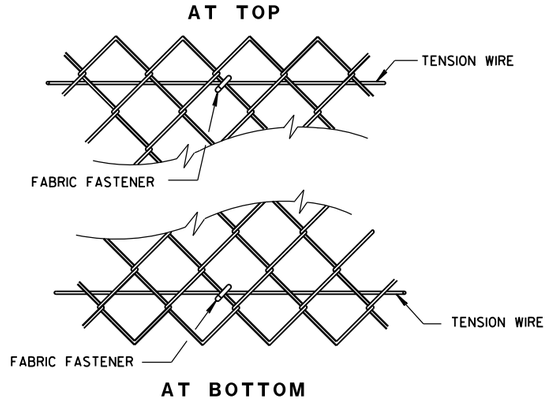

AT BOTTOM

SELVAGES

Ⓑ

FENCE CHAIN LINK

STATE OF WISCONSIN
DEPARTMENT OF TRANSPORTATION

APPROVED
7/16/2013
DATE
/S/ Jerry H. Zogg
ROADWAY STANDARDS D ENGINEER
FHWA

6

S.D.D. 15 B 3-13b

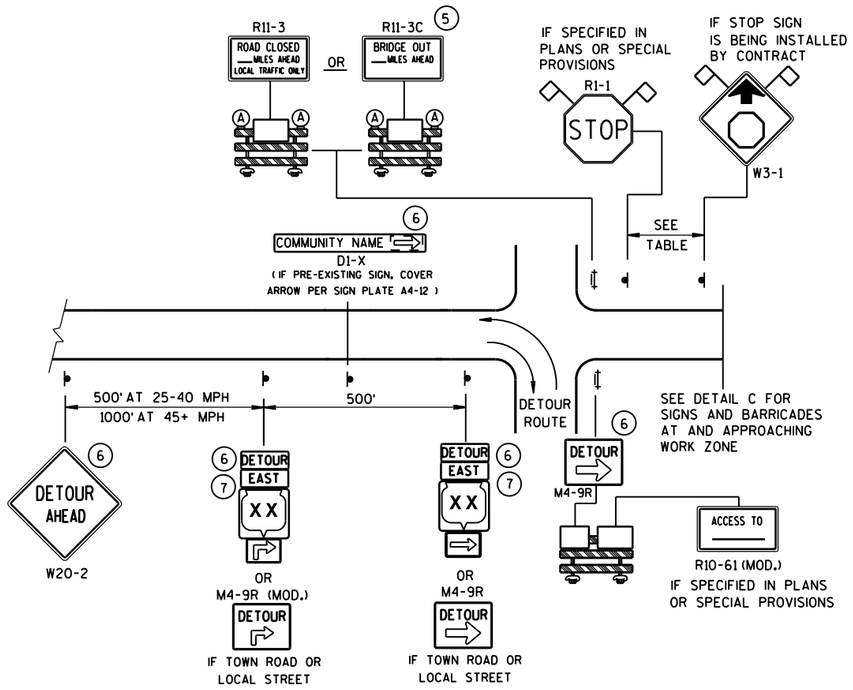

DETAIL A
MAINLINE CLOSURE WITH POSTED DETOUR

WORK ZONE GREATER THAN ½ MILE FROM DETOUR ROUTE (1000 FEET IF URBAN)

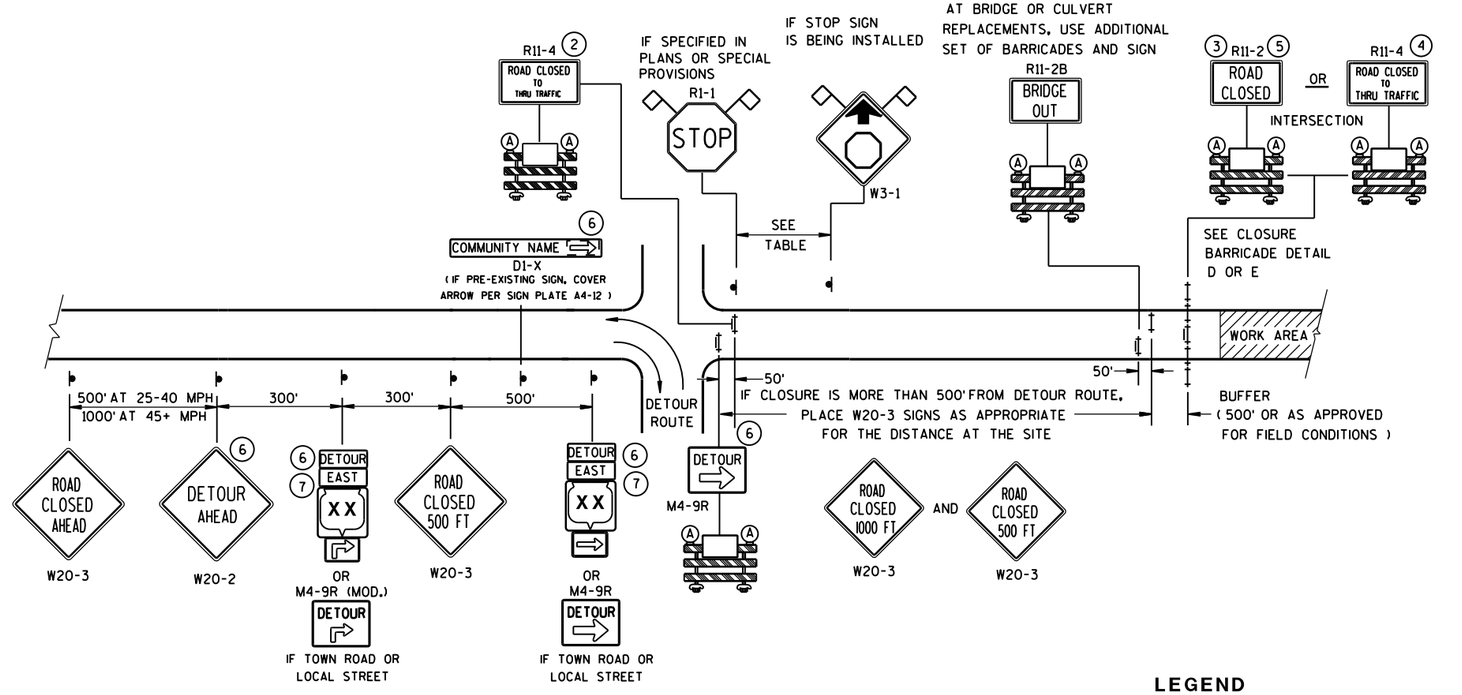

DETAIL B
MAINLINE CLOSURE WITH POSTED DETOUR

WORK ZONE LESS THAN ½ MILE FROM DETOUR ROUTE (1000 FEET IF URBAN)

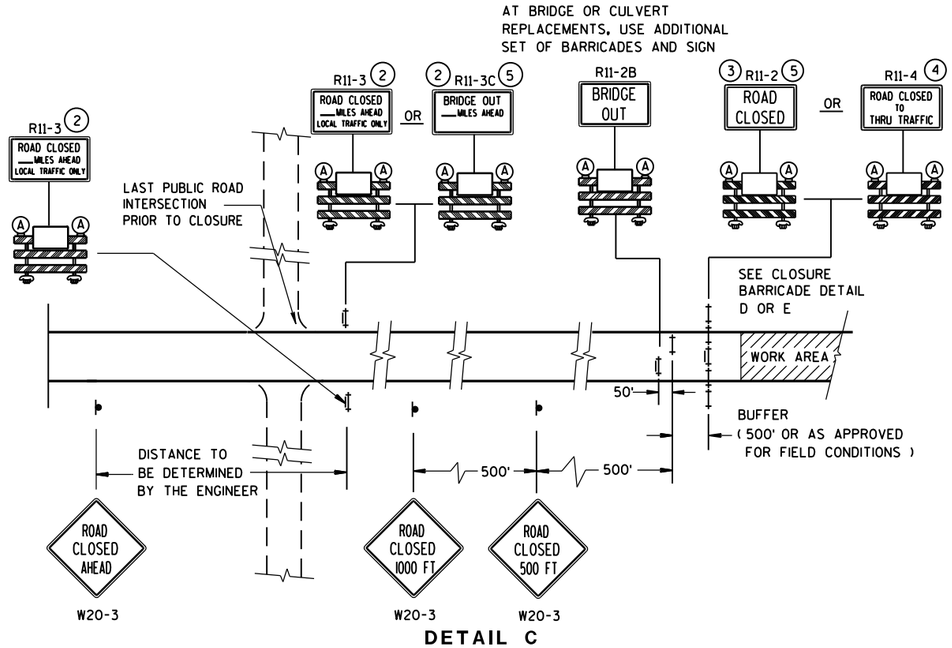

DETAIL C
MAINLINE CLOSURE, NO POSTED DETOUR

SPEED LIMIT (MPH)	"STOP AHEAD" ADVANCE WARNING DISTANCE (FT)
25	200
30	200
35	350
40	350
45	500
50	550
55	750

LEGEND

- SIGN ON PERMANENT SUPPORT
- TYPE III BARRICADE
- TYPE III BARRICADE WITH ATTACHED SIGN
- (A) TYPE "A" WARNING LIGHT (FLASHING)
- WORK AREA
- DETOUR / EAST — M4-8 / M3-X
- XX — M1-4; COUNTY XX — M1-5A; XX — M1-6
- M05-1 OR M06-1
- FLAGS, 16" X 16" MIN., (ORANGE)

SEE SDD 15C2-SHEET "**b**" FOR GENERAL NOTES AND FOOTNOTES (1) THROUGH (7)

BARRICADES AND SIGNS FOR MAINLINE CLOSURES

STATE OF WISCONSIN
DEPARTMENT OF TRANSPORTATION

8/2013 DATE — /S/ Travis Feltes STATE TRAFFIC ENGINEER

FHWA

S.D.D. 15 C 2-5a

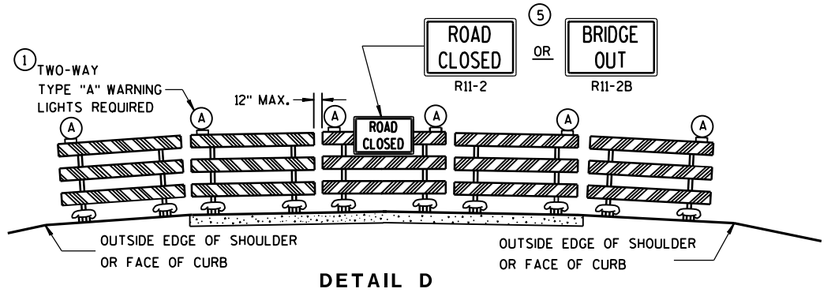

DETAIL D

ROAD CLOSURE BARRICADE DETAIL

APPROACH VIEW

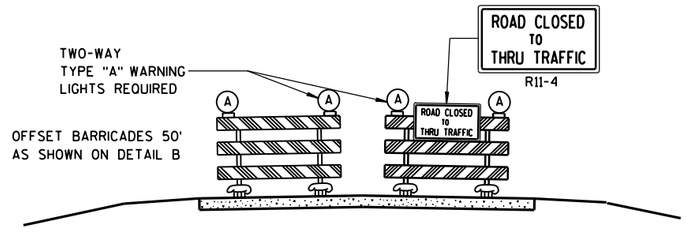

DETAIL E

LANE CLOSURE BARRICADE DETAIL

APPROACH VIEW

SEE SDD 15C2-SHEET "**a**" FOR LEGEND

GENERAL NOTES

THE EXACT NUMBER, LOCATION, AND SPACING OF ALL SIGNS AND BARRICADES SHALL BE ADJUSTED TO FIT FIELD CONDITIONS AS APPROVED BY THE ENGINEER.

ANY SIGNS TEMPORARY OR EXISTING, WHICH CONFLICT WITH TRAFFIC CONTROL "IN USE" SHALL BE REMOVED OR COVERED AS NEEDED AND AS APPROVED BY THE ENGINEER.

THE SPACING BETWEEN TRAFFIC CONTROL SIGNS SHOULD BE ADJUSTED TO NOT CONFLICT WITH AND SHOULD PROVIDE A DESIRABLE MINIMUM OF 200 FEET CLEARANCE TO EXISTING SIGNS THAT WILL REMAIN IN PLACE.

BARRICADES THAT MUST BE MOVED FOR A WORK OPERATION SHALL BE IMMEDIATELY RE-ESTABLISHED UPON COMPLETION OF THE OPERATION OR, FOR CONTINUING OPERATIONS, AT THE END OF EACH WORKING DAY.

SIGNS THAT WILL BE IN PLACE LESS THAN 7 CONTINUOUS DAYS AND NIGHTS MAY BE MOUNTED ON PORTABLE SUPPORTS.

ALL TYPE III BARRICADES SHALL HAVE RAILS REFLECTORIZED ON BOTH FACES. STRIPES SHALL BE PROPERLY SLOPED DOWN TOWARD THE TRAFFIC SIDE OR AS SHOWN IN THE ROAD CLOSURE BARRICADE DETAIL D FOR FULL ROAD CLOSURES.

TYPE "A" LOW-INTENSITY FLASHING WARNING LIGHTS SHALL BE VISIBLE ON BOTH SIDES OF THE BARRICADE.

THE R11-2, R11-3, M4-9, R11-4 AND R10-61 SIGNS PLACED ON BARRICADES SHALL COVER NO MORE THAN THE TOP RAIL. THE SIGNS SHALL NOT COVER ANY PORTION OF THE MIDDLE OR BOTTOM RAILS.

"WO AND "MO" SIGNS ARE THE SAME AS "W" AND "M" SIGNS EXCEPT THE BACKGROUND IS ORANGE.

ALL SIGNS SHALL BE 48" X 48" UNLESS OTHERWISE NOTED BELOW:
- R11-2 SHALL BE 48" X 30".
- R11-3, R11-4 AND R10-61 SHALL BE 60" X 30".
- M4-9 SHALL BE 30" X 24".
- M3-X SHALL BE 24" X 12". (36" X 18" IF NEEDED TO MATCH EXISTING SIGNS.)
- M4-8 SHALL BE 24" X 12". (30" X 15" IF NEEDED TO MATCH EXISTING SIGNS.)
- M1-4, M1-5A, AND M1-6 SHALL BE 24" X 24". (36" X 36" IF NEEDED TO MATCH EXISTING SIGNS.)
- M05-1 AND M06-1 SHALL BE 21" X 21". (30" X 30" IF NEEDED TO MATCH EXISTING SIGNS.)
- D1-X SHALL BE AS SHOWN ON SPECIFIC PROJECT SIGNING DETAIL SHEETS.
- R1-1 SHALL BE 36" X 36".

(1) TWO WARNING LIGHTS SHALL BE PROVIDED ON THE CENTER BARRICADE AND A MINIMUM OF ONE WARNING LIGHT SHALL BE PROVIDED ON EACH OF THE OTHER BARRICADES WITHIN THE ROADWAY LIMITS. SPACING OF THE WARNING LIGHTS SHALL BE UNIFORM TO THE EDGE OF ROADWAY AS SHOWN (APPROX. 8-FOOT LIGHT SPACING).

(2) THESE SIGNS AND BARRICADES ARE NOT REQUIRED IF ROAD CLOSURE BEGINS AT INTERSECTION.

(3) FOR ROAD CLOSURE WITHOUT LOCAL ACCESS TO PROJECT, SEE ROAD CLOSURE BARRICADE DETAIL D.

(4) FOR ROAD CLOSURE WITH LOCAL ACCESS TO PROJECT, SEE LANE CLOSURE BARRICADE DETAIL E.

(5) FOR BRIDGE OR CULVERT REPLACEMENTS, SUBSTITUTE "BRIDGE OUT" INSTEAD OF "ROAD CLOSED" ON R11-2 AND R11-3 SIGNS.

(6) INSTALL DETOUR AND COMMUNITY GUIDE SIGNS AND ARROWS ONLY IF SPECIFIED IN THE CONTRACT. IF THERE ARE EXISTING ROUTE MARKER ASSEMBLIES THAT WILL REMAIN IN PLACE, ADJUST THE LOCATION OF THE DETOUR ROUTE SIGNS TO CORRESPOND WITH THE EXISTING ASSEMBLIES. MODIFY EXISTING SIGNS WHERE POSSIBLE. SEE SPECIFIC PROJECT DETOUR SIGNING DETAIL SHEETS. IF DETOUR SIGNS ARE BEING INSTALLED BY OTHERS, PLACE THE CONTRACTED TRAFFIC CONTROL SIGNS TO ALLOW FOR PLACEMENT OF ALL WARNING, DETOUR AND GUIDE SIGNS AS SHOWN.

(7) "EAST" CARDINAL DIRECTION MARKERS AND RIGHT TURN ARROWS ARE SHOWN. USE OTHER CARDINAL DIRECTIONS AND ARROWS AS APPROPRIATE.

BARRICADES AND SIGNS FOR MAINLINE CLOSURES

STATE OF WISCONSIN
DEPARTMENT OF TRANSPORTATION

8/2013 — DATE
/S/ Travis Feltes — STATE TRAFFIC ENGINEER
DESIGN
FHWA

6

S.D.D. 15 C 2-5b

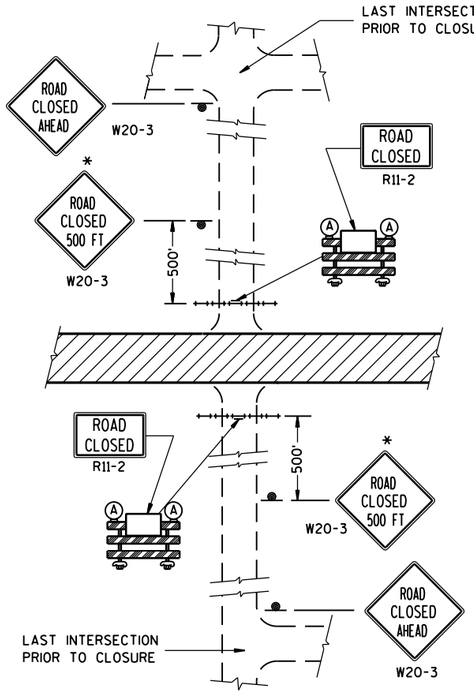

DETAIL 1

(NO ACCESS TO PROJECT)

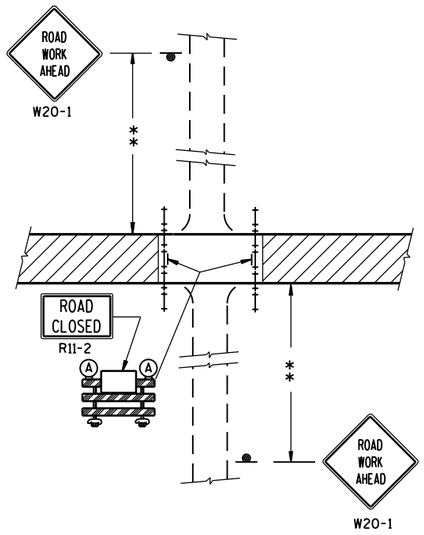

DETAIL 2

(PUBLIC CROSS-TRAFFIC MAINTAINED. NO ACCESS TO PROJECT).

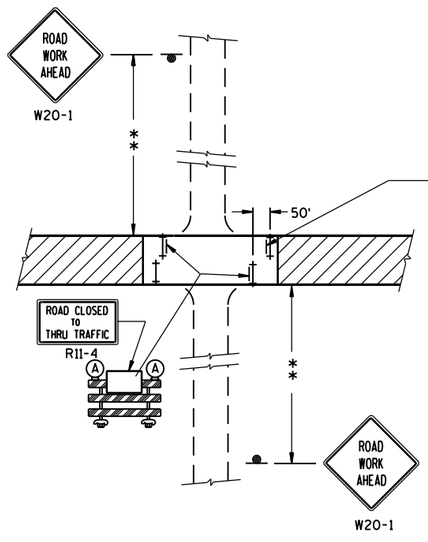

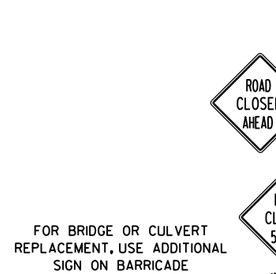

DETAIL 3

(PUBLIC CROSS-TRAFFIC MAINTAINED. CONTRACTOR, LOCAL BUSINESS AND RESIDENT ACCESS).

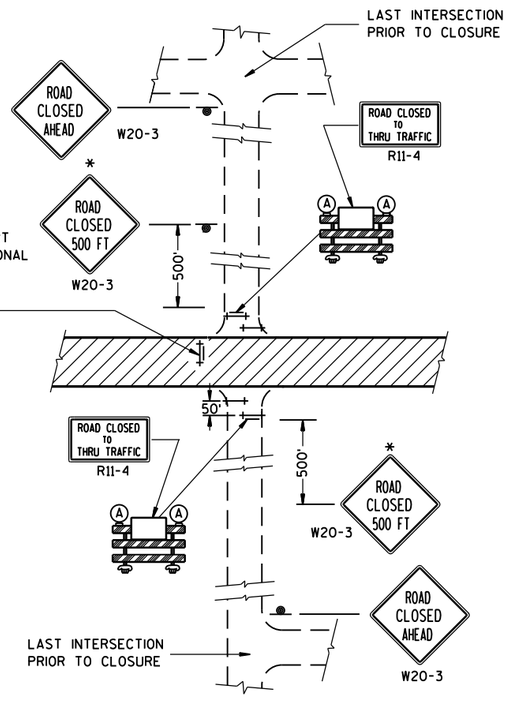

DETAIL 4

(CONTRACTOR, LOCAL BUSINESS AND RESIDENT ACCESS TO PROJECT)

GENERAL NOTES

THE EXACT NUMBER, LOCATION, AND SPACING OF ALL SIGNS AND BARRICADES SHALL BE ADJUSTED TO FIT FIELD CONDITIONS AS APPROVED BY THE ENGINEER.

ANY SIGNS TEMPORARY OR EXISTING, WHICH CONFLICT WITH TRAFFIC CONTROL "IN USE" SHALL BE REMOVED OR COVERED AS NEEDED AND AS APPROVED BY THE ENGINEER.

THE SPACING BETWEEN TRAFFIC CONTROL SIGNS SHOULD BE ADJUSTED TO NOT CONFLICT WITH AND SHOULD PROVIDE A DESIRABLE MINIMUM OF 200 FEET CLEARANCE TO EXISTING SIGNS THAT WILL REMAIN IN PLACE.

IF A "STOP" SIGN MUST BE REMOVED FOR A WORK OPERATION, A TEMPORARY "STOP" SIGN SHALL BE PLACED PRIOR TO THE SIGN REMOVAL, OR A FLAGGER SHALL BE PROVIDED UNTIL THE SIGN IS RE-ESTABLISHED.

BARRICADES THAT MUST BE MOVED FOR A WORK OPERATION SHALL BE IMMEDIATELY RE-ESTABLISHED UPON COMPLETION OF THE OPERATION OR, FOR CONTINUING OPERATIONS, AT THE END OF EACH WORKING DAY.

SIGNS THAT WILL BE IN PLACE LESS THAN 7 CONTINUOUS DAYS AND NIGHTS MAY BE MOUNTED ON PORTABLE SUPPORTS.

ALL TYPE III BARRICADES SHALL HAVE RAILS REFLECTORIZED ON BOTH FACES. STRIPES SHALL BE PROPERLY SLOPED DOWN TOWARD THE TRAFFIC SIDE OR AS SHOWN IN THE ROAD CLOSURE BARRICADE DETAIL D FOR FULL ROAD CLOSURES.

TYPE "A" LOW-INTENSITY FLASHING WARNING LIGHTS SHALL BE VISIBLE ON BOTH SIDES OF THE BARRICADE.

THE R11-2, R11-3 AND R11-4 SIGNS PLACED ON BARRICADES SHALL COVER NO MORE THAN THE TOP RAIL. THE SIGNS SHALL NOT COVER ANY PORTION OF THE MIDDLE OR BOTTOM RAILS.

ALL SIGNS SHALL BE 48" X 48" UNLESS OTHERWISE NOTED BELOW:
R11-2 SHALL BE 48" X 30".
R11-4 AND R11-3 SHALL BE 60" X 30".

*OMIT THE "ROAD CLOSED 500 FT." SIGN IF THE LAST INTERSECTION IS 500 FT. OR LESS FROM THE WORK ZONE.

**500' MAX. OR AT LAST INTERSECTION WHICHEVER IS CLOSER.

LEGEND

- SIGN ON PERMANENT SUPPORT
- TYPE III BARRICADE
- TYPE III BARRICADE WITH ATTACHED SIGN
- (A) TYPE "A" WARNING LIGHT (FLASHING)
- WORK AREA

BARRICADES AND SIGNS FOR SIDEROAD CLOSURES

STATE OF WISCONSIN
DEPARTMENT OF TRANSPORTATION

APPROVED
8/2013 — DATE
/S/ Travis Feltes — STATE TRAFFIC ENGINEER
FHWA

6

S.D.D. 15 C 3-2

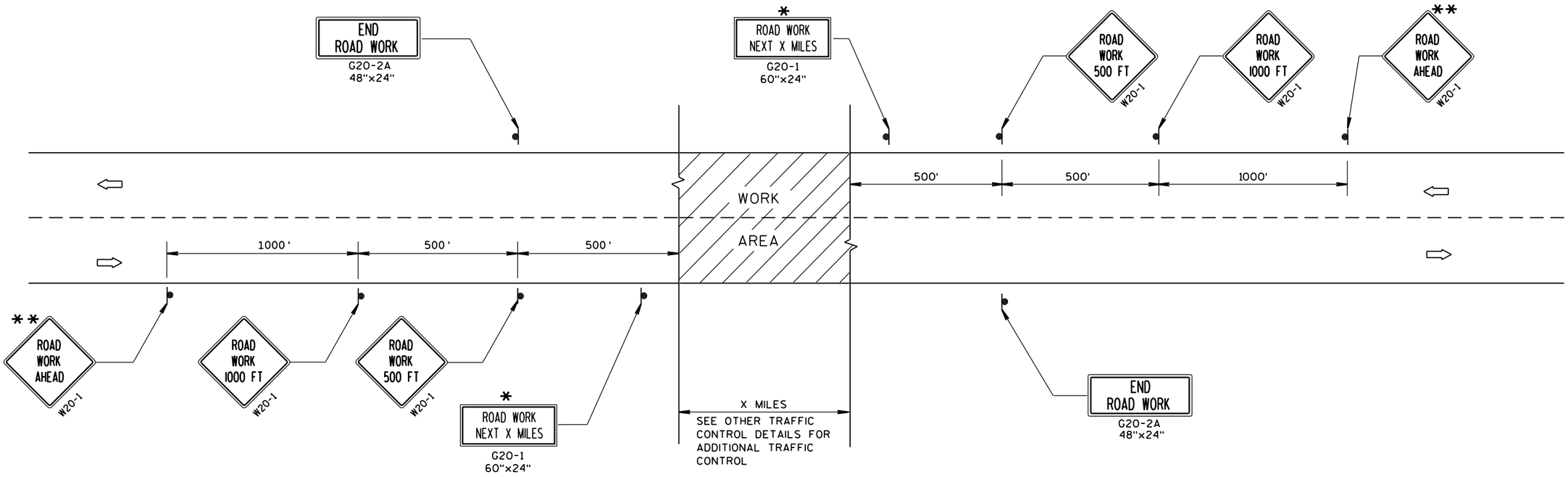

TYPICAL SIDEROAD APPROACH WARNING SIGN DETAIL

GENERAL NOTES

THE EXACT NUMBER, LOCATION, AND SPACING OF ALL SIGNS AND DEVICES SHALL BE ADJUSTED TO FIT FIELD CONDITIONS.

THE SPACING BETWEEN TRAFFIC CONTROL SIGNS SHOULD BE ADJUSTED TO NOT CONFLICT WITH AND SHOULD PROVIDE A MINIMUM OF 200 FEET (500 FEET DESIRABLE) CLEARANCE TO EXISTING SIGNS THAT WILL REMAIN IN PLACE.

ALL SIGNS ARE 48"x48" UNLESS OTHERWISE NOTED.

SIGNS THAT WILL BE IN PLACE LESS THAN 7 CONTINUOUS DAYS AND NIGHTS MAY BE MOUNTED ON PORTABLE SUPPORTS.

IF A "STOP" SIGN MUST BE REMOVED FOR A WORK OPERATION, A TEMPORARY "STOP" SIGN SHALL BE PLACED PRIOR TO THE SIGN REMOVAL, OR A FLAGGER SHALL BE PROVIDED UNTIL THE SIGN IS RE-ESTABLISHED.

* OMIT G20-1 SIGNS IF LENGTH OF WORK AREA IS 2 MILES OR LESS.

** PLACE ADDITIONAL W20-1 "ROAD WORK AHEAD" SIGN IF WORK AREA WITHIN THE PROJECT IS SEPARATED BY MORE THAN 2 MILES FROM PREVIOUS WORK AREA.

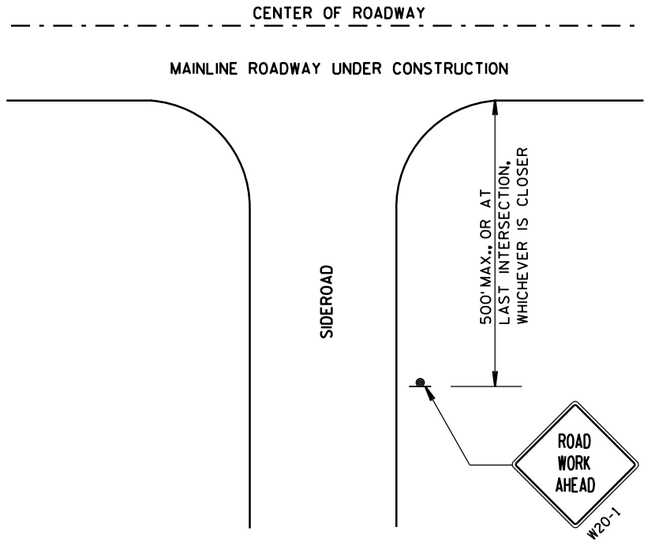

LEGEND

- SIGN ON PERMANENT SUPPORT
- DIRECTION OF TRAFFIC
- WORK AREA

TRAFFIC CONTROL, ADVANCE WARNING SIGNS 45 M.P.H. OR GREATER TWO-WAY UNDIVIDED ROAD OPEN TO TRAFFIC

STATE OF WISCONSIN
DEPARTMENT OF TRANSPORTATION

APPROVED

8/2013 — DATE

/S/ Travis Feltes — STATE TRAFFIC ENGINEER

FHWA

SIGN

6

S.D.D. 15 C 4-2

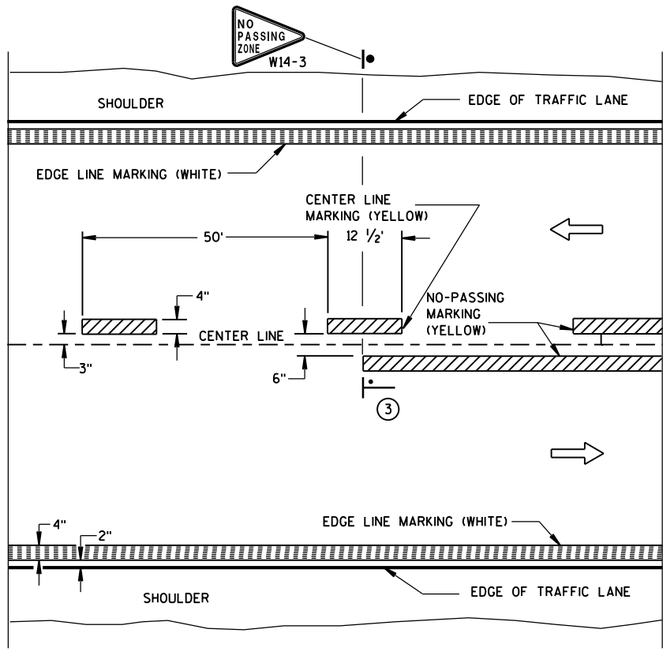

TWO WAY TRAFFIC

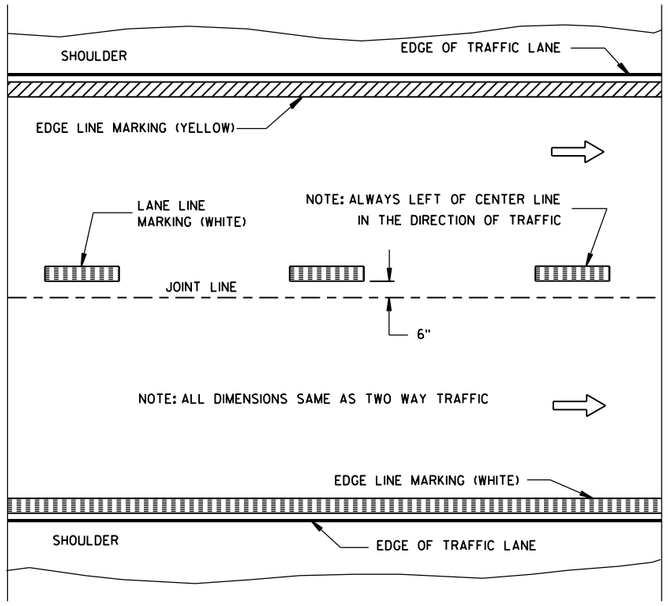

ONE WAY TRAFFIC

PERMANENT PAVEMENT MARKING

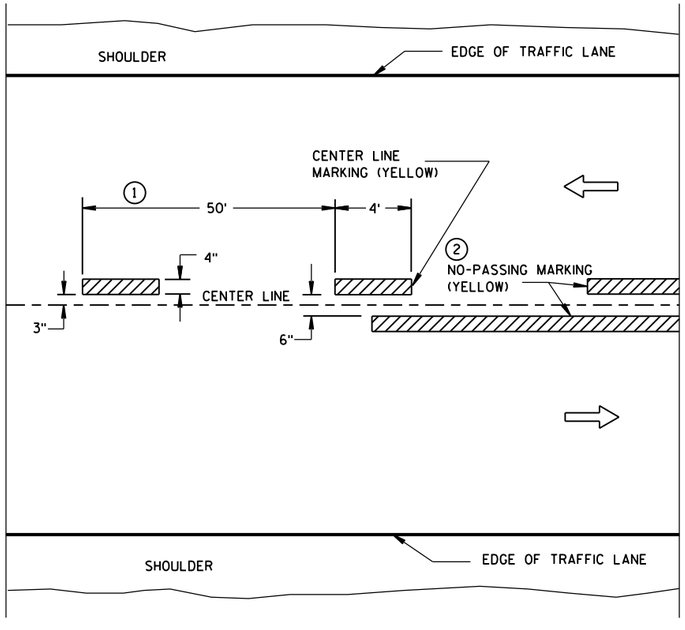

TWO WAY TRAFFIC

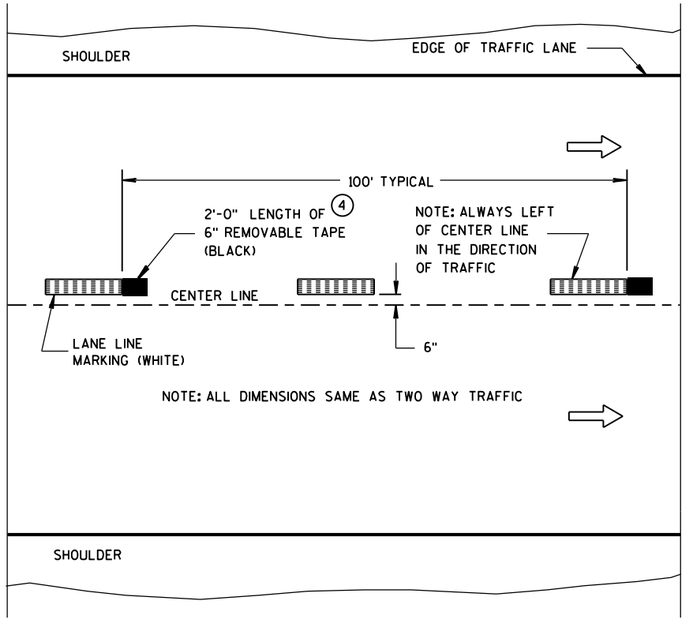

ONE WAY TRAFFIC

TEMPORARY (INTERMEDIATE) PAVEMENT MARKING

(SHOWS CYCLE FOR TEMPORARY CENTER LINE OR TEMPORARY LANE LINE MARKING)

GENERAL NOTES

DETAILS OF CONSTRUCTION NOT SHOWN ON THIS DRAWING SHALL CONFORM TO STANDARD SPECIFICATIONS AND SPECIAL PROVISIONS.

1. HALF CYCLE LENGTHS (25'±) WITH 2' MINIMUM STRIPE LENGTHS SHALL BE PROVIDED ON ROADWAYS (INCLUDING TEMPORARY TRAVELED WAYS) WITH REVERSE CURVATURE, CURVATURE OF OVER 5 DEGREES OR WHEN DIRECTED BY THE ENGINEER TO MARK UNUSUAL ALIGNMENT OF THE TRAVELED WAY.
2. NO PASSING ZONE TEMPORARY PAVEMENT MARKING IS REQUIRED TO BE PLACED, WHERE APPROPRIATE, ALONG WITH CENTERLINE TEMPORARY PAVEMENT MARKING WHEN A SAME DAY PERMANENT PAVEMENT MARKING ITEM IS INCLUDED IN THE CONTRACT.
3. NO PASSING ZONE MARKINGS ARE PLACED ACCORDING TO "T" MARKINGS. IF EXISTING NO PASSING ZONE W14-3 SIGNS ARE BEYOND 50 FEET IN EITHER DIRECTION, THE SIGNS SHALL BE MOVED TO THE "T" MARKINGS.
4. CONCRETE ONLY.

NOTE

ARROW SYMBOL (⇨) SHOWS DIRECTION OF TRAVEL

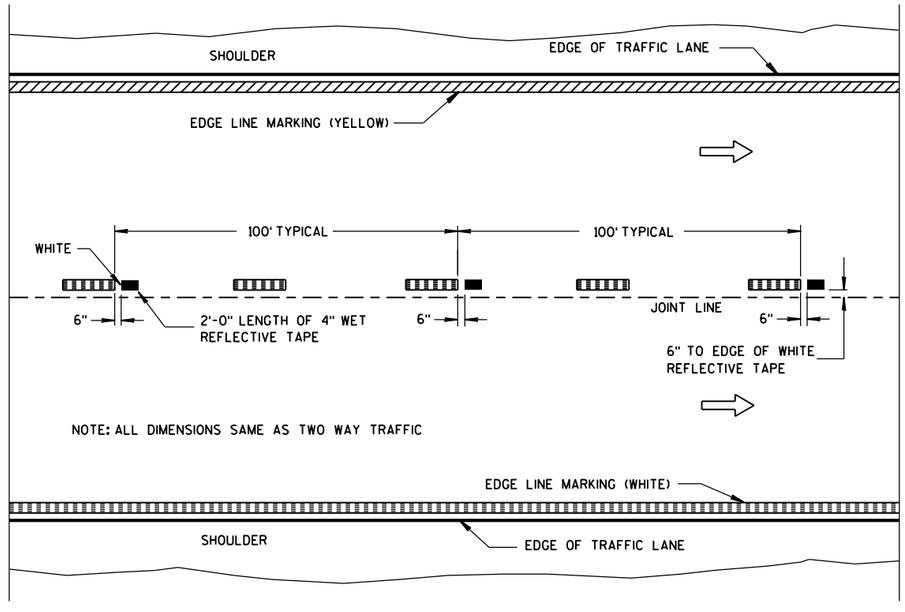

WET REFLECTIVE TAPE SUPPLEMENT TO
SPRAYED OR NON WET REFLECTIVE TAPE LANE LINE

LEGEND

"T" MARKING

POST MOUNTED SIGN

PAVEMENT MARKING (MAINLINE)

STATE OF WISCONSIN
DEPARTMENT OF TRANSPORTATION

APPROVED

5-13-2013
DATE

/S/ Travis Feltes
STATE TRAFFIC E

FHWA

6

S.D.D. 15 C 8-16a

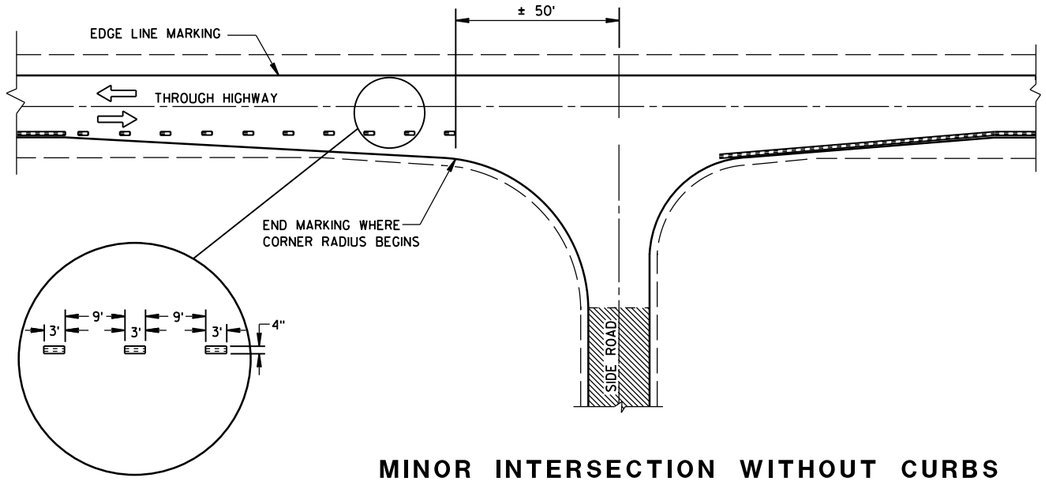

MINOR INTERSECTION WITHOUT CURBS

GENERAL NOTES

EDGE LINES SHALL BE OMITTED THROUGH INTERSECTIONS. EDGE LINES SHALL BE CONTINUED THROUGH DRIVEWAYS.

(1) WHEN DISTANCE "A" IS LESS THAN 250 FEET, OMIT LANE LINE.

(2) WHEN DISTANCE "B" IS LESS THAN 100 FEET, OMIT CHANNELIZING LANE LINE.

(3) ALTERNATIVE MARKING SHALL BE PROVIDED WHEN SPECIFIED IN THE CONTRACT. TYPICAL SITUATIONS WHERE THIS MARKING MAY BE REQUIRED ARE WHERE THE INTERSECTION IS ON A SHARP HORIZONTAL CURVE OR CREST VERTICAL CURVE IN AN UNLIGHTED AREA SUCH THAT THE EDGE LINE MAY BE MISLEADING TO THE MOTORIST OR DISAPPEAR FROM SIGHT.

(4) THE EDGE LINE IN THE TAPER AREAS OF THE BYPASS LANE AND THE BYPASS LANE SHALL BE LOCATED 1-FOOT FROM EDGE OF PAVEMENT TO THE OUTSIDE EDGE OF EDGE LINE.

(5) BARRIER LINE ENDS AT SIDE ROAD PAVEMENT/SURFACE EDGE EXTENSION.

(6) BARRIER LINE STARTS 500 FEET PRIOR TO THE BYPASS TAPER.

(7) IF THE DISTANCE BETWEEN 2 SUCCESSIVE NO-PASSING ZONES IS LESS THAN THE MINIMUM DISTANCE BETWEEN ZONES, CONNECT THE 2 ZONES.

(8) 3' LINE 9' GAP, EXCEPT RETRACE THE EXISTING LINE - GAP PATTERN WHERE EXISTING MARKINGS ARE IN PLACE.

ARROW SYMBOL (⇨) SHOWS DIRECTION OF TRAVEL

(7)

POSTED SPEED (MPH)	MINIMUM DISTANCE BETWEEN ZONES (FEET)
25 - 30	528
35 - 40	528
45 - 50	686
55	792

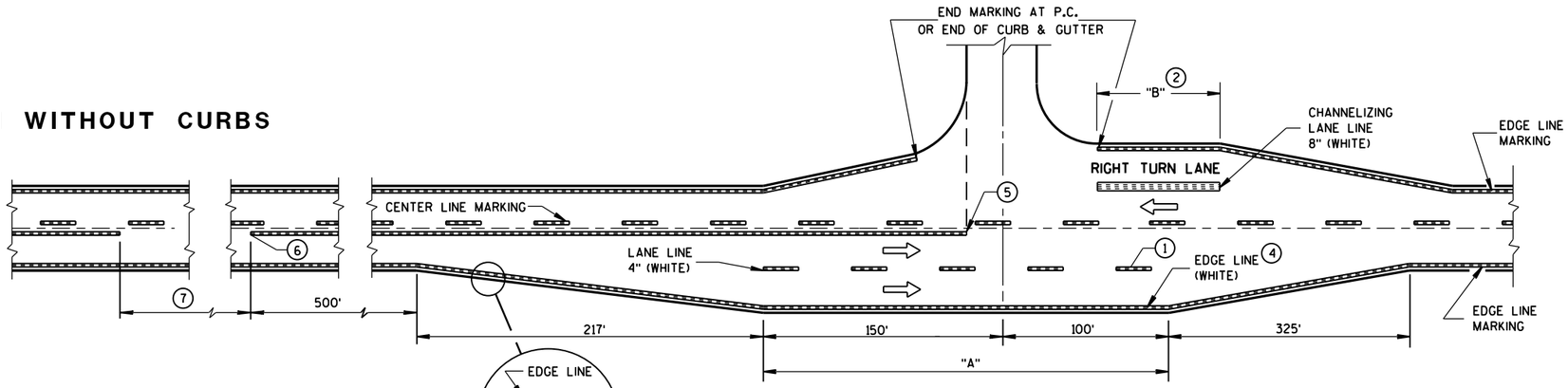

MAJOR INTERSECTIONS

(INTERSECTION WITH FULL RIGHT TURN LANE OR BYPASS LANES)

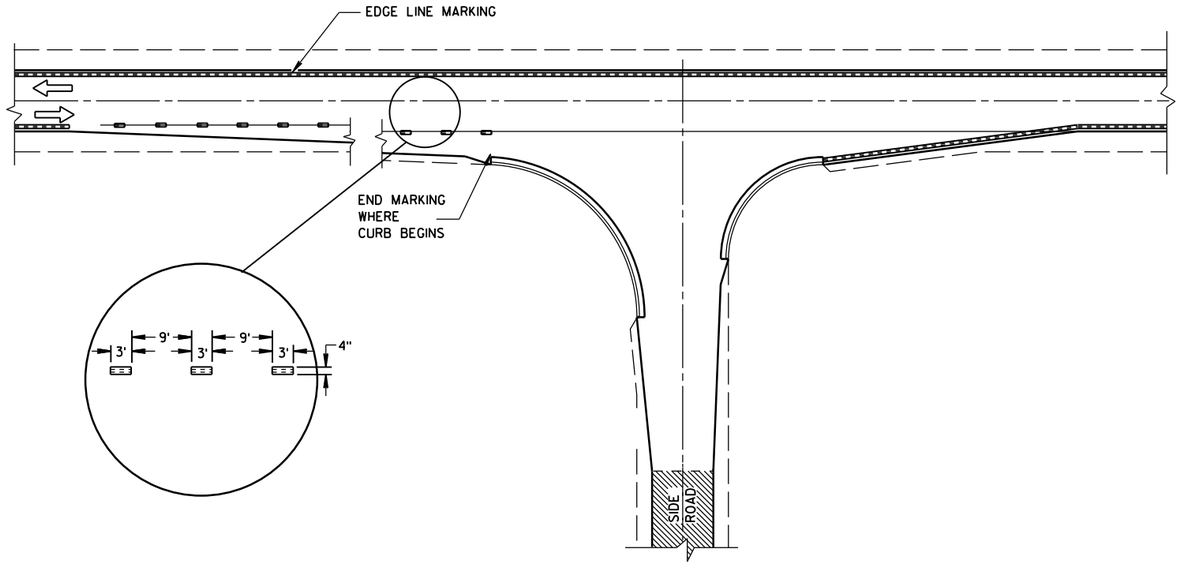

MINOR INTERSECTION WITH CURBS

(TYPICAL MARKING)

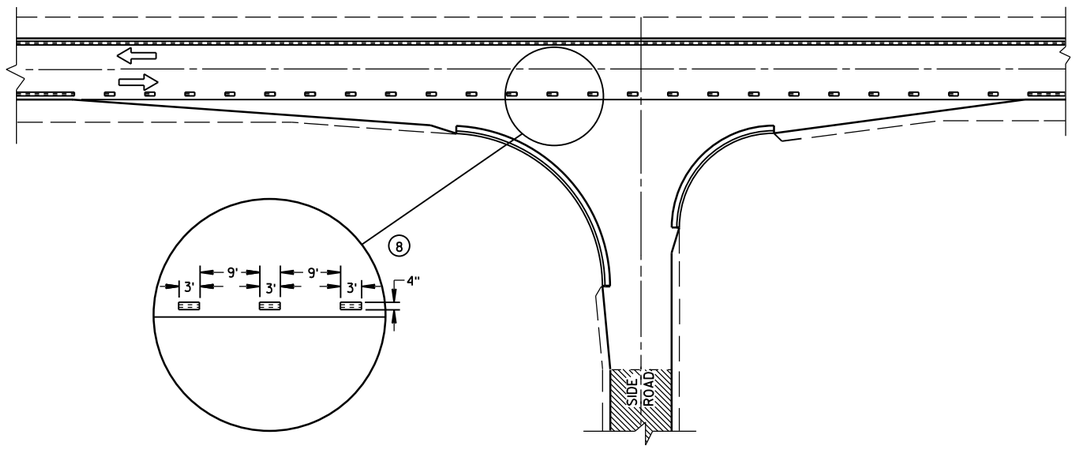

MINOR INTERSECTION WITH CURBS

(3) (FOR SPECIAL CONDITIONS AS SPECIFIED)

PAVEMENT MARKING
(INTERSECTIONS)

STATE OF WISCONSIN
DEPARTMENT OF TRANSPOR

6

S.D.D. 15 C 8-16b

6

S.D.D. 15 C 8-16b

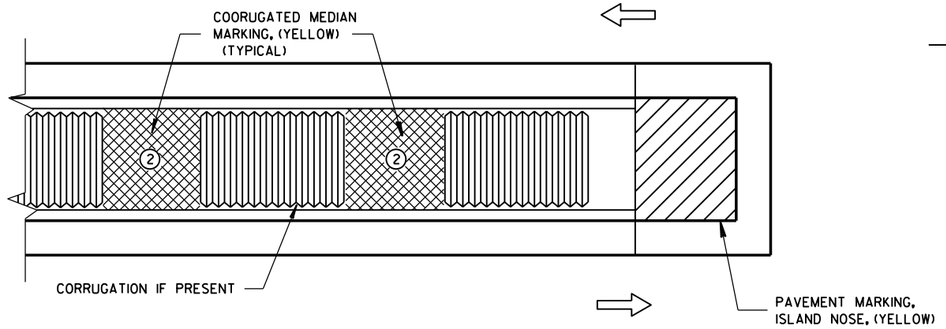

MEDIAN ISLAND WITH SQUARE BLUNT NOSE

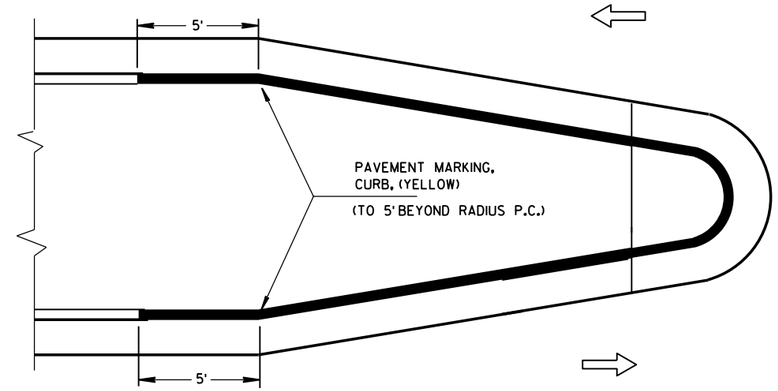

MEDIAN ISLAND WITH ROUND BLUNT NOSE

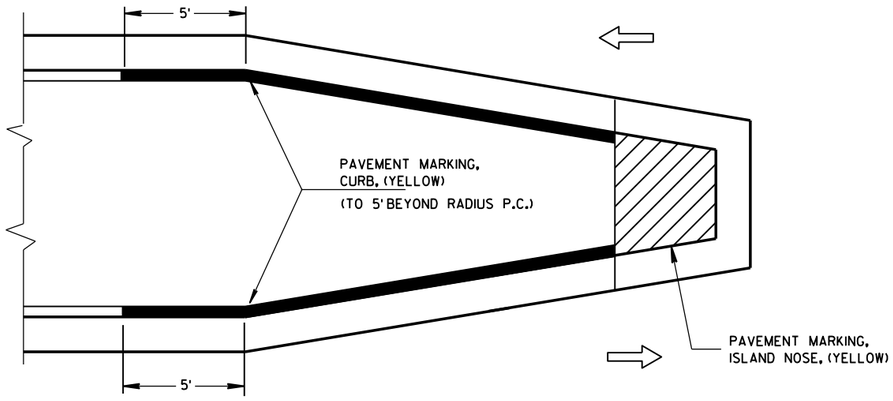

MEDIAN ISLAND WITH SLOPED NOSE

TYPICAL PLACEMENT OF PAVEMENT MARKING ON MEDIAN ISLANDS

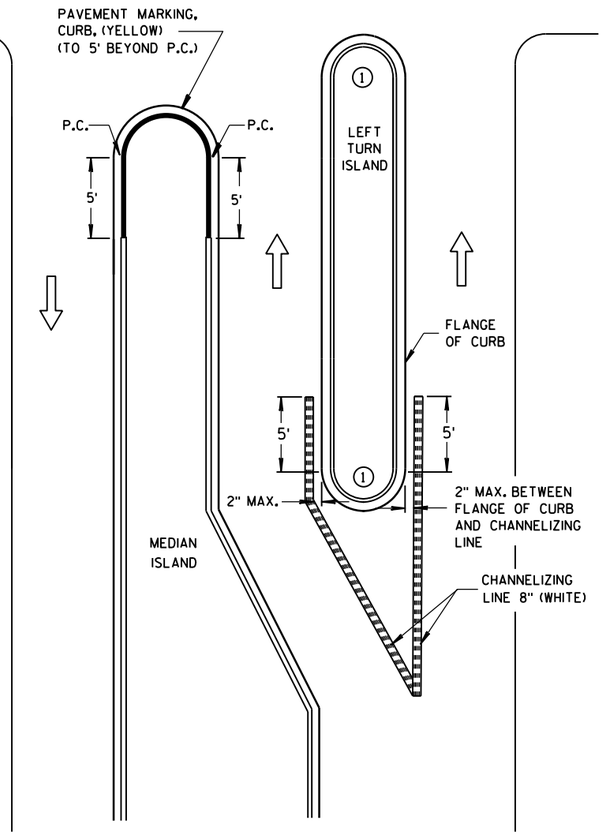

LEFT TURN & MEDIAN ISLAND

GENERAL NOTES

1. DO NOT MARK CURB NOSES THAT SEPARATE LANES OF TRAFFIC TRAVELING IN THE SAME DIRECTION.

2. WHEN CONCRETE CORRUGATED MEDIAN IS CONSTRUCTED TO SEPARATE TRAFFIC OPERATING IN THE OPPOSING DIRECTION YELLOW PAVEMENT MARKING SHALL BE APPLIED TO THE FLAT PORTION OF THE CONCRETE CORRUGATED MEDIAN. THE ITEM OF PAVEMENT MARKING, CONCRETE CORRUGATED MEDIAN, WILL BE MEASURED IN PLACE AND AND ACCEPTED IN ACCORDANCE WITH THE CONTRACT AND PAID FOR AT THE CONTRACT UNIT PRICE PER SQUARE FOOT.

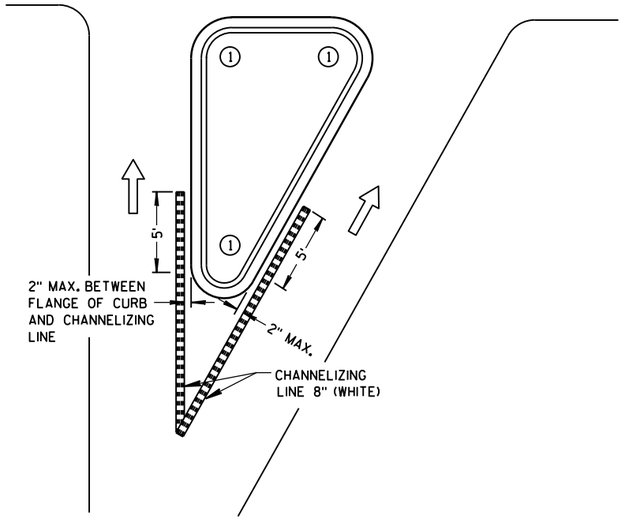

RIGHT TURN ISLAND

LEGEND

- ISLAND NOSE MARKING
- CURB MARKING
- CORRUGATED MEDIAN MARKING
- DIRECTION OF TRAVEL

PAVEMENT MARKING
(ISLANDS)

STATE OF WISCONSIN
DEPARTMENT OF TRANSPOI

6

S.D.D. 15 C 8-16f

6

S.D.D. 15 C 8-16f

LEGEND

SIGN ON PORTABLE OR PERMANENT SUPPORT

DIRECTION OF TRAFFIC

WORK AREA

FLAGGER, EQUIPPED WITH STOP/SLOW PADDLE FASTENED ON SUPPORT STAFF

SIGN SPACING TABLE

SPEED LIMIT	SIGN SPACING A,B,C
25-35 MPH	200'
35-40 MPH	350'
45-55 MPH	500'

W3-4

USE OF THE "BE PREPARED TO STOP" SIGN IS OPTIONAL. WHEN USED, THIS SIGN SHALL BE LOCATED BETWEEN THE W20-7a AND W20-4 SIGNS. A 500' TYPICAL SPACING SHALL BE PROVIDED BETWEEN THE SIGNS.

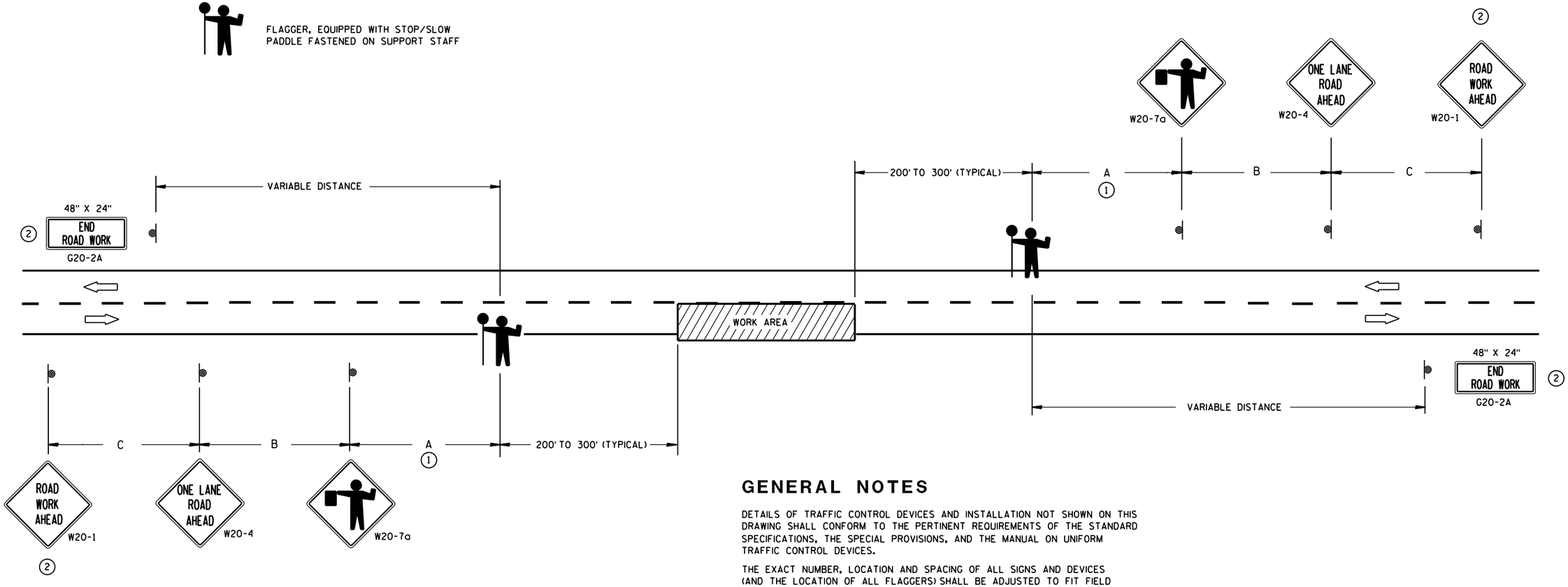

(1) FOR A MOVING WORK OPERATION,
SIGNING FOR BOTH DIRECTIONS SHALL BE REESTABLISHED (AS SIMULTANEOUSLY AS PRACTICAL) AT APPROXIMATELY 3500 FOOT INTERVALS IN THE MOVING WORK OPERATION OR AS APPROVED BY THE ENGINEER.

(2) SIGN NOT REQUIRED IF FLAGGING OPERATION OCCURS WITHIN A SIGNED ROAD WORK ZONE AREA.

GENERAL NOTES

DETAILS OF TRAFFIC CONTROL DEVICES AND INSTALLATION NOT SHOWN ON THIS DRAWING SHALL CONFORM TO THE PERTINENT REQUIREMENTS OF THE STANDARD SPECIFICATIONS, THE SPECIAL PROVISIONS, AND THE MANUAL ON UNIFORM TRAFFIC CONTROL DEVICES.

THE EXACT NUMBER, LOCATION AND SPACING OF ALL SIGNS AND DEVICES (AND THE LOCATION OF ALL FLAGGERS) SHALL BE ADJUSTED TO FIT FIELD CONDITIONS AS APPROVED BY THE ENGINEER.

THE FIRST ADVANCE WARNING SIGN SHOULD TYPICALLY BE LOCATED IN ADVANCE OF THE ANTICIPATED TRAFFIC BACKUP OR QUEUE.

WHEN A SIDE ROAD OR RAMP INTERSECTS THE FACILITY ON WHICH THE WORK IS BEING PERFORMED, ADDITIONAL TRAFFIC CONTROLS SHALL BE PROVIDED AS SPECIFIED IN THE PLANS AND/OR THE SPECIAL PROVISIONS OR AS APPROVED BY THE ENGINEER.

FLAGGERS SHALL BE IN SIGHT OF EACH OTHER OR IN DIRECT COMMUNICATION AT ALL TIMES. THEY SHALL BE EQUIPPED WITH STOP/SLOW PADDLES FASTENED ON SUPPORT STAFFS. WHEN THE FLAGGING OPERATION IS NOT IN EFFECT, COVER OR REMOVE ALL TEMPORARY TRAFFIC CONTROL SIGNS.

ALL SIGNS ARE 48" X 48" UNLESS OTHERWISE NOTED.

TRAFFIC CONTROL FOR LANE CLOSURE (SUITABLE FOR MOVING OPERATIONS)

STATE OF WISCONSIN
DEPARTMENT OF TRANSPORTATION

APPROVED
8/2013 — DATE
/S/ Travis Feltes — STATE TRAFFIC ENGINEER
FHWA

6

S.D.D. 15 C 12-4

6

S.D.D. 15 C 12-4

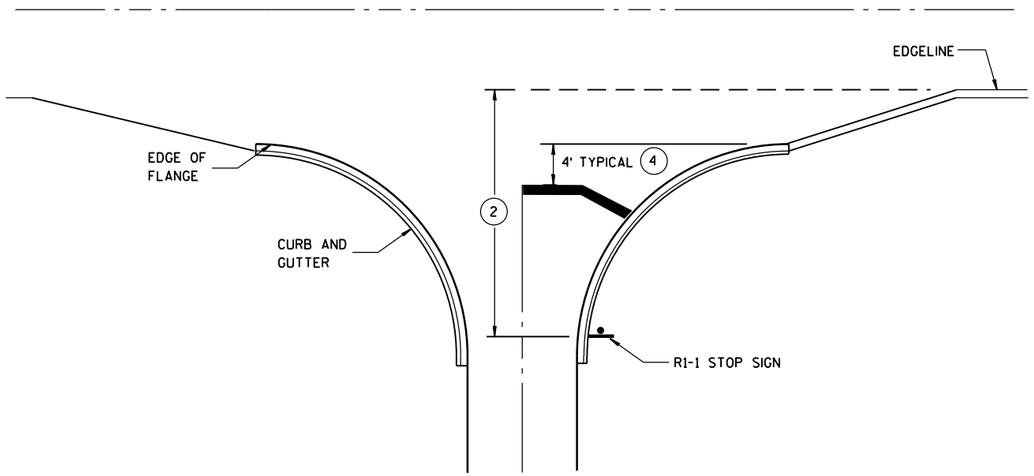

TYPICAL STOP LINE PAVEMENT MARKING WITH CURB AND GUTTER

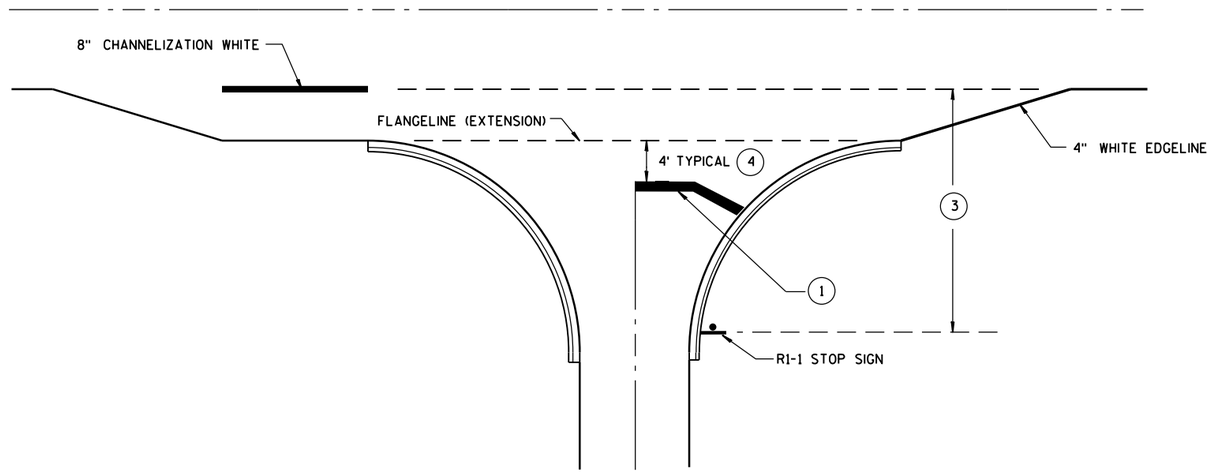

TYPICAL STOP LINE PAVEMENT MARKING FOR SIDEROADS WITH RIGHT TURN LANE

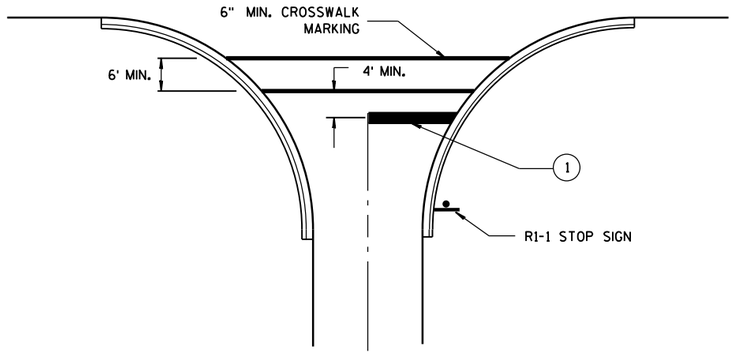

TYPICAL STOP LINE PAVEMENT MARKING FOR SIDEROADS WITH CROSSWALK MARKING

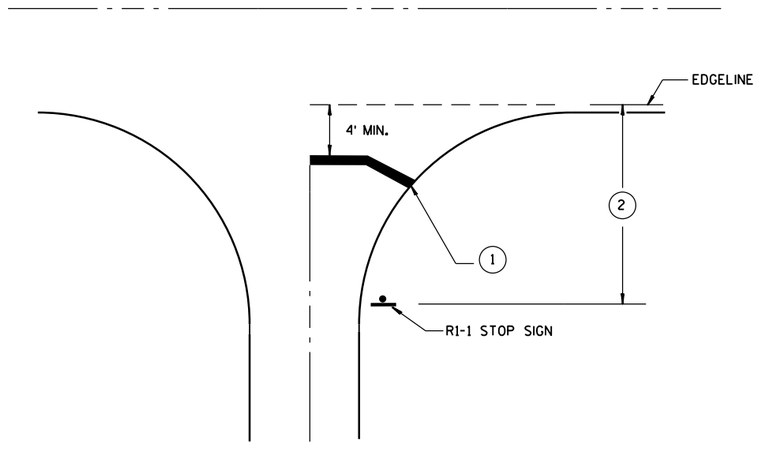

TYPICAL STOP LINE PAVEMENT MARKING WITHOUT CURB AND GUTTER

GENERAL NOTES

1. 18-INCH STOP LINES MAY BE DELETED OR ADDED BY THE PROJECT ENGINEER BASED ON VISIBILITY AND SIGHT LINES.
2. IF STOP SIGN IS LESS THAN OR EQUAL TO 40 FEET FROM THE EDGELINE THAN NO STOP LINE IS REQUIRED.
3. IF STOP SIGN IS LESS THAN OR EQUAL TO 30 FEET FROM THE FLANGELINE EXTENSION THAN NO STOP LINE IS REQUIRED.
4. MOVE CLOSER TO EDGE OF TRAVEL LANE AS NEEDED FOR VISIBILITY AND SIGHT LINES.

STOP LINE AND CROSSWALK PAVEMENT MARKING

STATE OF WISCONSIN
DEPARTMENT OF TRANSPORTATION

APPROVED

4/30/2013
DATE

/S/ Travis Feltes
STATE TRAFFIC E

FHWA

6

S.D.D. 15 C 33-1

WARNING OF LOCALIZED SIDEWALK WORK AREAS

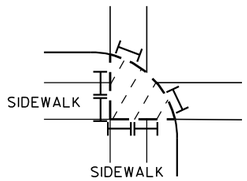

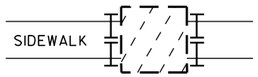

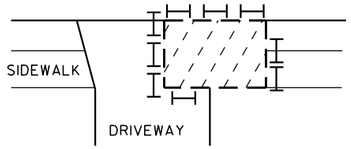

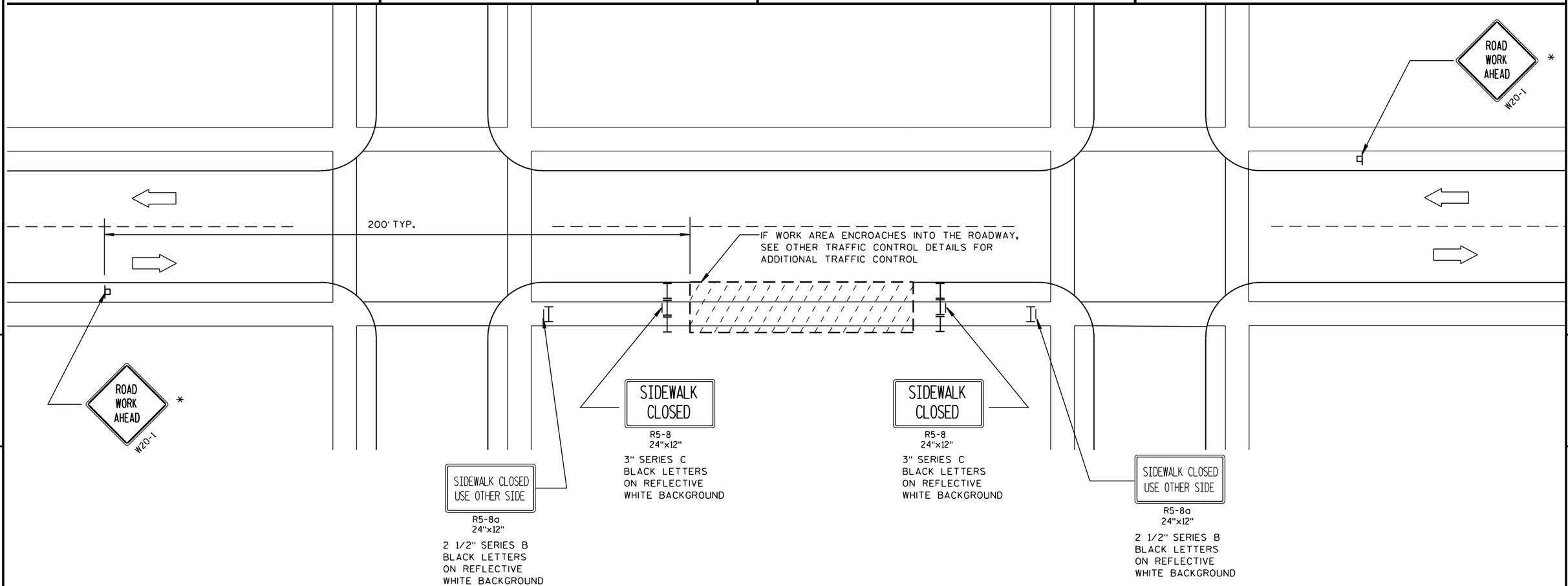

LEGEND

- POST MOUNTED SIGN
- TYPE II BARRICADE WITH/WITHOUT SIGN (ALL WITH ONE WARNING LIGHT, TYPE A, LOW-INTENSITY FLASHING)
- WORK AREA
- DIRECTION OF TRAFFIC FLOW

GENERAL NOTES :

ALL SIGNS ARE 48"x48" UNLESS OTHERWISE NOTED. IF NECESSARY DUE TO SPACE CONSTRAINTS, 36"x36" SIGNS MAY BE USED INSTEAD OF 48"x48" SIGNS, IF APPROVED BY DISTRICT TRAFFIC UNIT.

THE EXACT LOCATION AND PLACEMENT OF ALL SIGNS AND DEVICES SHALL BE ADJUSTED TO FIT FIELD CONDITIONS.

"WO" SIGNS ARE THE SAME AS "W" SIGNS EXCEPT THE BACKGROUND IS ORANGE.

* "ROAD WORK AHEAD" SIGNS ARE NOT REQUIRED IF THE SIDEWALK CLOSURE OCCURS WITHIN A LARGER WORK ZONE WHERE ADVANCE WARNING SIGNS ARE ALREADY PRESENT, OR IF THE WORK AREA AND EQUIPMENT ARE MORE THAN 2 FEET BEHIND THE CURB.

WARNING SIGNS THAT WILL BE IN PLACE LESS THAN 7 CONTINUOUS DAYS AND NIGHTS MAY BE MOUNTED ON PORTABLE SUPPORTS.

TRAFFIC CONTROL, SIDEWALK CLOSURE

TRAFFIC CONTROL, SIDEWALK CLOSURE

STATE OF WISCONSIN
DEPARTMENT OF TRANSPORTATION

APPROVED
5/23/2000 DATE
/S/ Chester J. [illegible]
CHIEF SIGNS AND MARK[illegible]NEER
FHWA

6

S.D.D. 15 D 30-1

NOTES

1. Sign Is Type II - Type H Reflective - reference WIS DOT Standard Specification for HIGHWAY and STRUCTURE CONSTRUCTION latest edition.
2. Color:
   Background - GREEN
   Message - WHITE
3. Message Series - As Shown

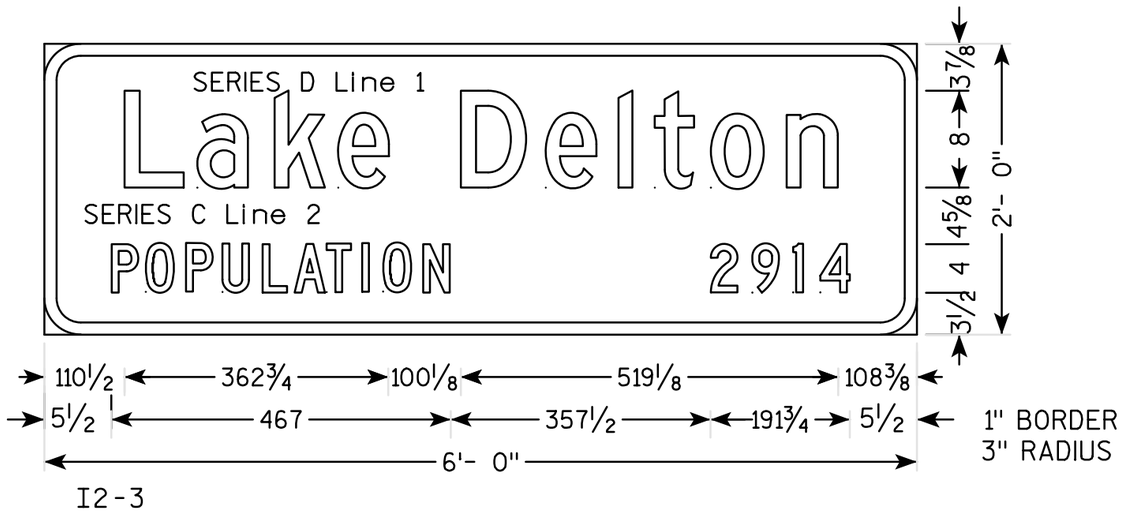

I2-3

PROJECT NO: 1674-00-70	HWY: US 12	COUNTY: SAUK	SIGNING DETAILS	SHEET 136	E

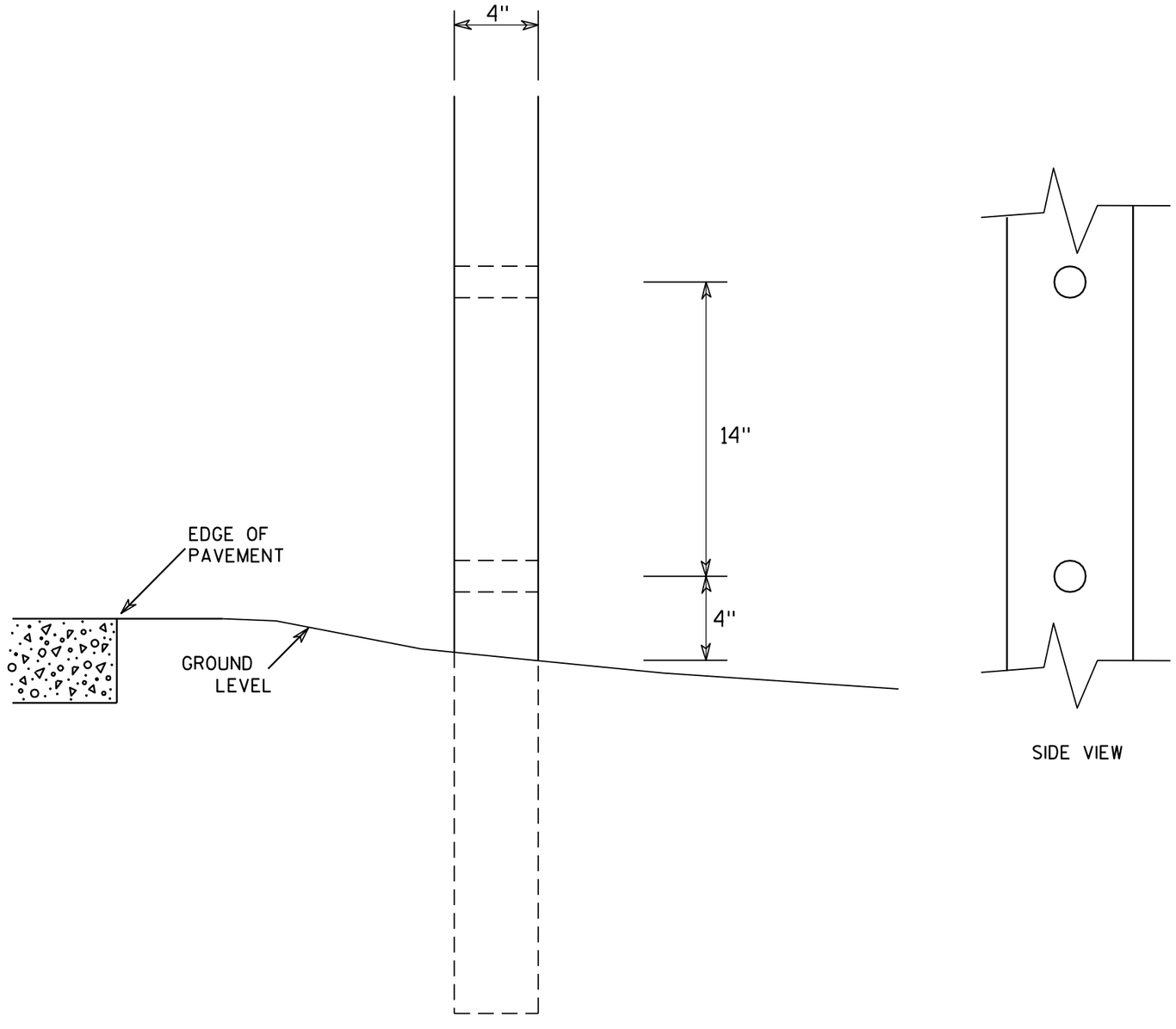

SIDE VIEW

GENERAL NOTES

1. All 4 x 6 Wood Posts shall be modified by having two 1½" diameter holes drilled perpendicular to the roadway centerline.

7

7

4 X 6 WOOD POST MODIFICATIONS

WISCONSIN DEPT OF TRANSPORTATION

APPROVED Chester J Spang for State Traffic Engineer

DATE 3/27/97 PLATE NO. A4-11.2

PROJECT NO:	HWY:	COUNTY:		SHEET NO: 137	E

URBAN AREA

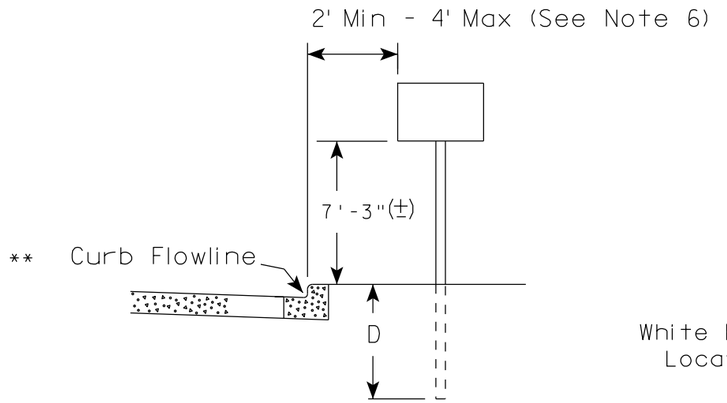

RURAL AREA (See Note 2)

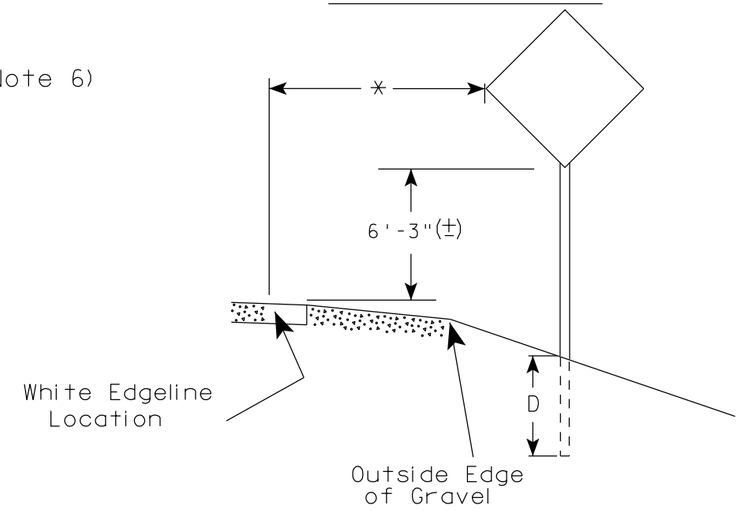

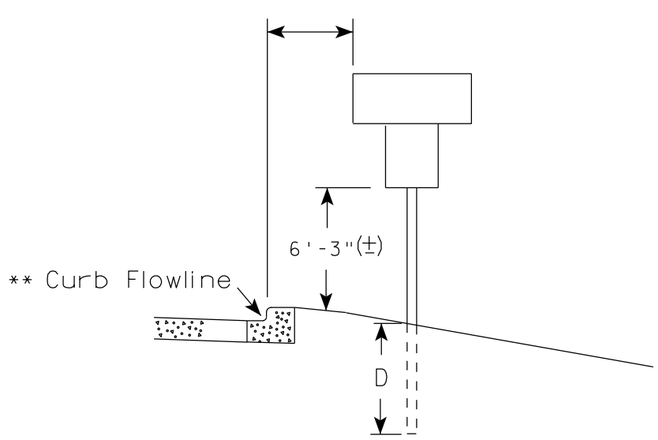

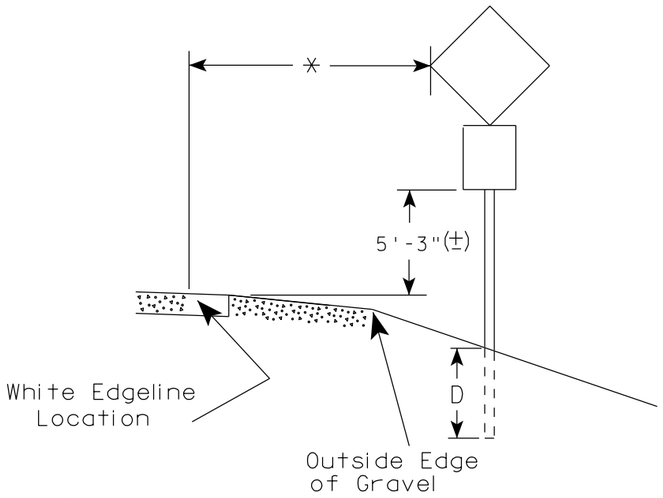

** The existence of curb and gutter does not in itself mandate the vertical clearance illustrated. That height is typically measured where there is sidewalk adjacent to the roadway or parking is permitted. In the absence of sidewalk vertical clearance is measured from the top of the curb. Offset of signs is measured from the flow line.

* 6 feet from edge of a paved shoulder or 12 feet from the edge of pavement (edge line location) or 2 feet from outside edge of gravel, whichever is greater unless directed by project engineer.

GENERAL NOTES

1. Signs wider than 4 feet, 20 sq.ft or larger, shall be mounted on multiple posts. Refer to plate A4-4.
2. If signs are mounted on barrier wall, see A4-10 sign plate.
3. For expressways and freeways, mounting height is 7'- 3" (±) or 6'-3" (±) depending upon existence of a sub-sign.
4. Minimum mounting height for J assemblies (A4-5) is 7'-3" (±) or 6'-3" (±) per urban or rural detail respectively.
5. Minimum mounting height for signs mounted on traffic signal poles is 5'- 3" (±).
6. Offset distance shall be consistent with existing signs or consistent throughout length of project.
7. The (±) tolerance for mounting height is 3 inches.
8. Folding stop signs (R1-1F) shall be mounted at a height of 5'-3" (±) or as directed by the Engineer.
9. The Double Arrow sign (W12-1) shall be mounted at a height of 2'-3" (±). The Chevron sign (W1-8), Roundabout Chevron panel (R6-4B), Enhanced Reference Markers, Clearance Markers (W5-52), Mile Markers (D10 series) & End of Rod Markers (W5-56 & W5-56A) shall be mounted at a height of 4'-3" (+).

POST EMBEDMENT DEPTH

Area of Sign Installation (Sq. Ft.)	D (Min)
20 or Less	4'
Greater than 20	5'

TYPICAL INSTALLATION OF PERMANENT TYPE II SIGNS ON SINGLE POSTS

WISCONSIN DEPT OF TRANSPORTATION

APPROVED Matthew R Rauch
for State Traffic Engineer

DATE 9/30/13 PLATE NO. A4-3.18

PROJECT NO:	HWY:	COUNTY:		SHEET NO:	E

7

7

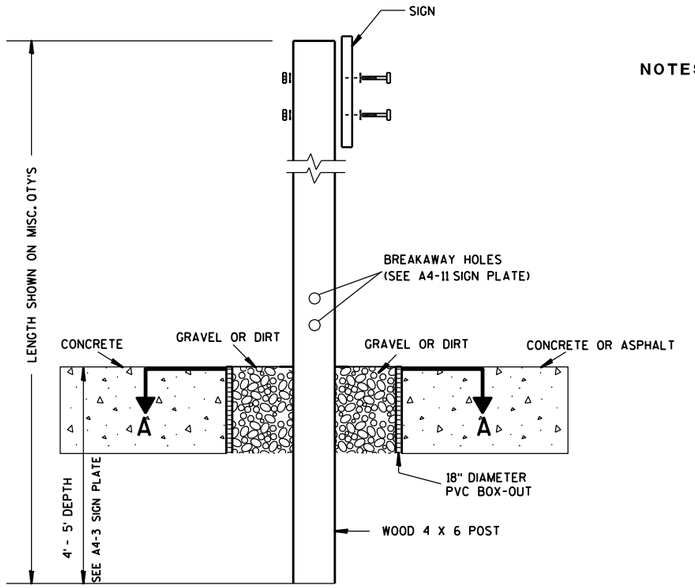

ELEVATION VIEW

DETAIL OF WOOD 4 X 6 SIGN POST IN BOX-OUT

NOTES:
1. ALL MATERIAL TO BE APPROVED BY ENGINEER PRIOR TO INSTALLATION
2. SEE SIGN PLATE A4-8 FOR SIGN HARDWARE REQUIREMENTS
3. 18 INCH X 18 INCH SQUARE BOX-OUTS MAY BE USED FOR INSTALLATIONS IN EXISTING CONCRETE OR ASPHALT LOCATIONS.

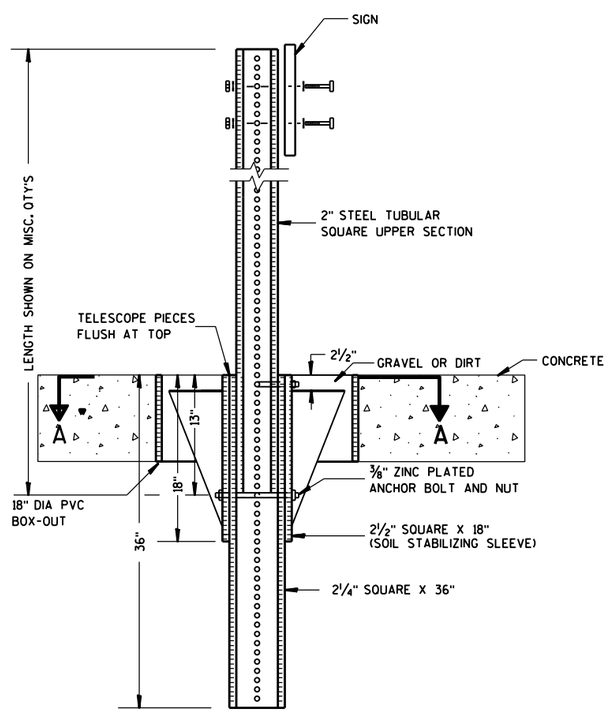

ELEVATION VIEW

DETAIL OF STEEL 2 X 2 SIGN POST IN BOX-OUT

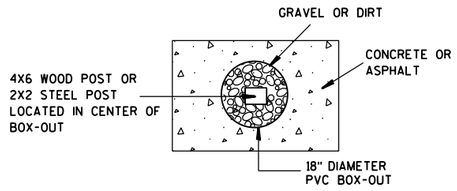

PLAN VIEW

FOR NEW CONCRETE/ASPHALT INSTALLATIONS

SIGN POST BOX-OUTS A4-3B

WISCONSIN DEPT OF TRANSPORTATION

APPROVED Matthew R Rauch
for State Traffic Engineer

DATE 1/27/14 PLATE NO. A4-3B.1

PROJECT NO:	HWY:	COUNTY:		SHEET NO:	E

FILE NAME : C:\CAEFiles\Projects\tr_stdplate\A43B.DGN PLOT DATE : 27-JAN-2014 09:48 PLOT BY : mscsja PLOT NAME : PLOT SCALE : 13.659812:1.000000 WISDOT/CADDS SHEET 42

URBAN AREA

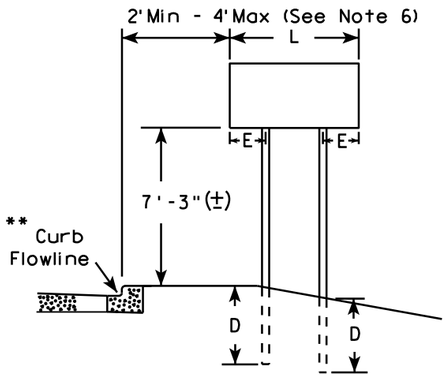

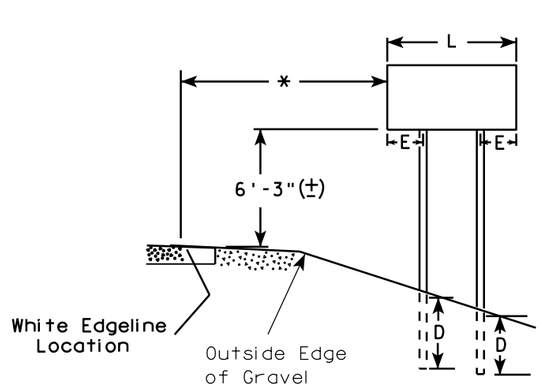

RURAL AREA (See Note 3)

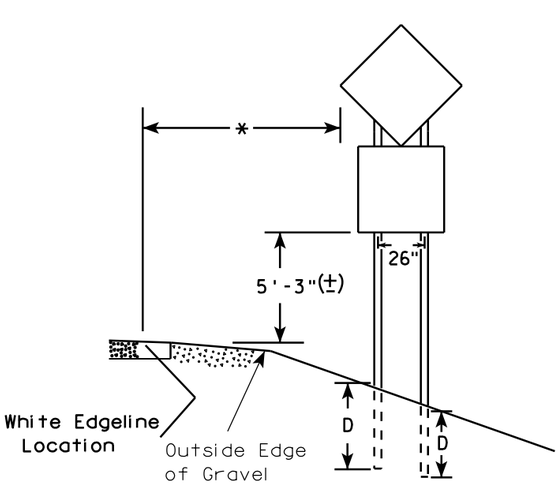

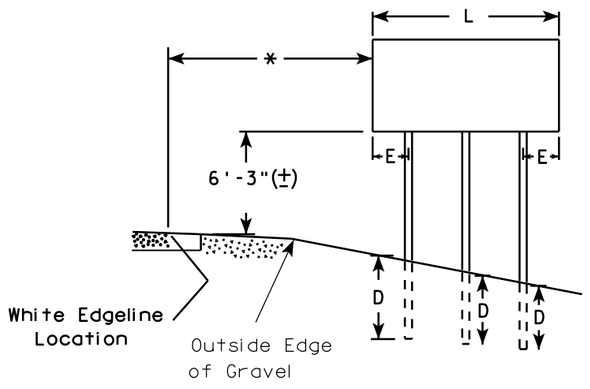

48" DIAMOND WARNING SIGN

48" DIAMOND WARNING SIGN

GENERAL NOTES

1. For 3 or 4 post installations, individual post spacing shall be greater than 3'-6".
2. See tables below for required number of posts.
3. For expressways and freeways, mounting height is 7'-3" (±) or 6'-3" (±) depending upon existence of sub-sign.
4. The (±) tolerance for mounting height is 3 inches.
5. Minimum mounting height for J assemblies (A4-5) is 7'-3" (±) or 6'-3" (±) per urban or rural detail respectively.
6. Offset distance shall be consistent with existing signs or consistent throughout length of project.
7. Folding stop signs (R1-1F) shall be mounted at a height of 5'-3" (±) or as directed by the engineer.
8. The Double Arrow sign (W12-1) shall be mounted at a height of 2'-3" (±). The Chevron sign (W1-8), Roundabout Chevron panel (R6-4B), Clearance Markers (W5-52), Mile Markers (D10 series) & End of Road Markers (W5-56 & W5-56A) shall be mounted at a height of 4"-3" (±).

* 6 feet from edge of a paved shoulder or 12 feet from the edge of pavement (edge line location) or 2 feet from outside edge of gravel, whichever is greater unless directed by project engineer.

** The existence of curb and gutter does not in itself mandate the vertical clearance illustrated. That height is typically measured where there is sidewalk adjacent to the roadway or parking is permitted. In the absence of sidewalk vertical clearance is measured from the top of the curb. Offset of signs is measured from the flow line.

*** See A4-3 sign plate for signs 4' or less in width or 20 S.F. or less in area.

***

SIGN SHAPE OTHER THAN DIAMOND (TWO POSTS REQUIRED)	
L	E
Greater than 48" Less than 60"	12"
60" to 120"	L/5

SIGN SHAPE OTHER THAN DIAMOND (THREE POSTS REQUIRED)	
L	E
Greater than 120" less than 168"	12"

SIGN SHAPE OTHER THAN DIAMOND (FOUR POSTS REQUIRED)	
L	E
168" and greater	12"

POST EMBEDMENT DEPTH

Area of Sign Installation (Sq. Ft.)	D (Min)
20 or Less	4'
Greater than 20	5'

TYPICAL INSTALLATION OF TYPE II SIGNS ON MULTIPLE POSTS

WISCONSIN DEPT OF TRANSPORTATION

APPROVED Matthew R Rauch
for State Traffic Engineer

DATE 9/30/13 PLATE NO. A4-4 12

140

PROJECT NO:	HWY:	COUNTY:		SHEET NO:	E

FILE NAME : C:\CAEfiles\Projects\tr_stdplate\A44.DGN PLOT DATE : 30-SEP-2013 13:27 PLOT BY : mscj9h PLOT NAME : PLOT SCALE : 107.021305:1.000000

WISDOT/CADDS SHEET 42

7 7

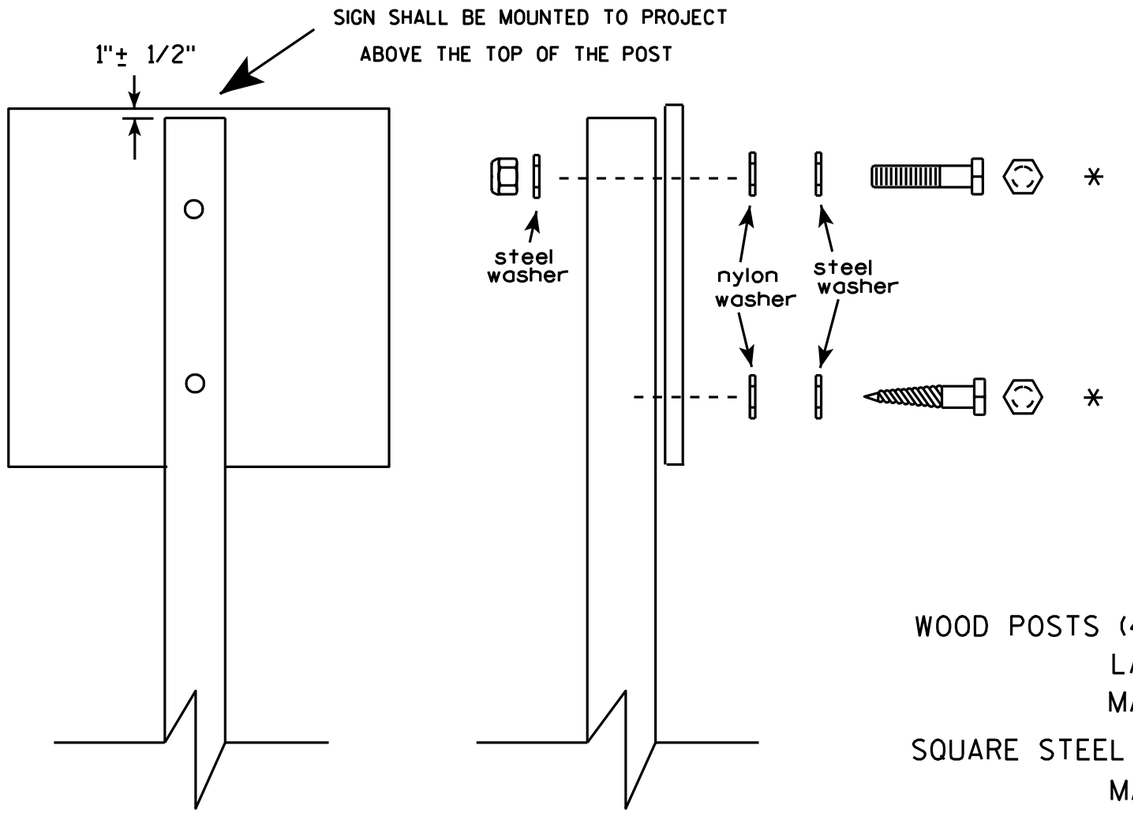

Nuts, bolts and lags used for mounting signs shall have hexagonal heads and shall be either :

a. Hot dip galvanized in accordance with ASTM Designation: A 153, Class D, or SC 3

b. Electro-galvanized in accordance with ASTM Designation : B 633, TYPE III, SC 3.

Threads on bolts and nuts shall be manufactured with sufficient allowance for the cadmium plate or galvanized coating to permit the nuts to run freely on the bolts.

WOOD POSTS (4" x 4" or 4" x 6")
LAG SCREWS - 3/8" X 3"
MACHINE BOLTS - 5/16" X 6-1/2" or 7" Length w/ nuts

SQUARE STEEL POSTS (2" x 2")
MACHINE BOLTS - 3/8" X 3-1/4" Length w/ nuts
RIVETS - 9/32 " (6605-9-6) BULB-TITE, TRI-FOLD, ALUMINUM BODY/MANDREL
O.D. FLANGE .720-.765 INCH, GRIP RANGE .042-.375 INCH

WASHERS (ALL POSTS) -
1-1/4" O.D. X 3/8" I.D. X 1/16" STEEL
1-1/4" O.D. X 3/8" I.D. X .080 NYLON for all Type H signs.

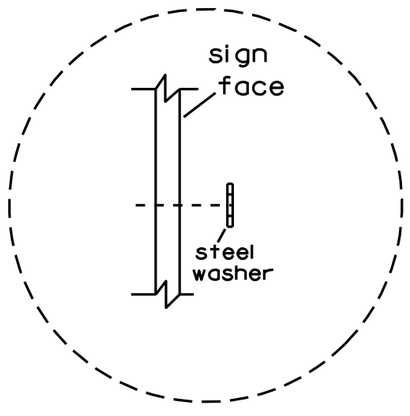

Washer Placement when Sign Has Other Than Type H or Type F Face

* Two different fastening systems are shown for illustration purposes. On any individual sign, either one or the other system shall be used. Actual number of fasteners per sign varies with the sign area, but normally there are two. For a single post installation, all signs greater than 9 sq. ft. require the use of 3 fasteners.

ATTACHMENT OF SIGNS TO POSTS

WISCONSIN DEPT OF TRANSPORTATION

APPROVED Matthew R Rauch
for State Traffic Engineer

DATE 3/23/10 PLATE NO. A4-8.7

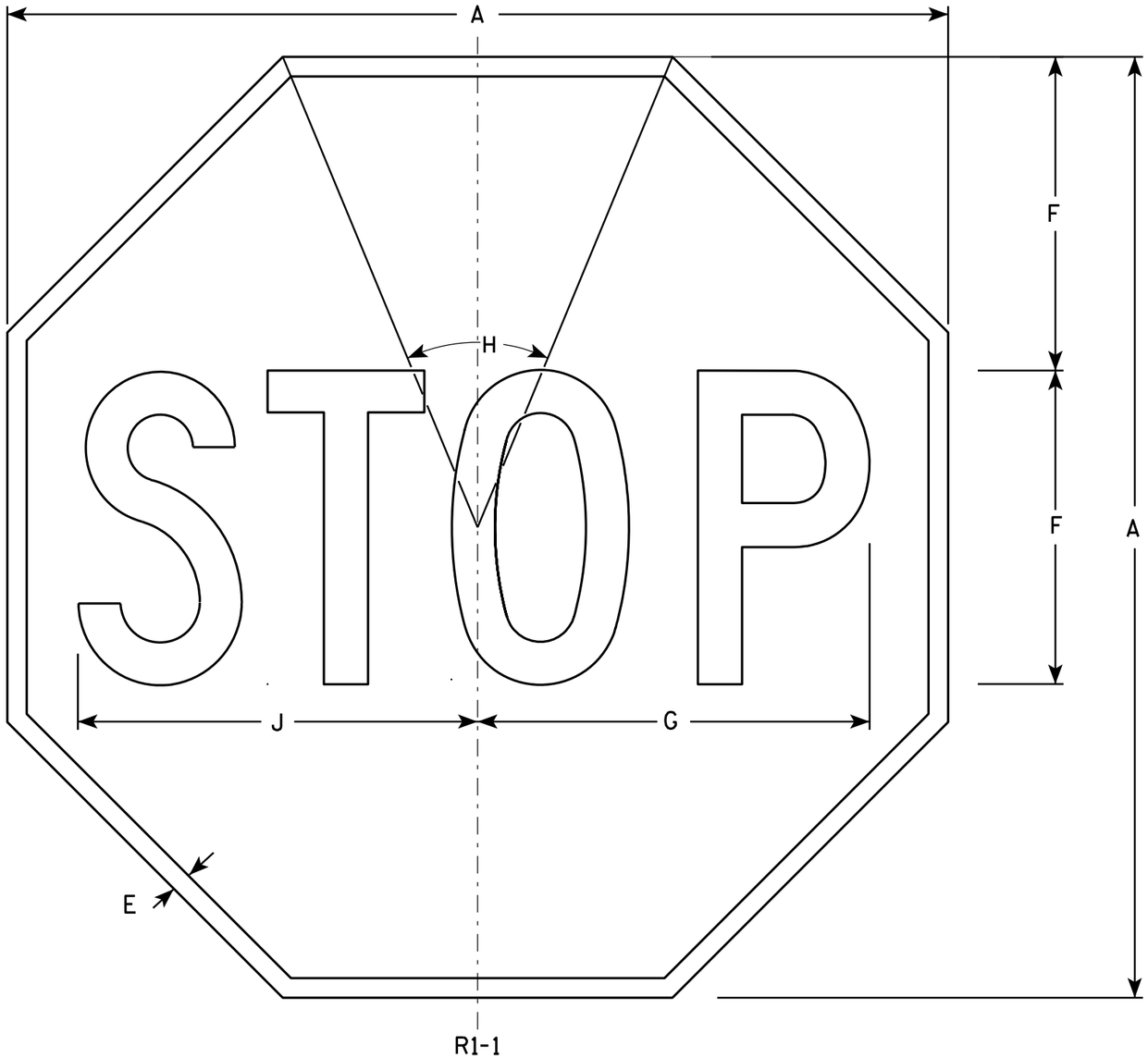

NOTES

1. Sign is Type II - Type H Reflective - reference WIS DOT Standard Specification for HIGHWAY and STRUCTURE CONSTRUCTION latest edition.
2. Color:
   Background - Red
   Message - White
3. Message Series - C

SIZE	A	B	C	D	E	F	G	H	I	J	K	L	M	N	O	P	Q	R	S	T	U	V	W	X	Y	Z	Area sq. ft.
1	24				3/8	8	10	45°		10 1/4																	3.31
2S	30				5/8	10	12 1/2	45°		12 3/4																	5.18
2M	36				3/4	12	15	45°		15 3/8																	7.46
3	36				3/4	12	15	45°		15 3/8																	7.46
4	48				1	16	20	45°		20 1/2																	13.25
5	48				1	16	20	45°		20 1/2																	13.25
6	18				3/8	6	7 3/4	45°		7 3/4																	1.86
7	12				1/4	4	5	45°		5 1/8																	0.78

STANDARD SIGN
R1-1

WISCONSIN DEPT OF TRANSPORTATION

APPROVED Matthew R Rauch
for State Traffic Engineer

DATE 12/03/10 PLATE NO. R1-1.12

PROJECT NO:	HWY:	COUNTY:		SHEET NO: 142	E

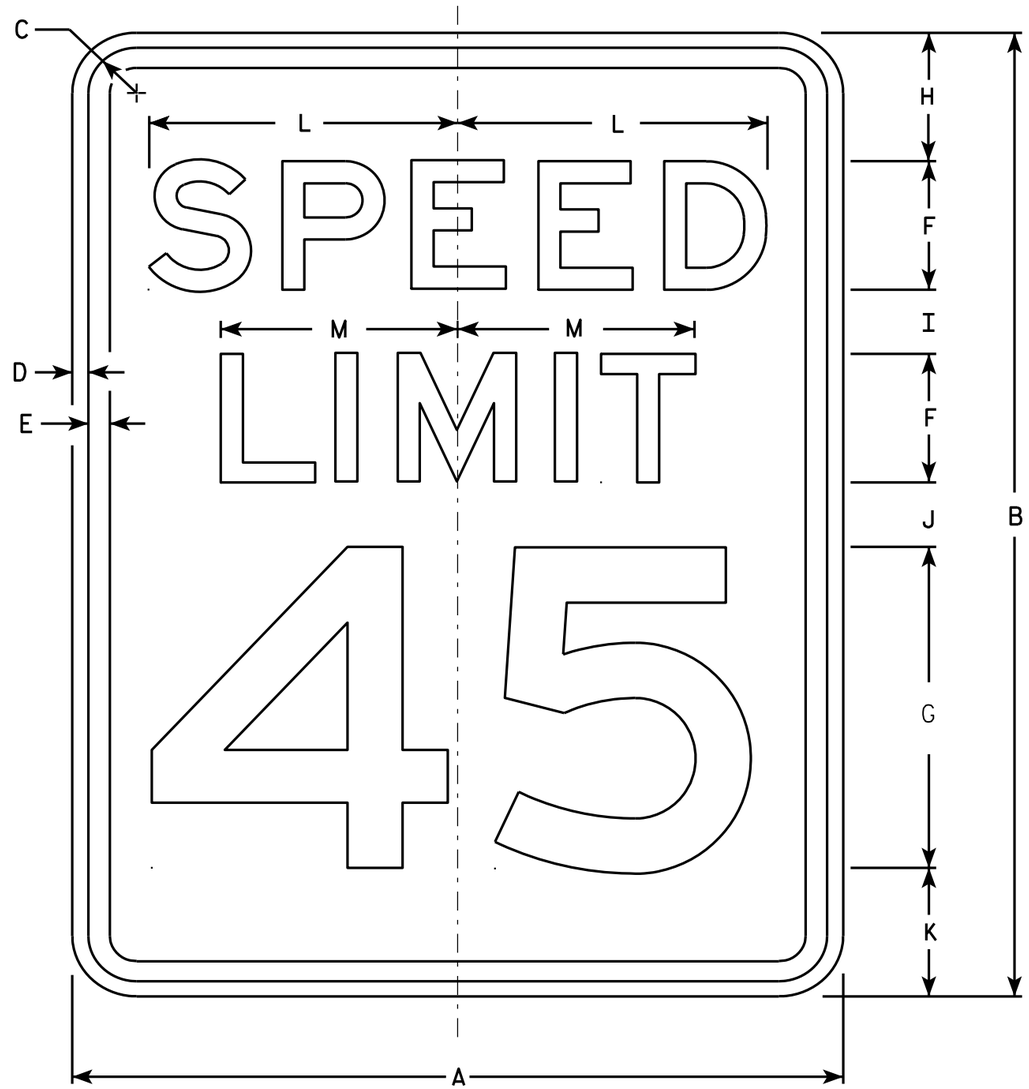

R2-1

NOTES

1. Sign is Type II - Type H Reflective - reference WIS DOT Standard Specification for HIGHWAY and STRUCTURE CONSTRUCTION latest edition.
2. Color:
   Background - White
   Message - Black
3. Message Series - E
4. Corners may be square or rounded when base material is plywood but borders shall be rounded as shown. When base material is metal, the corners and borders shall be rounded.
5. Substitute appropriate numerals and optically adjust spacing to achieve proper balance.

SIZE	A	B	C	D	E	F	G	H	I	J	K	L	M	N	O	P	Q	R	S	T	U	V	W	X	Y	Z	Area sq. ft.
1	18	24	1 1/8	3/8	1/2	3	8	3	2	2	3	7 1/4	5 1/2														3.0
2S	24	30	1 1/8	3/8	1/2	4	10	3	2 1/4	3 3/8	3 3/8	9 5/8	7 3/8														5.0
2M	30	36	1 3/8	1/2	5/8	5	12	5	2 1/2	2 1/2	4	12	9 1/4														7.5
3	36	48	1 3/8	1/2	5/8	6	14	6	5	5	6	14 3/8	11														12.0
4	36	48	1 3/8	1/2	5/8	6	14	6	5	5	6	14 3/8	11														12.0
5	48	60	2 1/4	3/4	1	8	20	6	4 1/2	6 3/4	6 3/4	19 1/4	14 5/8														20.0

STANDARD SIGN
R2-1

WISCONSIN DEPT OF TRANSPORTATION

APPROVED Matthew R Rauch
for State Traffic Engineer

DATE 5/26/10 PLATE NO. R2-1.13

PROJECT NO: | HWY: | COUNTY: | SHEET NO: 143 | E

FILE NAME : C:\Users\PROJECTS\tr_stdplate\R21.DGN PLOT DATE : 28-MAY-2010 08:32 PLOT BY : ditjph PLOT NAME : PLOT SCALE : 4.717577:1.000000
WISDOT/CADDS SHEET 42

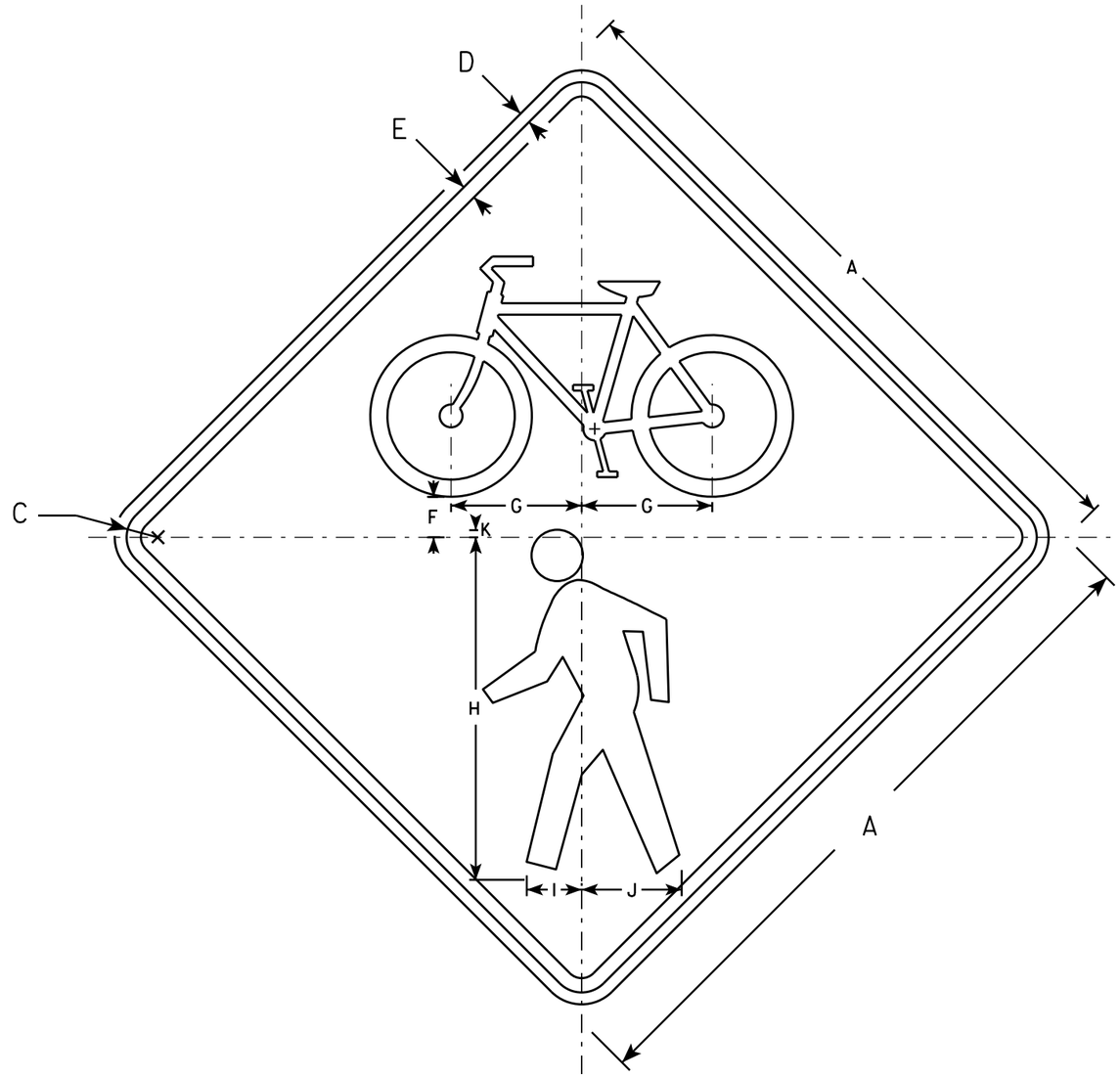

W11-15

NOTES

1. Sign is Type II - Type F Reflective
2. Color:
   Background - Yellow
   Message - Black
3. Corners may be square or rounded when base material is plywood but borders shall be rounded as shown. When base material is metal, the corners and borders shall be rounded.

SIZE	A	B	C	D	E	F	G	H	I	J	K	L	M	N	O	P	Q	R	S	T	U	V	W	X	Y	Z	Area sq. ft.
1	24		1 1/8	3/8	1/2	1 3/8	4 5/8	12	1 7/8	3 1/2	1/4																4.0
2S	30		1 3/8	1/2	5/8	1 3/4	5 3/4	15	2 3/8	4 3/8	3/8																6.25
2M	36		1 5/8	5/8	3/4	2 1/8	6 7/8	18	2 7/8	5 1/4	3/8																9.0
3	36		1 5/8	5/8	3/4	2 1/8	6 7/8	18	2 7/8	5 1/4	3/8																16.0
4	48		2 1/4	3/4	1	2 7/8	9 1/8	24	3 7/8	7	1/2																16.0
5																											

STANDARD SIGN
W11-15

WISCONSIN DEPT OF TRANSPORTATION

APPROVED Matthew R Rauch for State Traffic Engineer

DATE 2/13/14 PLATE NO W11-15.4

PROJECT NO: | HWY: | COUNTY: | SHEET NO: E

FILE NAME : C:\CAEFiles\Projects\tr_stdplate\W1115.DGN PLOT DATE : 13-FEB-2014 10:54 PLOT BY : mscsja PLOT NAME : PLOT SCALE : 7.783368:1.000000
WISDOT/CADDS SHEET 42

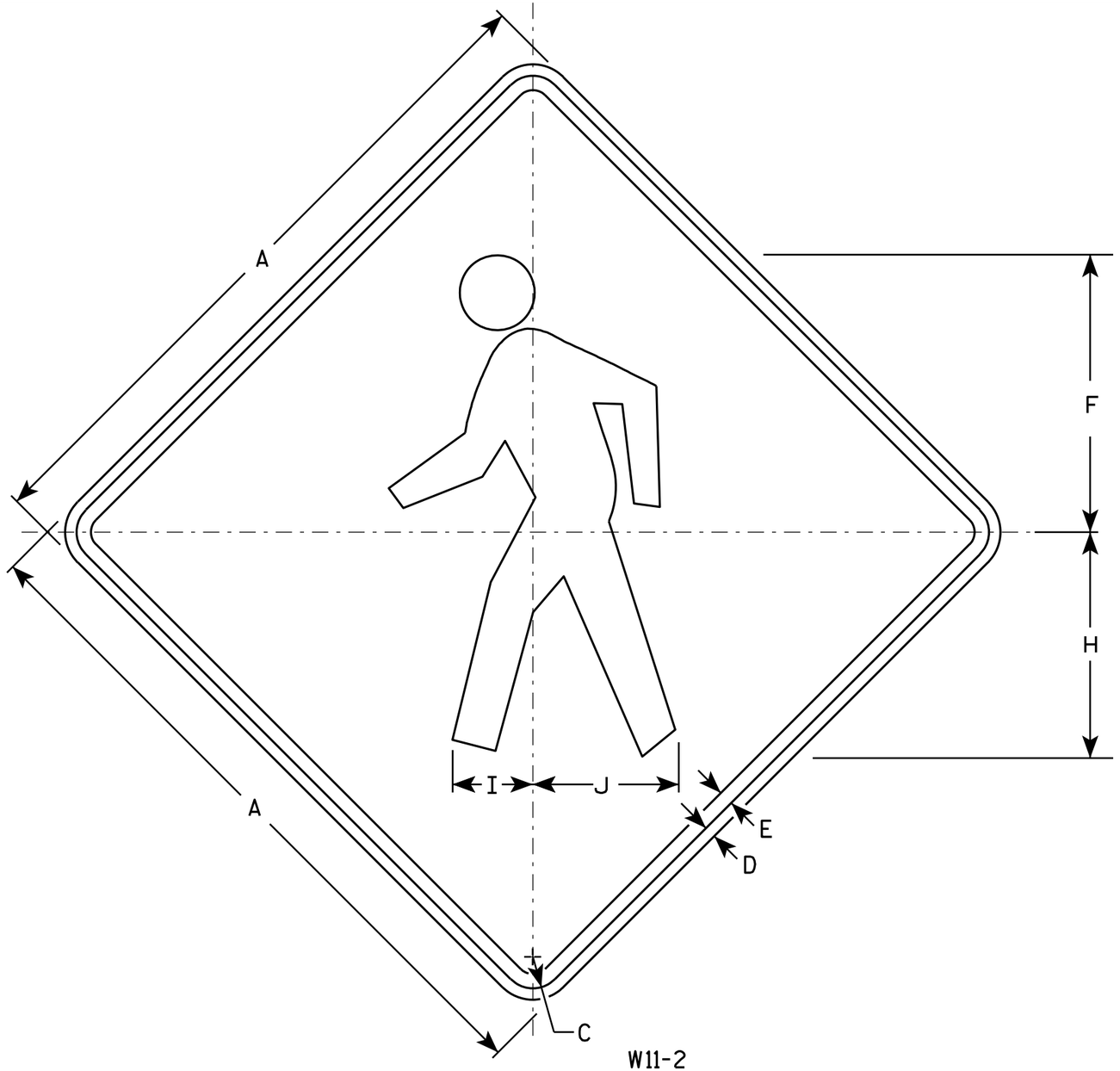

W11-2

NOTES

1. Sign is Type II - Type F Reflective - reference WIS DOT Standard Specification for HIGHWAY and STRUCTURE CONSTRUCTION latest edition.
2. Color:
   Background - Yellow
   Message - Black
3. Corners may be square or rounded when base material is plywood but borders shall be rounded as shown. When base material is metal, the corners and borders shall be rounded.

SIZE	A	B	C	D	E	F	G	H	I	J	K	L	M	N	O	P	Q	R	S	T	U	V	W	X	Y	Z	Area sq. ft.
1	24		1 1/8	3/8	1/2	9 3/4		7 7/8	2 7/8	5 1/8																	4.0
2S	30		1 3/8	1/2	5/8	12 1/8		9 7/8	3 1/2	6 3/8																	6.25
2M	36		1 5/8	5/8	3/4	14 1/2		11 7/8	4 1/4	7 5/8																	9.0
3	36		1 5/8	5/8	3/4	14 1/2		11 7/8	4 1/4	7 5/8																	9.0
4	48		2 1/4	3/4	1	19 3/8		15 3/4	5 5/8	10 1/4																	16.0
5																											

STANDARD SIGN
W11-2

WISCONSIN DEPT OF TRANSPORTATION

APPROVED Matthew R Rauch
for State Traffic Engineer

DATE 6/7/10 PLATE NO. W11-2.7

PROJECT NO:	HWY:	COUNTY:		SHEET NO: 145	E

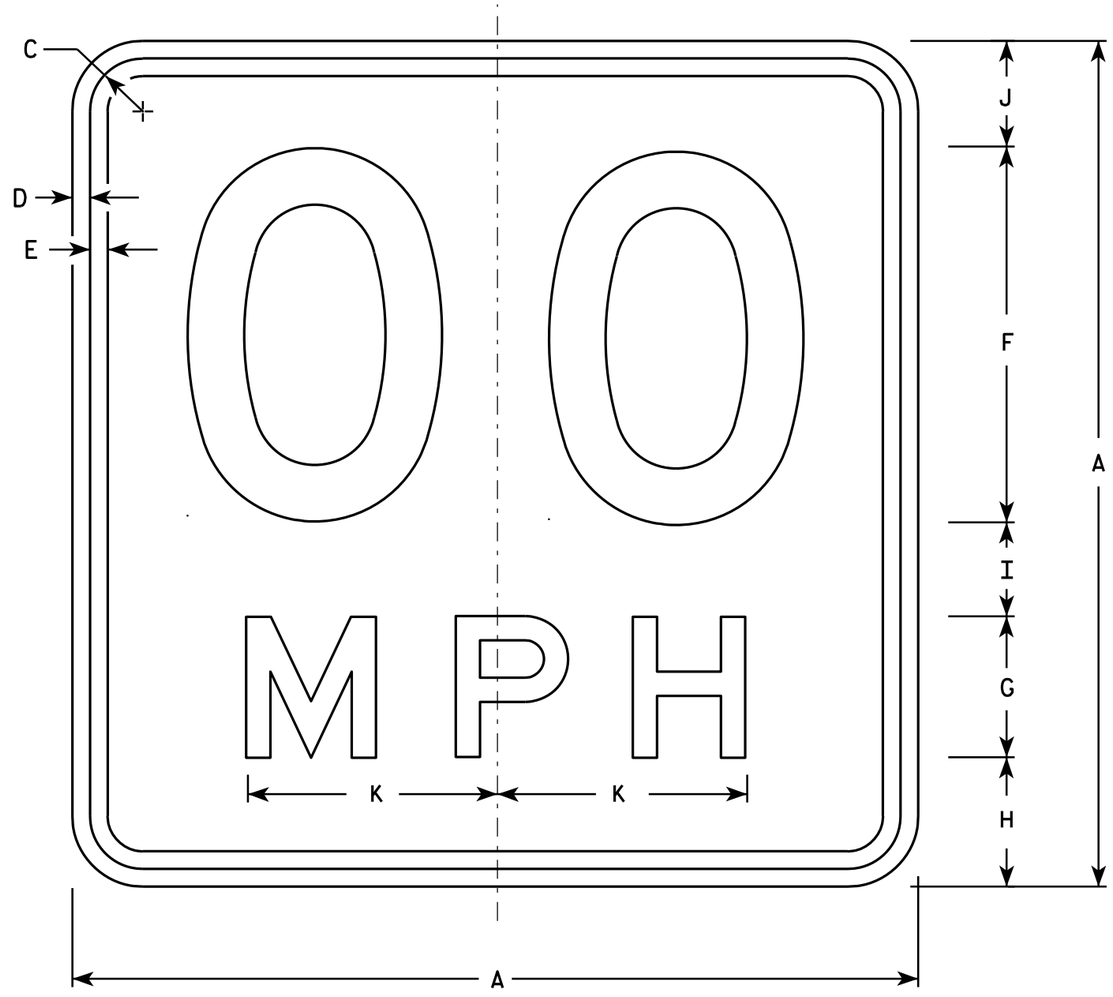

W13-1

* For 30" x 30" Warning Signs, use 18" x 18" W13-1 signs.
For 36" x 36" Warning Signs, use 24" x 24" W13-1 signs.

NOTES

1. Sign is Type II - Type F Reflective - reference WIS DOT Standard Specification for HIGHWAY and STRUCTURE CONSTRUCTION latest edition.
2. Color:
   Background - Yellow
   Message - Black
3. Message Series - See Note 6
4. Corners may be square or rounded when base material is plywood but borders shall be rounded as shown. When base material is metal, the corners and borders shall be rounded.
5. Substitute appropriate numerals and optically space about centerline to achieve proper balance.
6. Line 1 is Series D
   Line 2 is Series E

	SIZE	A	B	C	D	E	F	G	H	I	J	K	L	M	N	O	P	Q	R	S	T	U	V	W	X	Y	Z	Area sq. ft.
	1	18		1 1/8	3/8	3/8	8	3	2 3/4	2	2 1/4	5 3/8																2.25
*	2S	18		1 1/8	3/8	3/8	8	3	2 3/4	2	2 1/4	5 3/8																2.25
*	2M	18		1 1/8	3/8	3/8	8	3	2 3/4	2	2 1/4	5 3/8																2.25
	3	24		1 1/8	3/8	1/2	10	4	4	2 3/4	3 1/4	6 5/8																4.00
	4	36		1 5/8	5/8	3/4	16	6	5 1/2	4	4 1/2	10 5/8																9.00
	5	36		1 5/8	5/8	3/4	16	6	5 1/2	4	4 1/2	10 5/8																9.00

STANDARD SIGN
W13-1

WISCONSIN DEPT OF TRANSPORTATION

APPROVED Matthew R Rauch
For State Traffic Engineer

DATE 5/31/12 PLATE NO. W13-1.16

PROJECT NO: | HWY: | COUNTY: | SHEET NO: 146 | E

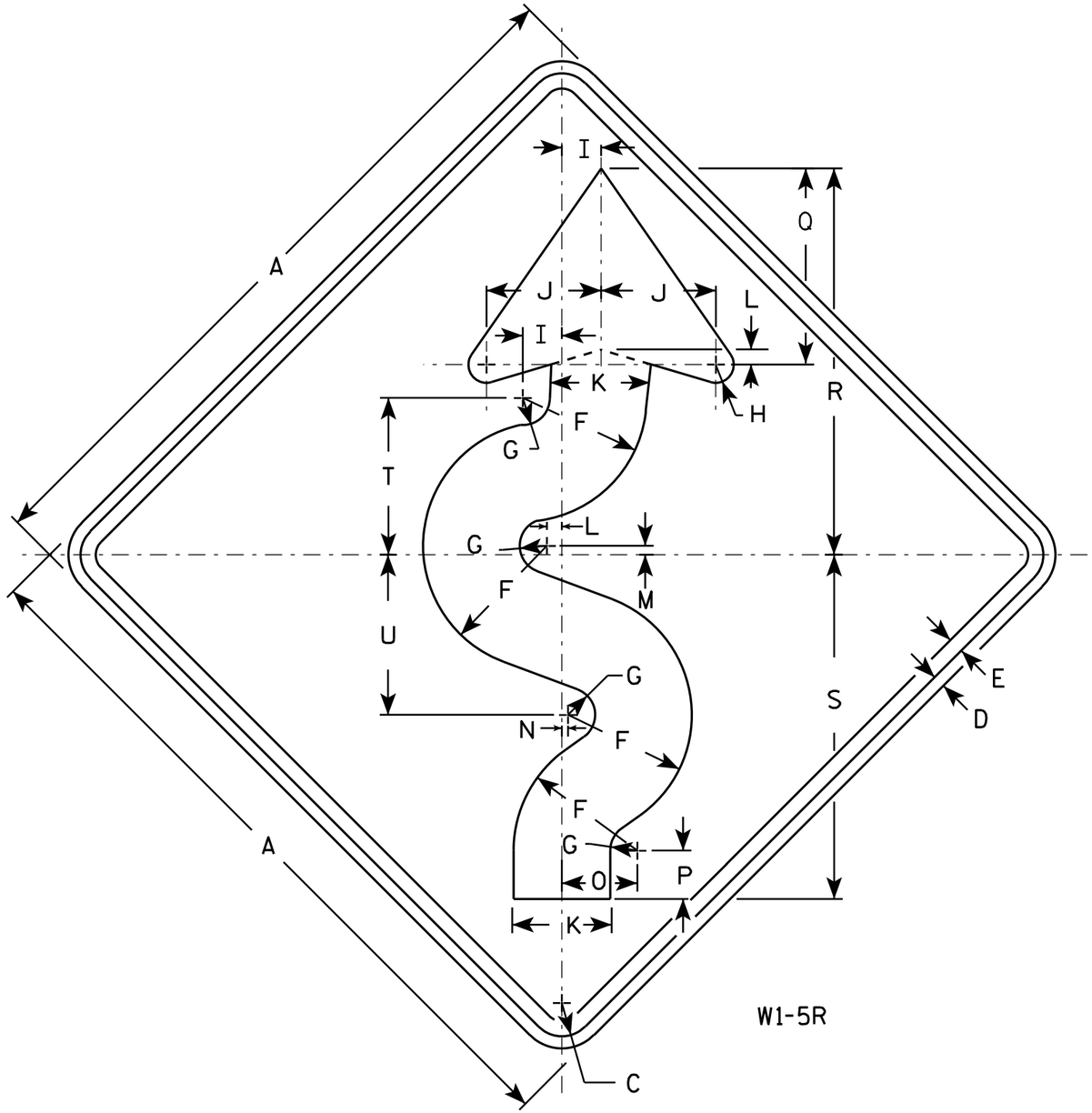

W1-5R

NOTES

1. Sign is Type II - Type F Reflective - reference WIS DOT Standard Specification for HIGHWAY and STRUCTURE CONSTRUCTION latest edition.
2. Color:
   Background - Yellow
   Message - Black
3. Corners may be square or rounded when base material is plywood but borders shall be rounded as shown. When base material is metal, the corners and borders shall be rounded.
4. W1-5L is the same as W1-5R except the arrow is reversed along the vertical centerline.

SIZE	A	B	C	D	E	F	G	H	I	J	K	L	M	N	O	P	O	R	S	T	U	V	W	X	Y	Z	Area sq. ft.
1	24		1 1/8	3/8	1/2	4 1/8	7/8	5/8	1 1/4	3 3/4	3 1/4	1/2	1/4	1/8	2 1/2	1 5/8	6 1/2	12 3/4	11 3/8	5 1/4	5 1/4						4.0
2S	30		1 3/8	1/2	5/8	5 1/8	1 1/8	3/4	1 5/8	4 3/4	4 1/8	5/8	3/8	1/4	3 1/8	2	8 1/8	16	14 1/4	6 1/2	6 5/8						6.25
2M	36		1 5/8	5/8	3/4	6 1/4	1 3/8	1	1 7/8	5 5/8	4 7/8	3/4	3/8	1/4	3 3/4	2 7/8	9 3/4	19 1/8	17 1/8	7 3/4	7 7/8						9.0
3	36		1 5/8	5/8	3/4	6 1/4	1 3/8	1	1 7/8	5 5/8	4 7/8	3/4	3/8	1/4	3 3/4	2 7/8	9 3/4	19 1/8	17 1/8	7 3/4	7 7/8						9.0
4	36		1 5/8	5/8	3/4	6 1/4	1 3/8	1	1 7/8	5 5/8	4 7/8	3/4	3/8	1/4	3 3/4	2 7/8	9 3/4	19 1/8	17 1/8	7 3/4	7 7/8						9.0
5	48		2 1/4	3/4	1	8 1/4	1 3/4	1 1/4	2 1/2	7 1/2	6 1/2	1	1/2	3/8	5	3 1/4	13	25 1/2	22 3/4	10 3/8	10 1/2						16.0

STANDARD SIGN
W1-5

WISCONSIN DEPT OF TRANSPORTATION

APPROVED Matthew R Rauch for State Traffic Engineer

DATE 5/18/12 PLATE NO. W1-5.8

PROJECT NO: | HWY: | COUNTY: | SHEET NO: 147 | E

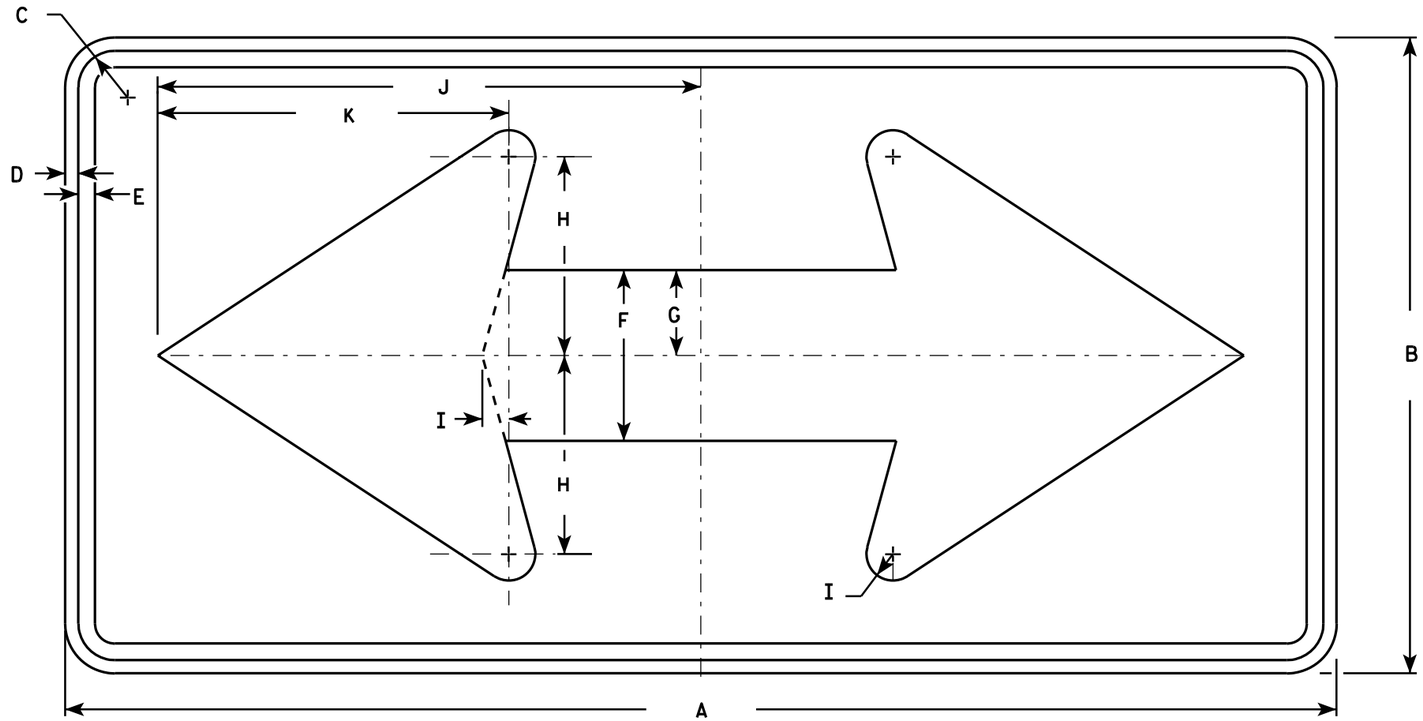

W1-7

NOTES

1. Sign is Type II - Type F Reflective - reference WIS DOT Standard Specification for HIGHWAY and STRUCTURE CONSTRUCTION latest edition.
2. Color:
   Background - Yellow
   Message - Black
3. Corners may be square or rounded when base material is plywood but borders shall be rounded as shown. When base material is metal, the corners and borders shall be rounded.

SIZE	A	B	C	D	E	F	G	H	I	J	K	L	M	N	O	P	Q	R	S	T	U	V	W	X	Y	Z	Area sq. ft.
1	36	18	1 1/8	3/8	1/2	5	2 1/2	5 3/4	3/4	15 5/8	10 1/8																4.5
2S	48	24	1 3/8	1/2	5/8	6 1/2	3 1/4	7 1/2	1	20 1/2	13 1/4																8.0
2M	48	24	1 3/8	1/2	5/8	6 1/2	3 1/4	7 1/2	1	20 1/2	13 1/4																8.0
3	60	30	1 3/8	1/2	5/8	8	4	9 1/4	1 1/4	25 3/8	16 1/4																12.5
4	60	30	1 3/8	1/2	5/8	8	4	9 1/4	1 1/4	25 3/8	16 1/4																12.5
5	96	48	2 1/4	3/4	1	13	6 1/2	15	2	41	26 1/2																32.0

STANDARD SIGN
W1-7

WISCONSIN DEPT OF TRANSPORTATION

APPROVED Matthew R Rauch
for State Traffic Engineer

DATE 6/7/10 PLATE NO. W1-7.7

PROJECT NO: | HWY: | COUNTY: | SHEET NO: 148 | E

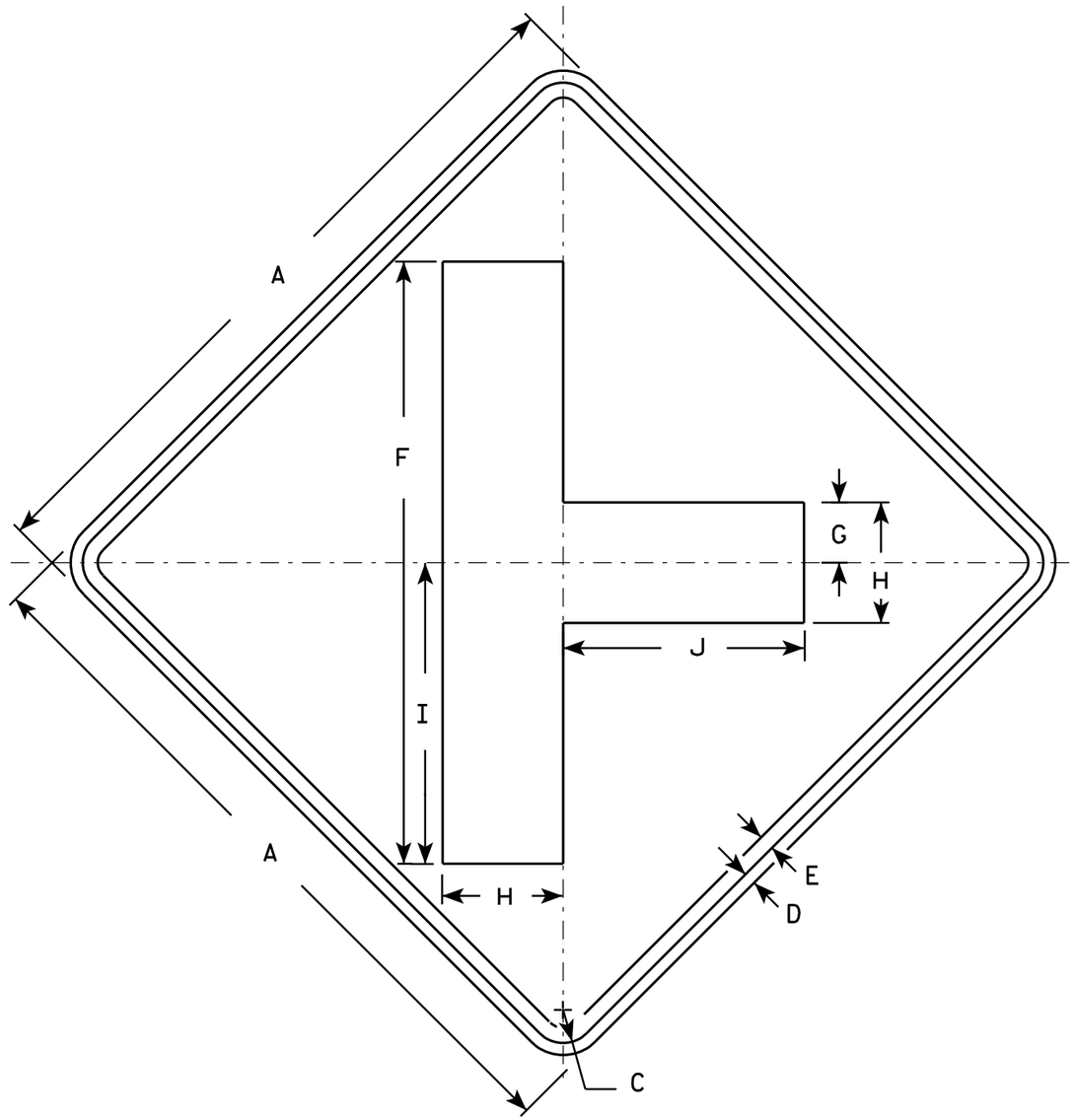

W2-2

NOTES

1. Sign is Type II - Type F Reflective - reference WIS DOT Standard Specification for HIGHWAY and STRUCTURE CONSTRUCTION latest edition.
2. Color:
   Background - Yellow
   Message - Black
3. Corners may be square or rounded when base material is plywood but borders shall be rounded as shown. When base material is metal, the corners and borders shall be rounded.

SIZE	A	B	C	D	E	F	G	H	I	J	K	L	M	N	O	P	Q	R	S	T	U	V	W	X	Y	Z	Area sq. ft.
1	24		1 1/8	3/8	1/2	20	2	4	10	8																	4.0
2S	30		1 3/8	1/2	5/8	25	2 1/2	5	12 1/2	10																	6.25
2M	30		1 3/8	1/2	5/8	25	2 1/2	5	12 1/2	10																	6.25
3	36		1 5/8	5/8	3/4	30	3	6	15	12																	9.0
4	48		2 1/4	3/4	1	40	4	8	20	16																	16.0
5																											

STANDARD SIGN
W2-2

WISCONSIN DEPT OF TRANSPORTATION

APPROVED Matthew R Rauch
For State Traffic Engineer

DATE 5/29/12 PLATE NO. W2-2.6

PROJECT NO: | HWY: | COUNTY: | SHEET NO: 149 | E

FILE NAME : C:\CAEFiles\Projects\tr_stdplate\W22.DGN PLOT DATE : 29-MAY-2012 10:18 PLOT BY : mscsja PLOT NAME : PLOT SCALE : 6.202372:1.000000
WISDOT/CADDS SHEET 42

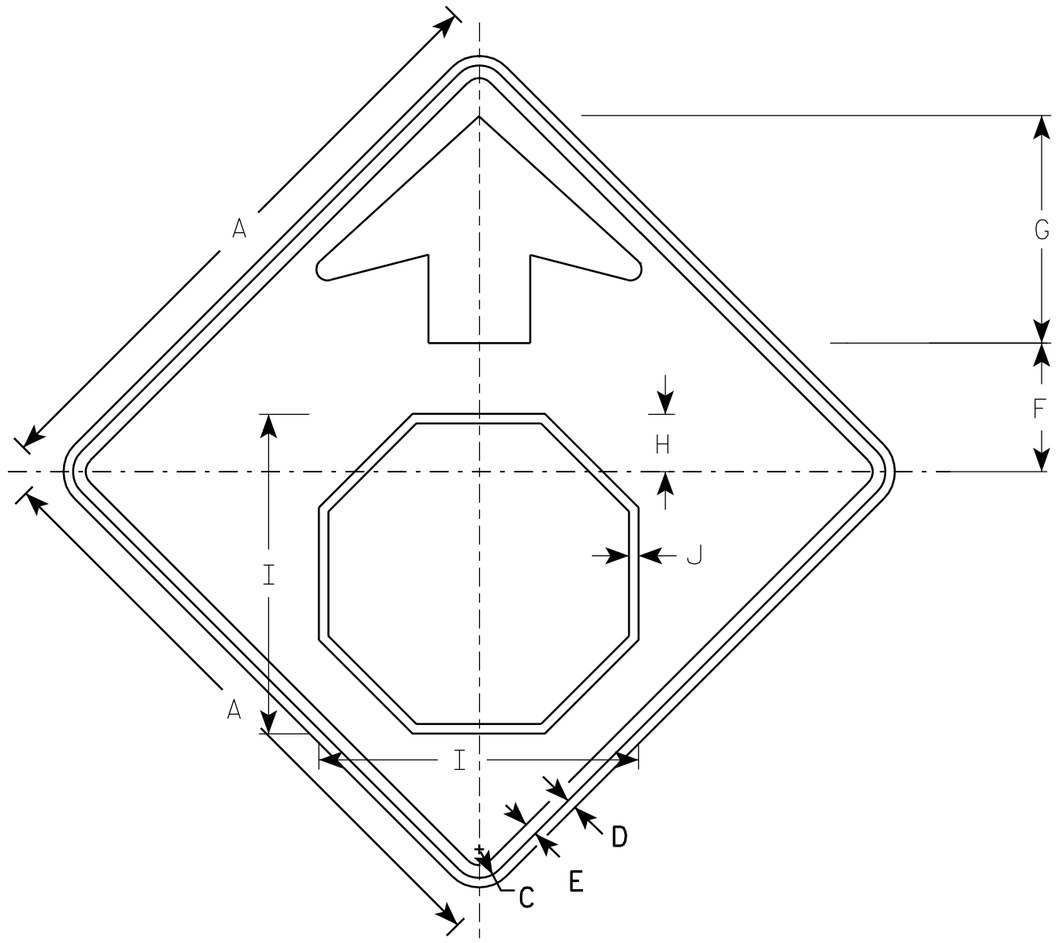

W3-1

NOTES

1. All Signs Type II - Type F Reflective - reference WIS DOT Standard Specification for HIGHWAY and STRUCTURE CONSTRUCTION latest edition.
2. Color:
   Background - YELLOW
   Arrow & Border - BLACK
   Stop Symbol - WHITE BORDER ON RED BACKGROUND

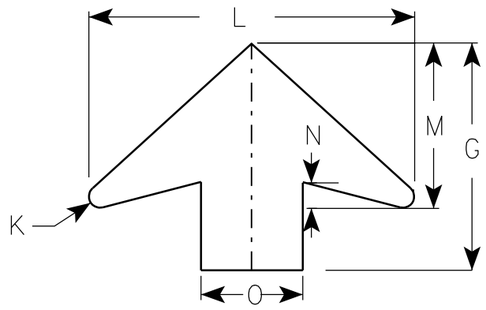

ARROW DETAIL

SIZE	A	B	C	D	E	F	G	H	I	J	K	L	M	N	O	P	Q	R	S	T	U	V	W	X	Y	Z	Area sq. ft.
1	30		1 3/8	1/2	5/8	6 1/4	11 1/4	2 7/8	15 3/4	1/2	1/2	16	8	1 1/4	5												6.25
2S	36		1 5/8	5/8	3/4	7 1/2	13 1/2	3 1/2	19	5/8	5/8	19 1/4	9 3/4	1 5/8	6												9.0
2M	36		1 5/8	5/8	3/4	7 1/2	13 1/2	3 1/2	19	5/8	5/8	19 1/4	9 3/4	1 5/8	6												9.0
3	36		1 5/8	5/8	3/4	7 1/2	13 1/2	3 1/2	19	5/8	5/8	19 1/4	9 3/4	1 5/8	6												9.0
4	48		2 1/4	3/4	1	10	17 7/8	4 1/2	25 1/8	3/4	7/8	25 5/8	13	2	8												16.0
5	48		2 1/4	3/4	1	10	17 7/8	4 1/2	25 1/8	3/4	7/8	25 5/8	13	2	8												16.0

STANDARD SIGN
W3-1

WISCONSIN DEPT OF TRANSPORTATION

APPROVED Matthew R Rauch
for State Traffic Engineer

DATE 6/7/10 PLATE NO. W3-1.12

PROJECT NO:

SHEET NO: 150 E

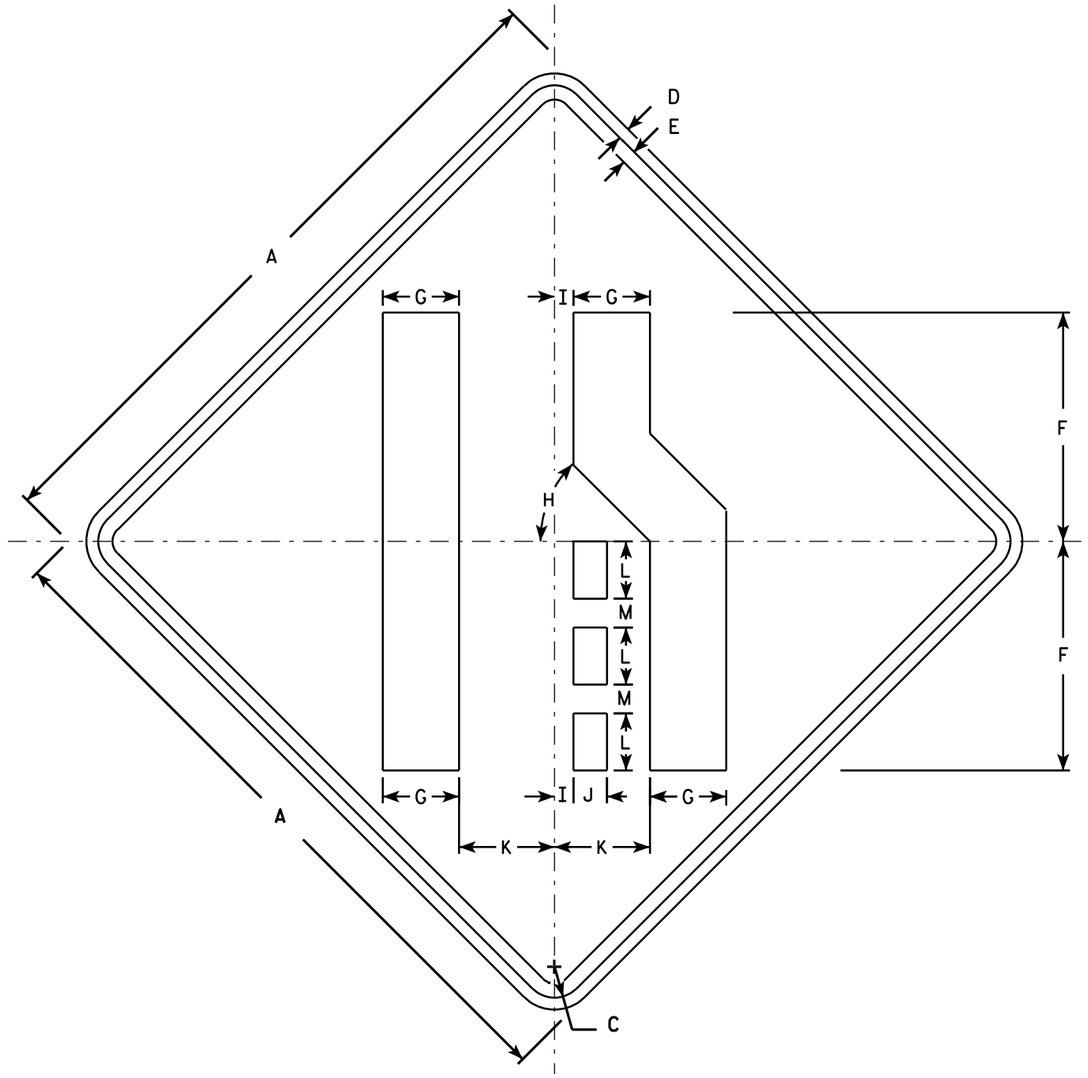

W4-2R

NOTES

1. Sign is Type II - Type F Reflective - reference WIS DOT Standard Specification for HIGHWAY and STRUCTURE CONSTRUCTION latest edition.
2. Color:
   Background - Yellow
   Message - Black
3. Corners may be square or rounded when base material is plywood but borders shall be rounded as shown. When base material is metal, the corners and borders shall be rounded.
4. W4-2L is the same as W4-2R except the symbol is reversed along the vertical centerline.

SIZE	A	B	C	D	E	F	G	H	I	J	K	L	M	N	O	P	Q	R	S	T	U	V	W	X	Y	Z	Area sq. ft.
1	30		1 3/8	1/2	5/8	10	3 3/8	45°	7/8	1 1/2	4 1/4	2 1/2	1 1/4														6.25
2S	36		1 5/8	5/8	3/4	12	4	45°	1	1 3/4	5	3	1 1/2														9.0
2M	36		1 5/8	5/8	3/4	12	4	45°	1	1 3/4	5	3	1 1/2														9.0
3	36		1 5/8	5/8	3/4	12	4	45°	1	1 3/4	5	3	1 1/2														9.0
4	48		2 1/4	3/4	1	16	5 3/8	45°	1 1/4	2 3/8	6 3/4	4	2														16.0
5	48		2 1/4	3/4	1	16	5 3/8	45°	1 1/4	2 3/8	6 3/4	4	2														16.0

STANDARD SIGN
W4-2

WISCONSIN DEPT OF TRANSPORTATION

APPROVED Matthew R Rauch
for State Traffic Engineer

DATE 3/12/13 PLATE NO. W4-2.14

PROJECT NO:

SHEET NO: 151 E

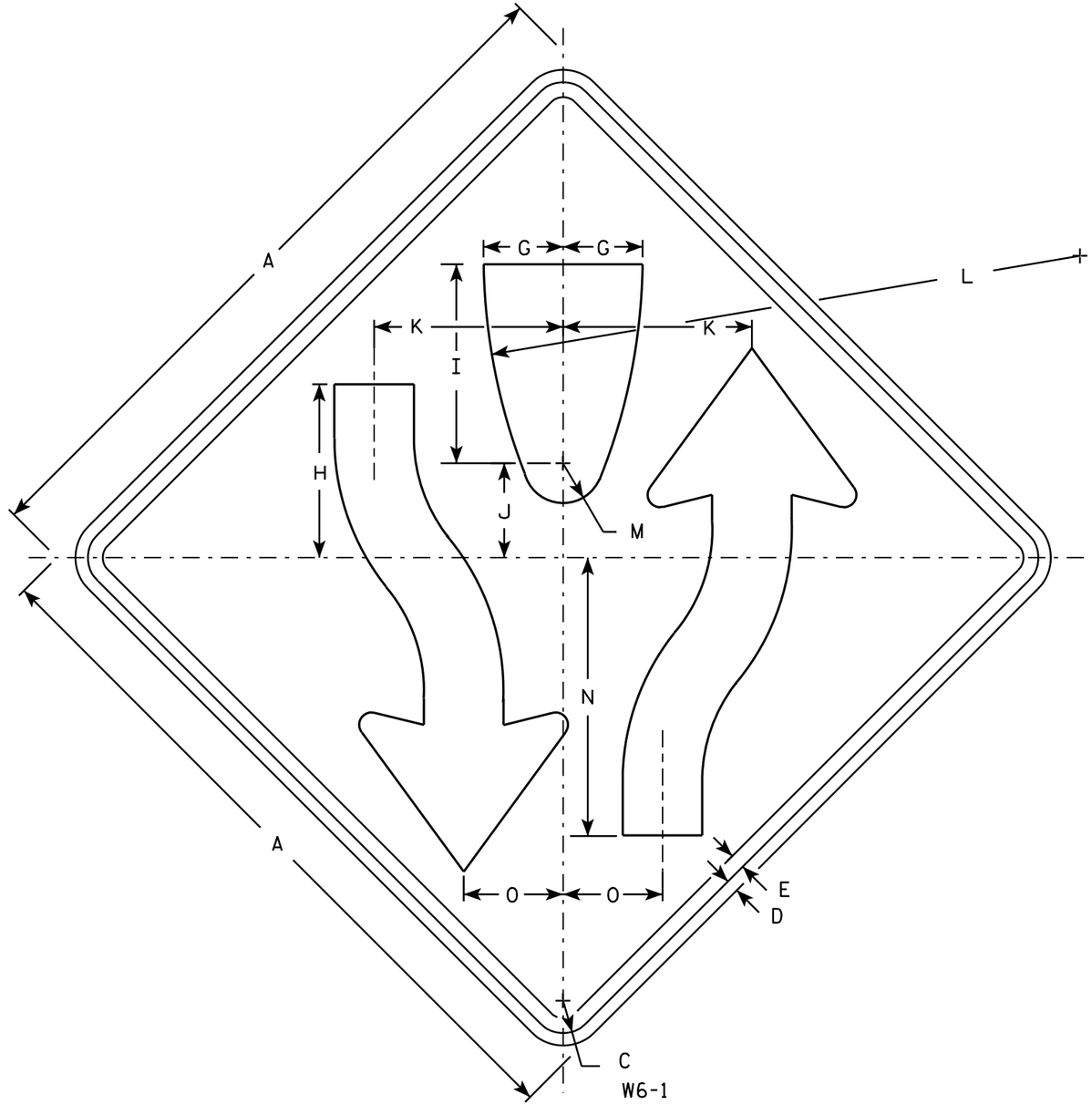

NOTES

1. Sign is Type II - Type F Reflective - reference WIS DOT Standard Specification for HIGHWAY and STRUCTURE CONSTRUCTION latest edition.
2. Color:
   Background - Yellow
   Message - Black
3. Corners may be square or rounded when base material is plywood but borders shall be rounded as shown. When base material is metal, the corners and borders shall be rounded.
4. W6-2 same as W6-1 but is rotated 180° when mounted.

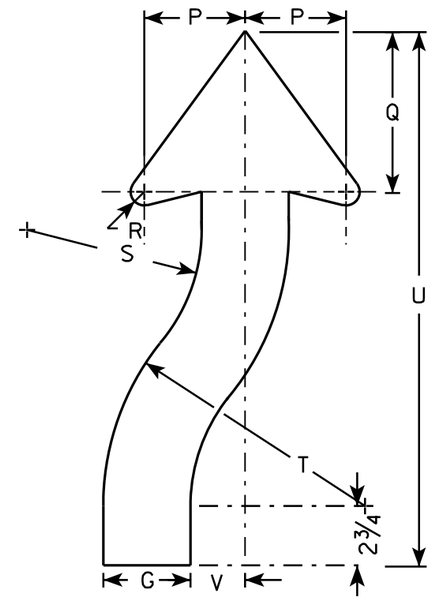

ARROW DETAIL

SIZE	A	B	C	D	E	F	G	H	I	J	K	L	M	N	O	P	Q	R	S	T	U	V	W	X	Y	Z	Area sq. ft.
1	30		1 3/8	1/2	5/8		3 1/4	8	8 1/4	4 1/8	7 7/8	25	1 3/4	11 5/8	4 1/8	3 7/8	6 3/4	5/8	6 5/8	9 7/8	21 5/8	2					6.25
2S	36		1 5/8	5/8	3/4		4	8 3/4	10	4 3/4	9 1/2	30	2	14	5	4 5/8	7 3/8	7/8	8	12	24 1/2	2 1/2					9.0
2M	36		1 5/8	5/8	3/4		4	8 3/4	10	4 3/4	9 1/2	30	2	14	5	4 5/8	7 3/8	7/8	8	12	24 1/2	2 1/2					9.0
3																											
4	48		2 1/4	3/4	1		5 3/8	11 5/8	13 3/8	6 3/8	12 5/8	40	2 5/8	18 5/8	6 5/8	6 1/4	9 7/8	1 1/4	10 5/8	16	32 5/8	3 3/8					16.0
5	48		2 1/4	3/4	1		5 3/8	11 5/8	13 3/8	6 3/8	12 5/8	40	2 5/8	18 5/8	6 5/8	6 1/4	9 7/8	1 1/4	10 5/8	16	32 5/8	3 3/8					16.0

STANDARD SIGN
W6-1 & W6-2

WISCONSIN DEPT OF TRANSPORTATION

APPROVED Matthew R Rauch
for State Traffic Engineer

DATE 03/12/13 PLATE NO. W6-1.14

PROJECT NO:	HWY:	COUNTY:		SHEET NO: 152	E

7

FILE NAME : C:\CAEFiles\Projects\tr_stdplate\W61.DGN PLOT DATE : 12-MAR-2013 14:02 PLOT BY : mscsja PLOT NAME : PLOT SCALE : 6.946657:1.000000
WISDOT/CADDS SHEET 42

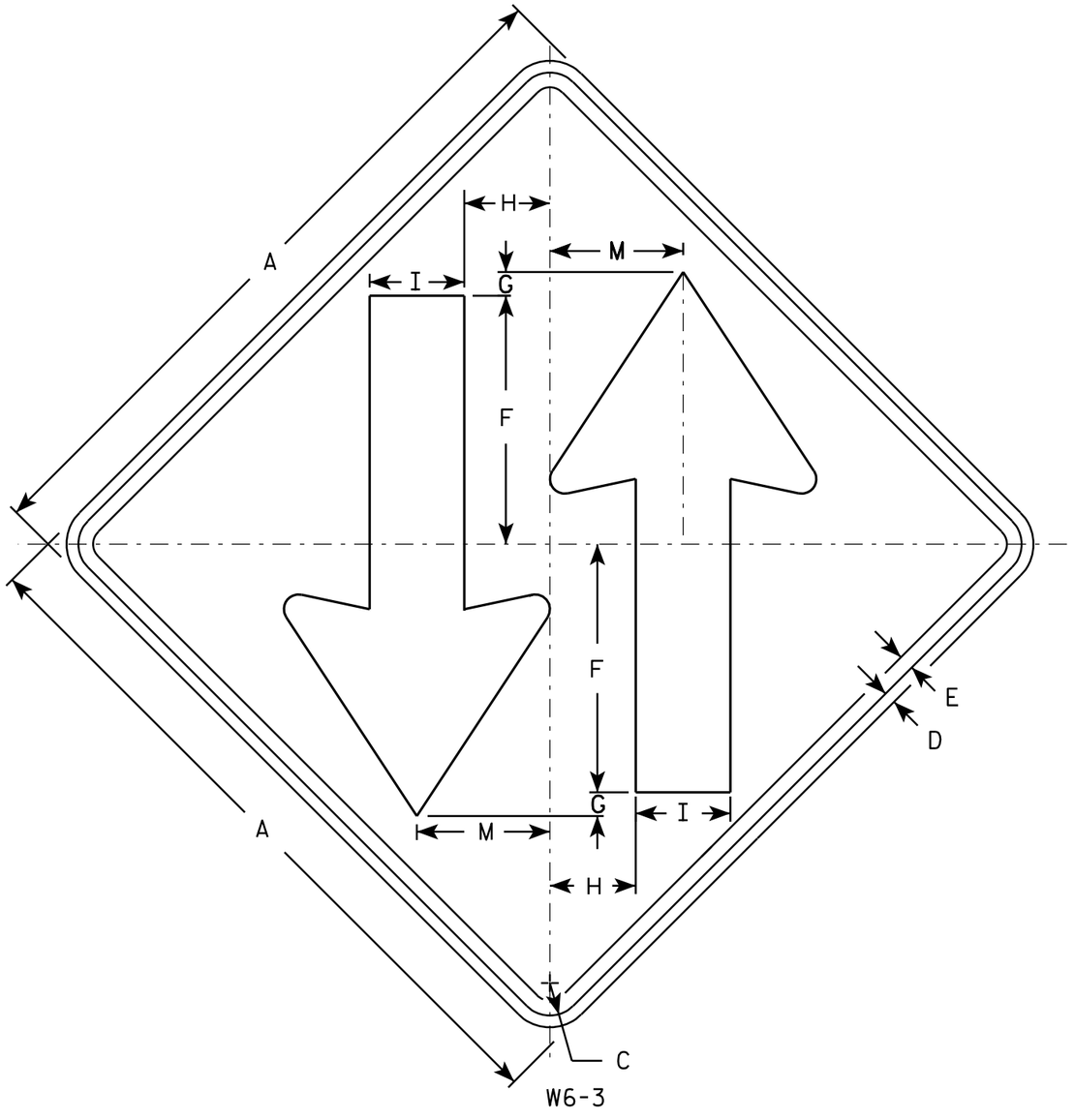

NOTES

1. Sign is Type II - Type F Reflective - reference WIS DOT Standard Specification for HIGHWAY and STRUCTURE CONSTRUCTION latest edition.
2. Color:
   Background - Yellow
   Message - Black
3. Corners may be square or rounded when base material is plywood but borders shall be rounded as shown. When base material is metal, the corners and borders shall be rounded.

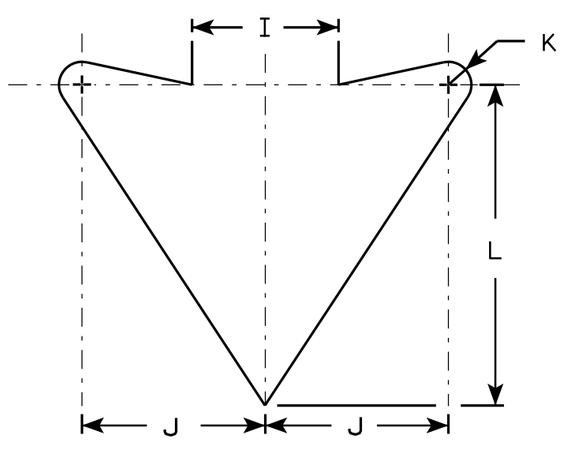

ARROW DETAIL

SIZE	A	B	C	D	E	F	G	H	I	J	K	L	M	N	O	P	Q	R	S	T	U	V	W	X	Y	Z	Area sq. ft.
1	30		1 3/8	1/2	5/8	10 1/2	1	3 5/8	4	5	5/8	8 3/4	5 5/8														6.25
2S	36		1 5/8	5/8	3/4	12	1	4 1/4	5	6	3/4	10 1/2	6 3/4														9.0
2M	36		1 5/8	5/8	3/4	12	1	4 1/4	5	6	3/4	10 1/2	6 3/4														9.0
3																											
4	48		2 1/4	3/4	1	15 1/2	1	6	6	8	1	14	9														16.0
5	48		2 1/4	3/4	1	15 1/2	1	6	6	8	1	14	9														16.0

STANDARD SIGN
W6-3

WISCONSIN DEPT OF TRANSPORTATION

APPROVED Matthew R Rauch
for State Traffic Engineer

DATE 03/12/13 PLATE NO. W6-3.10

PROJECT NO:	HWY:	COUNTY:		SHEET NO: 153	E

STATION	DISTANCE	AREA (SF)				INCREMENTAL VOL (CY) (UNADJUSTED)				CUMULATIVE VOL (CY)				MASS ORDINATE NOTE 7
		CUT	UNUSABLE PAVEMENT MATERIAL	FILL	EBS	CUT NOTE 1	UNUSABLE PAVEMENT MATERIAL NOTE 2	FILL NOTE 3	EBS	CUT 1.00 NOTE 1	EXPANDED FILL 1.30 NOTE 6	EXPANDED EBS BACKFILL 1.30 NOTE 4	REDUCED EBS IN FILL 0.80 NOTE 5	
42+64'FE		4	6	---	0	---	---	---	---	0	0	0	0	0
43+00'FE	36	2	6	0	0	4	9	0	0	4	0	0	0	-5
43+50'FE	50	2	6	---	0	3	12	0	0	6	0	0	0	-14
44+00'FE	50	1	6	---	0	2	12	---	0	9	0	0	0	-24
44+50'FE	50	0	6	0	0	1	12	0	0	10	1	0	0	-35
45+00'FE	50	7	6	40	0	7	12	37	0	17	49	0	0	-88
45+50'FE	50	42	6	---	1	45	12	37	1	62	96	2	1	-101
46+00'FE	50	15	6	8	0	53	12	8	1	115	107	3	2	-69
46+50'FE	50	18	6	79	0	31	12	81	1	146	212	4	2	-155
47+00'FE	50	3	6	80	0	20	12	147	0	166	403	4	3	-338
47+50'FE	50	8	6	24	0	10	12	96	0	176	528	5	3	-465
48+00'FE	50	7	6	2	0	14	12	24	0	190	560	5	3	-494
48+50'FE	50	5	6	13	0	11	12	14	0	201	579	5	3	-513
49+00'FE	50	15	6	13	0	19	12	24	0	220	610	6	4	-537
49+50'FE	50	18	6	15	0	30	12	26	1	250	644	6	4	-552
50+00'FE	50	29	6	1	1	43	12	15	1	293	664	8	5	-540
50+50'FE	50	18	6	12	0	43	12	12	1	337	680	9	5	-524
51+00'FE	50	22	6	11	0	37	12	21	1	374	708	10	6	-525
51+50'FE	50	15	6	0	0	34	12	10	1	408	721	11	7	-516
52+00'FE	50	14	6	17	0	26	12	16	1	434	742	11	7	-521
52+50'FE	50	10	6	23	0	22	12	37	0	456	790	12	7	-560
53+00'FE	50	10	6	1	0	18	12	23	0	474	820	12	8	-583
53+50'FE	50	13	6	2	0	21	12	3	0	495	823	13	8	-577
54+00'FE	50	14	6	2	0	25	12	4	0	520	828	14	8	-568
54+50'FE	---	---	---	---	---	---	---	---	---	520	828	14	8	-568
55+00'FE	---	---	---	---	---	---	---	---	---	520	828	14	8	-568
55+50'FE	---	---	---	---	---	---	---	---	---	520	828	14	8	-568
56+00'FE	200	7	6	4	0	77	48	22	2	597	857	16	10	-566
56+50'FE	50	9	6	13	0	14	12	16	0	611	878	16	10	-584
57+00'FE	50	6	6	7	0	13	12	19	0	625	902	16	10	-607
57+50'FE	50	24	6	8	0	27	12	14	1	652	920	17	10	-609
58+00'FE	50	19	6	6	0	39	12	12	1	691	935	18	11	-596
58+50'FE	50	18	6	0	0	34	12	5	1	725	942	19	12	-581
59+00'FE	50	23	6	---	0	37	12	0	1	762	943	20	12	-555
59+50'FE	50	12	6	---	0	32	12	---	1	795	943	21	13	-533
60+00'FE	50	13	6	3	0	24	12	3	0	818	946	21	13	-525
60+50'FE	50	11	6	12	0	23	12	14	0	841	964	22	13	-531
61+00'FE	---	---	---	---	---	---	---	---	---	841	964	22	13	-531
61+50'FE	100	7	6	13	0	33	24	45	1	874	1,023	23	14	-580
62+00'FE	50	5	6	55	0	11	12	63	0	885	1,104	23	14	-662
62+50'FE	50	3	6	84	0	8	12	129	0	893	1,272	23	14	-834
63+00'FE	50	5	6	24	0	8	12	100	0	900	1,401	23	14	-967
63+50'FE	50	7	6	17	0	12	12	38	0	912	1,451	24	15	-1,017
64+00'FE	50	9	6	9	0	15	12	24	0	926	1,482	24	15	-1,045
64+50'FE	50	16	6	11	0	23	12	18	0	950	1,505	25	15	-1,057
65+00'FE	50	35	6	8	1	47	12	17	1	997	1,527	26	16	-1,043
65+50'FE	50	14	6	9	0	45	12	15	1	1,042	1,547	27	17	-1,029
66+00'FE	50	35	6	1	1	45	12	9	1	1,087	1,560	28	17	-1,007
66+50'FE	50	21	6	5	0	52	12	6	1	1,138	1,567	30	18	-974
67+00'FE	---	---	---	---	---	---	---	---	---	1,138	1,567	30	18	-974
67+50'FE	---	---	---	---	---	---	---	---	---	1,138	1,567	30	18	-974
68+00'FE	150	27	6	0	1	132	36	16	3	1,270	1,588	33	20	-896
68+50'FE	50	21	6	1	0	44	12	1	1	1,315	1,589	34	21	-863
69+00'FE	---	---	---	---	---	---	---	---	---	1,315	1,589	34	21	-863
69+50'FE	100	22	6	0	0	80	24	2	2	1,394	1,591	36	22	-808
70+00'FE	50	31	6	---	1	49	12	0	1	1,443	1,591	38	23	-770
70+50'FE	50	31	6	0	1	58	12	0	1	1,500	1,591	39	24	-724
71+00'FE	50	21	6	0	0	48	12	0	1	1,548	1,592	40	25	-687
71+50'FE	50	15	6	1	0	33	12	1	1	1,582	1,594	41	25	-667
72+00'FE	50	17	6	4	0	30	12	5	1	1,612	1,600	42	26	-654
72+50'FE	50	11	6	6	0	26	12	9	1	1,637	1,612	43	26	-652
73+00'FE	---	---	---	---	---	---	---	---	---	1,637	1,612	43	26	-652
73+50'FE	100	28	6	0	1	73	24	12	1	1,710	1,627	44	27	-616
74+00'FE	50	14	6	3	0	40	12	2	1	1,750	1,630	45	28	-591
74+50'FE	50	13	6	4	0	25	12	6	0	1,775	1,637	46	28	-585
75+00'FE	---	---	---	---	---	---	---	---	---	1,775	1,637	46	28	-585
75+50'FE	100	7	6	20	0	36	24	44	1	1,811	1,694	47	29	-628
76+00'FE	50	8	6	27	0	14	12	44	0	1,826	1,750	47	29	-682
76+50'FE	50	7	6	44	0	14	12	65	0	1,840	1,836	48	29	-764
77+00'FE	50	15	6	12	0	21	12	51	0	1,861	1,902	48	30	-821
77+50'FE	50	12	6	17	0	25	12	27	1	1,886	1,937	49	30	-842
78+00'FE	50	18	6	13	0	28	12	28	1	1,914	1,973	50	31	-861
78+50'FE	50	20	6	12	0	35	12	23	1	1,949	2,003	51	31	-868
79+00'FE	50	18	6	13	0	35	12	24	1	1,984	2,034	52	32	-875
79+50'FE	50	20	6	11	0	35	12	22	1	2,019	2,063	52	32	-880
80+00'FE	50	32	6	0	1	48	12	10	1	2,068	2,076	54	33	-856
80+50'FE	50	40	6	11	1	66	12	10	1	2,134	2,090	55	34	-813
81+00'FE	50	42	6	19	1	76	12	28	2	2,210	2,126	57	35	-785

NOTES:
1) CUT: CUT INCLUDES UNUSABLE PAVEMENT MATERIAL
2) UNUSABLE PAVEMENT MATERIAL: THIS DOES NOT SHOW UP IN THE CROSS SECTIONS
3) FILL: FILL DOES NOT INCLUDE UNUSABLE PAVEMENT MATERIAL
4) EXPANDED EBS BACKFILL: THIS IS TO BE FILLED WITH CUT MATERIAL. EBS BACKFILL EXPANSION FACTOR = 1.30
5) EXCAVATED EBS MATERIAL IS UNUSABLE IN FILLS
6) EXPANDED FILL = UNEXPANDED FILL * EXPANDED FILL FACTOR. EXPANDED FILL FACTOR = 1.30
7) MASS ORDINATE: MASS ORDINATE = CUT - UNUSABLE PAVEMENT MATERIAL - (FILL - REDUCED EBS IN FILL) * FILL FACTOR

STATION	DISTANCE	AREA (SF)				INCREMENTAL VOL (CY) (UNADJUSTED)				CUMULATIVE VOL (CY)				MASS ORDINATE NOTE 7
		CUT	UNUSABLE PAVEMENT MATERIAL	FILL	EBS	CUT NOTE 1	UNUSABLE PAVEMENT MATERIAL NOTE 2	FILL NOTE 3	EBS	CUT 1.00 NOTE 1	EXPANDED FILL 1.30 NOTE 6	EXPANDED EBS BACKFILL 1.30 NOTE 4	REDUCED EBS IN FILL 0.80 NOTE 5	
46+00'ISH'		9	7	102	0	---	---	---	---	0	0	0	0	0
46+50'ISH'	50	6	7	73	0	13	13	162	0	13	211	0	0	-210
47+00'ISH'	50	6	7	109	0	11	13	169	0	24	430	1	0	-432
47+50'ISH'	50	10	7	60	0	15	13	157	0	39	634	1	1	-633
48+00'ISH'	50	9	7	20	0	18	13	74	0	57	730	1	1	-724
48+50'ISH'	50	27	7	6	1	33	13	24	1	90	761	2	1	-734
49+00'ISH'	50	53	7	---	1	74	13	6	1	164	769	4	3	-679
49+50'ISH'	50	45	7	---	1	91	13	---	2	254	769	7	4	-599
50+00'ISH'	50	11	7	13	0	52	13	12	1	306	784	8	5	-574
50+50'ISH'	50	12	7	12	0	21	13	23	0	327	815	9	5	-596
51+00'ISH'	50	80	7	7	2	86	13	18	2	413	839	11	7	-545
51+50'ISH'	50	11	7	10	0	85	13	17	2	498	860	13	8	-493
52+00'ISH'	50	10	7	9	0	19	13	18	0	517	884	13	8	-510
52+50'ISH'	50	6	7	4	0	15	13	13	0	532	900	14	9	-524
53+00'ISH'	50	6	7	18	0	11	13	21	0	543	928	14	9	-552
53+50'ISH'	50	4	7	39	0	9	13	53	0	553	996	14	9	-625
54+00'ISH'	50	3	7	104	0	7	13	133	0	559	1,169	15	9	-803
54+50'ISH'	50	13	7	95	0	15	13	184	0	574	1,408	15	9	-1,040
55+00'ISH'	50	6	7	68	0	18	13	150	0	592	1,604	15	9	-1,231
55+50'ISH'	50	7	7	41	0	12	13	101	0	604	1,735	16	10	-1,362
56+00'ISH'	50	7	7	22	0	13	13	59	0	617	1,812	16	10	-1,438
56+50'ISH'	50	11	7	9	0	17	13	29	0	634	1,850	16	10	-1,471
57+00'ISH'	50	10	7	33	0	19	13	39	0	653	1,901	17	10	-1,515
57+50'ISH'	50	117	7	10	2	118	13	40	2	771	1,953	20	12	-1,460
58+00'ISH'	50	16	7	14	0	123	13	22	2	895	1,982	23	14	-1,376
58+50'ISH'	50	17	7	11	0	31	13	23	1	926	2,012	24	15	-1,387
59+00'ISH'	---	---	---	---	---	---	---	---	---	926	2,012	24	15	-1,387
59+50'ISH'	100	47	7	---	1	119	26	20	2	1,045	2,038	27	17	-1,317
60+00'ISH'	---	---	---	---	---	---	---	---	---	1,045	2,038	27	17	-1,317
60+50'ISH'	100	4	7	13	0	94	26	24	2	1,139	2,069	30	18	-1,278
61+00'ISH'	50	4	7	24	0	7	13	35	0	1,146	2,114	30	18	-1,329
61+50'ISH'	50	3	7	23	0	6	13	44	0	1,152	2,171	30	18	-1,392
62+00'ISH'	50	4	7	13	0	6	13	33	0	1,158	2,215	30	19	-1,442
62+50'ISH'	50	19	7	12	0	21	13	23	0	1,180	2,245	31	19	-1,463
63+00'ISH'	---	---	---	---	---	---	---	---	---	1,180	2,245	31	19	-1,463
63+50'ISH'	100	5	7	12	0	45	26	44	1	1,225	2,303	32	20	-1,501
64+00'ISH'	50	6	7	8	0	10	13	18	0	1,235	2,326	32	20	-1,526
64+50'ISH'	50	23	7	2	0	27	13	9	1	1,262	2,338	33	20	-1,523
65+00'ISH'	50	34	7	1	1	53	13	2	1	1,316	2,341	34	21	-1,485
65+50'ISH'	50	12	7	8	0	43	13	8	1	1,358	2,352	35	22	-1,465
66+00'ISH'	50	9	7	5	0	19	13	12	0	1,378	2,368	36	22	-1,474
66+50'ISH'	50	9	7	33	0	16	13	35	0	1,394	2,413	36	22	-1,515
67+00'ISH'	50	11	7	6	0	18	13	37	0	1,412	2,461	37	23	-1,557
67+50'ISH'	50	10	7	5	0	20	13	10	0	1,432	2,474	37	23	-1,563
68+00'ISH'	50	9	7	10	0	18	13	13	0	1,450	2,492	38	23	-1,575
68+50'ISH'	50	4	7	17	0	12	13	25	0	1,462	2,524	38	23	-1,608
69+00'ISH'	50	4	7	29	0	8	13	43	0	1,470	2,580	38	24	-1,668
69+50'ISH'	50	2	7	57	0	6	13	80	0	1,476	2,684	38	24	-1,779
70+00'ISH'	50	3	7	88	0	5	13	135	0	1,480	2,859	38	24	-1,962
70+50'ISH'	50	1	7	54	0	3	13	132	0	1,484	3,030	39	24	-2,143
71+00'ISH'	50	3	7	38	0	4	13	85	0	1,488	3,141	39	24	-2,262
71+50'ISH'	50	6	7	46	0	9	13	78	0	1,497	3,242	39	24	-2,368
72+00'ISH'	50	6	7	12	0	11	13	54	0	1,508	3,312	39	24	-2,438
72+50'ISH'	50	6	7	9	0	12	13	19	0	1,520	3,337	40	24	-2,464
73+00'ISH'	50	6	7	8	0	11	13	16	0	1,531	3,357	40	24	-2,486
73+50'ISH'	50	4	7	9	0	9	13	16	0	1,540	3,378	40	25	-2,510
74+00'ISH'	50	13	7	10	0	16	13	17	0	1,556	3,400	40	25	-2,530
74+50'ISH'	50	9	7	8	0	20	13	17	0	1,576	3,422	41	25	-2,543
75+00'ISH'	50	17	7	3	0	24	13	11	0	1,600	3,435	42	26	-2,545
75+50'ISH'	50	14	7	14	0	29	13	16	1	1,629	3,456	42	26	-2,549
76+00'ISH'	50	4	7	11	0	17	13	23	0	1,646	3,486	43	26	-2,574
76+50'ISH'	50	8	7	7	0	11	13	16	0	1,657	3,507	43	27	-2,597
77+00'ISH'	50	8	7	9	0	15	13	14	0	1,672	3,525	43	27	-2,613
77+50'ISH'	50	5	7	8	0	13	13	16	0	1,684	3,546	44	27	-2,634
78+00'ISH'	50	9	7	4	0	13	13	12	0	1,698	3,561	44	27	-2,648
78+50'ISH'	50	15	7	1	0	22	13	5	0	1,720	3,567	45	28	-2,644
79+00'ISH'	50	18	7	1	0	31	13	2	1	1,750	3,569	46	28	-2,628
79+50'ISH'	50	18	7	2	0	33	13	3	1	1,783	3,573	46	29	-2,611
80+00'ISH'	50	18	7	2	0	33	13	4	1	1,817	3,578	47	29	-2,595
80+50'ISH'	50	12	7	3	0	28	13	5	1	1,845	3,584	48	30	-2,585
81+00'ISH'	50	13	7	3	0	23	13	5	0	1,868	3,590	49	30	-2,580
81+50'ISH'	50	12	7	1	0	23	13	3	0	1,891	3,595	49	30	-2,573
82+00'ISH'	50	15	7	2	0	25	13	3	1	1,916	3,598	50	31	-2,564
82+50'ISH'	50	15	7	2	0	27	13	4	1	1,944	3,604	51	31	-2,555
83+00'ISH'	50	10	7	2	0	23	13	4	0	1,966	3,610	51	31	-2,550

CON'T ON NEXT PAGE

NOTES:
1) CUT: CUT INCLUDES UNUSABLE PAVEMENT MATERIAL
2) UNUSABLE PAVEMENT MATERIAL: THIS DOES NOT SHOW UP IN THE CROSS SECTIONS
3) FILL: FILL DOES NOT INCLUDE UNUSABLE PAVEMENT MATERIAL
4) EXPANDED EBS BACKFILL: THIS IS TO BE FILLED WITH CUT MATERIAL. EBS BACKFILL EXPANSION FACTOR = 1.30
5) EXCAVATED EBS MATERIAL IS UNUSABLE IN FILLS
6) EXPANDED FILL = UNEXPANDED FILL * EXPANDED FILL FACTOR. EXPANDED FILL FACTOR = 1.30
7) MASS ORDINATE: MASS ORDINATE = CUT - UNUSABLE PAVEMENT MATERIAL - (FILL - REDUCED EBS IN FILL) * FILL FACTOR

STATION	DISTANCE	AREA (SF)				INCREMENTAL VOL (CY) (UNADJUSTED)				CUMULATIVE VOL (CY)				MASS ORDINATE NOTE 7
		CUT	UNUSABLE PAVEMENT MATERIAL	FILL	EBS	CUT NOTE 1	UNUSABLE PAVEMENT MATERIAL NOTE 2	FILL NOTE 3	EBS	CUT 1.00 NOTE 1	EXPANDED FILL 1.30 NOTE 6	EXPANDED EBS BACKFILL 1.30 NOTE 4	REDUCED EBS IN FILL 0.80 NOTE 5	
83+50'ISH'	50	20	7	0	0	28	13	2	1	1,994	3,613	52	32	-2,538
84+00'ISH'	50	10	7	23	0	27	13	21	1	2,022	3,640	53	32	-2,550
84+50'ISH'	50	9	7	1	0	17	13	22	0	2,039	3,669	53	33	-2,574
85+00'ISH'	50	41	7	3	1	46	13	3	1	2,085	3,673	54	33	-2,544
85+50'ISH'	50	24	7	2	0	60	13	5	1	2,145	3,679	56	34	-2,501
86+00'ISH'	50	11	7	4	0	32	13	6	1	2,177	3,686	57	35	-2,489
86+50'ISH'	50	10	7	2	0	19	13	5	0	2,196	3,693	57	35	-2,489
87+00'ISH'	50	13	7	0	0	21	13	2	0	2,217	3,696	58	35	-2,483
87+50'ISH'	50	15	7	---	0	26	13	0	1	2,243	3,696	58	36	-2,469
88+00'ISH'	50	17	7	---	0	30	13	---	1	2,272	3,696	59	36	-2,452
88+50'ISH'	50	17	7	---	0	31	13	---	1	2,304	3,696	60	37	-2,433
89+00'ISH'	50	20	7	---	0	34	13	---	1	2,338	3,696	61	37	-2,411
89+50'ISH'	50	15	7	7	0	32	13	6	1	2,370	3,704	62	38	-2,399
90+00'ISH'	50	15	7	6	0	28	13	12	1	2,398	3,720	62	38	-2,400
90+50'ISH'	50	15	7	7	0	28	13	12	1	2,426	3,736	63	39	-2,400
91+00'ISH'	50	14	7	16	0	26	13	22	1	2,452	3,764	64	39	-2,414
91+50'ISH'	50	11	7	19	0	22	13	33	0	2,474	3,807	64	40	-2,447
92+00'ISH'	50	12	7	17	0	21	13	33	0	2,496	3,850	65	40	-2,481
92+50'ISH'	50	15	7	14	0	26	13	29	1	2,521	3,887	66	40	-2,505
93+00'ISH'	50	15	7	14	0	28	13	27	1	2,550	3,922	66	41	-2,523
93+50'ISH'	50	14	7	15	0	28	13	27	1	2,577	3,957	67	41	-2,543
94+00'ISH'	50	15	7	14	0	27	13	27	1	2,604	3,992	68	42	-2,563
94+50'ISH'	50	15	7	14	0	28	13	27	1	2,632	4,027	68	42	-2,583
95+00'ISH'	50	17	7	12	0	30	13	24	1	2,662	4,059	69	43	-2,597
95+50'ISH'	50	14	7	13	0	28	13	23	1	2,690	4,089	70	43	-2,611
96+00'ISH'	50	10	7	13	0	22	13	24	0	2,712	4,120	71	43	-2,632
96+50'ISH'	50	12	7	13	0	20	13	25	0	2,733	4,152	71	44	-2,656
97+00'ISH'	50	14	7	11	0	23	13	22	0	2,756	4,181	72	44	-2,674
97+50'ISH'	---	---	---	---	---	---	---	---	---	2,756	4,181	72	44	-2,674
98+00'ISH'	100	9	7	14	0	42	26	46	1	2,798	4,241	73	45	-2,717
98+50'ISH'	50	10	7	23	0	17	13	35	0	2,816	4,286	73	45	-2,757
99+00'ISH'	50	9	7	13	0	17	13	34	0	2,833	4,330	74	45	-2,796
99+50'ISH'	50	7	7	---	0	15	13	12	0	2,848	4,346	74	46	-2,809
100+00'ISH'	50	8	7	---	0	13	13	---	0	2,861	4,346	74	46	-2,809
100+50'ISH'	50	5	7	---	0	12	13	---	0	2,873	4,346	75	46	-2,809
101+00'ISH'	50	---	7	---	---	5	13	---	0	2,878	4,346	75	46	-2,817
101+50'ISH'	50	---	7	---	---	---	13	---	---	2,878	4,346	75	46	-2,830
102+00'ISH'	50	---	7	---	---	---	13	---	---	2,878	4,346	75	46	-2,842
102+50'ISH'	50	---	7	---	---	---	13	---	---	2,878	4,346	75	46	-2,855
102+62'ISH'	12	---	7	---	---	---	3	---	---	2,878	4,346	75	46	-2,858

NOTES:
1) CUT: CUT INCLUDES UNUSABLE PAVEMENT MATERIAL
2) UNUSABLE PAVEMENT MATERIAL: THIS DOES NOT SHOW UP IN THE CROSS SECTIONS
3) FILL: FILL DOES NOT INCLUDE UNUSABLE PAVEMENT MATERIAL
4) EXPANDED EBS BACKFILL: THIS IS TO BE FILLED WITH CUT MATERIAL. EBS BACKFILL EXPANSION FACTOR = 1.30
5) EXCAVATED EBS MATERIAL IS UNUSABLE IN FILLS
6) EXPANDED FILL = UNEXPANDED FILL * EXPANDED FILL FACTOR. EXPANDED FILL FACTOR = 1.30
7) MASS ORDINATE: MASS ORDINATE = CUT - UNUSABLE PAVEMENT MATERIAL - (FILL - REDUCED EBS IN FILL) * FILL FACTOR

STATION	DISTANCE	AREA (SF)				INCREMENTAL VOL (CY) (UNADJUSTED)				CUMULATIVE VOL (CY)				MASS ORDINATE NOTE 7
		CUT	UNUSABLE PAVEMENT MATERIAL	FILL	EBS	CUT NOTE 1	UNUSABLE PAVEMENT MATERIAL NOTE 2	FILL NOTE 3	EBS	CUT 1.00 NOTE 1	EXPANDED FILL 1.30 NOTE 6	EXPANDED EBS BACKFILL 1.30 NOTE 4	REDUCED EBS IN FILL 0.80 NOTE 5	
99+50'GA'		12	6	---	0	---	---	---	---	0	0	0	0	0
100+00'GA'	50	14	6	5	0	24	12	4	0	24	6	1	0	8
100+50'GA'	---	---	---	---	---	---	---	---	---	24	6	1	0	8
101+00'GA'	100	17	6	11	0	57	23	29	1	82	43	2	1	6
101+50'GA'	50	20	6	7	0	34	12	16	1	116	64	3	2	7
102+00'GA'	50	17	6	8	0	34	12	14	1	150	83	4	2	12
102+50'GA'	50	18	6	7	0	32	12	14	1	182	101	5	3	15
103+00'GA'	50	21	6	6	0	36	12	13	1	218	118	6	3	24
103+50'GA'	50	22	6	3	0	40	12	8	1	258	128	7	4	42
104+00'GA'	50	13	6	4	0	33	12	6	1	290	136	8	5	56
104+50'GA'	50	13	6	4	0	24	12	7	0	315	146	8	5	60
105+00'GA'	50	18	6	4	0	29	12	7	1	344	155	9	6	68
105+50'GA'	50	19	6	6	0	35	12	9	1	379	166	10	6	81
106+00'GA'	50	20	6	5	0	36	12	10	1	415	179	11	7	94
106+50'GA'	50	25	6	6	0	42	12	11	1	457	193	12	7	111
107+00'GA'	50	23	6	5	0	45	12	10	1	501	206	13	8	132
107+50'GA'	50	14	6	4	0	35	12	8	1	536	216	14	9	146
108+00'GA'	50	17	6	2	0	29	12	5	1	565	223	15	9	157
108+50'GA'	50	21	6	0	0	36	12	2	1	601	226	16	10	179
109+00'GA'	50	21	6	2	0	39	12	2	1	640	228	17	10	205
109+50'GA'	50	11	6	1	0	30	12	3	1	669	232	17	11	220
110+00'GA'	50	30	6	---	1	38	12	1	1	707	233	18	11	246
110+50'GA'	50	16	6	---	0	43	12	---	1	750	233	20	12	278
111+00'GA'	50	14	6	2	0	28	12	2	1	778	236	20	12	292
111+50'GA'	50	19	6	---	0	31	12	2	1	809	238	21	13	310
112+00'GA'	50	15	6	1	0	31	12	1	1	840	239	22	13	329
112+50'GA'	50	24	6	1	0	36	12	2	1	876	241	23	14	352
113+00'GA'	50	14	6	---	0	35	12	1	1	911	242	24	15	375
113+50'GA'	50	17	6	0	0	29	12	0	1	940	242	24	15	393
114+00'GA'	50	20	6	4	0	34	12	4	1	974	248	25	16	411
114+50'GA'	50	22	6	0	0	38	12	4	1	1,013	254	26	16	433
115+00'GA'	50	26	6	---	1	44	12	0	1	1,057	254	27	17	466
115+50'GA'	50	23	6	0	0	45	12	0	1	1,102	254	29	18	500
116+00'GA'	50	18	6	1	0	38	12	1	1	1,140	255	30	18	526
116+50'GA'	50	21	6	2	0	36	12	2	1	1,176	258	31	19	548
117+00'GA'	50	20	6	5	0	38	12	6	1	1,214	267	32	19	567
117+50'GA'	50	27	6	8	1	43	12	13	1	1,257	283	33	20	583
118+00'GA'	50	31	6	12	1	54	12	19	1	1,310	308	34	21	602
118+50'GA'	50	24	6	25	0	52	12	34	1	1,362	352	35	22	598
119+00'GA'	50	16	6	31	0	37	12	52	1	1,399	419	36	22	558
119+50'GA'	50	15	6	32	0	28	12	58	1	1,427	494	37	23	500
120+00'GA'	50	5	6	37	0	19	12	64	0	1,446	577	38	23	425
120+50'GA'	50	16	6	27	0	20	12	60	0	1,465	654	38	23	356
121+00'GA'	50	19	6	20	0	32	12	44	1	1,497	712	39	24	319
121+50'GA'	50	10	6	23	0	26	12	40	1	1,524	763	40	24	283
122+00'GA'	50	8	6	15	0	16	12	34	0	1,540	808	40	25	243
122+50'GA'	50	7	6	8	0	14	12	21	0	1,554	835	40	25	219
123+00'GA'	50	13	6	1	0	19	12	8	0	1,573	846	41	25	216
123+50'GA'	50	11	6	5	0	23	12	6	0	1,596	853	42	26	220
124+00'GA'	50	36	6	7	1	44	12	11	1	1,640	868	43	26	239
124+50'GA'	50	8	6	8	0	41	12	14	1	1,681	886	44	27	252
125+00'GA'	50	14	6	5	0	21	12	12	0	1,702	901	44	27	246
125+50'GA'	50	13	6	7	0	25	12	12	1	1,727	916	45	28	245
126+00'GA'	50	17	6	3	0	28	12	10	1	1,755	929	46	28	249
126+50'GA'	---	---	---	---	---	---	---	---	---	1,755	929	46	28	249
127+00'GA'	100	39	6	---	1	103	23	6	2	1,858	937	48	30	324
127+50'GA'	50	32	6	---	1	66	12	---	1	1,924	937	50	31	379
128+00'GA'	50	34	6	5	1	61	12	4	1	1,985	942	52	32	424
128+50'GA'	50	75	6	---	1	100	12	4	2	2,085	948	54	33	509
129+00'GA'	50	45	6	2	1	111	12	1	2	2,196	950	57	35	610
129+50'GA'	50	5	6	1	0	47	12	2	1	2,243	952	58	36	643
130+00'GA'	50	8	6	---	0	12	12	1	0	2,256	953	59	36	644
130+50'GA'	50	5	6	1	0	12	12	1	0	2,268	954	59	36	643
130+74'GA'	24	6	6	1	0	5	6	1	0	2,273	955	59	36	642

NOTES:
1) CUT: CUT INCLUDES UNUSABLE PAVEMENT MATERIAL
2) UNUSABLE PAVEMENT MATERIAL: THIS DOES NOT SHOW UP IN THE CROSS SECTIONS
3) FILL: FILL DOES NOT INCLUDE UNUSABLE PAVEMENT MATERIAL
4) EXPANDED EBS BACKFILL: THIS IS TO BE FILLED WITH CUT MATERIAL. EBS BACKFILL EXPANSION FACTOR = 1.30
5) EXCAVATED EBS MATERIAL IS UNUSABLE IN FILLS
6) EXPANDED FILL = UNEXPANDED FILL * EXPANDED FILL FACTOR. EXPANDED FILL FACTOR = 1.30
7) MASS ORDINATE: MASS ORDINATE = CUT - UNUSABLE PAVEMENT MATERIAL - (FILL - REDUCED EBS IN FILL) * FILL FACTOR

STATION	DISTANCE	AREA (SF) CUT	AREA (SF) UNUSABLE PAVEMENT MATERIAL	AREA (SF) FILL	AREA (SF) EBS	INCREMENTAL VOL (CY) (UNADJUSTED) CUT NOTE 1	INCREMENTAL VOL (CY) (UNADJUSTED) UNUSABLE PAVEMENT MATERIAL NOTE 2	INCREMENTAL VOL (CY) (UNADJUSTED) FILL NOTE 3	INCREMENTAL VOL (CY) (UNADJUSTED) EBS	CUMULATIVE VOL (CY) CUT 1.00 NOTE 1	CUMULATIVE VOL (CY) EXPANDED FILL 1.30 NOTE 6	CUMULATIVE VOL (CY) EXPANDED EBS BACKFILL 1.30 NOTE 4	CUMULATIVE VOL (CY) REDUCED EBS IN FILL 0.80 NOTE 5	MASS ORDINATE NOTE 7
132+00'SU'		7	---	5	0	---	---	---	---	0	0	0	0	0
132+50'SU'	50	3	---	18	0	10	---	21	0	10	27	0	0	-17
133+00'SU'	50	6	---	8	0	8	---	24	0	17	58	0	0	-41
133+50'SU'	50	5	---	9	0	10	---	16	0	27	79	1	0	-51
134+00'SU'	50	5	---	8	0	9	---	15	0	36	98	1	1	-61
134+50'SU'	50	4	---	12	0	8	---	19	0	44	122	1	1	-78
135+00'SU'	50	5	---	10	0	9	---	20	0	52	149	1	1	-96
135+50'SU'	50	3	---	8	0	8	---	16	0	60	170	2	1	-109
136+00'SU'	50	6	---	3	0	8	---	11	0	68	184	2	1	-114
136+50'SU'	50	2	---	12	0	8	---	14	0	76	202	2	1	-124
137+00'SU'	50	5	---	1	0	7	---	12	0	83	217	2	1	-133
137+50'SU'	50	13	---	---	0	16	---	1	0	99	219	3	2	-117
138+00'SU'	50	18	---	1	0	28	---	1	1	127	219	3	2	-89
138+50'SU'	50	12	---	1	0	27	---	1	1	155	221	4	2	-63
139+00'SU'	50	8	---	---	0	19	---	1	0	173	222	5	3	-45
139+50'SU'	50	7	---	1	0	14	---	1	0	188	223	5	3	-31
140+00'SU'	50	10	---	---	0	16	---	1	0	203	224	5	3	-16
140+50'SU'	50	2	---	15	0	11	---	14	0	214	241	6	3	-23
141+00'SU'	50	0	---	10	0	2	---	23	0	216	271	6	3	-51
141+50'SU'	50	3	---	7	0	2	---	16	0	218	293	6	3	-70
142+00'SU'	50	6	---	4	0	8	---	10	0	226	306	6	4	-76
142+50'SU'	50	3	---	4	0	8	---	7	0	234	315	6	4	-76
143+00'SU'	50	4	---	2	0	6	---	5	0	240	323	6	4	-77
143+50'SU'	50	11	---	2	0	13	---	4	0	254	327	7	4	-69

STATION	DISTANCE	AREA (SF) CUT	AREA (SF) UNUSABLE PAVEMENT MATERIAL	AREA (SF) FILL	AREA (SF) EBS	INCREMENTAL VOL (CY) (UNADJUSTED) CUT NOTE 1	INCREMENTAL VOL (CY) (UNADJUSTED) UNUSABLE PAVEMENT MATERIAL NOTE 2	INCREMENTAL VOL (CY) (UNADJUSTED) FILL NOTE 3	INCREMENTAL VOL (CY) (UNADJUSTED) EBS	CUMULATIVE VOL (CY) CUT 1.00 NOTE 1	CUMULATIVE VOL (CY) EXPANDED FILL 1.30 NOTE 6	CUMULATIVE VOL (CY) EXPANDED EBS BACKFILL 1.30 NOTE 4	CUMULATIVE VOL (CY) REDUCED EBS IN FILL 0.80 NOTE 5	MASS ORDINATE NOTE 7
144+01'ZAP1		53	10	---	1	---	---	---	---	0	0	0	0	0
144+50'ZAP1	49	59	10	28	1	102	17	25	2	102	33	3	2	53
145+00'ZAP1	50	65	10	12	1	115	18	37	2	217	82	6	3	105
145+50'ZAP1	50	58	10	36	1	115	18	44	2	332	139	9	5	147
146+00'ZAP1	50	66	10	37	1	115	18	67	2	447	226	12	7	160
146+50'ZAP1	50	58	10	138	1	115	18	162	2	561	436	15	9	49
147+00'ZAP1	50	62	10	105	1	111	18	226	2	672	729	17	11	-149
147+50'ZAP1	50	74	10	97	1	126	18	188	3	798	973	21	13	-282
148+00'ZAP1	50	80	10	129	2	142	18	209	3	940	1,245	24	15	-427
148+50'ZAP1	50	84	10	140	2	152	18	249	3	1,092	1,569	28	17	-613
149+00'ZAP1	50	96	10	113	2	166	18	235	3	1,258	1,874	33	20	-766
149+50'ZAP1	50	126	10	66	3	205	18	166	4	1,463	2,090	38	23	-791
150+00'ZAP1	50	119	10	2	2	226	18	63	5	1,689	2,172	44	27	-659
150+50'ZAP1	50	102	10	3	2	204	18	4	4	1,893	2,178	49	30	-474
151+00'ZAP1	50	86	10	5	2	174	18	8	3	2,067	2,188	54	33	-325
151+50'ZAP1	50	81	10	8	2	155	18	12	3	2,222	2,203	58	36	-201
152+00'ZAP1	50	82	10	8	2	151	18	14	3	2,373	2,222	62	38	-83
152+50'ZAP1	50	74	10	15	1	144	18	21	3	2,517	2,249	65	40	19
153+00'ZAP1	50	62	10	10	1	126	18	23	3	2,642	2,280	69	42	99
153+50'ZAP1	50	50	10	12	1	103	18	21	2	2,746	2,307	71	44	160
153+70'ZAP1	20	0	10	1	0	18	7	5	0	2,764	2,314	72	44	165

NOTES:
1) CUT: CUT INCLUDES UNUSABLE PAVEMENT MATERIAL
2) UNUSABLE PAVEMENT MATERIAL: THIS DOES NOT SHOW UP IN THE CROSS SECTIONS
3) FILL: FILL DOES NOT INCLUDE UNUSABLE PAVEMENT MATERIAL
4) EXPANDED EBS BACKFILL: THIS IS TO BE FILLED WITH CUT MATERIAL. EBS BACKFILL EXPANSION FACTOR = 1.30
5) EXCAVATED EBS MATERIAL IS UNUSABLE IN FILLS
6) EXPANDED FILL = UNEXPANDED FILL * EXPANDED FILL FACTOR. EXPANDED FILL FACTOR = 1.30
7) MASS ORDINATE: MASS ORDINATE = CUT - UNUSABLE PAVEMENT MATERIAL - (FILL - REDUCED EBS IN FILL) * FILL FACTOR

9

9

PROJECT NO: 1674-00-70 | HWY: US 12 | COUNTY: SAUK | EARTHWORK: GASSER ROAD AND ZAP DRIVE | SHEET 158 | E

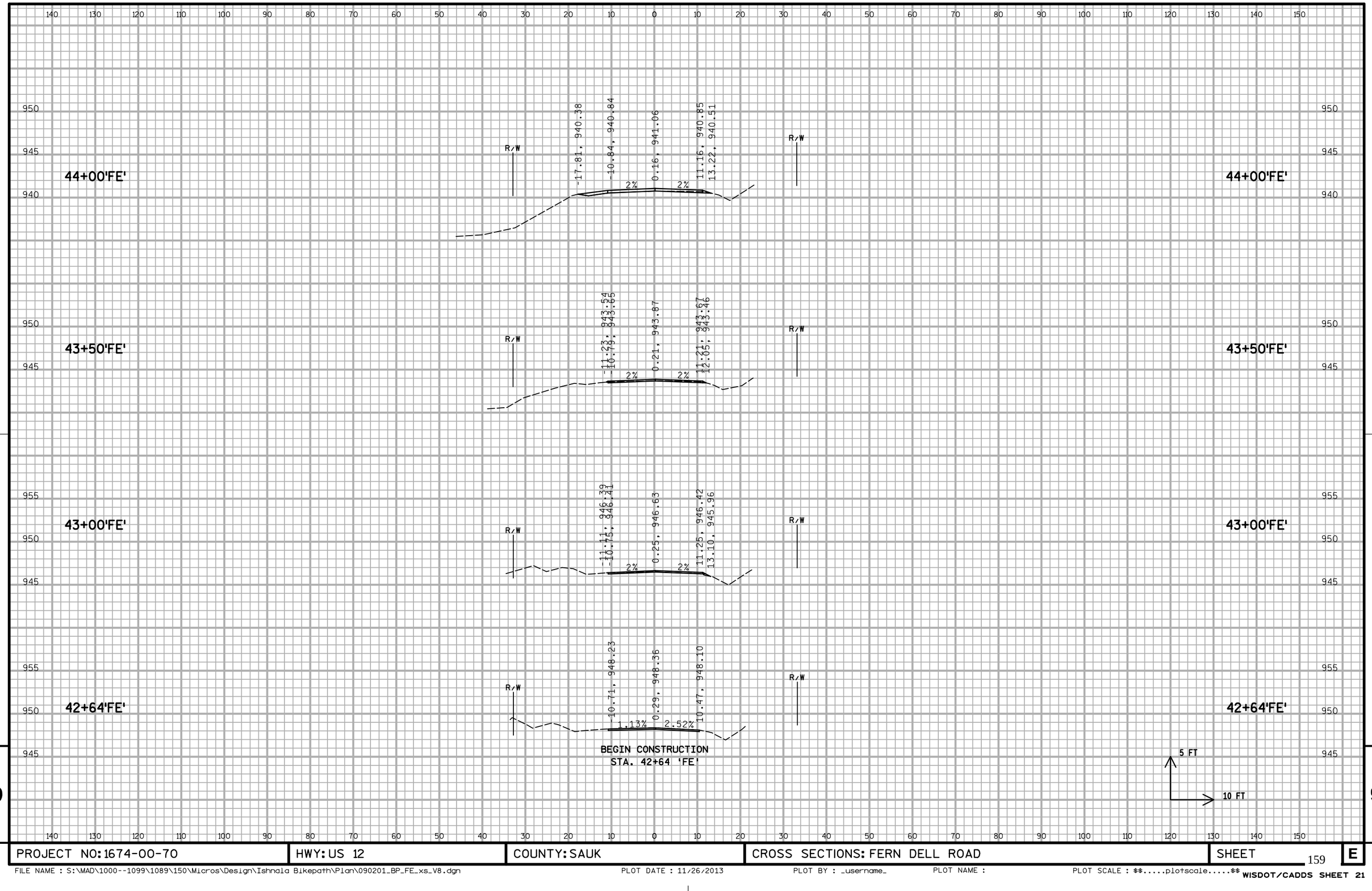

9

9

PROJECT NO:1674-00-70	HWY:US 12	COUNTY:SAUK	CROSS SECTIONS: FERN DELL ROAD	SHEET 159	E

FILE NAME : S:\MAD\1000--1099\1089\150\Micros\Design\Ishnala Bikepath\Plan\090201_BP_FE_xs_V8.dgn PLOT DATE : 11/26/2013 PLOT BY : _username_ PLOT NAME : PLOT SCALE : $$.....plotscale.....$$ WISDOT/CADDS SHEET 21

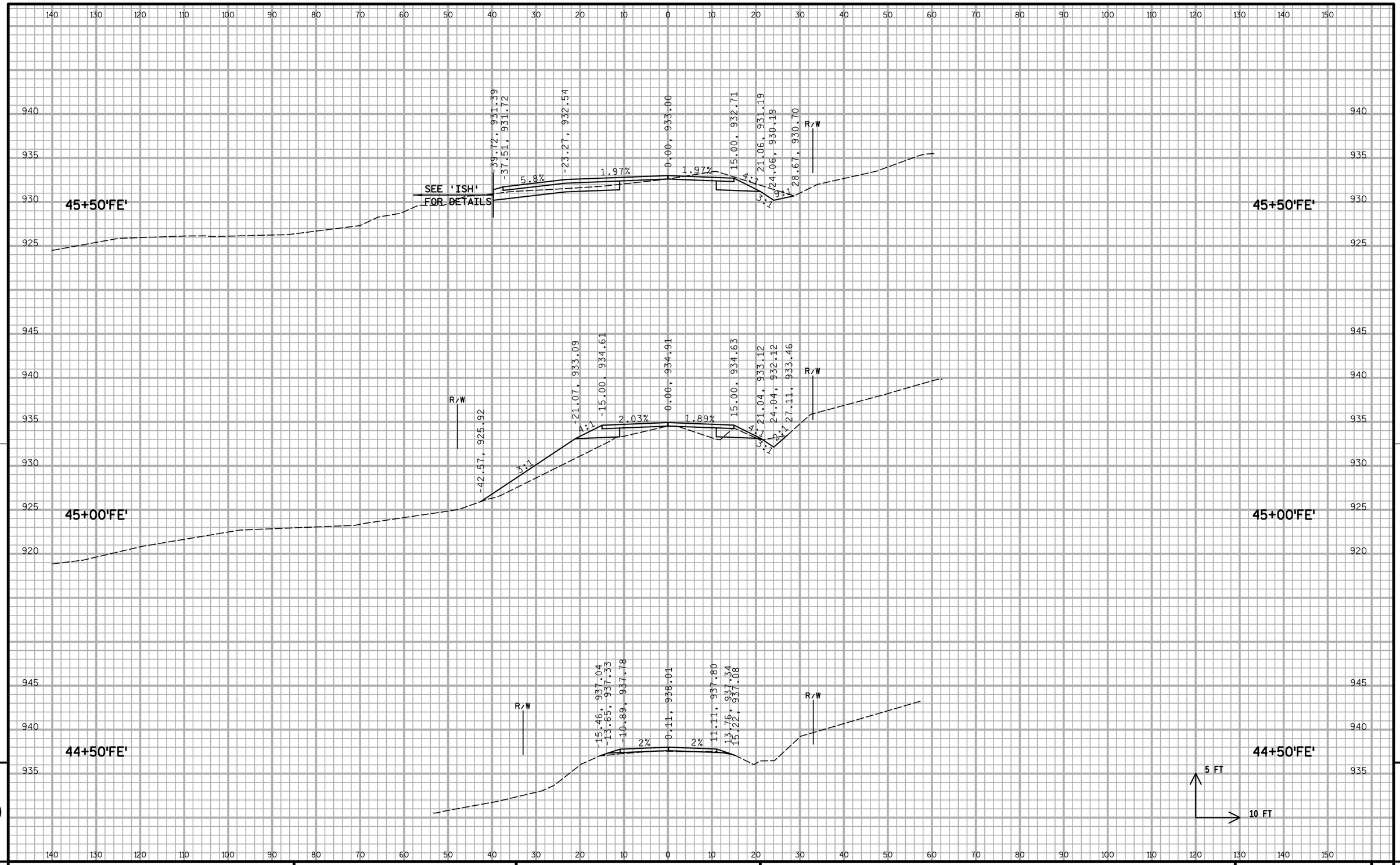

9

9

PROJECT NO: 1674-00-70	HWY: US 12	COUNTY: SAUK	CROSS SECTIONS: FERN DELL ROAD	SHEET	E

FILE NAME : S:\MAD\1000--1099\1089\150\Micros\Design\Ishnala Bikepath\Plan\090201_BP_FE_xs_V8.dgn PLOT DATE : 11/26/2013 PLOT BY : _username_ PLOT NAME : PLOT SCALE : $$.....plotscale.....$$ WISDOT/CADDS SHEET 21

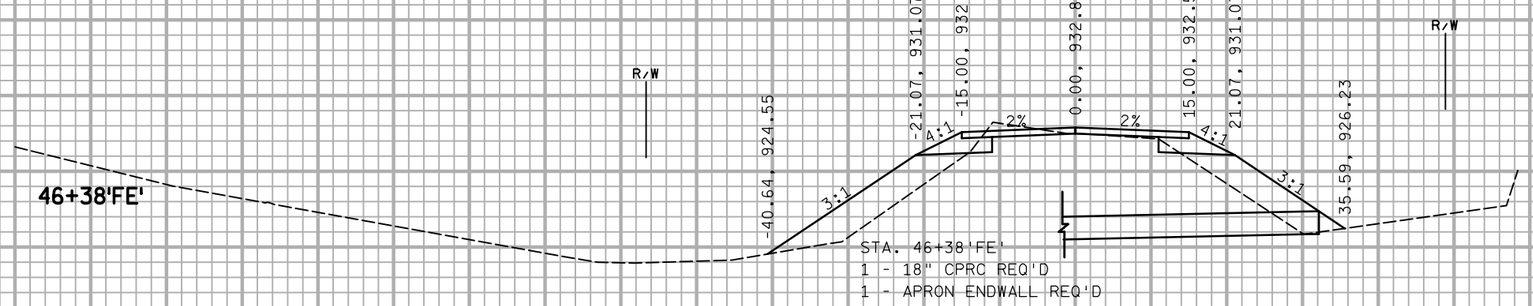
46+38'FE'
R/W
-40.64, 924.55
-21.07, 931.07
-15.00, 932.59
0.00, 932.89
15.00, 932.59
21.07, 931.07
35.59, 926.23
3:1
4:1
2%
STA. 46+38'FE'
1 - 18" CPRC REQ'D
1 - APRON ENDWALL REQ'D

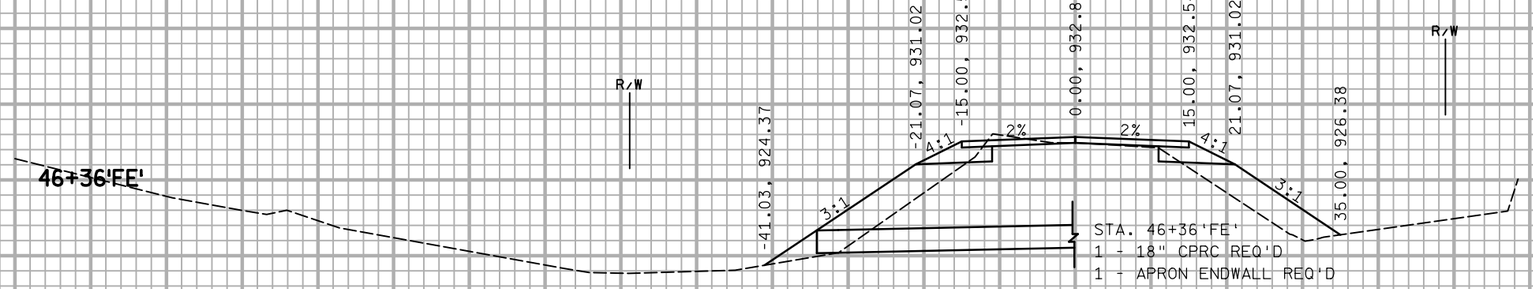
46+36'FE'
R/W
-41.03, 924.37
-21.07, 931.02
-15.00, 932.54
0.00, 932.84
15.00, 932.54
21.07, 931.02
35.00, 926.38
3:1
4:1
2%
STA. 46+36'FE'
1 - 18" CPRC REQ'D
1 - APRON ENDWALL REQ'D

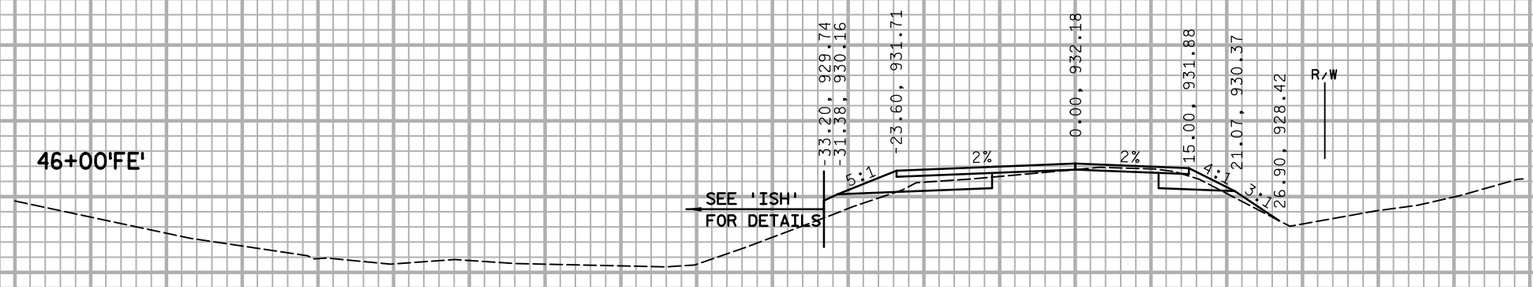
46+00'FE'
R/W
-33.20, 929.74
-31.38, 930.16
-23.60, 931.71
0.00, 932.18
15.00, 931.88
21.07, 930.37
26.90, 928.42
5:1
4:1
3:1
2%
SEE 'ISH'
FOR DETAILS

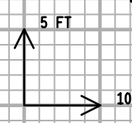
5 FT
10 FT

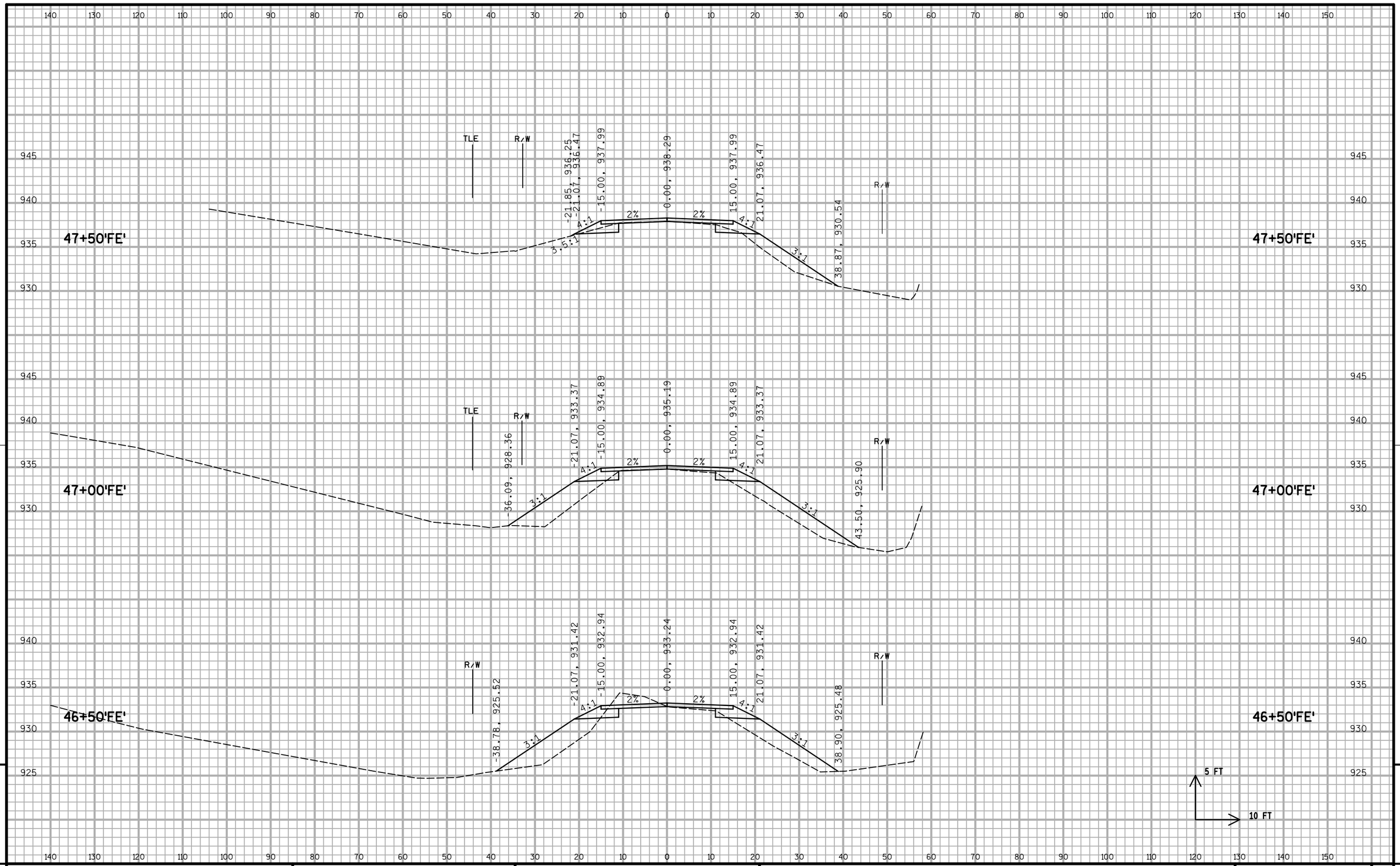

PROJECT NO: 1674-00-70	HWY: US 12	COUNTY: SAUK	CROSS SECTIONS: FERN DELL ROAD	SHEET	E

FILE NAME : S:\MAD\1000--1099\1089\150\Micros\Design\Ishnala Bikepath\Plan\090201_BP_FE_xs_V8.dgn PLOT DATE : 11/26/2013 PLOT BY : _username_ PLOT NAME : PLOT SCALE : $$.....plotscale.....$$ WISDOT/CADDS SHEET 21

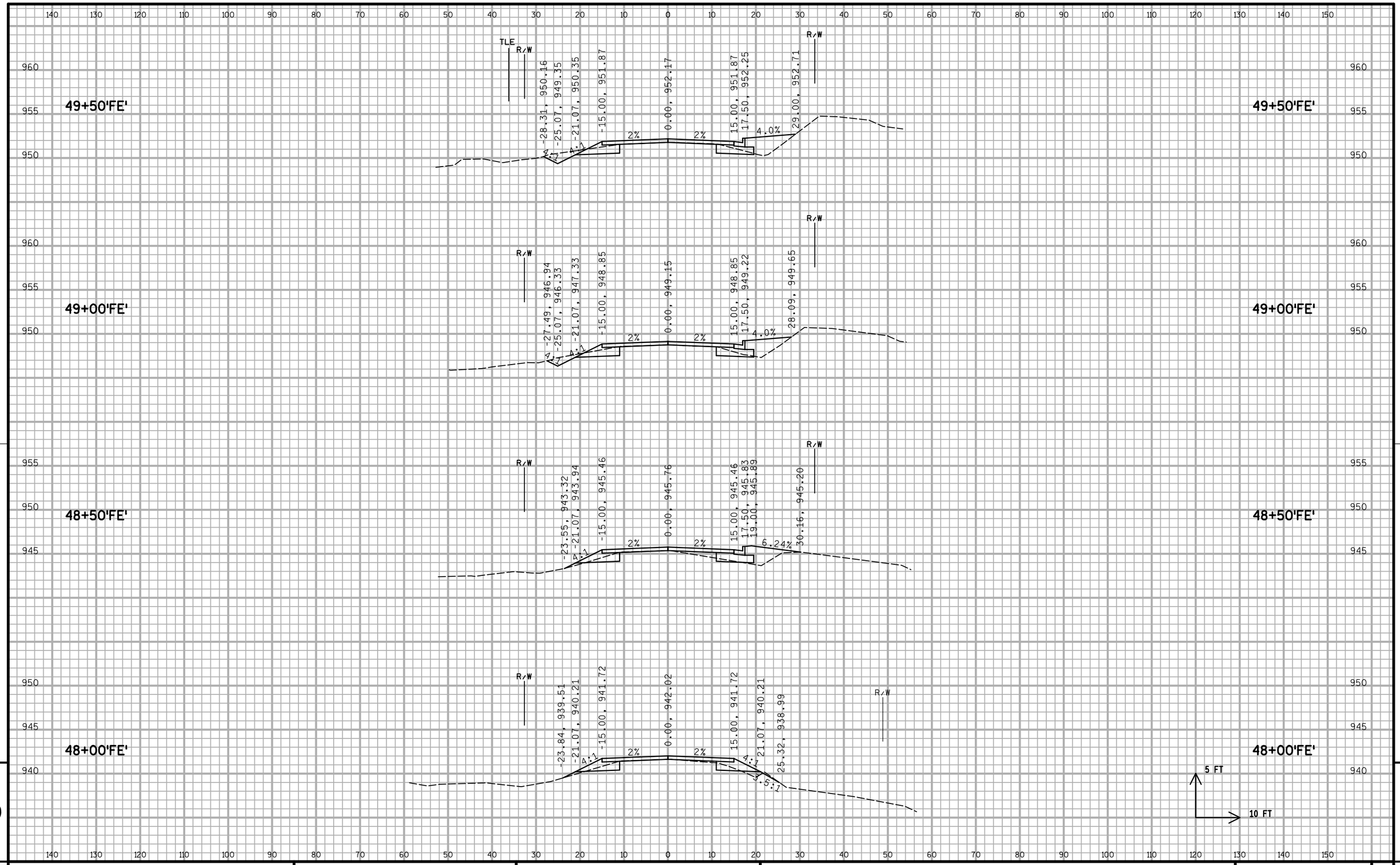

9

9

PROJECT NO: 1674-00-70	HWY: US 12	COUNTY: SAUK	CROSS SECTIONS: FERN DELL ROAD	SHEET	E

FILE NAME : S:\MAD\1000--1099\1089\150\Micros\Design\Ishnala Bikepath\Plan\090201_BP_FE_xs_V8.dgn PLOT DATE : 11/26/2013 PLOT BY : _username_ PLOT NAME : PLOT SCALE : $$.....plotscale.....$$ WISDOT/CADDS SHEET 21

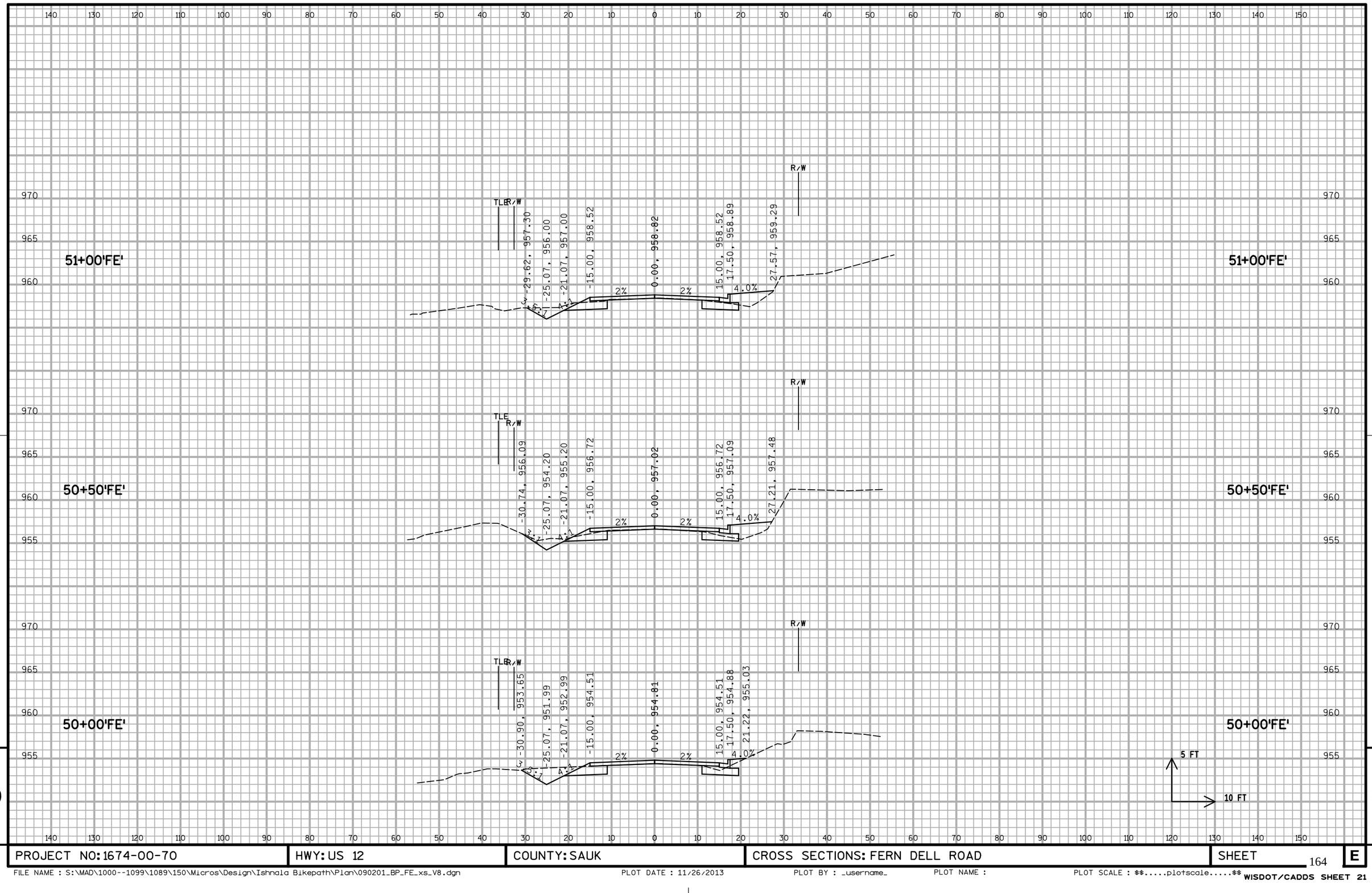

PROJECT NO: 1674-00-70	HWY: US 12	COUNTY: SAUK	CROSS SECTIONS: FERN DELL ROAD	SHEET	E

FILE NAME : S:\MAD\1000--1099\1089\150\Micros\Design\Ishnala Bikepath\Plan\090201_BP_FE_xs_V8.dgn PLOT DATE : 11/26/2013 PLOT BY : _username_ PLOT NAME : PLOT SCALE : $$.....plotscale.....$$ WISDOT/CADDS SHEET 21

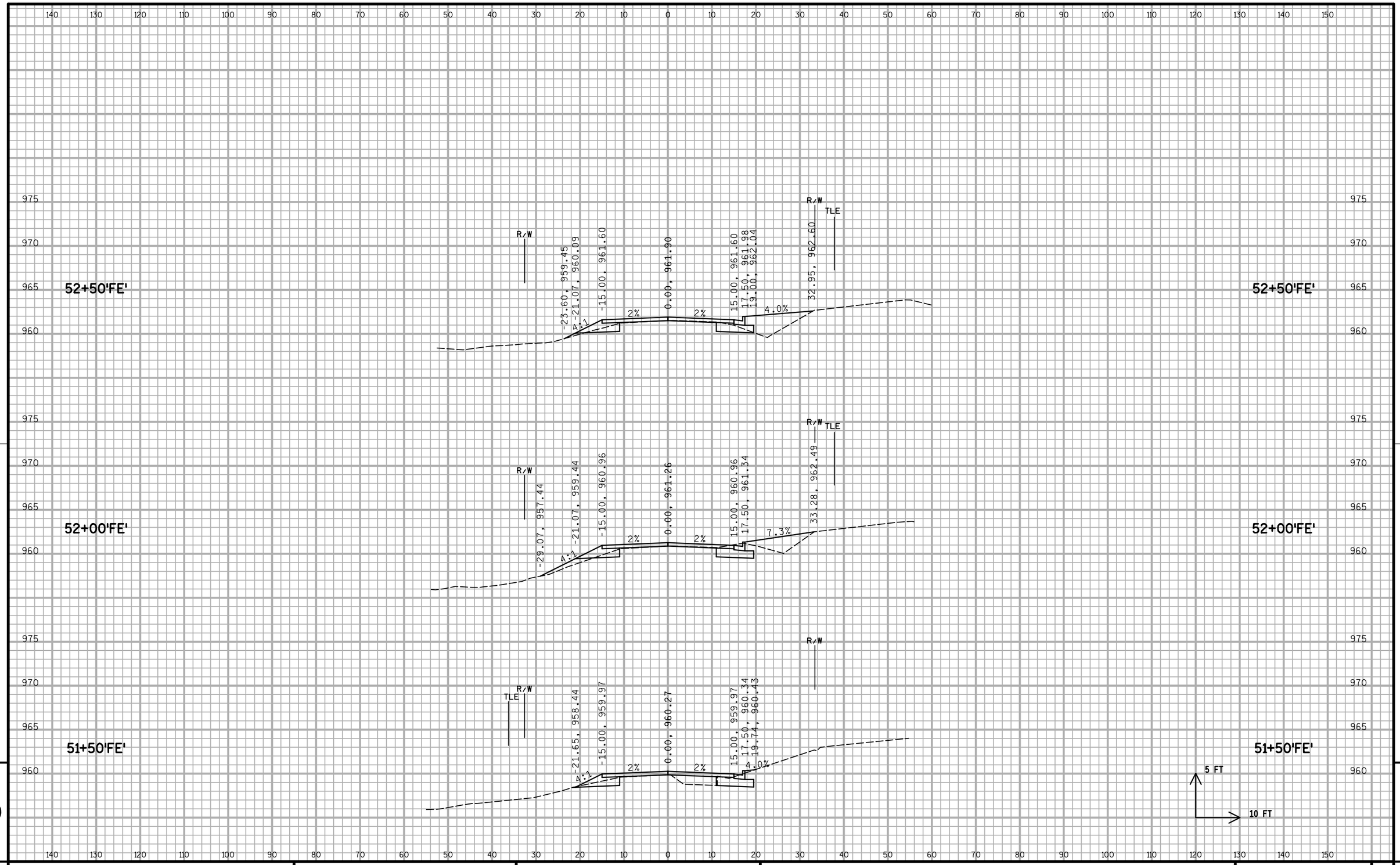

PROJECT NO: 1674-00-70	HWY: US 12	COUNTY: SAUK	CROSS SECTIONS: FERN DELL ROAD	SHEET 165	E

FILE NAME : S:\MAD\1000--1099\1089\150\Micros\Design\Ishnala Bikepath\Plan\090201_BP_FE_xs_V8.dgn PLOT DATE : 11/26/2013 PLOT BY : _username_ PLOT NAME : PLOT SCALE : $$.....plotscale.....$$ WISDOT/CADDS SHEET 21

54+50'FE'

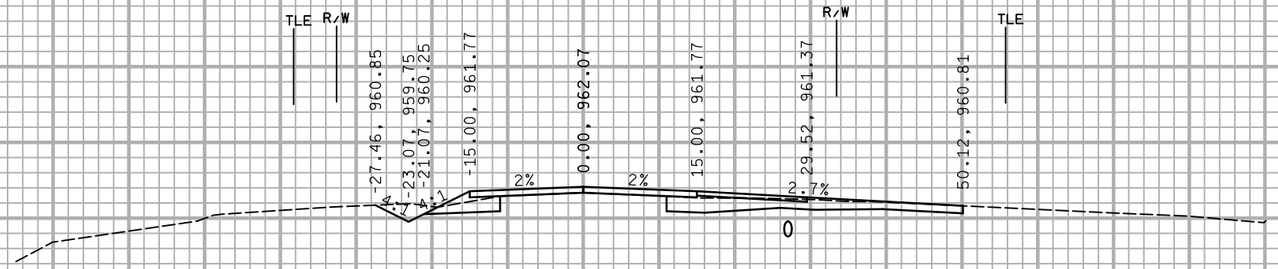

54+50'FE'

54+00'FE'

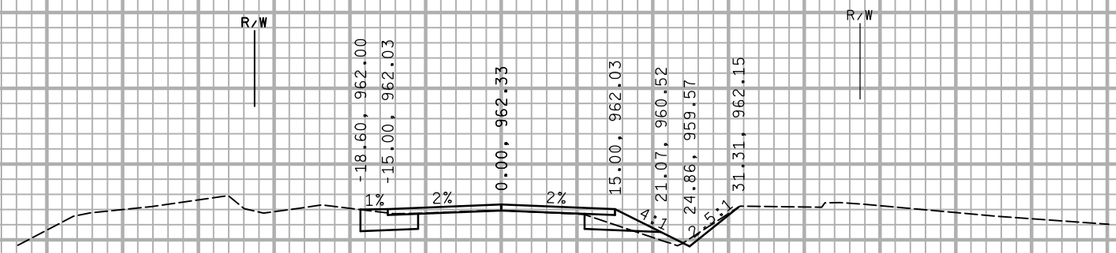

54+00'FE'

53+50'FE'

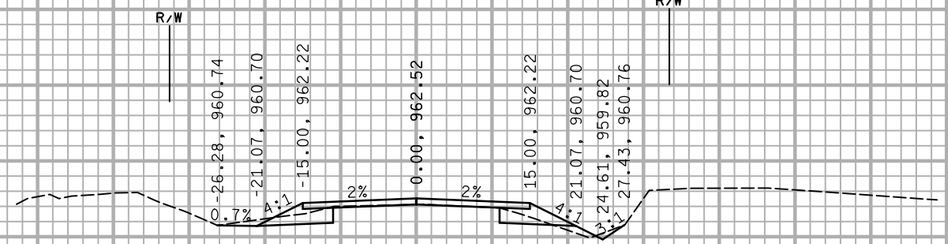

53+50'FE'

53+00'FE'

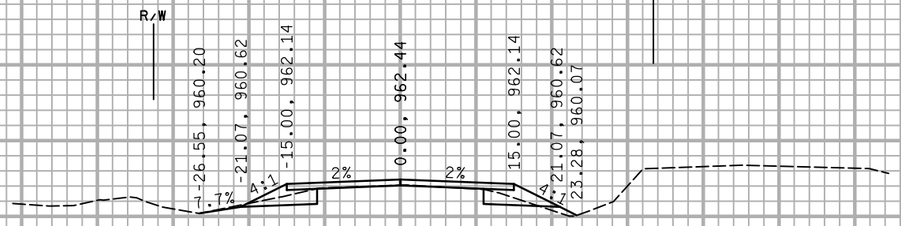

53+00'FE'

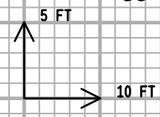

9

9

PROJECT NO: 1674-00-70	HWY: US 12	COUNTY: SAUK	CROSS SECTIONS: FERN DELL ROAD	SHEET	E

FILE NAME : S:\MAD\1000--1099\1089\150\Micros\Design\Ishnala Bikepath\Plan\090201_BP_FE_xs_V8.dgn PLOT DATE : 11/26/2013 PLOT BY : _username_ PLOT NAME : PLOT SCALE : $$.....plotscale.....$$ WISDOT/CADDS SHEET 21

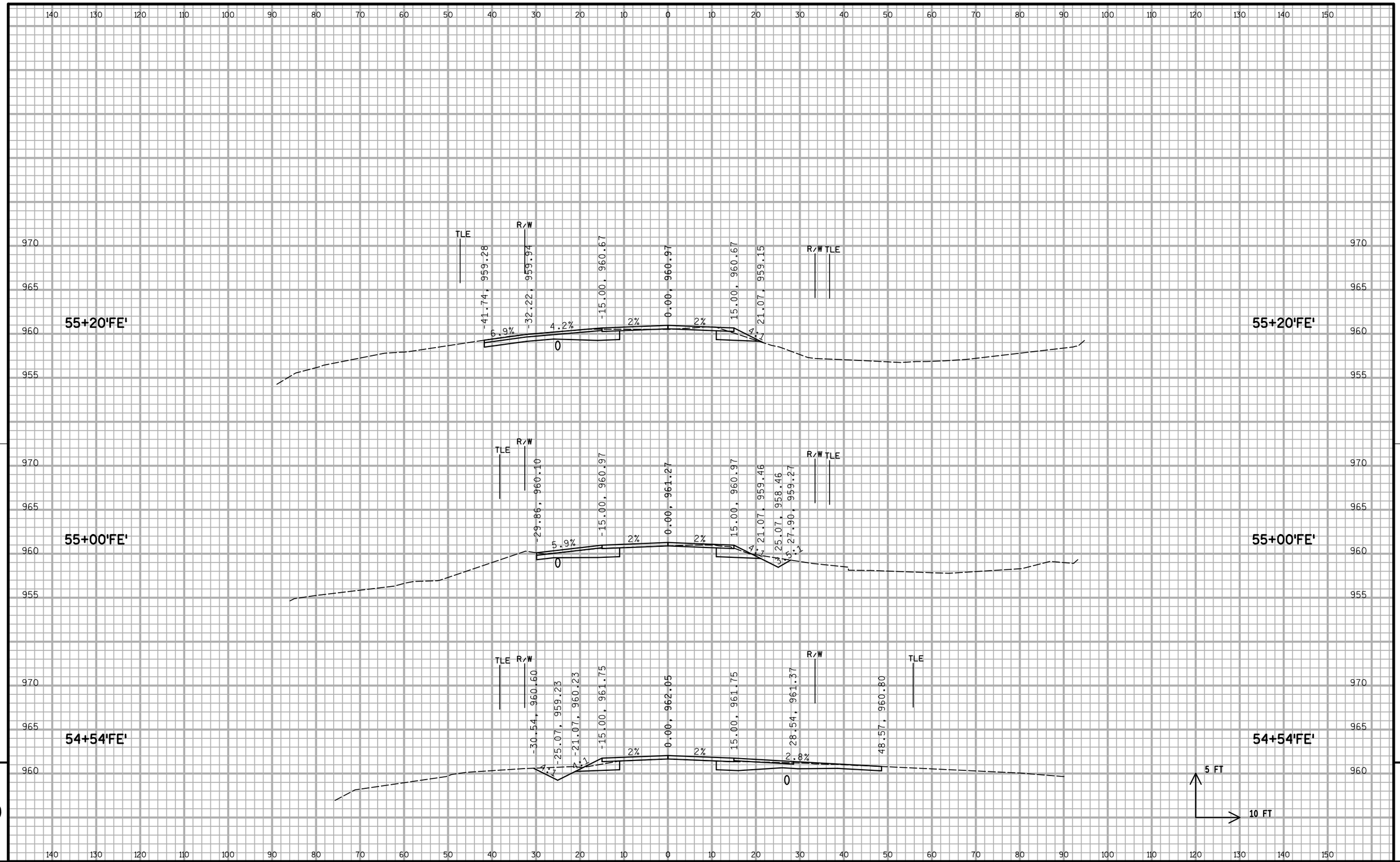

9

9

PROJECT NO: 1674-00-70	HWY: US 12	COUNTY: SAUK	CROSS SECTIONS: FERN DELL ROAD	SHEET 167	E

FILE NAME : S:\MAD\1000--1099\1089\150\Micros\Design\Ishnala Bikepath\Plan\090201_BP_FE_xs_V8.dgn PLOT DATE : 11/26/2013 PLOT BY : _username_ PLOT NAME : PLOT SCALE : $$.....plotscale.....$$

WISDOT/CADDS SHEET 21

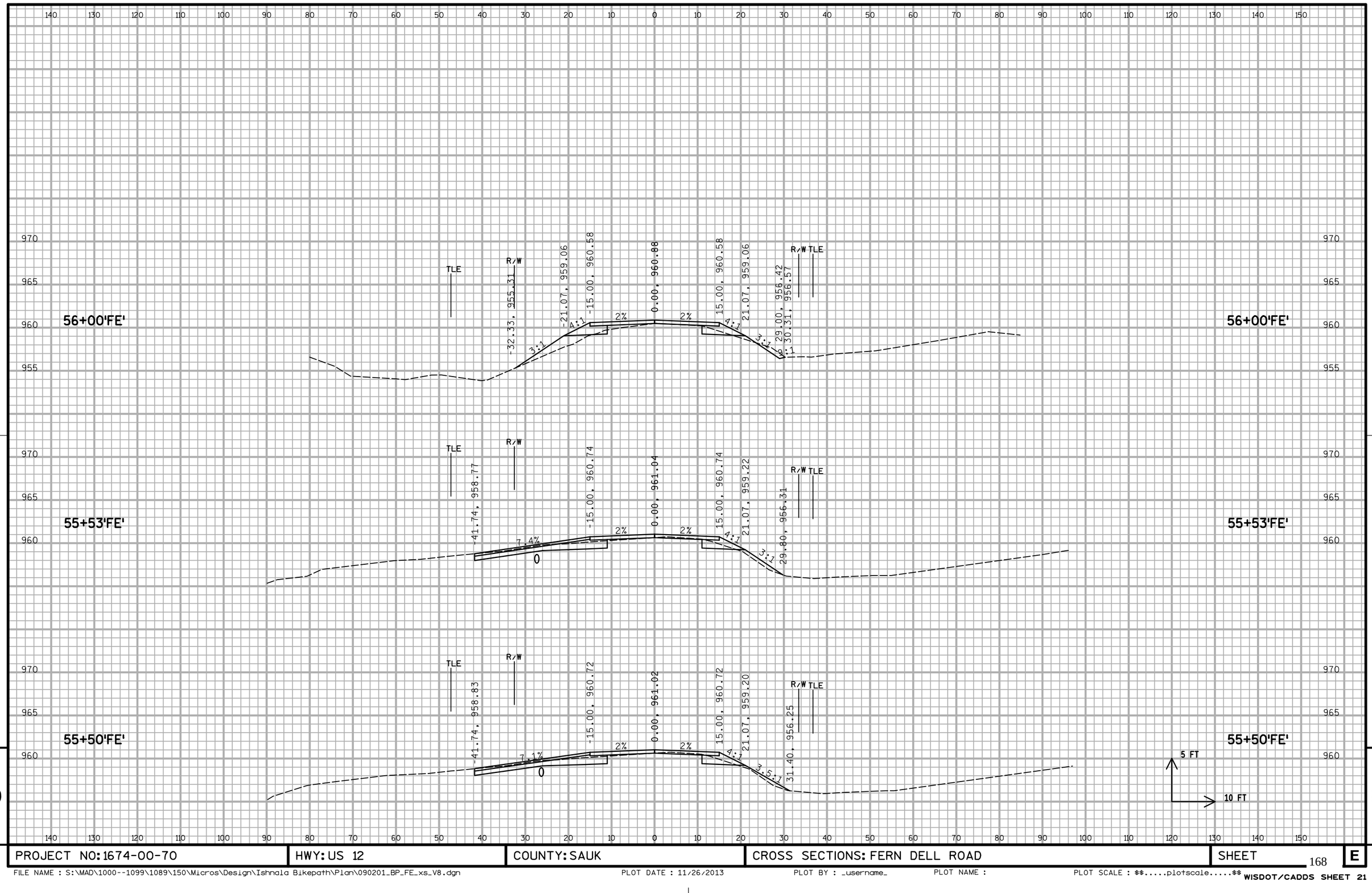

PROJECT NO: 1674-00-70	HWY: US 12	COUNTY: SAUK	CROSS SECTIONS: FERN DELL ROAD	SHEET 168	E

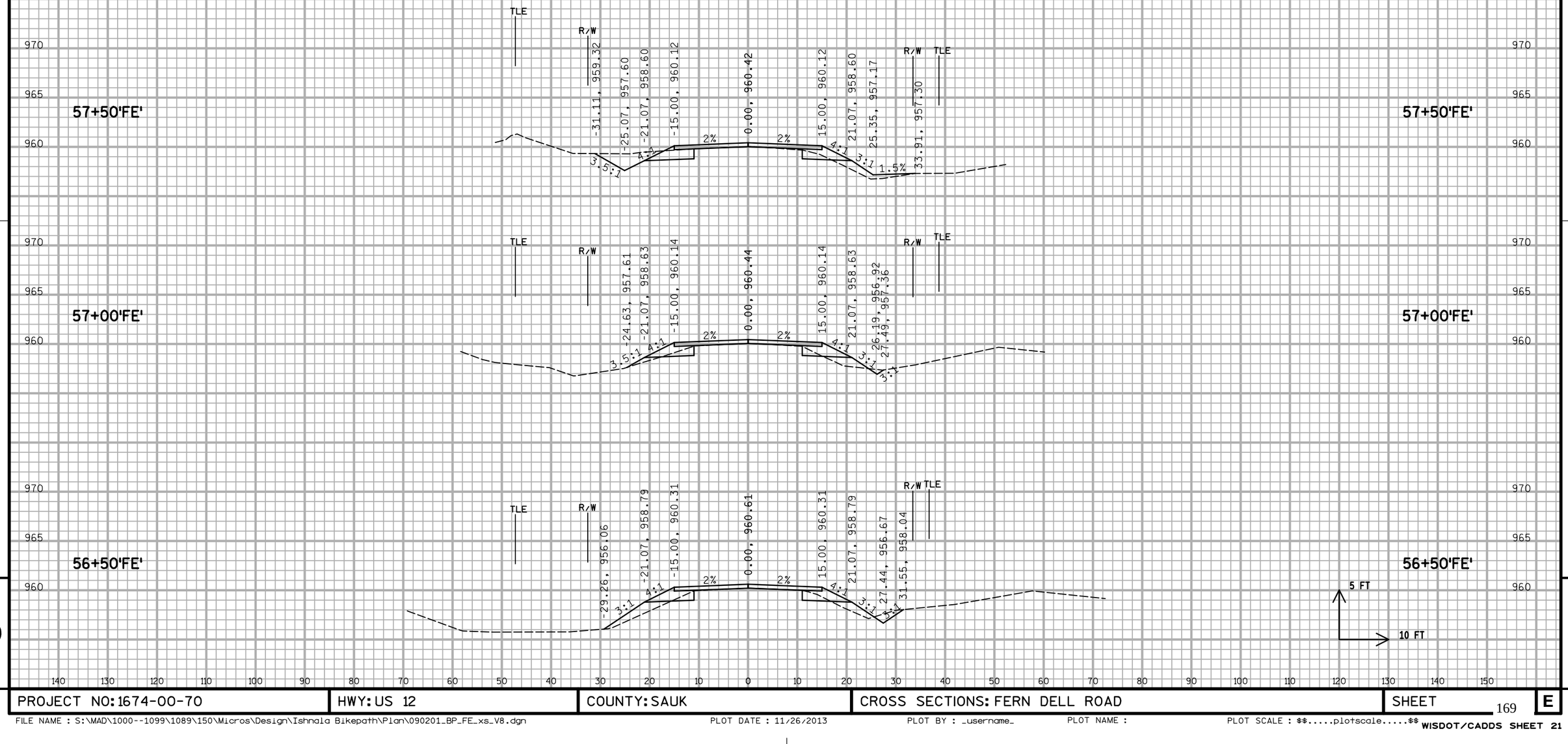

9

9

PROJECT NO: 1674-00-70	HWY: US 12	COUNTY: SAUK	CROSS SECTIONS: FERN DELL ROAD	SHEET	E

FILE NAME : S:\MAD\1000--1099\1089\150\Micros\Design\Ishnala Bikepath\Plan\090201_BP_FE_xs_V8.dgn PLOT DATE : 11/26/2013 PLOT BY : _username_ PLOT NAME : PLOT SCALE : $$.....plotscale.....$$ WISDOT/CADDS SHEET 21

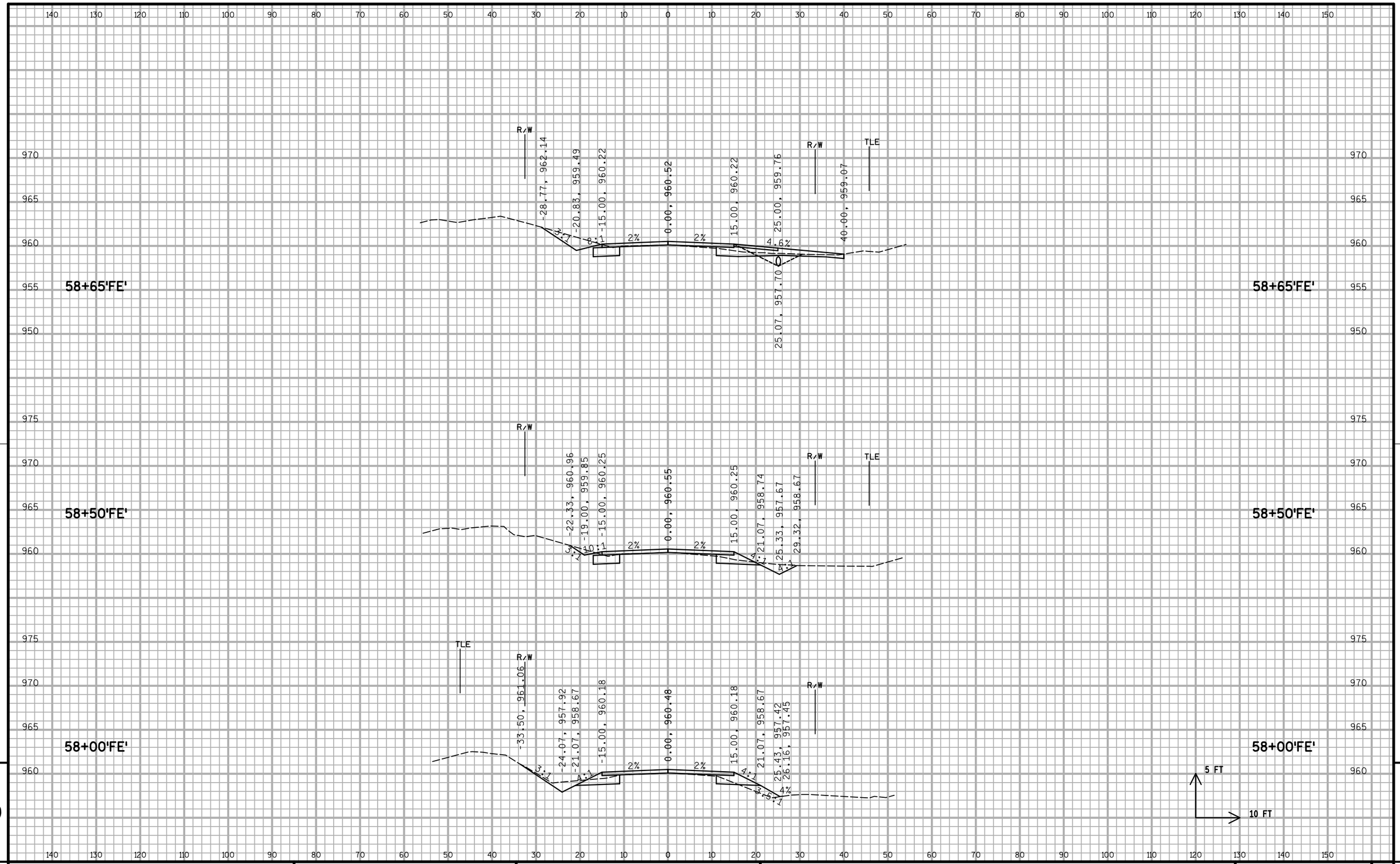

9

PROJECT NO: 1674-00-70	HWY: US 12	COUNTY: SAUK	CROSS SECTIONS: FERN DELL ROAD	SHEET 170	E

FILE NAME : S:\MAD\1000--1099\1089\150\Micros\Design\Ishnala Bikepath\Plan\090201_BP_FE_xs_V8.dgn PLOT DATE : 11/26/2013 PLOT BY : _username_ PLOT NAME : PLOT SCALE : $$.....plotscale.....$$ WISDOT/CADDS SHEET 21

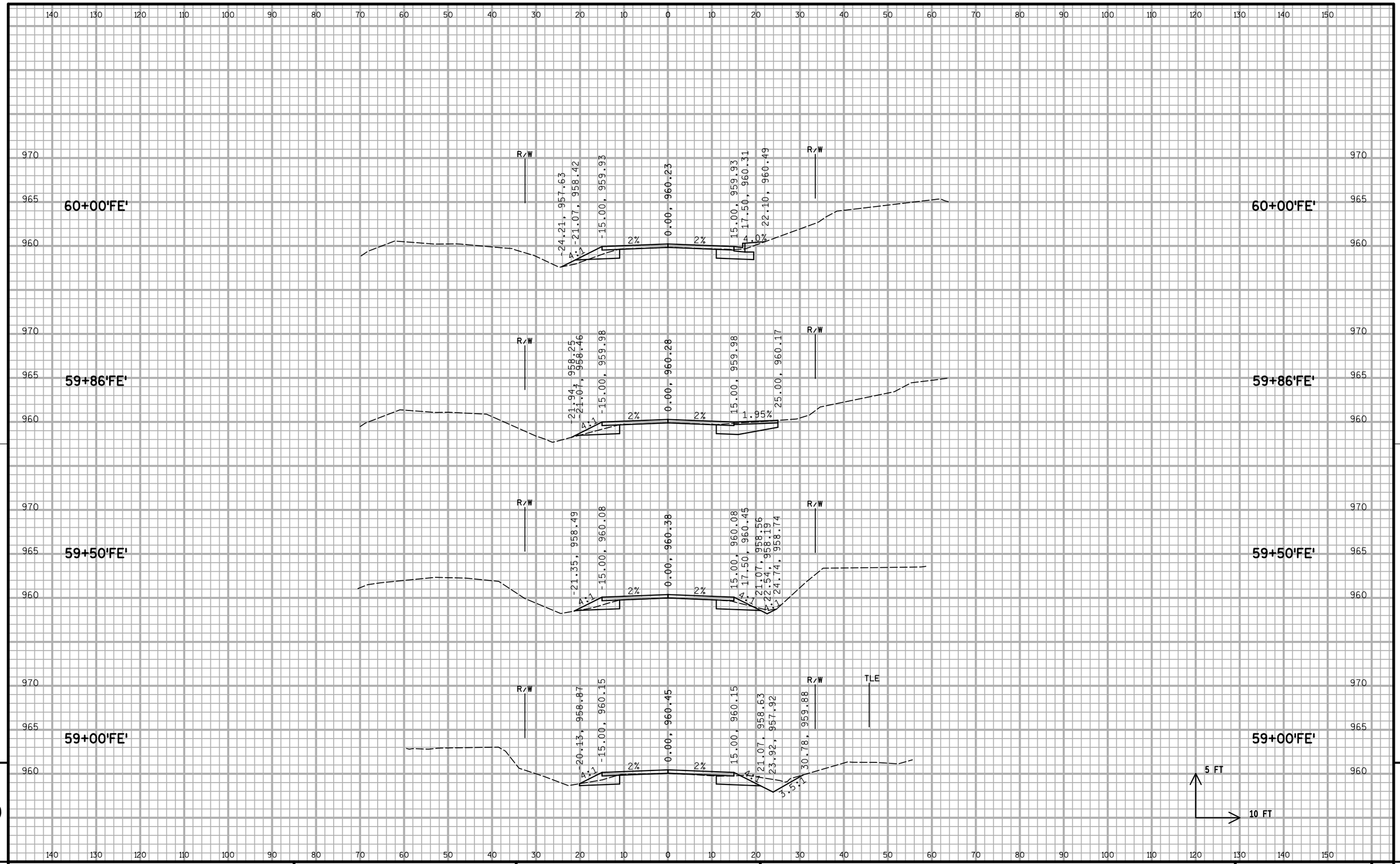

9

9

PROJECT NO:1674-00-70	HWY:US 12	COUNTY:SAUK	CROSS SECTIONS: FERN DELL ROAD	SHEET 171	E

FILE NAME : S:\MAD\1000--1099\1089\150\Micros\Design\Ishnala Bikepath\Plan\090201_BP_FE_xs_V8.dgn PLOT DATE : 11/26/2013 PLOT BY : _username_ PLOT NAME : PLOT SCALE : $$.....plotscale.....$$ WISDOT/CADDS SHEET 21

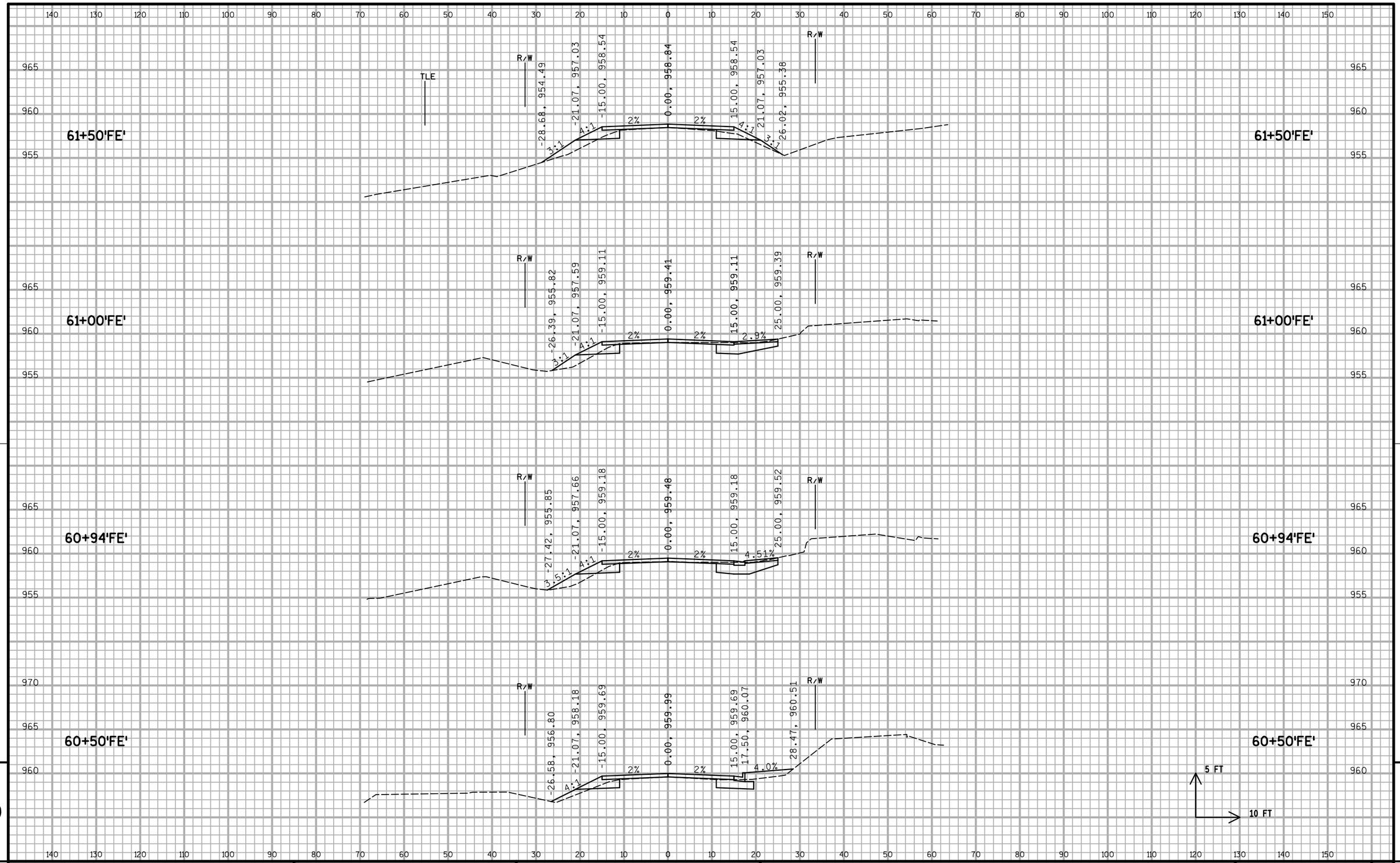

9

9

PROJECT NO: 1674-00-70	HWY: US 12	COUNTY: SAUK	CROSS SECTIONS: FERN DELL ROAD	SHEET	E

FILE NAME : S:\MAD\1000--1099\1089\150\Micros\Design\Ishnala Bikepath\Plan\090201_BP_FE_xs_V8.dgn PLOT DATE : 11/26/2013 PLOT BY : _username_ PLOT NAME : PLOT SCALE : $$.....plotscale.....$$ WISDOT/CADDS SHEET 21

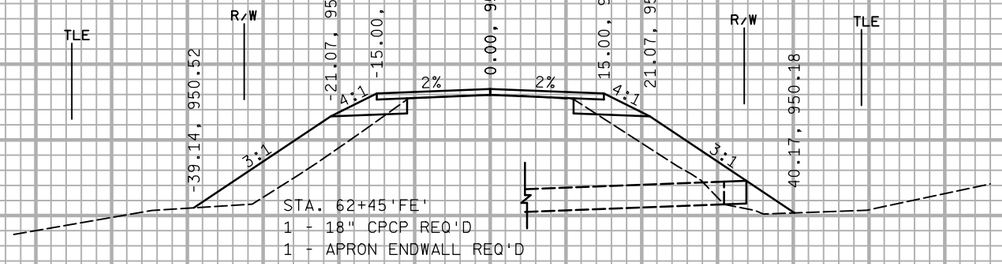

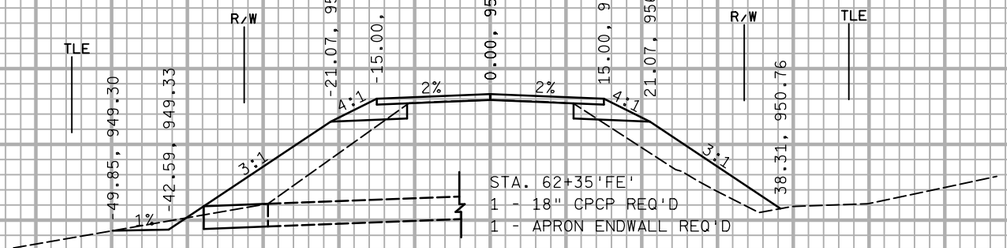

PROJECT NO: 1674-00-70	HWY: US 12	COUNTY: SAUK	CROSS SECTIONS: FERN DELL ROAD	SHEET	E

FILE NAME : S:\MAD\1000--1099\1089\150\Micros\Design\Ishnala Bikepath\Plan\090201_BP_FE_xs_V8.dgn PLOT DATE : 11/26/2013 PLOT BY : _username_ PLOT NAME : PLOT SCALE : $$.....plotscale.....$$ WISDOT/CADDS SHEET 21

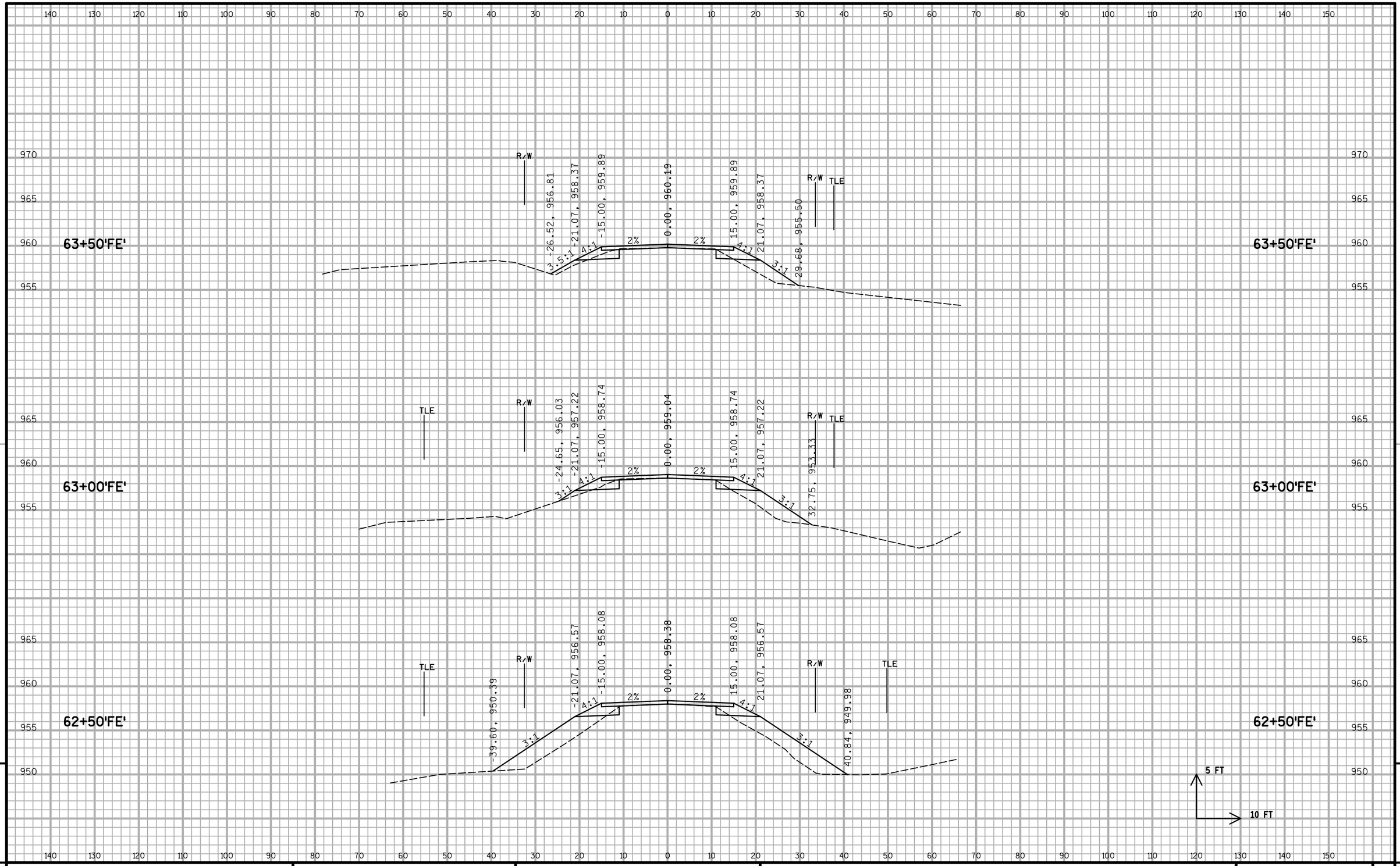

9

PROJECT NO: 1674-00-70	HWY: US 12	COUNTY: SAUK	CROSS SECTIONS: FERN DELL ROAD	SHEET 174	E

FILE NAME : S:\MAD\1000--1099\1089\150\Micros\Design\Ishnala Bikepath\Plan\090201_BP_FE_xs_V8.dgn PLOT DATE : 11/26/2013 PLOT BY : _username_ PLOT NAME : PLOT SCALE : $$.....plotscale.....$$ WISDOT/CADDS SHEET 21

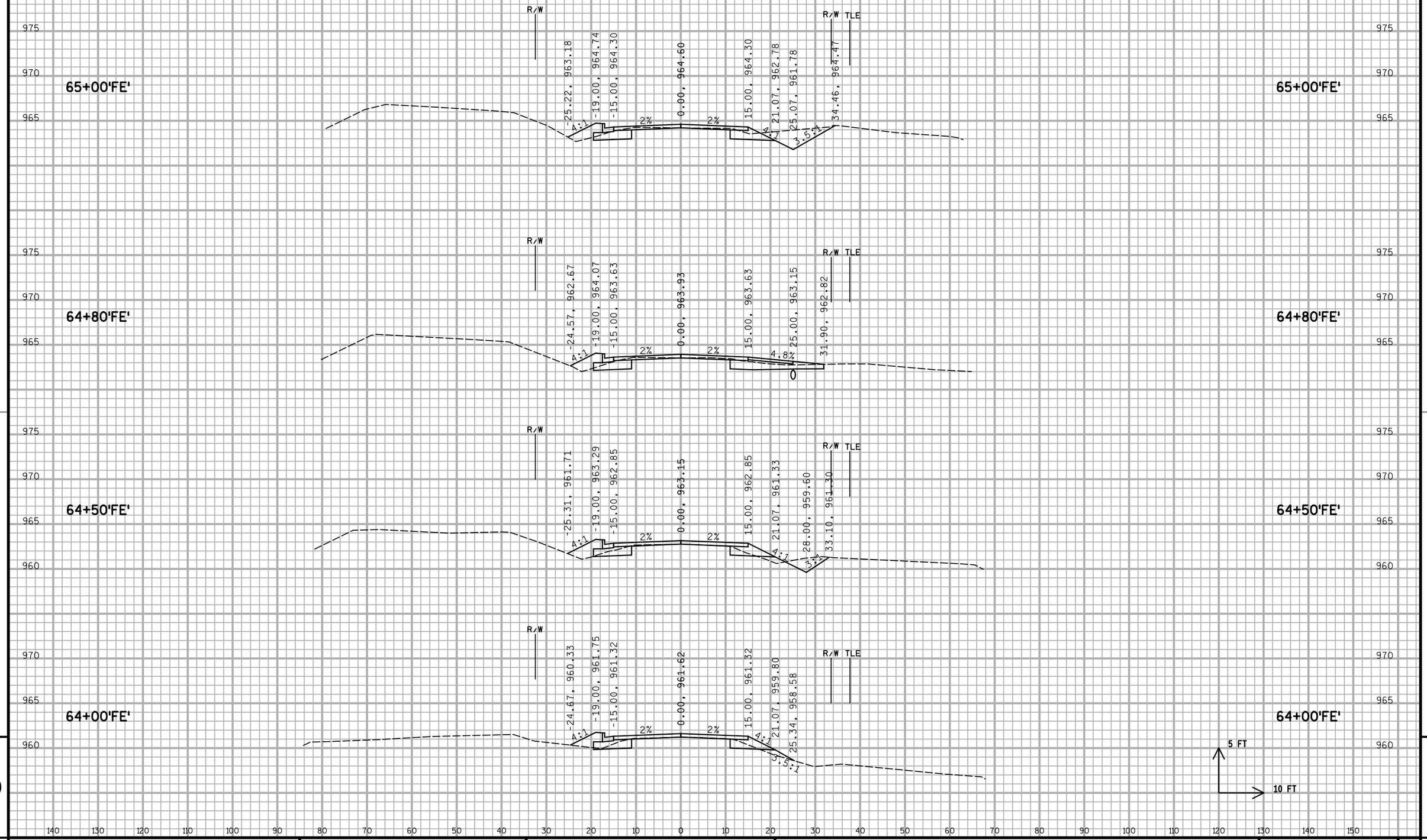

9

9

PROJECT NO:1674-00-70	HWY:US 12	COUNTY:SAUK	CROSS SECTIONS: FERN DELL ROAD	SHEET 175	E

FILE NAME : S:\MAD\1000--1099\1089\150\Micros\Design\Ishnala Bikepath\Plan\090201_BP_FE_xs_V8.dgn PLOT DATE : 11/26/2013 PLOT BY : _username_ PLOT NAME : PLOT SCALE : $$.....plotscale.....$$ WISDOT/CADDS SHEET 21

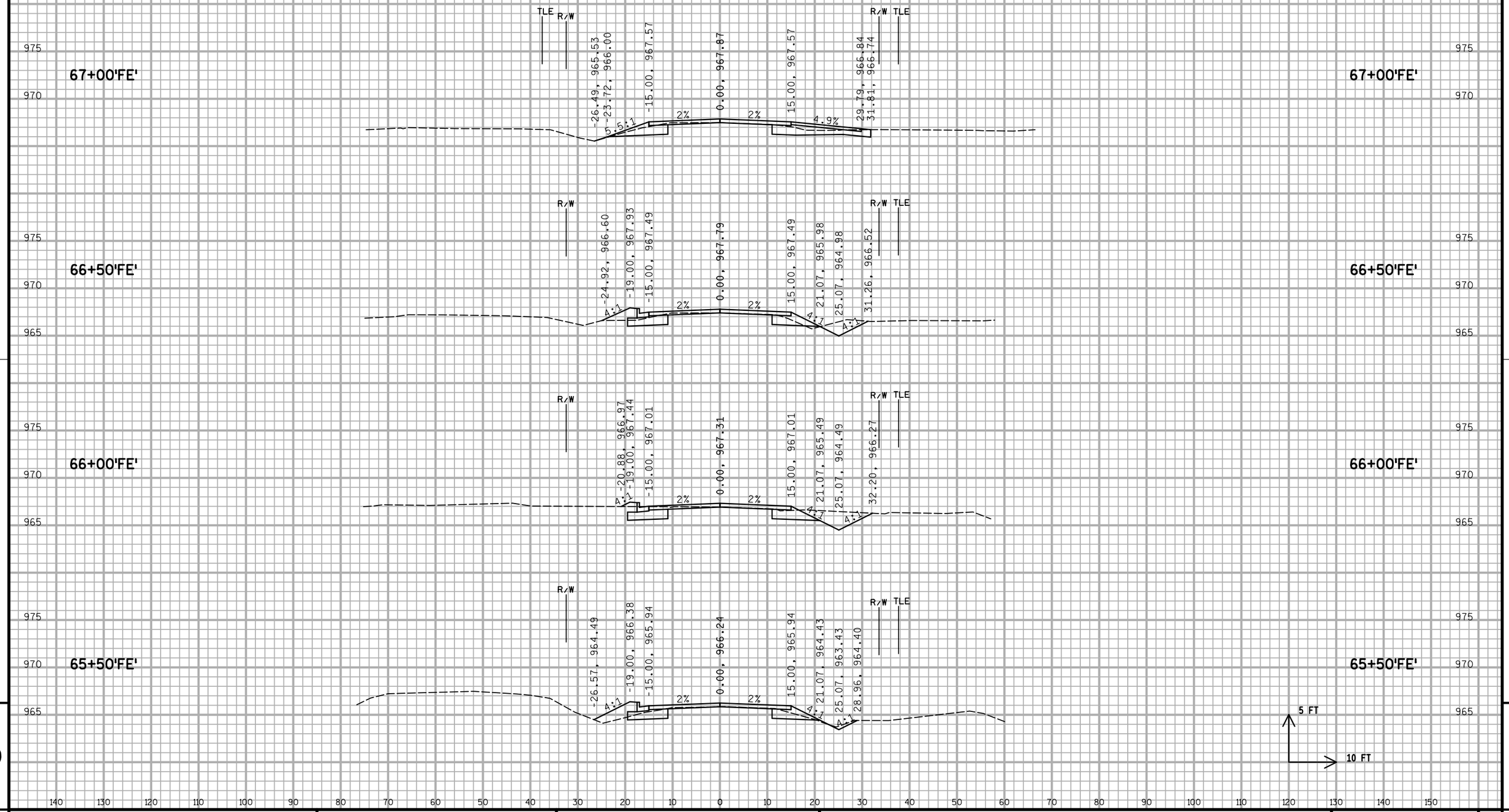

9

9

PROJECT NO: 1674-00-70	HWY: US 12	COUNTY: SAUK	CROSS SECTIONS: FERN DELL ROAD	SHEET	E

FILE NAME : S:\MAD\1000--1099\1089\150\Micros\Design\Ishnala Bikepath\Plan\090201_BP_FE_xs_V8.dgn PLOT DATE : 11/26/2013 PLOT BY : _username_ PLOT NAME : PLOT SCALE : $$.....plotscale.....$$ WISDOT/CADDS SHEET 21

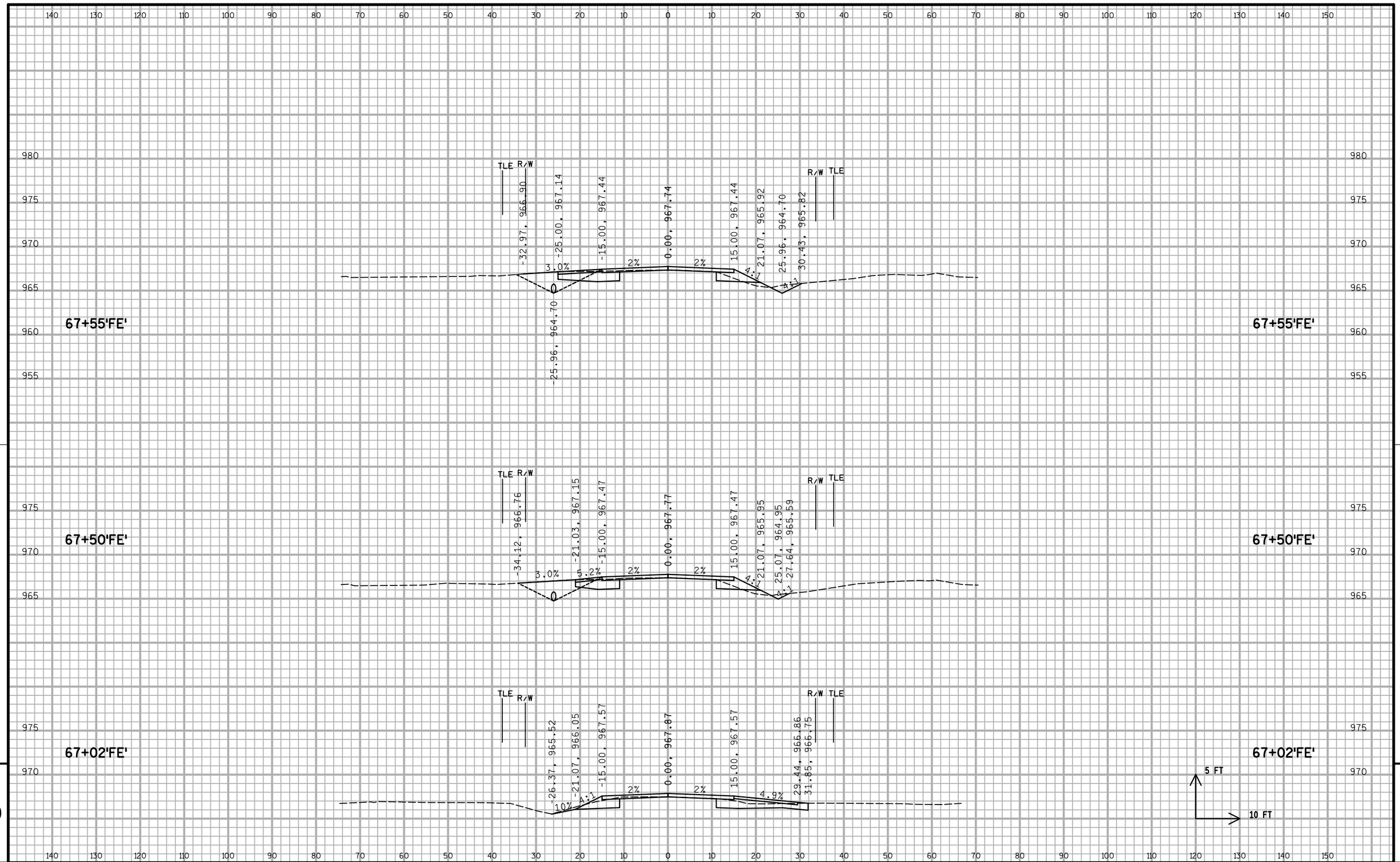

9

PROJECT NO: 1674-00-70	HWY: US 12	COUNTY: SAUK	CROSS SECTIONS: FERN DELL ROAD	SHEET 177	E

FILE NAME : S:\MAD\1000--1099\1089\150\Micros\Design\Ishnala Bikepath\Plan\090201_BP_FE_xs_V8.dgn PLOT DATE : 11/26/2013 PLOT BY : _username_ PLOT NAME : PLOT SCALE : $$.....plotscale.....$$ WISDOT/CADDS SHEET 21

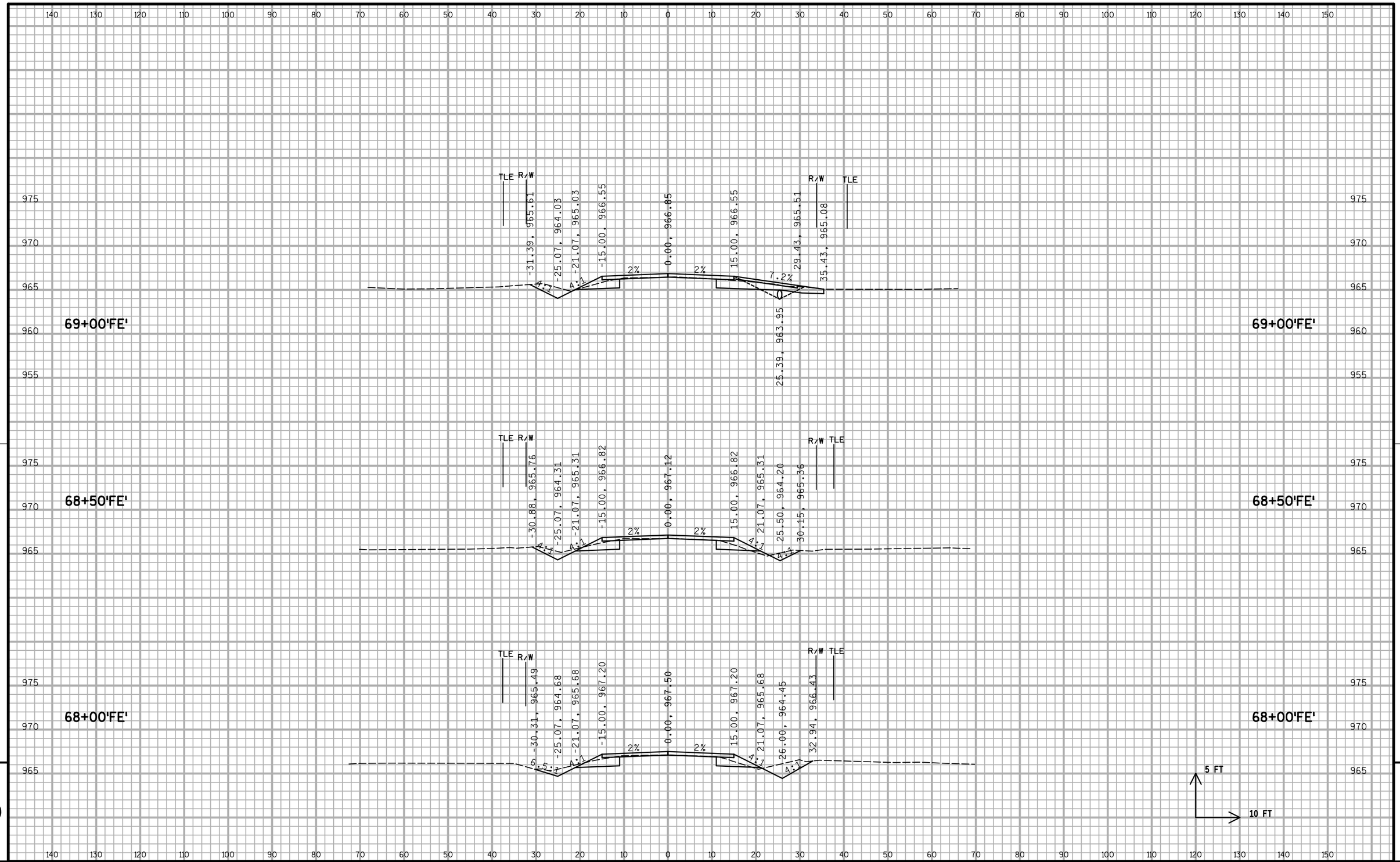

PROJECT NO: 1674-00-70	HWY: US 12	COUNTY: SAUK	CROSS SECTIONS: FERN DELL ROAD	SHEET 178	E

FILE NAME : S:\MAD\1000--1099\1089\150\Micros\Design\Ishnala Bikepath\Plan\090201_BP_FE_xs_V8.dgn PLOT DATE : 11/26/2013 PLOT BY : _username_ PLOT NAME : PLOT SCALE : $$.....plotscale.....$$ WISDOT/CADDS SHEET 21

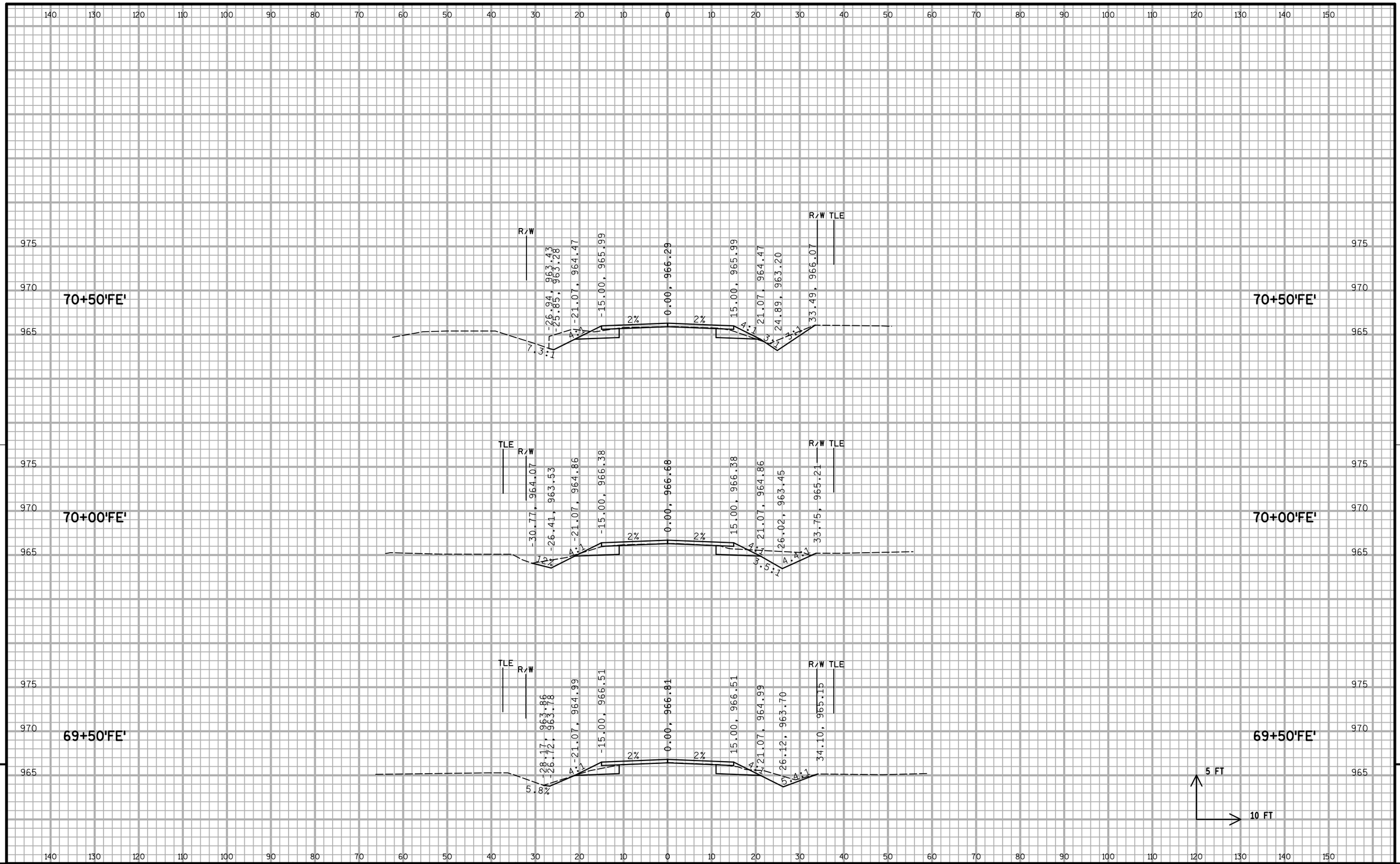

PROJECT NO: 1674-00-70	HWY: US 12	COUNTY: SAUK	CROSS SECTIONS: FERN DELL ROAD	SHEET 179	E

FILE NAME : S:\MAD\1000--1099\1089\150\Micros\Design\Ishnala Bikepath\Plan\090201_BP_FE_xs_V8.dgn PLOT DATE : 11/26/2013 PLOT BY : _username_ PLOT NAME : PLOT SCALE : $$.....plotscale.....$$

WISDOT/CADDS SHEET 21

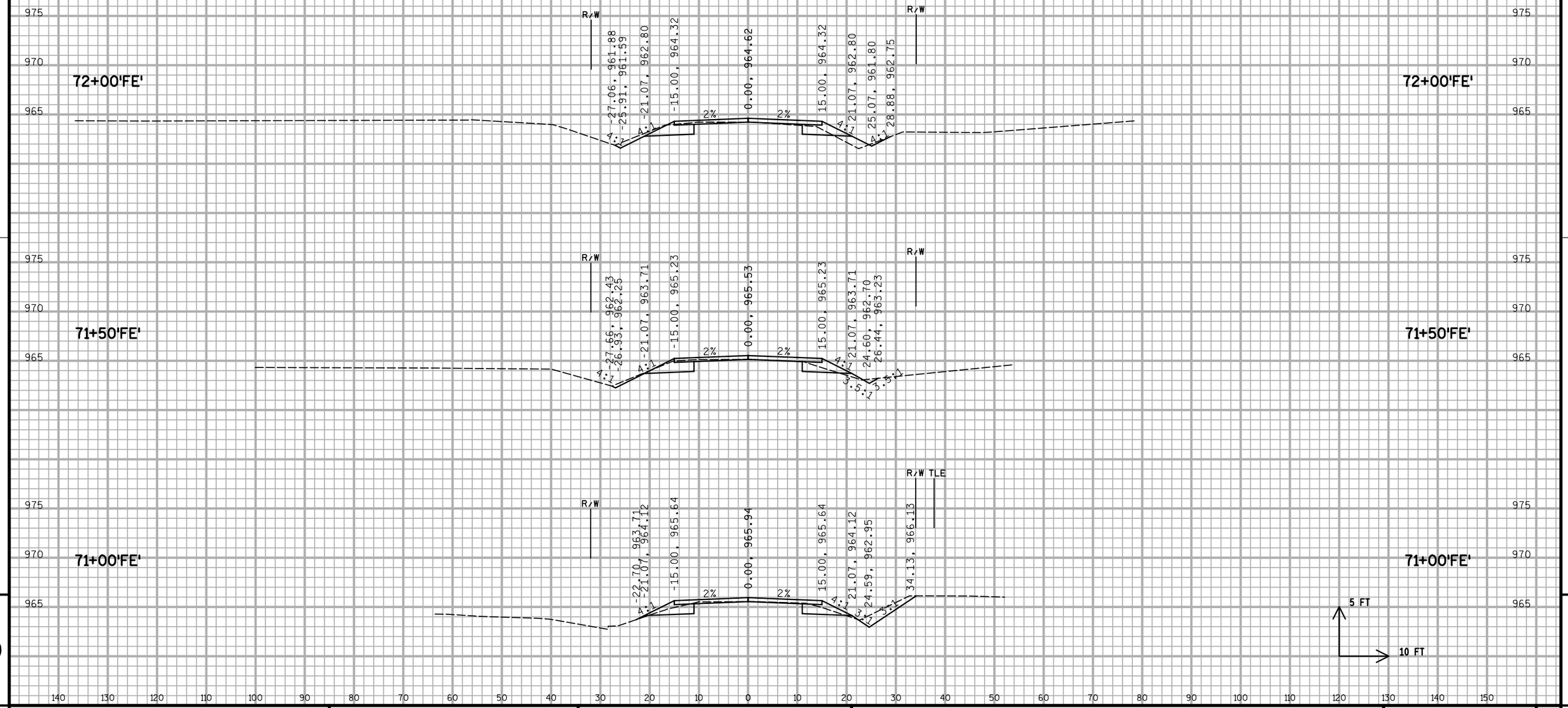

9

9

PROJECT NO: 1674-00-70	HWY: US 12	COUNTY: SAUK	CROSS SECTIONS: FERN DELL ROAD	SHEET 180	E

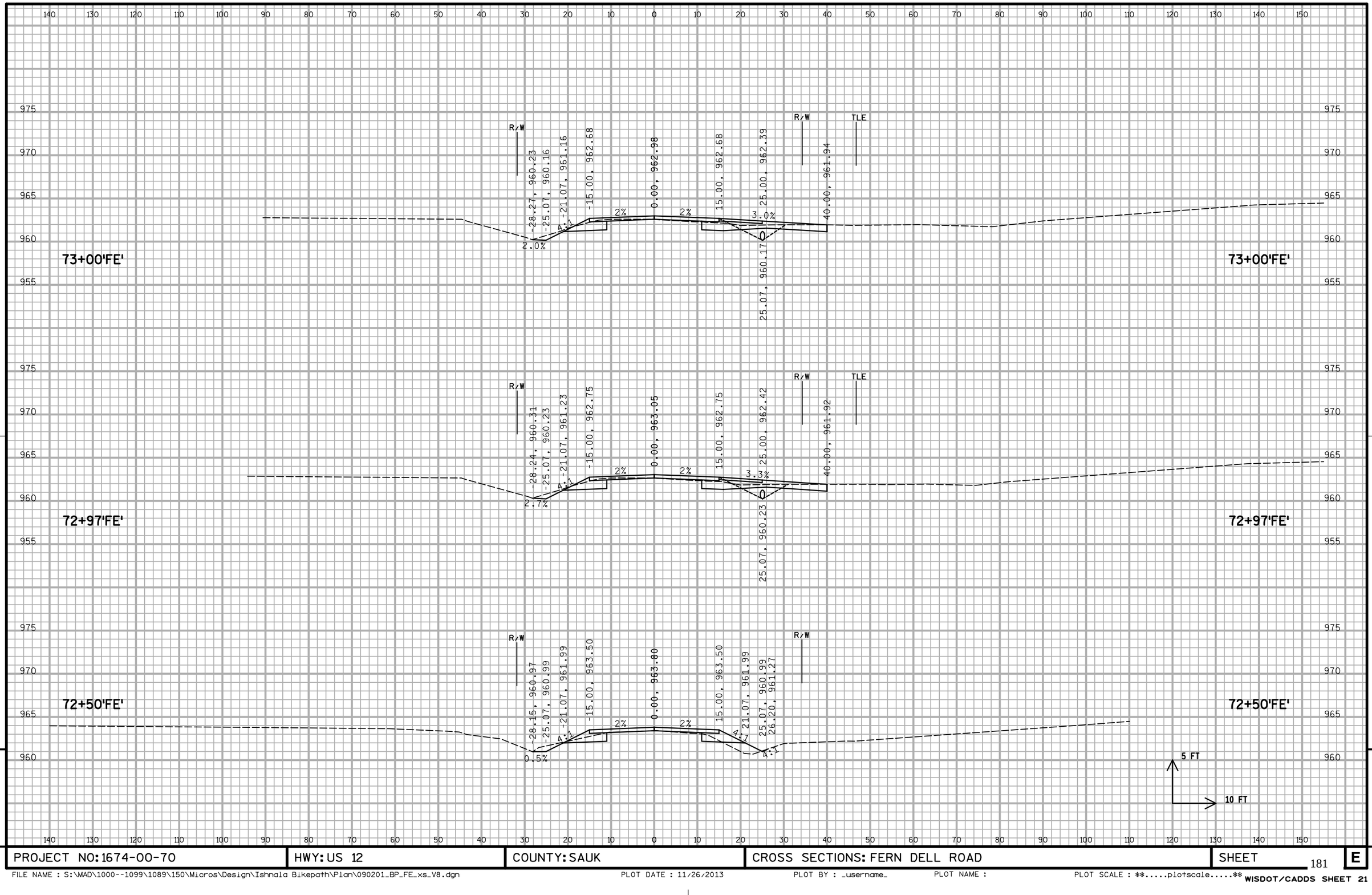

9

9

PROJECT NO: 1674-00-70	HWY: US 12	COUNTY: SAUK	CROSS SECTIONS: FERN DELL ROAD	SHEET	E

FILE NAME : S:\MAD\1000--1099\1089\150\Micros\Design\Ishnala Bikepath\Plan\090201_BP_FE_xs_V8.dgn PLOT DATE : 11/26/2013 PLOT BY : _username_ PLOT NAME : PLOT SCALE : $$.....plotscale.....$$ WISDOT/CADDS SHEET 21

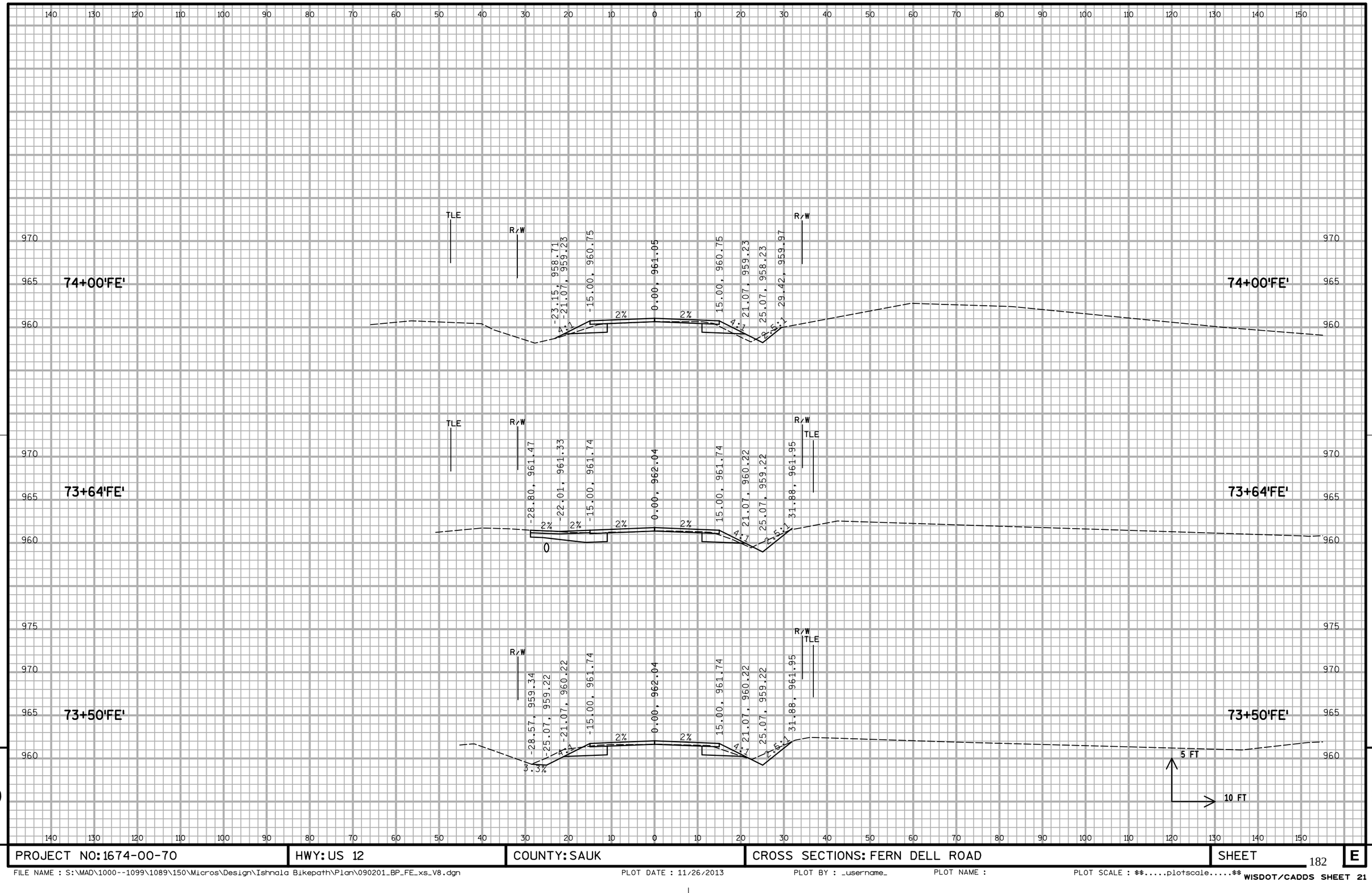

9

PROJECT NO: 1674-00-70	HWY: US 12	COUNTY: SAUK	CROSS SECTIONS: FERN DELL ROAD	SHEET	E

FILE NAME : S:\MAD\1000--1099\1089\150\Micros\Design\Ishnala Bikepath\Plan\090201_BP_FE_xs_V8.dgn PLOT DATE : 11/26/2013 PLOT BY : _username_ PLOT NAME : PLOT SCALE : $$.....plotscale.....$$ WISDOT/CADDS SHEET 21

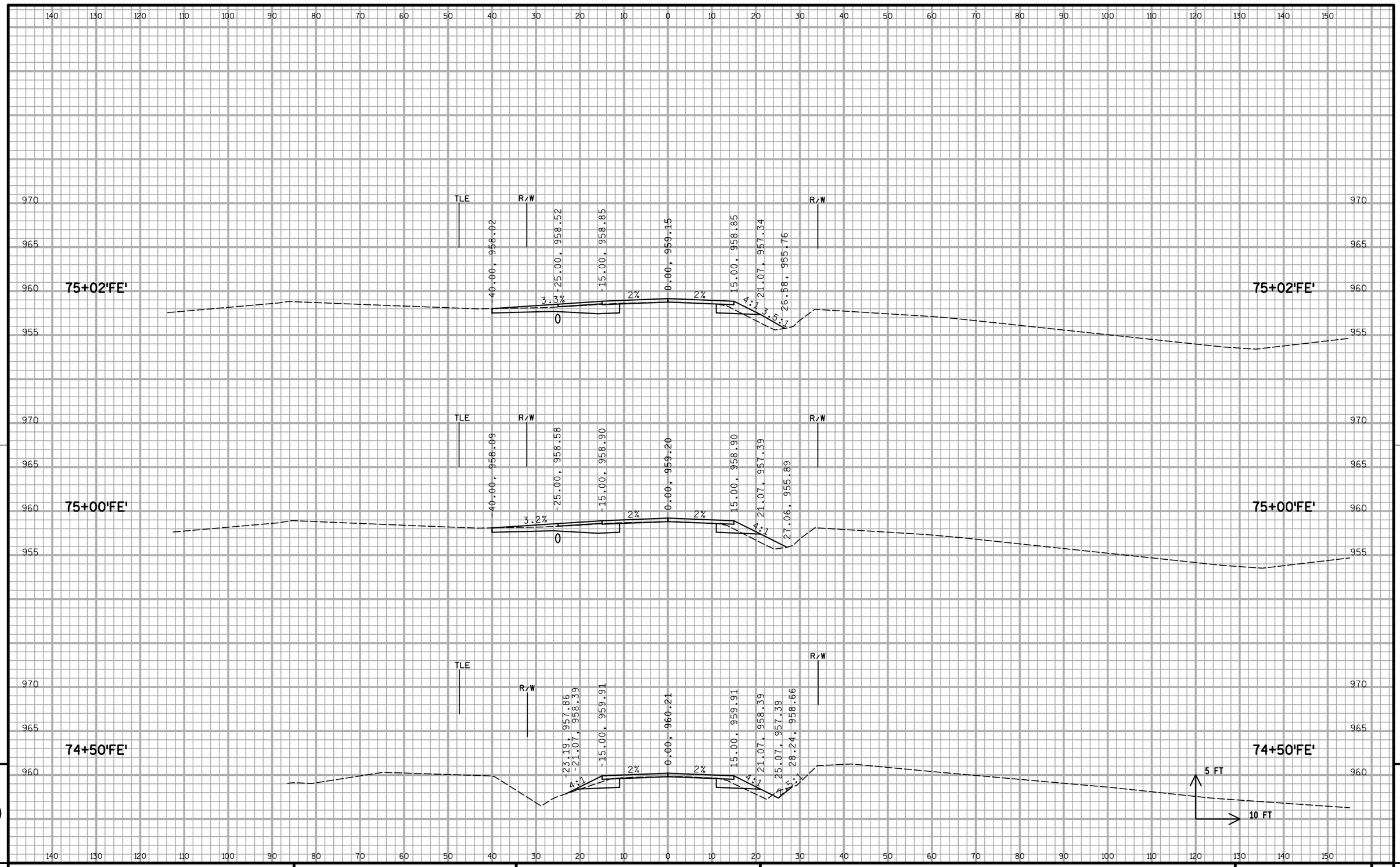

PROJECT NO: 1674-00-70	HWY: US 12	COUNTY: SAUK	CROSS SECTIONS: FERN DELL ROAD	SHEET 183	E

FILE NAME : S:\MAD\1000--1099\1089\150\Micros\Design\Ishnala Bikepath\Plan\090201_BP_FE_xs_V8.dgn PLOT DATE : 11/26/2013 PLOT BY : _username_ PLOT NAME : PLOT SCALE : $$.....plotscale.....$$ WISDOT/CADDS SHEET 21

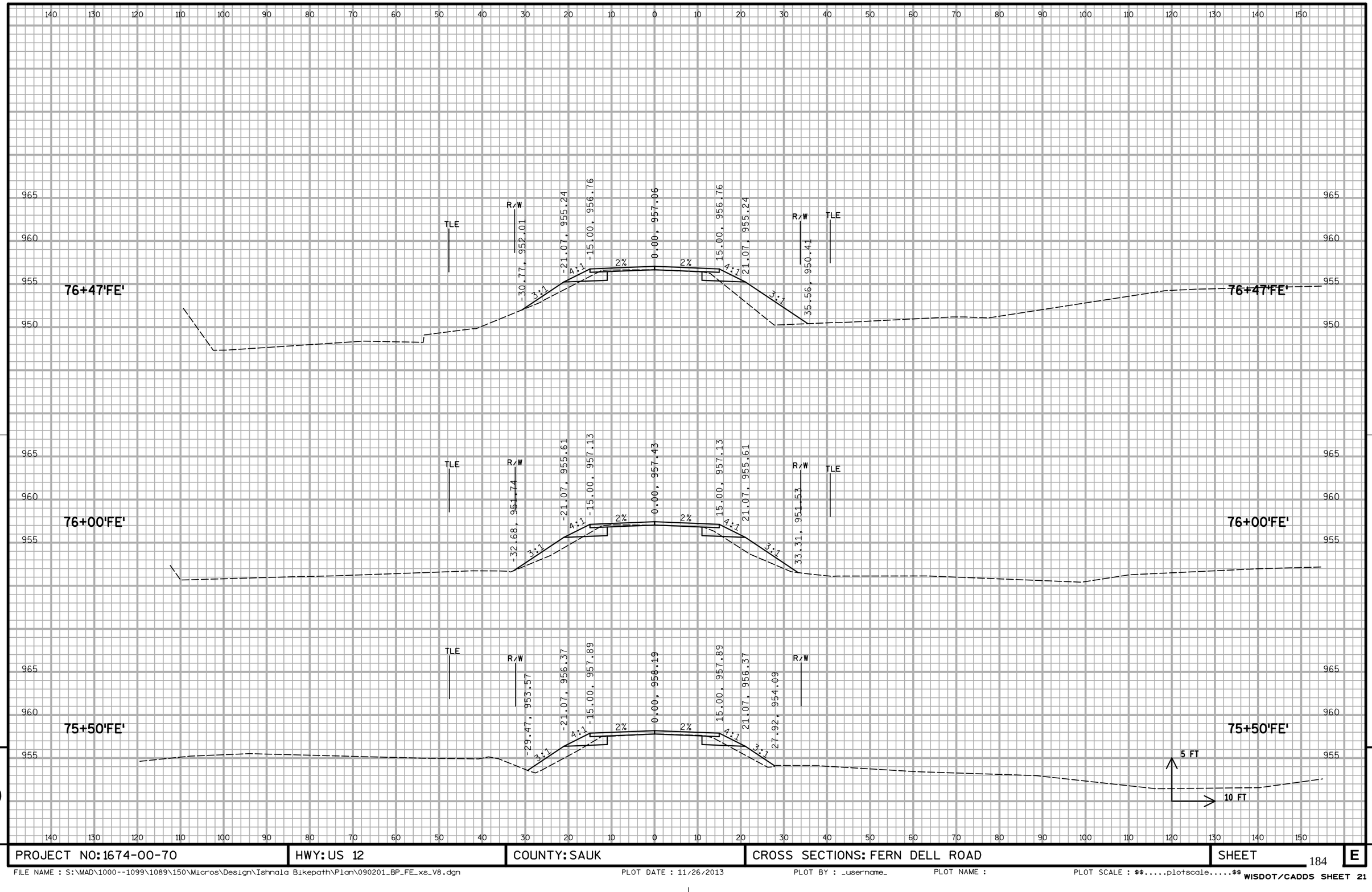

9

9

PROJECT NO: 1674-00-70	HWY: US 12	COUNTY: SAUK	CROSS SECTIONS: FERN DELL ROAD	SHEET	E

FILE NAME : S:\MAD\1000--1099\1089\150\Micros\Design\Ishnala Bikepath\Plan\090201_BP_FE_xs_V8.dgn PLOT DATE : 11/26/2013 PLOT BY : _username_ PLOT NAME : PLOT SCALE : $$.....plotscale.....$$ WISDOT/CADDS SHEET 21

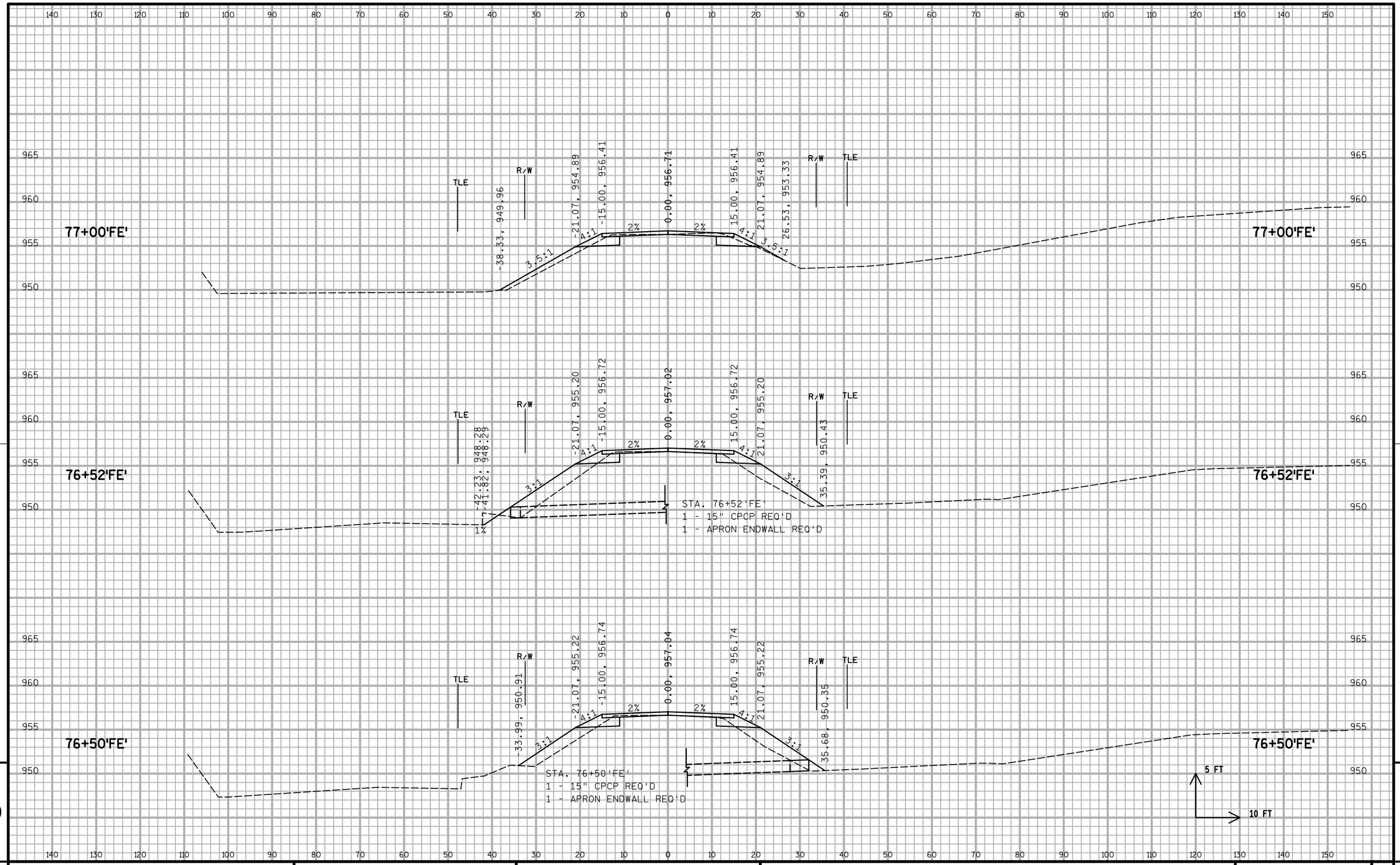

9

9

PROJECT NO: 1674-00-70	HWY: US 12	COUNTY: SAUK	CROSS SECTIONS: FERN DELL ROAD	SHEET	E

FILE NAME : S:\MAD\1000--1099\1089\150\Micros\Design\Ishnala Bikepath\Plan\090201_BP_FE_xs_V8.dgn PLOT DATE : 11/26/2013 PLOT BY : _username_ PLOT NAME : PLOT SCALE : $$.....plotscale.....$$ WISDOT/CADDS SHEET 21

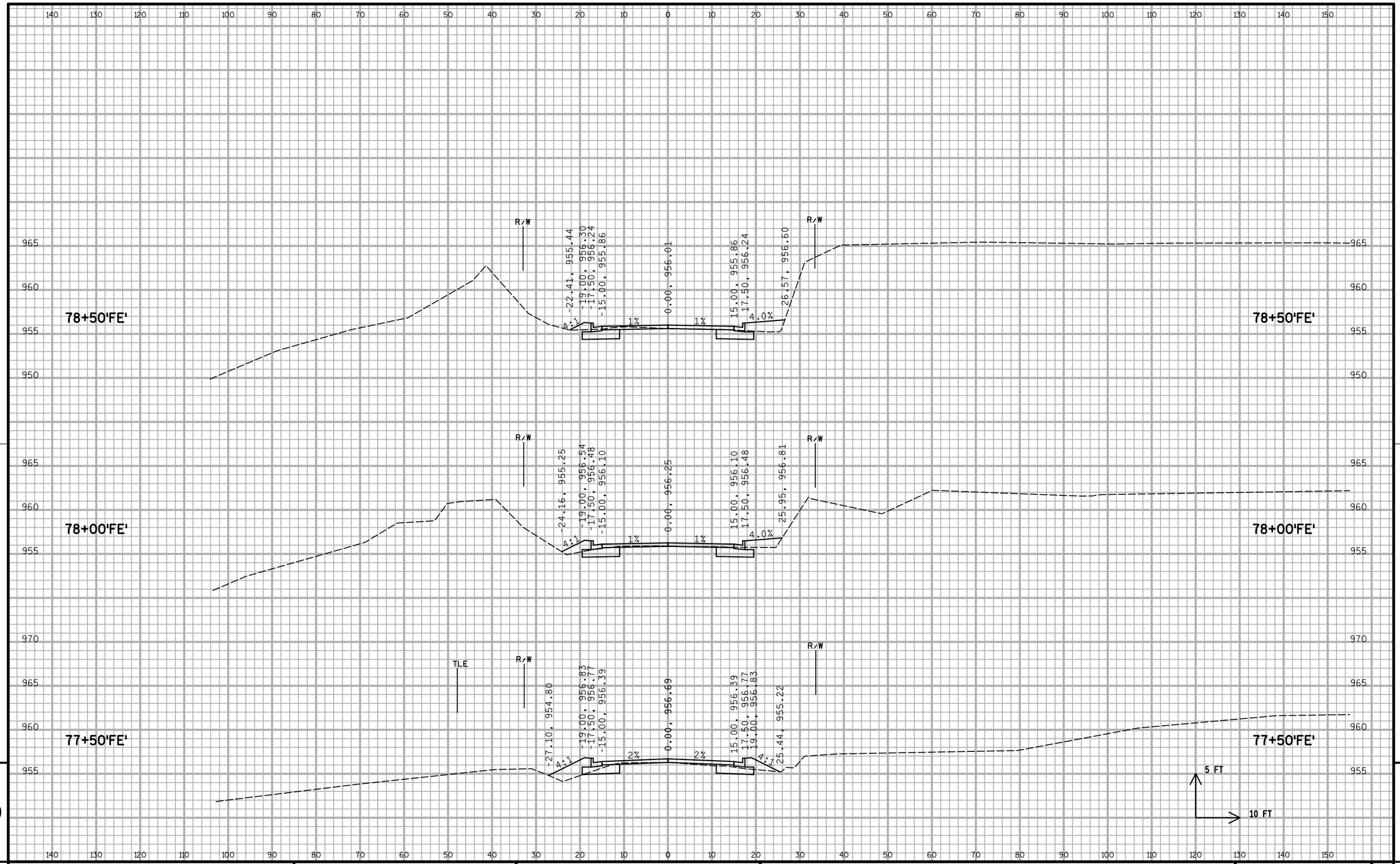

9

9

PROJECT NO: 1674-00-70	HWY: US 12	COUNTY: SAUK	CROSS SECTIONS: FERN DELL ROAD	SHEET 186	E

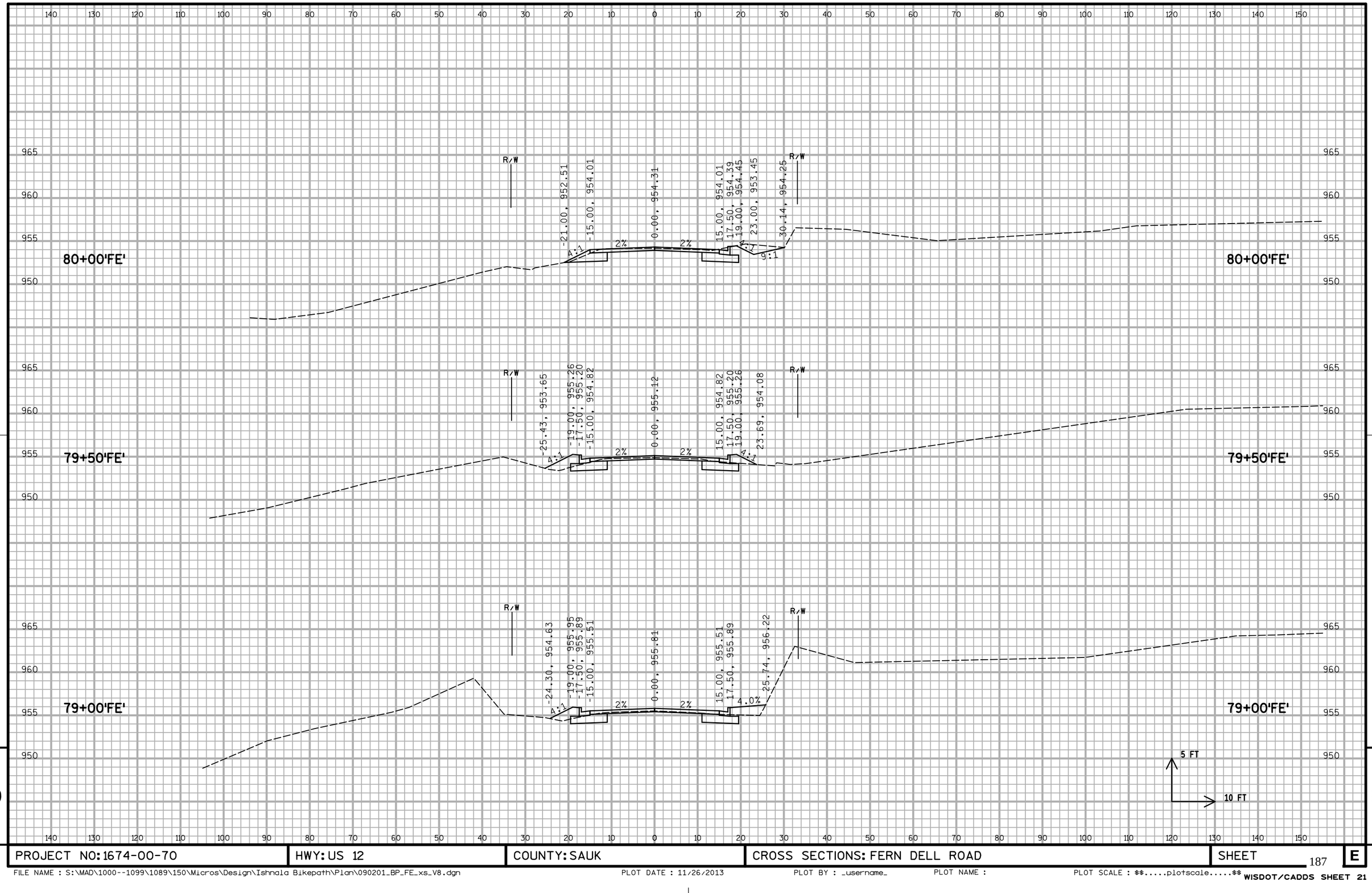

9

9

PROJECT NO: 1674-00-70	HWY: US 12	COUNTY: SAUK	CROSS SECTIONS: FERN DELL ROAD	SHEET	E

FILE NAME : S:\MAD\1000--1099\1089\150\Micros\Design\Ishnala Bikepath\Plan\090201_BP_FE_xs_V8.dgn PLOT DATE : 11/26/2013 PLOT BY : _username_ PLOT NAME : PLOT SCALE : $$.....plotscale.....$$ WISDOT/CADDS SHEET 21

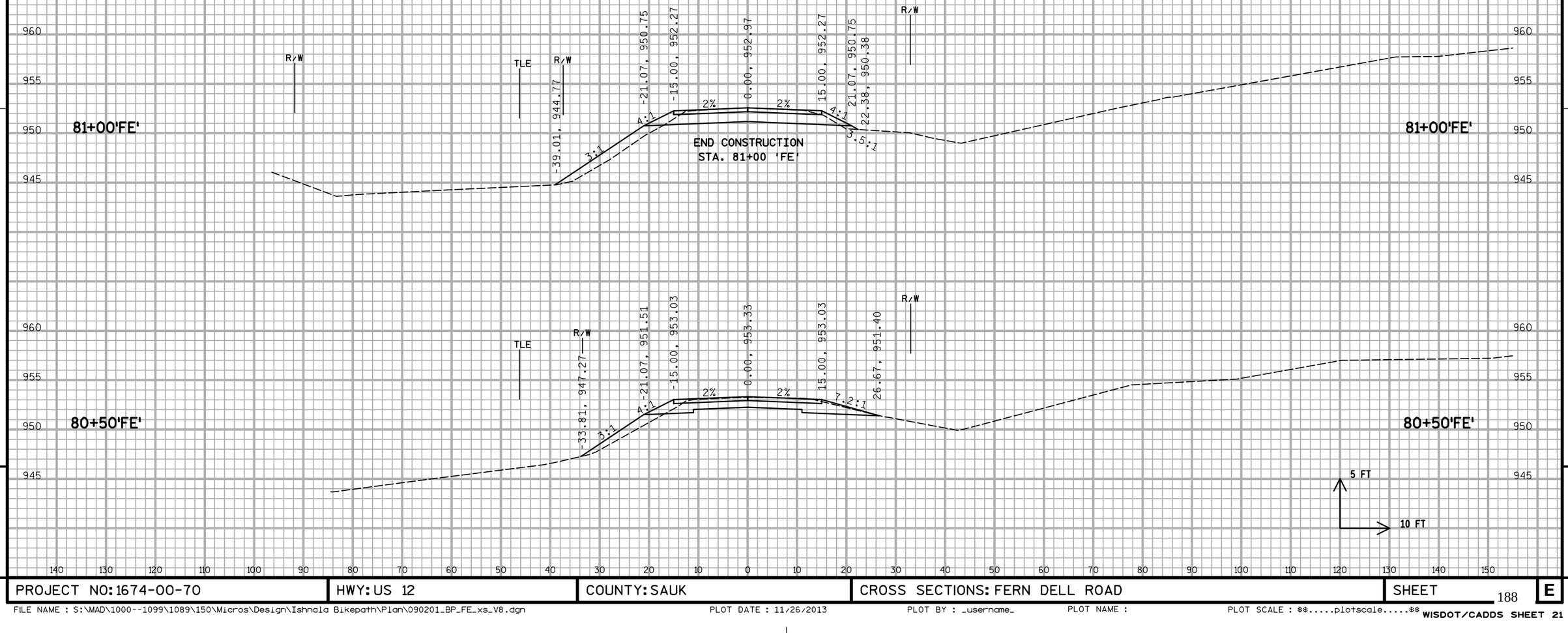

9

9

PROJECT NO: 1674-00-70	HWY: US 12	COUNTY: SAUK	CROSS SECTIONS: FERN DELL ROAD	SHEET	E

FILE NAME : S:\MAD\1000--1099\1089\150\Micros\Design\Ishnala Bikepath\Plan\090201_BP_FE_xs_V8.dgn PLOT DATE : 11/26/2013 PLOT BY : _username_ PLOT NAME : PLOT SCALE : $$.....plotscale.....$$ WISDOT/CADDS SHEET 21

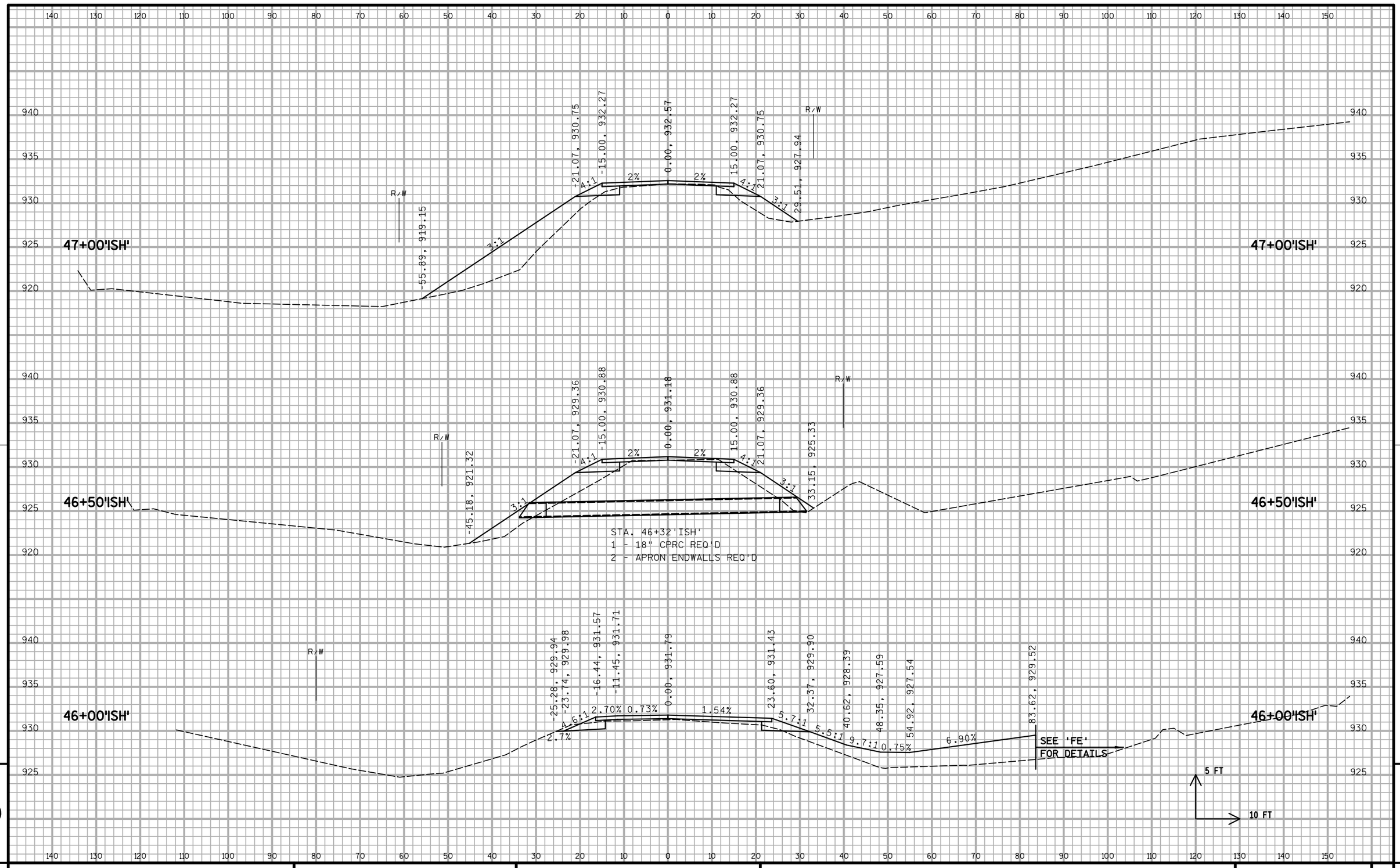

9

9

PROJECT NO: 1674-00-70	HWY: US 12	COUNTY: SAUK	CROSS SECTIONS: ISHNALA ROAD	SHEET 189	E

FILE NAME : S:\MAD\1000--1099\1089\150\Micros\Design\Ishnala Bikepath\Plan\090202_BP_ISH_xs_V8.dgn PLOT DATE : 11/26/2013 PLOT BY : _username_ PLOT NAME : PLOT SCALE : $$.....plotscale.....$$

WISDOT/CADDS SHEET 21

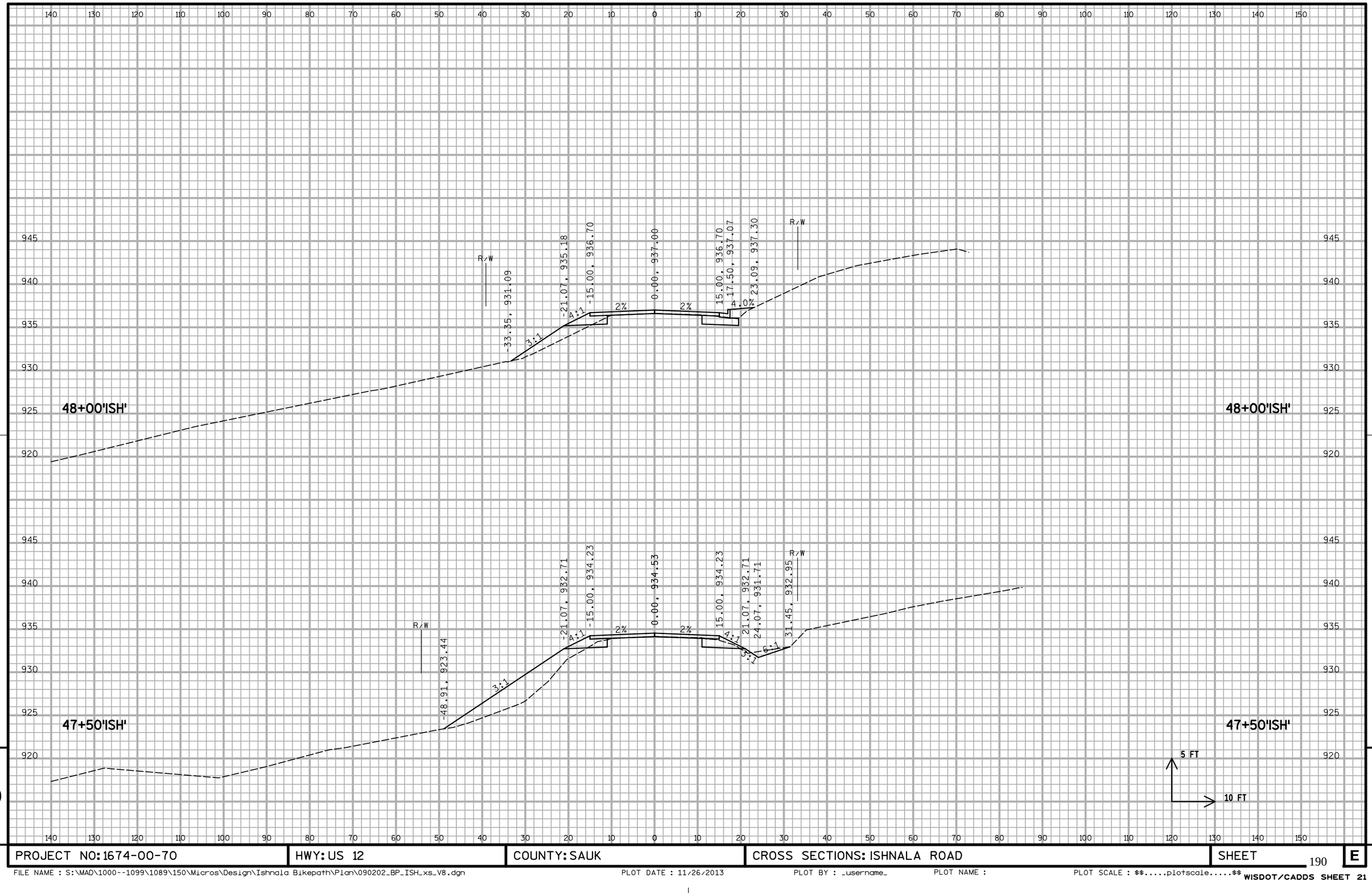

9

9

PROJECT NO: 1674-00-70	HWY: US 12	COUNTY: SAUK	CROSS SECTIONS: ISHNALA ROAD	SHEET 190	E

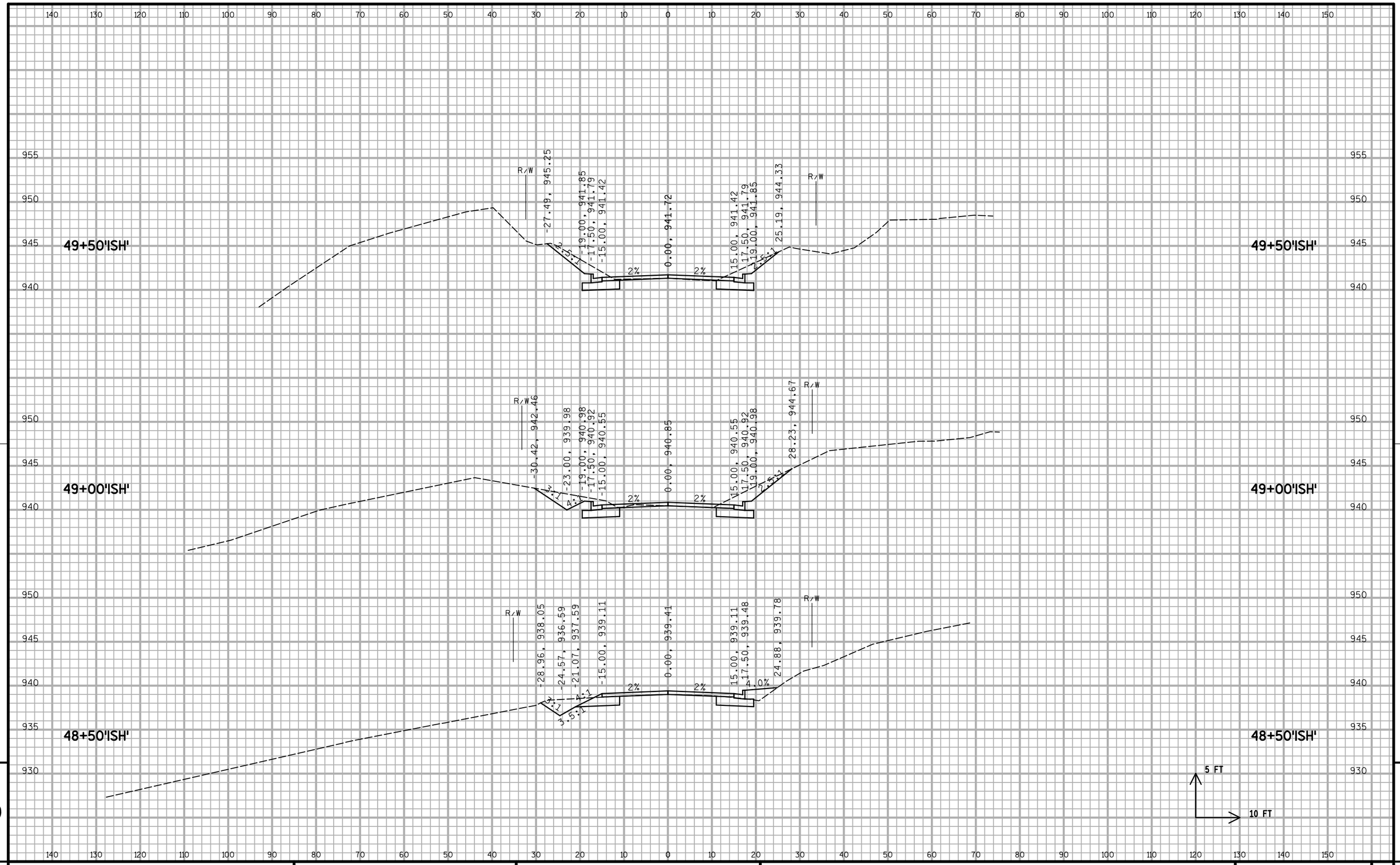

PROJECT NO: 1674-00-70	HWY: US 12	COUNTY: SAUK	CROSS SECTIONS: ISHNALA ROAD	SHEET	E

FILE NAME : S:\MAD\1000--1099\1089\150\Micros\Design\Ishnala Bikepath\Plan\090202_BP_ISH_xs_V8.dgn PLOT DATE : 11/26/2013 PLOT BY : _username_ PLOT NAME : PLOT SCALE : $$.....plotscale.....$$ WISDOT/CADDS SHEET 21

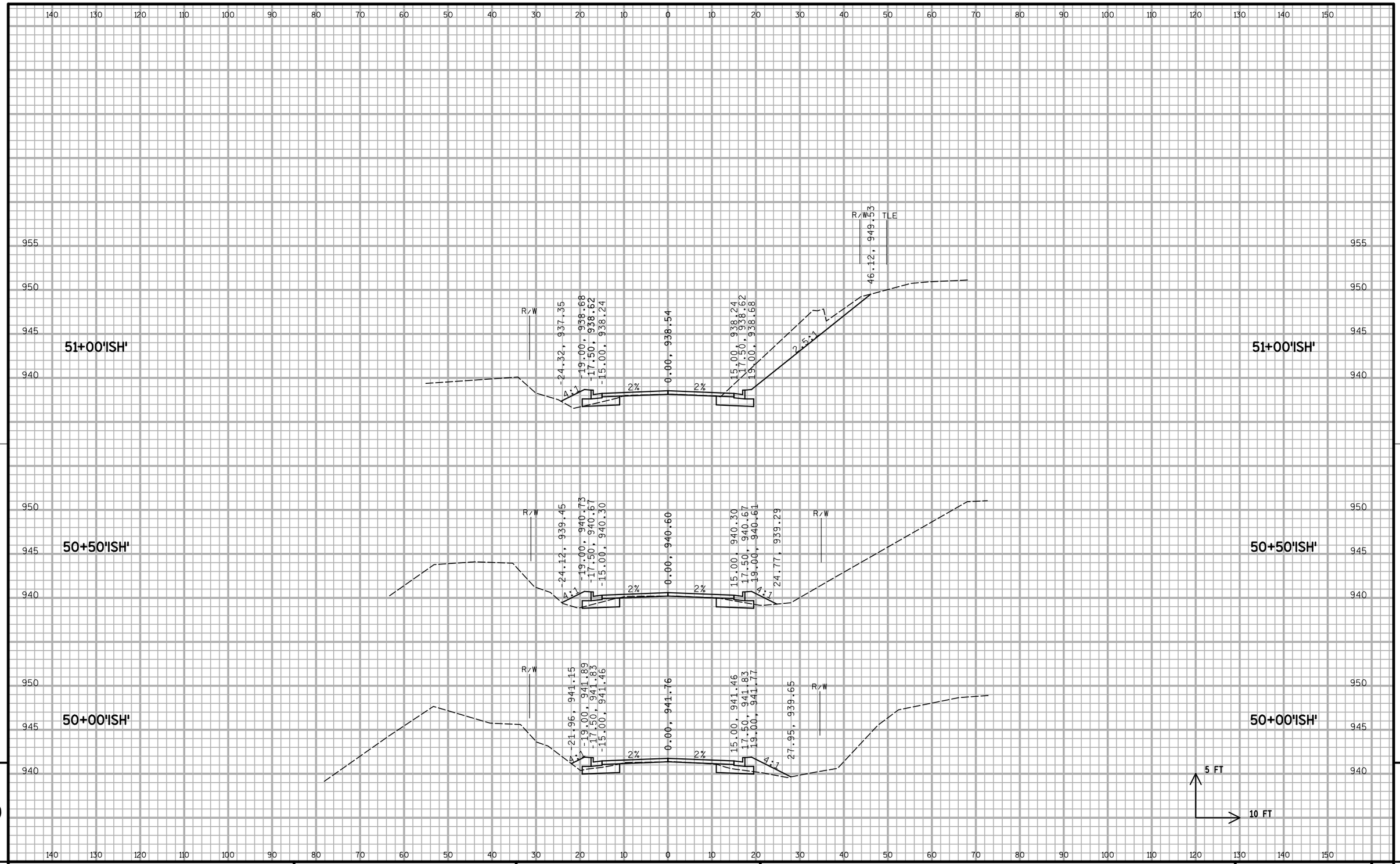

9

9

PROJECT NO: 1674-00-70	HWY: US 12	COUNTY: SAUK	CROSS SECTIONS: ISHNALA ROAD	SHEET	E

FILE NAME : S:\MAD\1000--1099\1089\150\Micros\Design\Ishnala Bikepath\Plan\090202_BP_ISH_xs_V8.dgn PLOT DATE : 11/26/2013 PLOT BY : _username_ PLOT NAME : PLOT SCALE : $$.....plotscale.....$$ WISDOT/CADDS SHEET 21

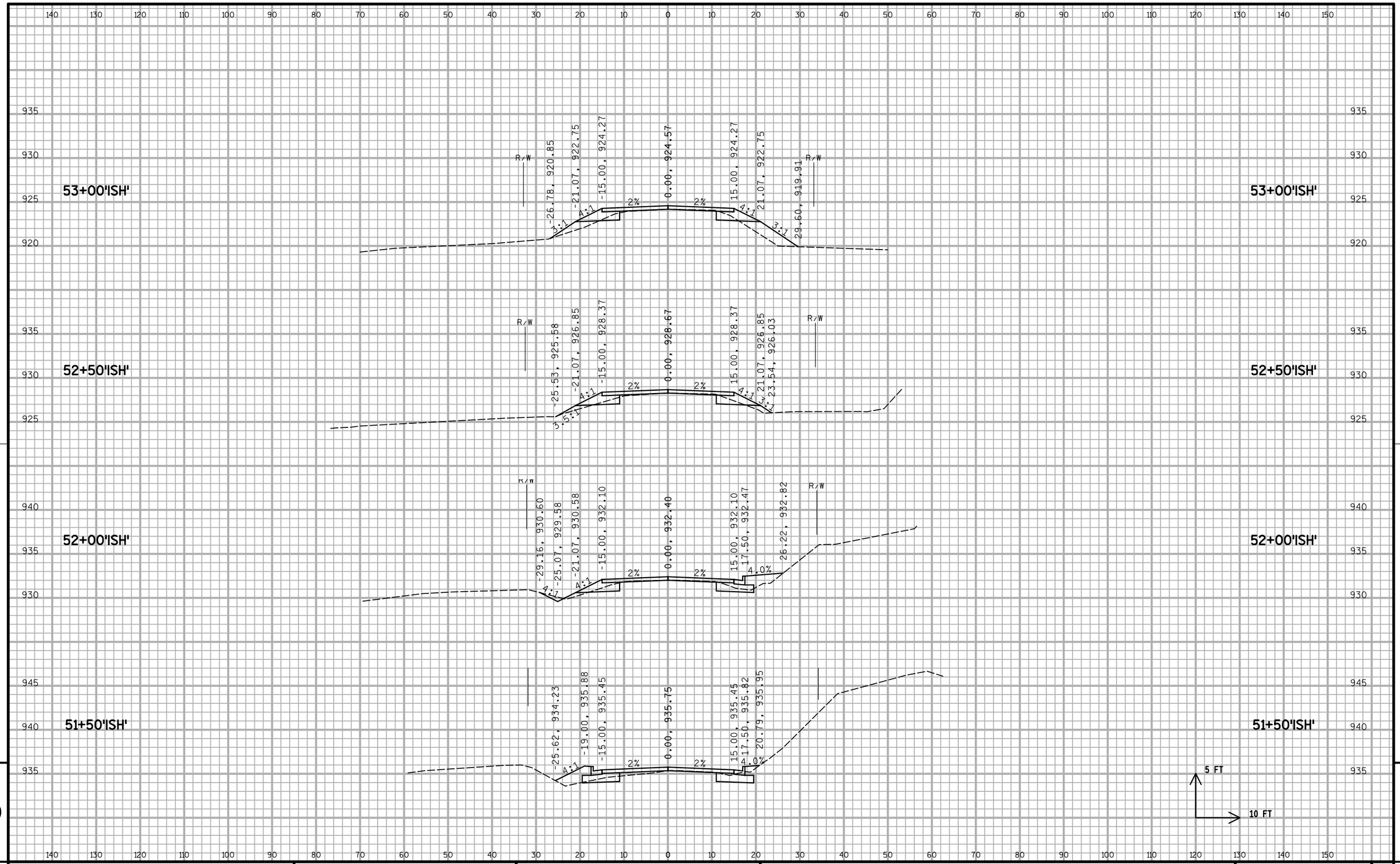

9

9

PROJECT NO: 1674-00-70	HWY: US 12	COUNTY: SAUK	CROSS SECTIONS: ISHNALA ROAD	SHEET	E

FILE NAME : S:\MAD\1000--1099\1089\150\Micros\Design\Ishnala Bikepath\Plan\090202_BP_ISH_xs_V8.dgn PLOT DATE : 11/26/2013 PLOT BY : _username_ PLOT NAME : PLOT SCALE : $$.....plotscale.....$$ WISDOT/CADDS SHEET 21

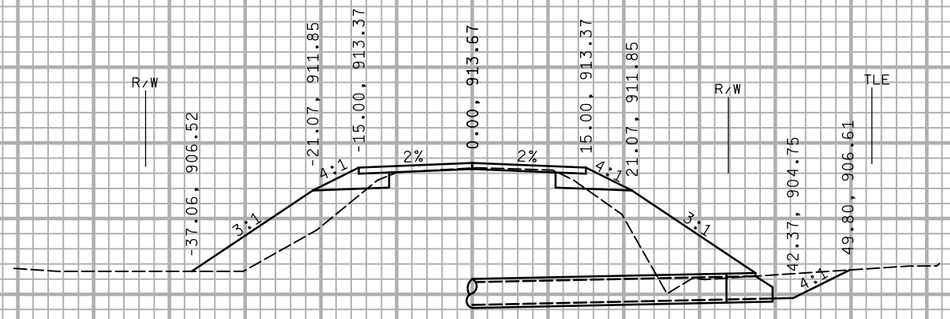

54+50'ISH'

STA. 54+51'ISH'
1 - 18" CPRC REQ'D
1 - APRON ENDWALL REQ'D

54+50'ISH'

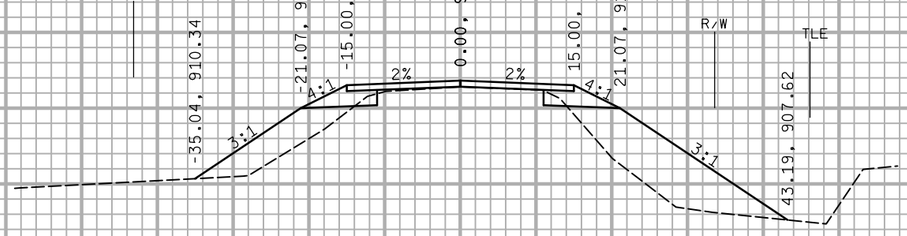

54+00'ISH'

54+00'ISH'

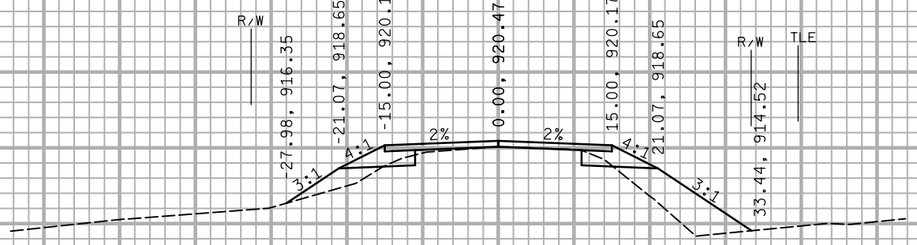

53+50'ISH'

53+50'ISH'

5 FT

10 FT

9

9

PROJECT NO: 1674-00-70	HWY: US 12	COUNTY: SAUK	CROSS SECTIONS: ISHNALA ROAD	SHEET 194	E

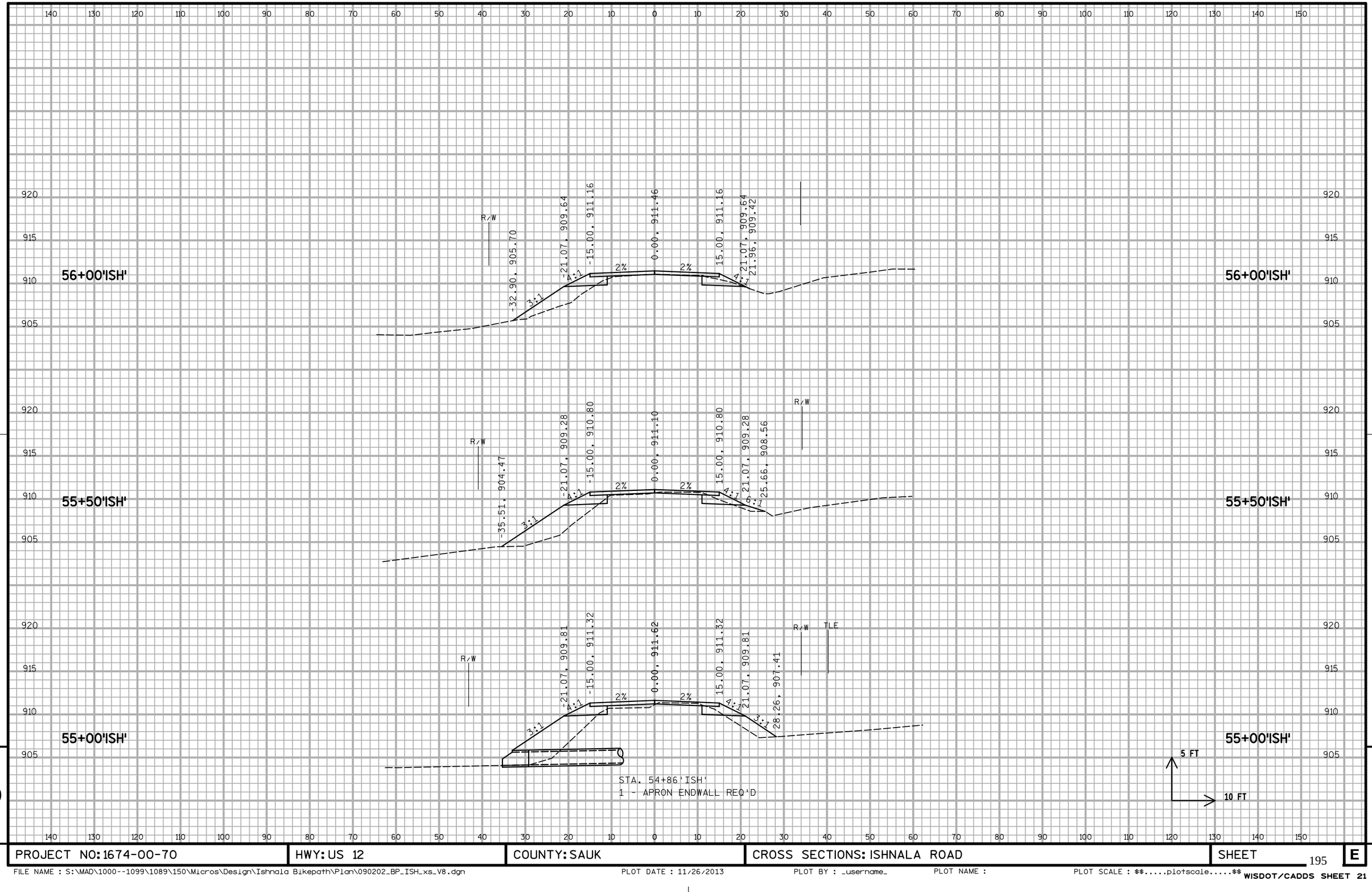

9

9

PROJECT NO: 1674-00-70	HWY: US 12	COUNTY: SAUK	CROSS SECTIONS: ISHNALA ROAD	SHEET	E

FILE NAME : S:\MAD\1000--1099\1089\150\Micros\Design\Ishnala Bikepath\Plan\090202_BP_ISH_xs_V8.dgn PLOT DATE : 11/26/2013 PLOT BY : _username_ PLOT NAME : PLOT SCALE : $$.....plotscale.....$$ WISDOT/CADDS SHEET 21

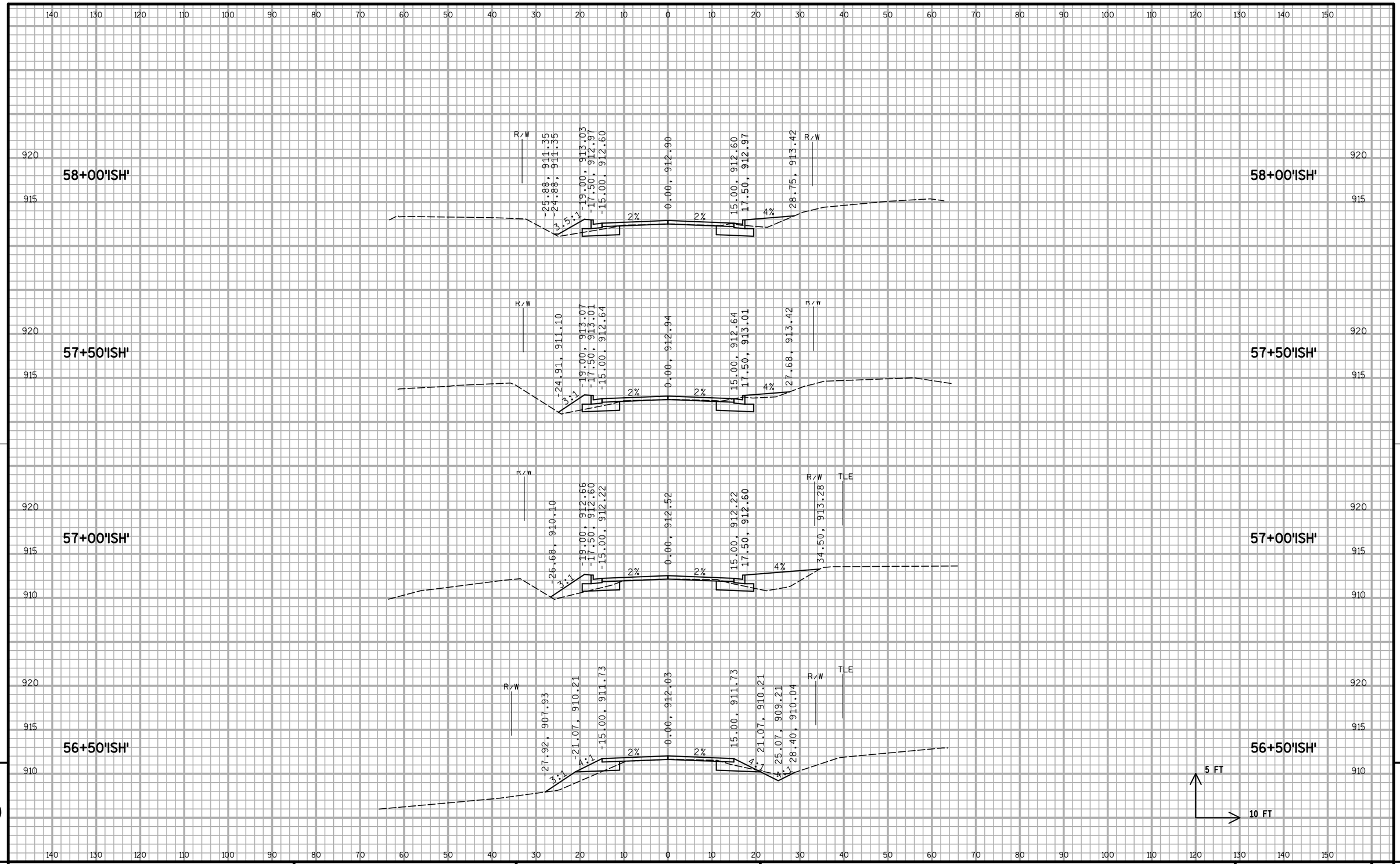

9

9

PROJECT NO: 1674-00-70	HWY: US 12	COUNTY: SAUK	CROSS SECTIONS: ISHNALA ROAD	SHEET	E

FILE NAME : S:\MAD\1000--1099\1089\150\Micros\Design\Ishnala Bikepath\Plan\090202_BP_ISH_xs_V8.dgn PLOT DATE : 11/26/2013 PLOT BY : _username_ PLOT NAME : PLOT SCALE : $$.....plotscale.....$$ WISDOT/CADDS SHEET 21

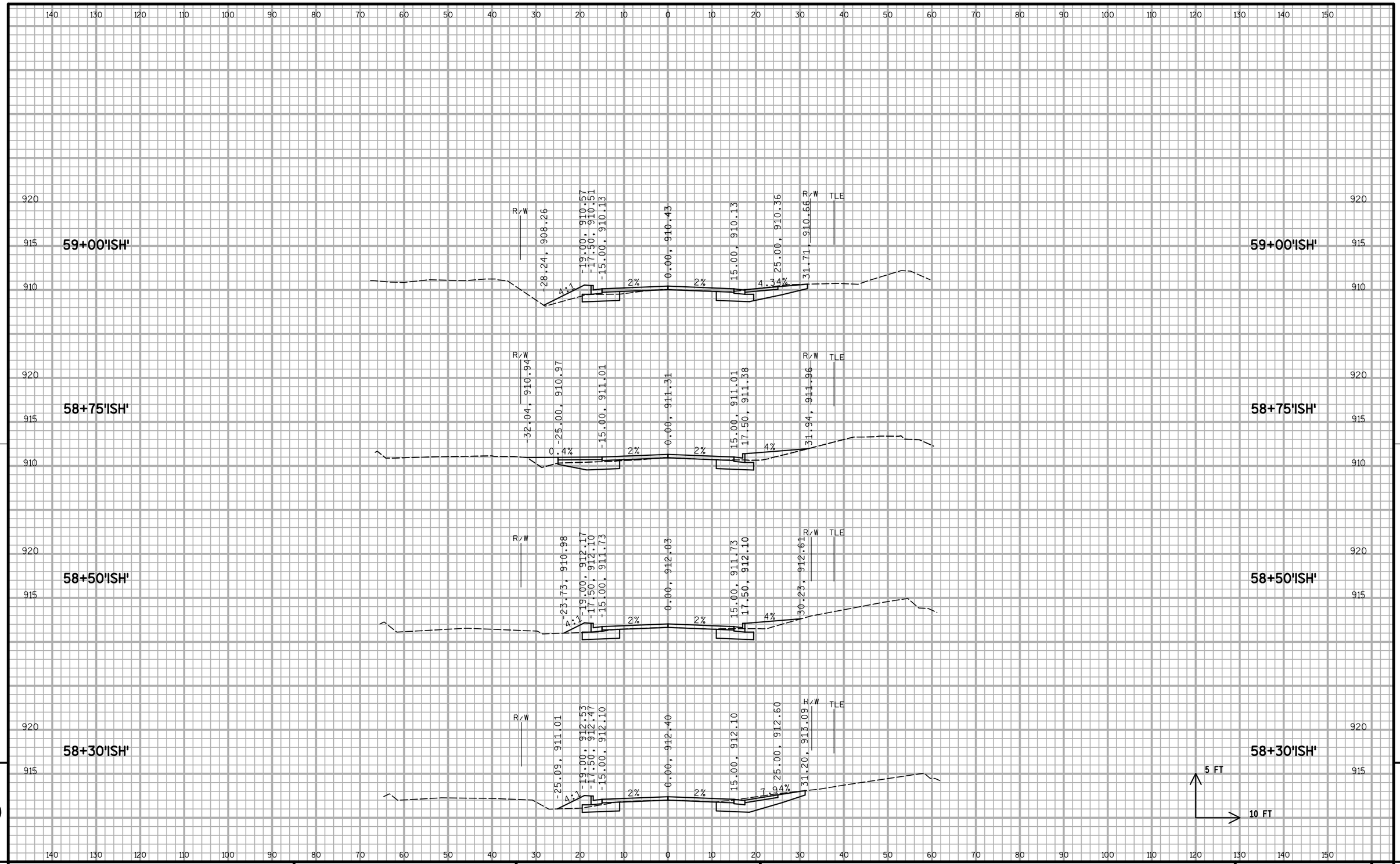

PROJECT NO:1674-00-70	HWY:US 12	COUNTY:SAUK	CROSS SECTIONS:ISHNALA ROAD	SHEET 197	E

FILE NAME : S:\MAD\1000--1099\1089\150\Micros\Design\Ishnala Bikepath\Plan\090202_BP_ISH_xs_V8.dgn PLOT DATE : 11/26/2013 PLOT BY : _username_ PLOT NAME : PLOT SCALE : $$.....plotscale.....$$ WISDOT/CADDS SHEET 21

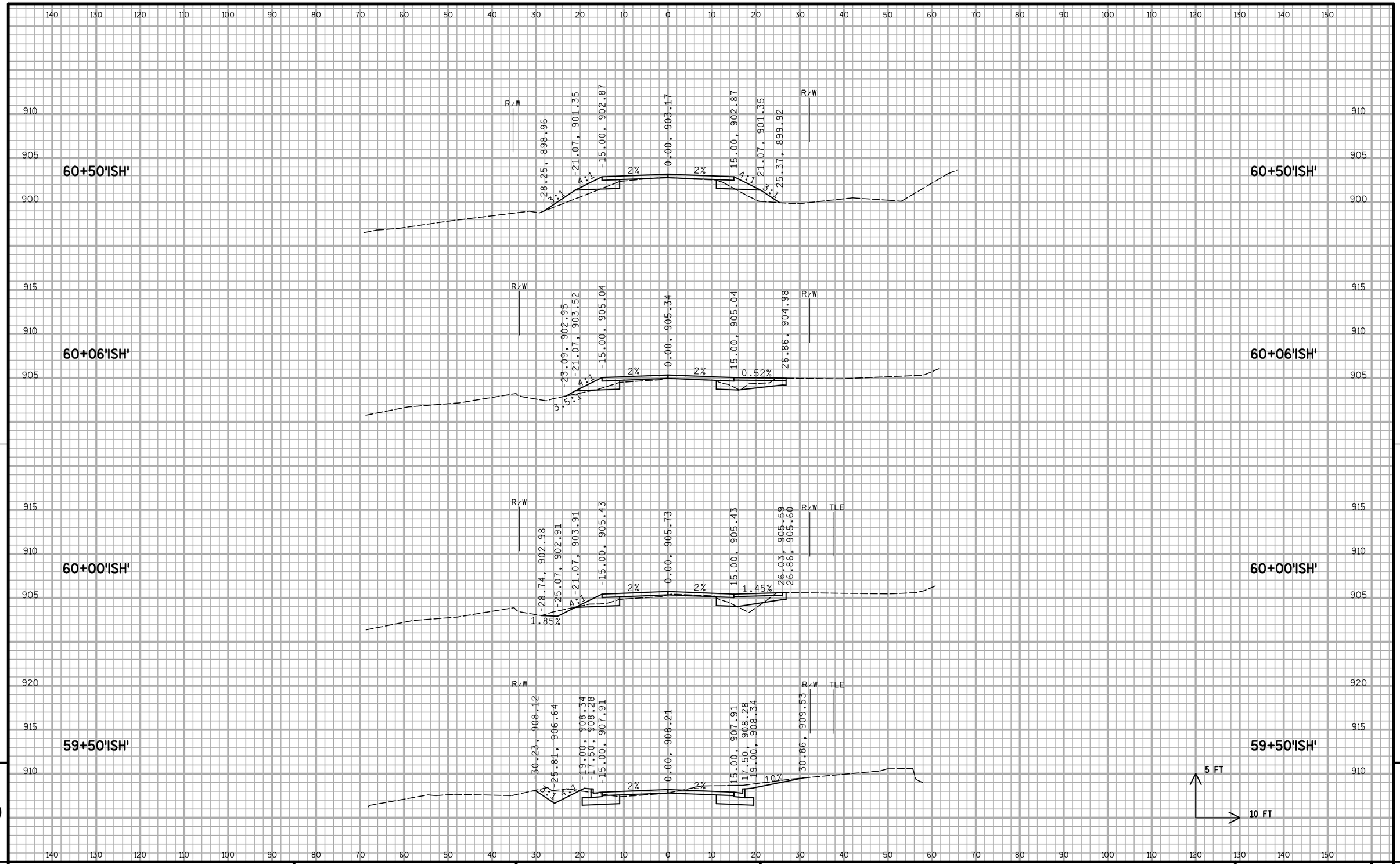

PROJECT NO: 1674-00-70	HWY: US 12	COUNTY: SAUK	CROSS SECTIONS: ISHNALA ROAD	SHEET 198	E

FILE NAME : S:\MAD\1000--1099\1089\150\Micros\Design\Ishnala Bikepath\Plan\090202_BP_ISH_xs_V8.dgn PLOT DATE : 11/26/2013 PLOT BY : _username_ PLOT NAME : PLOT SCALE : $$.....plotscale.....$$ WISDOT/CADDS SHEET 21

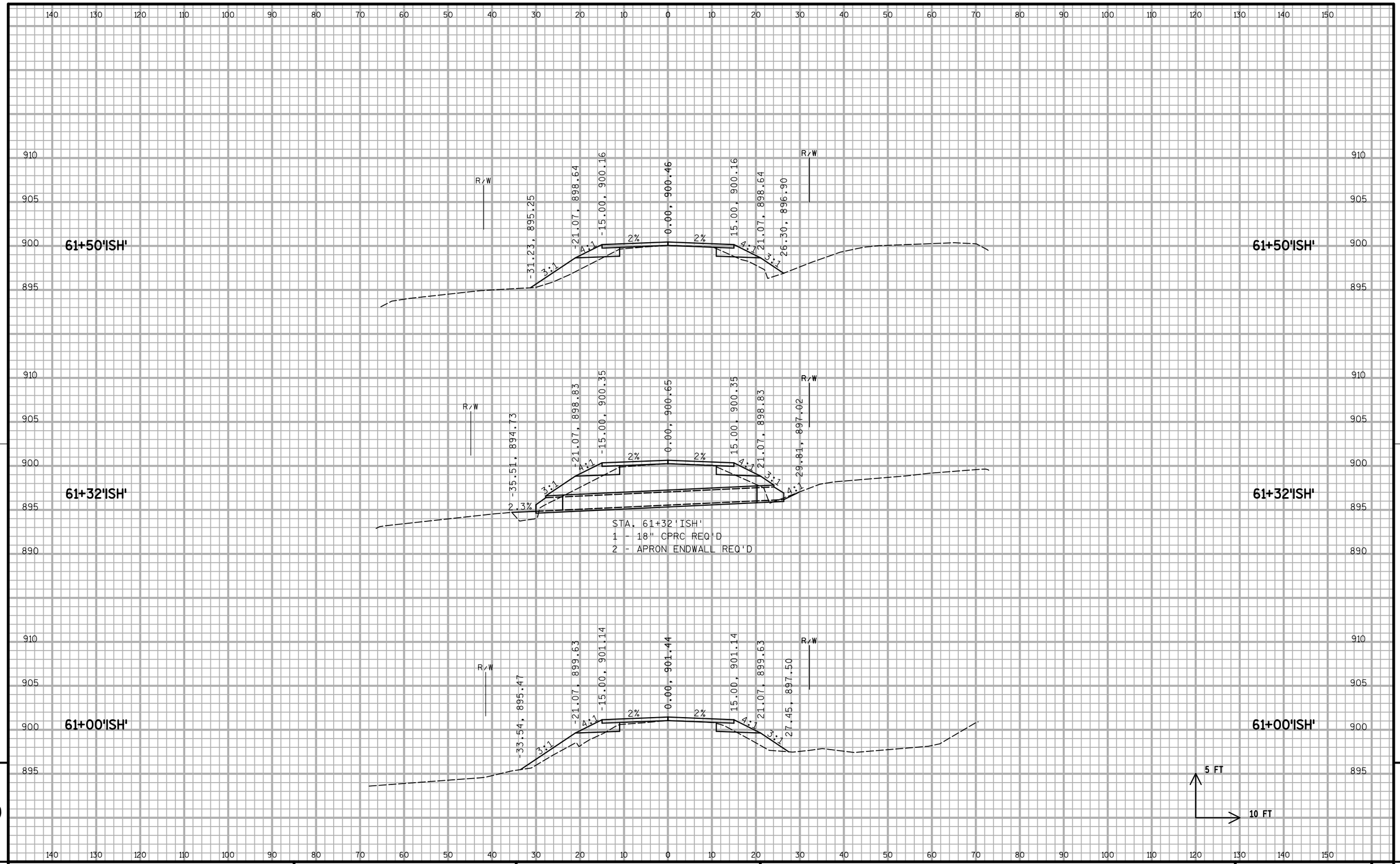

PROJECT NO: 1674-00-70	HWY: US 12	COUNTY: SAUK	CROSS SECTIONS: ISHNALA ROAD	SHEET 199	E

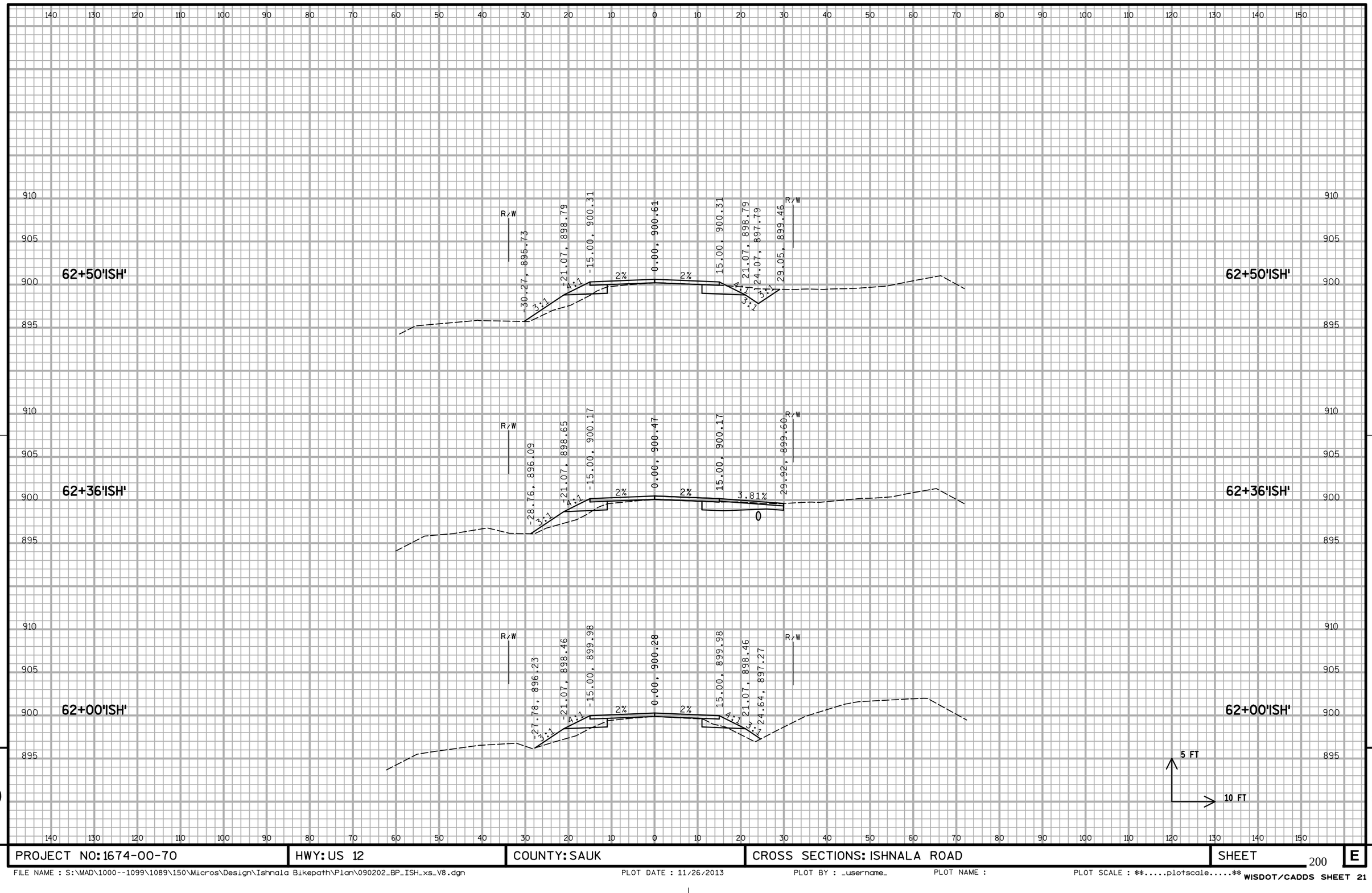

9

9

PROJECT NO: 1674-00-70	HWY: US 12	COUNTY: SAUK	CROSS SECTIONS: ISHNALA ROAD	SHEET 200	E

FILE NAME : S:\MAD\1000--1099\1089\150\Micros\Design\Ishnala Bikepath\Plan\090202_BP_ISH_xs_V8.dgn PLOT DATE : 11/26/2013 PLOT BY : _username_ PLOT NAME : PLOT SCALE : $$.....plotscale.....$$ WISDOT/CADDS SHEET 21

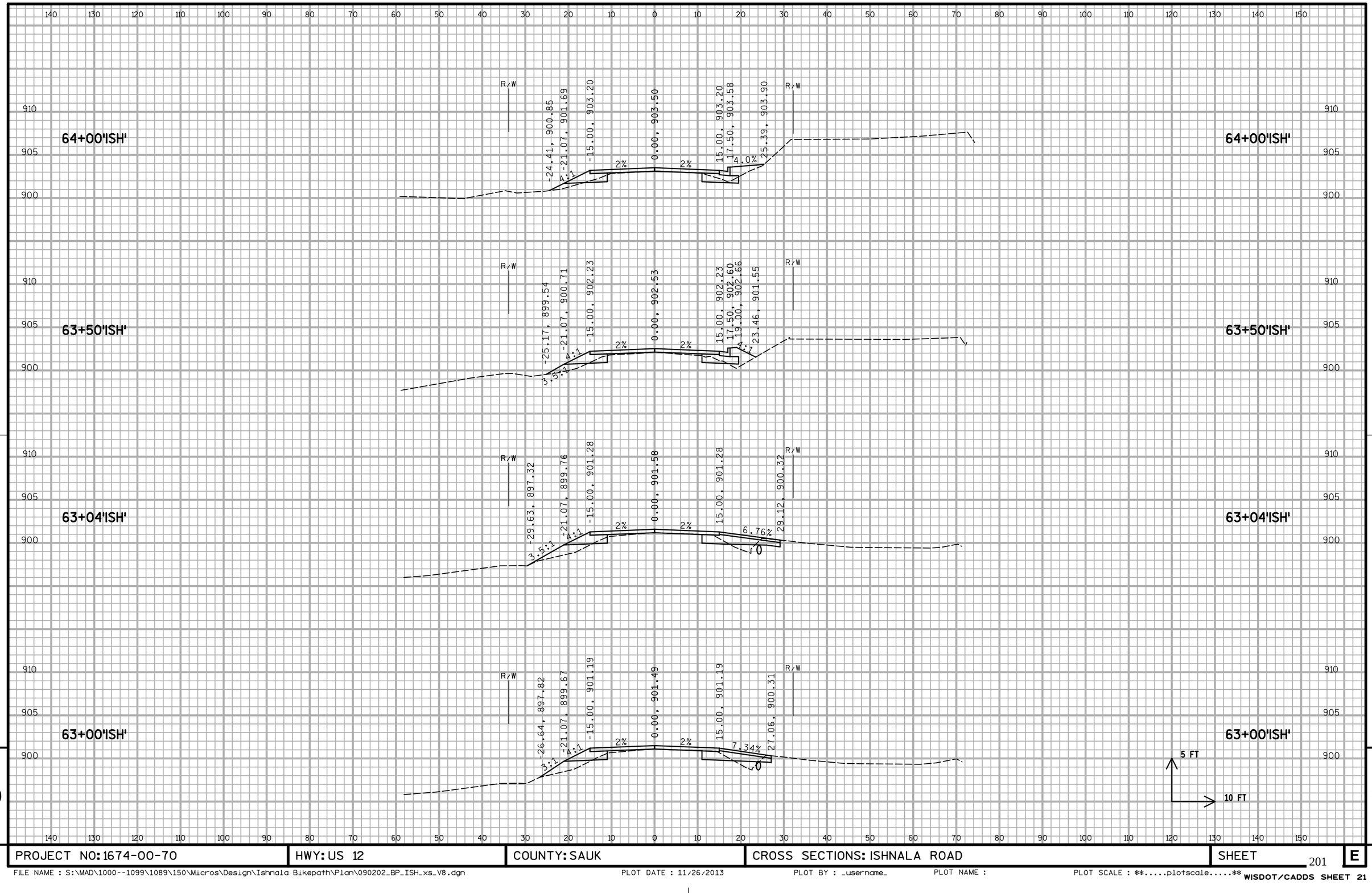

9

9

PROJECT NO: 1674-00-70	HWY: US 12	COUNTY: SAUK	CROSS SECTIONS: ISHNALA ROAD	SHEET 201	E

FILE NAME : S:\MAD\1000--1099\1089\150\Micros\Design\Ishnala Bikepath\Plan\090202_BP_ISH_xs_V8.dgn PLOT DATE : 11/26/2013 PLOT BY : _username_ PLOT NAME : PLOT SCALE : $$.....plotscale.....$$ WISDOT/CADDS SHEET 21

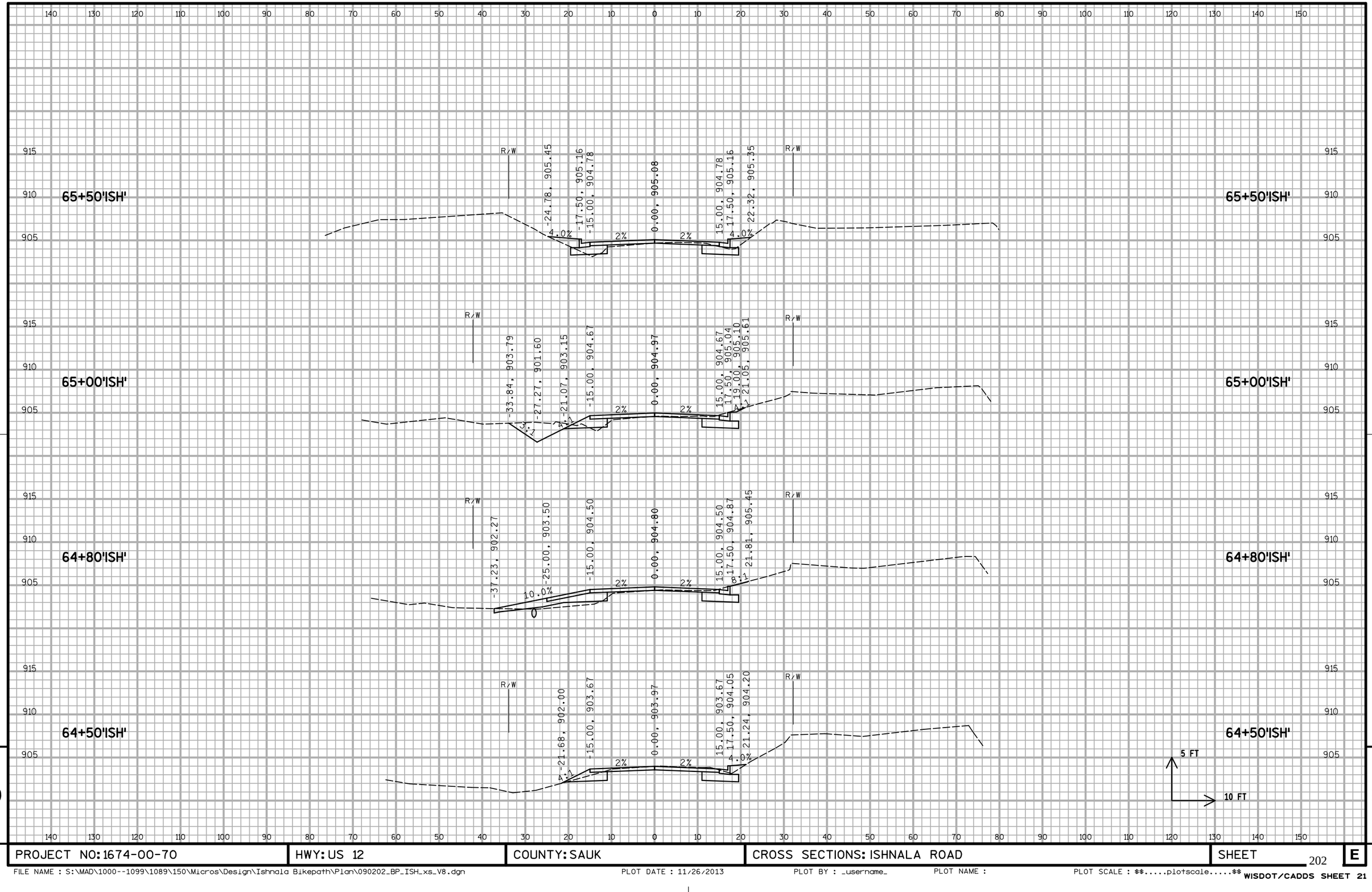

PROJECT NO: 1674-00-70	HWY: US 12	COUNTY: SAUK	CROSS SECTIONS: ISHNALA ROAD	SHEET	E

FILE NAME : S:\MAD\1000--1099\1089\150\Micros\Design\Ishnala Bikepath\Plan\090202_BP_ISH_xs_V8.dgn PLOT DATE : 11/26/2013 PLOT BY : _username_ PLOT NAME : PLOT SCALE : $$.....plotscale.....$$ WISDOT/CADDS SHEET 21

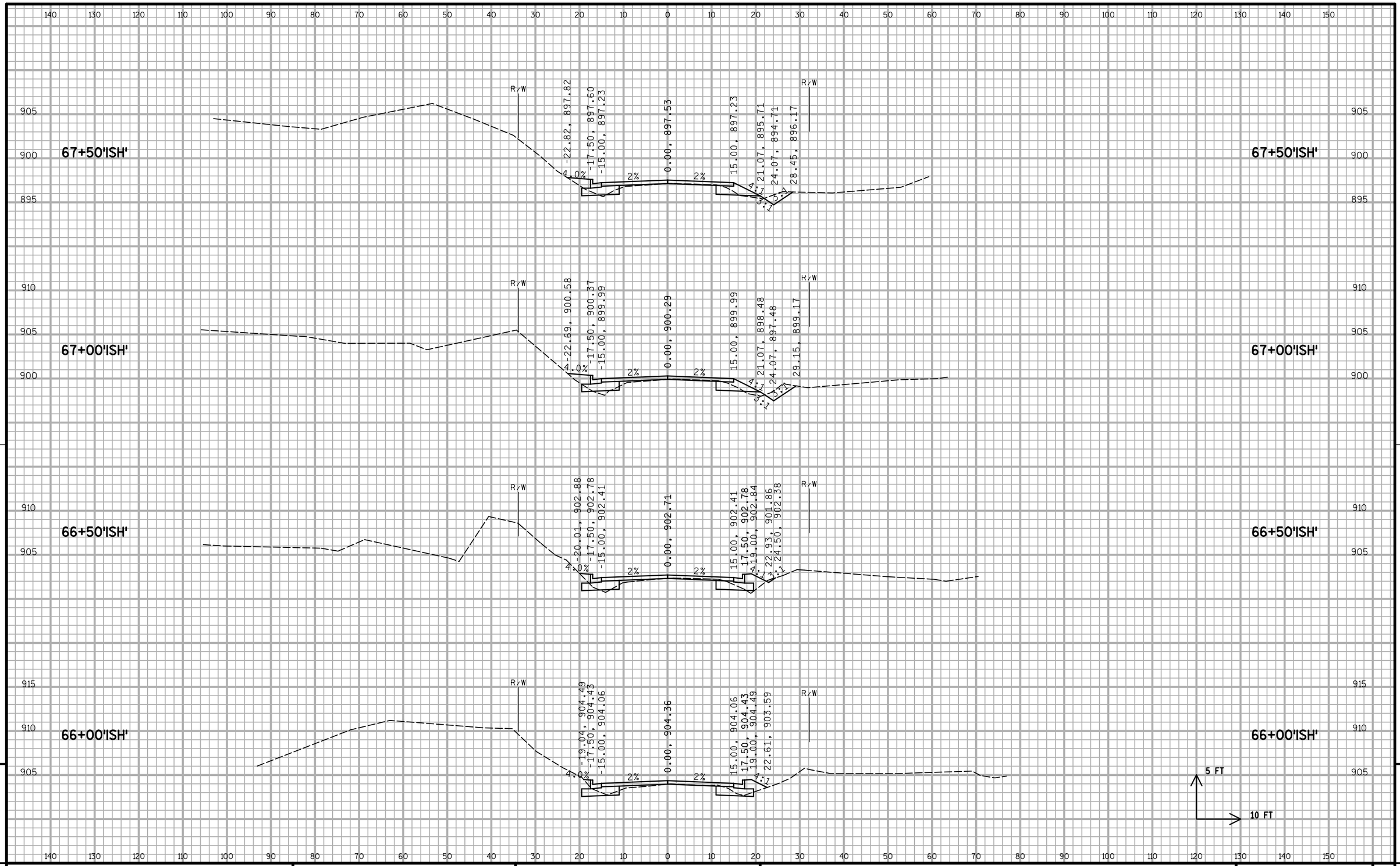

9

9

PROJECT NO: 1674-00-70	HWY: US 12	COUNTY: SAUK	CROSS SECTIONS: ISHNALA ROAD	SHEET	E

FILE NAME : S:\MAD\1000--1099\1089\150\Micros\Design\Ishnala Bikepath\Plan\090202_BP_ISH_xs_V8.dgn PLOT DATE : 11/26/2013 PLOT BY : _username_ PLOT NAME : PLOT SCALE : $$.....plotscale.....$$ WISDOT/CADDS SHEET 21

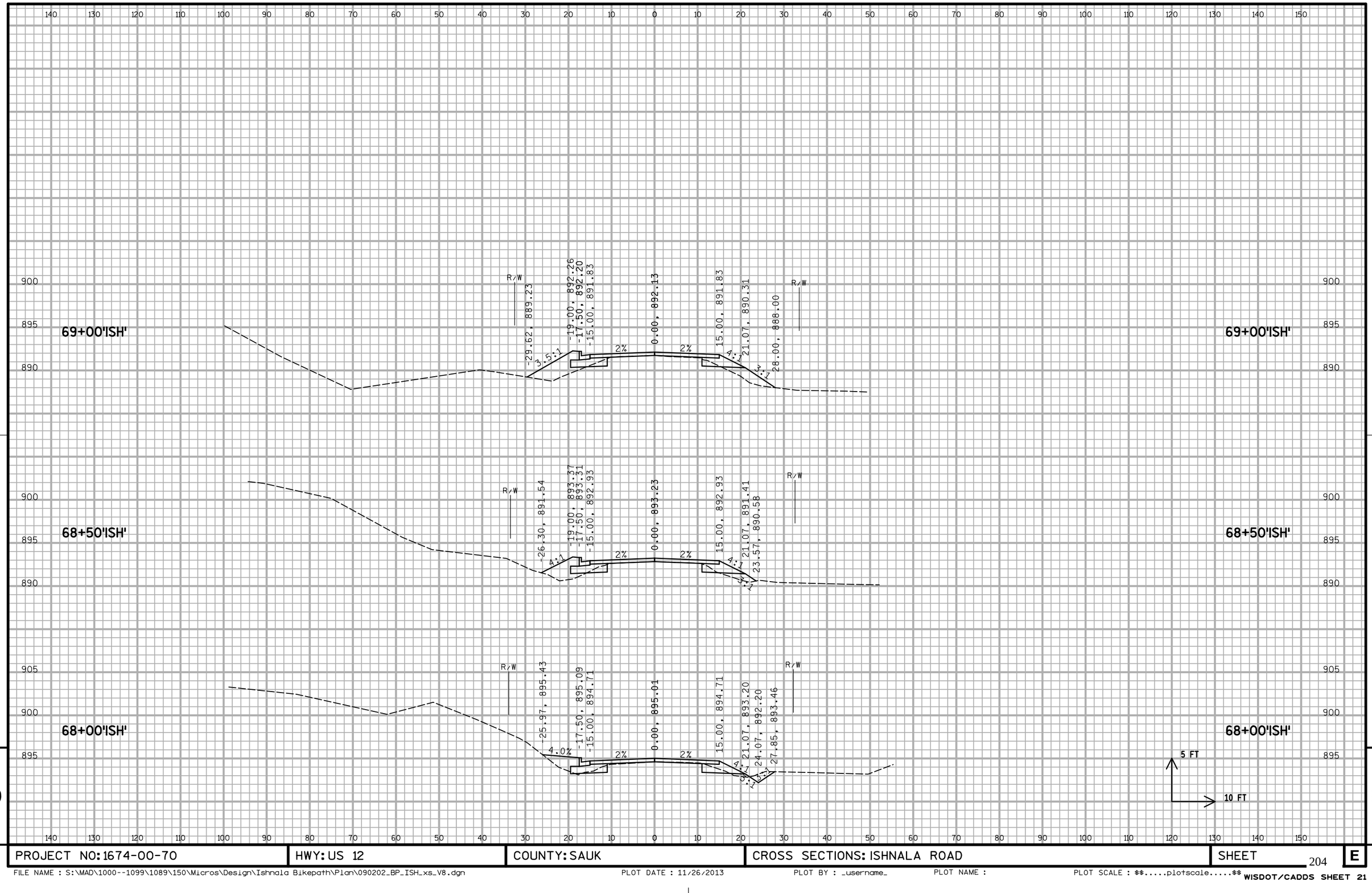

PROJECT NO: 1674-00-70	HWY: US 12	COUNTY: SAUK	CROSS SECTIONS: ISHNALA ROAD	SHEET 204	E

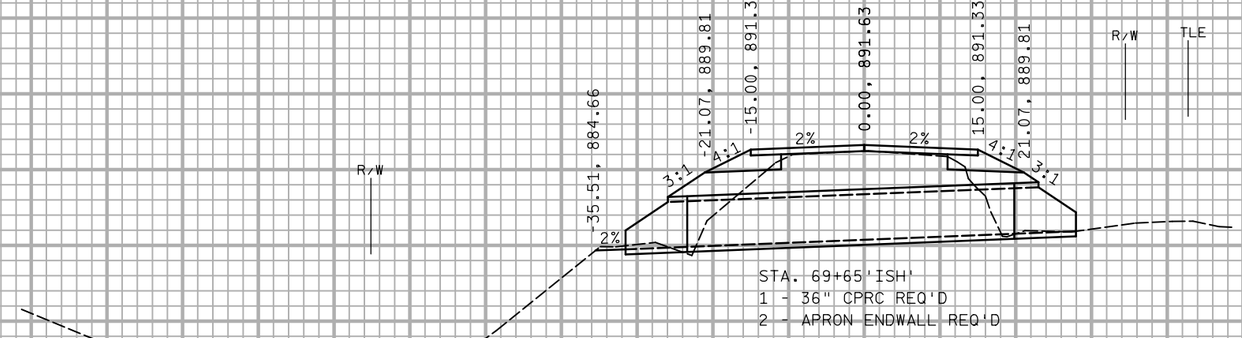

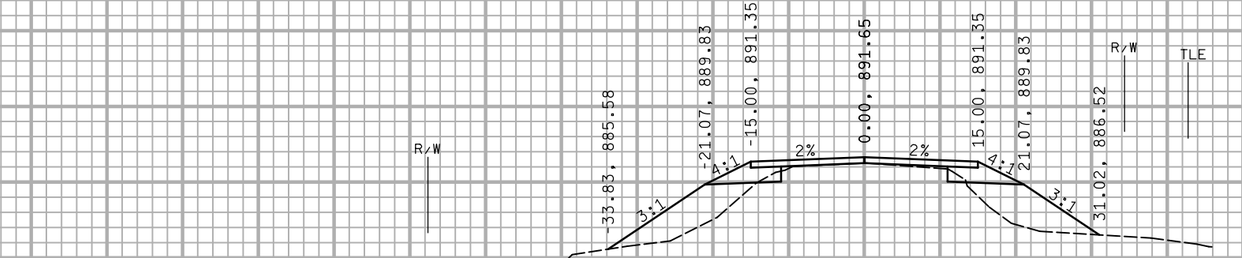

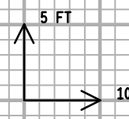

PROJECT NO: 1674-00-70	HWY: US 12	COUNTY: SAUK	CROSS SECTIONS: ISHNALA ROAD	SHEET	E

FILE NAME : S:\MAD\1000--1099\1089\150\Micros\Design\Ishnala Bikepath\Plan\090202_BP_ISH_xs_V8.dgn PLOT DATE : 11/26/2013 PLOT BY : _username_ PLOT NAME : PLOT SCALE : $$.....plotscale.....$$ WISDOT/CADDS SHEET 21

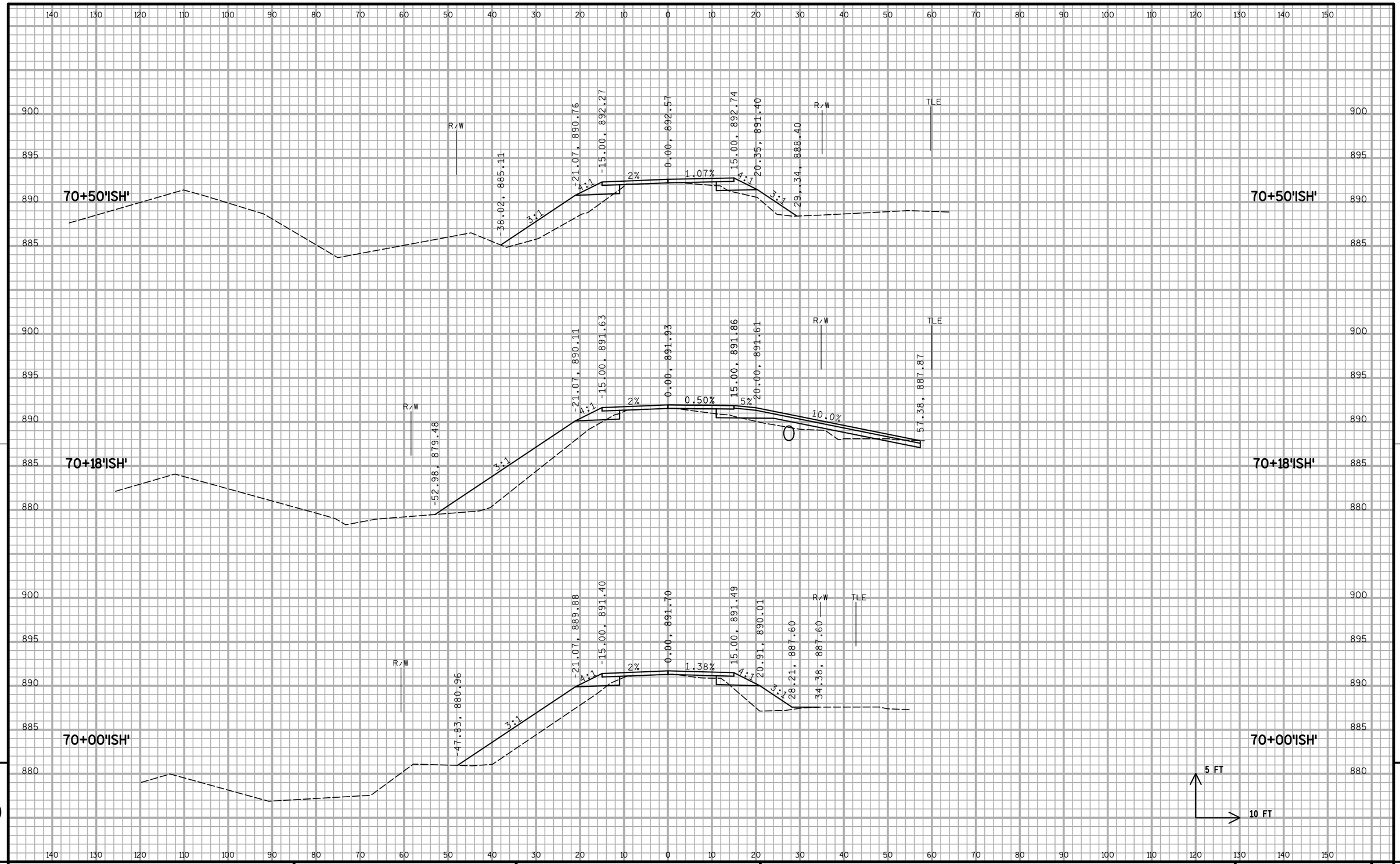

9

9

PROJECT NO: 1674-00-70	HWY: US 12	COUNTY: SAUK	CROSS SECTIONS: ISHNALA ROAD	SHEET	E

FILE NAME : S:\MAD\1000--1099\1089\150\Micros\Design\Ishnala Bikepath\Plan\090202_BP_ISH_xs_V8.dgn PLOT DATE : 11/26/2013 PLOT BY : _username_ PLOT NAME : PLOT SCALE : $$.....plotscale.....$$ WISDOT/CADDS SHEET 21

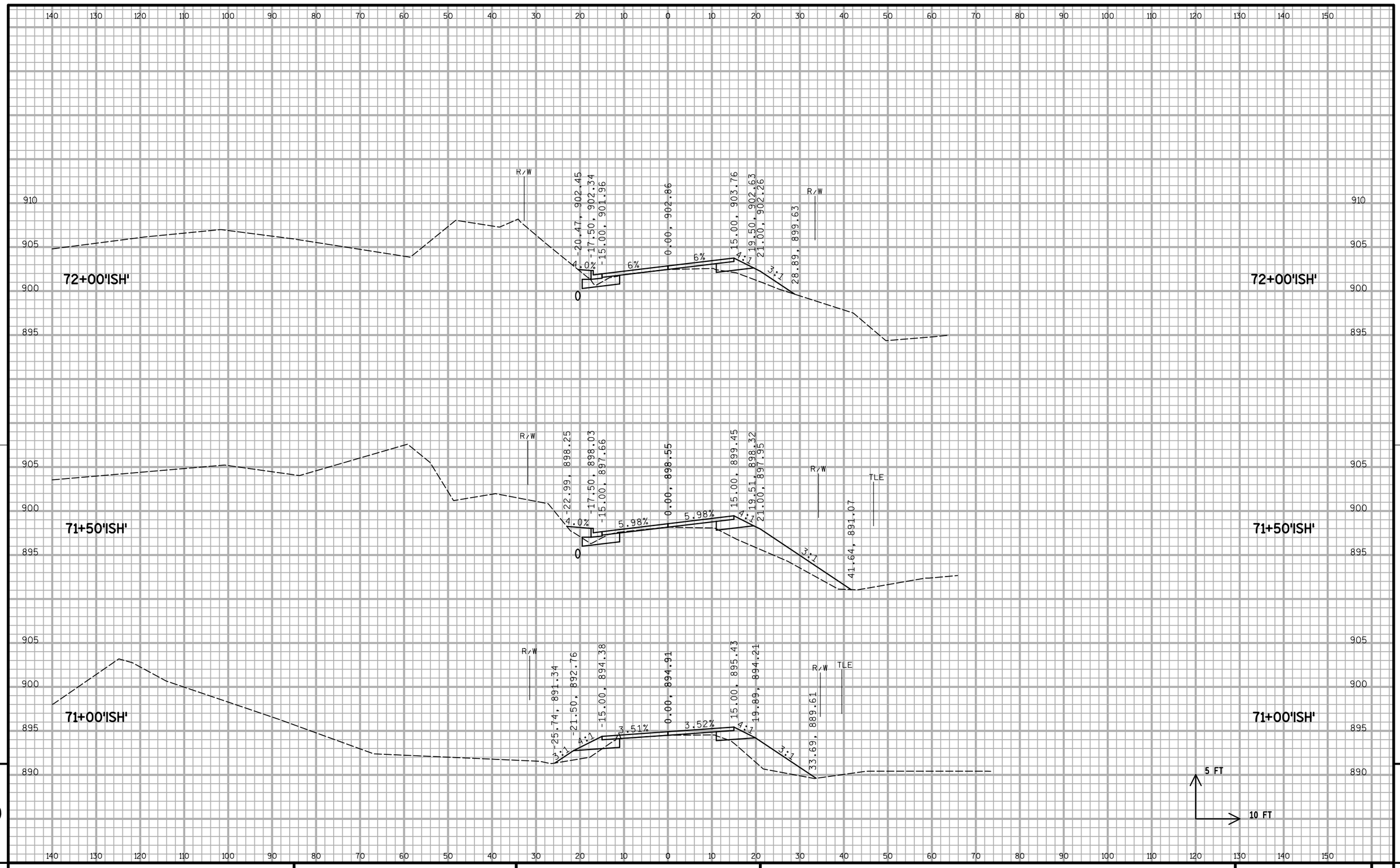

9

9

PROJECT NO: 1674-00-70	HWY: US 12	COUNTY: SAUK	CROSS SECTIONS: ISHNALA ROAD	SHEET	E

FILE NAME : S:\MAD\1000--1099\1089\150\Micros\Design\Ishnala Bikepath\Plan\090202_BP_ISH_xs_V8.dgn PLOT DATE : 11/26/2013 PLOT BY : _username_ PLOT NAME : PLOT SCALE : $$.....plotscale.....$$

WISDOT/CADDS SHEET 21

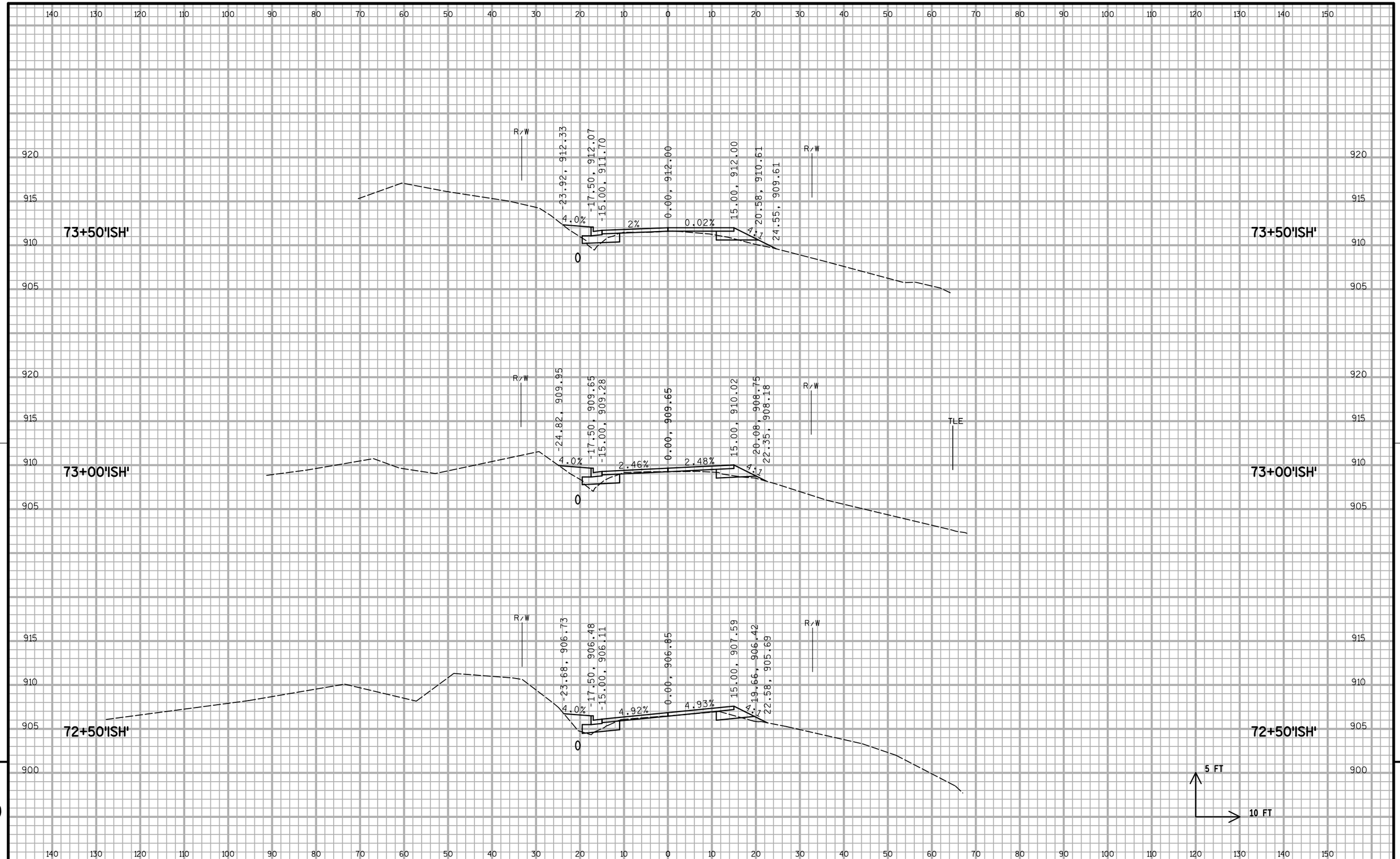

PROJECT NO: 1674-00-70	HWY: US 12	COUNTY: SAUK	CROSS SECTIONS: ISHNALA ROAD	SHEET 208	E

FILE NAME : S:\MAD\1000--1099\1089\150\Micros\Design\Ishnala Bikepath\Plan\090202_BP_ISH_xs_V8.dgn PLOT DATE : 11/26/2013 PLOT BY : _username_ PLOT NAME : PLOT SCALE : $$.....plotscale.....$$ WISDOT/CADDS SHEET 21

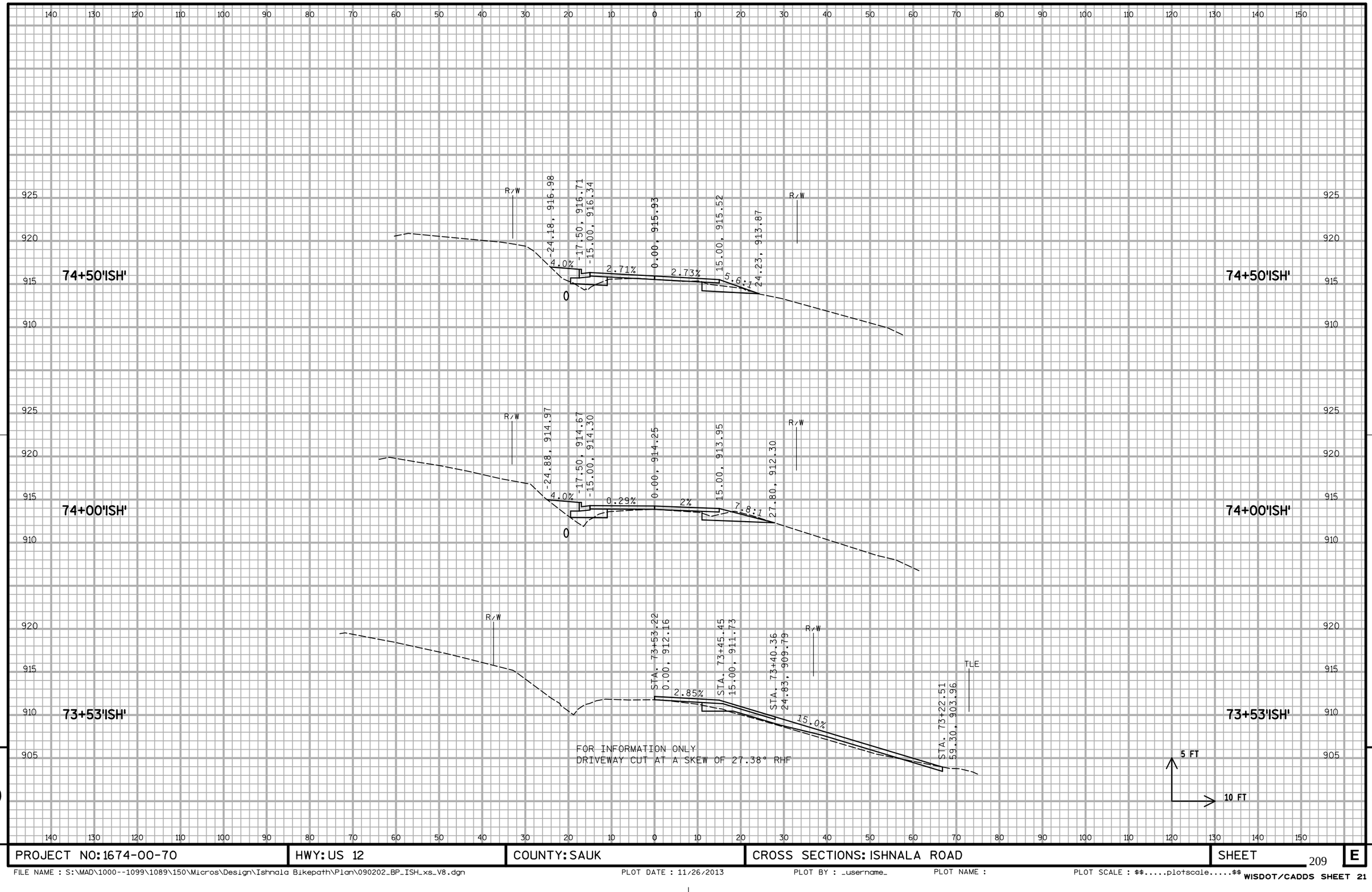

PROJECT NO: 1674-00-70	HWY: US 12	COUNTY: SAUK	CROSS SECTIONS: ISHNALA ROAD	SHEET	E

FILE NAME : S:\MAD\1000--1099\1089\150\Micros\Design\Ishnala Bikepath\Plan\090202_BP_ISH_xs_V8.dgn PLOT DATE : 11/26/2013 PLOT BY : _username_ PLOT NAME : PLOT SCALE : $$.....plotscale.....$$ WISDOT/CADDS SHEET 21

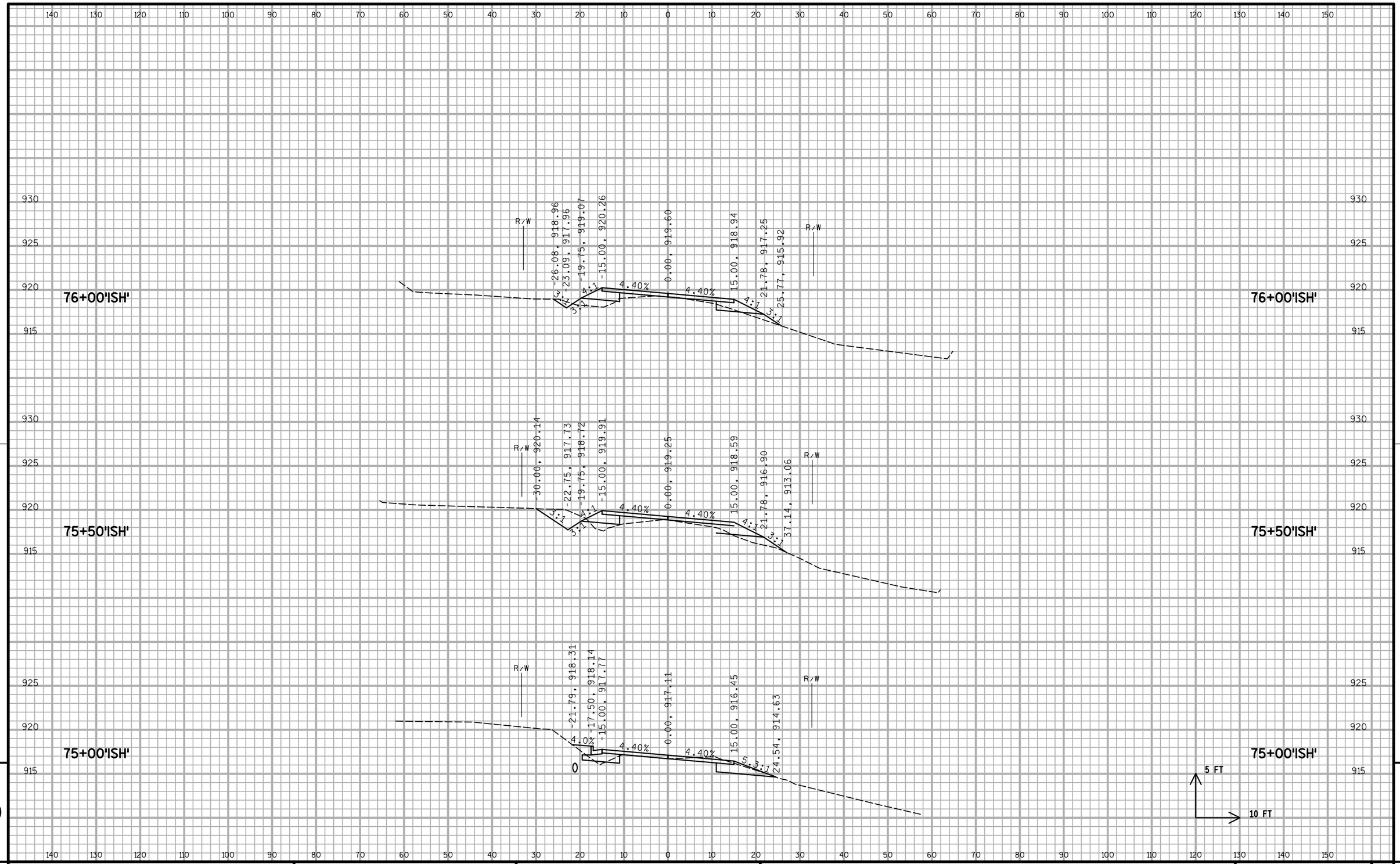

9

PROJECT NO: 1674-00-70	HWY: US 12	COUNTY: SAUK	CROSS SECTIONS: ISHNALA ROAD	SHEET 210	E

FILE NAME : S:\MAD\1000--1099\1089\150\Micros\Design\Ishnala Bikepath\Plan\090202_BP_ISH_xs_V8.dgn PLOT DATE : 11/26/2013 PLOT BY : _username_ PLOT NAME : PLOT SCALE : $$.....plotscale.....$$

WISDOT/CADDS SHEET 21

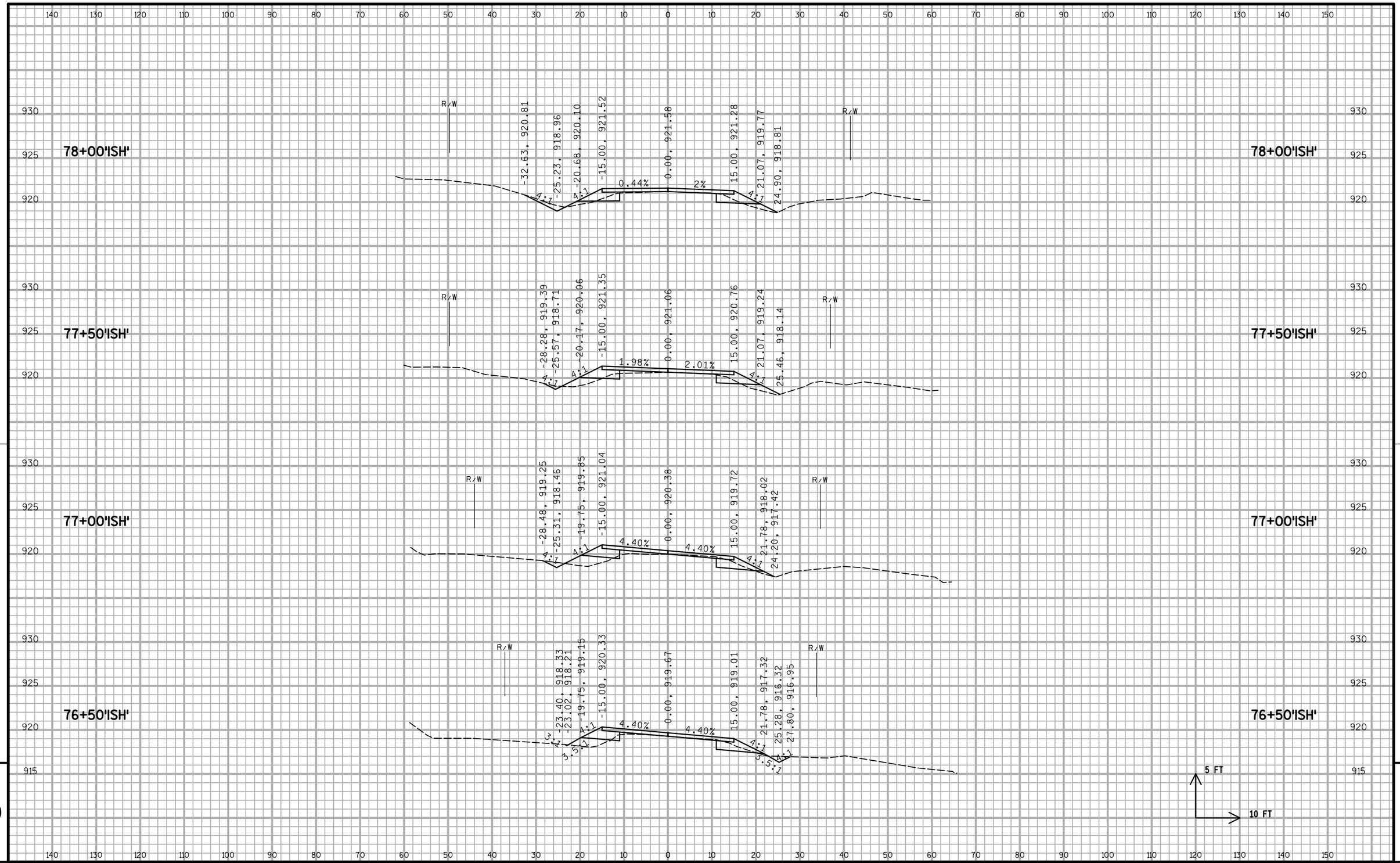

9

9

PROJECT NO: 1674-00-70	HWY: US 12	COUNTY: SAUK	CROSS SECTIONS: ISHNALA ROAD	SHEET 211	E

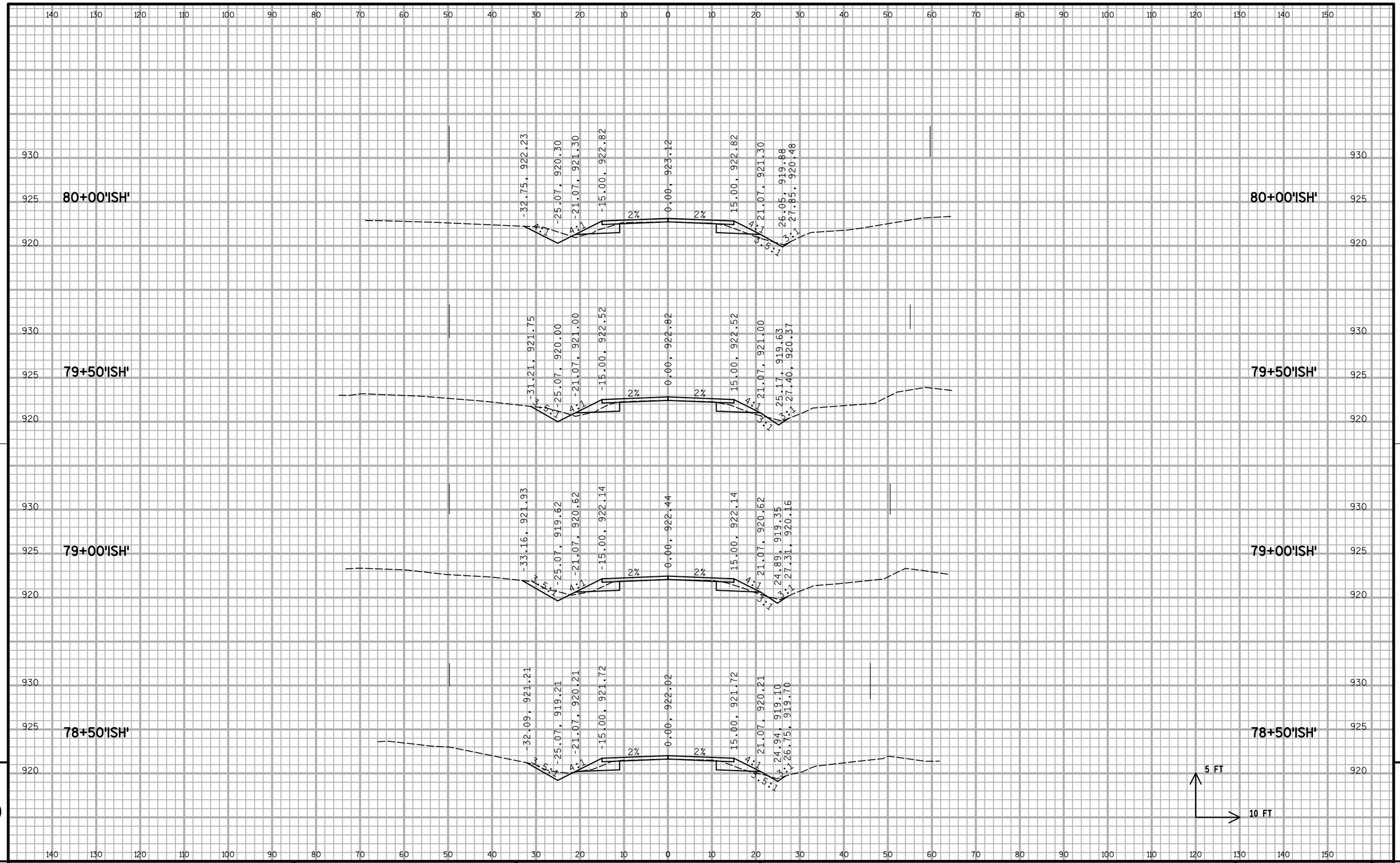

PROJECT NO: 1674-00-70	HWY: US 12	COUNTY: SAUK	CROSS SECTIONS: ISHNALA ROAD	SHEET 212	E

FILE NAME : S:\MAD\1000--1099\1089\150\Micros\Design\Ishnala Bikepath\Plan\090202_BP_ISH_xs_V8.dgn PLOT DATE : 11/26/2013 PLOT BY : _username_ PLOT NAME : PLOT SCALE : $$.....plotscale.....$$ WISDOT/CADDS SHEET 21

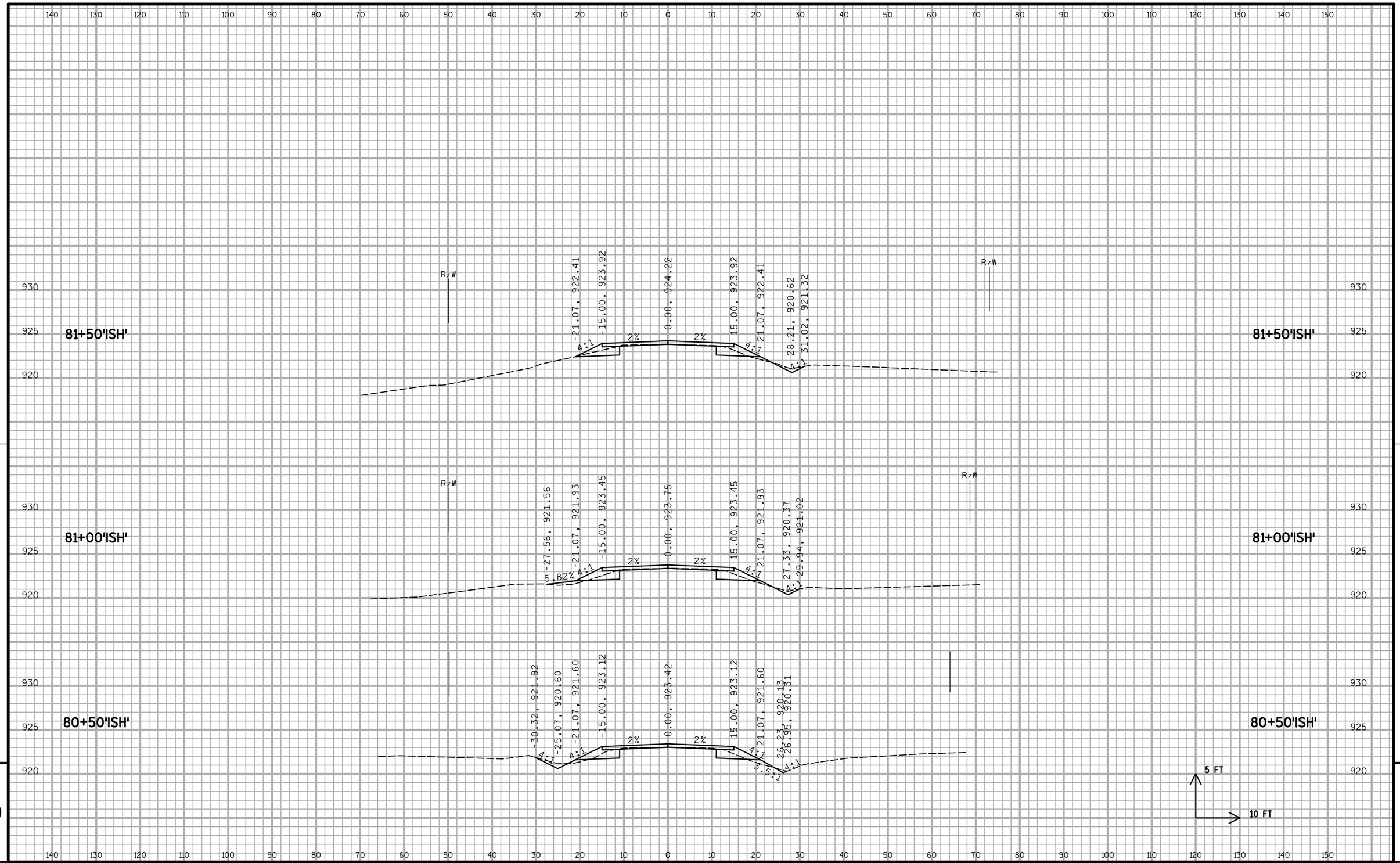

9

9

PROJECT NO: 1674-00-70	HWY: US 12	COUNTY: SAUK	CROSS SECTIONS: ISHNALA ROAD	SHEET 213	E

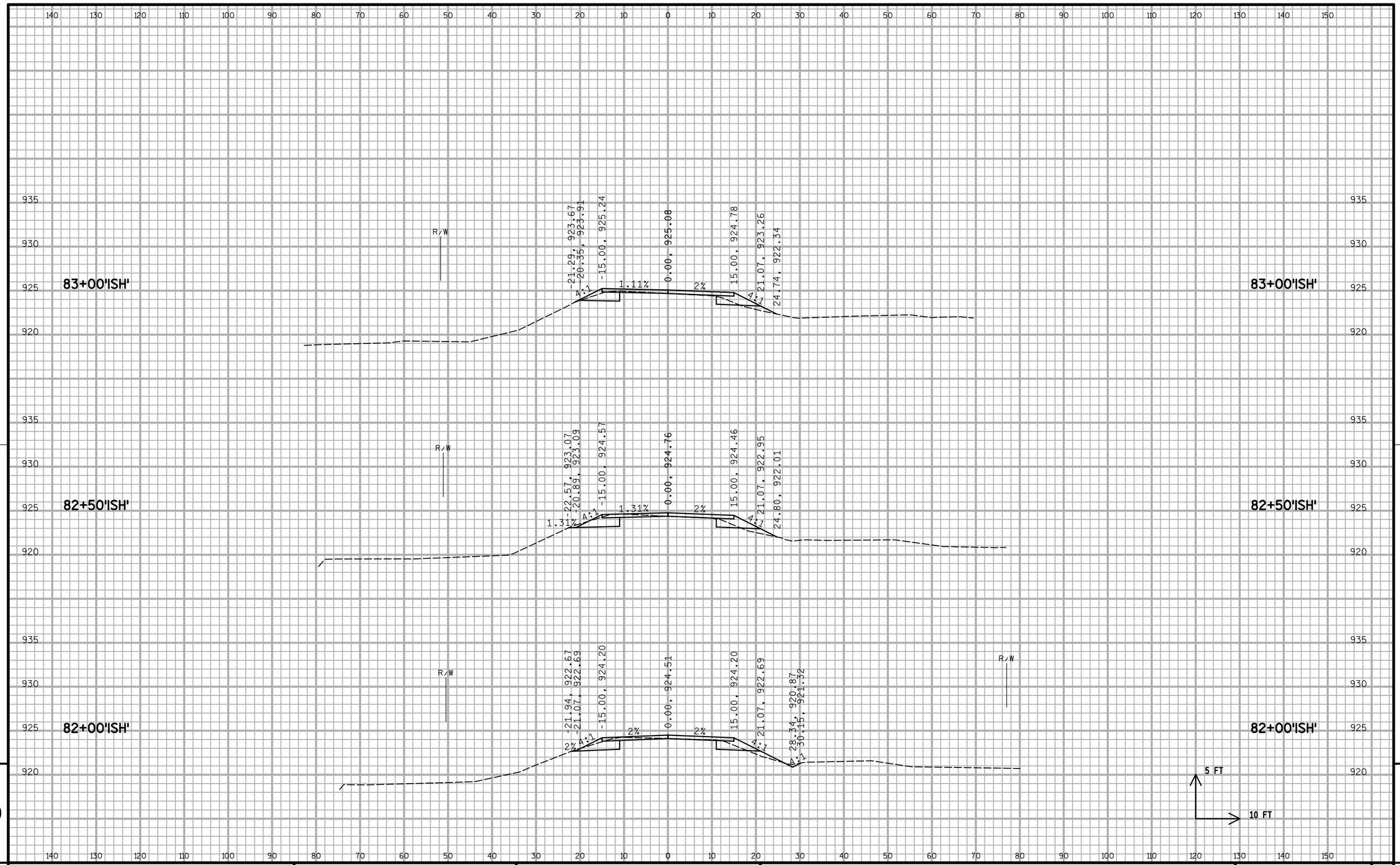

9

9

PROJECT NO: 1674-00-70	HWY: US 12	COUNTY: SAUK	CROSS SECTIONS: ISHNALA ROAD	SHEET 214	E

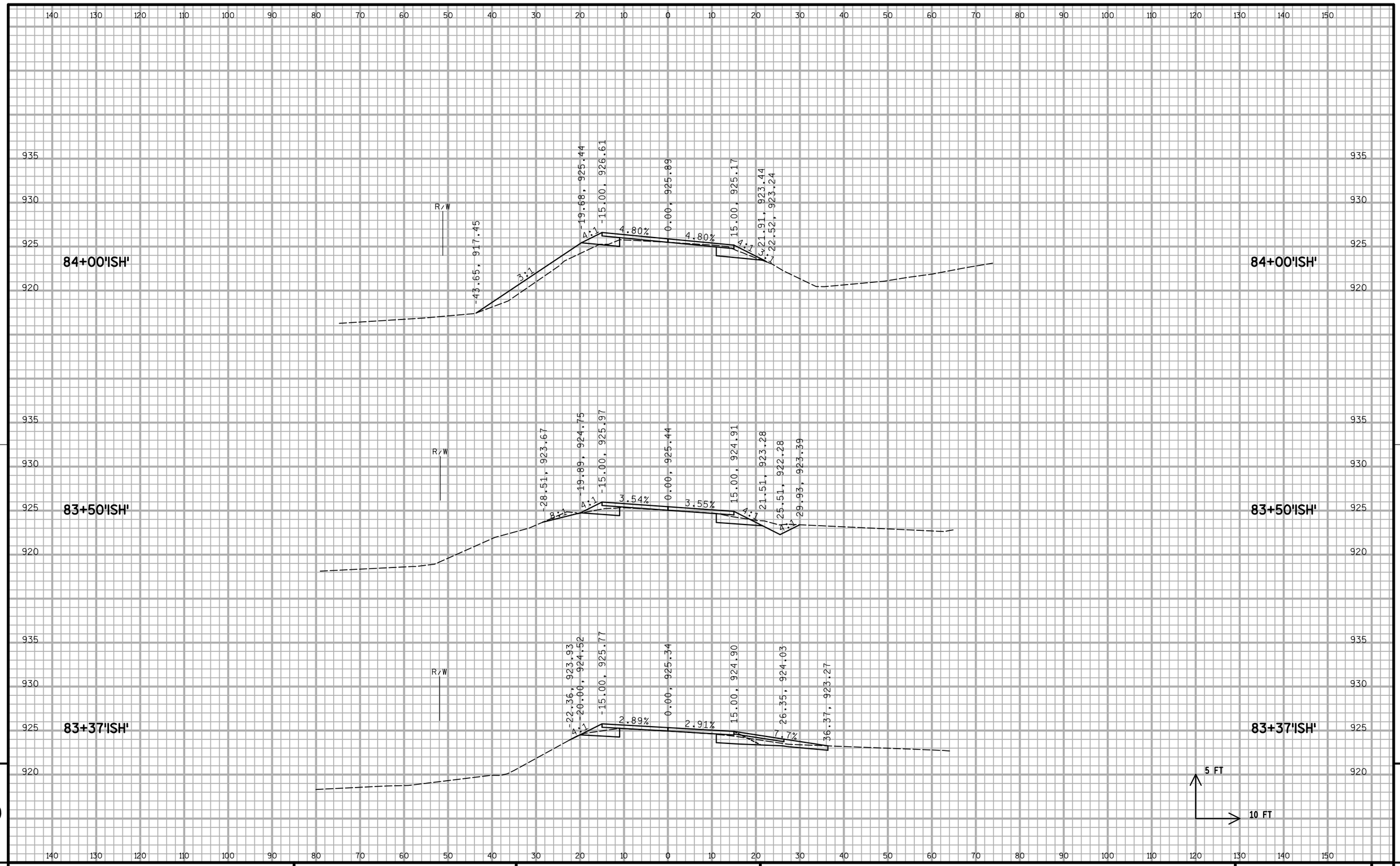

9

9

PROJECT NO: 1674-00-70	HWY: US 12	COUNTY: SAUK	CROSS SECTIONS: ISHNALA ROAD	SHEET 215	E

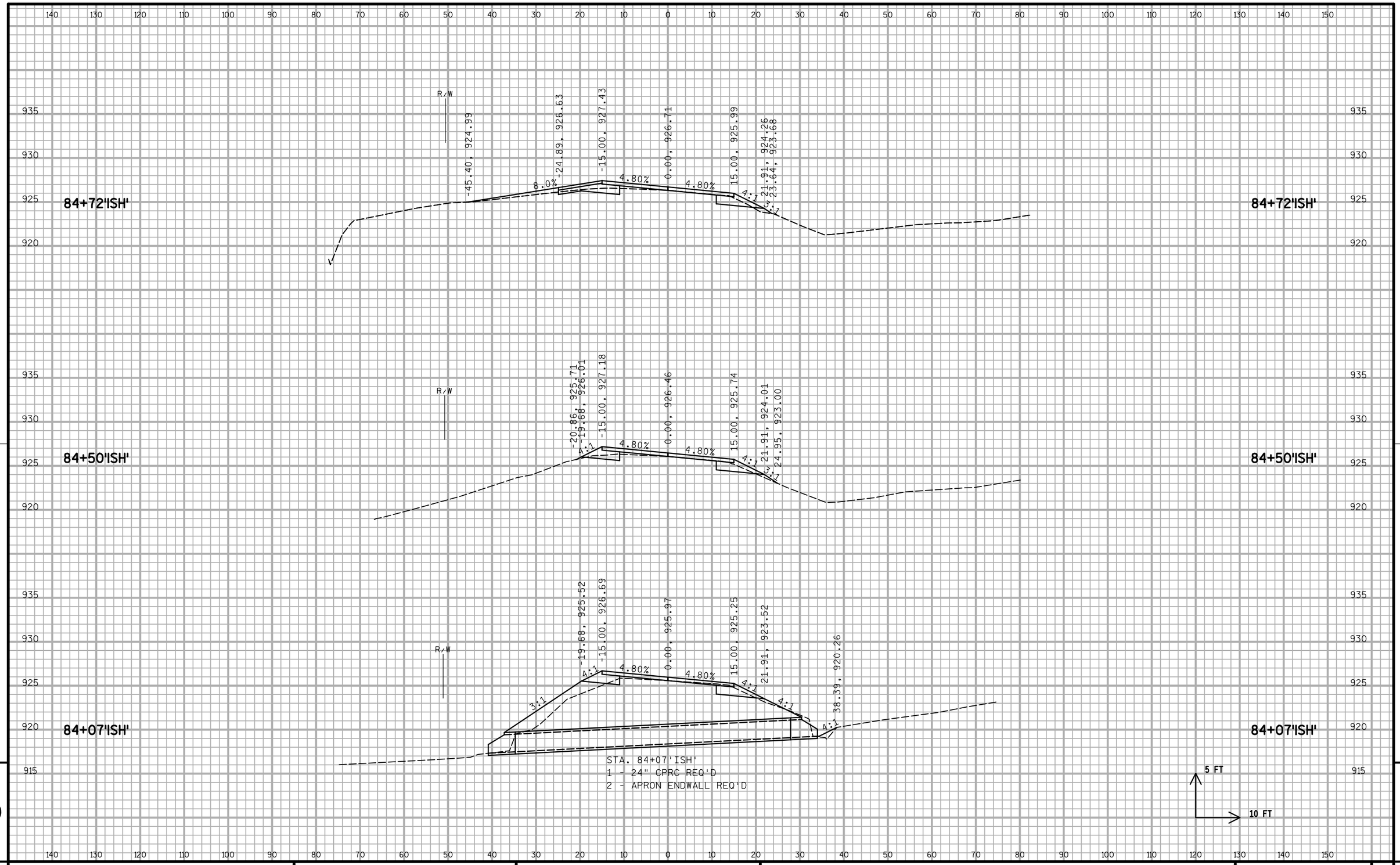

PROJECT NO: 1674-00-70	HWY: US 12	COUNTY: SAUK	CROSS SECTIONS: ISHNALA ROAD	SHEET 216	E

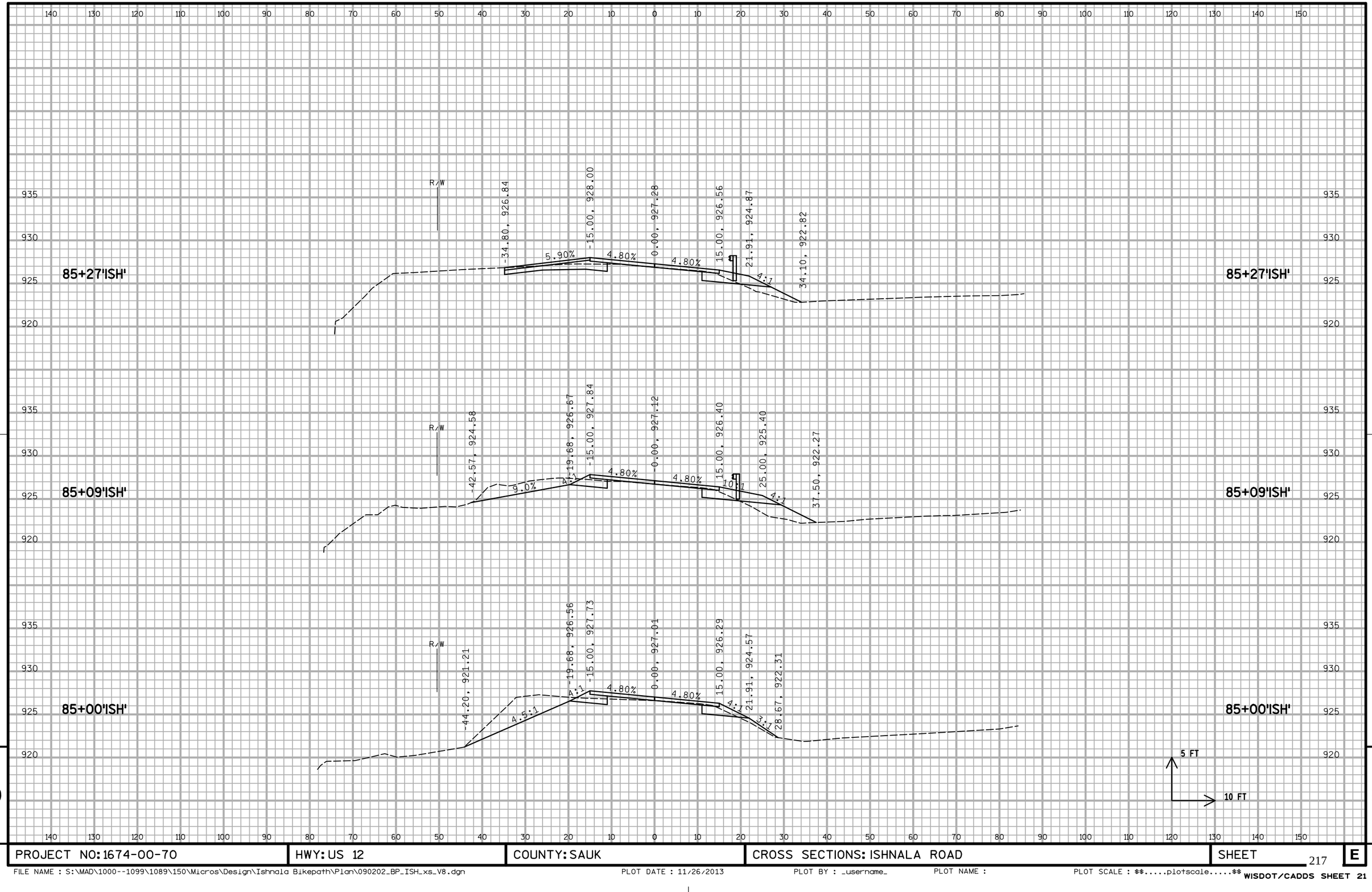

PROJECT NO: 1674-00-70	HWY: US 12	COUNTY: SAUK	CROSS SECTIONS: ISHNALA ROAD	SHEET 217	E

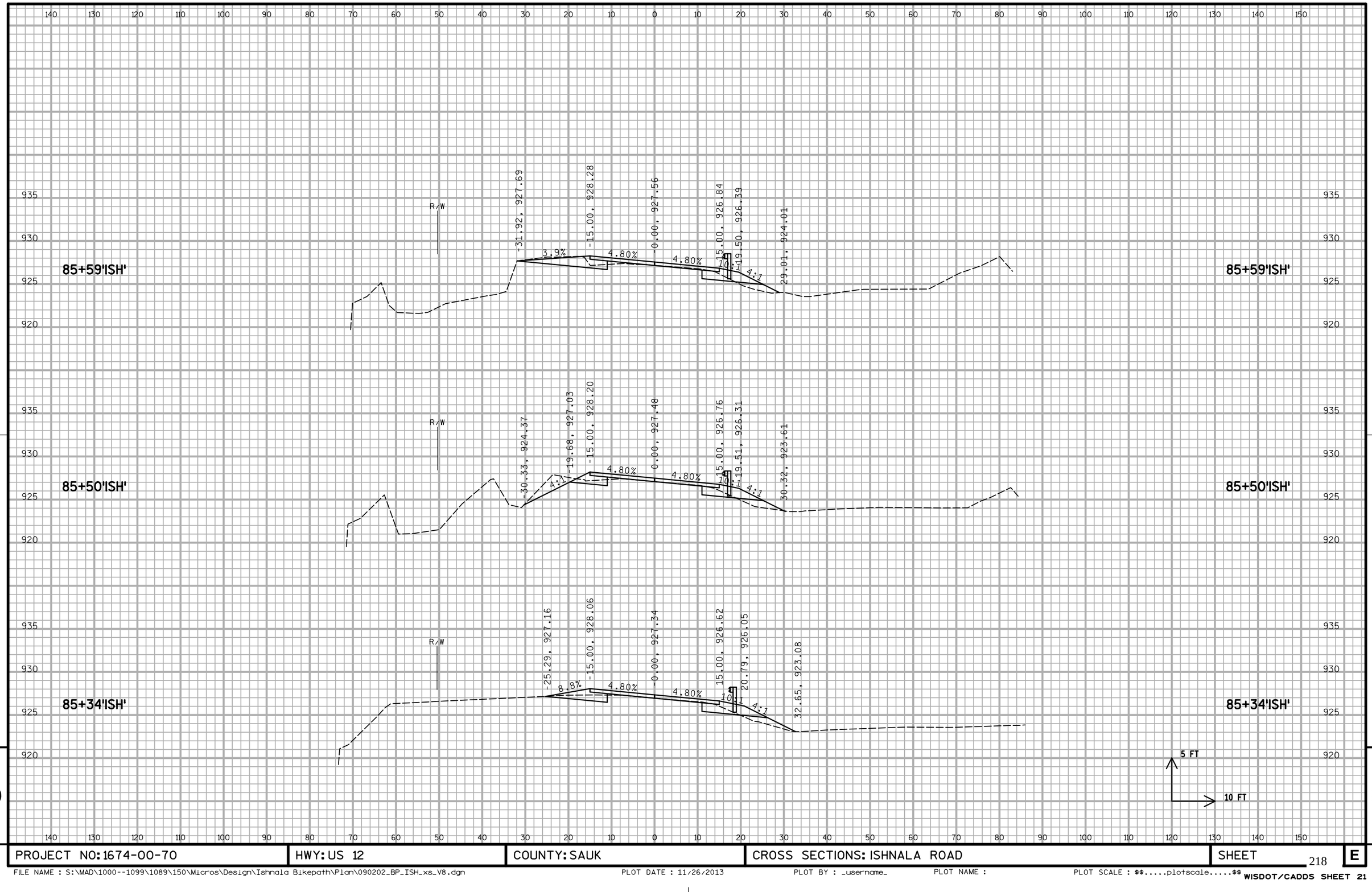

9

9

PROJECT NO: 1674-00-70	HWY: US 12	COUNTY: SAUK	CROSS SECTIONS: ISHNALA ROAD	SHEET 218	E

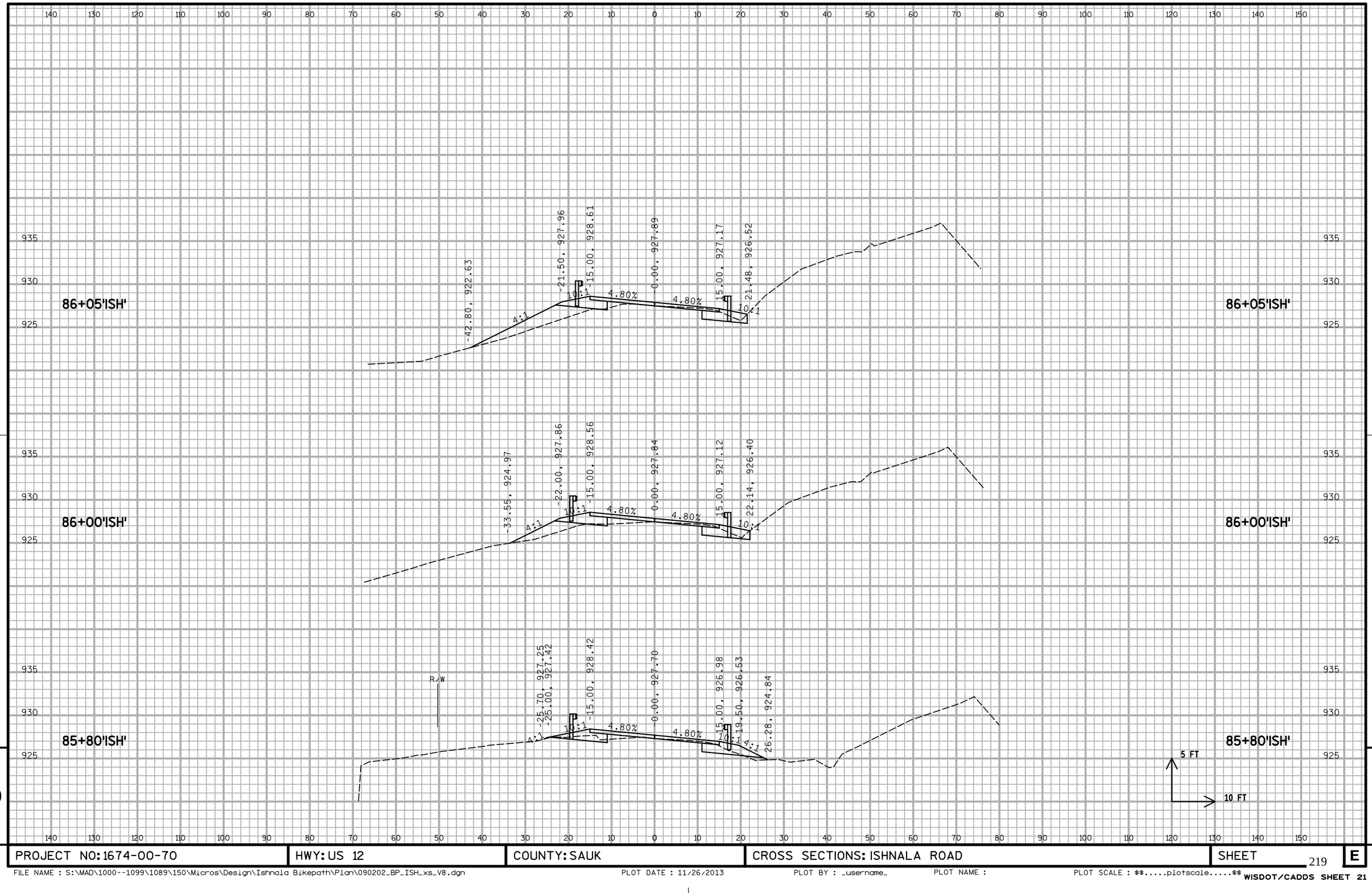

9

9

PROJECT NO: 1674-00-70	HWY: US 12	COUNTY: SAUK	CROSS SECTIONS: ISHNALA ROAD	SHEET 219	E

FILE NAME : S:\MAD\1000--1099\1089\150\Micros\Design\Ishnala Bikepath\Plan\090202_BP_ISH_xs_V8.dgn PLOT DATE : 11/26/2013 PLOT BY : _username_ PLOT NAME : PLOT SCALE : $$.....plotscale.....$$ WISDOT/CADDS SHEET 21

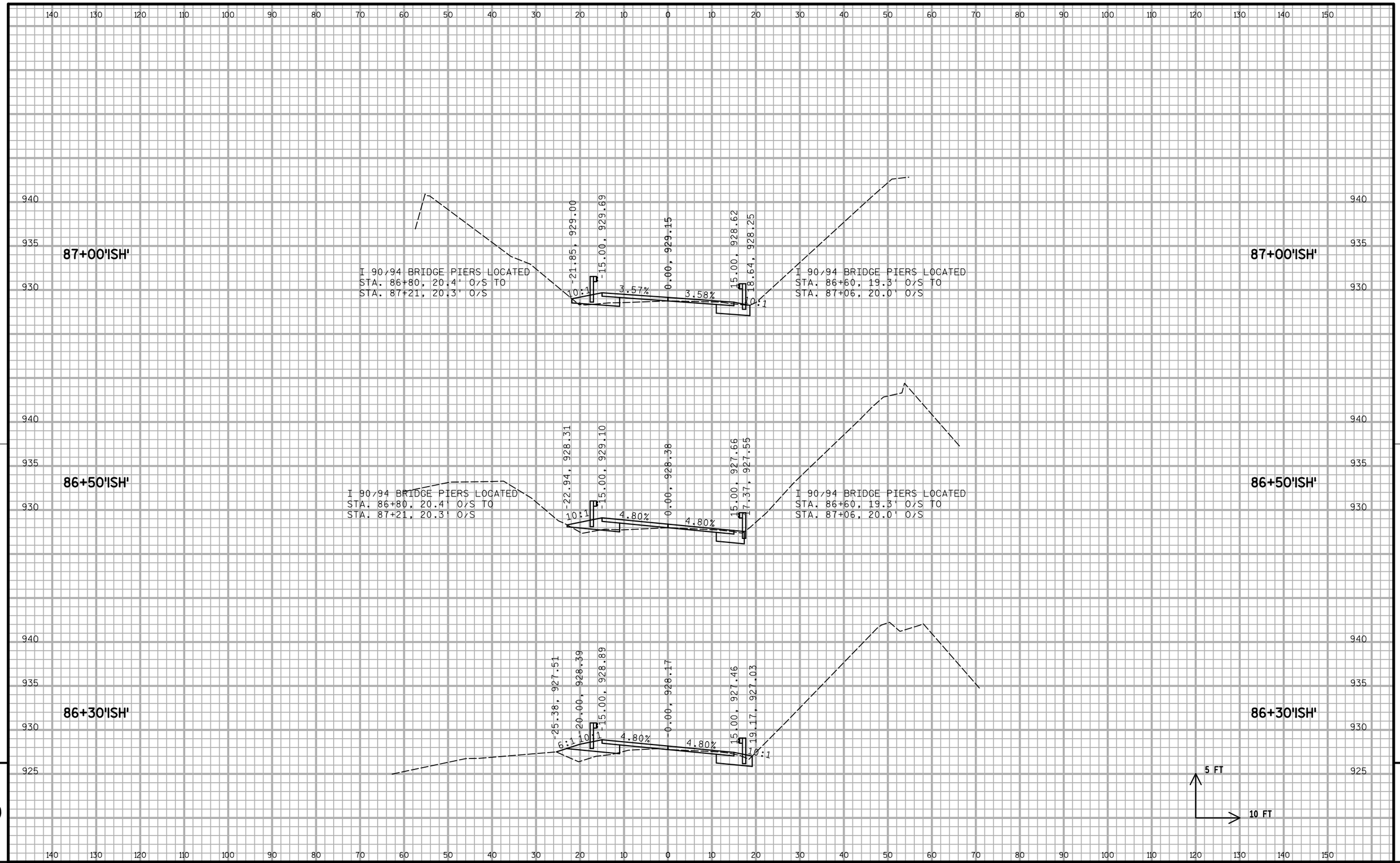

9

PROJECT NO: 1674-00-70	HWY: US 12	COUNTY: SAUK	CROSS SECTIONS: ISHNALA ROAD	SHEET 220	E

9

FILE NAME : S:\MAD\1000--1099\1089\150\Micros\Design\Ishnala Bikepath\Plan\090202_BP_ISH_xs_V8.dgn PLOT DATE : 11/26/2013 PLOT BY : _username_ PLOT NAME : PLOT SCALE : $$.....plotscale.....$$ WISDOT/CADDS SHEET 21

88+50'ISH'

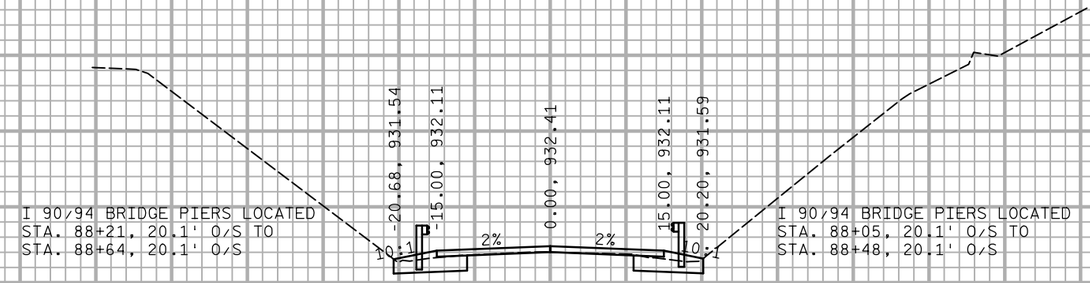

88+00'ISH'

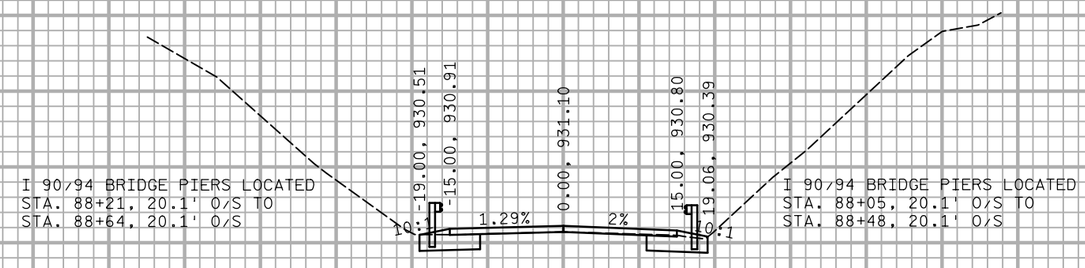

87+50'ISH'

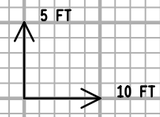

88+50'ISH'

88+00'ISH'

87+50'ISH'

9

PROJECT NO: 1674-00-70	HWY: US 12	COUNTY: SAUK	CROSS SECTIONS: ISHNALA ROAD	SHEET 221	E

FILE NAME : S:\MAD\1000--1099\1089\150\Micros\Design\Ishnala Bikepath\Plan\090202_BP_ISH_xs_V8.dgn PLOT DATE : 11/26/2013 PLOT BY : _username_ PLOT NAME : PLOT SCALE : $$.....plotscale.....$$ WISDOT/CADDS SHEET 21

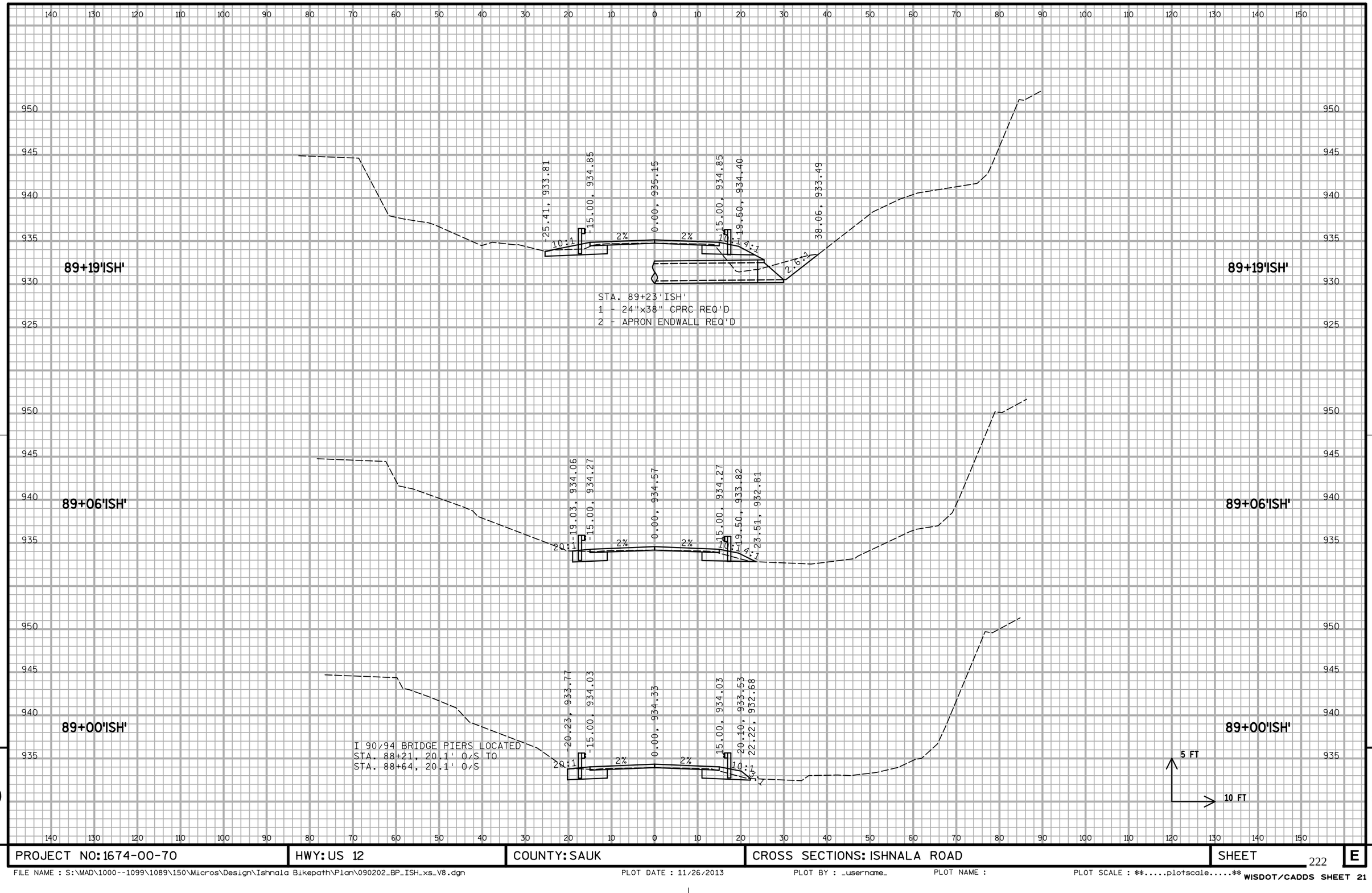

PROJECT NO: 1674-00-70	HWY: US 12	COUNTY: SAUK	CROSS SECTIONS: ISHNALA ROAD	SHEET 222	E

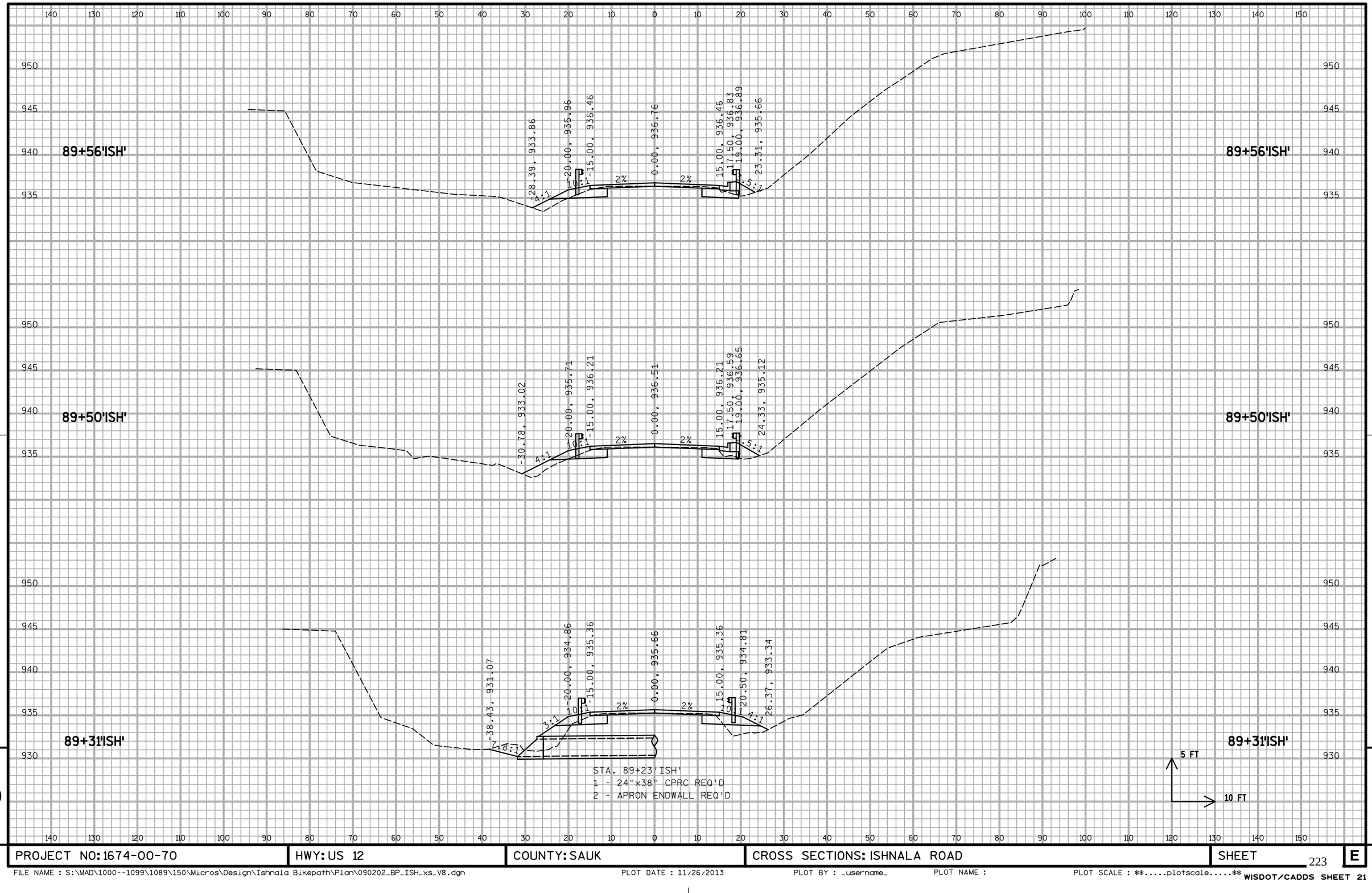

STA. 89+23'ISH'
1 - 24"x38" CPRC REQ'D
2 - APRON ENDWALL REQ'D

9

9

PROJECT NO: 1674-00-70	HWY: US 12	COUNTY: SAUK	CROSS SECTIONS: ISHNALA ROAD	SHEET 223	E

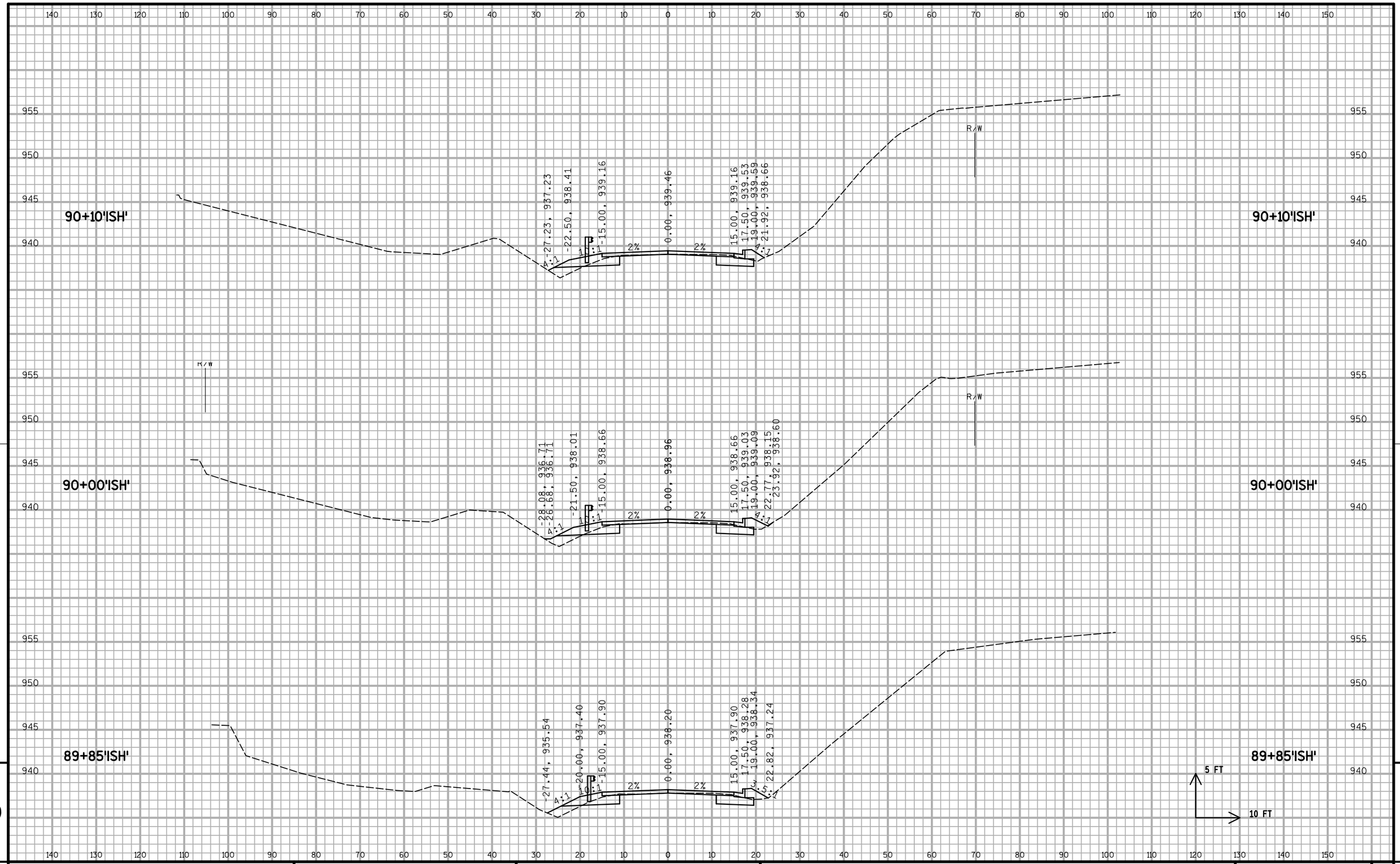

PROJECT NO: 1674-00-70	HWY: US 12	COUNTY: SAUK	CROSS SECTIONS: ISHNALA ROAD	SHEET 224	E

FILE NAME : S:\MAD\1000--1099\1089\150\Micros\Design\Ishnala Bikepath\Plan\090202_BP_ISH_xs_V8.dgn PLOT DATE : 11/26/2013 PLOT BY : _username_ PLOT NAME : PLOT SCALE : $$.....plotscale.....$$

WISDOT/CADDS SHEET 21

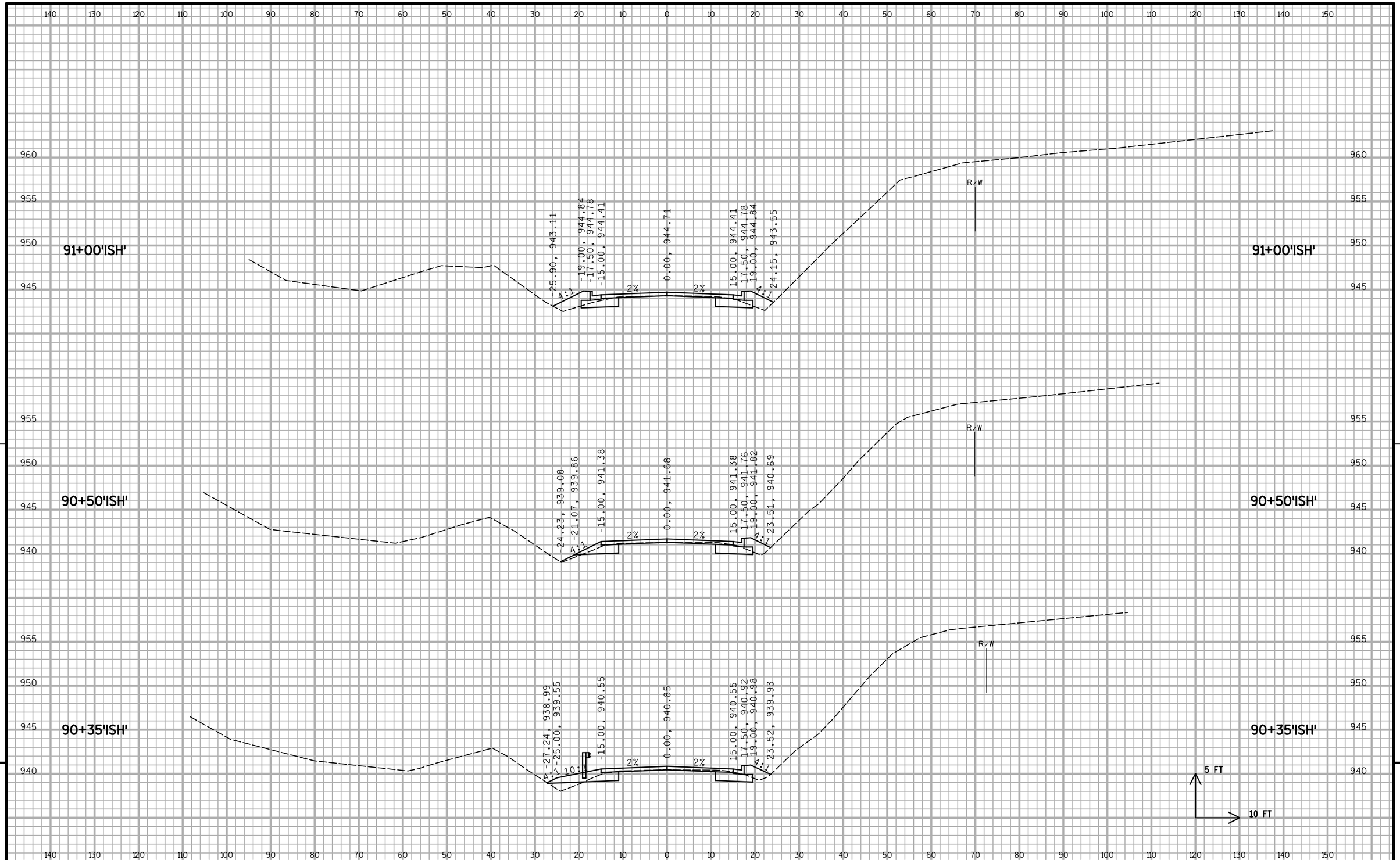

9

9

PROJECT NO: 1674-00-70	HWY: US 12	COUNTY: SAUK	CROSS SECTIONS: ISHNALA ROAD	SHEET 225	E

FILE NAME : S:\MAD\1000--1099\1089\150\Micros\Design\Ishnala Bikepath\Plan\090202_BP_ISH_xs_V8.dgn PLOT DATE : 11/26/2013 PLOT BY : _username_ PLOT NAME : PLOT SCALE : $$.....plotscale.....$$ WISDOT/CADDS SHEET 21

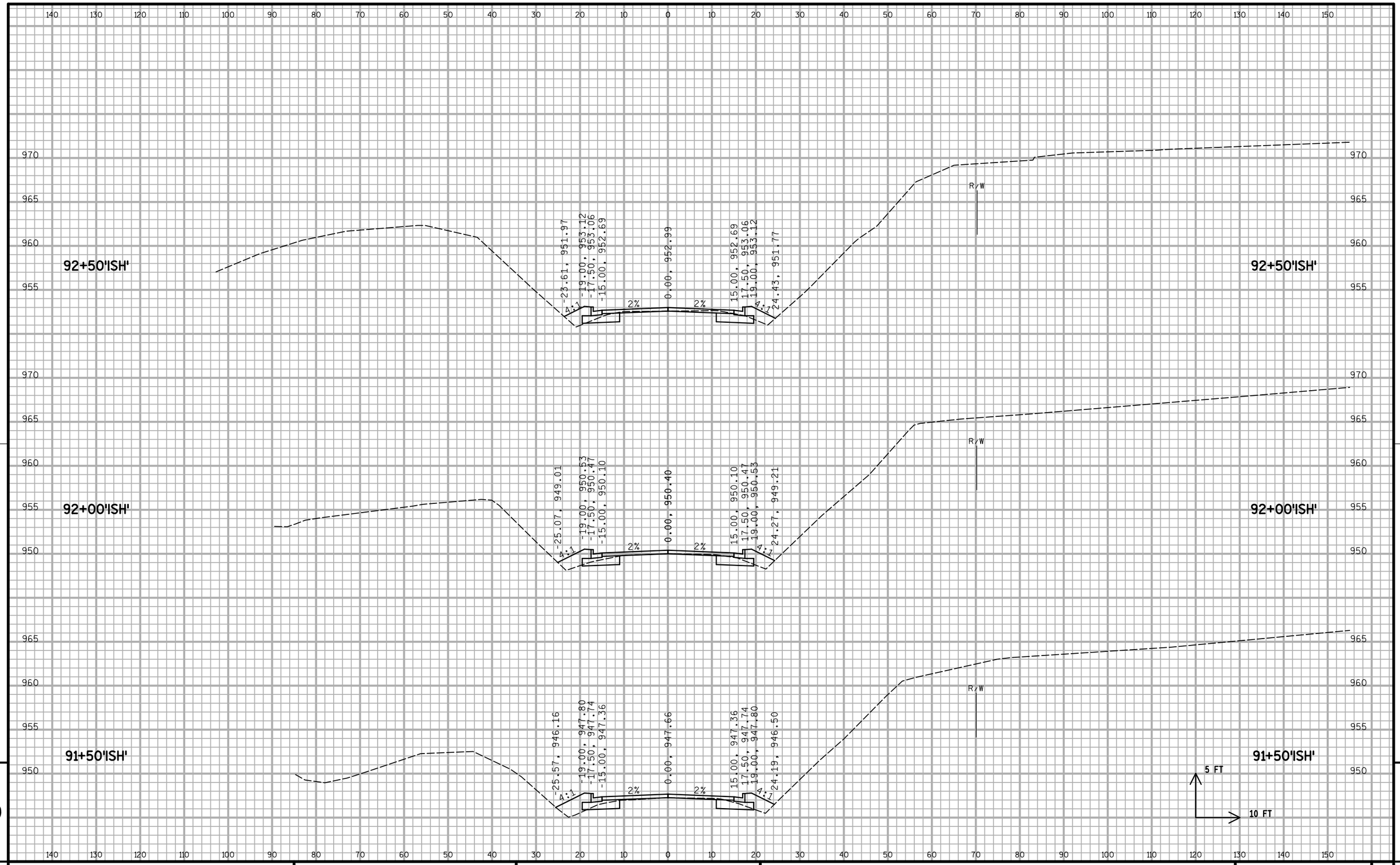

9

9

PROJECT NO: 1674-00-70	HWY: US 12	COUNTY: SAUK	CROSS SECTIONS: ISHNALA ROAD	SHEET	E

FILE NAME : S:\MAD\1000--1099\1089\150\Micros\Design\Ishnala Bikepath\Plan\090202_BP_ISH_xs_V8.dgn PLOT DATE : 11/26/2013 PLOT BY : _username_ PLOT NAME : PLOT SCALE : $$.....plotscale.....$$ WISDOT/CADDS SHEET 21

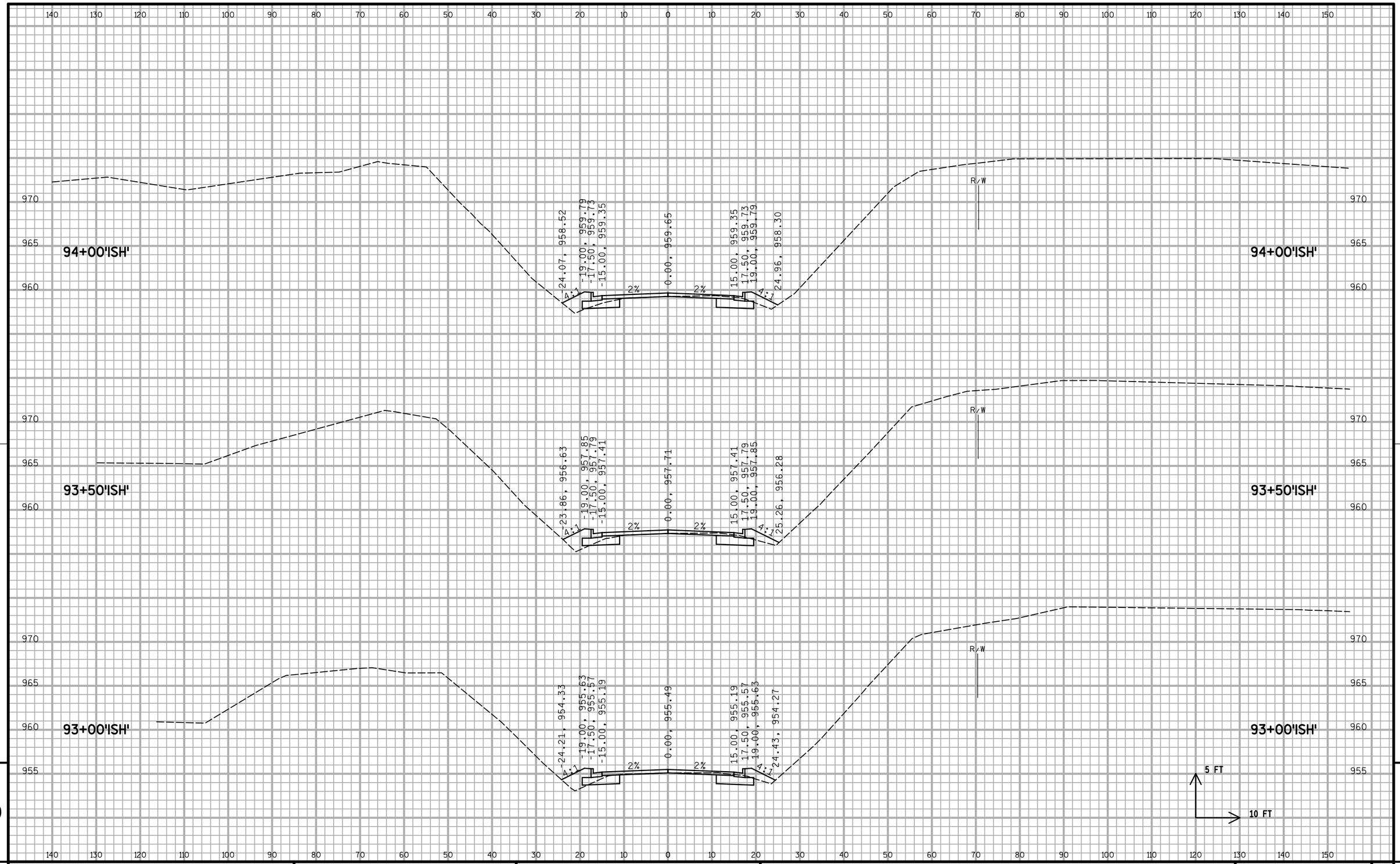

9

9

PROJECT NO: 1674-00-70	HWY: US 12	COUNTY: SAUK	CROSS SECTIONS: ISHNALA ROAD	SHEET 227	E

140 130 120 110 100 90 80 70 60 50 40 30 20 10 0 10 20 30 40 50 60 70 80 90 100 110 120 130 140 150

985 980 975 970 965

R/W

95+00'ISH'

-24.27, 961.40
-19.00, 962.71
-17.50, 962.65
-15.00, 962.28
4:1 2% 0.00, 962.58 2% 4:1
15.00, 962.28
17.50, 962.65
19.00, 962.71
24.41, 961.36

R/W

95+00'ISH'

980 975 970 965

R/W

94+50'ISH'

-24.41, 960.08
-19.00, 961.44
-17.50, 961.38
-15.00, 961.00
4:1 2% 0.00, 961.30 2% 4:1
15.00, 961.00
17.50, 961.38
19.00, 961.44
24.68, 960.02

R/W

94+50'ISH'

960

5 FT

10 FT

9

9

PROJECT NO: 1674-00-70	HWY: US 12	COUNTY: SAUK	CROSS SECTIONS: ISHNALA ROAD	SHEET 228	E

FILE NAME : S:\MAD\1000--1099\1089\150\Micros\Design\Ishnala Bikepath\Plan\090202_BP_ISH_xs_V8.dgn PLOT DATE : 11/26/2013 PLOT BY : _username_ PLOT NAME : PLOT SCALE : $$.....plotscale.....$$

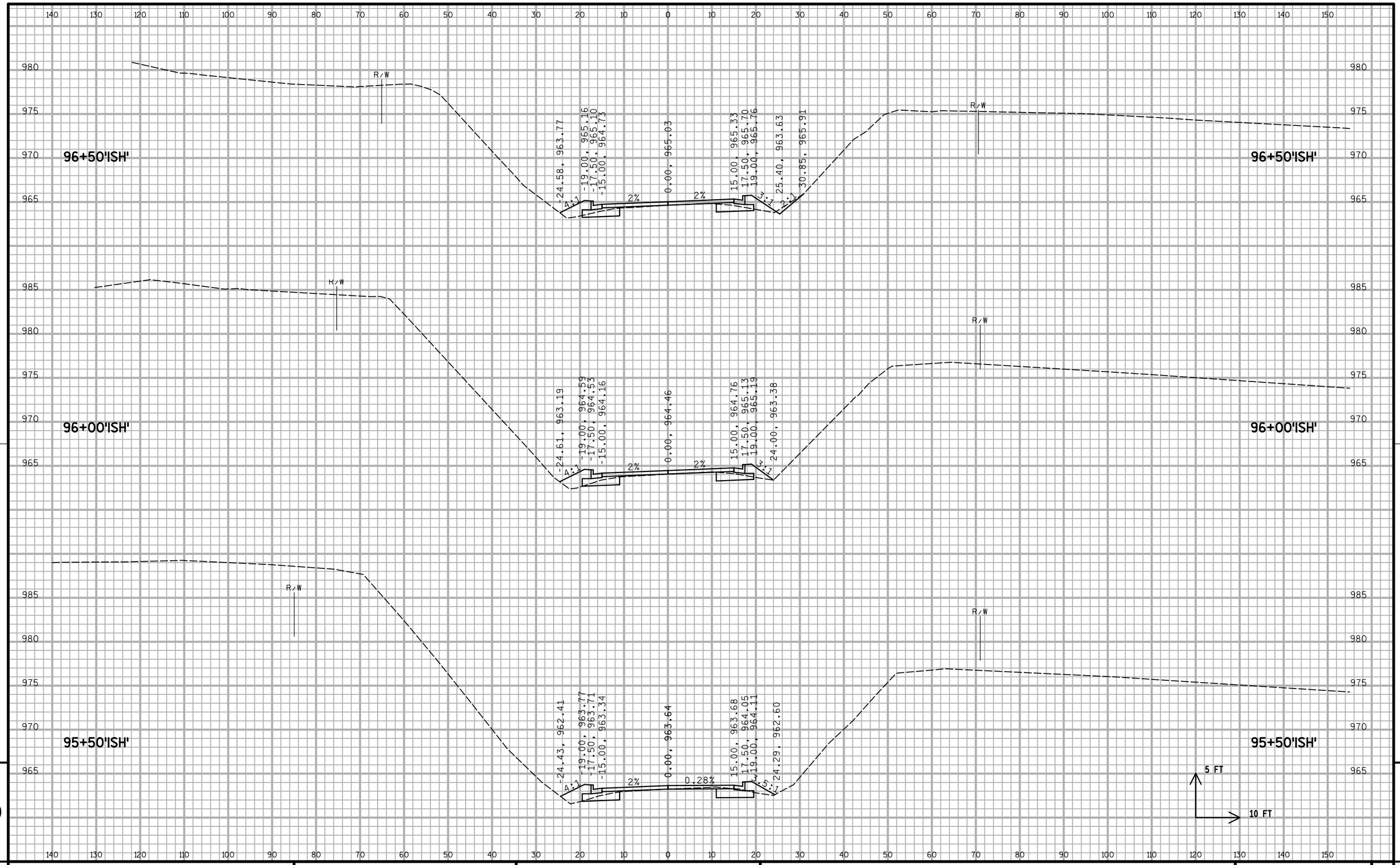

9

9

PROJECT NO: 1674-00-70	HWY: US 12	COUNTY: SAUK	CROSS SECTIONS: ISHNALA ROAD	SHEET	E

FILE NAME : S:\MAD\1000--1099\1089\150\Micros\Design\Ishnala Bikepath\Plan\090202_BP_ISH_xs_V8.dgn PLOT DATE : 11/26/2013 PLOT BY : _username_ PLOT NAME : PLOT SCALE : $$.....plotscale.....$$ WISDOT/CADDS SHEET 21

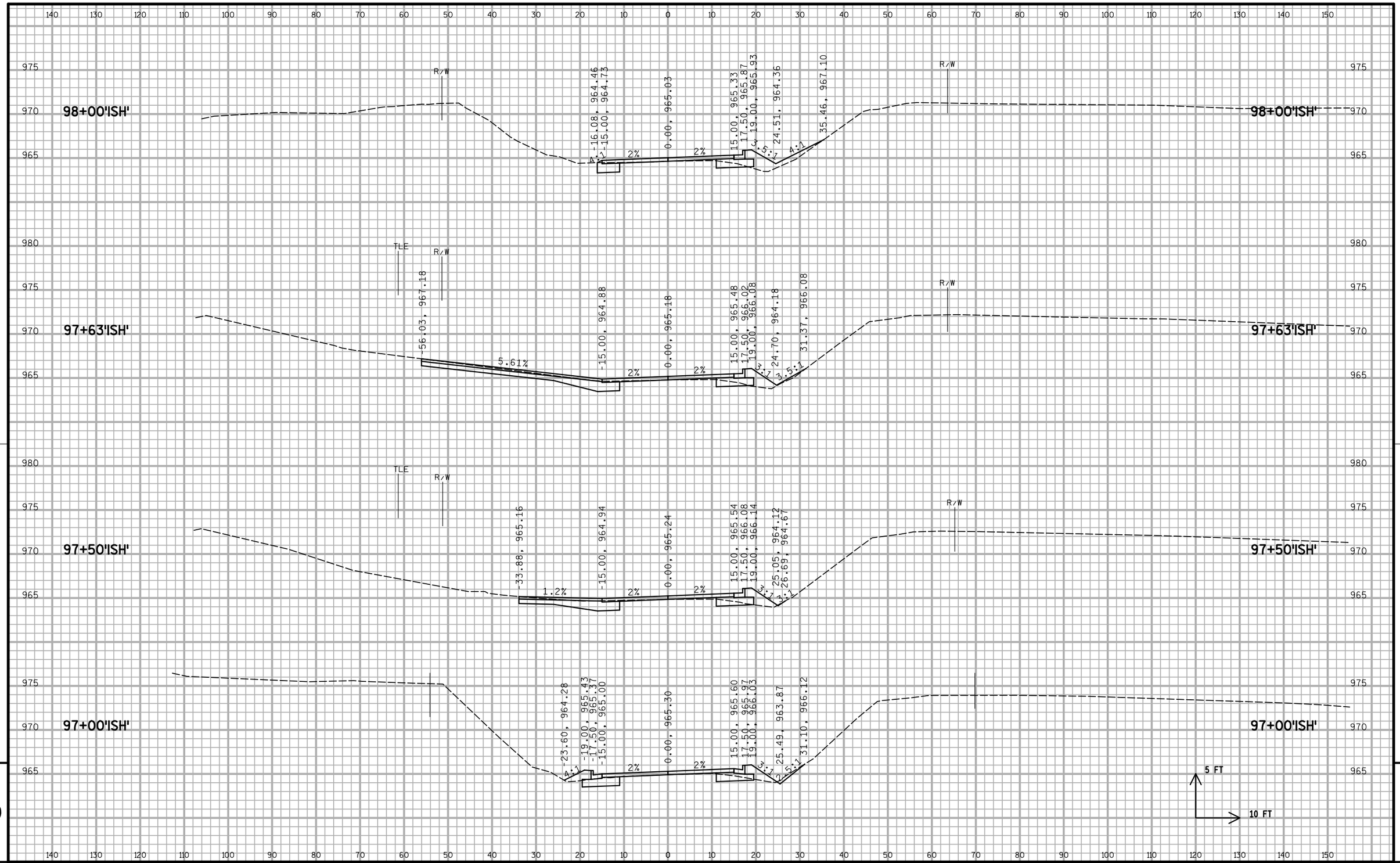

PROJECT NO: 1674-00-70	HWY: US 12	COUNTY: SAUK	CROSS SECTIONS: ISHNALA ROAD	SHEET 230	E

FILE NAME : S:\MAD\1000--1099\1089\150\Micros\Design\Ishnala Bikepath\Plan\090202_BP_ISH_xs_V8.dgn PLOT DATE : 11/26/2013 PLOT BY : _username_ PLOT NAME : PLOT SCALE : $$.....plotscale.....$$ WISDOT/CADDS SHEET 21

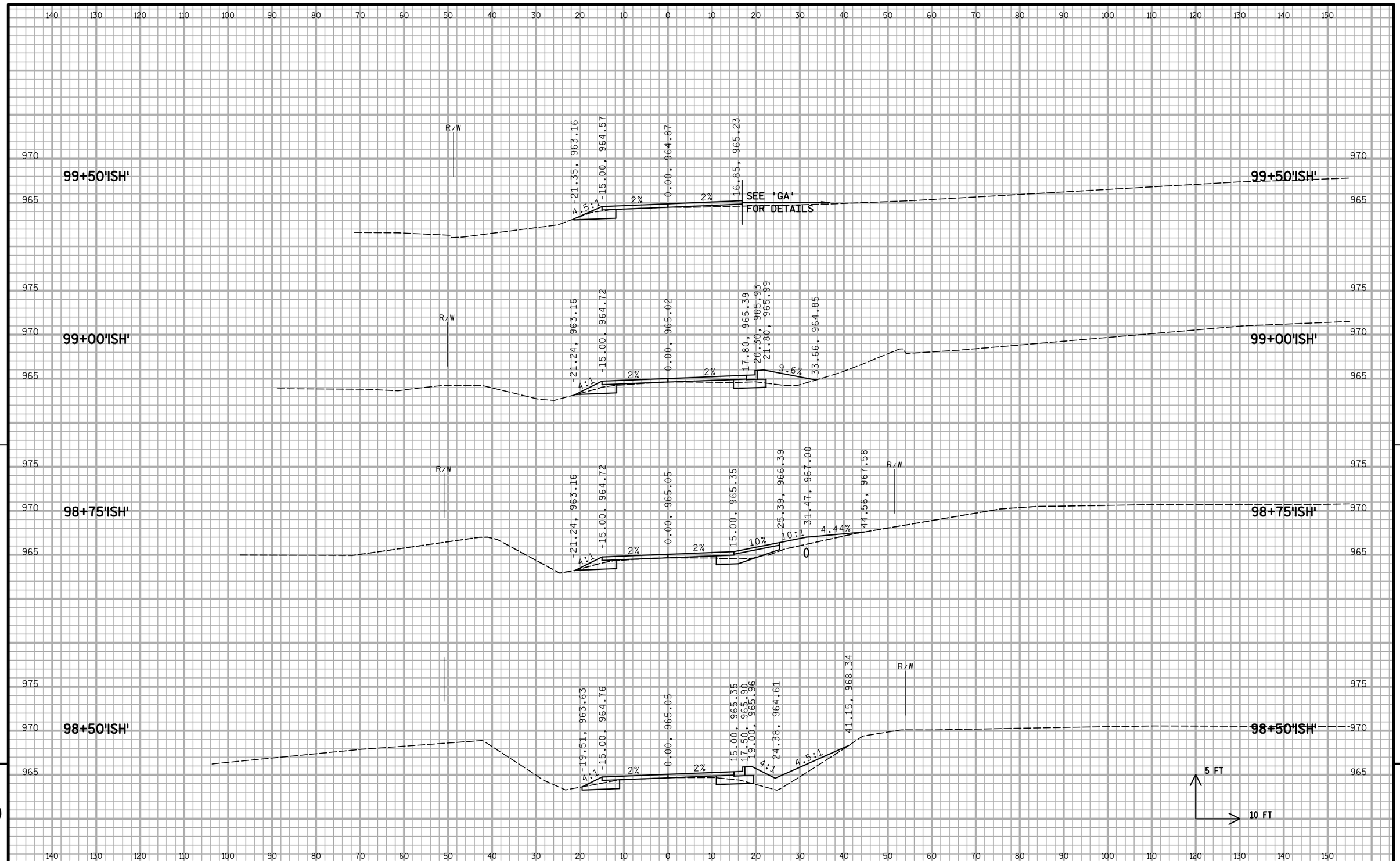

PROJECT NO: 1674-00-70	HWY: US 12	COUNTY: SAUK	CROSS SECTIONS: ISHNALA ROAD	SHEET 231	E

FILE NAME : S:\MAD\1000--1099\1089\150\Micros\Design\Ishnala Bikepath\Plan\090202_BP_ISH_xs_V8.dgn PLOT DATE : 11/26/2013 PLOT BY : _username_ PLOT NAME : PLOT SCALE : $$.....plotscale.....$$ WISDOT/CADDS SHEET 21

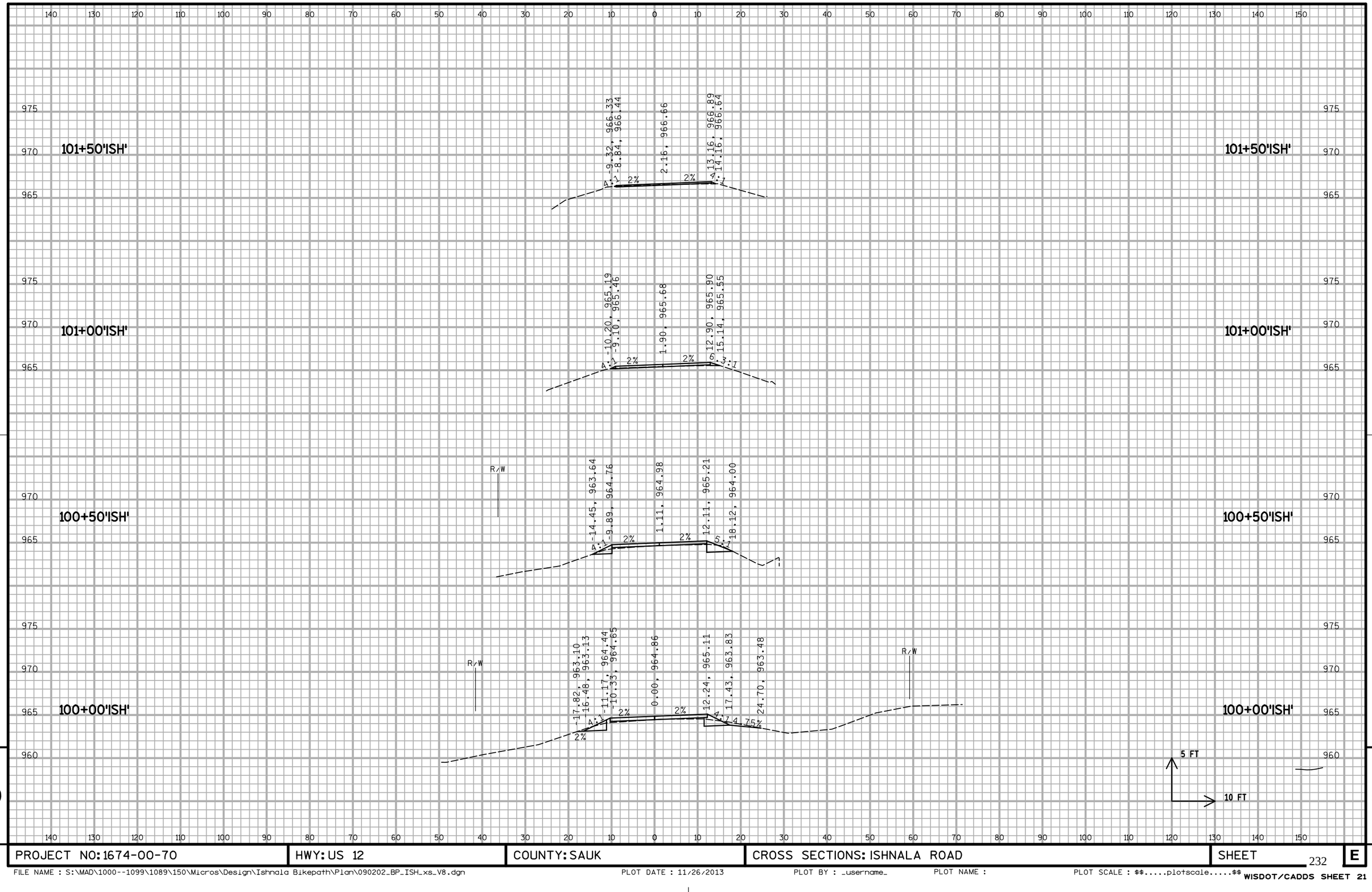

9

9

PROJECT NO: 1674-00-70	HWY: US 12	COUNTY: SAUK	CROSS SECTIONS: ISHNALA ROAD	SHEET 232	E

FILE NAME : S:\MAD\1000--1099\1089\150\Micros\Design\Ishnala Bikepath\Plan\090202_BP_ISH_xs_V8.dgn PLOT DATE : 11/26/2013 PLOT BY : _username_ PLOT NAME : PLOT SCALE : $$.....plotscale.....$$ WISDOT/CADDS SHEET 21

140 130 120 110 100 90 80 70 60 50 40 30 20 10 0 10 20 30 40 50 60 70 80 90 100 110 120 130 140 150

975
970

102+62'ISH'

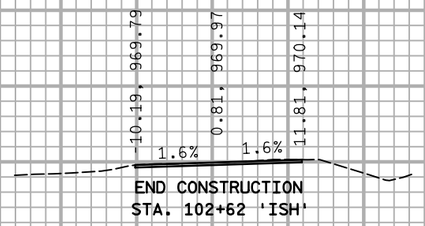

END CONSTRUCTION
STA. 102+62 'ISH'

975
970
102+62'ISH'

975
970

102+50'ISH'

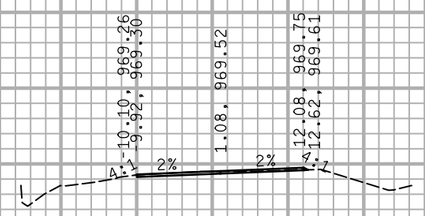

975
970
102+50'ISH'

975
970
965

102+00'ISH'

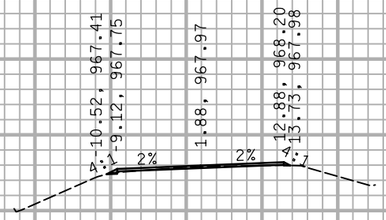

975
970
965
102+00'ISH'

5 FT
10 FT

9

9

140 130 120 110 100 90 80 70 60 50 40 30 20 10 0 10 20 30 40 50 60 70 80 90 100 110 120 130 140 150

PROJECT NO: 1674-00-70	HWY: US 12	COUNTY: SAUK	CROSS SECTIONS: ISHNALA ROAD	SHEET 233	E

FILE NAME : S:\MAD\1000--1099\1089\150\Micros\Design\Ishnala Bikepath\Plan\090202_BP_ISH_xs_V8.dgn PLOT DATE : 11/26/2013 PLOT BY : _username_ PLOT NAME : PLOT SCALE : $$.....plotscale.....$$ WISDOT/CADDS SHEET 21

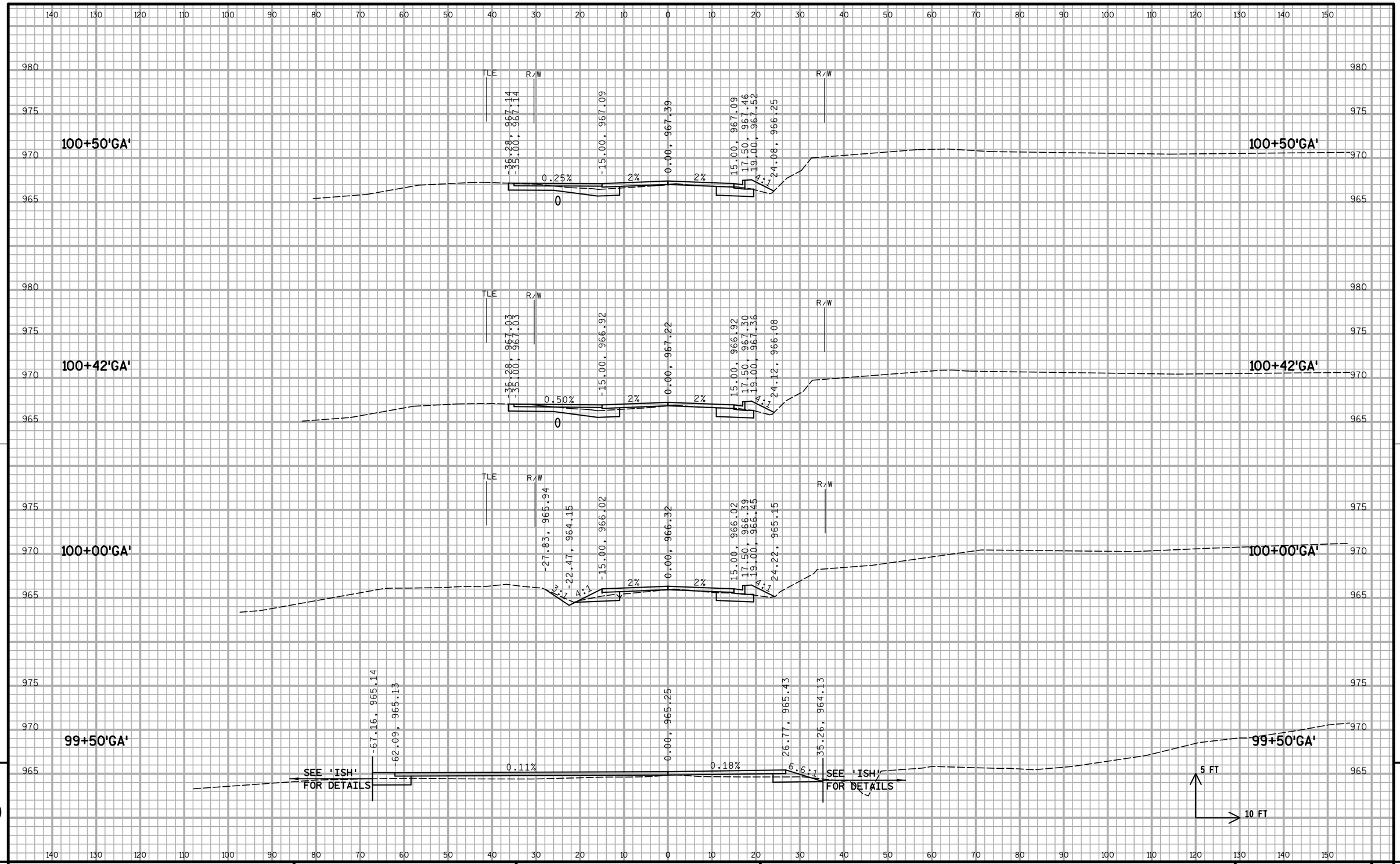

9

9

PROJECT NO: 1674-00-70	HWY: US 12	COUNTY: SAUK	CROSS SECTIONS: GASSER ROAD	SHEET 234	E

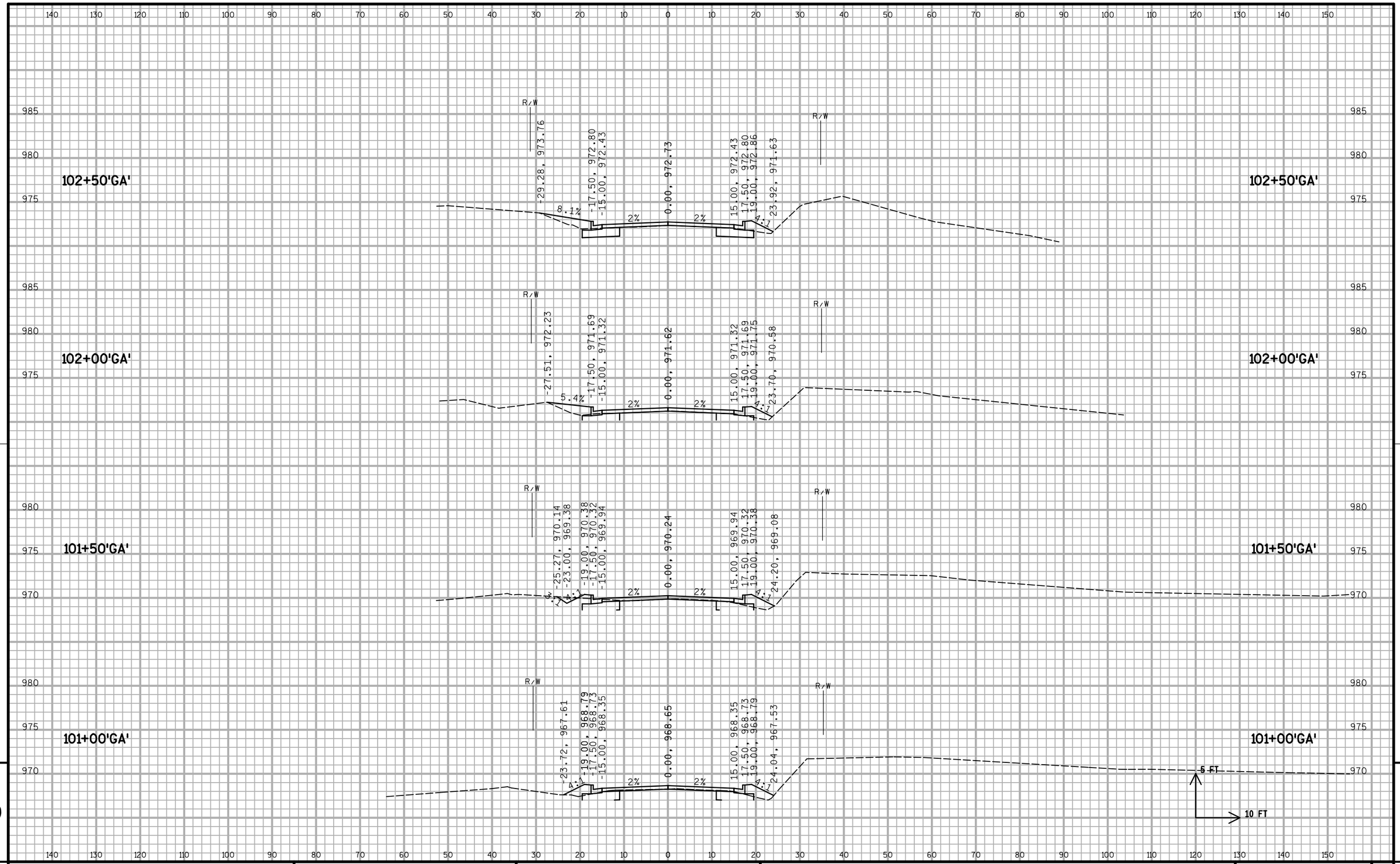

PROJECT NO: 1674-00-70	HWY: US 12	COUNTY: SAUK	CROSS SECTIONS: GASSER ROAD	SHEET 235	E

FILE NAME : S:\MAD\1000--1099\1089\150\Micros\Design\Ishnala Bikepath\Plan\090203_BP_GA_xs_V8.dgn PLOT DATE : 11/26/2013 PLOT BY : _username_ PLOT NAME : PLOT SCALE : $$.....plotscale.....$$ WISDOT/CADDS SHEET 21

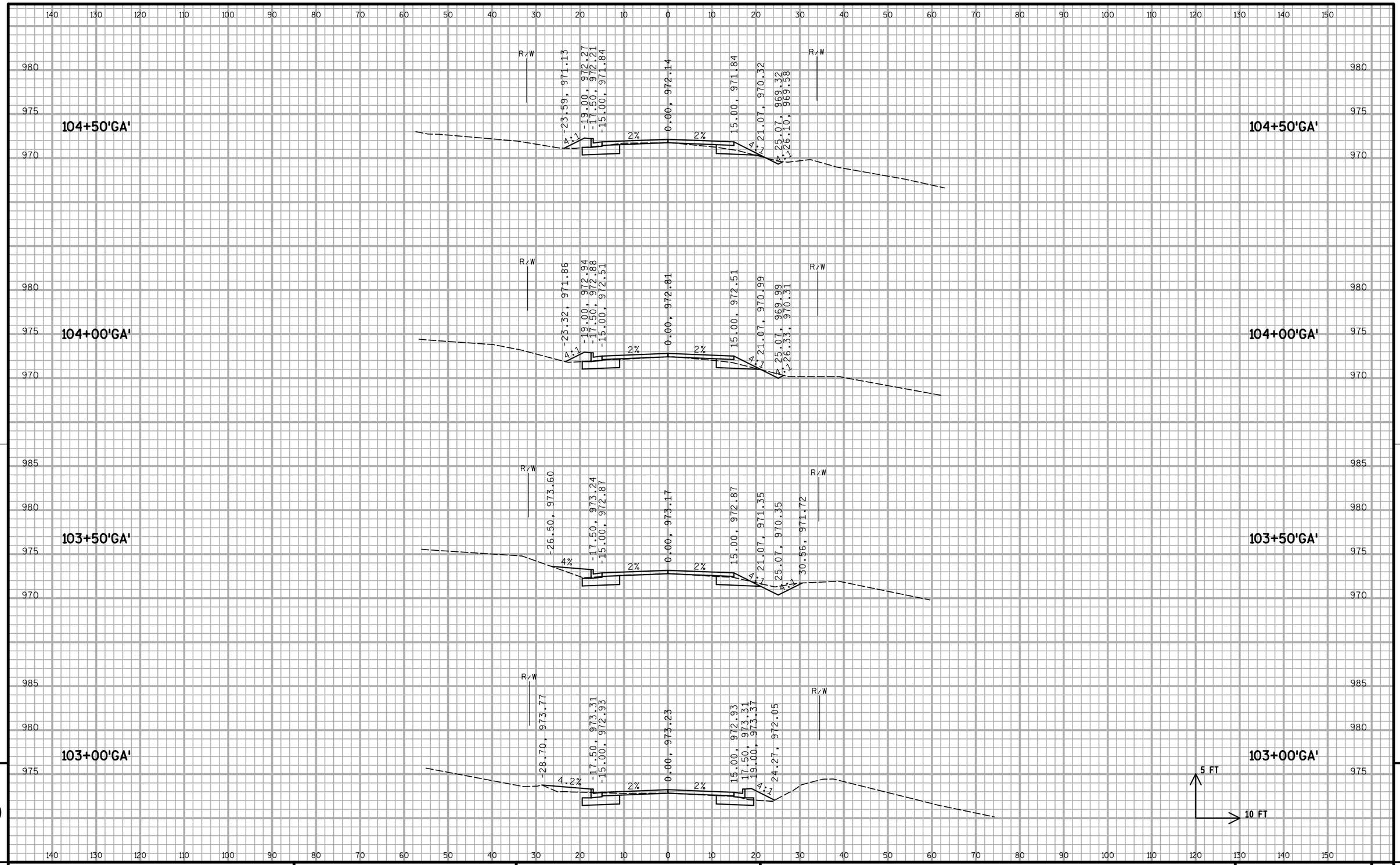

9

9

PROJECT NO: 1674-00-70	HWY: US 12	COUNTY: SAUK	CROSS SECTIONS: GASSER ROAD	SHEET	E

FILE NAME : S:\MAD\1000--1099\1089\150\Micros\Design\Ishnala Bikepath\Plan\090203_BP_GA_xs_V8.dgn PLOT DATE : 11/26/2013 PLOT BY : _username_ PLOT NAME : PLOT SCALE : $$.....plotscale.....$$ WISDOT/CADDS SHEET 21

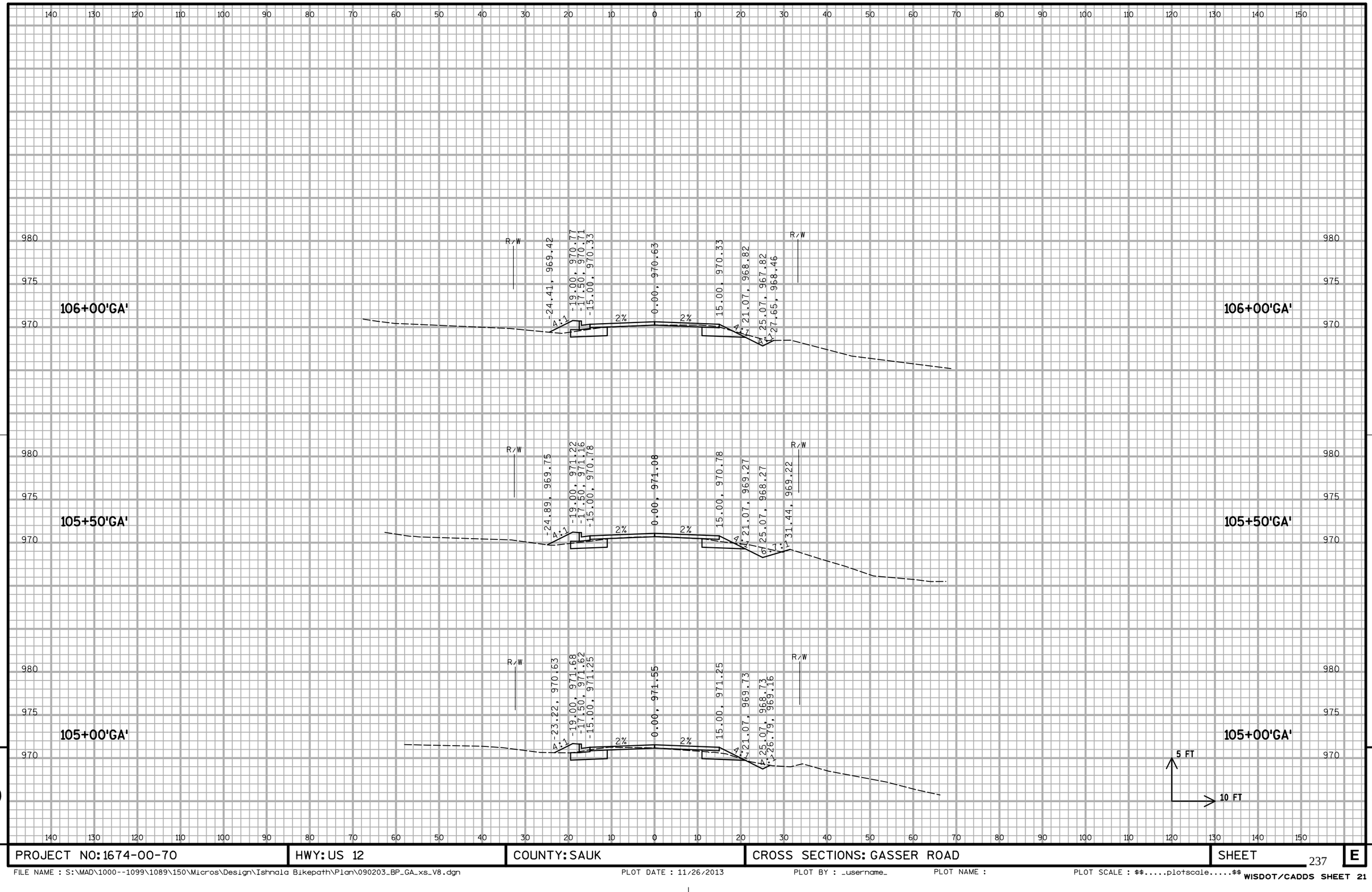

9

9

PROJECT NO: 1674-00-70	HWY: US 12	COUNTY: SAUK	CROSS SECTIONS: GASSER ROAD	SHEET 237	E

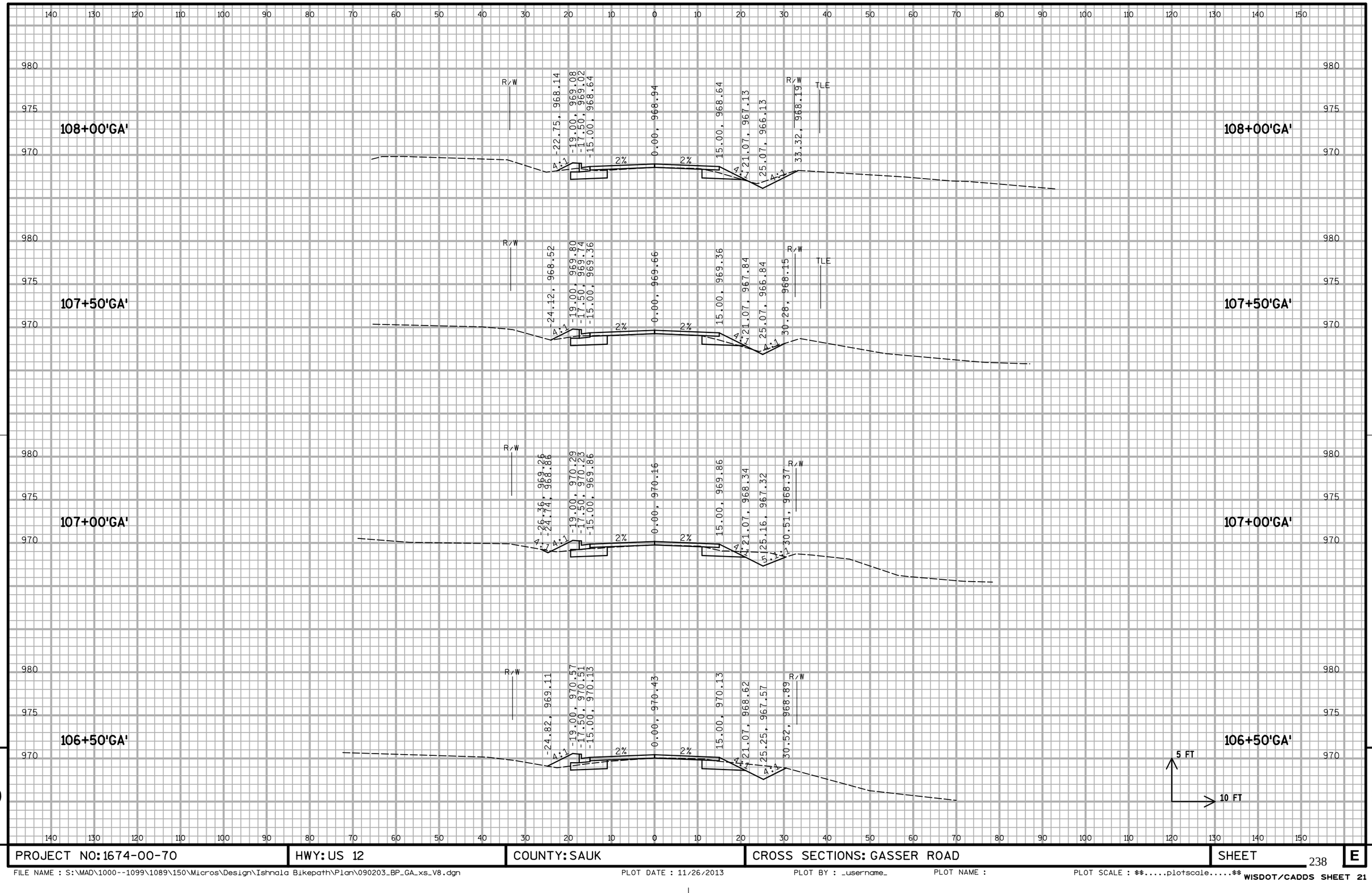

PROJECT NO: 1674-00-70	HWY: US 12	COUNTY: SAUK	CROSS SECTIONS: GASSER ROAD	SHEET 238	E

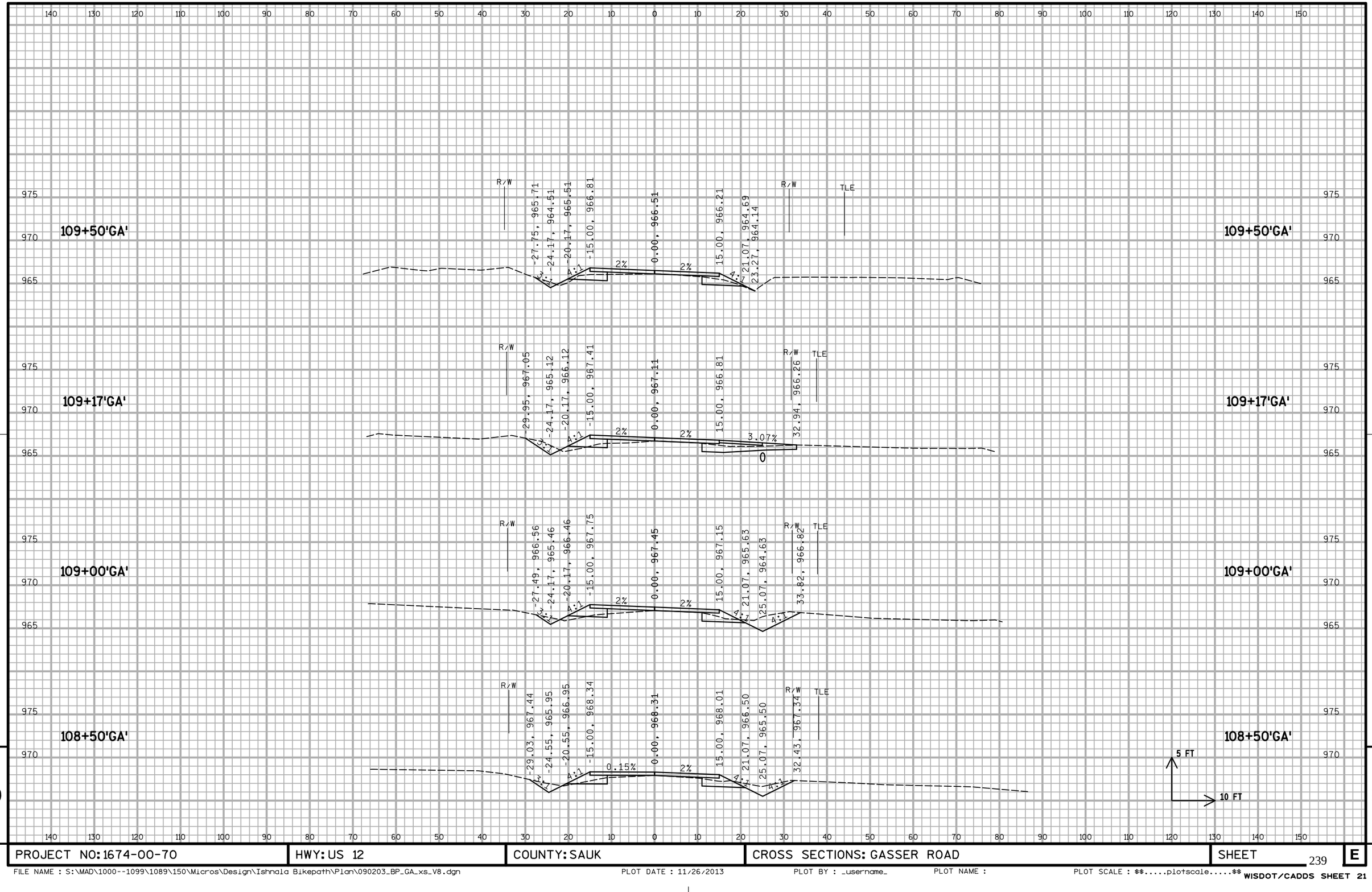

9

9

PROJECT NO: 1674-00-70	HWY: US 12	COUNTY: SAUK	CROSS SECTIONS: GASSER ROAD	SHEET 239	E

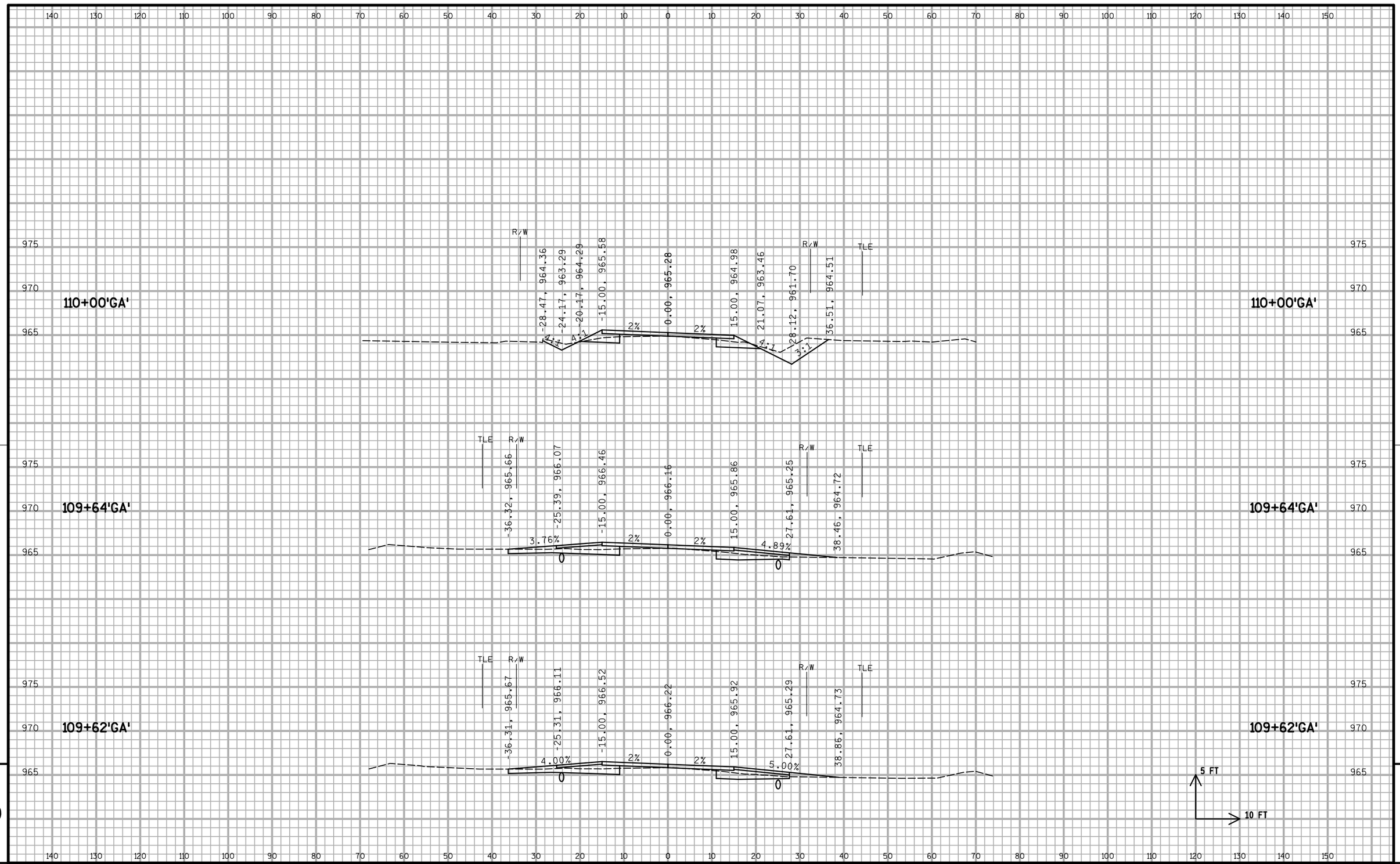

9

9

PROJECT NO: 1674-00-70	HWY: US 12	COUNTY: SAUK	CROSS SECTIONS: GASSER ROAD	SHEET 240	E

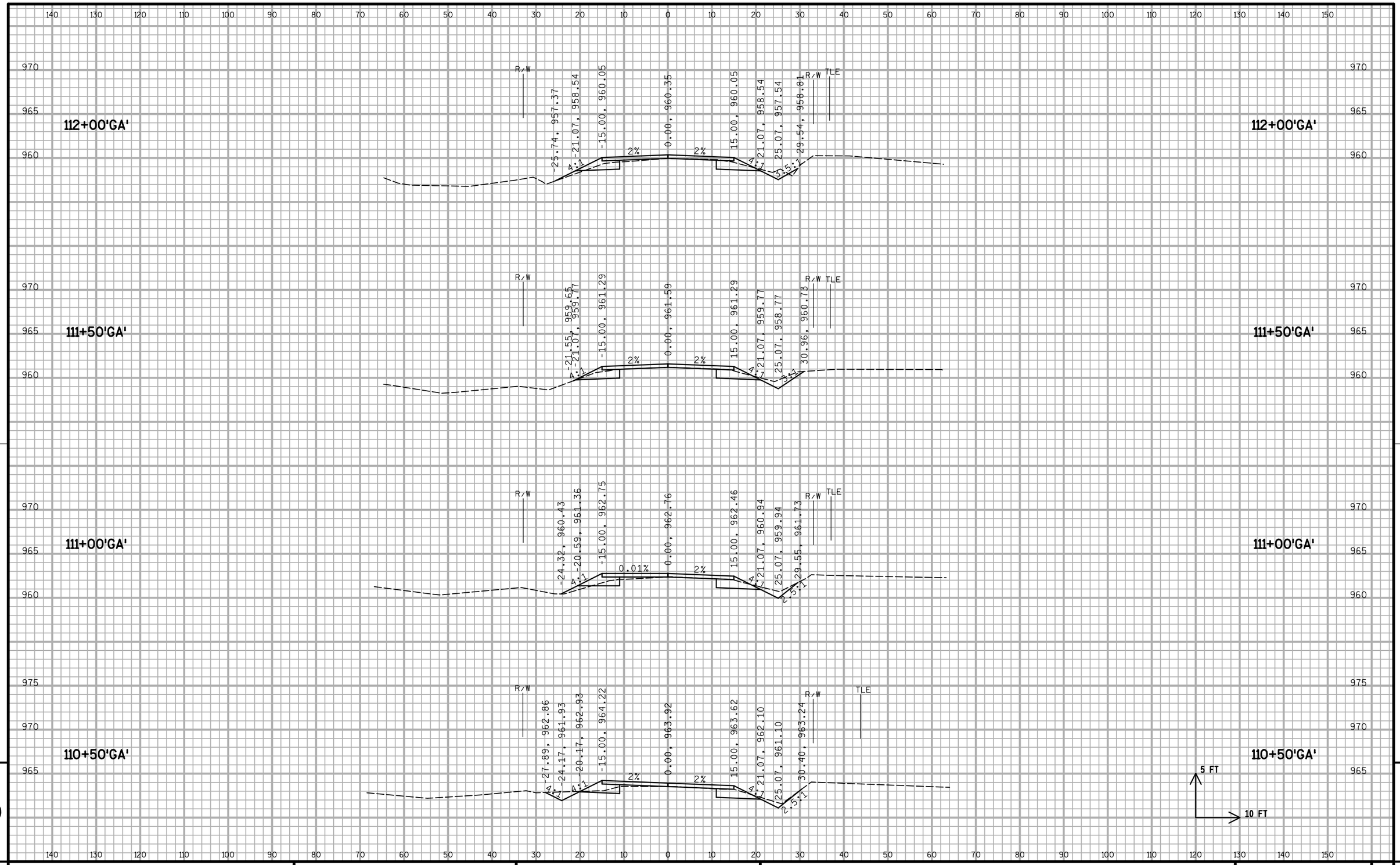

9

9

PROJECT NO:1674-00-70	HWY:US 12	COUNTY:SAUK	CROSS SECTIONS: GASSER ROAD	SHEET 241	E

FILE NAME : S:\MAD\1000--1099\1089\150\Micros\Design\Ishnala Bikepath\Plan\090203_BP_GA_xs_V8.dgn PLOT DATE : 11/26/2013 PLOT BY : _username_ PLOT NAME : PLOT SCALE : $$.....plotscale.....$$ WISDOT/CADDS SHEET 21

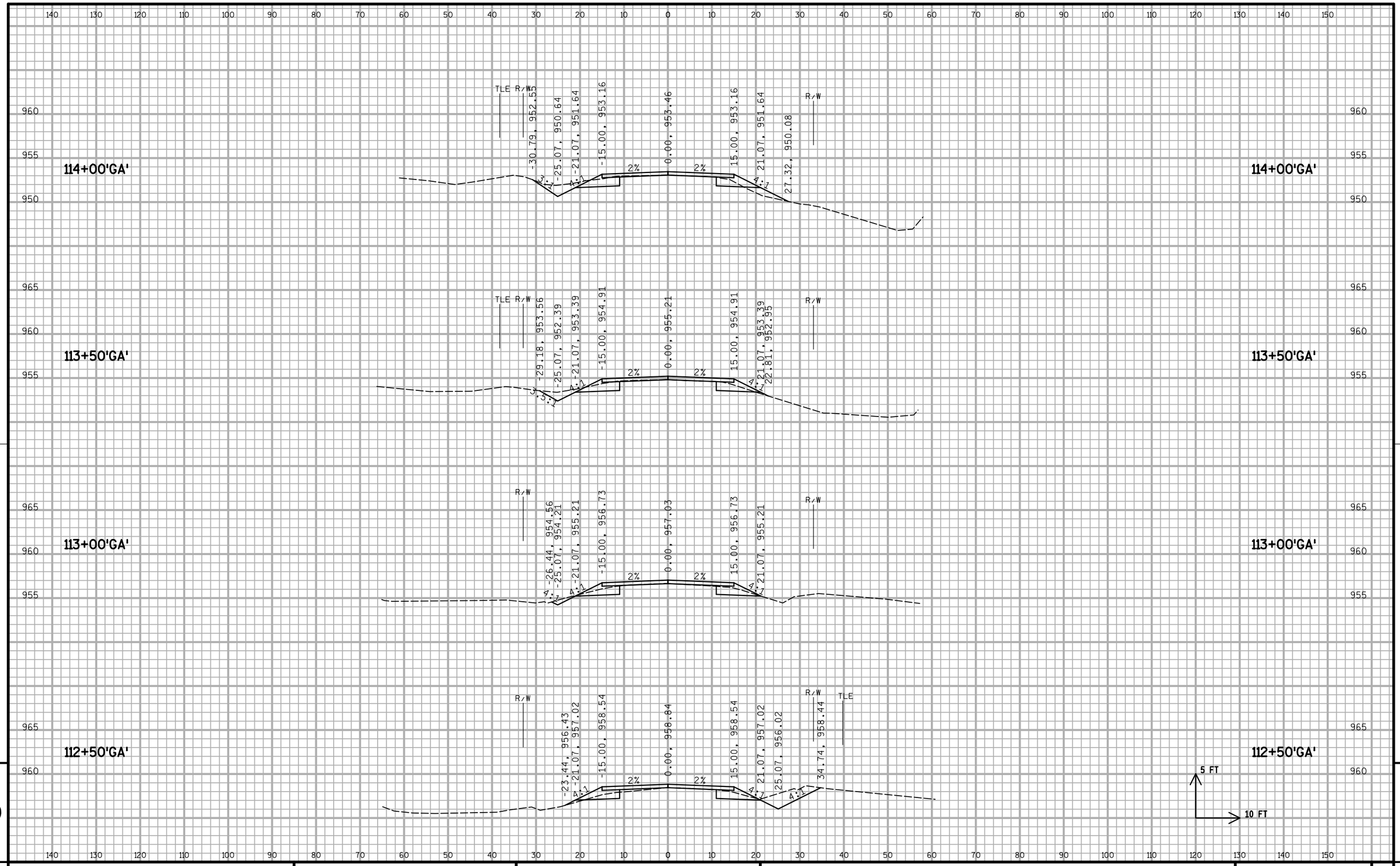

9

9

PROJECT NO: 1674-00-70	HWY: US 12	COUNTY: SAUK	CROSS SECTIONS: GASSER ROAD	SHEET 242	E

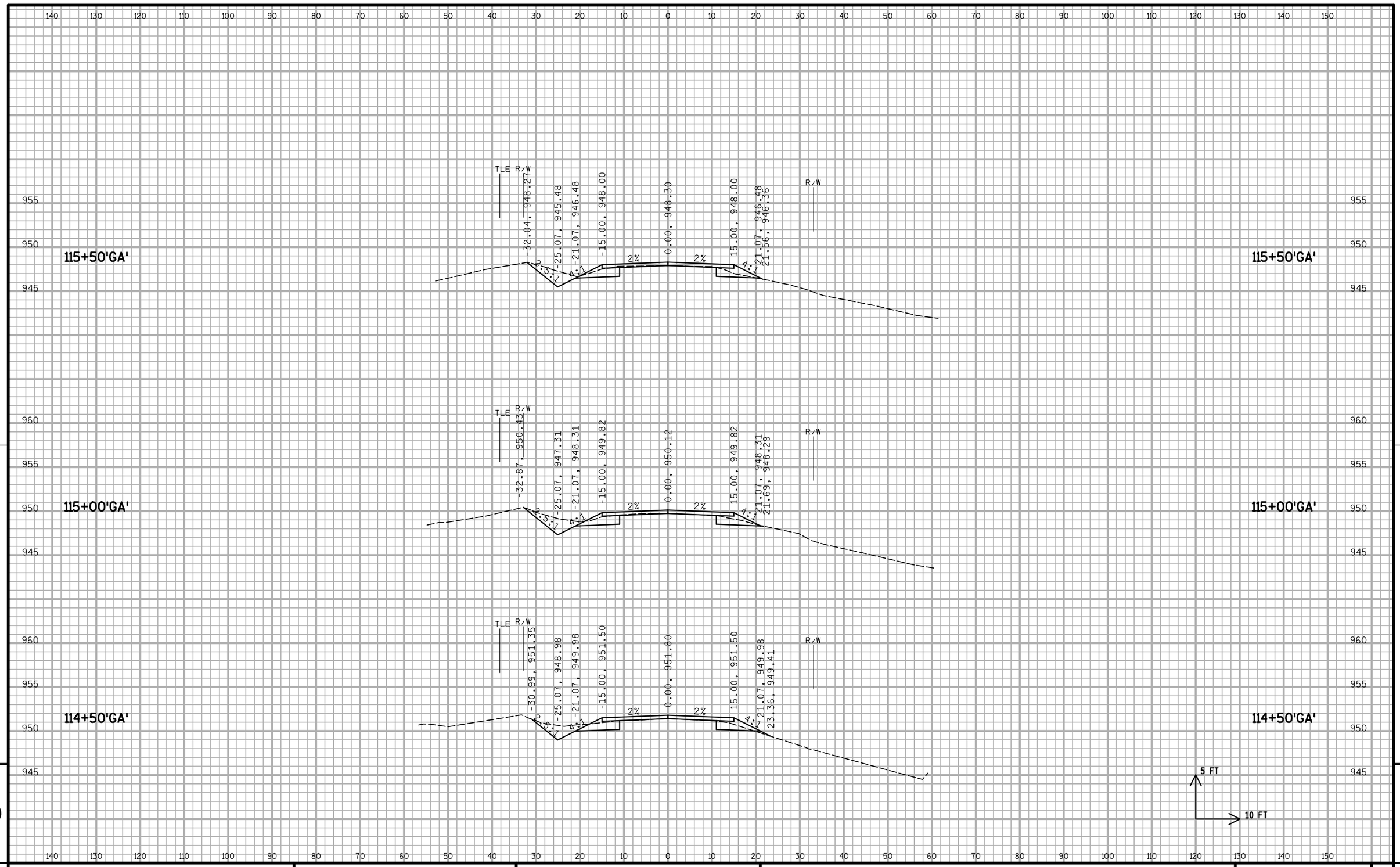

PROJECT NO: 1674-00-70	HWY: US 12	COUNTY: SAUK	CROSS SECTIONS: GASSER ROAD	SHEET 243	E

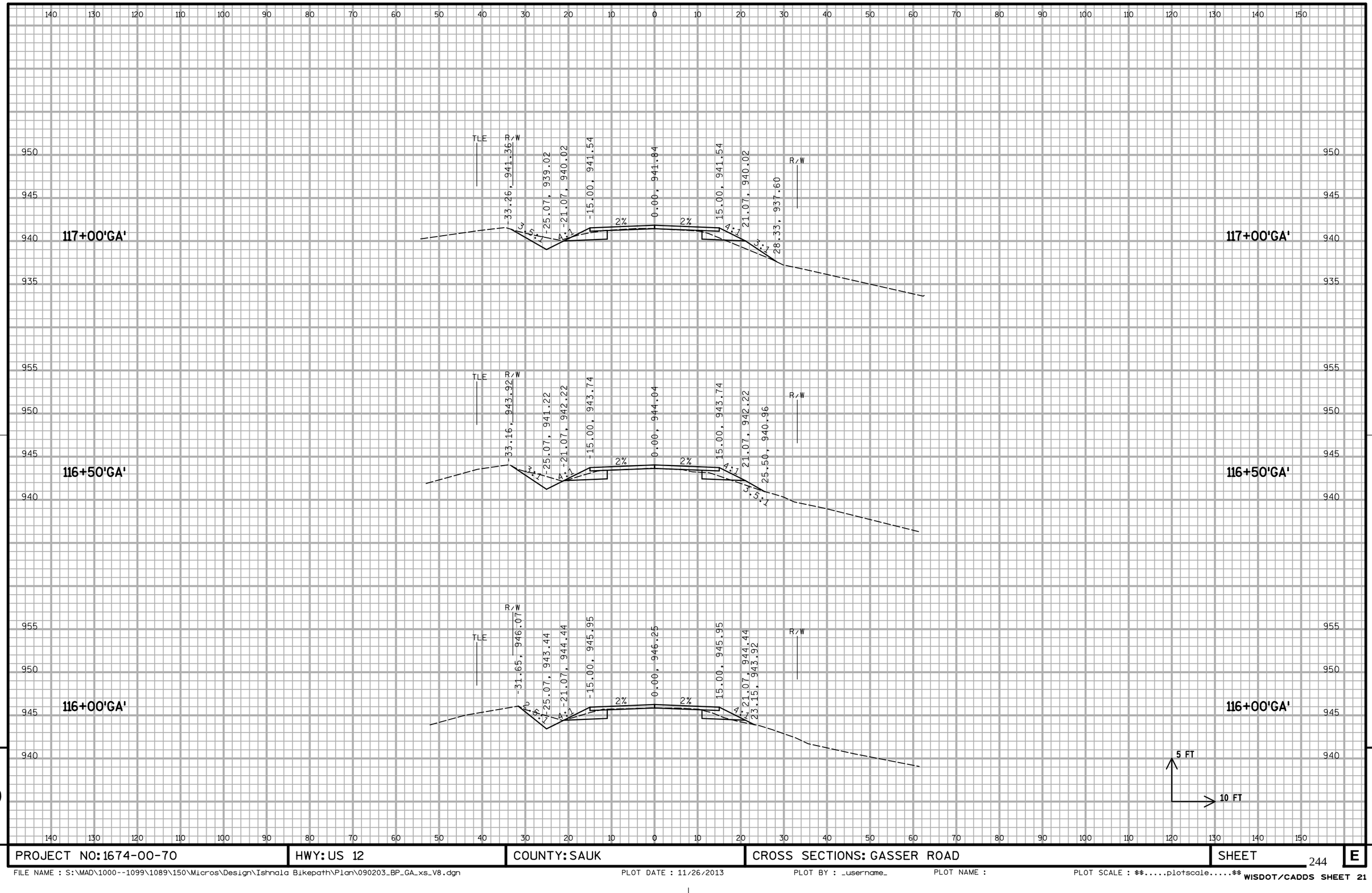

PROJECT NO: 1674-00-70	HWY: US 12	COUNTY: SAUK	CROSS SECTIONS: GASSER ROAD	SHEET 244	E

FILE NAME : S:\MAD\1000--1099\1089\150\Micros\Design\Ishnala Bikepath\Plan\090203_BP_GA_xs_V8.dgn PLOT DATE : 11/26/2013 PLOT BY : _username_ PLOT NAME : PLOT SCALE : $$.....plotscale.....$$

WISDOT/CADDS SHEET 21

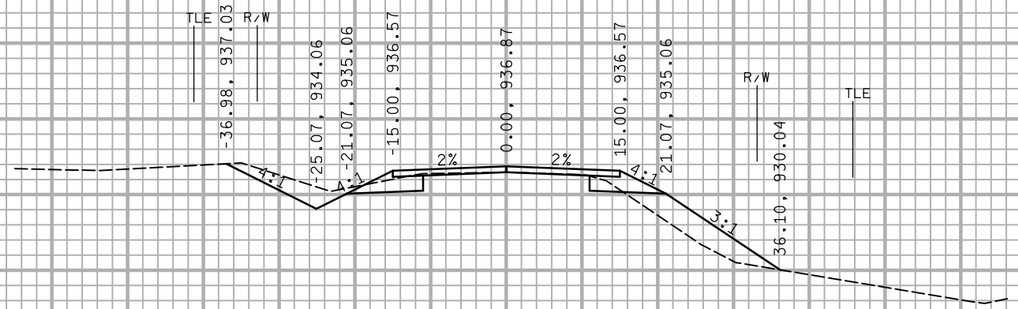

118+50'GA'

118+50'GA'

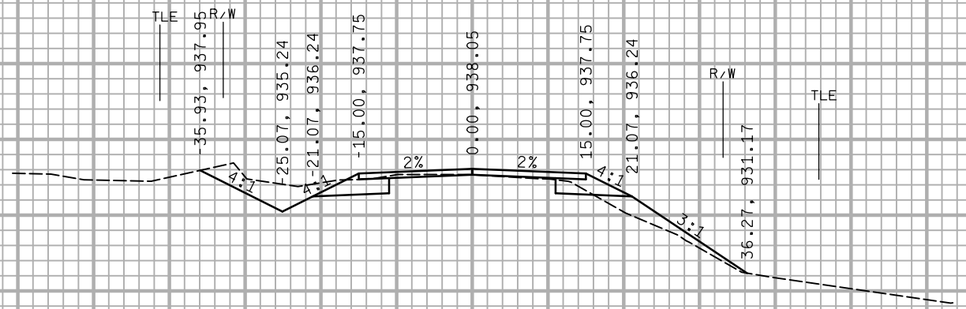

118+00'GA'

118+00'GA'

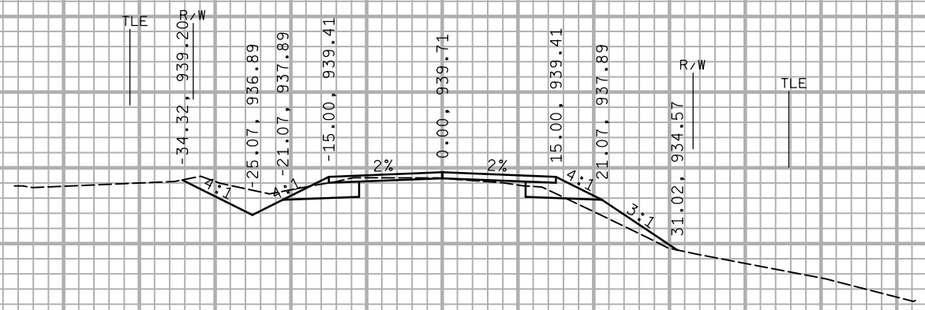

117+50'GA'

117+50'GA'

5 FT

10 FT

9

9

PROJECT NO: 1674-00-70	HWY: US 12	COUNTY: SAUK	CROSS SECTIONS: GASSER ROAD	SHEET 245	E

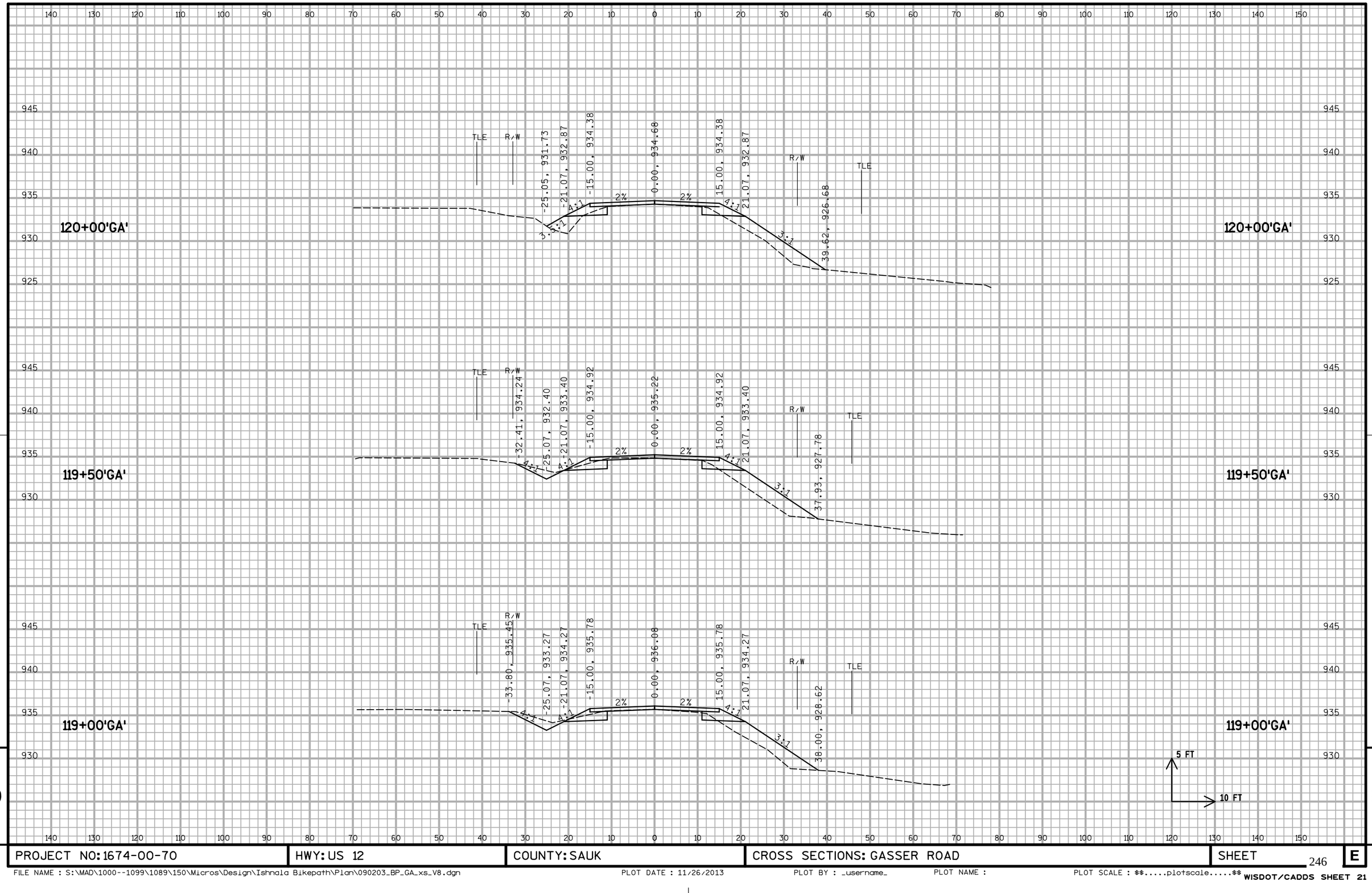

PROJECT NO: 1674-00-70	HWY: US 12	COUNTY: SAUK	CROSS SECTIONS: GASSER ROAD	SHEET 246	E

FILE NAME : S:\MAD\1000--1099\1089\150\Micros\Design\Ishnala Bikepath\Plan\090203_BP_GA_xs_V8.dgn PLOT DATE : 11/26/2013 PLOT BY : _username_ PLOT NAME : PLOT SCALE : $$.....plotscale.....$$ WISDOT/CADDS SHEET 21

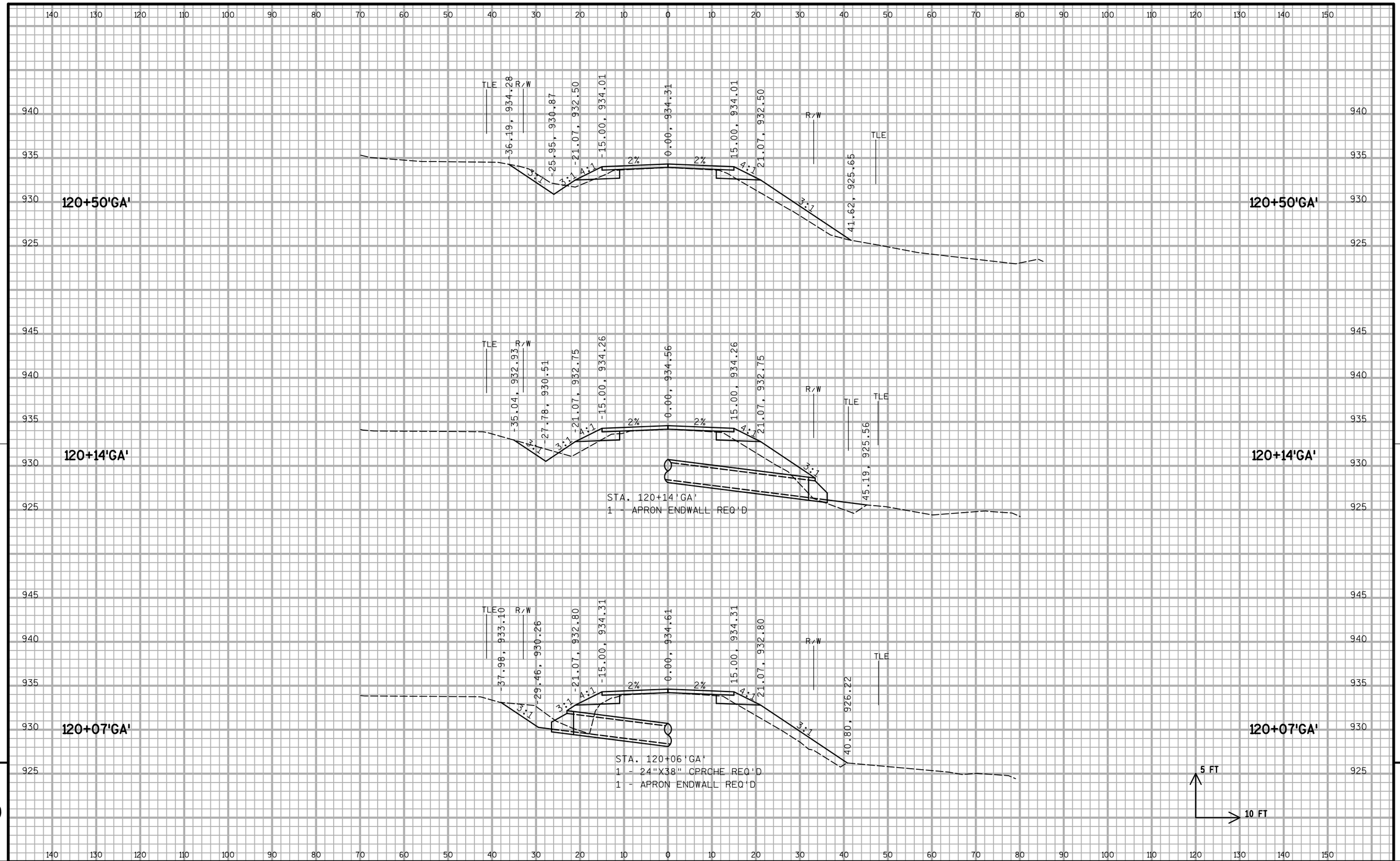
120+50'GA'
TLE
R/W
-36.19, 934.28
-25.95, 930.87
-21.07, 932.50
-15.00, 934.01
0.00, 934.31
15.00, 934.01
21.07, 932.50
41.62, 925.65
3:1
4:1
2%
120+14'GA'
-35.04, 932.93
-27.78, 930.51
-21.07, 932.75
-15.00, 934.26
0.00, 934.56
15.00, 934.26
21.07, 932.75
45.19, 925.56
STA. 120+14'GA'
1 - APRON ENDWALL REQ'D
120+07'GA'
-37.98, 933.10
-29.46, 930.26
-21.07, 932.80
-15.00, 934.31
0.00, 934.61
15.00, 934.31
21.07, 932.80
40.80, 926.22
STA. 120+06'GA'
1 - 24"X38" CPRCHE REQ'D
1 - APRON ENDWALL REQ'D
5 FT
10 FT

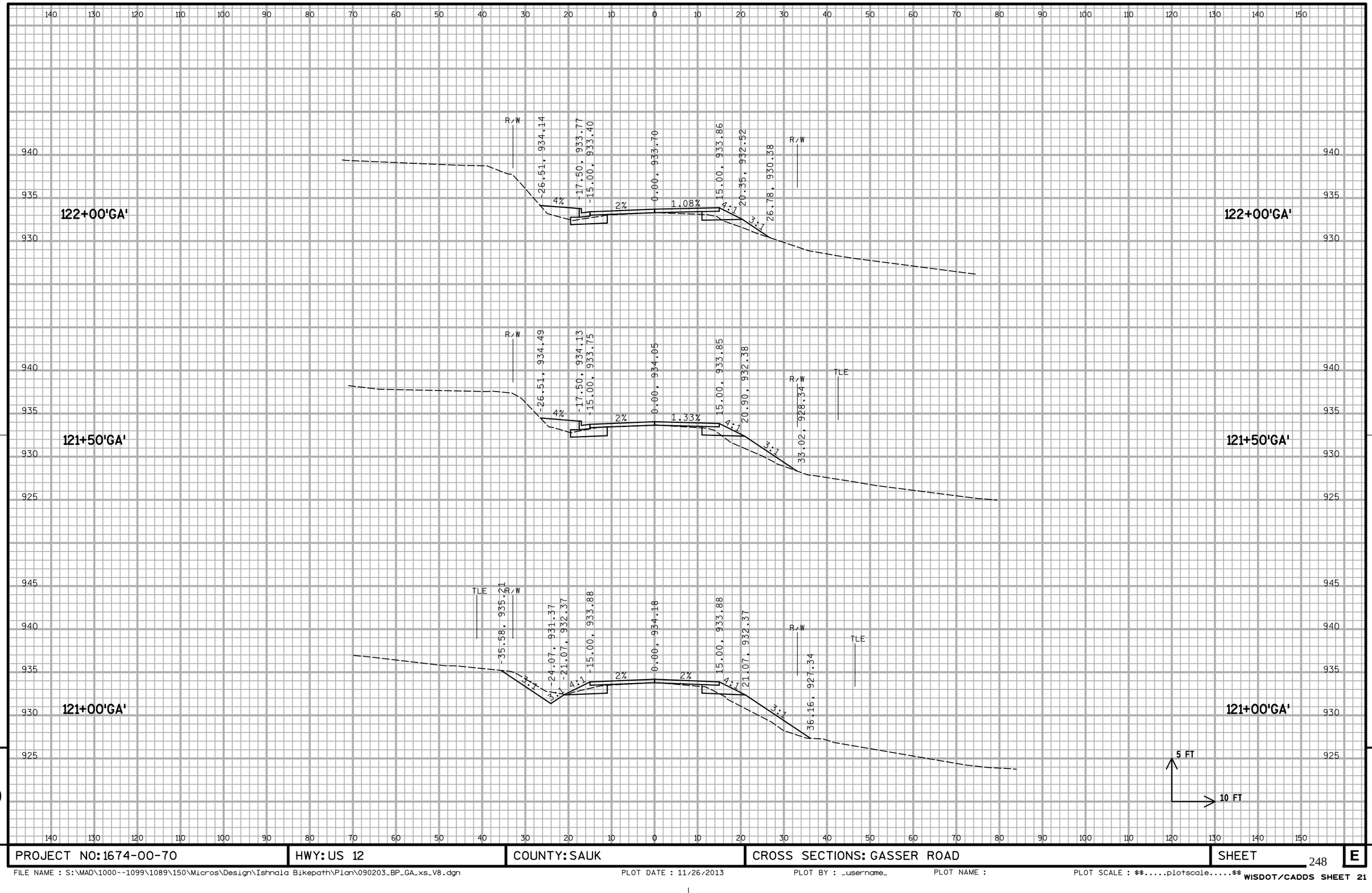

9

9

PROJECT NO: 1674-00-70	HWY: US 12	COUNTY: SAUK	CROSS SECTIONS: GASSER ROAD	SHEET 248	E

FILE NAME : S:\MAD\1000--1099\1089\150\Micros\Design\Ishnala Bikepath\Plan\090203_BP_GA_xs_V8.dgn PLOT DATE : 11/26/2013 PLOT BY : _username_ PLOT NAME : PLOT SCALE : $$.....plotscale.....$$ WISDOT/CADDS SHEET 21

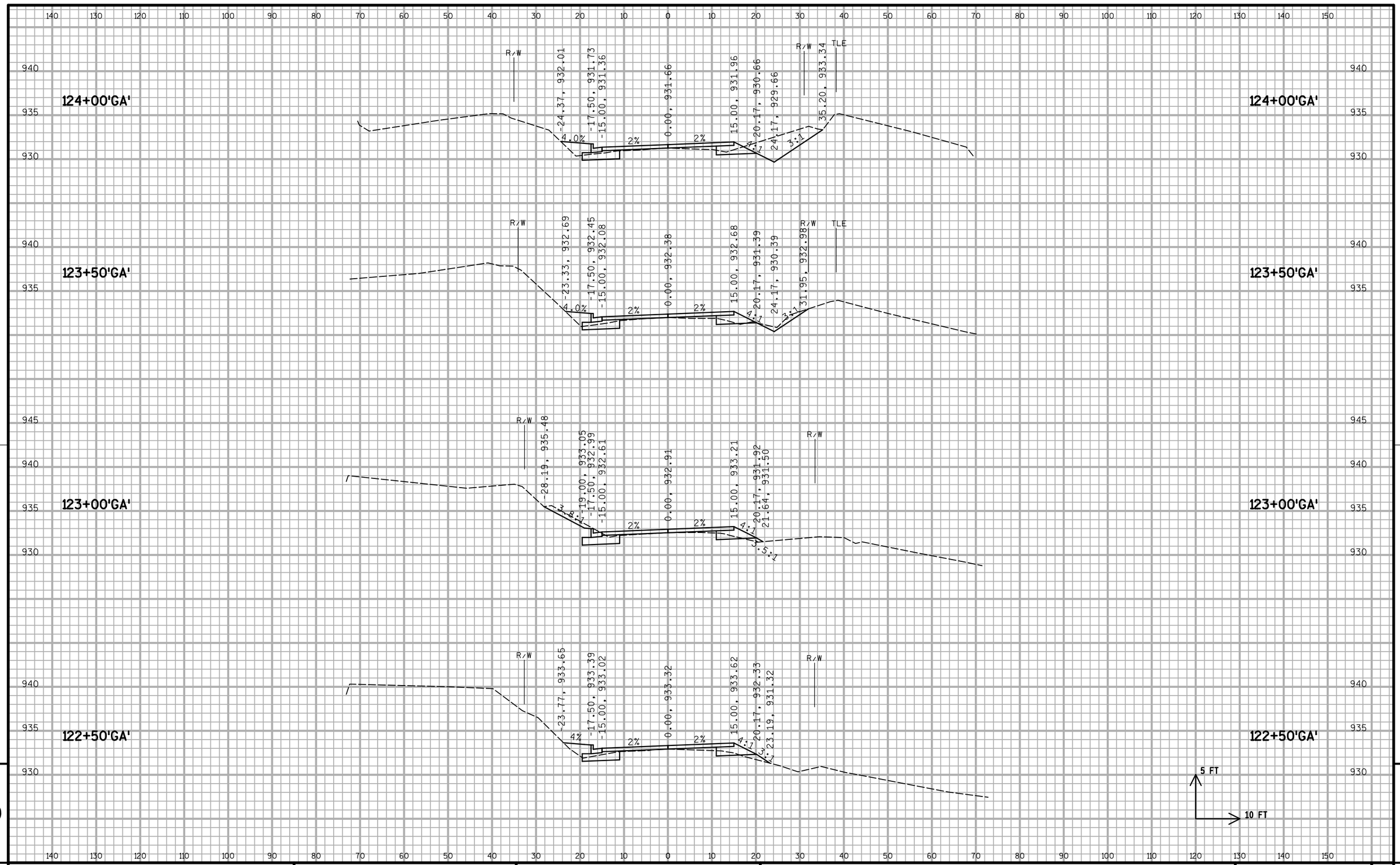

9

9

PROJECT NO: 1674-00-70	HWY: US 12	COUNTY: SAUK	CROSS SECTIONS: GASSER ROAD	SHEET 249	E

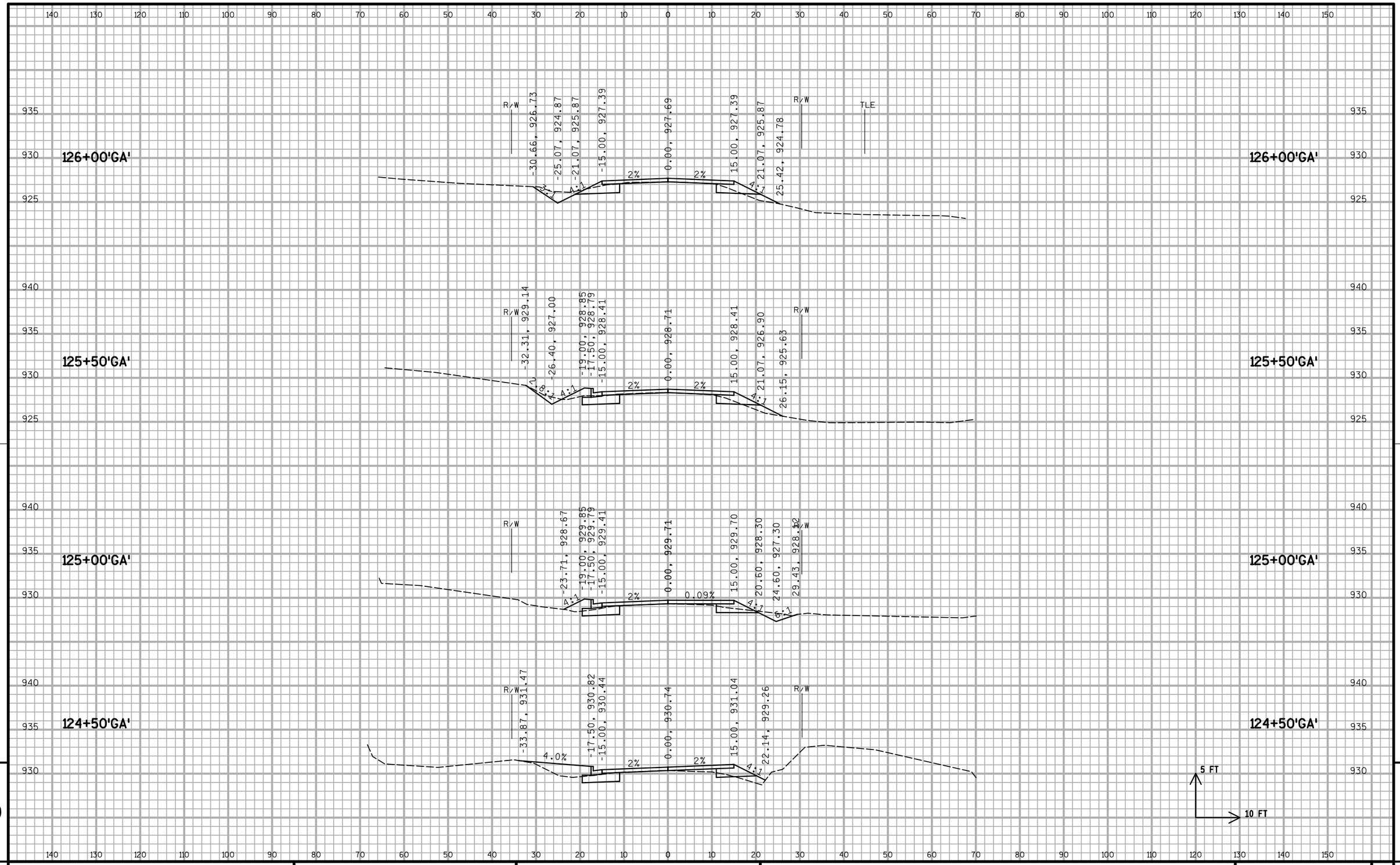

9

9

PROJECT NO: 1674-00-70	HWY: US 12	COUNTY: SAUK	CROSS SECTIONS: GASSER ROAD	SHEET 250	E

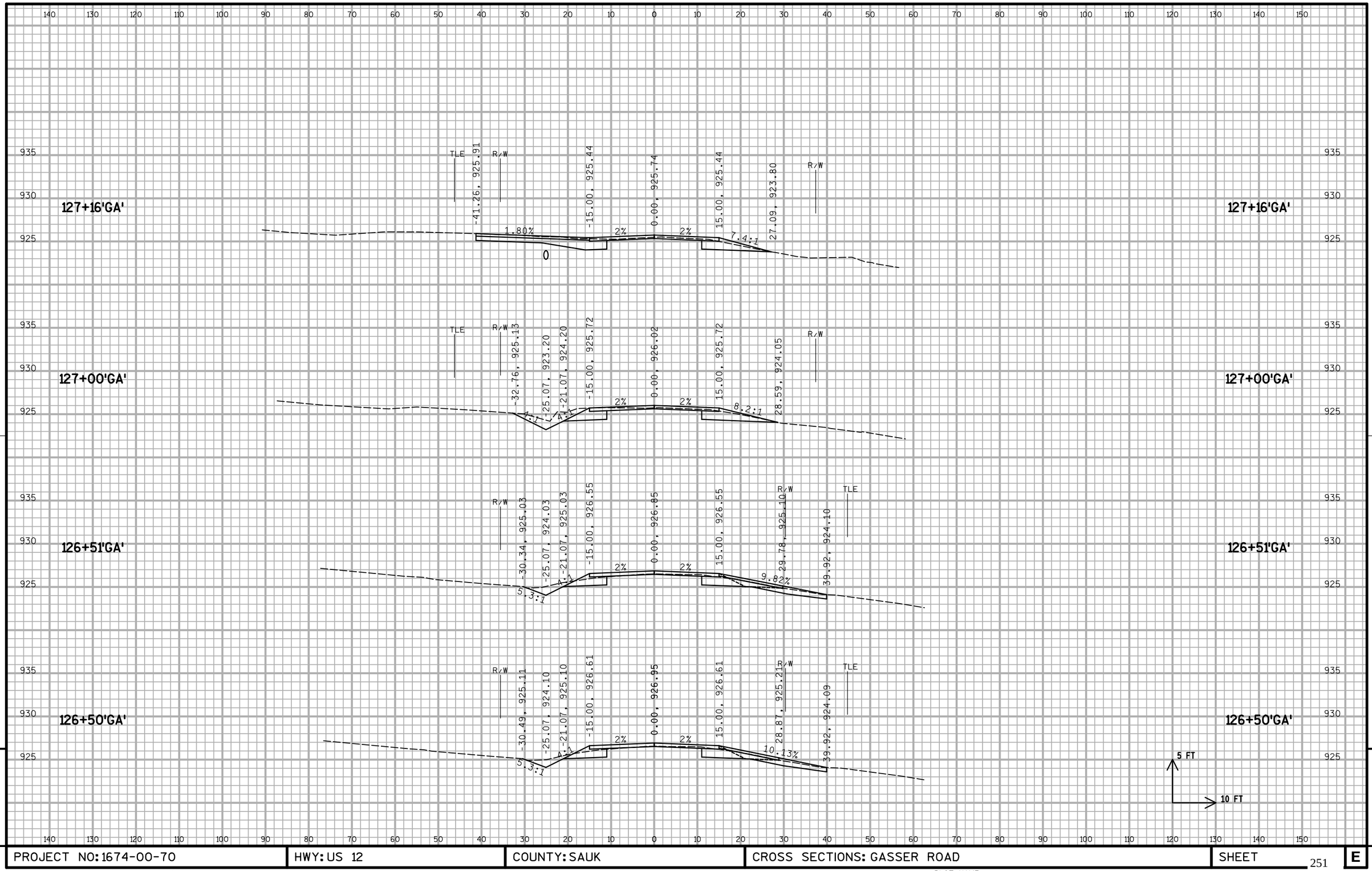

9

9

PROJECT NO: 1674-00-70	HWY: US 12	COUNTY: SAUK	CROSS SECTIONS: GASSER ROAD	SHEET 251	E

FILE NAME : S:\MAD\1000--1099\1089\150\Micros\Design\Ishnala Bikepath\Plan\090203_BP_GA_xs_V8.dgn PLOT DATE : 11/26/2013 PLOT BY : _username_ PLOT NAME : PLOT SCALE : $$.....plotscale.....$$ WISDOT/CADDS SHEET 21

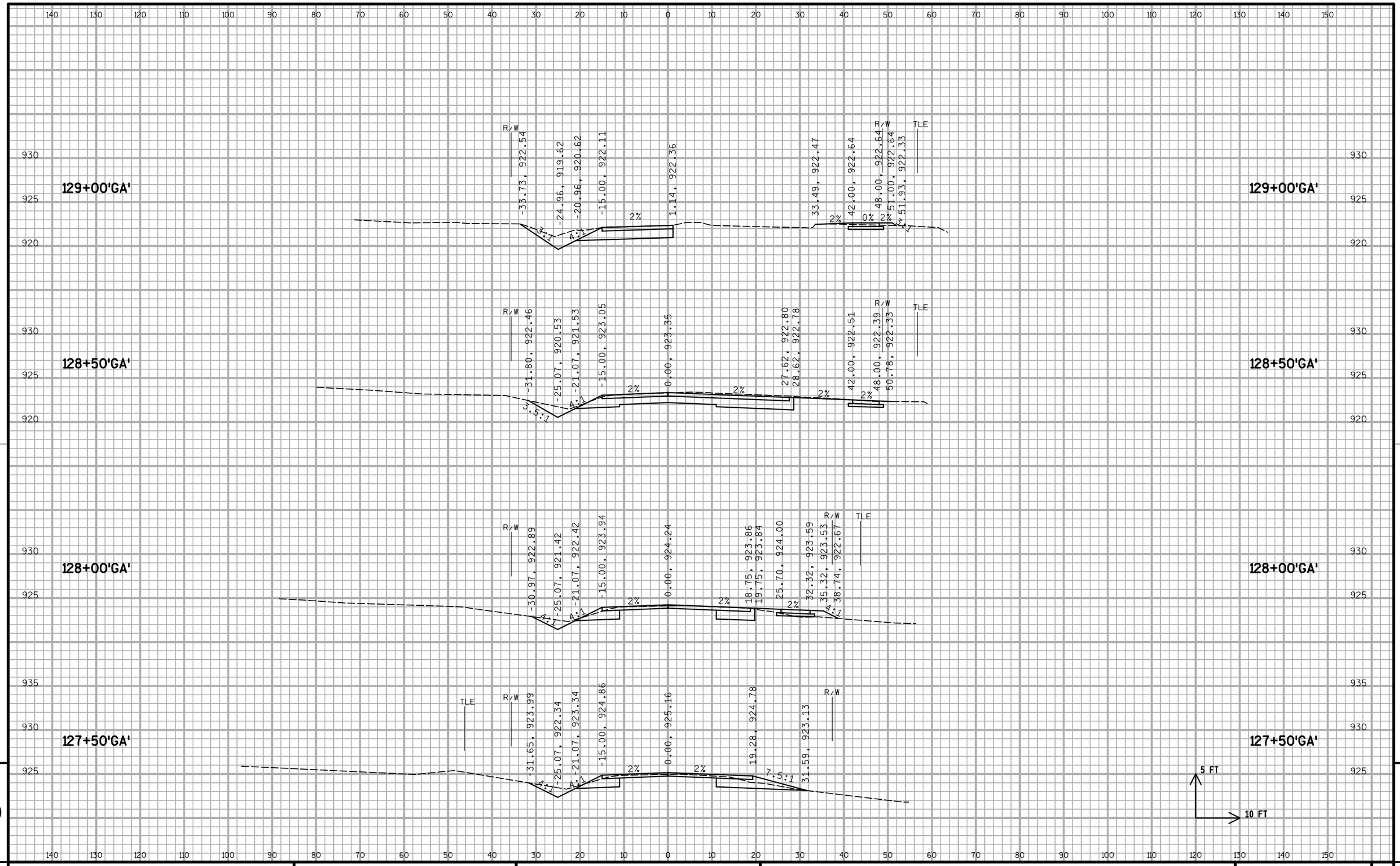

9

9

PROJECT NO: 1674-00-70	HWY: US 12	COUNTY: SAUK	CROSS SECTIONS: GASSER ROAD	SHEET 252	E

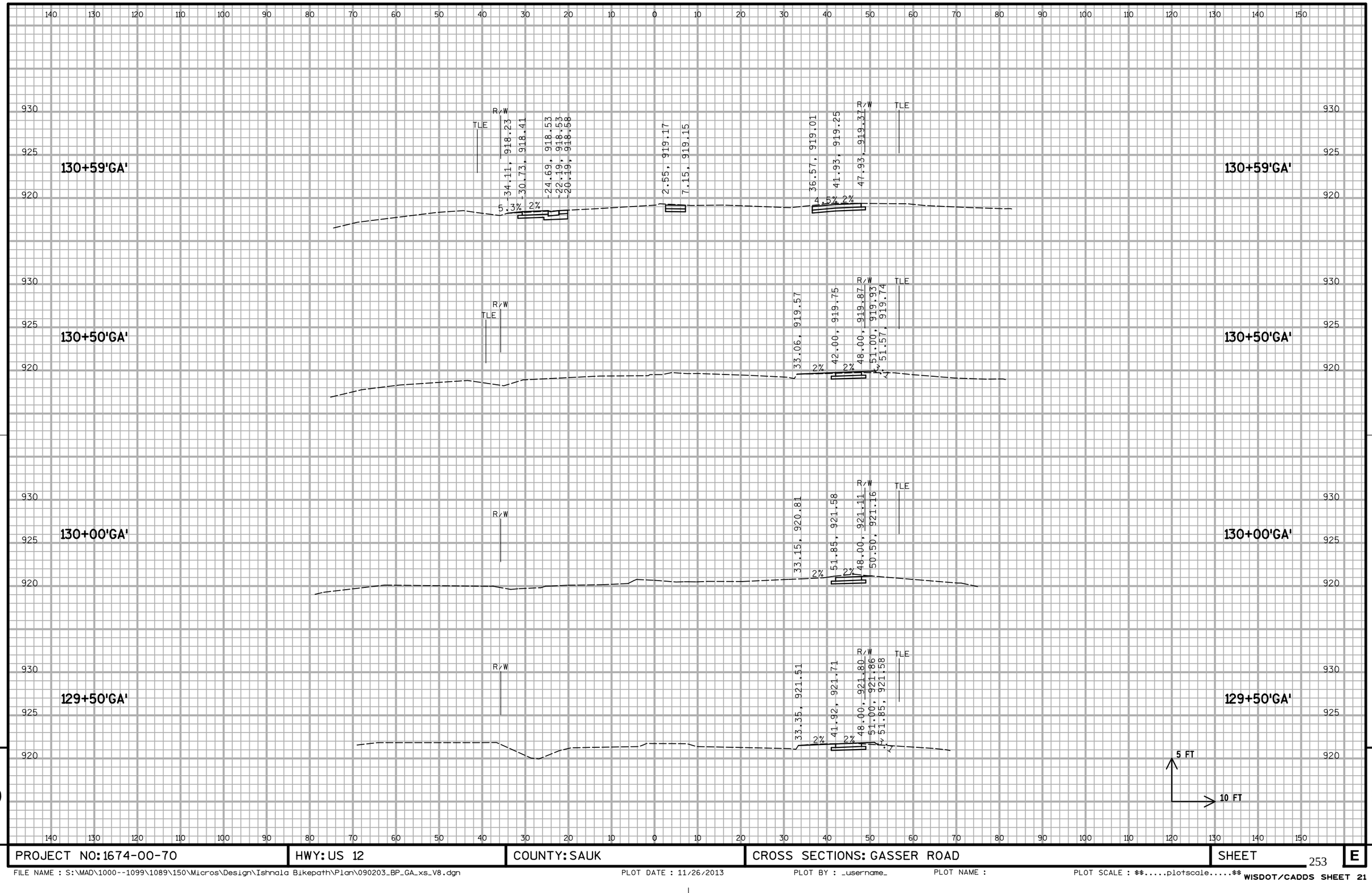

9

9

PROJECT NO: 1674-00-70	HWY: US 12	COUNTY: SAUK	CROSS SECTIONS: GASSER ROAD	SHEET 253	E

FILE NAME : S:\MAD\1000--1099\1089\150\Micros\Design\Ishnala Bikepath\Plan\090203_BP_GA_xs_V8.dgn PLOT DATE : 11/26/2013 PLOT BY : _username_ PLOT NAME : PLOT SCALE : $$.....plotscale.....$$ WISDOT/CADDS SHEET 21

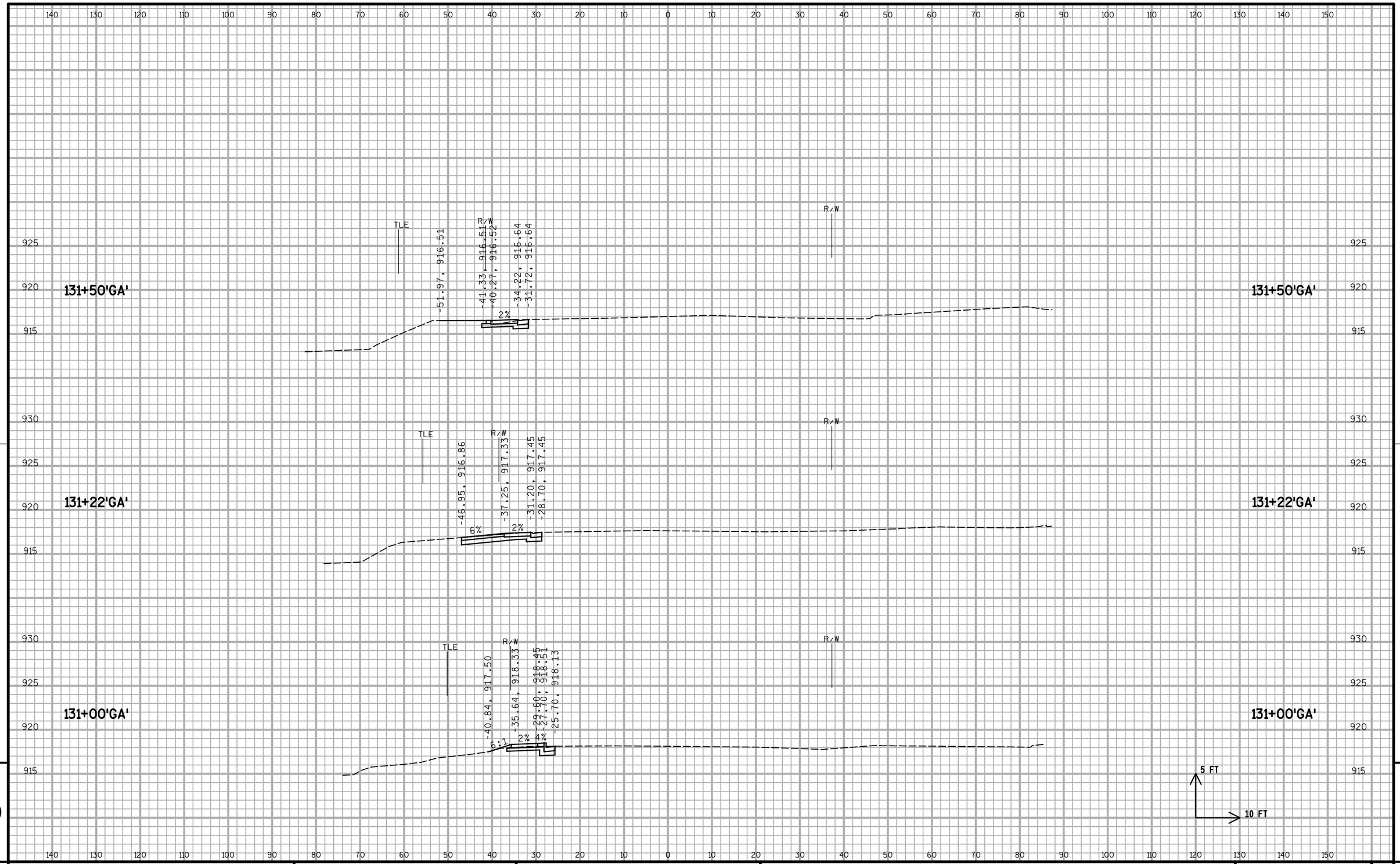

9

9

PROJECT NO: 1674-00-70	HWY: US 12	COUNTY: SAUK	CROSS SECTIONS: GASSER ROAD	SHEET 254	E

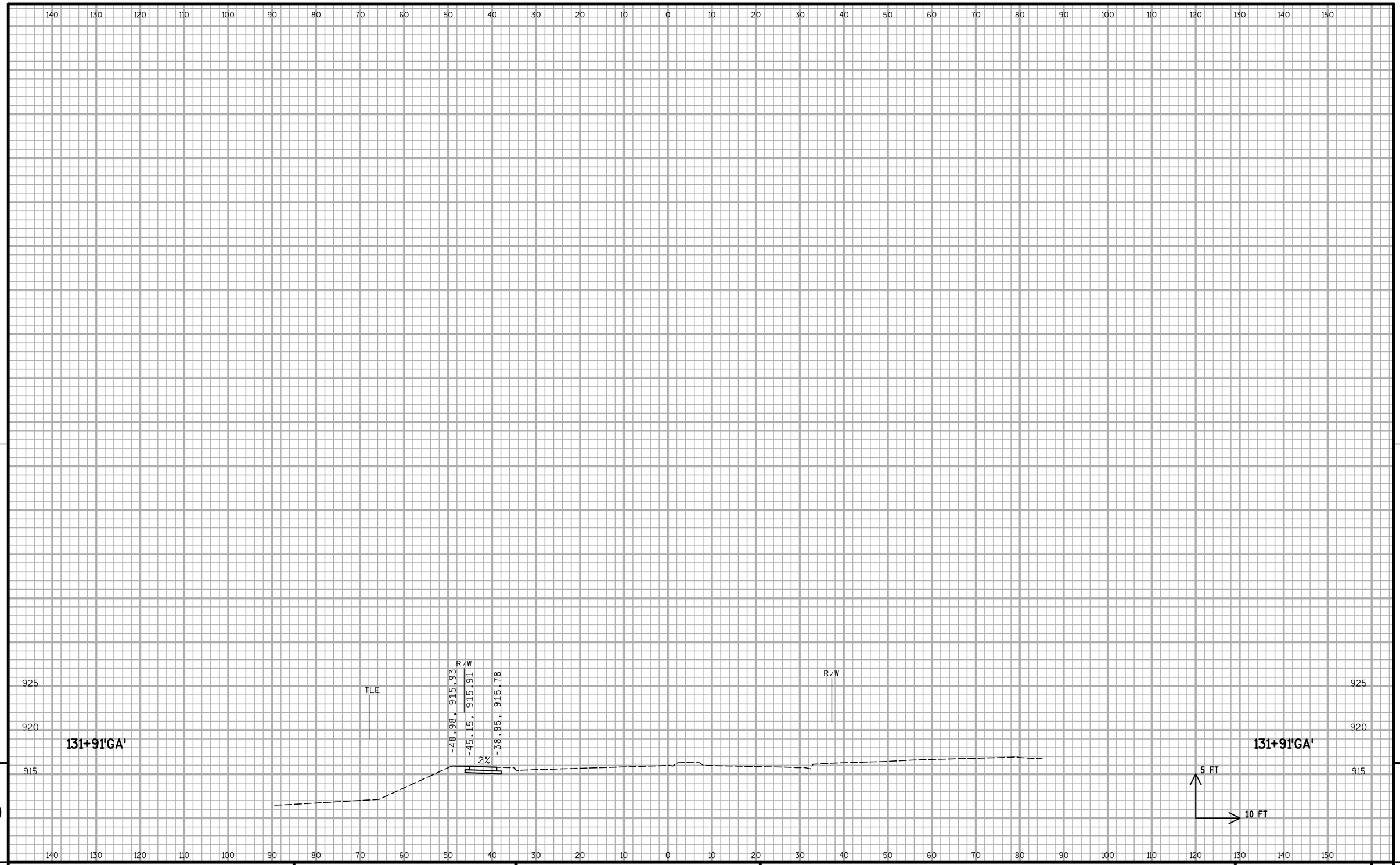

9

9

PROJECT NO: 1674-00-70	HWY: US 12	COUNTY: SAUK	CROSS SECTIONS: GASSER ROAD	SHEET 255	E

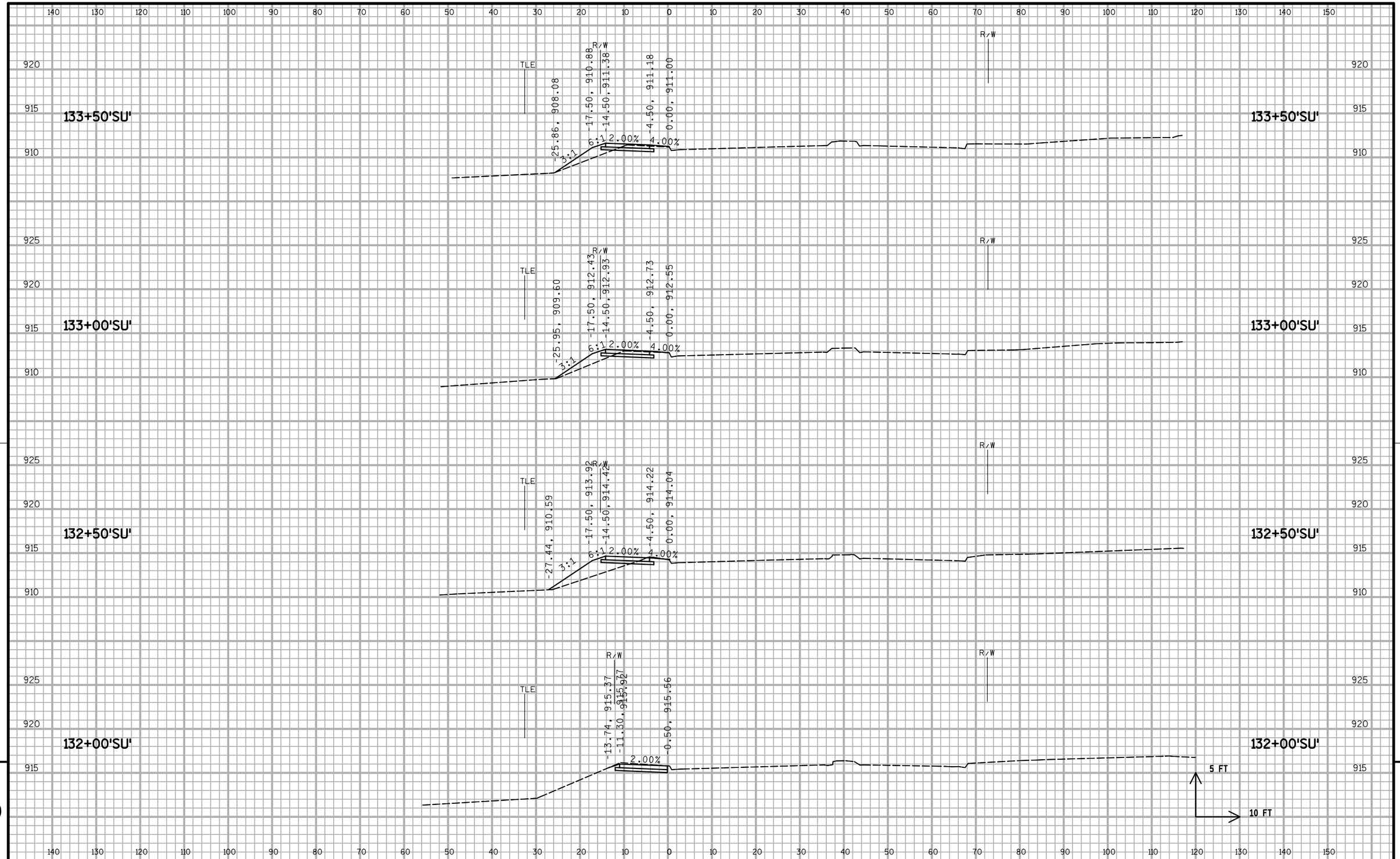

PROJECT NO: 1674-00-70	HWY: US 12	COUNTY: SAUK	CROSS SECTIONS: BIKE PATH - SHARED USE PATH	SHEET 256	E

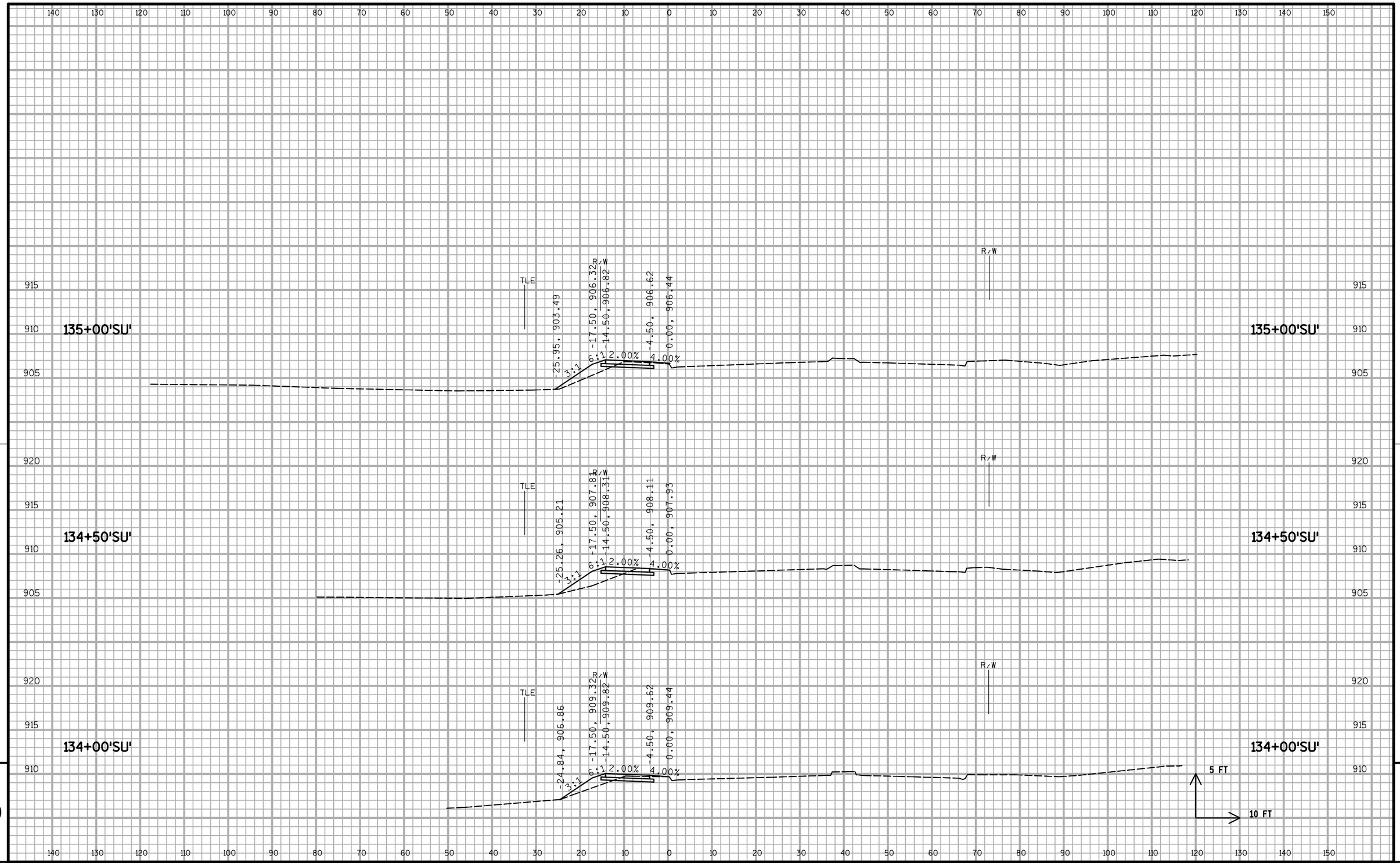

9

9

PROJECT NO: 1674-00-70	HWY: US 12	COUNTY: SAUK	CROSS SECTIONS: BIKE PATH - SHARED USE PATH	SHEET 257	E

FILE NAME : S:\MAD\1000--1099\1089\150\Micros\Design\Ishnala Bikepath\Plan\090204_BP_SU_xs.dgn PLOT DATE : 11/26/2013 PLOT BY : _username_ PLOT NAME : PLOT SCALE : $$.....plotscale.....$$ WISDOT/CADDS SHEET 21

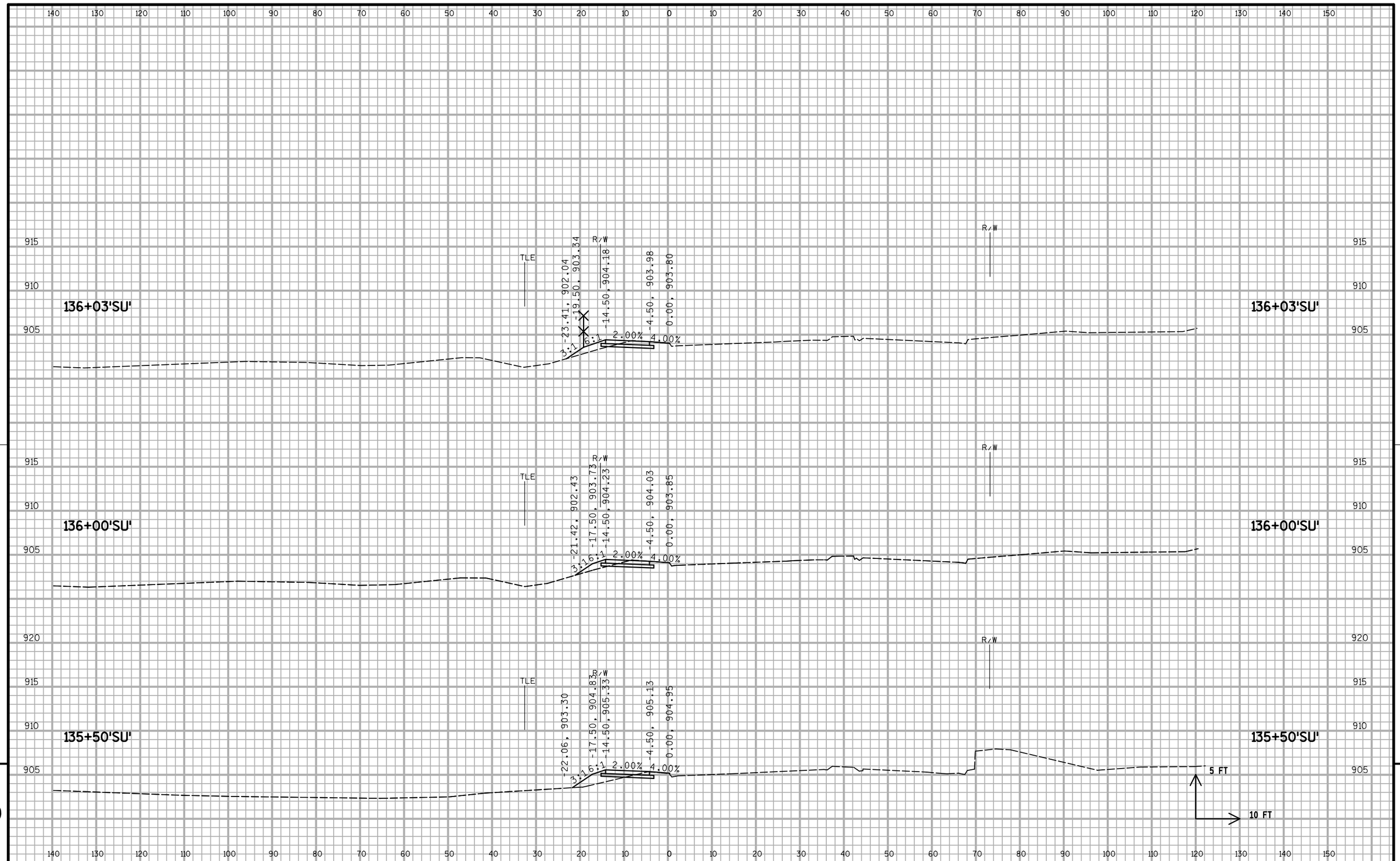

PROJECT NO: 1674-00-70	HWY: US 12	COUNTY: SAUK	CROSS SECTIONS: BIKE PATH - SHARED USE PATH	SHEET 258	E

FILE NAME : S:\MAD\1000--1099\1089\150\Micros\Design\Ishnala Bikepath\Plan\090204_BP_SU_xs.dgn PLOT DATE : 11/26/2013 PLOT BY : _username_ PLOT NAME : PLOT SCALE : $$.....plotscale.....$$ WISDOT/CADDS SHEET 21

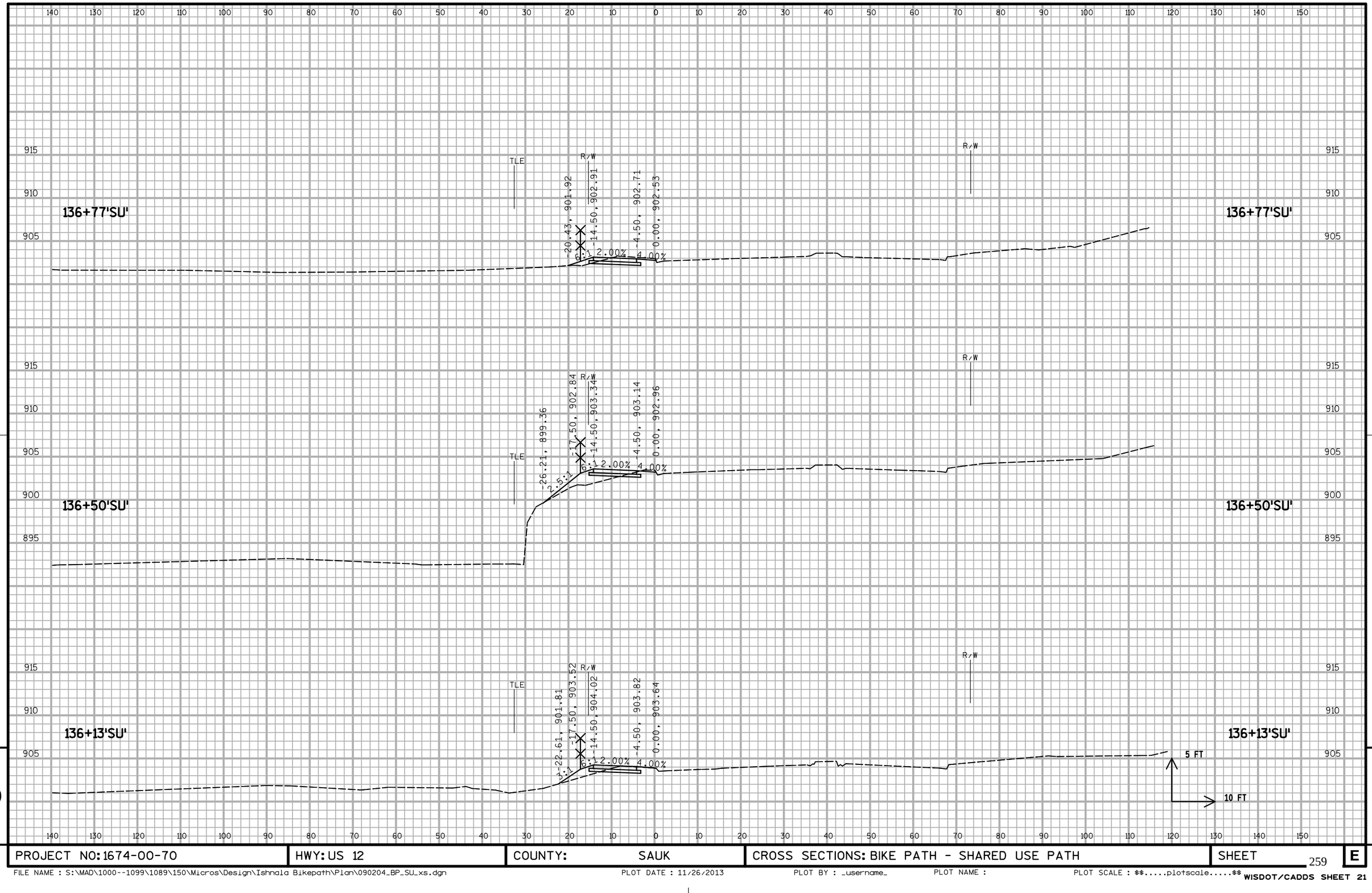

PROJECT NO: 1674-00-70	HWY: US 12	COUNTY: SAUK	CROSS SECTIONS: BIKE PATH - SHARED USE PATH	SHEET 259	E

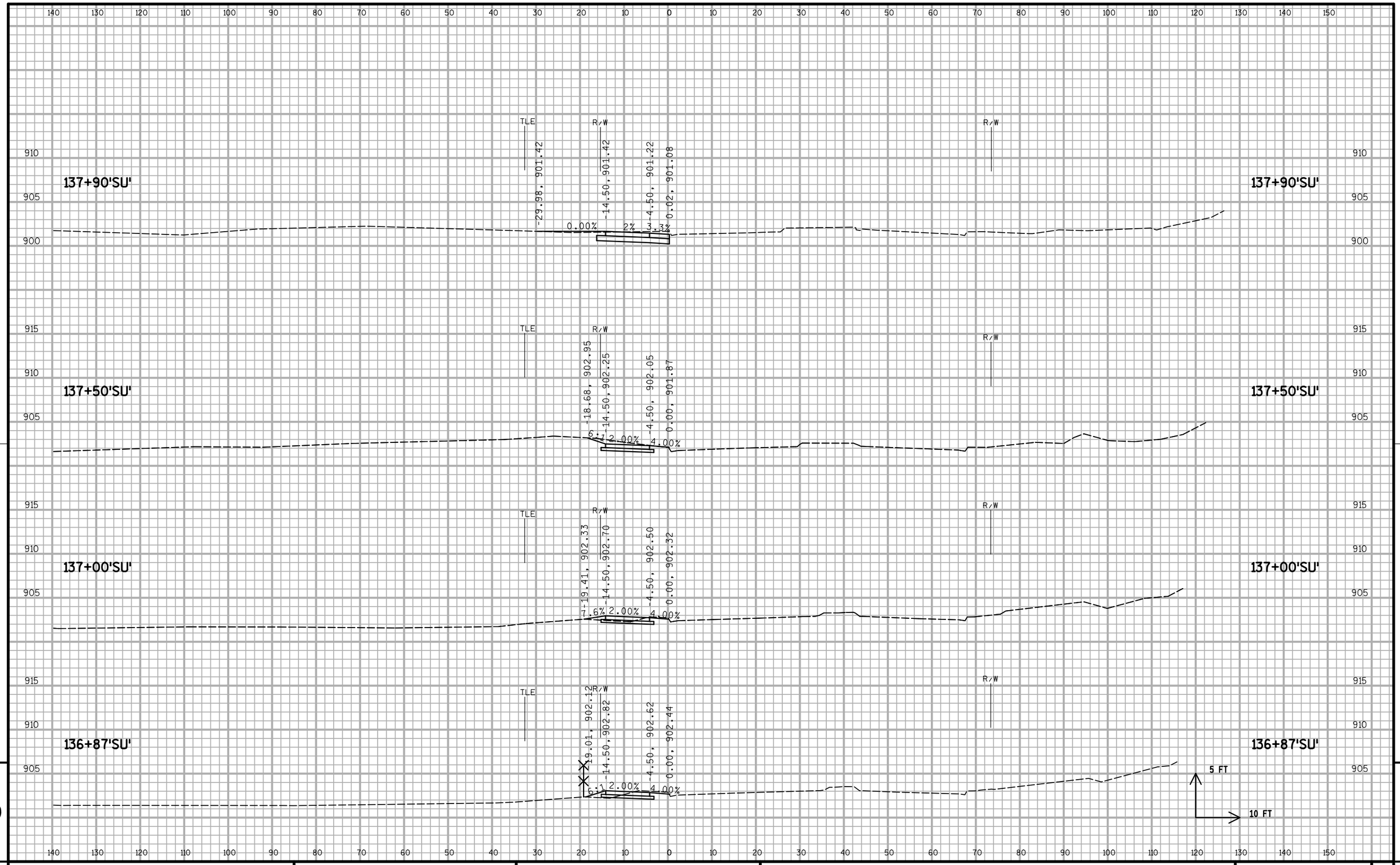

9

9

PROJECT NO: 1674-00-70	HWY: US 12	COUNTY: SAUK	CROSS SECTIONS: BIKE PATH - SHARED USE PATH	SHEET 260	E

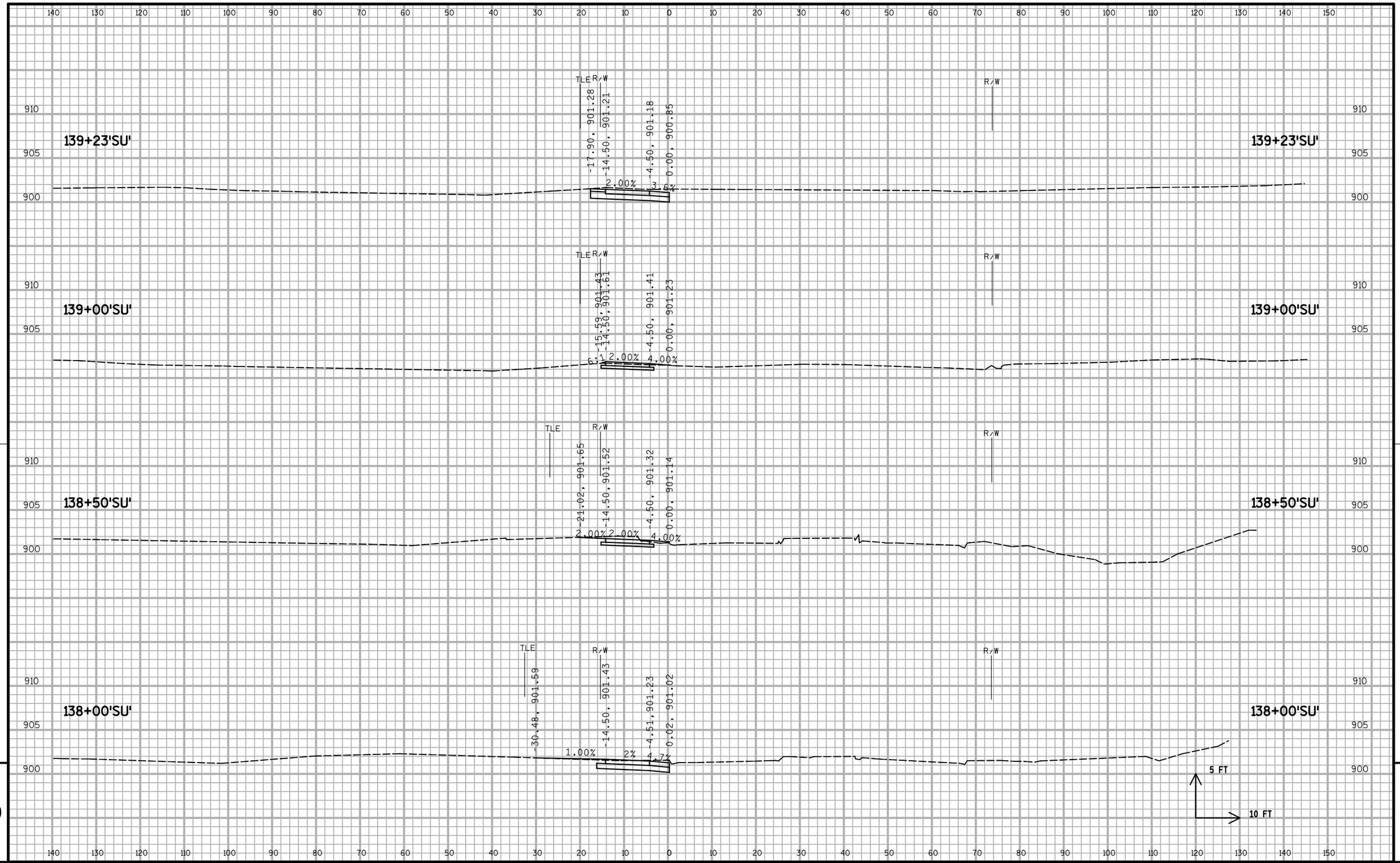

9

9

PROJECT NO: 1674-00-70	HWY: US 12	COUNTY: SAUK	CROSS SECTIONS: BIKE PATH - SHARED USE PATH	SHEET 261	E

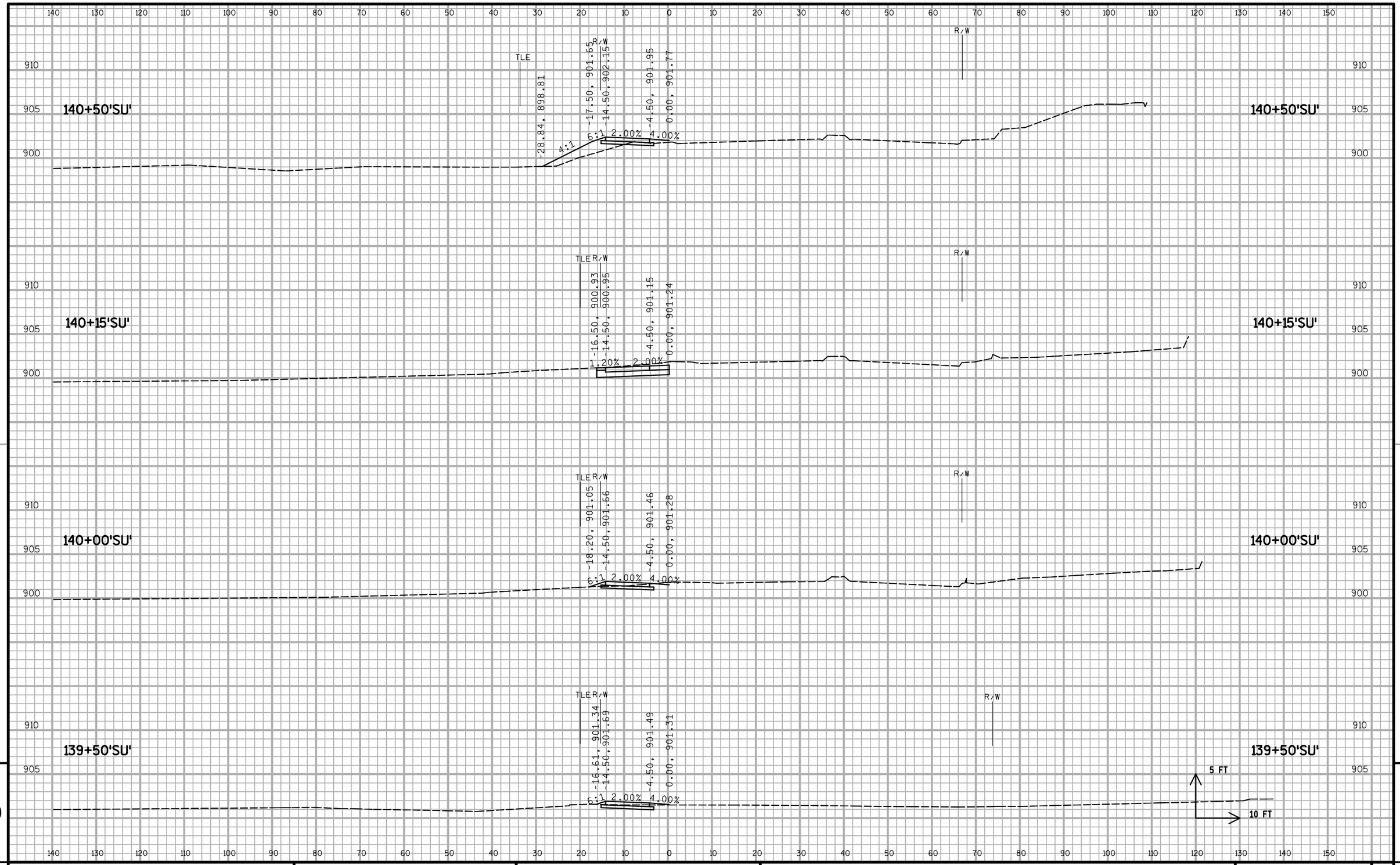

9

9

PROJECT NO: 1674-00-70	HWY: US 12	COUNTY: SAUK	CROSS SECTIONS: BIKE PATH - SHARED USE PATH	SHEET 262	E

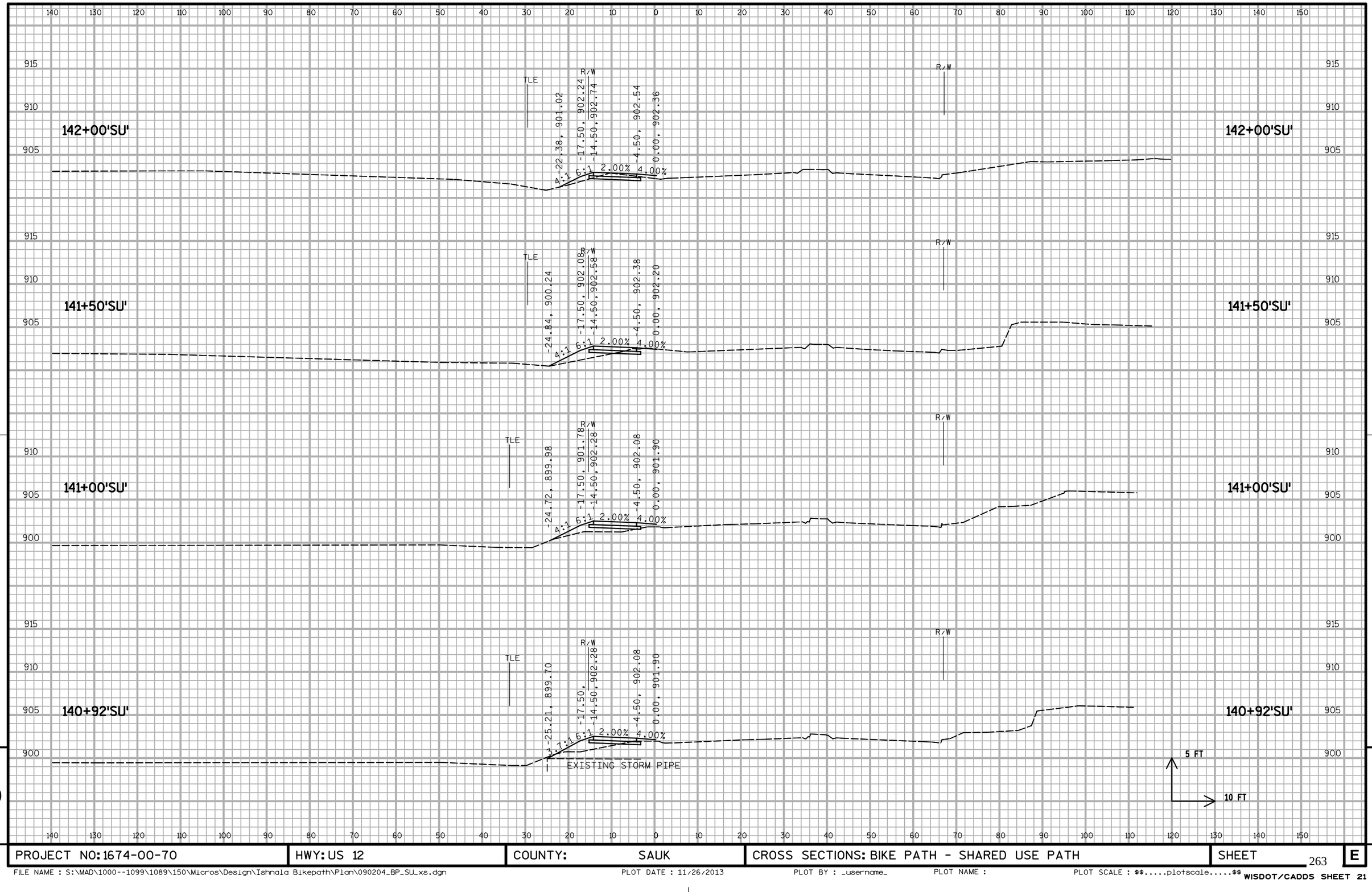

9

9

PROJECT NO: 1674-00-70	HWY: US 12	COUNTY: SAUK	CROSS SECTIONS: BIKE PATH - SHARED USE PATH	SHEET 263	E

FILE NAME : S:\MAD\1000--1099\1089\150\Micros\Design\Ishnala Bikepath\Plan\090204_BP_SU_xs.dgn PLOT DATE : 11/26/2013 PLOT BY : _username_ PLOT NAME : PLOT SCALE : $$.....plotscale.....$$ WISDOT/CADDS SHEET 21

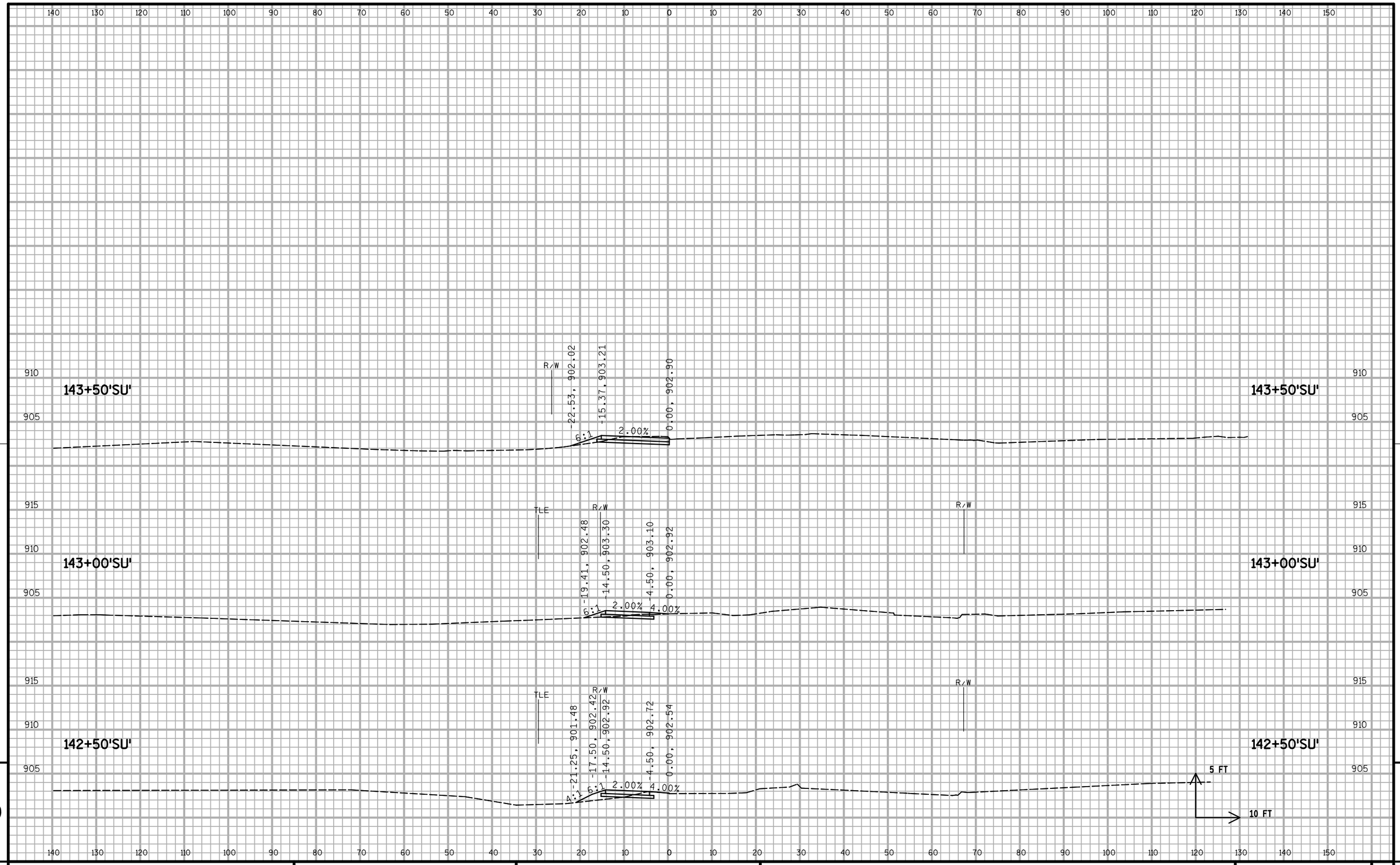

9

9

PROJECT NO: 1674-00-70	HWY: US 12	COUNTY: SAUK	CROSS SECTIONS: BIKE PATH - SHARED USE PATH	SHEET 264	E

FILE NAME : S:\MAD\1000--1099\1089\150\Micros\Design\Ishnala Bikepath\Plan\090204_BP_SU_xs.dgn PLOT DATE : 11/26/2013 PLOT BY : _username_ PLOT NAME : PLOT SCALE : $$.....plotscale.....$$ WISDOT/CADDS SHEET 21

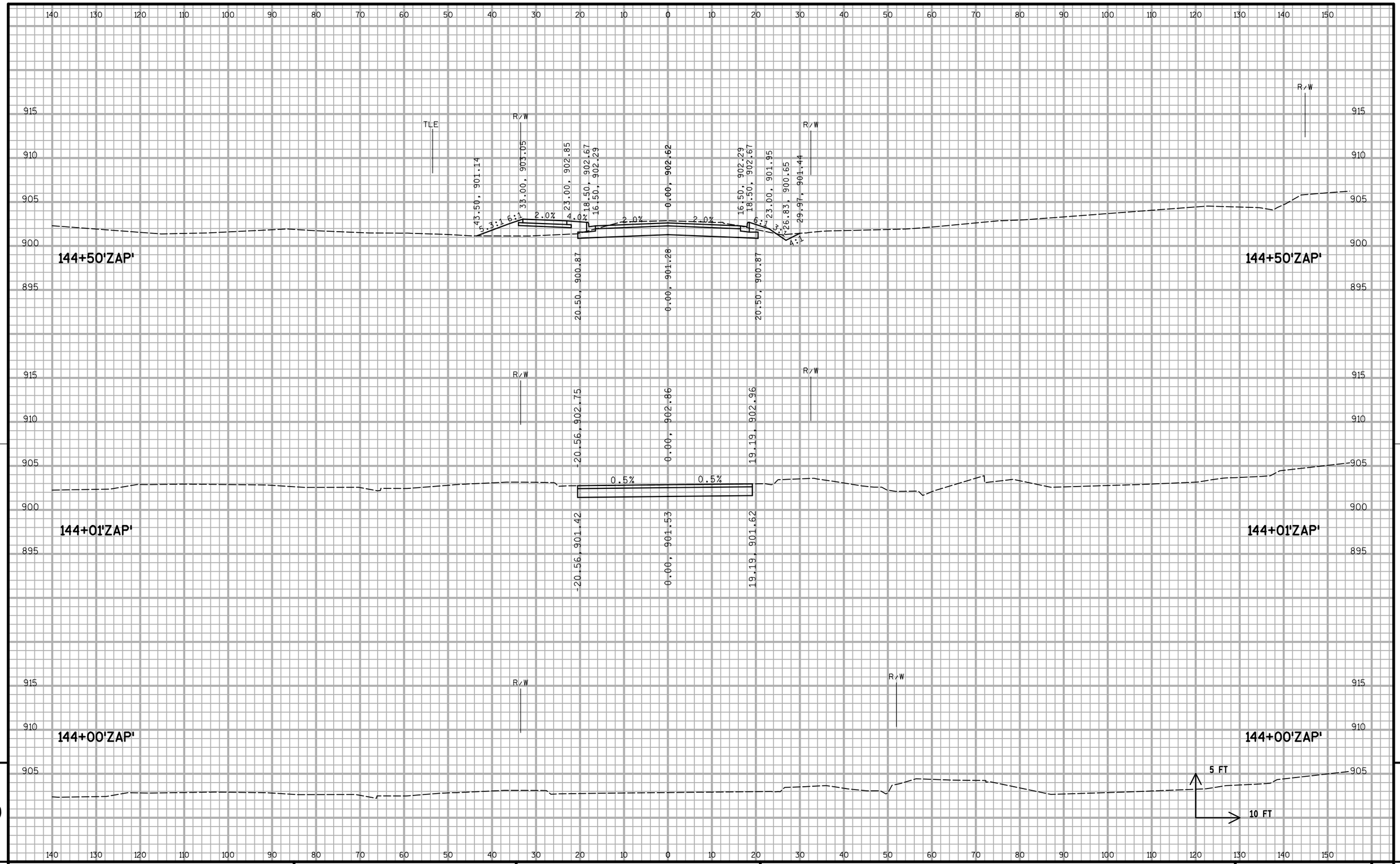

9

9

PROJECT NO: 1674-00-70	HWY: US 12	COUNTY: SAUK	CROSS SECTIONS: ZAP DRIVE	SHEET 265	E

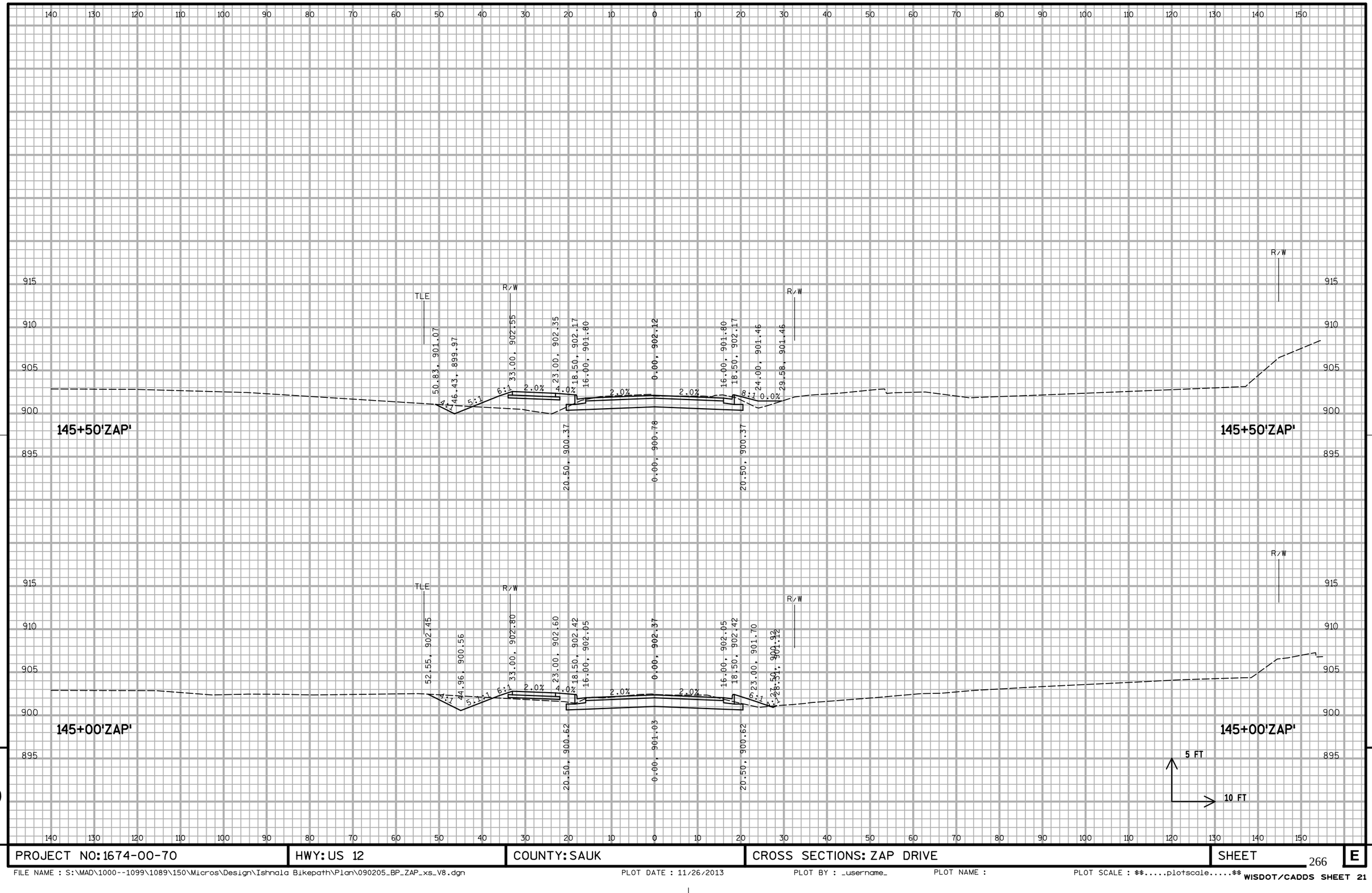

9

9

PROJECT NO: 1674-00-70	HWY: US 12	COUNTY: SAUK	CROSS SECTIONS: ZAP DRIVE	SHEET	E

FILE NAME : S:\MAD\1000--1099\1089\150\Micros\Design\Ishnala Bikepath\Plan\090205_BP_ZAP_xs_V8.dgn PLOT DATE : 11/26/2013 PLOT BY : _username_ PLOT NAME : PLOT SCALE : $$.....plotscale.....$$

WISDOT/CADDS SHEET 21

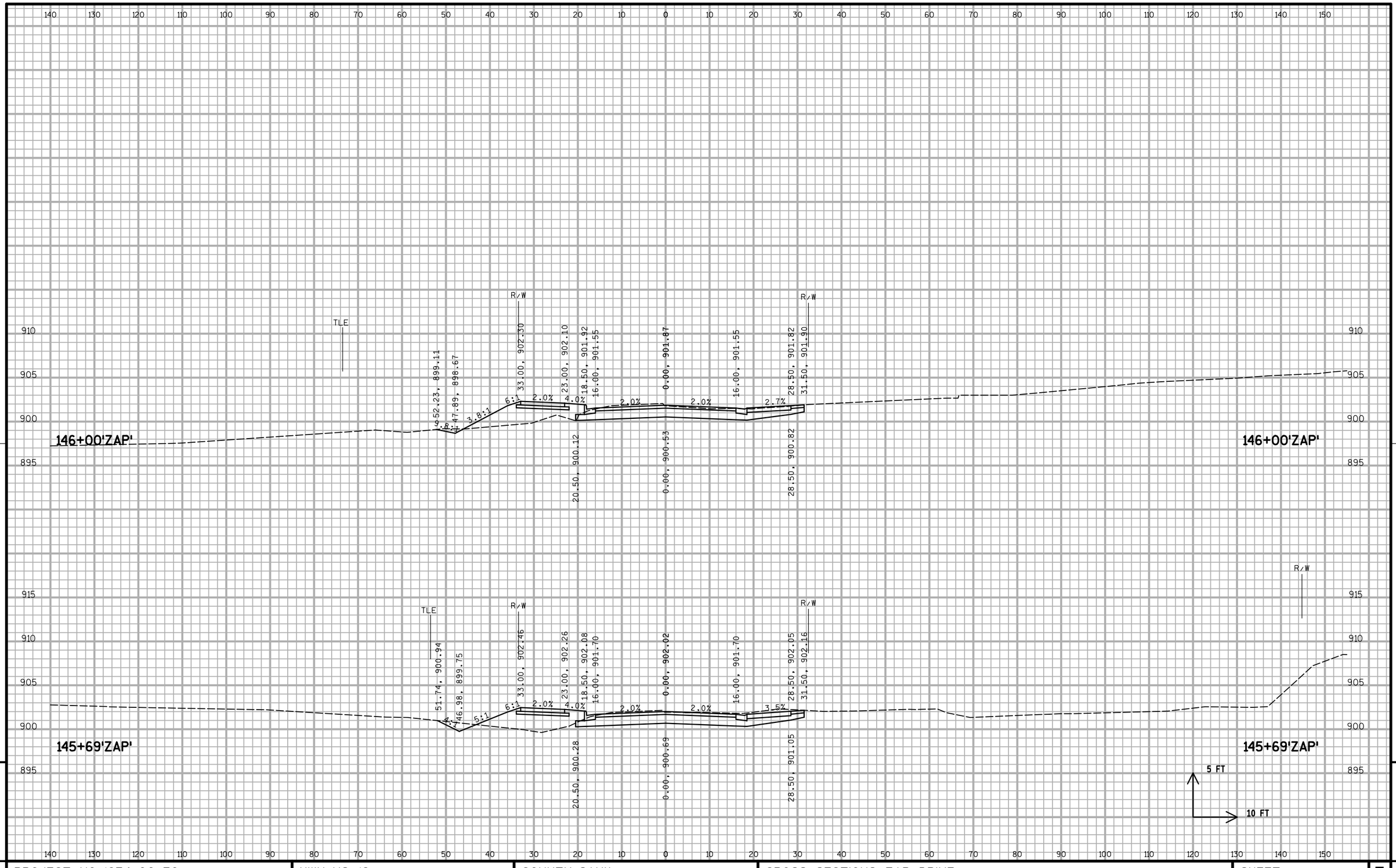

9

9

PROJECT NO: 1674-00-70	HWY: US 12	COUNTY: SAUK	CROSS SECTIONS: ZAP DRIVE	SHEET	E

FILE NAME : S:\MAD\1000--1099\1089\150\Micros\Design\Ishnala Bikepath\Plan\090205_BP_ZAP_xs_V8.dgn PLOT DATE : 11/26/2013 PLOT BY : _username_ PLOT NAME : PLOT SCALE : $$.....plotscale.....$$ WISDOT/CADDS SHEET 21

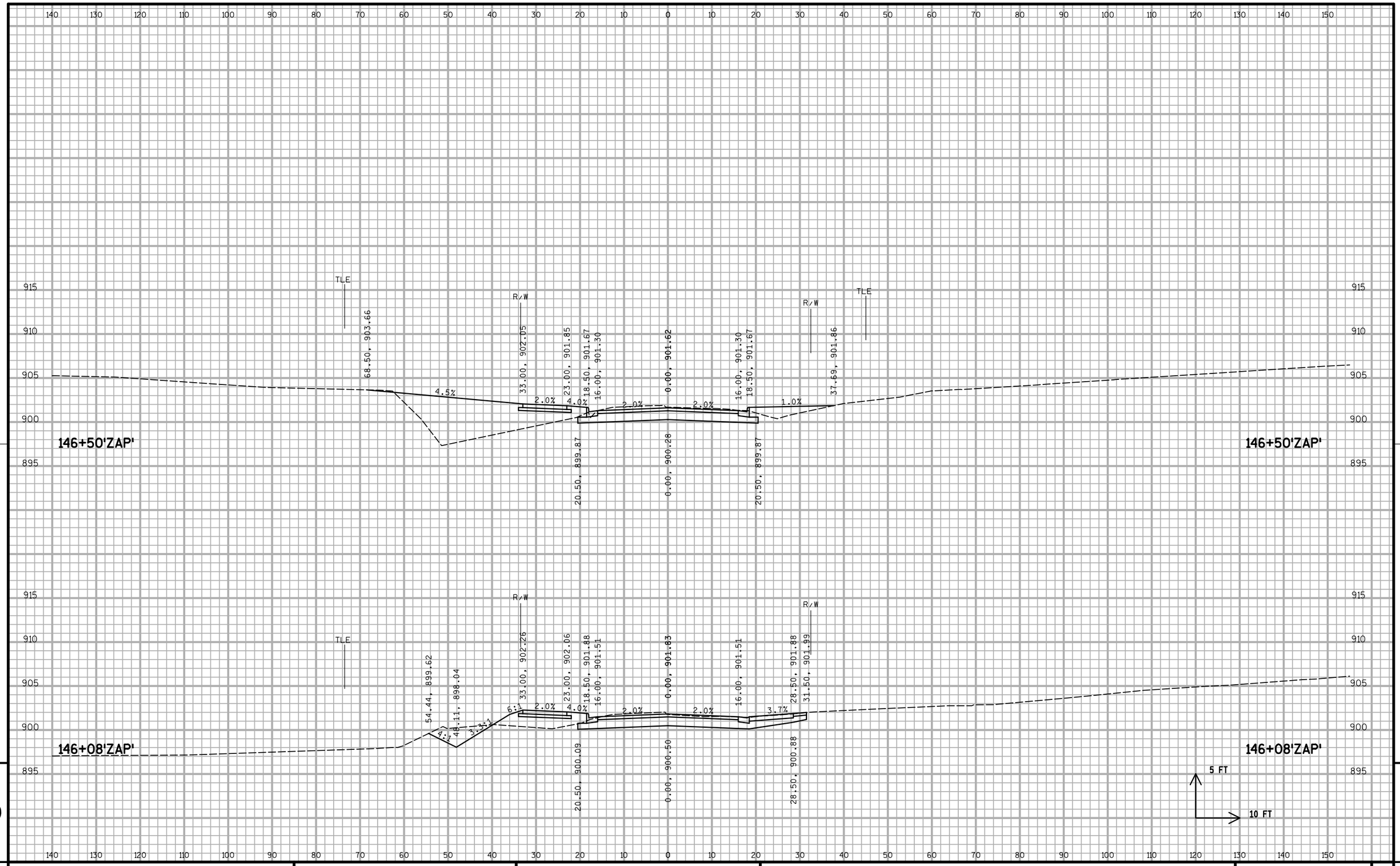

9

9

PROJECT NO: 1674-00-70	HWY: US 12	COUNTY: SAUK	CROSS SECTIONS: ZAP DRIVE	SHEET 268	E

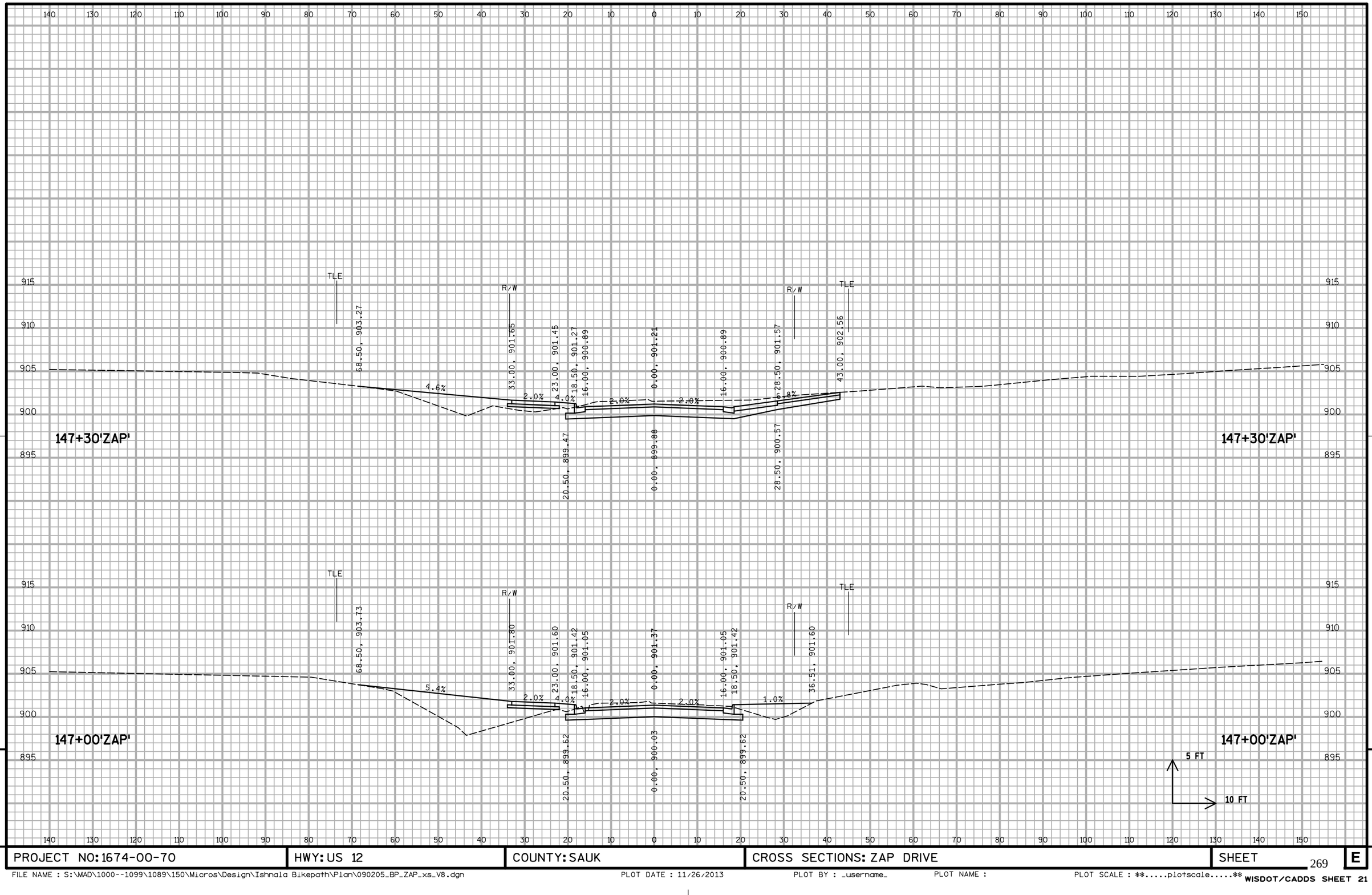

PROJECT NO: 1674-00-70	HWY: US 12	COUNTY: SAUK	CROSS SECTIONS: ZAP DRIVE	SHEET	E

FILE NAME : S:\MAD\1000--1099\1089\150\Micros\Design\Ishnala Bikepath\Plan\090205_BP_ZAP_xs_V8.dgn PLOT DATE : 11/26/2013 PLOT BY : _username_ PLOT NAME : PLOT SCALE : $$.....plotscale.....$$ WISDOT/CADDS SHEET 21

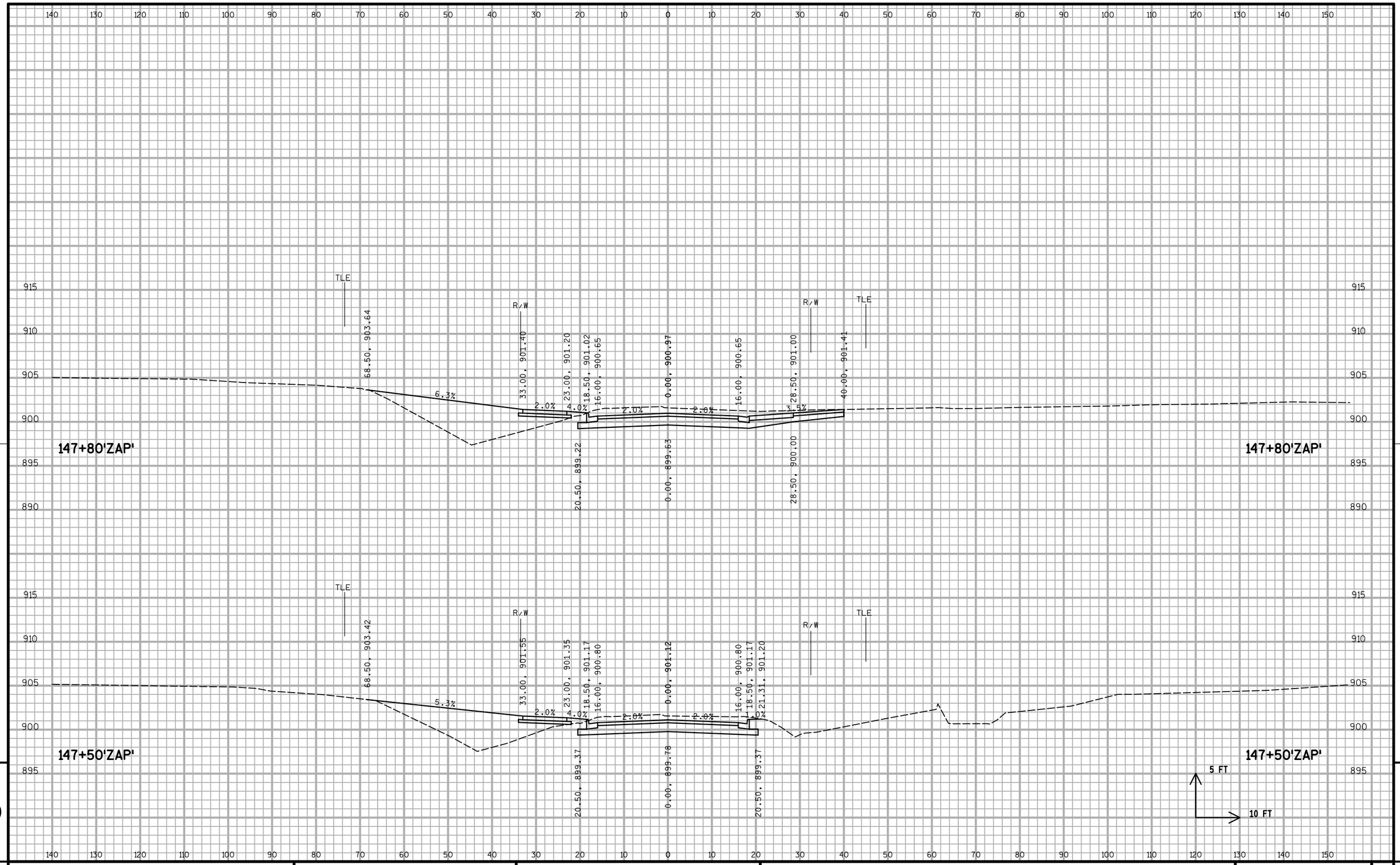

9

9

PROJECT NO: 1674-00-70	HWY: US 12	COUNTY: SAUK	CROSS SECTIONS: ZAP DRIVE	SHEET 270	E

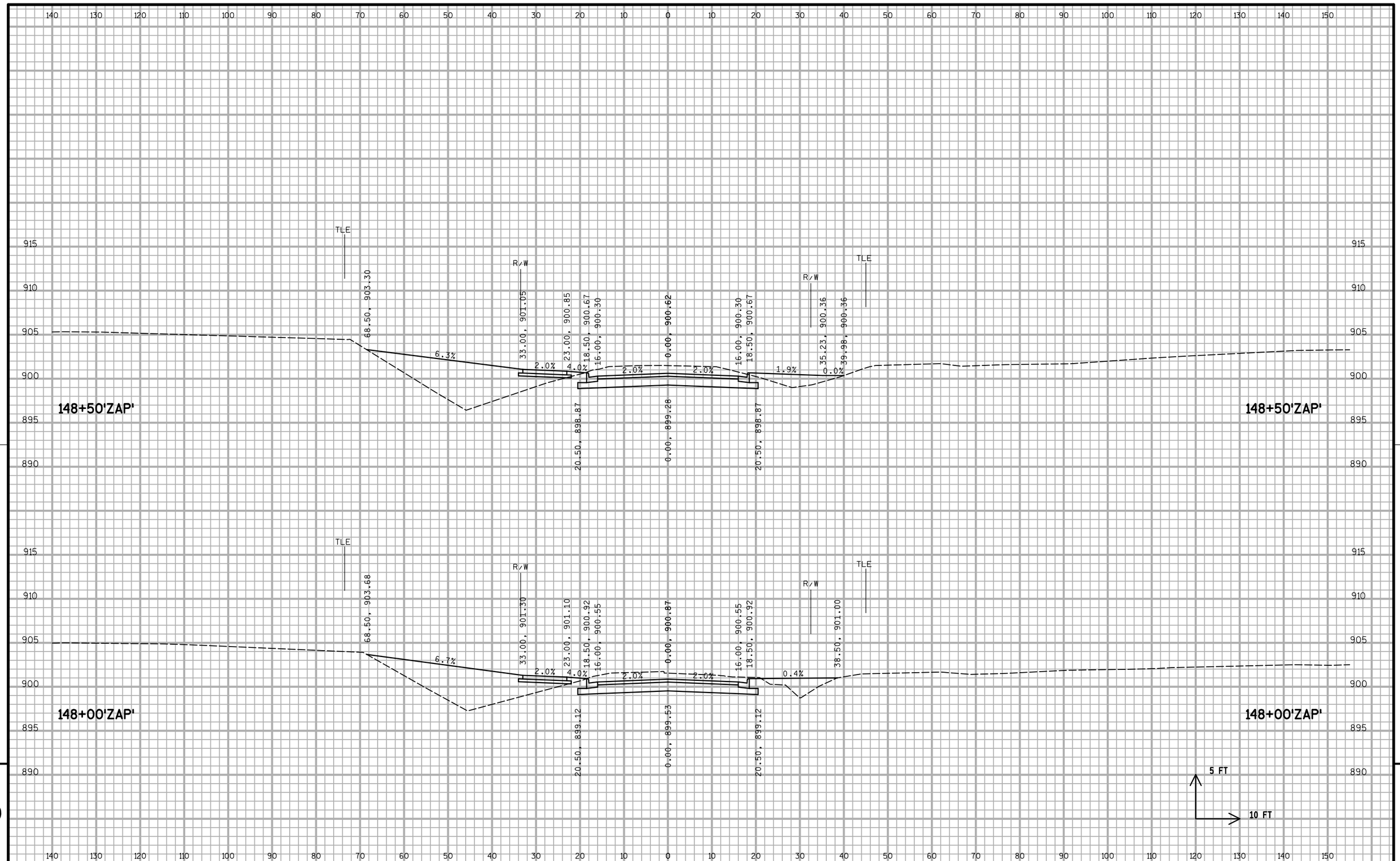

9

9

PROJECT NO: 1674-00-70	HWY: US 12	COUNTY: SAUK	CROSS SECTIONS: ZAP DRIVE	SHEET 271	E

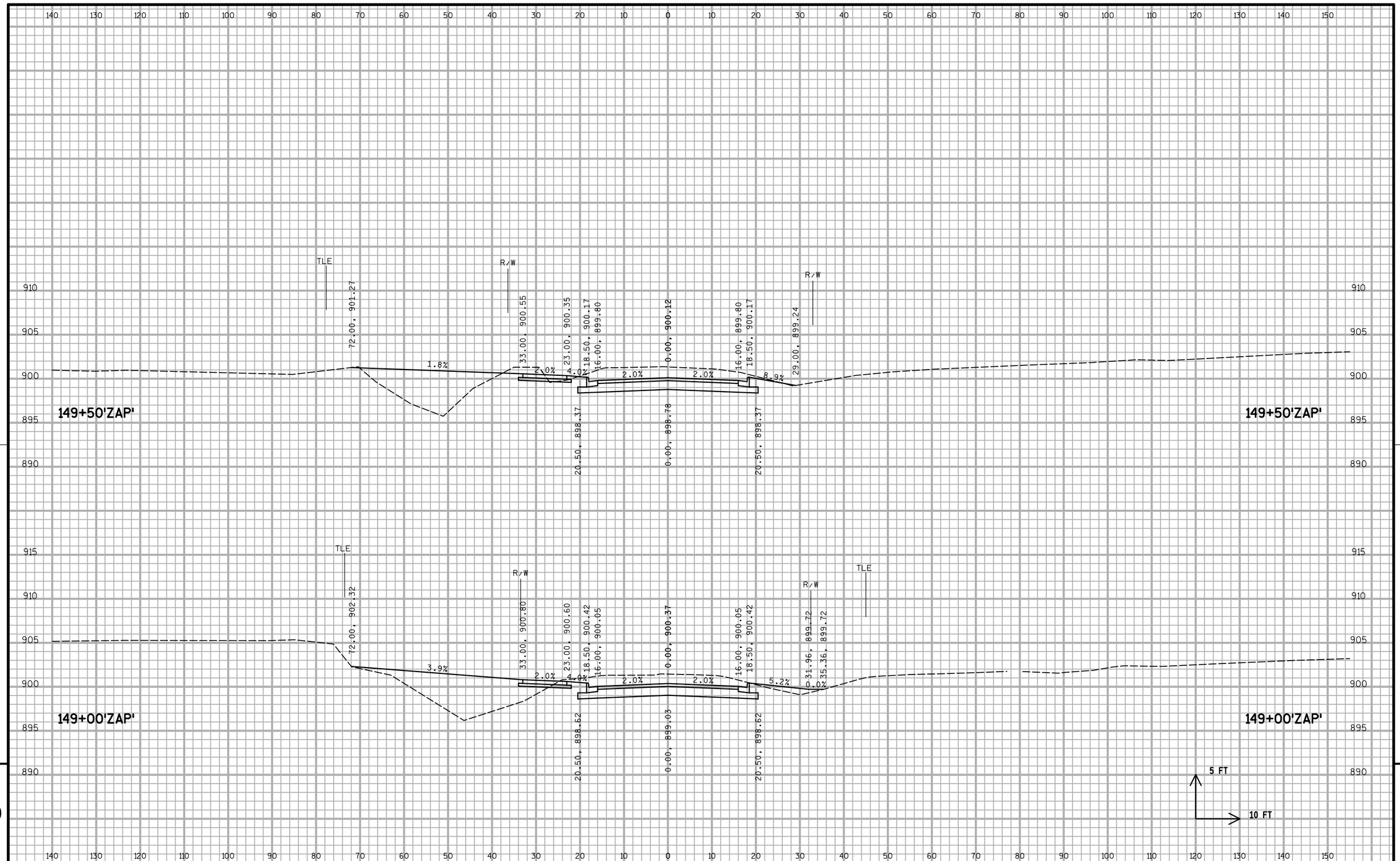

9

9

PROJECT NO: 1674-00-70	HWY: US 12	COUNTY: SAUK	CROSS SECTIONS: ZAP DRIVE	SHEET 272	E

FILE NAME : S:\MAD\1000--1099\1089\150\Micros\Design\Ishnala Bikepath\Plan\090205_BP_ZAP_xs_V8.dgn PLOT DATE : 11/26/2013 PLOT BY : _username_ PLOT NAME : PLOT SCALE : $$.....plotscale.....$$ WISDOT/CADDS SHEET 21

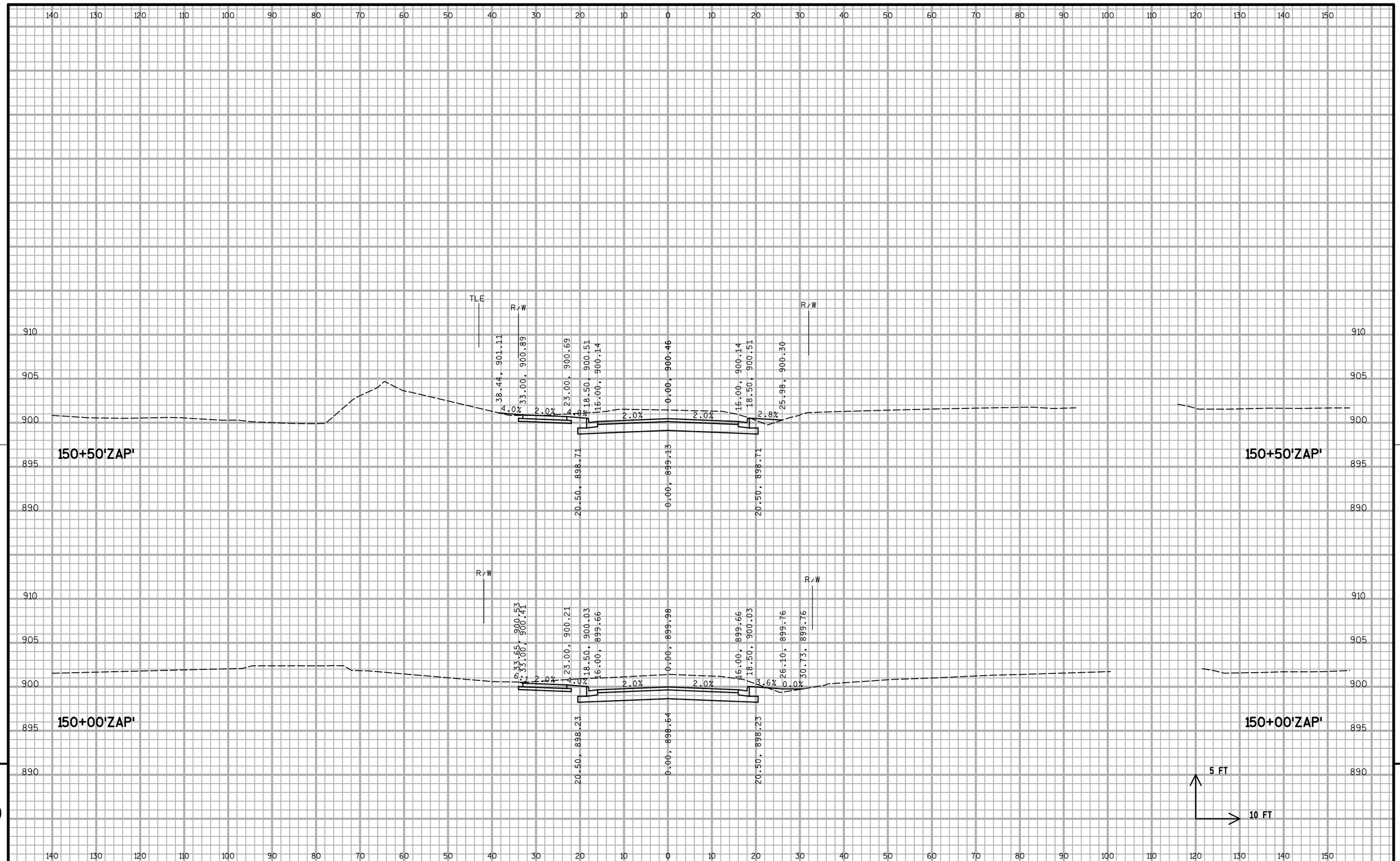

9

9

PROJECT NO: 1674-00-70	HWY: US 12	COUNTY: SAUK	CROSS SECTIONS: ZAP DRIVE	SHEET 273	E

FILE NAME : S:\MAD\1000--1099\1089\150\Micros\Design\Ishnala Bikepath\Plan\090205_BP_ZAP_xs_V8.dgn PLOT DATE : 11/26/2013 PLOT BY : _username_ PLOT NAME : PLOT SCALE : $$.....plotscale.....$$ WISDOT/CADDS SHEET 21

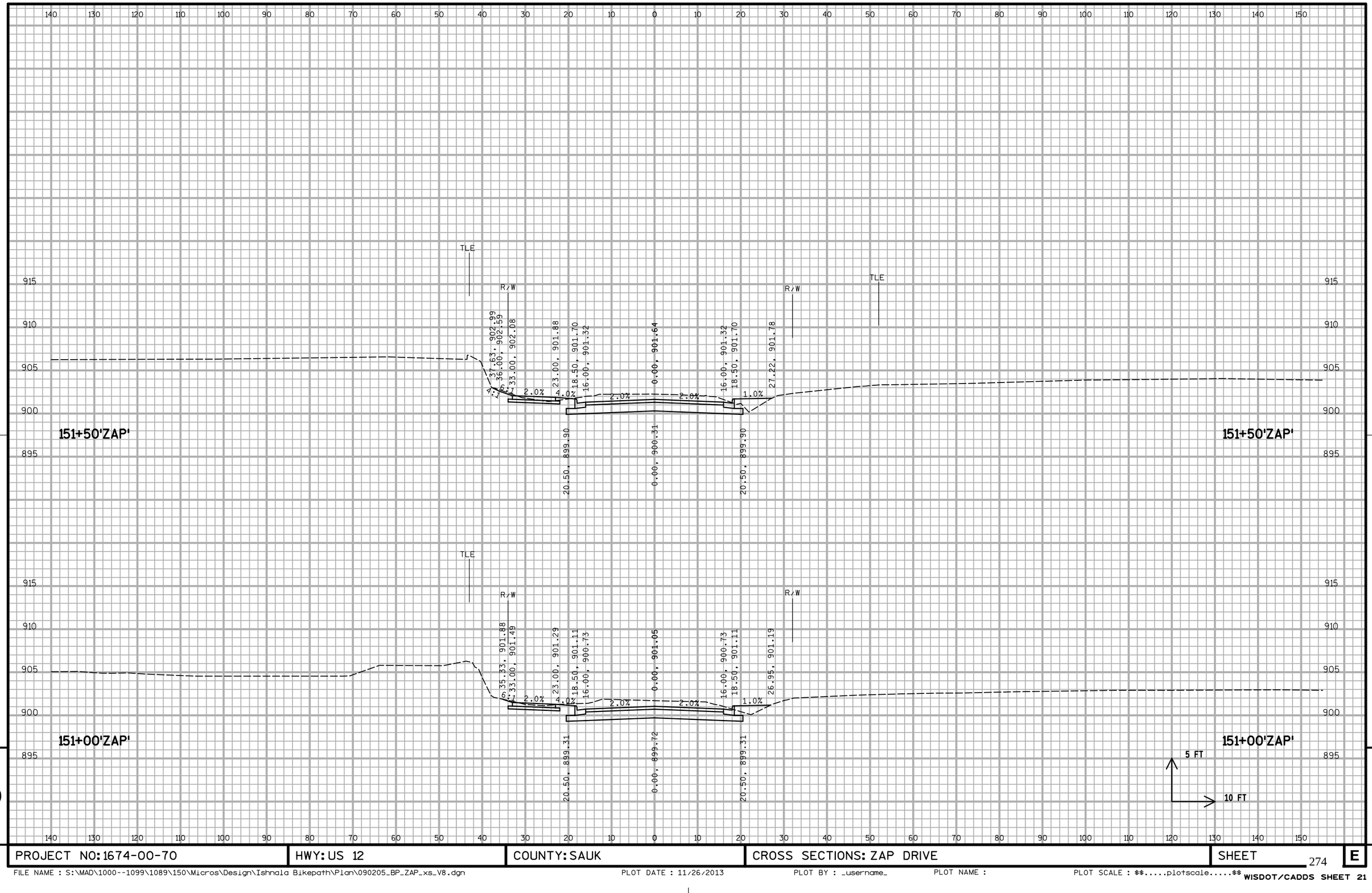

9

9

PROJECT NO: 1674-00-70	HWY: US 12	COUNTY: SAUK	CROSS SECTIONS: ZAP DRIVE	SHEET 274	E

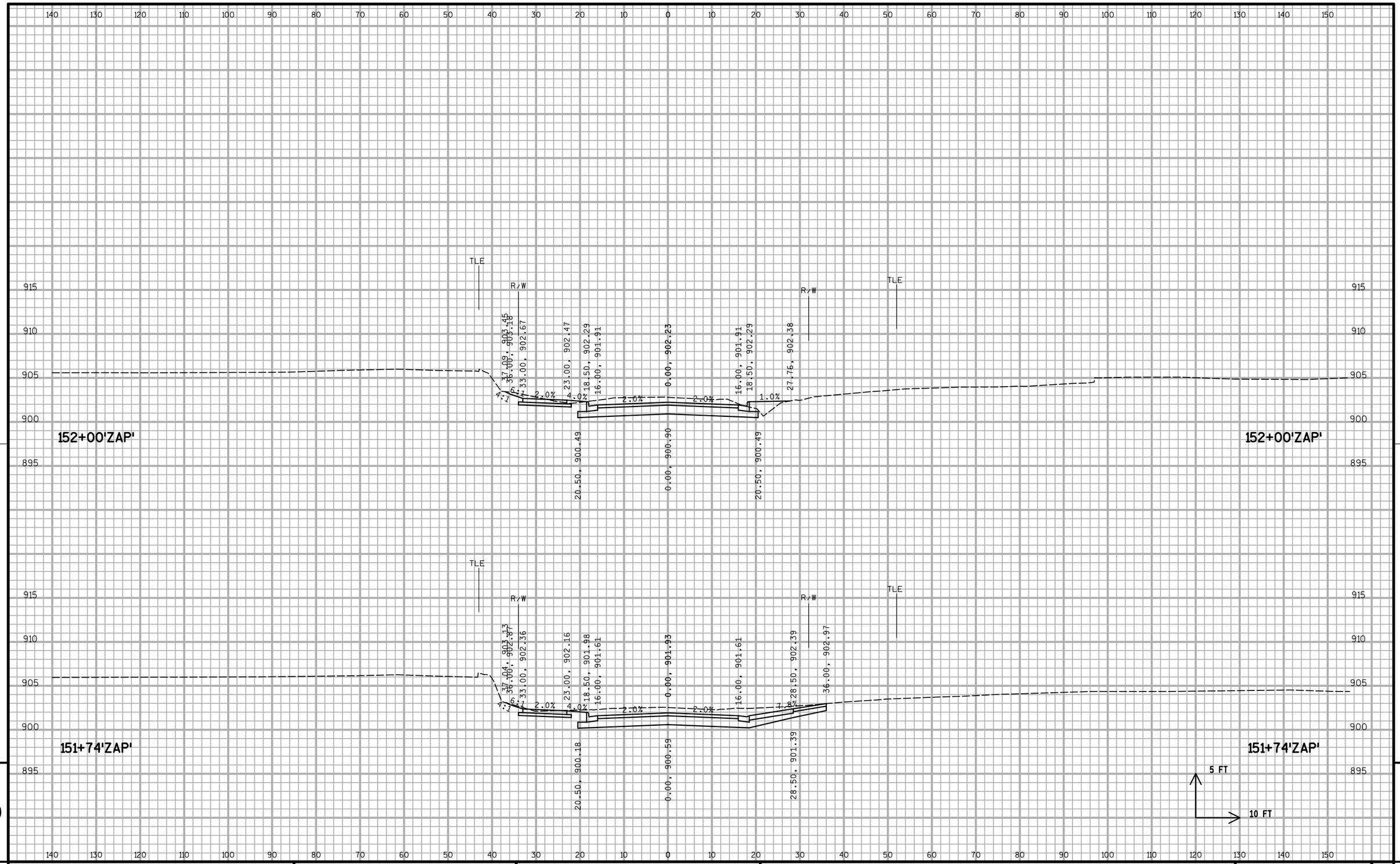

9

9

PROJECT NO: 1674-00-70	HWY: US 12	COUNTY: SAUK	CROSS SECTIONS: ZAP DRIVE	SHEET 275	E

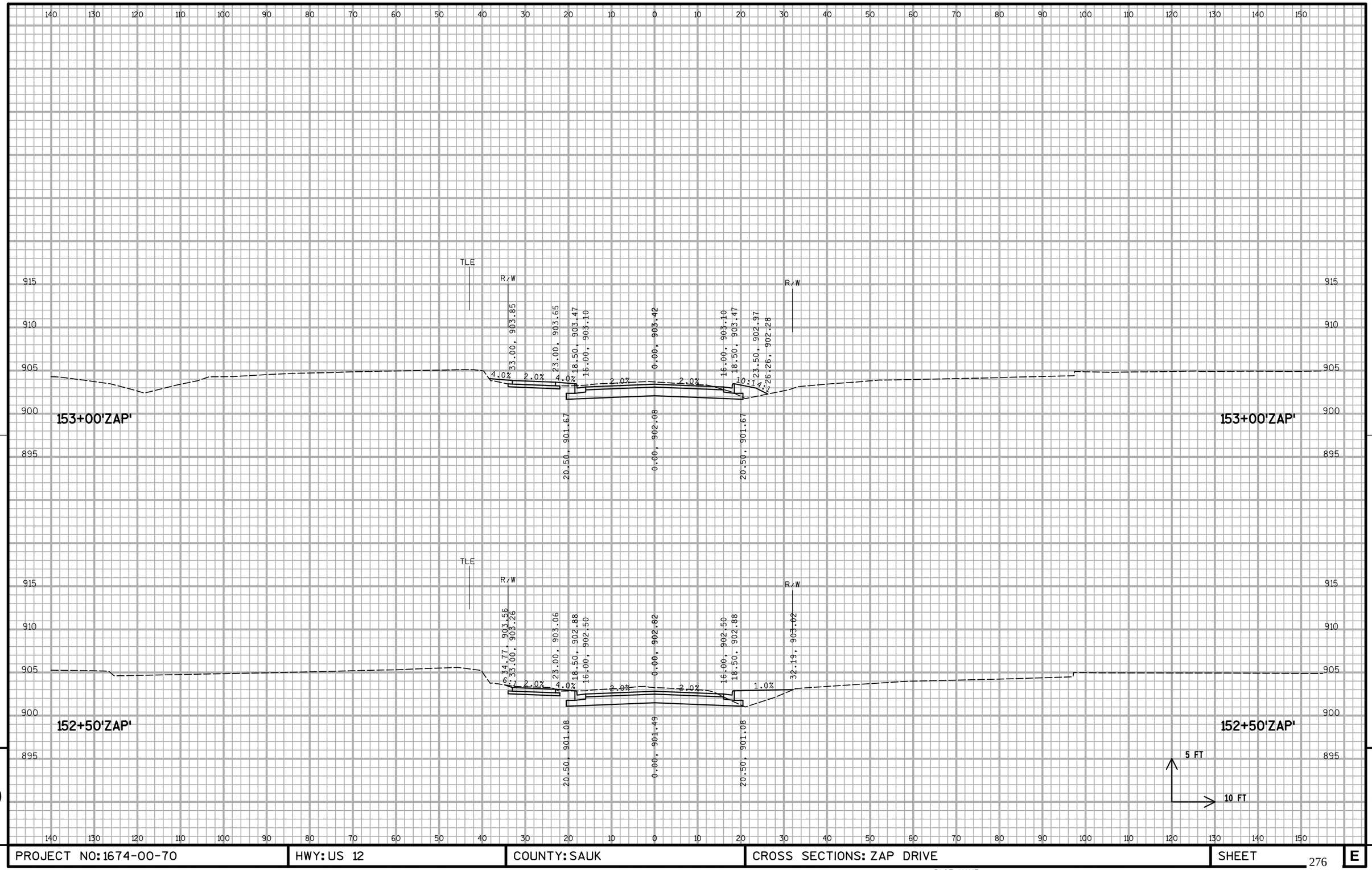

9

9

PROJECT NO: 1674-00-70	HWY: US 12	COUNTY: SAUK	CROSS SECTIONS: ZAP DRIVE	SHEET 276	E

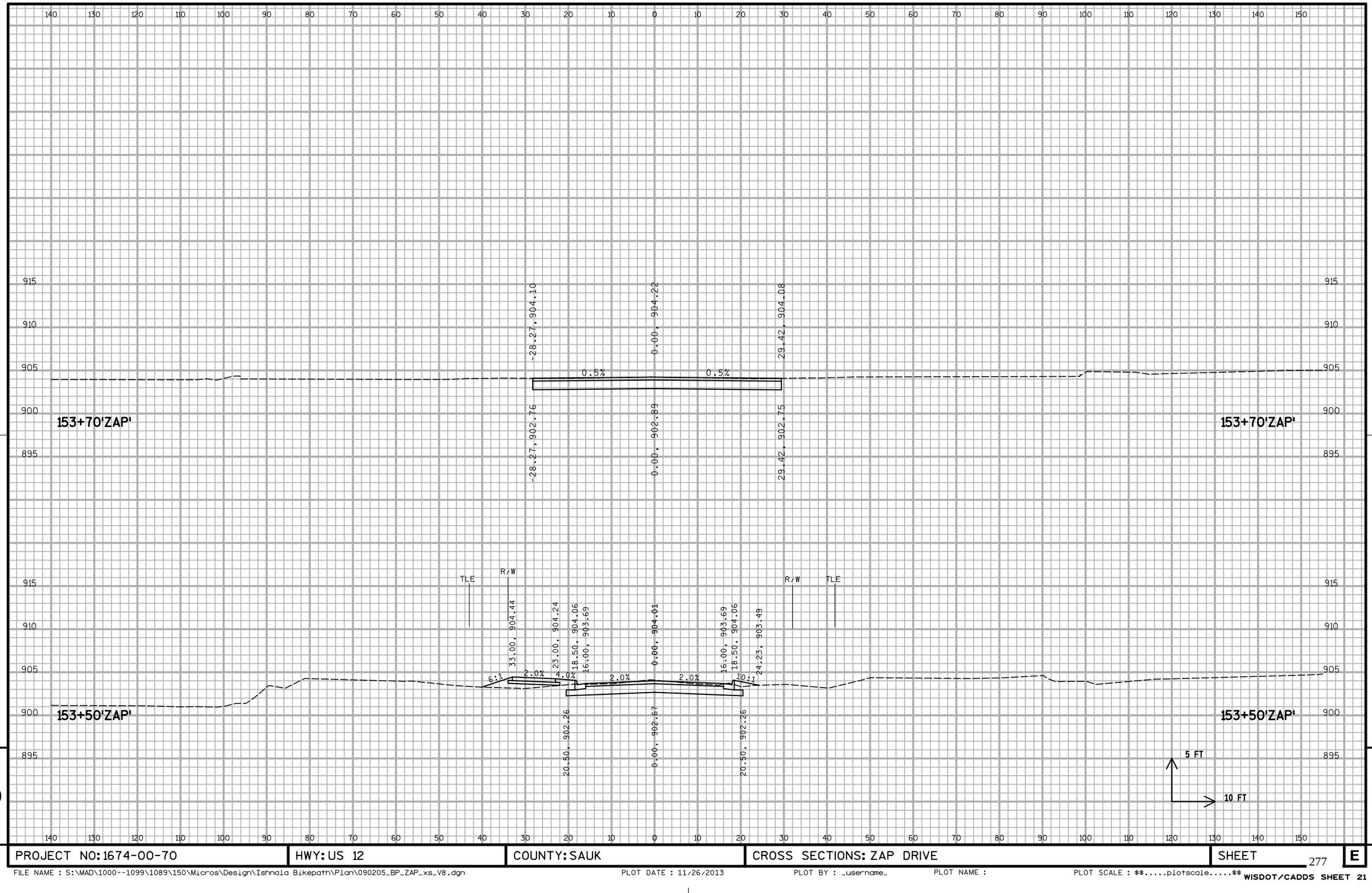

9

9

PROJECT NO: 1674-00-70	HWY: US 12	COUNTY: SAUK	CROSS SECTIONS: ZAP DRIVE	SHEET 277	E

Wisconsin Department of Transportation

Dedicated people creating transportation solutions
through innovation and exceptional service.

http://www.dot.wisconsin.gov