SEL

JAN 2014

ORDER OF SHEETS

TOTAL SHEETS = 300

PROJECT ID: 2722-10-70

WITH: N/A

COUNTY: WAUKESHA

STATE OF WISCONSIN
DEPARTMENT OF TRANSPORTATION

PLAN OF PROPOSED IMPROVEMENT

COFFEE ROAD

CALHOUN ROAD TO NATIONAL AVENUE

LOCAL STREET
WAUKESHA COUNTY

STATE PROJECT	FEDERAL PROJECT	
	PROJECT	CONTRACT
2722-10-70	WISC 2014002	1

STATE PROJECT NUMBER

2722-10-70

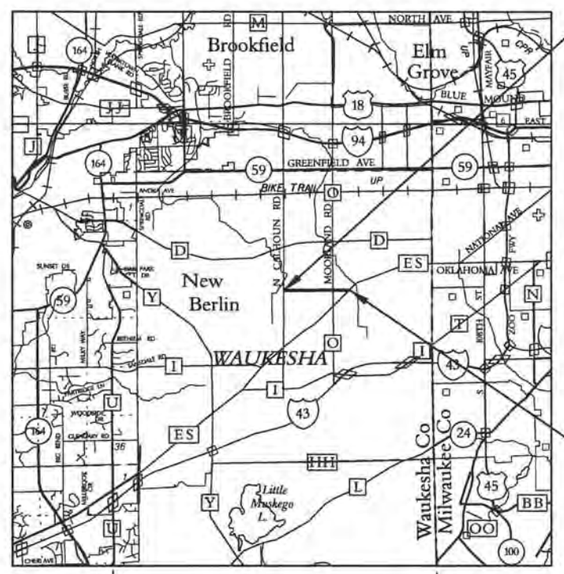

BEGIN PROJECT ID 2722-10-70
STA 164+41.94, COFFEE ROAD
Y= 363,083.97
X= 2,501,015.22

END PROJECT ID 2722-10-70
STA 234+78.59, COFFEE ROAD

DESIGN DESIGNATION

			CALHOUN-MOORLAND	MOORLAND-NATIONAL
ADT	(2012)	=	7,100	8,300
ADT	(2032)	=	8,200	9,600
DHV	(2032)	=	976	1,517
DD		=	58/42	58/42
T		=	3.6%	3.6%
DESIGN SPEED		=	40-45 MPH	40 MPH
ESALS		=	614,300	708,100

CONVENTIONAL SYMBOLS

PLAN

CORPORATE LIMITS
PROPERTY LINE
LOT LINE
LIMITED HIGHWAY EASEMENT
EXISTING RIGHT OF WAY
PROPOSED OR NEW R/W LINE
SLOPE INTERCEPT
REFERENCE LINE
EXISTING CULVERT
PROPOSED CULVERT (Box or Pipe)
COMBUSTIBLE FLUIDS — CAUTION
MARSH AREA
WOODED OR SHRUB AREA

PROFILE

GRADE LINE
ORIGINAL GROUND
MARSH OR ROCK PROFILE (To be noted as such) — ROCK
SPECIAL DITCH — LABEL
GRADE ELEVATION — 95.36
CULVERT (Profile View)

UTILITIES

ELECTRIC — E
FIBER OPTIC — FO
GAS — G
SANITARY SEWER — SAN
STORM SEWER — SS
TELEPHONE — T
WATER — W
UTILITY PEDESTAL
POWER POLE
TELEPHONE POLE

LAYOUT
SCALE 0 1.5 MI

TOTAL NET LENGTH OF CENTERLINE = 1.333 MI (URBAN)

HORIZONTAL DATUM IS BASED ON THE WISCONSIN STATE PLANE COORDINATE SYSTEM GROUND, SOUTH ZONE (NAD-27), AND ALL BEARINGS ARE REFERRED TO GROUND NORTH

COORDINATES SHOWN ON PLAN ARE GROUND COORDINATES

COMBINATION SCALE AND SEA LEVEL REDUCTION FACTOR: 0.99991852

ELEVATIONS SHOWN ON THIS PLAN ARE REFERENCED TO NGVD 29

ACCEPTED FOR
CITY OF NEW BERLIN

7/11/2013 (Date) — (Signature & Title) City Engineer

ORIGINAL PLANS PREPARED BY

KAPUR & ASSOCIATES, INC.
CONSULTING ENGINEERS
MILWAUKEE, WISCONSIN
414.351.6668

WISCONSIN PROFESSIONAL ENGINEER — KURT A. FARRENKOPF E-27600 MENOMONEE FALLS, WI.

7-11-2013 (Date) — (Signature)

STATE OF WISCONSIN
DEPARTMENT OF TRANSPORTATION

PREPARED BY

Surveyor: Kapur & Associates, Inc.
Designer: Kapur & Associates, Inc.
Management Consultant: DAAR Engineering
C.O. Examiner:

APPROVED FOR DEPARTMENT OFFICE

DATE: 7/31/2013

Management Consultant Signature

E

2

ABBREVIATIONS

ADT	AVERAGE DAILY TRAFFIC
AGG	AGGREGATE
AH	AHEAD ONLY
BA	BEGIN ABRUPT
BM	BENCH MARK
BK	BACK ONLY
BOT	BOTTOM
BRG	BEARING
BTWN	BETWEEN
C&G	CURB AND GUTTER
C-C	CENTER TO CENTER
CONC	CONCRETE
CR	CRUSHED
CTR	CENTER
CWT	HUNDREDWEIGHT
CY OR CU YD	CUBIC YARD
D	DEGREE OF CURVE
DD	DIRECTIONAL DISTRIBUTION
DHV	DESIGN HOUR VOLUME
DIA OR Ø	DIAMETER
E	EAST
EA	END ABRUPT
EB	EASTBOUND
EL OR ELEV	ELEVATION
ELEC	ELECTRIC(AL)
ESALS	EQUIVALENT SINGLE AXLE LOADS
EXIST	EXISTING
FS	FULL SUPERELEVATION
FT	FOOT
FTMS	FREEWAY TRAFFIC MANAGEMENT SYSTEM
GA	GAUGE
GALV	GALVANIZE
HMA	HOT MIX ASPHALT
HP	HIGH POINT
HYD	HYDRANT
INCID	INCIDENTAL
INL	INLET
JB#	JUNCTION BOX
K	K-VALUE
L	LENGTH OF CURVE
LIN FT OR LF	LINEAR FOOT
LONG	LONGITUDINAL
LT	LEFT
LP	LOW POINT
MH	MANHOLE
ML OR M/L	MATCH LINE
N	NORTH
NB	NORTHBOUND
NGVD	NATIONAL GEODETIC VERTICAL DATUM
NIC	NOT IN CONTRACT
NOR	NORMAL
PAVT OR PVMT	PAVEMENT
PB#	PULL BOX
PC	POINT OF CURVATURE
PCC	POINT OF COMPOUND CURVATURE
PG OR PGL	PROFILE GRADE LINE
PI	POINT OF INTERSECTION
PLE	PERMANENT LIMITED EASEMENT
PSI	POUNDS PER SQUARE INCH
PT	POINT OF TANGENCY
R	RADIUS
RCPSS	REINFORCED CONCRETE PIPE STORM SEWER
REBAR	REINFORCING BAR
RL OR R/L	REFERENCE LINE
RT	RIGHT
RW OR R/W	RIGHT-OF-WAY
S	SOUTH
SAN S	SANITARY SEWER
SB	SOUTHBOUND
SDD	STANDARD DETAIL DRAWINGS
SHT	SHEET
SPA	SPACING
SS	STORM SEWER
SSS	SANITARY SEWER AND STORM SEWER
STA	STATION
STIFF	STIFFENER
SYM	SYMMETRICAL
T	TRUCKS (PERCENT OF) OR TANGENT
TEL	TELEPHONE
TEMP	TEMPORARY
TYP	TYPICAL
V	VELOCITY OR DESIGN SPEED
VAR	VARIABLE OR VARIES
VPC	VERTICAL POINT CURVATURE
VPCC	VERTICAL POINT COMPOUND CURVATURE
VPI	VERTICAL POINT INTERSECTION
VPRC	VERTICAL POINT REVERSE CURVATURE
VPT	VERTICAL POINT TANGENCY
W	WEST
WB	WESTBOUND
YD	YARD

UTILITY ABBREVIATIONS

138kV	138 KILOVOLT
ATC	AMERICAN TRANSMISSION COMPANY
ATT	AMERICAN TELEPHONE AND TELEGRAPH
C	CITY OF MILWAUKEE COMMUNICATIONS
CSO	COMBINED SEWER OUTFALL
DOT	WISDOT STORM SEWER
E	ELECTRIC
FL	FREEWAY LIGHTING
FO	FIBER OPTICS
G	GAS
ISS	INTERCEPTOR SEWER STRUCTURE
ITS	INTELLIGENT TRANSPORTATION SYSTEM
MCI	MICROWAVE COMMUNICATIONS, INC.
MH	MANHOLE
MIS	METROPOLITAN INTERCEPTOR SEWER
MLD	Mc LEOD
MMSD	MILWAUKEE METROPOLITAN SEWERAGE DISTRICT
NSC	NEAR SURFACE COLLECTOR
OH	OVERHEAD ELECTRIC
PIPL	STEAM PIPE LINE
SAN	SANITARY
SBC	AT&T LOCAL SERVICE (FORMERLY SBC)
SS	STORM SEWER
SSS	SANITARY AND STORM SEWER
TA	AT&T LONG DISTANCE (FORMERLY TOUCH AMERICA)
TDS	TELEPHONE AND DATA SYSTEMS
TES	TRAFFIC AND ELECTRICAL SYSTEMS
TW	TIME WARNER
V	VALVE
W	WATER
WE	WE ENERGIES
X	ABANDONED

GENERAL NOTES

THE LOCATION OF EXISTING UTILITY INSTALLATIONS AS SHOWN ON THE PLANS ARE APPROXIMATE. THERE MAY BE OTHER UTILITY INSTALLATIONS WITHIN THE PROJECT AREA THAT ARE NOT SHOWN.

THE EARTHWORK YARDAGE WAS ESTIMATED BY EXPANDING THE FILL VOLUME. AN EXPANSION FACTOR OF 1.2 WAS USED.

THE LOCATION AND LIMITS OF EBS (EXCAVATION BELOW SUBGRADE), IF REQUIRED, WILL BE DETERMINED BY THE ENGINEER. SUCH EBS SHALL NOT BE USED TO BALANCE YARDAGE.

CROSS SECTIONS SHOWN INCLUDE THE THICKNESS OF TOPSOIL OR SALVAGED TOPSOIL WHERE REQUIRED. TOPSOIL SHALL BE PLACED A MINIMUM OF 4 INCHES IN DEPTH.

DISTURBED AREAS SHALL BE RESTORED BY DIRECTION OF ENGINEER WITH THE FOLLOWING FINISHING ITEMS: SALVAGED TOPSOIL, SEED, FERTILIZER AND MULCH. QUANTITIES FOR FINISHING ITEMS INCLUDE RESTORATION EXTENDING 3 FEET BEYOND THE SLOPE INTERCEPT SHOWN ON THE PLANS. DISTURBED AREAS SHALL HAVE FINISHING ITEMS APPLIED WITHIN 15 WORKING DAYS AFTER GRADING WORK IS COMPLETED.

NO TREES OR SHRUBS SHALL BE REMOVED WITHOUT APPROVAL OF THE ENGINEER.

THE CONTRACTOR SHALL NOTIFY DIGGERS HOTLINE AND AFFECTED UTILITIES PRIOR TO THE START OF WORK. ANY LOCAL MUNICIPALITY WHICH IS NOT A MEMBER OF DIGGERS HOTLINE MUST BE CONTACTED SEPARATELY.

PRIOR TO ORDERING DRAINAGE PIPES AND STRUCTURES, THE CONTRACTOR SHALL VERIFY DRAINAGE INFORMATION IN THE PLAN WITH THE ENGINEER.

INLET AND DISCHARGE ELEVATIONS FOR DRAINAGE STRUCTURES SHOWN ON THE PLAN MAY BE ADJUSTED BY THE ENGINEER TO FIT FIELD CONDITIONS.

CURB HEIGHTS AT THE END OF CURB AND GUTTER SHALL BE TAPERED FROM 0 TO 6 INCHES IN 10 FEET. CHANGES IN CURB TYPE AT MATCH POINTS SHALL TRANSITION OVER 10 FEET.

CURB AND GUTTER GRADES ARE GIVEN TO THE FLANGE LINE. CURB AND GUTTER RADII ARE MEASURED TO THE FACE OF CURB.

LOCATIONS AND ELEVATIONS OF STRUCTURES IN CURB AND GUTTER REFER TO FLOW LINE OF CURB.

LOCATIONS AND ELEVATIONS OF STRUCTURES NOT IN CURB AND GUTTER REFER TO CENTER OF COVER.

EXISTING DRIVEWAYS AND FIELD ENTRANCES SHALL BE RESTORED IN KIND AS DIRECTED BY THE ENGINEER IN THE FIELD AND AT THE LOCATIONS DETERMINED BY THE ENGINEER.

CONCRETE DRIVEWAY REMOVAL WILL BE PAID FOR AS REMOVING PAVEMENT.

TEMPORARY STORAGE OF ANY EXCAVATED MATERIAL WILL NOT BE PERMITTED IN WETLANDS.

TRAFFIC CONTROL DEVICES SHALL BE ADJUSTED TO FIT FIELD CONDITIONS, AS DIRECTED BY THE ENGINEER.

EROSION CONTROL DEVICES WILL BE PLACED IN SEQUENCE WITH CONSTRUCTION OPERATIONS OR AS DETERMINED BY THE ENGINEER.

EROSION CONTROL FEATURES AS SHOWN IN THE PLANS ARE AT SUGGESTED LOCATIONS. EXACT LOCATIONS WILL BE DETERMINED BY THE ENGINEER IN THE FIELD.

1/2-INCH FELT EXPANSION JOINT MATERIAL IS REQUIRED BETWEEN BACK OF CURB AND FRONT OF WALK OR DRIVEWAY APRON.

A SAWED OR MILLED JOINT IS REQUIRED WHERE HMA PAVEMENT MEETS EXISTING ASPHALTIC CONCRETE SURFACES.

SIGN LAYOUTS SHALL BE IN ACCORDANCE WITH THE FEDERAL HIGHWAY ADMINISTRATION MANUAL ON UNIFORM TRAFFIC CONTROL DEVICES (MUTCD).

EXISTING INLET AND MANHOLE COVERS THAT ARE NOT REQUIRED TO BE REUSED ON THE PROJECT SHALL BECOME THE PROPERTY OF THE MUNICIPALITY.

MUNICIPAL-OWNED STREET SIGNS WILL BE REMOVED, STORED, AND REINSTALLED BY THE MUNICIPALITY.

HMA PAVEMENT WILL BE CONSTRUCTED WITH THE FOLLOWING LAYERS AND GRADATIONS:

4.5-INCH HMA PAVEMENT TYPE E-1
2.5-INCH LOWER LAYER (19.0MM GRADATION, PG64-22)
2.0-INCH UPPER LAYER (12.5MM GRADATION, PG64-28)

3.0-INCH HMA PAVEMENT TYPE E-1
3.0-INCH LAYER (12.5MM GRADATION, PG64-28)

2

2

UTILITY CONTACTS

TO OBTAIN LOCATION OF
PARTICIPANTS' UNDERGROUND
FACILITIES BEFORE YOU
DIG IN WISCONSIN

WIS. STATUTE 182.0175 (1974)
REQUIRES MIN. OF 3 WORK DAYS
NOTICE BEFORE YOU EXCAVATE.

DIGGERS HOTLINE

Call 811 3 Work Days Before You Dig
or Toll Free (800) 242-8511
Hearing Impaired TDD (800) 542-2289
www.DiggersHotline.com

WE ENERGIES-GAS & ELECTRIC

MR. DAN SANDE
333 WEST EVERETT ST A279
MILWAUKEE, WI 53203
414-221-4578
dan.sande@we-energies.com

TIME WARNER CABLE

MR. STEVE CRAMER
1320 NORTH MARTIN LUTHER KING DRIVE
MILWAUKEE, WI 53212
414-277-4045
steve.cramer@twcable.com

TW TELECOM

MR. BRAHIM GADDOUR
3235 INTERTECH DR, SUITE 600
BROOKFIELD, WI 53045
414-704-1026
brahim.gaddour@twtelecom.com

AT&T WISCONSIN

MR. TOM CROWLEY
2005 PEWAUKEE RD
WAUKESHA, WI 53188
262-896-7427
tc1657@att.com

TRAFFIC SIGNALS

MR. GARY EVANS
WAUKESHA COUNTY HIGHWAY ENGINEERING MANAGER
515 W MORELAND BLVD
WAUKESHA, WI 53188
262-548-7740
GEvans@waukeshacounty.gov

NEW BERLIN UTILITIES

MR. JIM HART
UTILITY MANAGER
3805 S CASPER DR
NEW BERLIN, WI 53151
262-786-7086
nbutilities@newberlin.org

OTHER CONTACTS

2

CITY OF NEW BERLIN POLICE DEPARTMENT

16300 W NATIONAL AVE
NEW BERLIN, WI 53151
262-782-6640

WAUKESHA COUNTY SHERIFF DEPARTMENT

515 W MORELAND BLVD
WAUKESHA, WI 53187
262-548-7126

WISCONSIN DEPARTMENT OF NATURAL RESOURCES AREA LIAISON

MR. CRAIG WEBSTER
WISCONSIN DNR, SOUTHEAST REGION
141 NW BARSTOW ST ROOM 180
WAUKESHA, WI 53188
262-574-2141
craig.webster@wisconsin.gov

CITY OF NEW BERLIN CITY ENGINEER

MR. JP WALKER
3805 S CASPER DR
NEW BERLIN, WI 53151
262-797-2453
jwalker@newberlin.org

KAPUR & ASSOCIATES, INC.

MR. KURT FARRENKOPF
7711 N PORT WASHINGTON RD
MILWAUKEE, WI 53217
414-351-6668
kfarrenkopf@kapur-assoc.com

DESIGN INDEX

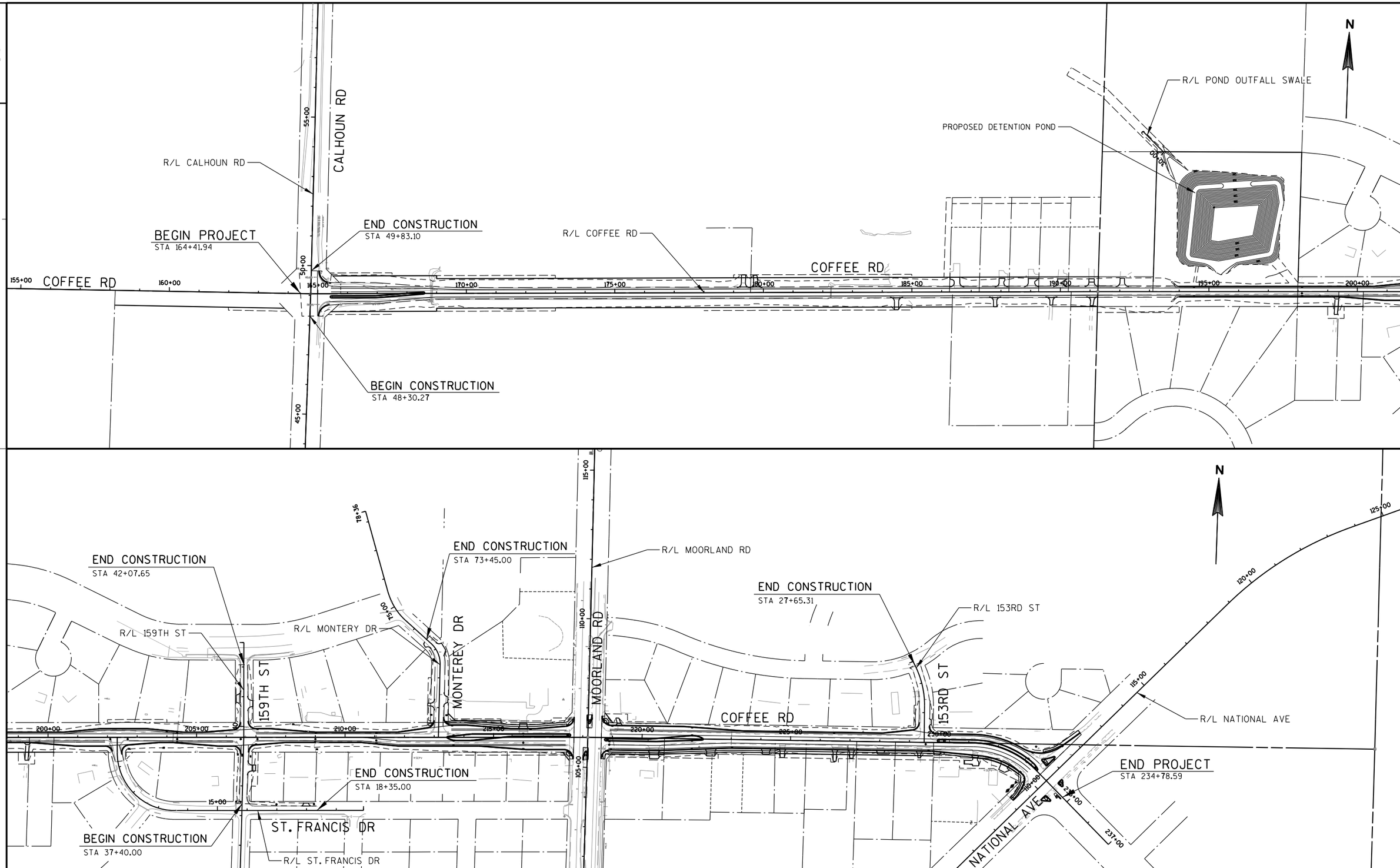

PROJECT NO: 2722-10-70	HWY: COFFEE ROAD	COUNTY: WAUKESHA	PROJECT OVERVIEW	SHEET 4	E

FILE NAME : S:\Wauk_Co\NewBerlin\Gov\08.0099 Coffee Rd\Design\020201_PO.dgn PLOT DATE : 10/30/2013 PLOT BY : Nick_B PLOT NAME : PLOT SCALE : 1:300

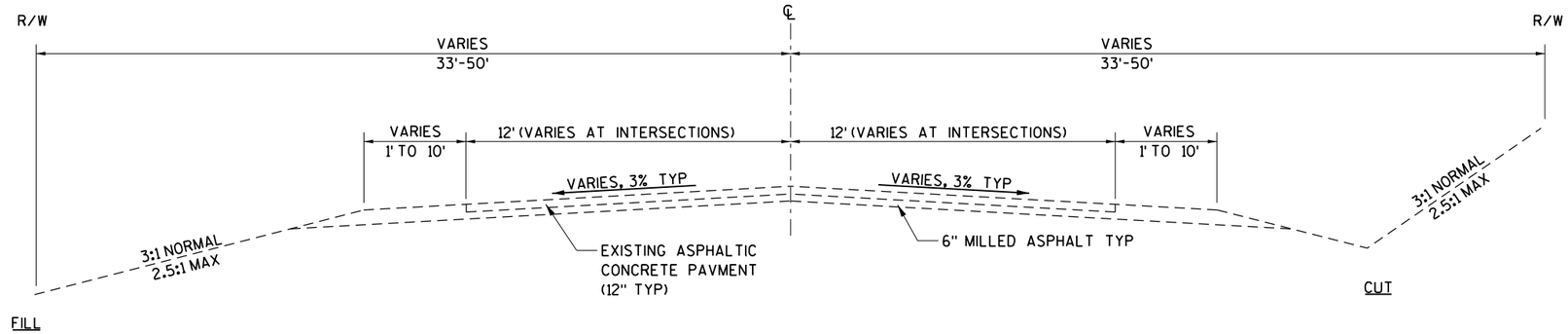

TYPICAL EXISTING SECTION

COFFEE ROAD
STA 164+98.95 TO STA 233+69.14

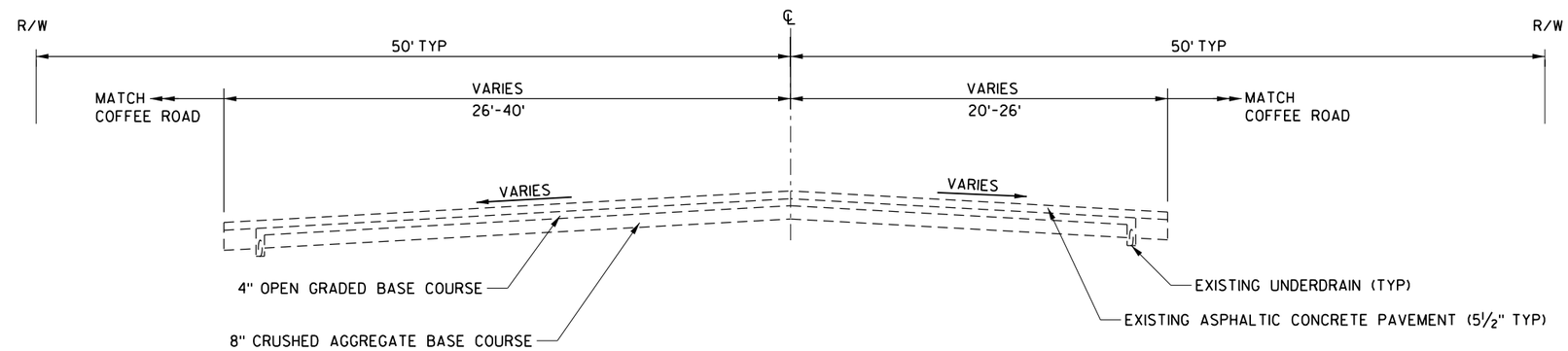

TYPICAL EXISTING SECTION

CALHOUN ROAD
STA 48+30.27 TO STA 49+83.10

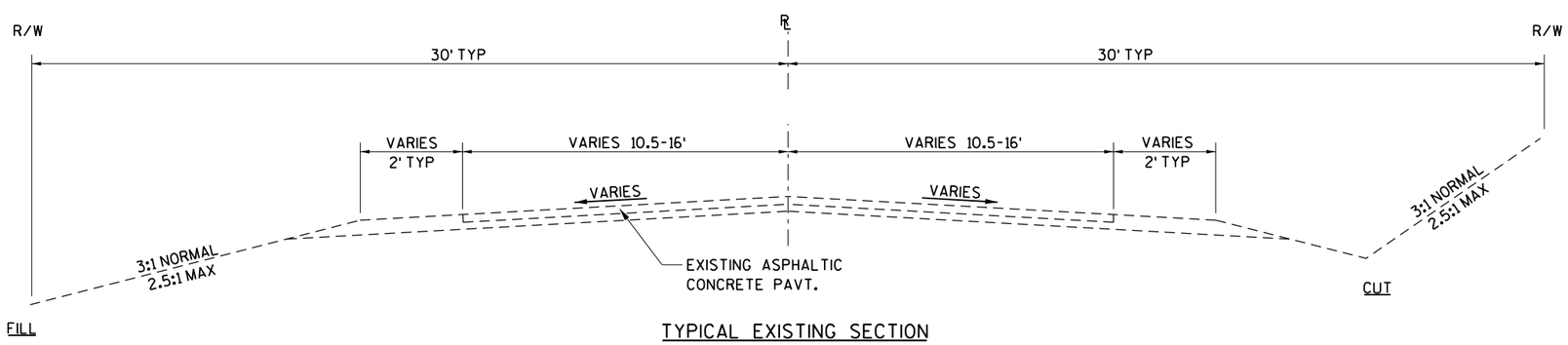

TYPICAL EXISTING SECTION

ST. FRANCIS DR STA 10+25.00 TO STA 10+81.45
159TH ST STA 37+40.00 TO STA 39+37.12, STA 39+89.16 TO STA 42+07.65
MONTEREY DR STA 70+34.80 TO STA 73+45.00
153RD ST STA 25+34.00 TO STA 27+65.31

PROJECT NO: 2722-10-70	HWY: COFFEE ROAD	COUNTY: WAUKESHA	TYPICAL SECTION	SHEET 5	E

2

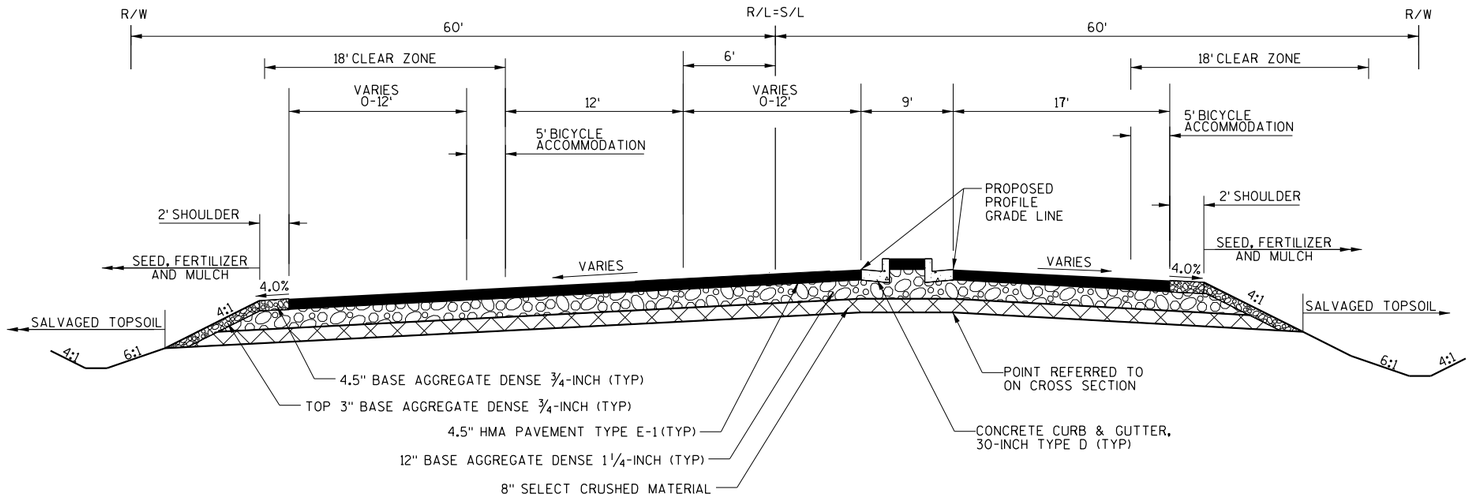

PAVEMENT SLOPE

	LT	RT
STA 164+98.95	1.2% ↙	1.6% ↘
STA 165+00	1.2% ↙	1.6% ↘
STA 165+50	1.5% ↙	2.0% ↘
STA 166+50		3.0% ↘
STA 167+00	3.0% ↙	
STA 168+60.61	3.0% ↙	3.0% ↘

TYPICAL FINISHED SECTION - COFFEE ROAD

STA 164+98.95 TO STA 168+60.61

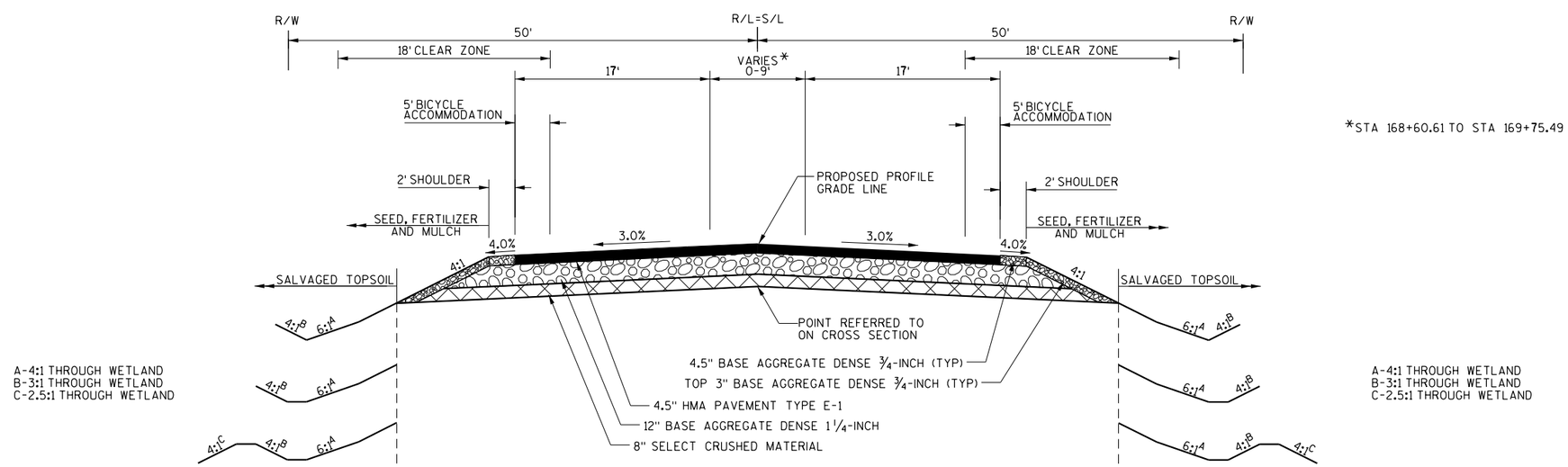

*STA 168+60.61 TO STA 169+75.49

TYPICAL FINISHED SECTION - COFFEE ROAD

STA 168+60.61 TO STA 194+00.00

PROJECT NO: 2722-10-70	HWY: COFFEE ROAD	COUNTY: WAUKESHA	TYPICAL FINISHED SECTIONS	SHEET 6	E

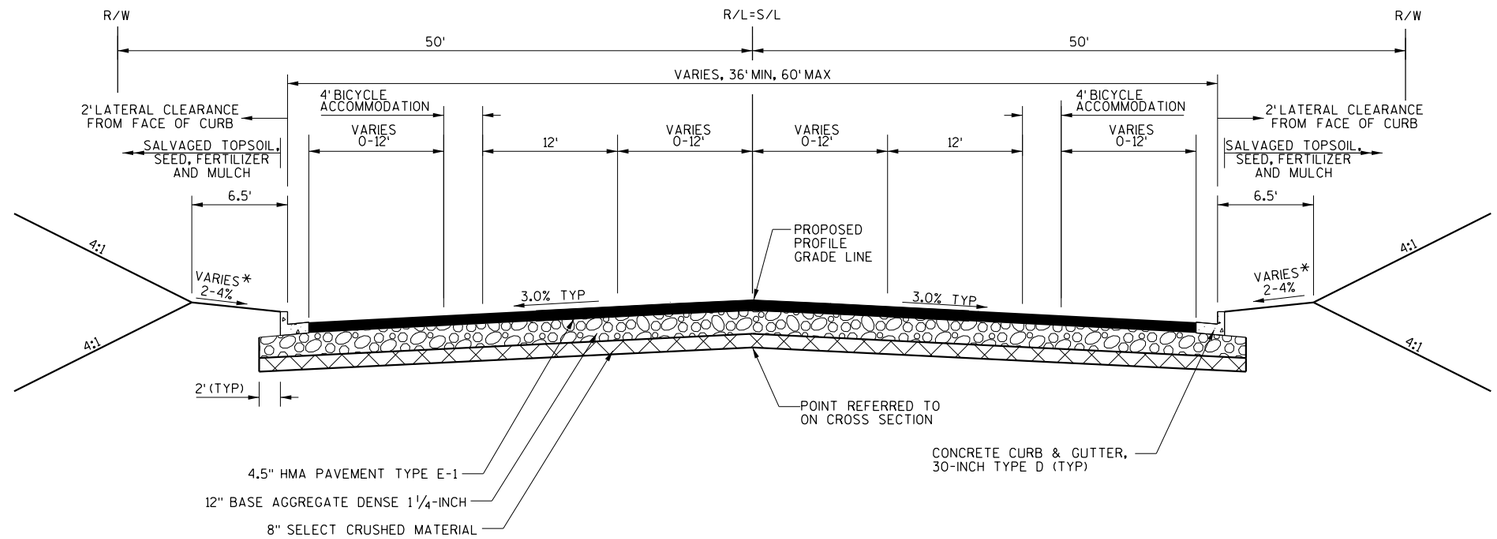

* 4% STA 194+00 TO STA 206+50.00
2% STA 206+50 TO STA 213+42.18

PAVEMENT SLOPE

	LT	RT
STA 194+00	3.0% ↙	3.0% ↘
STA 204+50	3.0% ↙	3.0% ↘
STA 206+50	1.0% ↙	1.0% ↘
STA 207+00	1.0% ↙	1.0% ↘
STA 209+00	3.0% ↙	3.0% ↘
STA 211+00	3.0% ↙	
STA 213+00	1.0% ↙	
STA 213+42.18	1.0% ↙	3.0% ↘

TYPICAL FINISHED SECTION - COFFEE ROAD

STA 194+00.00 TO STA 213+42.18

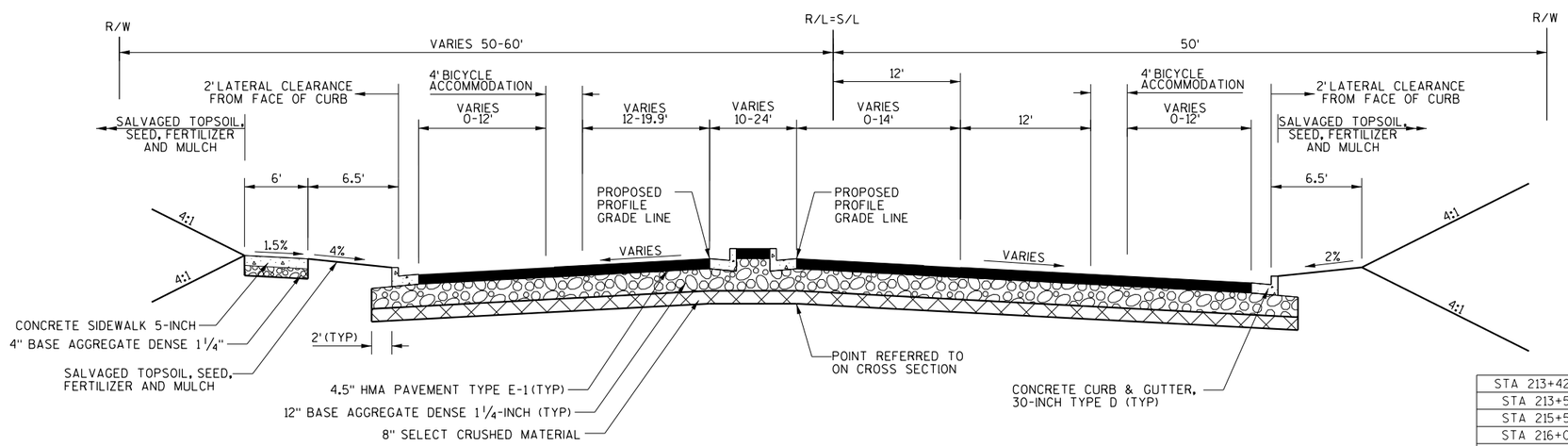

PAVEMENT SLOPE

	LT	RT
STA 213+42.18	1.0% ↙	3.0% ↘
STA 213+50	1.0% ↙	
STA 215+50	3.0% ↙	
STA 216+00		3.0% ↘
STA 217+50	1.0% ↙	1.5% ↘
STA 217+72.38	0.7% ↙	1.25% ↘

TYPICAL FINISHED SECTION - COFFEE ROAD

STA 213+42.18 TO STA 217+72.38

PROJECT NO: 2722-10-70	HWY: COFFEE ROAD	COUNTY: WAUKESHA	TYPICAL FINISHED SECTIONS	SHEET 7	E

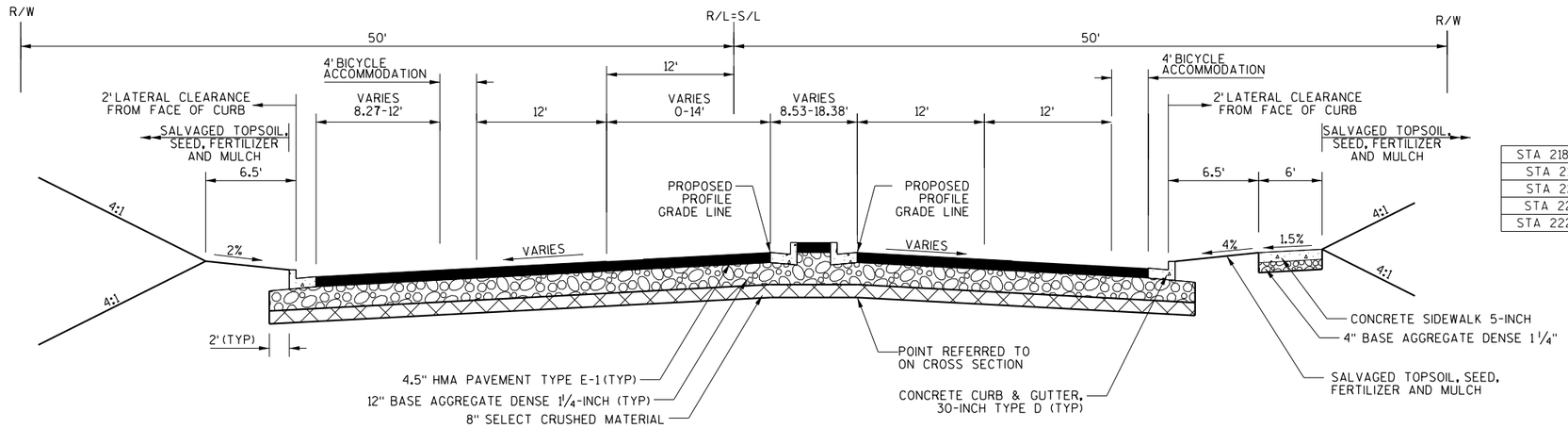

PAVEMENT SLOPE

	LT	RT
STA 218+60.69	0.5% ↗	1.25% ↘
STA 219+00	1.0% ↗	1.0% ↘
STA 221+00	3.0% ↗	1.0% ↘
STA 222+00		2.0% ↘
STA 222+10.43	3.0% ↗	2.0% ↘

TYPICAL FINISHED SECTION - COFFEE ROAD

STA 218+60.69 TO STA 222+02.77

*STA 222+02.77 TO STA 223+40.67
**STA 222+02.77 TO STA 222+93.75

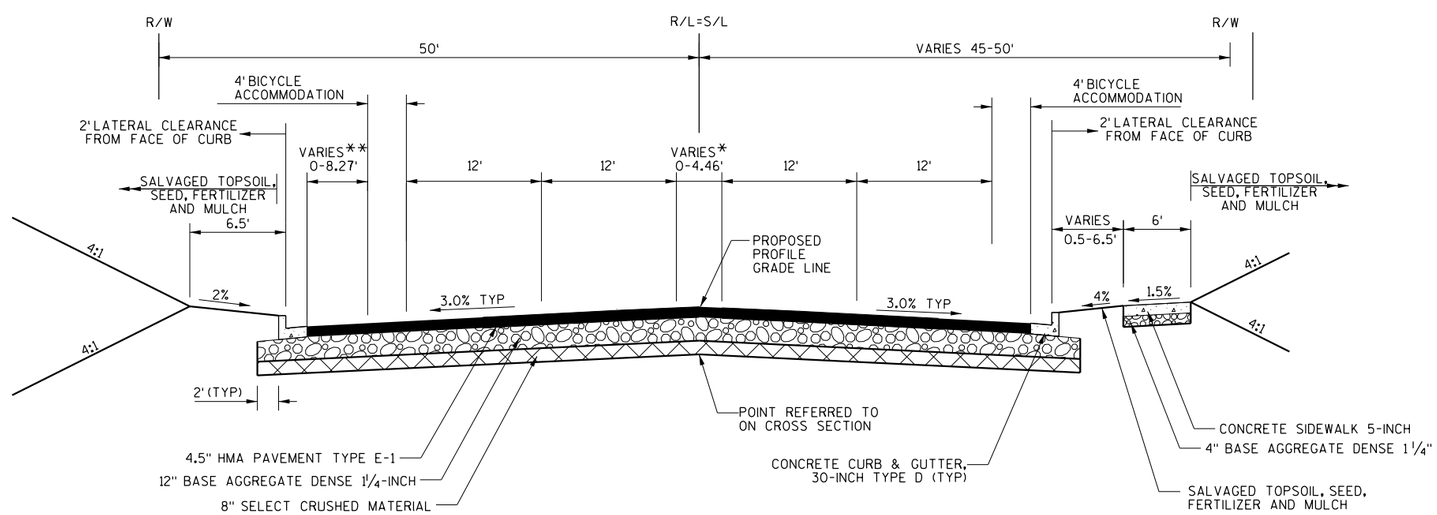

PAVEMENT SLOPE

	LT	RT
STA 223+40.67	3.0% ↗	2.9% ↘
STA 223+50		3.0% ↘
STA 227+00	3.0% ↗	
STA 228+50		3.0% ↘
STA 229+00	1.0% ↗	
STA 229+81.01	1.0% ↗	1.69% ↘

TYPICAL FINISHED SECTION - COFFEE ROAD

STA 222+02.77 TO STA 229+81.01

PROJECT NO: 2722-10-70	HWY: COFFEE ROAD	COUNTY: WAUKESHA	TYPICAL FINISHED SECTIONS	SHEET 8	E

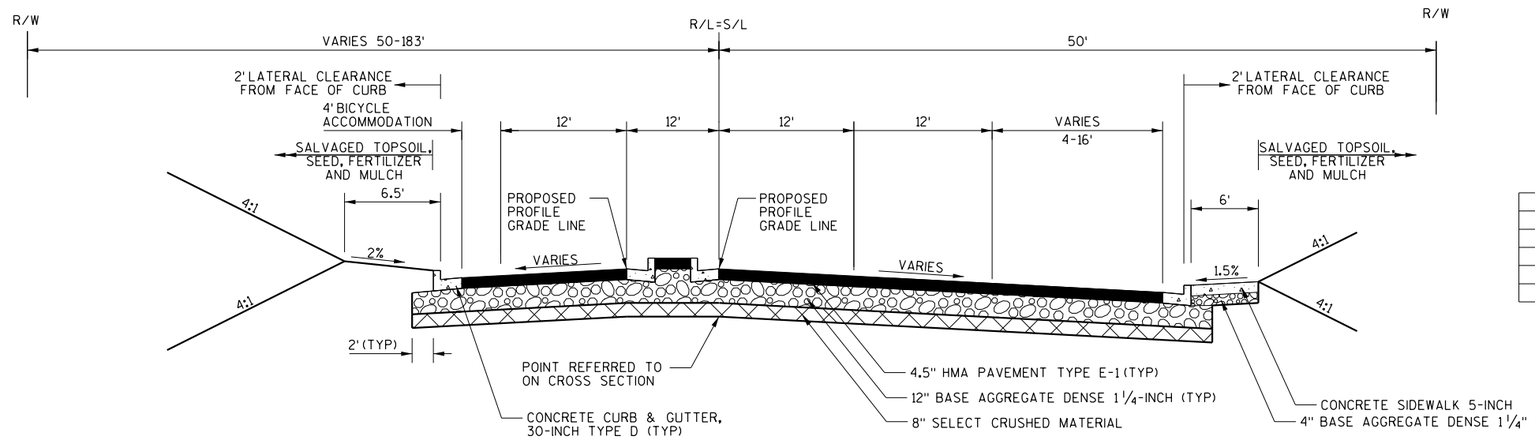

PAVEMENT SLOPE

	LT	RT
STA 229+81.01	1.0% ↙	1.69% ↘
STA 230+00	1.0% ↙	
STA 231+50	3.0% ↙	
STA 232+00	3.0% ↘	
STA 233+50	3.0% ↙	2.0% ↙
STA 233+69.14	3.0% ↙	2.0% ↙

TYPICAL FINISHED SECTION - COFFEE ROAD

STA 229+81.01 TO STA 233+69.14

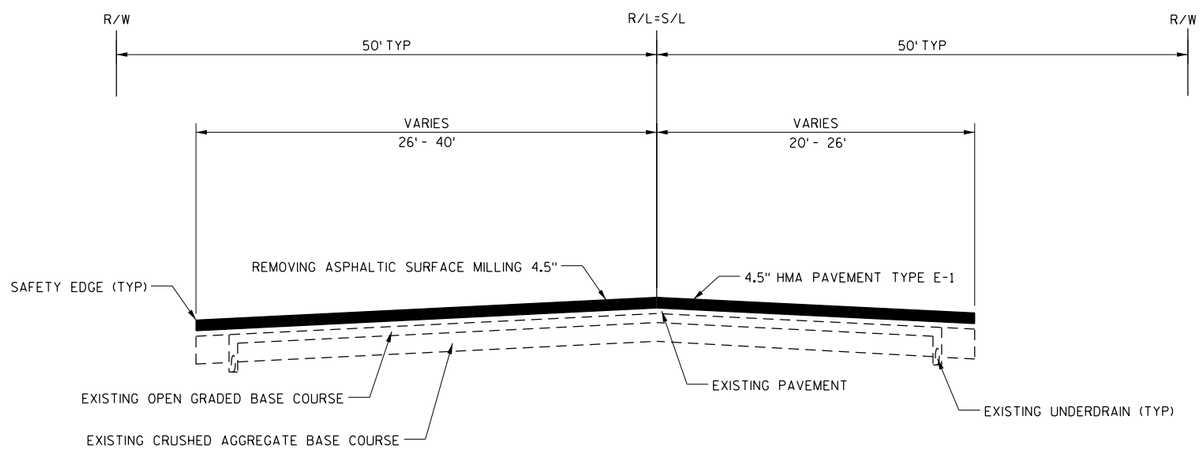

TYPICAL FINISHED SECTION - CALHOUN ROAD

STA 48+30.27 TO STA 49+83.10

PROJECT NO: 2722-10-70	HWY: COFFEE ROAD	COUNTY: WAUKESHA	TYPICAL FINISHED SECTIONS	SHEET 9	E

FILE NAME : S:\Wauk_Co\NewBerlin\Gov\08.0099 Coffee Rd\Design\020310_TS.dgn PLOT DATE : 10/30/2013 PLOT BY : Nick_B PLOT NAME : PLOT SCALE : 1:2 WISDOT/CADDS SHEET 42

2

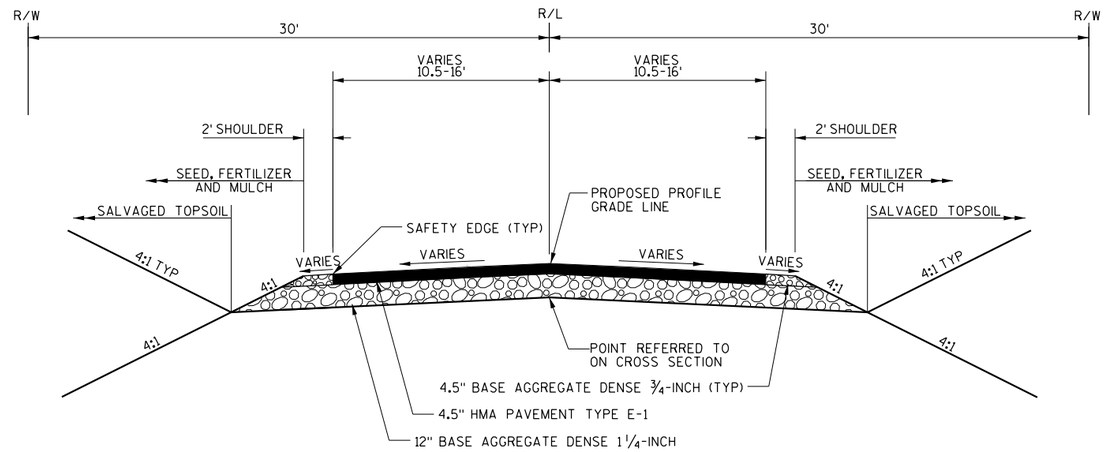

TYPICAL FINISHED SECTION

ST. FRANCIS DR STA 10+25.00 TO STA 10+81.45
159TH ST STA 37+40.00 TO STA 39+37.12, STA 39+89.16 TO STA 42+07.65
MONTEREY DR STA 70+34.80 TO STA 73+45.00
153RD ST STA 25+34.00 TO STA 26+40.00

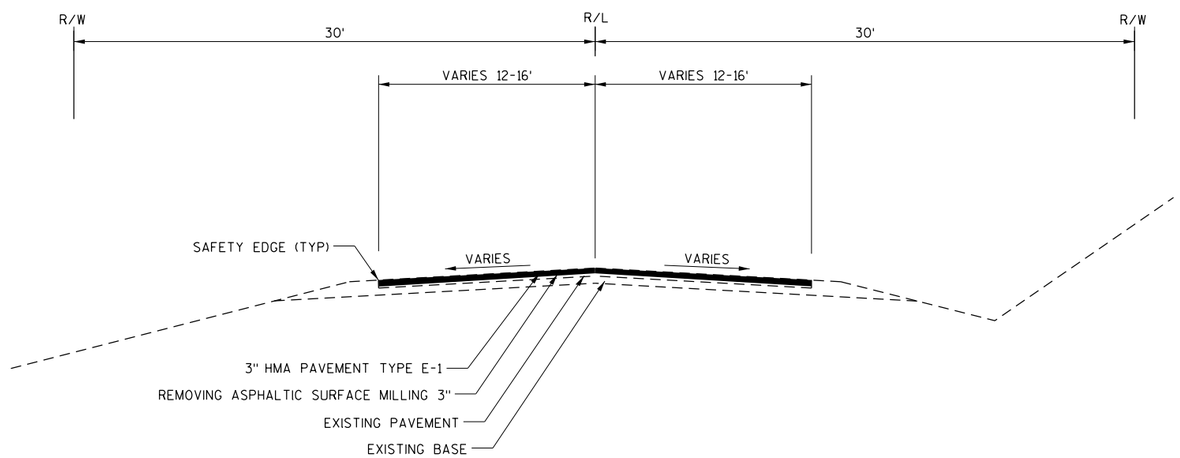

TYPICAL FINISHED SECTION - 153RD ST

STA 26+40.00 TO STA 27+65.31

PROJECT NO: 2722-10-70	HWY: COFFEE ROAD	COUNTY: WAUKESHA	TYPICAL FINISHED SECTIONS	SHEET 10	E

FILE NAME : S:\Wauk_Co\NewBerlin\Gov\08.0099 Coffee Rd\Design\020310_TS.dgn PLOT DATE : 10/30/2013 PLOT BY : Nick_B PLOT NAME : PLOT SCALE : 1:2

WISDOT/CADDS SHEET 42

2

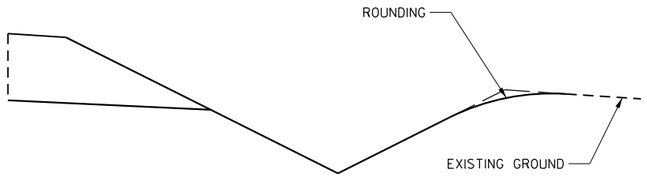

IN CUT

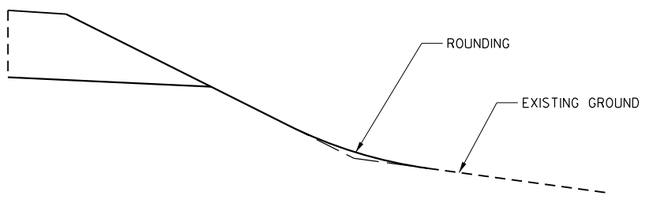

IN FILL

SLOPE ROUNDING DETAIL

NOTE:
LIMITS TO BE DETERMINED BY ENGINEER IN FIELD.

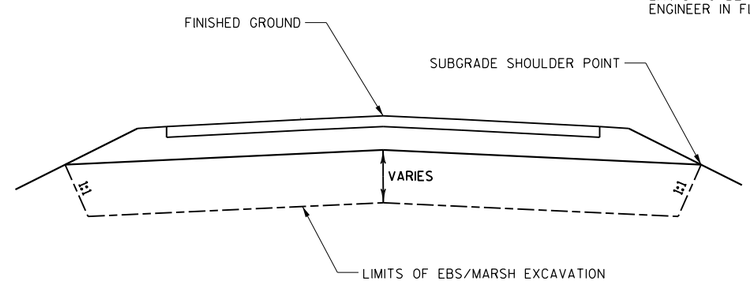

CROSS SECTION

EXCAVATION BELOW SUBGRADE (EBS) OR MARSH EXCAVATION

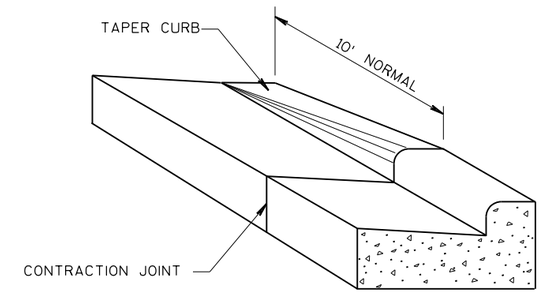

DETAIL OF CURB & GUTTER TERMINI

2

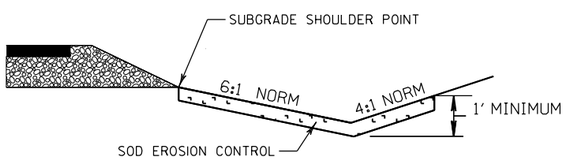

SOD DETAIL FOR DITCHES

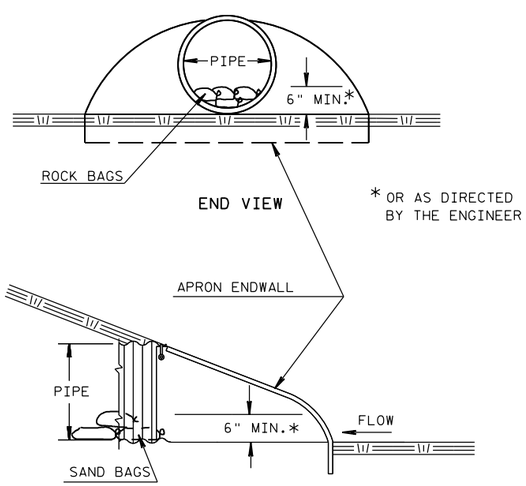

CULVERT PIPE CHECK

(INSTALL ON INLET END ONLY)

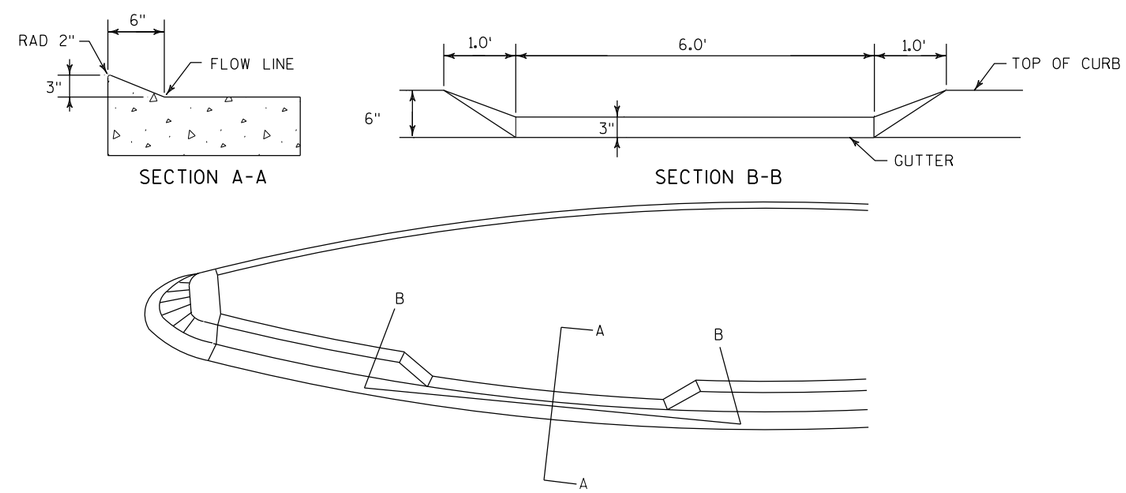

MAINTENANCE RAMP

INSTALL AS DIRECTED BY ENGINEER

PROJECT NO: 2722-10-70	HWY: COFFEE ROAD	COUNTY: WAUKESHA	CONSTRUCTION DETAILS	SHEET 11	E

2

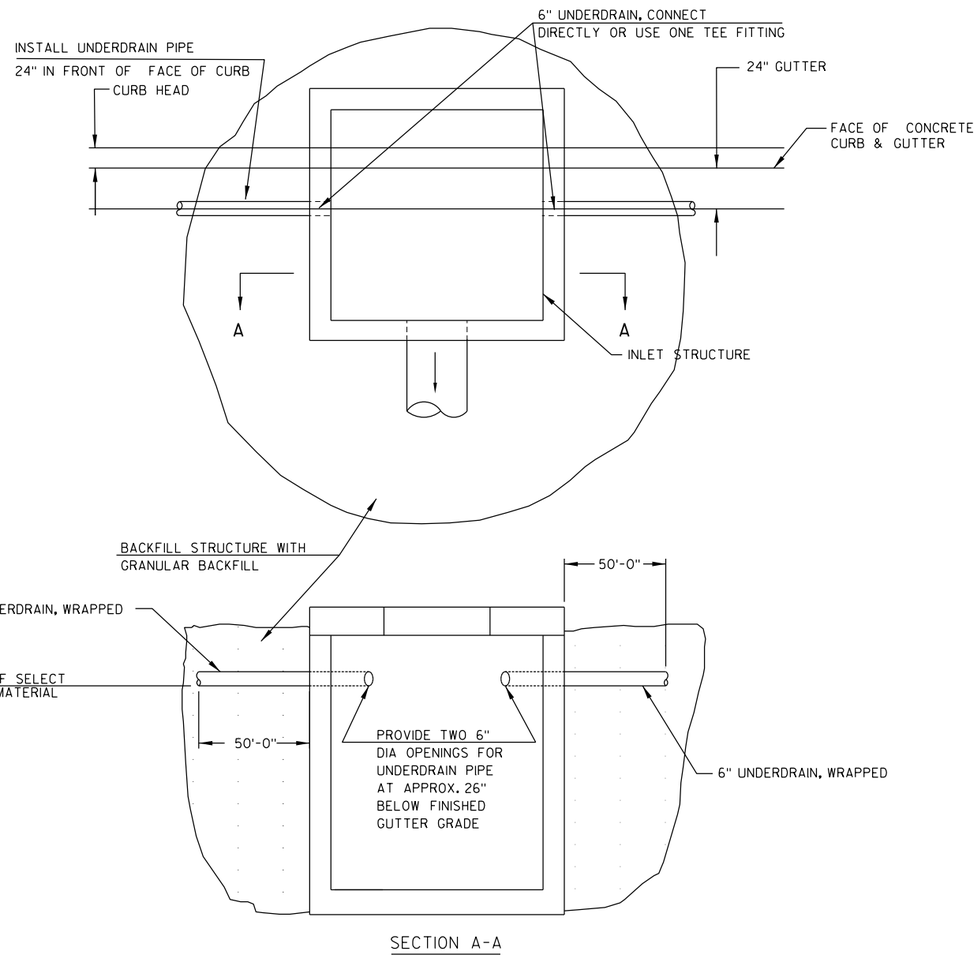

SECTION A-A

UNDERDRAIN & INLET DETAIL

INSTALL AT STRUCTURES 34.1, 34.2, 34.3 AND 34.4

NOTE:

CONSULT ENGINEER IN FIELD.

2

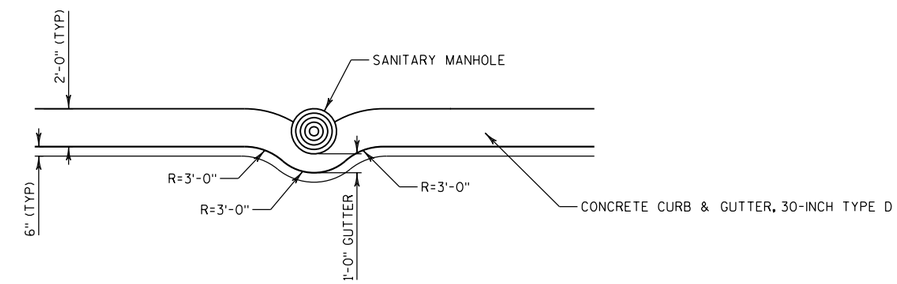

SANITARY MANHOLE/CURB CONFLICT DETAIL AT STA 221+16, 39' RT

NOTE:

CONSULT ENGINEER IN FIELD.

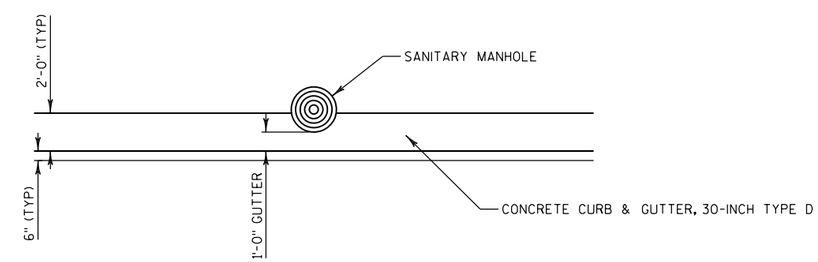

SANITARY MANHOLE/CURB CONFLICT DETAIL AT STA 231+57, 40' RT

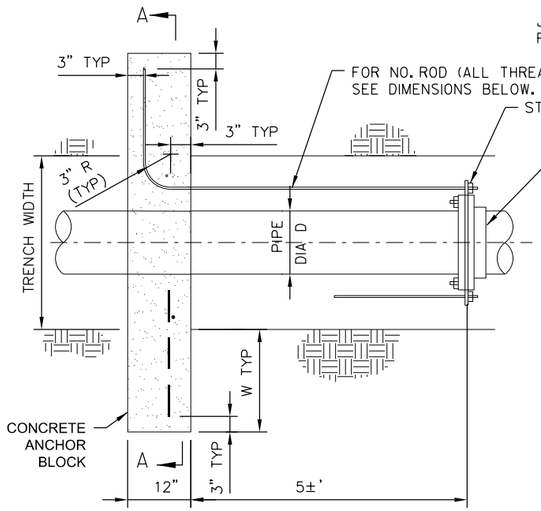

JOINT RESTRAINT MATERIAL BY STAR PIPE PRODUCTS OR APPROVED EQUAL

FOR NO. ROD (ALL THREAD) SEE DIMENSIONS BELOW.

STARLUG ROD RESTRAINT OR PIGTAIL BOLTS

MECHANICAL RESTRAINED JOINT (MEGA -LUG) VALVE OR FITTING.

NOTES:

1. ANCHOR BLOCK CONCRETE SHALL BE CLASS 560-C-3250 (3250 PSI AT 28 DAY). (MIN. 72 HOURS CURING TIME), POURED AGAINST UNDISTURBED EARTH.

2. ALL STEEL RODS, BOLTS, ETC. IN CONTACT WITH THE SOIL SHALL BE COATED WITH BITUMASTIC OR APPROVED EQUAL.

3. DIMENSIONS ARE BASED ON $1\frac{59}{64}$ TIMES STATIC WATER PRESSURE, 2000 PSF SOIL PRESSURE AND AND 60,000 LB/SQ.-IN. BAR TENSILE STRENGTH.

PLAN

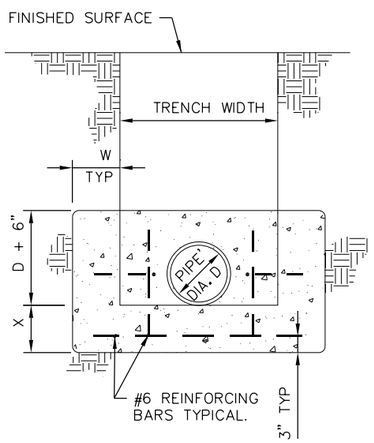

SECTION A-A

ANCHOR BLOCK DIMENSIONS

		STATIC WATER PRESSURE P.S.I.									
D	VARIABLE	60	70	80	90	100	110	120	130	140	150
4" & 6"	AREA (SQ.FT.)	1.1	1.3	1.5	1.7	1.9	2.1	2.3	2.6	2.8	3.0
	W (INCH)	10	10	10	10	12	12	14	14	16	16
	X (INCH)	0	0	0	0	0	0	0	0	0	0
	NO. ROD	2	2	2	2	2	2	2	2	2	2
8"	AREA (SQ.FT.)	1.8	2.2	2.6	3.0	3.4	3.7	4.1	4.5	4.9	5.0
	W (INCH)	10	12	14	15	18	10	12	13	15	16
	X (INCH)	0	0	0	0	0	6	6	6	6	6
	NO. ROD	2	2	2	2	2	2	2	2	2	2
10"	AREA (SQ.FT.)	2.9	3.5	4.1	4.7	5.3	5.9	6.5	7.1	7.6	6.2
	W (INCH)	12	15	18	13	15	16	18	16	18	18
	X (INCH)	0	0	0	6	6	6	6	9	9	12
	NO. ROD	2	2	2	2	2	2	3	3	3	3
12"	AREA (SQ.FT.)	4.2	5.1	5.9	6.8	7.6	8.5	9.3	10.2	11.0	11.9
	W (INCH)	18	12	15	18	16	18	18	18	18	18
	X (INCH)	0	6	6	6	9	9	12	14	16	18
	NO. ROD	2	2	2	3	3	3	4	4	4	4
16"	AREA (SQ.FT.)	8.0	9.1	10.2	11.1	12.0	13.9	14.0	14.5	15.1	11.9
	W (INCH)	18	20	20	22	22	24	24	24	24	24
	X (INCH)	6	6	8	8	12	14	16	20	22	24
	NO. ROD	3	3	3	4	4	4	5	5	5	5

REVERSE TIE ANCHOR BLOCK ASSEMBLY

SCALE: N.T.S.

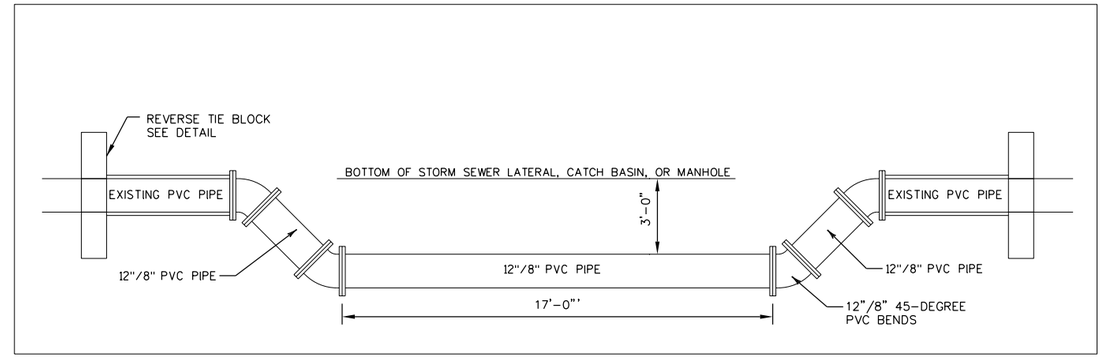

WATER MAIN OFFSET DETAIL

SCALE: N.T.S.
202+31.68 12"
206+71.43 12"
37+45.74 8"
39+57.45 8"

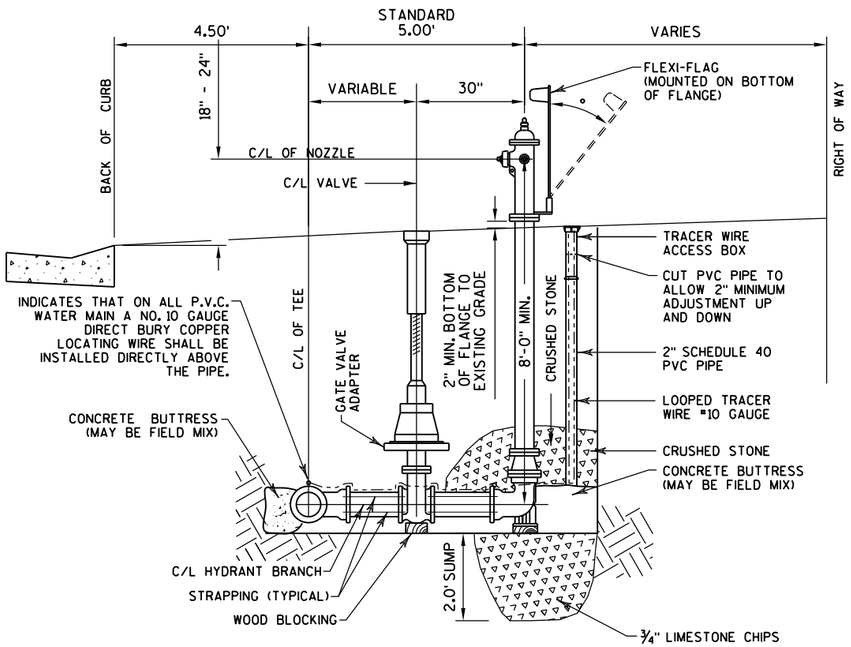

TYPICAL HYDRANT SETTING - SECTION

NOT TO SCALE

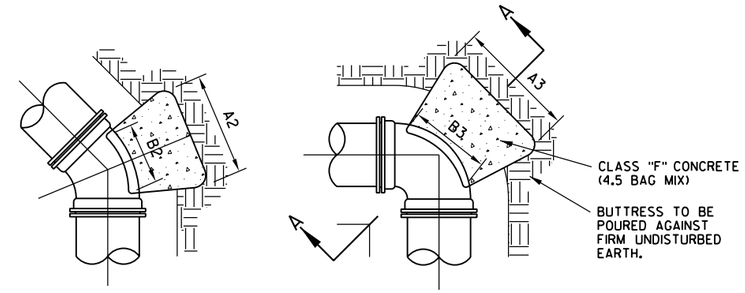

PLAN 45° BEND

PLAN 90° BEND

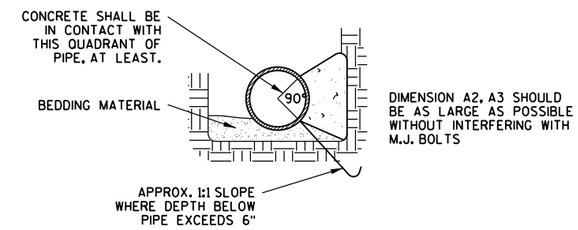

SECTION A-A

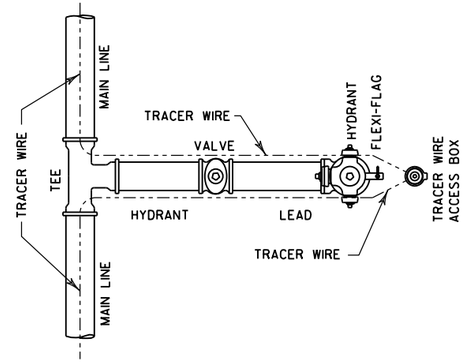

TRACER WIRE DETAIL

NOT TO SCALE

NOTE:
STRAP HYDRANT TO VALVE & STRAP VALVE TO TEE. USE 3/4" STRAPS (BARS) OR MEGALUG RESTRAINING GLANDS ON ALL MECHANICAL JOINTS. THE BOLTS & NUTS ARE TO BE HIGH STRENGTH LOW ALLOY STEEL (CORTEN) AS PER SECTION 11.6.5 OF A.W.W.A. C-111.

PIPE	22 1/2° BENDS		45° BENDS		90° BENDS	
SIZE	A1	B1	A2	B2	A3	B3
6"	1'-0"	1'-0"	1'-0"	1'-0"	1'-4"	1'-2"
8"	1'-0"	1'-0"	1'-4"	1'-2"	1'-10"	1'-6"
12"	1'-4"	1'-4"	1'-10"	1'-10"	2'-8"	2'-3"
16"	1'-10"	1'-8"	2'-6"	2'-4"	3'-10"	2'-10"
20"	2'-4"	2'-0"	3'-3"	2'-10"	5'-0"	3'-4"
24"	2'-10"	2'-4"	4'-0"	3'-3"	6'-4"	3'-10"
30"	3'-6"	3'-0"	5'-4"	3'-10"	8'-0"	4'-8"

THRUST BLOCK DETAIL

NOT TO SCALE

2

NOTES:

DRIVEWAY SURFACE TO MATCH EXISTING.

ASPHALT - 3" ASPHALTIC SURFACE DRIVEWAYS AND FIELD ENTRANCES OVER 6" BASE AGGREGATE DENSE 1 1/4-INCH

CONCRETE - 7" CONCRETE DRIVEWAY HES OVER 4" BASE AGGREGATE DENSE 1 1/4-INCH

CABC - 6" BASE AGGREGATE DENSE 3/4-INCH

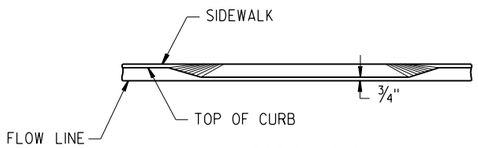

SECTION C-C

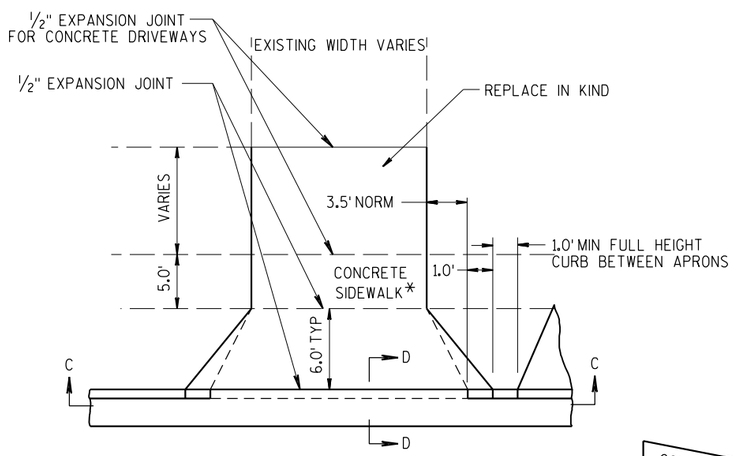

*SEE PLANSHEETS FOR CONCRETE SIDEWALK LOCATION

PLAN

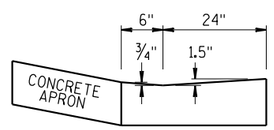

SECTION D-D

CONCRETE GUTTER DETAIL AT DRIVEWAYS

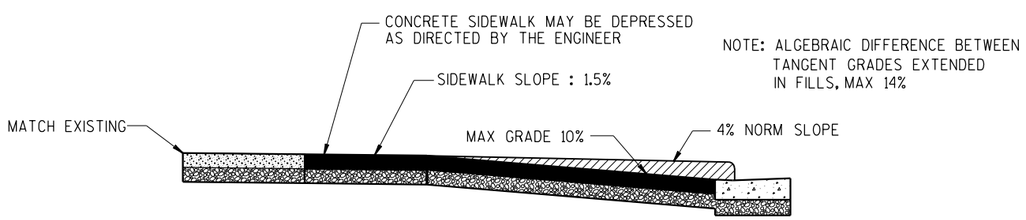

NOTE: ALGEBRAIC DIFFERENCE BETWEEN TANGENT GRADES EXTENDED IN FILLS, MAX 14%

PROFILE

URBAN DRIVEWAY DETAIL

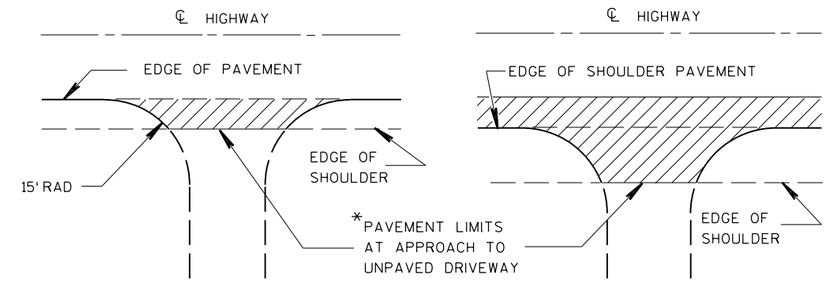

*WHERE DRIVEWAY IS PAVED, APPROACH PAVEMENT SHOULD BE EXTENDED TO MATCH DRIVEWAY PAVEMENT.

PLAN VIEW

PLAN VIEW
(PAVED SHOULDER ON HIGHWAY)

RURAL DRIVEWAY INTERSECTION DETAIL

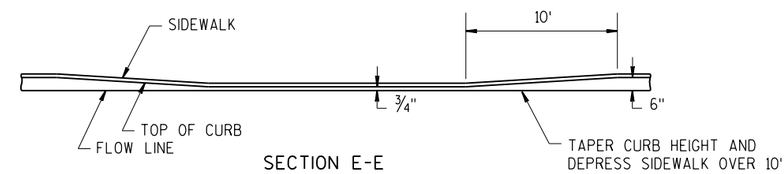

SECTION E-E

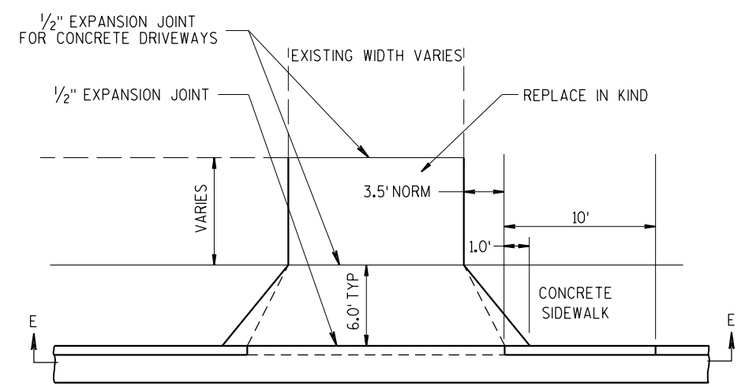

PLAN

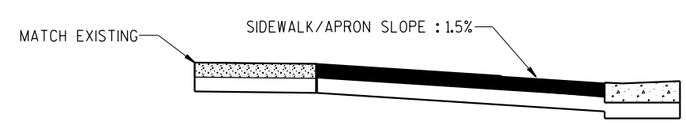

PROFILE

URBAN DRIVEWAY DETAIL WITH COMMERCIAL WALK

2

PROJECT NO: 2722-10-70	HWY: COFFEE ROAD	COUNTY: WAUKESHA	CONSTRUCTION DETAILS	SHEET 15	E

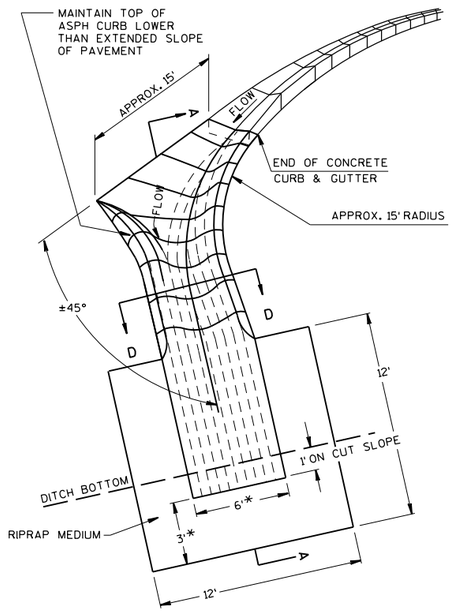

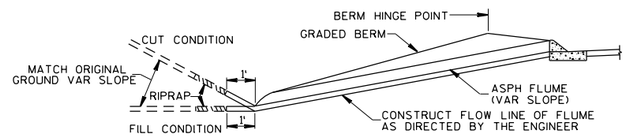

SECTION A-A

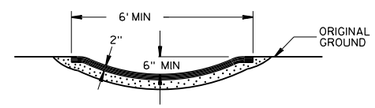

SECTION D-D

NOTE: DIMENSIONS MAY BE ADJUSTED BY ENGINEER IN FIELD

ASPHALTIC FLUME DETAIL

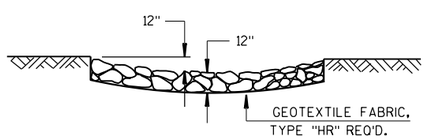

SECTION B-B

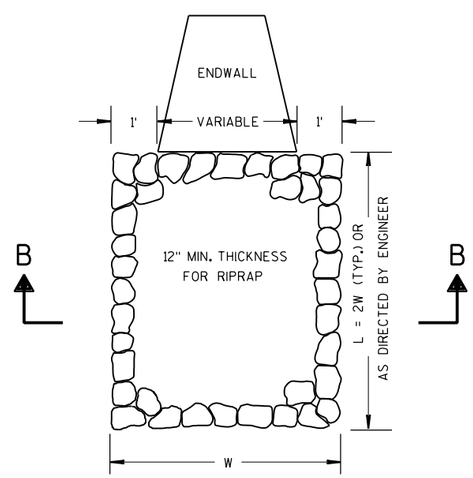

RIPRAP TREATMENT AT CULVERTS

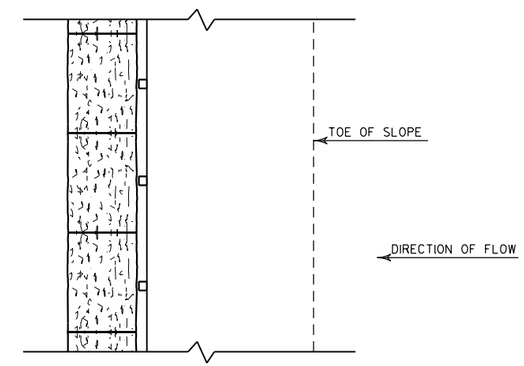

PLAN VIEW

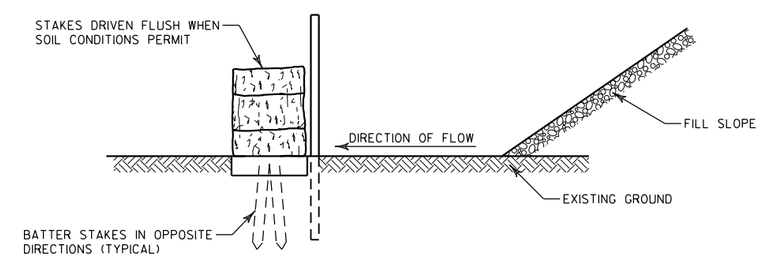

ELEVATION
WHEN EXISTING GROUND SLOPES AWAY FROM FILL SLOPES

SILT FENCE IN FRONT OF EROSION BALES DETAIL

2

NOTE:
POND AND SWALE AREA TO BE RESTORED WITH 4-INCH SALVAGED TOPSOIL, SEEDING MIXTURE NO. 75, FERTILIZER TYPE B, SOIL STABILIZER TYPE B AND MULCH

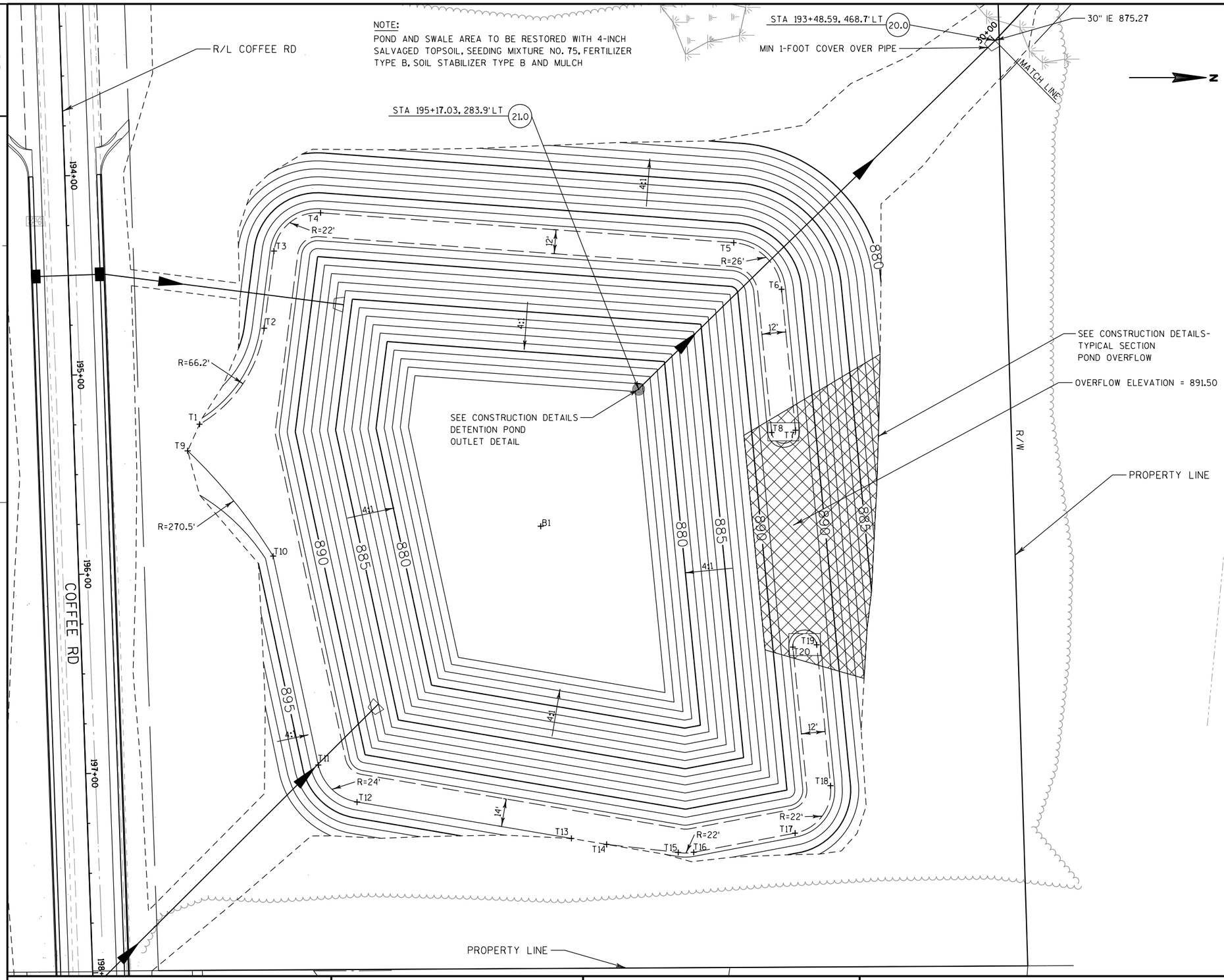

NOTE:
SWALE AREA TO BE FIELD STAKED. NO CLEARING AND GRUBBING SHALL TAKE PLACE OUTSIDE THE SLOPE INTERCEPTS. RESTORATION SHALL BE COMPLETED WITHIN 5 DAYS OF ANY DISTURBANCE.

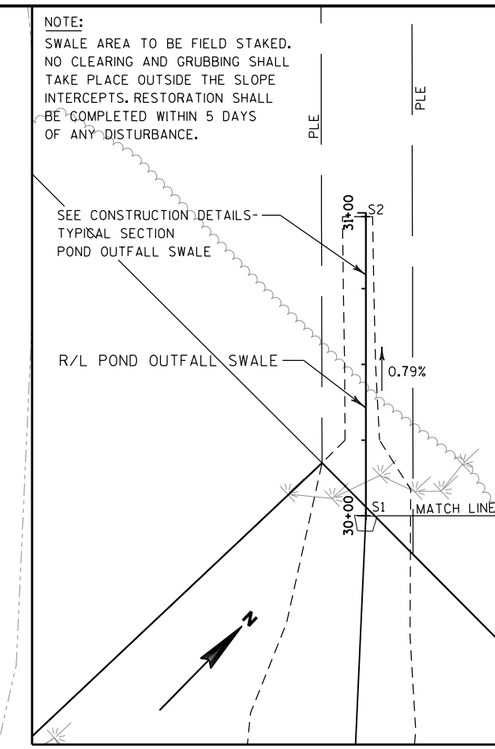

2

DETENTION POND POINTS				
POINT #	NORTHING	EASTING	ELEV	DESCRIPTION
T1	363261.46	2504095.85	892.5	TOP SLOPE
T2	363293.89	2504047.69	892.5	TOP SLOPE
T3	363298.82	2504008.98	892.5	TOP SLOPE
T4	363322.22	2503989.82	892.5	TOP SLOPE
T5	363529.40	2504004.80	892.5	TOP SLOPE
T6	363553.40	2504028.17	892.5	TOP SLOPE
T7	363560.37	2504098.82	892.5	TOP SLOPE
T8	363548.43	2504100.00	892.5	TOP SLOPE
T9	363255.51	2504109.17	893.0	TOP SLOPE
T10	363298.38	2504161.98	893.0	TOP SLOPE
T11	363321.03	2504266.70	893.0	TOP SLOPE
T12	363340.47	2504285.28	893.0	TOP SLOPE
T13	363447.98	2504303.53	893.0	TOP SLOPE
T14	363465.63	2504306.53	892.5	TOP SLOPE
T15	363501.53	2504310.59	892.5	TOP SLOPE
T16	363509.30	2504310.52	892.5	TOP SLOPE
T17	363560.17	2504300.89	892.5	TOP SLOPE
T18	363577.97	2504277.11	892.5	TOP SLOPE
T19	363570.99	2504206.46	892.5	TOP SLOPE
T20	363559.05	2504207.64	892.5	TOP SLOPE
B1	363432.58	2504146.99	876.0	BOTTOM OF POND
S1	363660.49	2503903.44	875.27	SWALE BOTTOM
S2	363727.94	2503831.35	874.49	SWALE BOTTOM

PROJECT NO: 2722-10-70	HWY: COFFEE ROAD	COUNTY: WAUKESHA	CONSTRUCTION DETAILS - STORMWATER POND	SHEET 17	E

FILE NAME : S:\Wauk_Co\NewBerlin\Gov\08.0099 Coffee Rd\Design\021008_cd.dgn PLOT DATE : 10/30/2013 PLOT BY : Nick_B PLOT NAME : PLOT SCALE : 1:50

WISDOT/CADDS SHEET 42

2

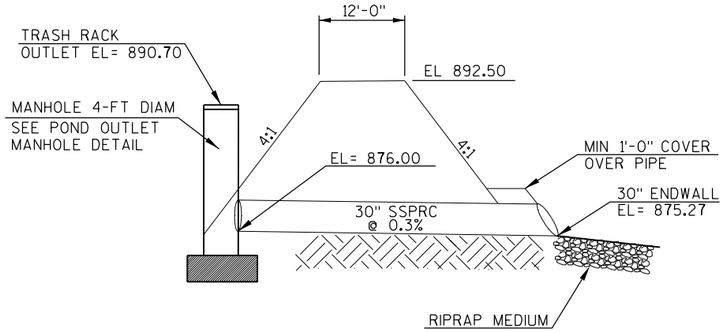

DETENTION POND OUTLET DETAIL

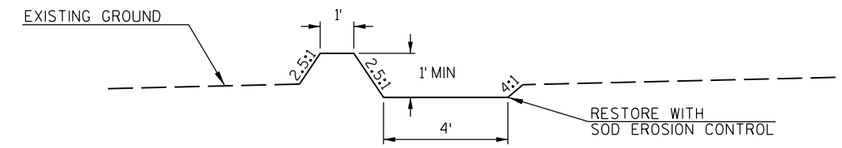

TYPICAL SECTION POND OUTFALL SWALE

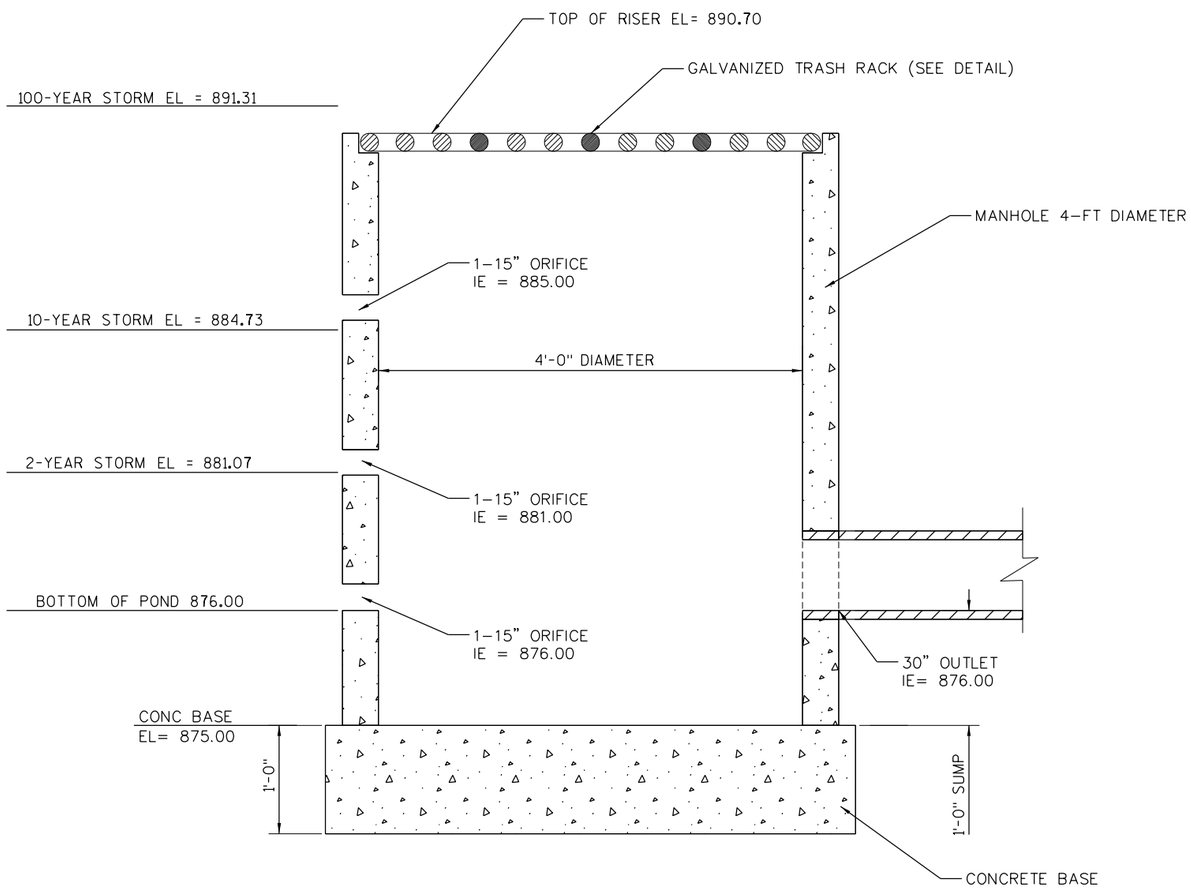

POND OUTLET MANHOLE DETAIL
MANHOLE 4-FT DIAMETER

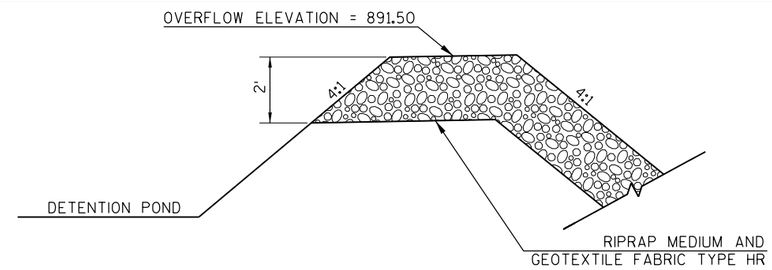

TYPICAL SECTION POND OVERFLOW

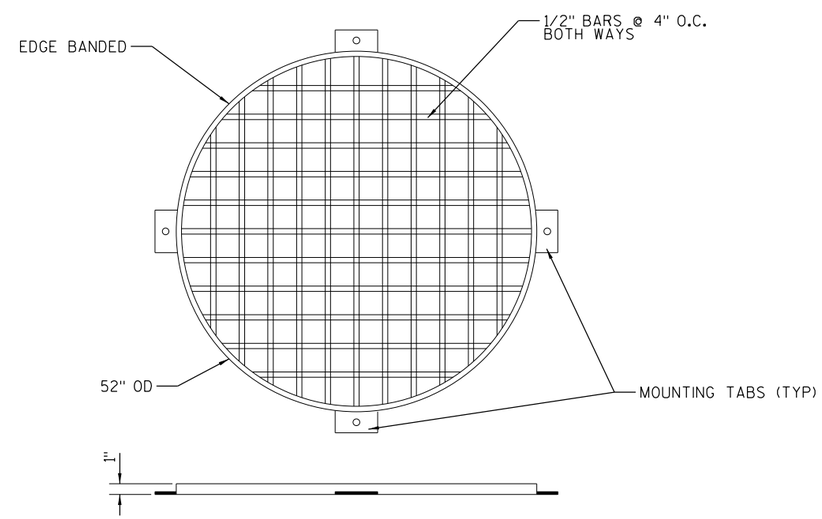

GALVANIZED TRASH RACK DETAIL

PROJECT NO: 2722-10-70	HWY: COFFEE ROAD	COUNTY: WAUKESHA	CONSTRUCTION DETAILS - STORMWATER POND	SHEET 18	E

FILE NAME : S:\Wauk_Co\NewBerlin\Gov\08.0099 Coffee Rd\Design\021009_cd.dgn PLOT DATE : 10/30/2013 PLOT BY : Nick_B PLOT NAME : PLOT SCALE : 1:12

WISDOT/CADDS SHEET 42

NOTES

(A) TAPER CURB HEIGHT FROM 6" TO 0" OVER 10 FEET
(B) DEPRESS SIDEWALK OVER 10 FEET
(C) DEPRESS SIDEWALK OVER 15 FEET
(D) DEPRESS SIDEWALK BY TAPERING CURB FROM 6" TO ¾" OVER 10 FEET
(E) SEE PLAN DETAILS: CURB RAMPS FOR MORE INFORMATION
(F) REVERSE SLOPE GUTTER

NOTE:
MILLING SHALL TAKE PLACE NO MORE THAN 24 HOURS PRIOR TO PAVING.

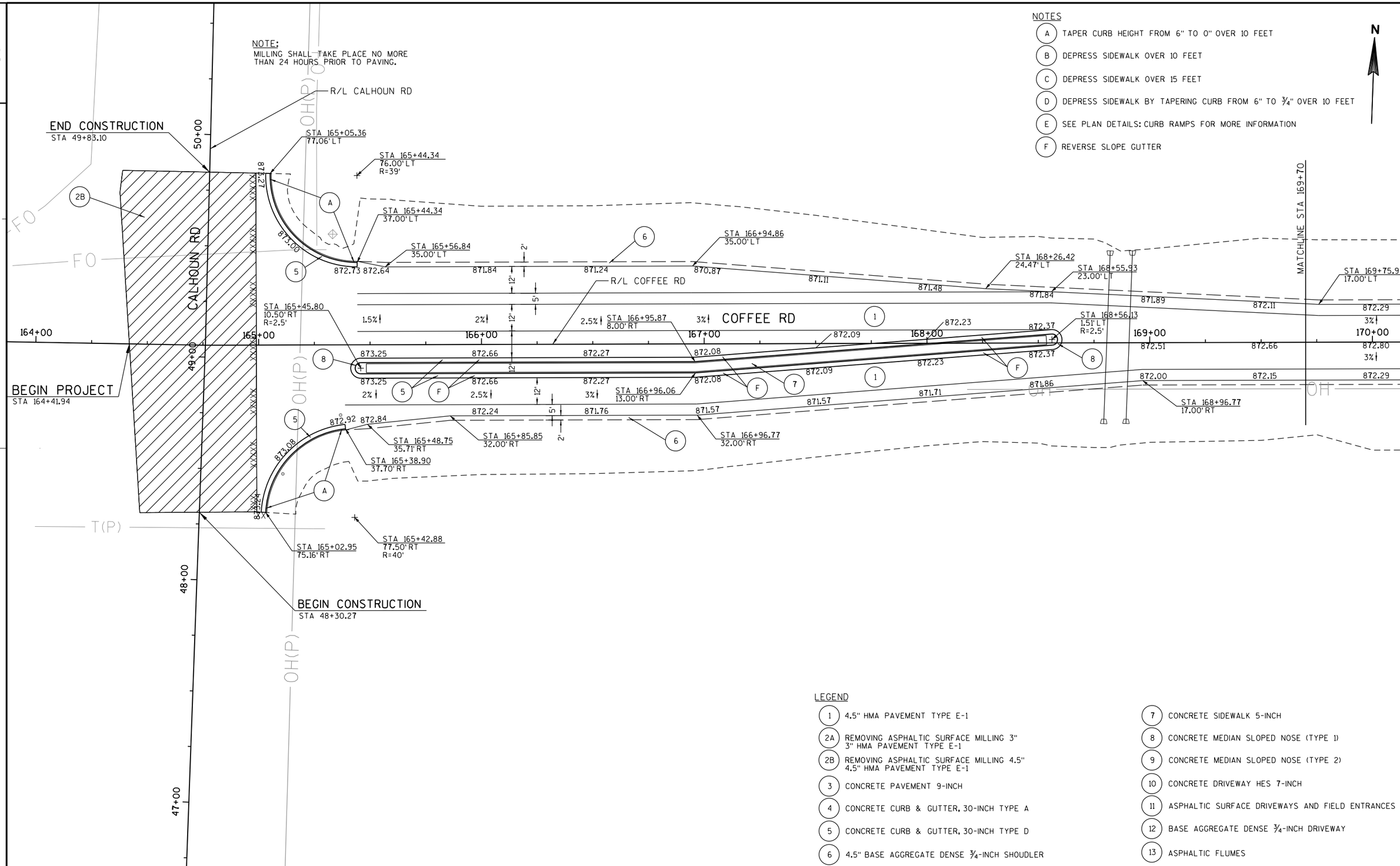

LEGEND

(1) 4.5" HMA PAVEMENT TYPE E-1
(2A) REMOVING ASPHALTIC SURFACE MILLING 3" 3" HMA PAVEMENT TYPE E-1
(2B) REMOVING ASPHALTIC SURFACE MILLING 4.5" 4.5" HMA PAVEMENT TYPE E-1
(3) CONCRETE PAVEMENT 9-INCH
(4) CONCRETE CURB & GUTTER, 30-INCH TYPE A
(5) CONCRETE CURB & GUTTER, 30-INCH TYPE D
(6) 4.5" BASE AGGREGATE DENSE ¾-INCH SHOULDER
(7) CONCRETE SIDEWALK 5-INCH
(8) CONCRETE MEDIAN SLOPED NOSE (TYPE 1)
(9) CONCRETE MEDIAN SLOPED NOSE (TYPE 2)
(10) CONCRETE DRIVEWAY HES 7-INCH
(11) ASPHALTIC SURFACE DRIVEWAYS AND FIELD ENTRANCES
(12) BASE AGGREGATE DENSE ¾-INCH DRIVEWAY
(13) ASPHALTIC FLUMES

PROJECT NO: 2722-10-70	HWY: COFFEE ROAD	COUNTY: WAUKESHA	PLAN DETAILS: COFFEE RD	SHEET 19	E

2

NOTES

- (A) TAPER CURB HEIGHT FROM 6" TO 0" OVER 10 FEET
- (B) DEPRESS SIDEWALK OVER 10 FEET
- (C) DEPRESS SIDEWALK OVER 15 FEET
- (D) DEPRESS SIDEWALK BY TAPERING CURB FROM 6" TO ¾" OVER 10 FEET
- (E) SEE PLAN DETAILS: CURB RAMPS FOR MORE INFORMATION
- (F) REVERSE SLOPE GUTTER

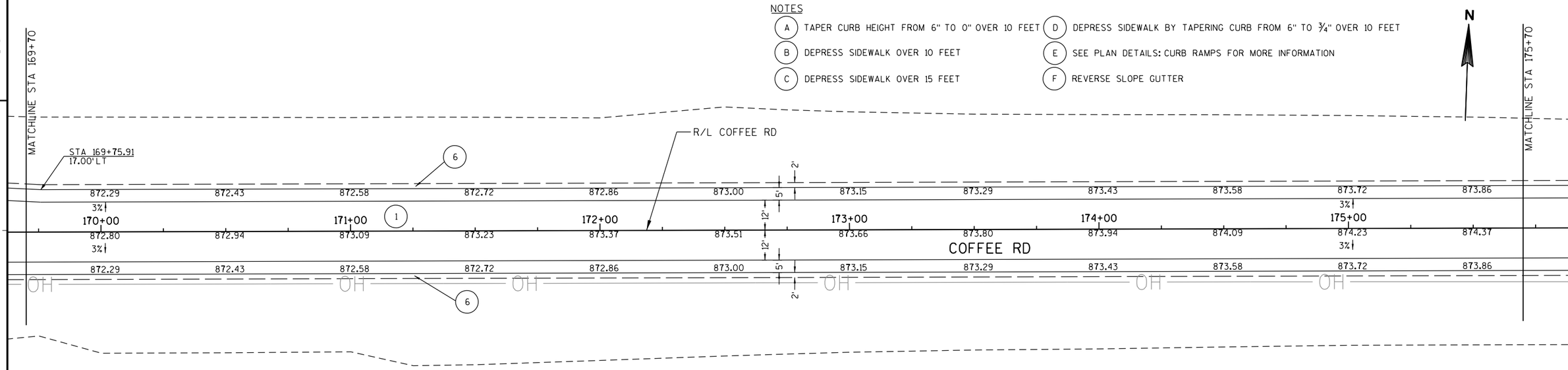

LEGEND

- (1) 4.5" HMA PAVEMENT TYPE E-1
- (2A) REMOVING ASPHALTIC SURFACE MILLING 3" 3" HMA PAVEMENT TYPE E-1
- (2B) REMOVING ASPHALTIC SURFACE MILLING 4.5" 4.5" HMA PAVEMENT TYPE E-1
- (3) CONCRETE PAVEMENT 9-INCH
- (4) CONCRETE CURB & GUTTER, 30-INCH TYPE A
- (5) CONCRETE CURB & GUTTER, 30-INCH TYPE D
- (6) 4.5" BASE AGGREGATE DENSE ¾-INCH SHOULDER
- (7) CONCRETE SIDEWALK 5-INCH
- (8) CONCRETE MEDIAN SLOPED NOSE (TYPE 1)
- (9) CONCRETE MEDIAN SLOPED NOSE (TYPE 2)
- (10) CONCRETE DRIVEWAY HES 7-INCH
- (11) ASPHALTIC SURFACE DRIVEWAYS AND FIELD ENTRANCES
- (12) BASE AGGREGATE DENSE ¾-INCH DRIVEWAY
- (13) ASPHALTIC FLUMES

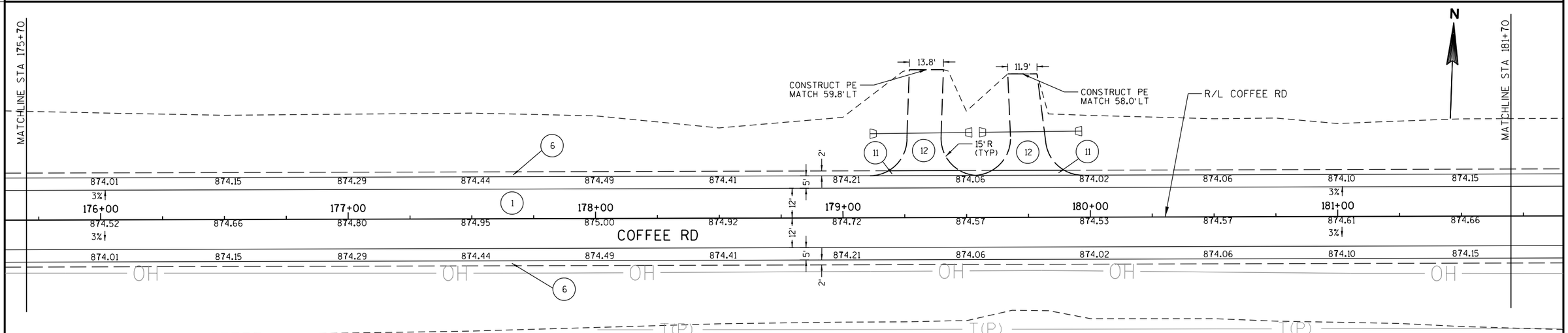

PROJECT NO: 2722-10-70	HWY: COFFEE ROAD	COUNTY: WAUKESHA	PLAN DETAILS: COFFEE RD	SHEET 20	E

NOTES

- (A) TAPER CURB HEIGHT FROM 6" TO 0" OVER 10 FEET
- (B) DEPRESS SIDEWALK OVER 10 FEET
- (C) DEPRESS SIDEWALK OVER 15 FEET
- (D) DEPRESS SIDEWALK BY TAPERING CURB FROM 6" TO ¾" OVER 10 FEET
- (E) SEE PLAN DETAILS: CURB RAMPS FOR MORE INFORMATION
- (F) REVERSE SLOPE GUTTER

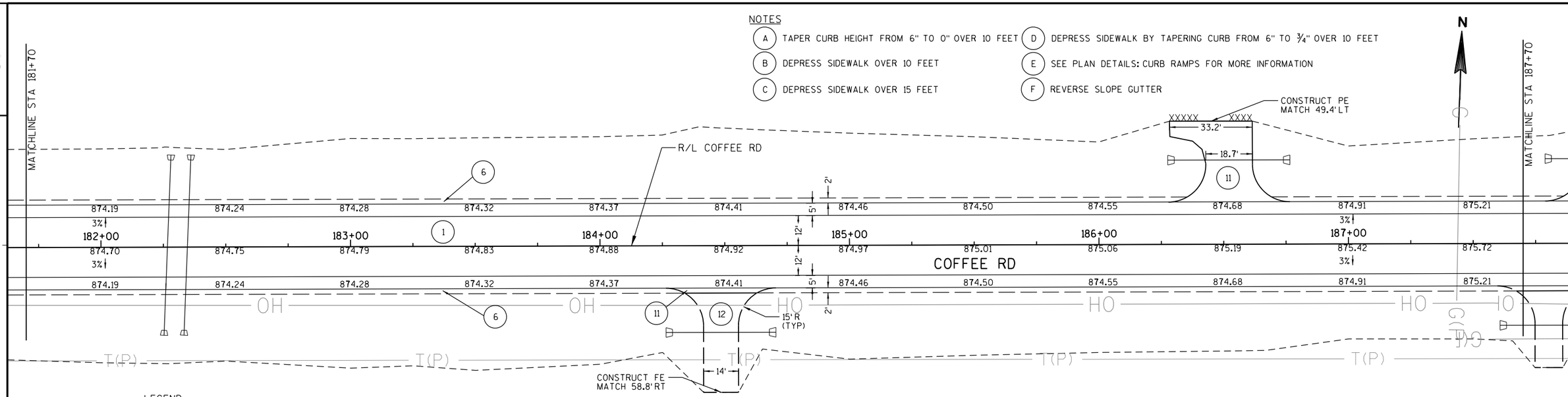

LEGEND

(1) 4.5" HMA PAVEMENT TYPE E-1	(3) CONCRETE PAVEMENT 9-INCH	(6) 4.5" BASE AGGREGATE DENSE ¾-INCH SHOULDER	(9) CONCRETE MEDIAN SLOPED NOSE (TYPE 2)	(12) BASE AGGREGATE DENSE ¾-INCH DRIVEWAY
(2A) REMOVING ASPHALTIC SURFACE MILLING 3" 3" HMA PAVEMENT TYPE E-1	(4) CONCRETE CURB & GUTTER, 30-INCH TYPE A	(7) CONCRETE SIDEWALK 5-INCH	(10) CONCRETE DRIVEWAY HES 7-INCH	(13) ASPHALTIC FLUMES
(2B) REMOVING ASPHALTIC SURFACE MILLING 4.5" 4.5" HMA PAVEMENT TYPE E-1	(5) CONCRETE CURB & GUTTER, 30-INCH TYPE D	(8) CONCRETE MEDIAN SLOPED NOSE (TYPE 1)	(11) ASPHALTIC SURFACE DRIVEWAYS AND FIELD ENTRANCES	

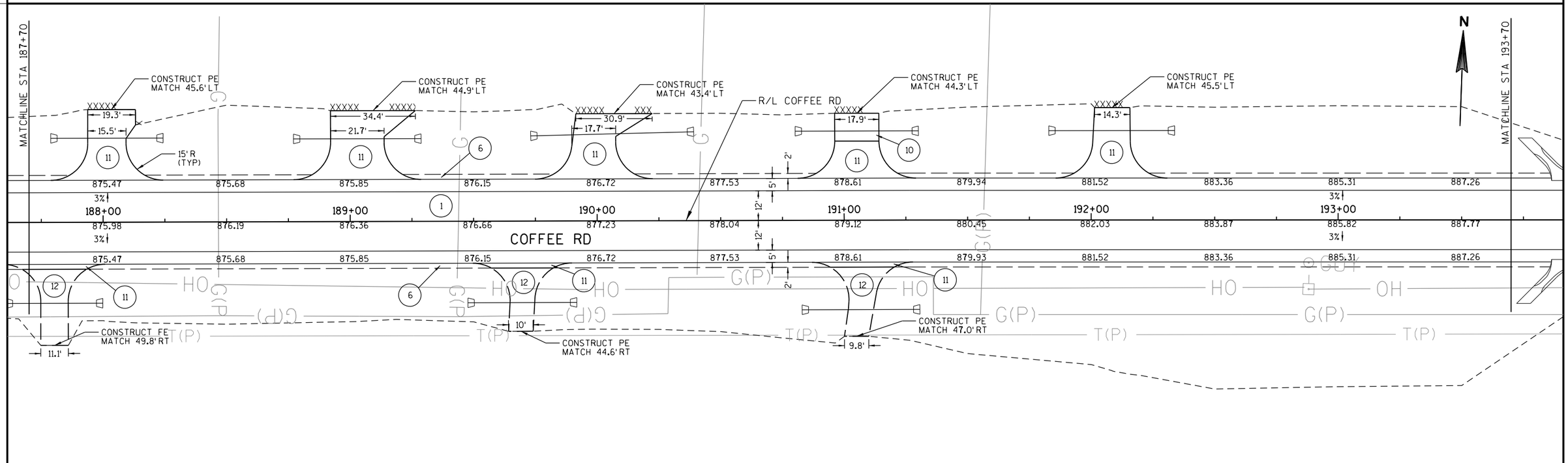

PROJECT NO: 2722-10-70	HWY: COFFEE ROAD	COUNTY: WAUKESHA	PLAN DETAILS: COFFEE RD	SHEET 21	E

2

NOTES

(A) TAPER CURB HEIGHT FROM 6" TO 0" OVER 10 FEET
(B) DEPRESS SIDEWALK OVER 10 FEET
(C) DEPRESS SIDEWALK OVER 15 FEET
(D) DEPRESS SIDEWALK BY TAPERING CURB FROM 6" TO ¾" OVER 10 FEET
(E) SEE PLAN DETAILS: CURB RAMPS FOR MORE INFORMATION
(F) REVERSE SLOPE GUTTER

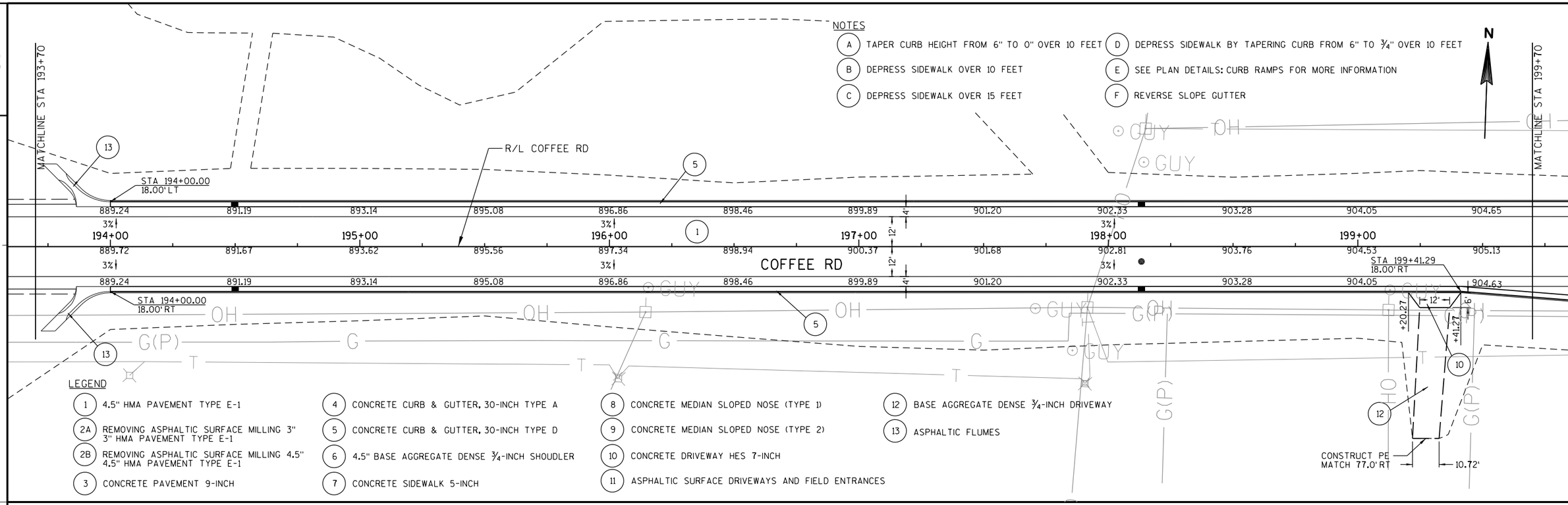

LEGEND

(1) 4.5" HMA PAVEMENT TYPE E-1
(2A) REMOVING ASPHALTIC SURFACE MILLING 3" 3" HMA PAVEMENT TYPE E-1
(2B) REMOVING ASPHALTIC SURFACE MILLING 4.5" 4.5" HMA PAVEMENT TYPE E-1
(3) CONCRETE PAVEMENT 9-INCH
(4) CONCRETE CURB & GUTTER, 30-INCH TYPE A
(5) CONCRETE CURB & GUTTER, 30-INCH TYPE D
(6) 4.5" BASE AGGREGATE DENSE ¾-INCH SHOULDER
(7) CONCRETE SIDEWALK 5-INCH
(8) CONCRETE MEDIAN SLOPED NOSE (TYPE 1)
(9) CONCRETE MEDIAN SLOPED NOSE (TYPE 2)
(10) CONCRETE DRIVEWAY HES 7-INCH
(11) ASPHALTIC SURFACE DRIVEWAYS AND FIELD ENTRANCES
(12) BASE AGGREGATE DENSE ¾-INCH DRIVEWAY
(13) ASPHALTIC FLUMES

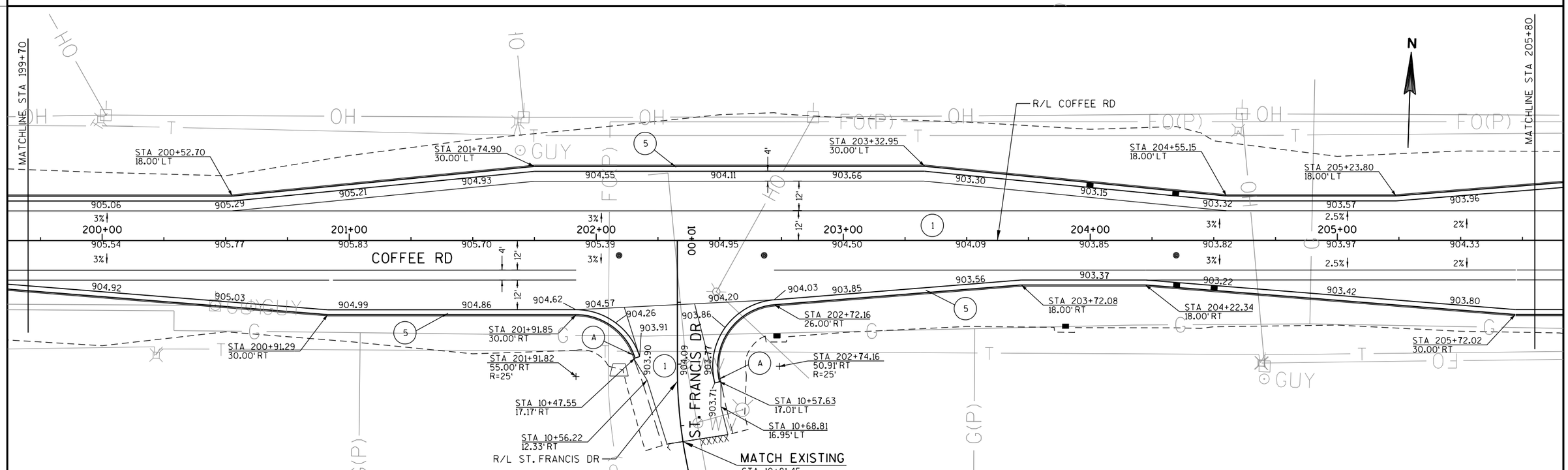

PROJECT NO: 2722-10-70	HWY: COFFEE ROAD	COUNTY: WAUKESHA	PLAN DETAILS: COFFEE RD	SHEET 22	E

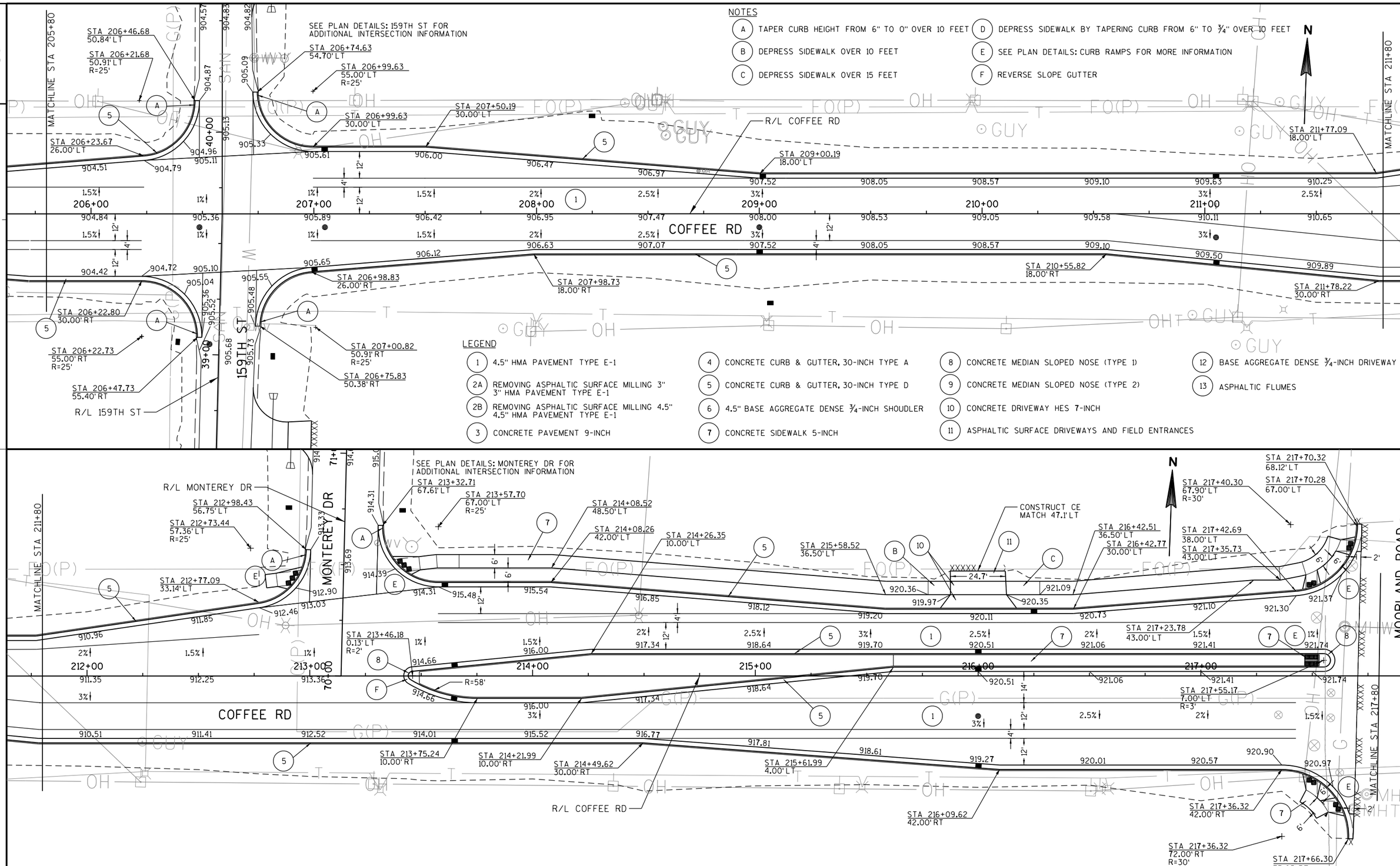

PROJECT NO: 2722-10-70	HWY: COFFEE ROAD	COUNTY: WAUKESHA	PLAN DETAILS: COFFEE RD	SHEET 23	E

FILE NAME : S:\Wauk_Co\NewBerlin\Gov\08.0099 Coffee Rd\Design\021205_PD.dgn PLOT DATE : 10/30/2013 PLOT BY : Nick_B PLOT NAME : PLOT SCALE : 1:40

WISDOT/CADDS SHEET 42

NOTES

- (A) TAPER CURB HEIGHT FROM 6" TO 0" OVER 10 FEET
- (B) DEPRESS SIDEWALK OVER 10 FEET
- (C) DEPRESS SIDEWALK OVER 15 FEET
- (D) DEPRESS SIDEWALK BY TAPERING CURB FROM 6" TO ¾" OVER 10 FEET
- (E) SEE PLAN DETAILS: CURB RAMPS FOR MORE INFORMATION
- (F) REVERSE SLOPE GUTTER

LEGEND

- (1) 4.5" HMA PAVEMENT TYPE E-1
- (2A) REMOVING ASPHALTIC SURFACE MILLING 3" 3" HMA PAVEMENT TYPE E-1
- (2B) REMOVING ASPHALTIC SURFACE MILLING 4.5" 4.5" HMA PAVEMENT TYPE E-1
- (3) CONCRETE PAVEMENT 9-INCH
- (4) CONCRETE CURB & GUTTER, 30-INCH TYPE A
- (5) CONCRETE CURB & GUTTER, 30-INCH TYPE D
- (6) 4.5" BASE AGGREGATE DENSE ¾-INCH SHOULDER
- (7) CONCRETE SIDEWALK 5-INCH
- (8) CONCRETE MEDIAN SLOPED NOSE (TYPE 1)
- (9) CONCRETE MEDIAN SLOPED NOSE (TYPE 2)
- (10) CONCRETE DRIVEWAY HES 7-INCH
- (11) ASPHALTIC SURFACE DRIVEWAYS AND FIELD ENTRANCES
- (12) BASE AGGREGATE DENSE ¾-INCH DRIVEWAY
- (13) ASPHALTIC FLUMES

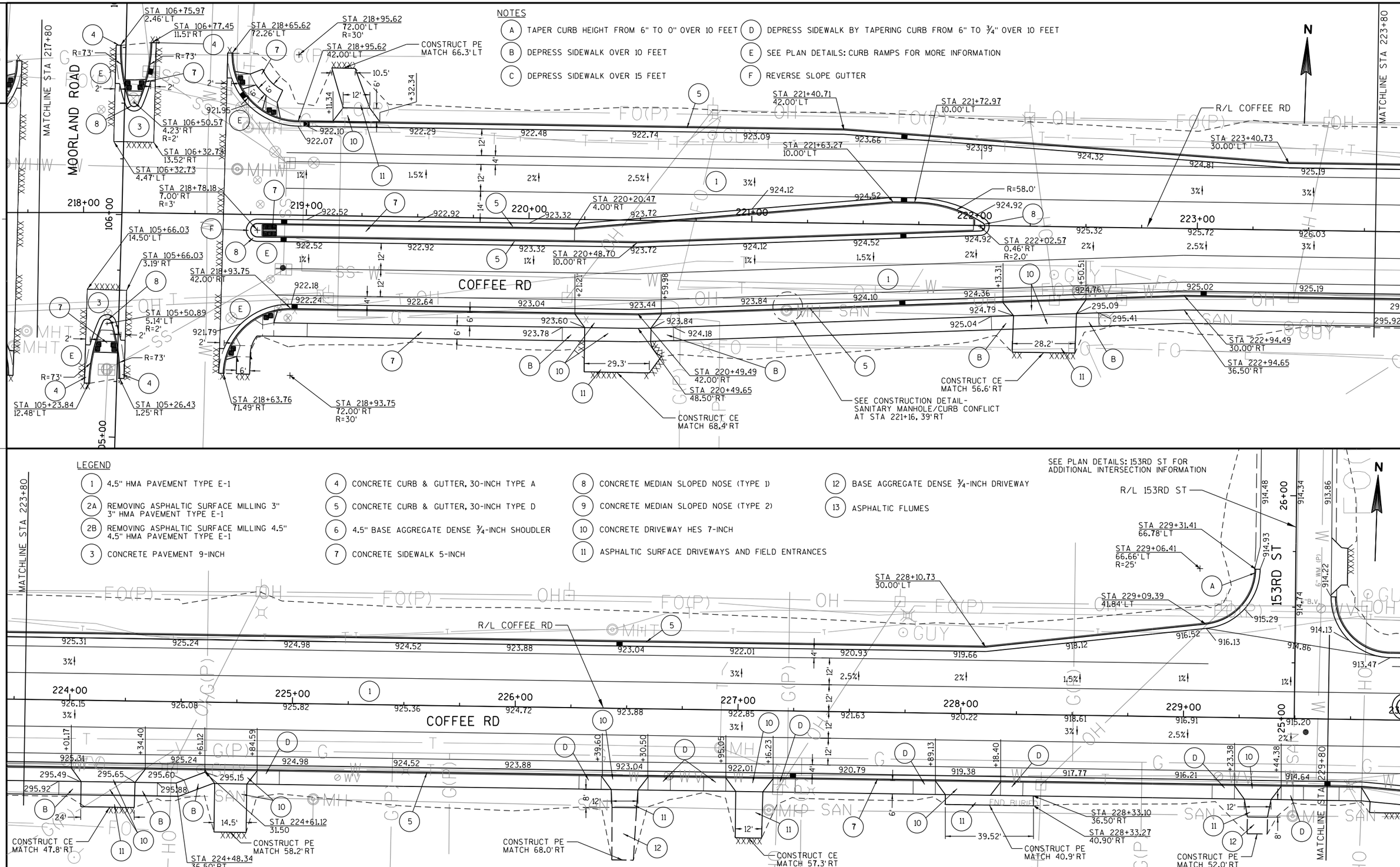

PROJECT NO: 2722-10-70	HWY: COFFEE ROAD	COUNTY: WAUKESHA	PLAN DETAILS: COFFEE RD	SHEET 24	E

2

LEGEND

1. 4.5" HMA PAVEMENT TYPE E-1
2A. REMOVING ASPHALTIC SURFACE MILLING 3" 3" HMA PAVEMENT TYPE E-1
2B. REMOVING ASPHALTIC SURFACE MILLING 4.5" 4.5" HMA PAVEMENT TYPE E-1
3. CONCRETE PAVEMENT 9-INCH
4. CONCRETE CURB & GUTTER, 30-INCH TYPE A
5. CONCRETE CURB & GUTTER, 30-INCH TYPE D
6. 4.5" BASE AGGREGATE DENSE ¾-INCH SHOULDER
7. CONCRETE SIDEWALK 5-INCH
8. CONCRETE MEDIAN SLOPED NOSE (TYPE 1)
9. CONCRETE MEDIAN SLOPED NOSE (TYPE 2)
10. CONCRETE DRIVEWAY HES 7-INCH
11. ASPHALTIC SURFACE DRIVEWAYS AND FIELD ENTRANCES
12. BASE AGGREGATE DENSE ¾-INCH DRIVEWAY
13. ASPHALTIC FLUMES

NOTES

A. TAPER CURB HEIGHT FROM 6" TO 0" OVER 10 FEET
B. DEPRESS SIDEWALK OVER 10 FEET
C. DEPRESS SIDEWALK OVER 15 FEET
D. DEPRESS SIDEWALK BY TAPERING CURB FROM 6" TO ¾" OVER 10 FEET
E. SEE PLAN DETAILS: CURB RAMPS FOR MORE INFORMATION
F. REVERSE SLOPE GUTTER

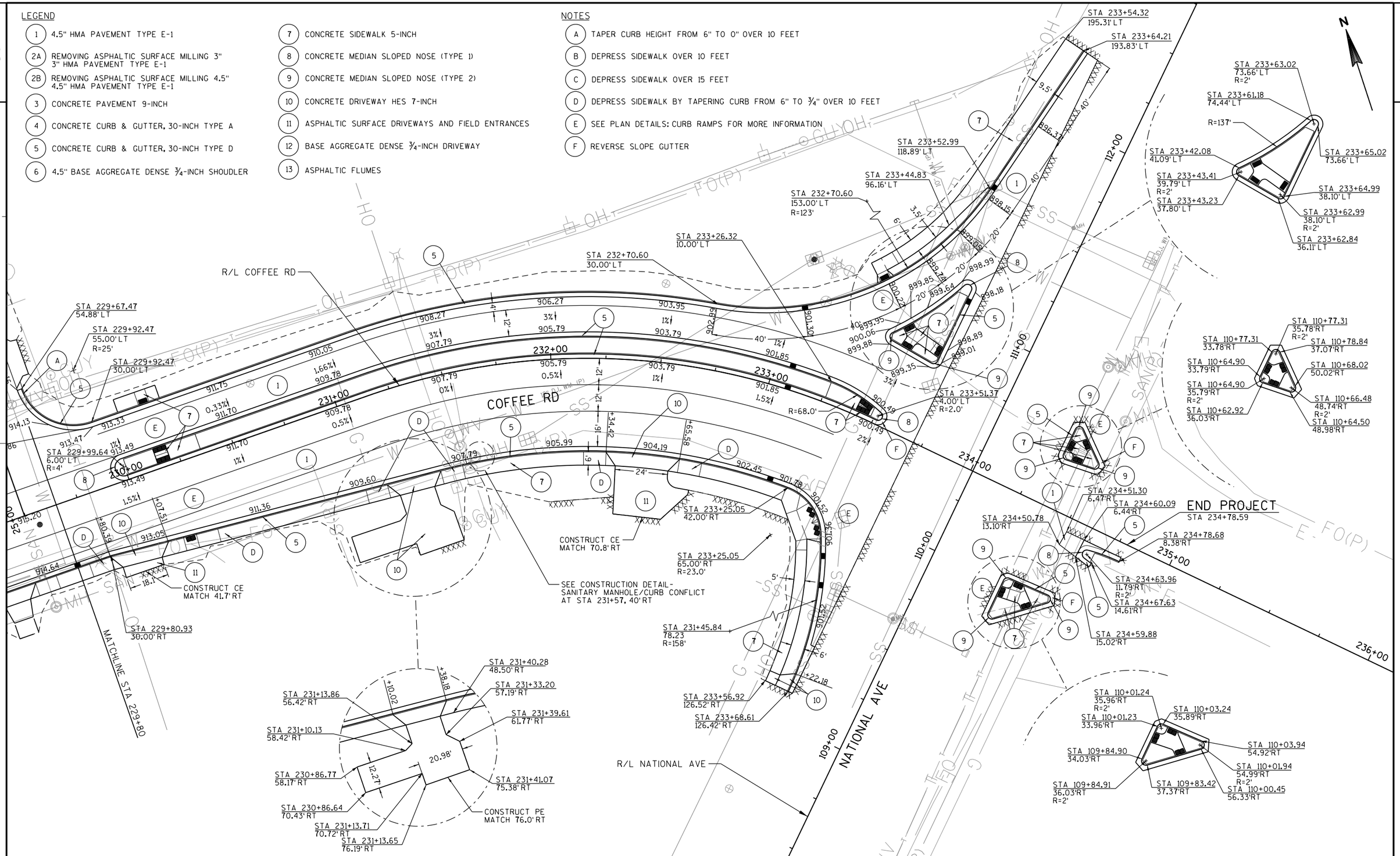

PROJECT NO: 2722-10-70	HWY: COFFEE ROAD	COUNTY: WAUKESHA	PLAN DETAILS: COFFEE RD	SHEET 25	E

2

NOTES

(A) TAPER CURB HEIGHT FROM 6" TO 0" OVER 10 FEET
(B) DEPRESS SIDEWALK OVER 10 FEET
(C) DEPRESS SIDEWALK OVER 15 FEET
(D) DEPRESS SIDEWALK BY TAPERING CURB FROM 6" TO ¾" OVER 10 FEET
(E) SEE PLAN DETAILS: CURB RAMPS FOR MORE INFORMATION
(F) REVERSE SLOPE GUTTER

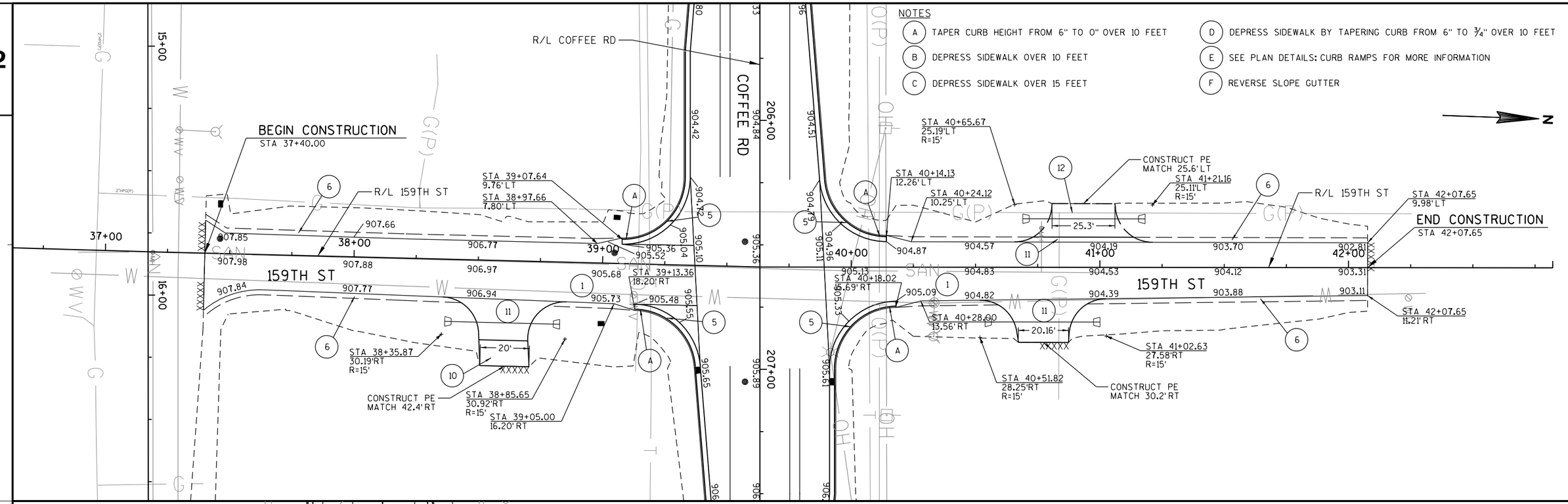

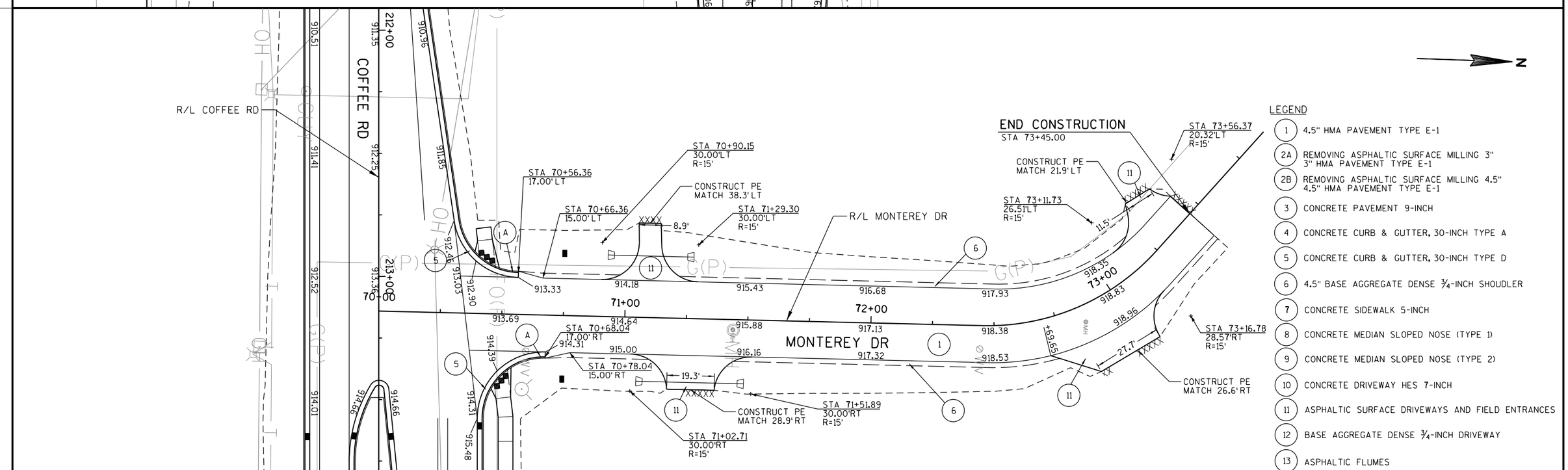

LEGEND

1. 4.5" HMA PAVEMENT TYPE E-1
2A. REMOVING ASPHALTIC SURFACE MILLING 3" 3" HMA PAVEMENT TYPE E-1
2B. REMOVING ASPHALTIC SURFACE MILLING 4.5" 4.5" HMA PAVEMENT TYPE E-1
3. CONCRETE PAVEMENT 9-INCH
4. CONCRETE CURB & GUTTER, 30-INCH TYPE A
5. CONCRETE CURB & GUTTER, 30-INCH TYPE D
6. 4.5" BASE AGGREGATE DENSE ¾-INCH SHOULDER
7. CONCRETE SIDEWALK 5-INCH
8. CONCRETE MEDIAN SLOPED NOSE (TYPE 1)
9. CONCRETE MEDIAN SLOPED NOSE (TYPE 2)
10. CONCRETE DRIVEWAY HES 7-INCH
11. ASPHALTIC SURFACE DRIVEWAYS AND FIELD ENTRANCES
12. BASE AGGREGATE DENSE ¾-INCH DRIVEWAY
13. ASPHALTIC FLUMES

PROJECT NO: 2722-10-70	HWY: COFFEE ROAD	COUNTY: WAUKESHA	PLAN DETAILS: 159TH STREET & MONTEREY DRIVE	SHEET 26	E

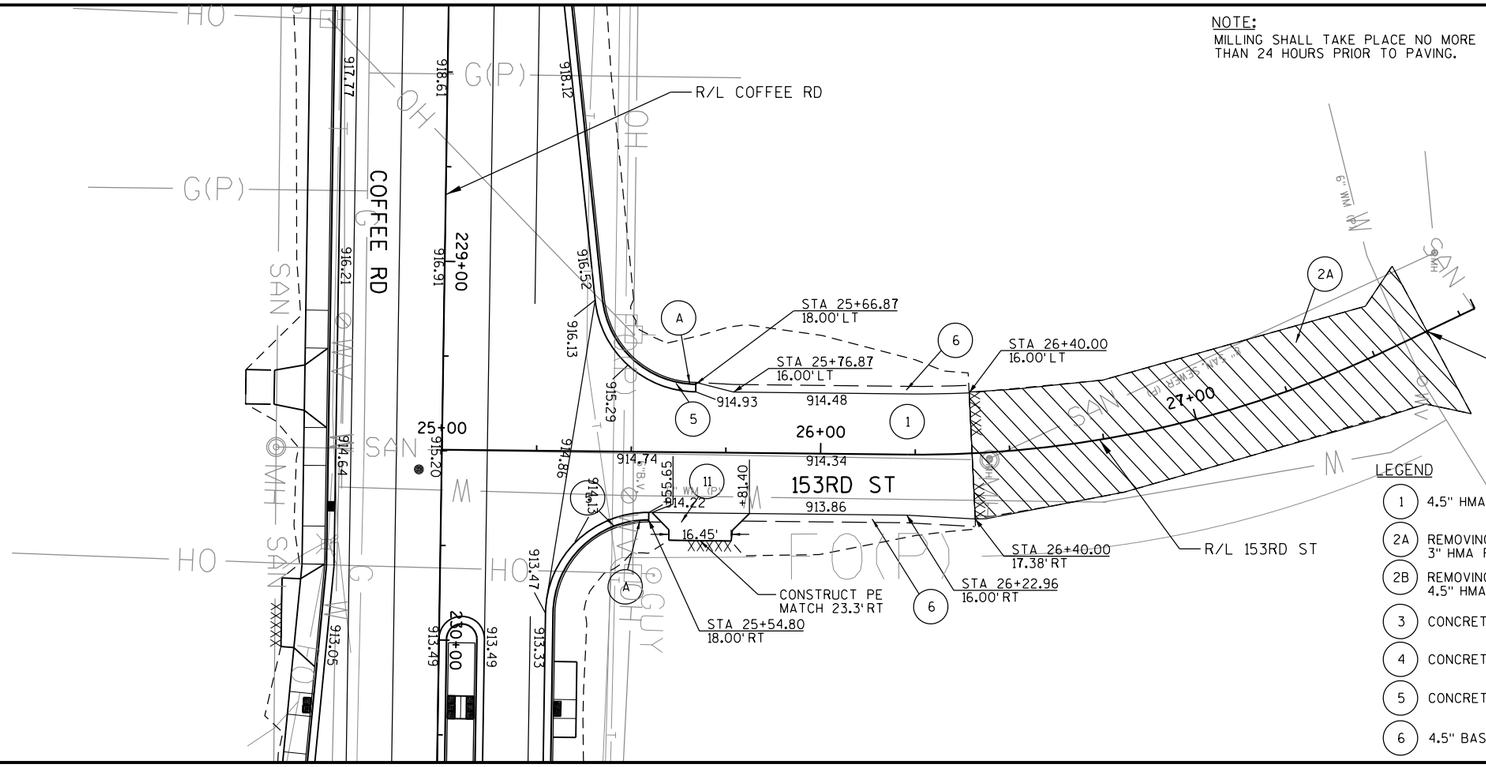

NOTE:
MILLING SHALL TAKE PLACE NO MORE THAN 24 HOURS PRIOR TO PAVING.

NOTES

- (A) TAPER CURB HEIGHT FROM 6" TO 0" OVER 10 FEET
- (B) DEPRESS SIDEWALK OVER 10 FEET
- (C) DEPRESS SIDEWALK OVER 15 FEET
- (D) DEPRESS SIDEWALK BY TAPERING CURB FROM 6" TO ¾" OVER 10 FEET
- (E) SEE PLAN DETAILS: CURB RAMPS FOR MORE INFORMATION
- (F) REVERSE SLOPE GUTTER

N

LEGEND

- (1) 4.5" HMA PAVEMENT TYPE E-1
- (2A) REMOVING ASPHALTIC SURFACE MILLING 3" 3" HMA PAVEMENT TYPE E-1
- (2B) REMOVING ASPHALTIC SURFACE MILLING 4.5" 4.5" HMA PAVEMENT TYPE E-1
- (3) CONCRETE PAVEMENT 9-INCH
- (4) CONCRETE CURB & GUTTER, 30-INCH TYPE A
- (5) CONCRETE CURB & GUTTER, 30-INCH TYPE D
- (6) 4.5" BASE AGGREGATE DENSE ¾-INCH SHOULDER
- (7) CONCRETE SIDEWALK 5-INCH
- (8) CONCRETE MEDIAN SLOPED NOSE (TYPE 1)
- (9) CONCRETE MEDIAN SLOPED NOSE (TYPE 2)
- (10) CONCRETE DRIVEWAY HES 7-INCH
- (11) ASPHALTIC SURFACE DRIVEWAYS AND FIELD ENTRANCES
- (12) BASE AGGREGATE DENSE ¾-INCH DRIVEWAY
- (13) ASPHALTIC FLUMES

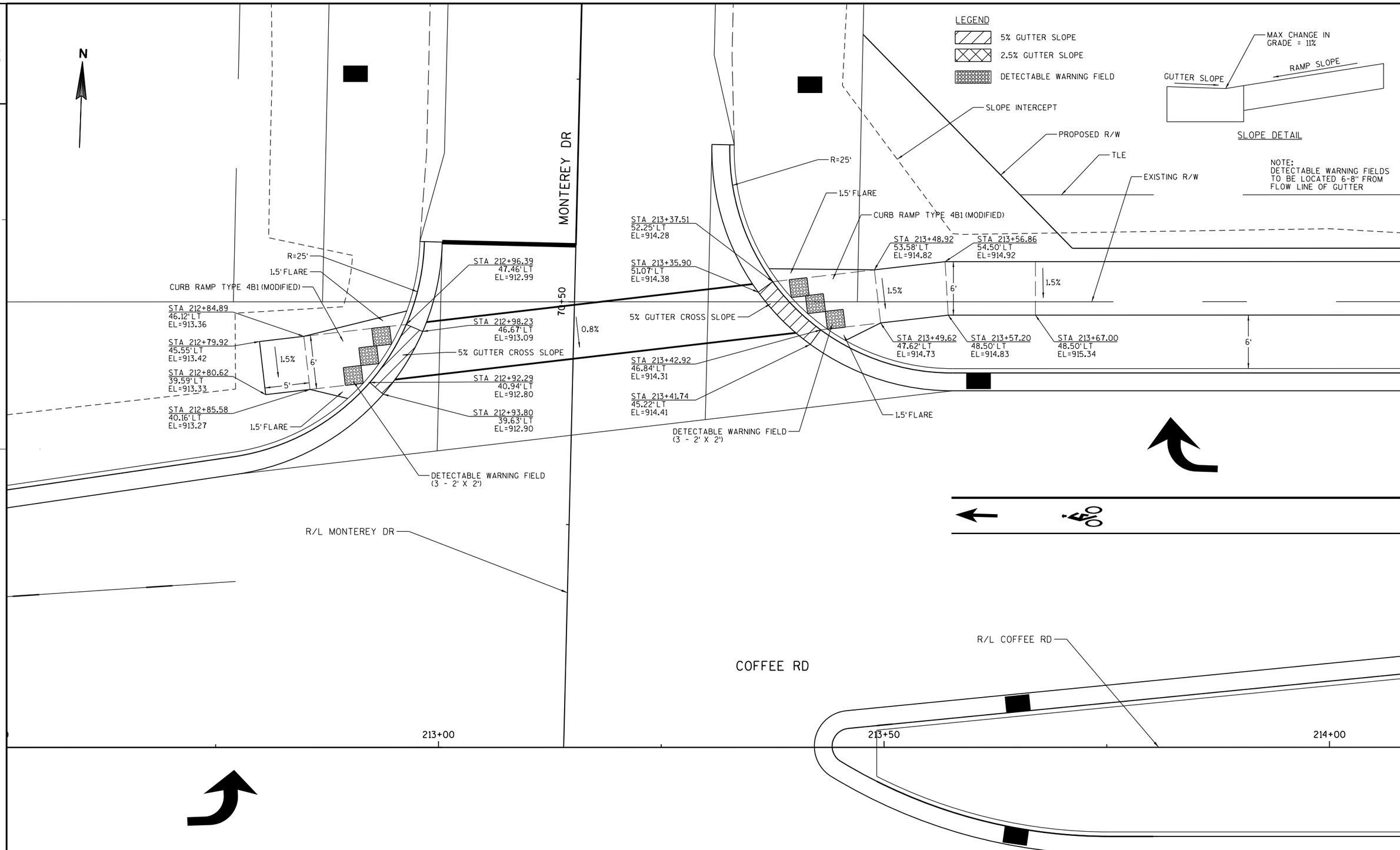
N
LEGEND
5% GUTTER SLOPE
2.5% GUTTER SLOPE
DETECTABLE WARNING FIELD
MAX CHANGE IN GRADE = 11%
GUTTER SLOPE
RAMP SLOPE
SLOPE DETAIL
NOTE:
DETECTABLE WARNING FIELDS TO BE LOCATED 6-8" FROM FLOW LINE OF GUTTER
SLOPE INTERCEPT
PROPOSED R/W
TLE
EXISTING R/W
MONTEREY DR
R=25'
1.5' FLARE
CURB RAMP TYPE 4B1 (MODIFIED)
STA 212+84.89
46.12' LT
EL=913.36
STA 212+79.92
45.55' LT
EL=913.42
STA 212+80.62
39.59' LT
EL=913.33
STA 212+85.58
40.16' LT
EL=913.27
STA 212+96.39
47.46' LT
EL=912.99
STA 212+98.23
46.67' LT
EL=913.09
STA 212+92.29
40.94' LT
EL=912.80
STA 212+93.80
39.63' LT
EL=912.90
70+50
0.8%
1.5%
6'
5'
5% GUTTER CROSS SLOPE
DETECTABLE WARNING FIELD
(3 - 2' X 2')
R/L MONTEREY DR
STA 213+37.51
52.25' LT
EL=914.28
STA 213+35.90
51.07' LT
EL=914.38
STA 213+42.92
46.84' LT
EL=914.31
STA 213+41.74
45.22' LT
EL=914.41
STA 213+48.92
53.58' LT
EL=914.82
STA 213+56.86
54.50' LT
EL=914.92
STA 213+49.62
47.62' LT
EL=914.73
STA 213+57.20
48.50' LT
EL=914.83
STA 213+67.00
48.50' LT
EL=915.34
COFFEE RD
R/L COFFEE RD
213+00
213+50
214+00

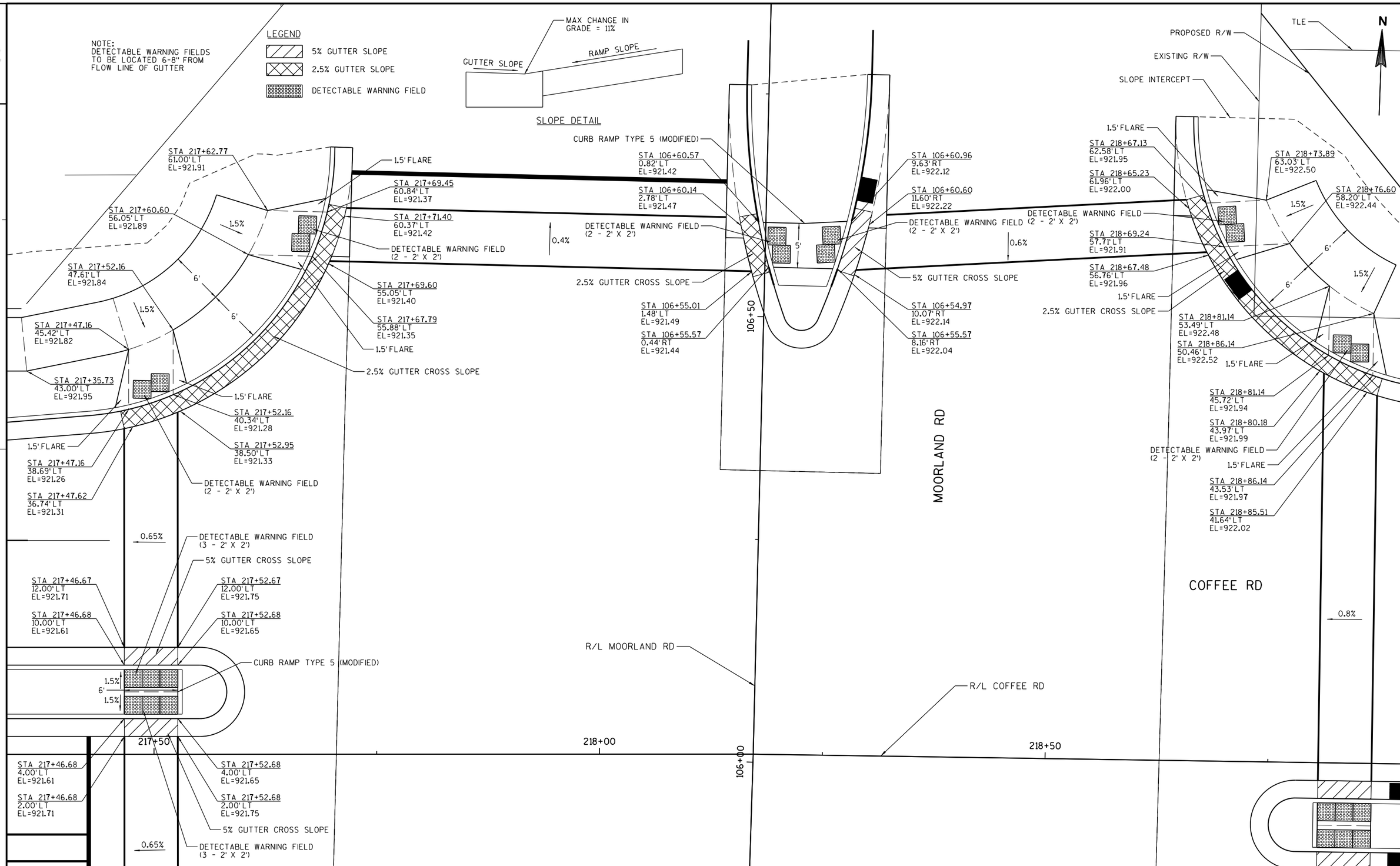

PROJECT NO: 2722-10-70	HWY: COFFEE ROAD	COUNTY: WAUKESHA	PLAN DETAILS: CURB RAMPS	SHEET 29	E

FILE NAME : S:\Wauk_Co\NewBerlin\Gov\08.0099 Coffee Rd\Design\021212_PD.dgn PLOT DATE : 10/30/2013 PLOT BY : Nick_B PLOT NAME : PLOT SCALE : 1:10

WISDOT/CADDS SHEET 42

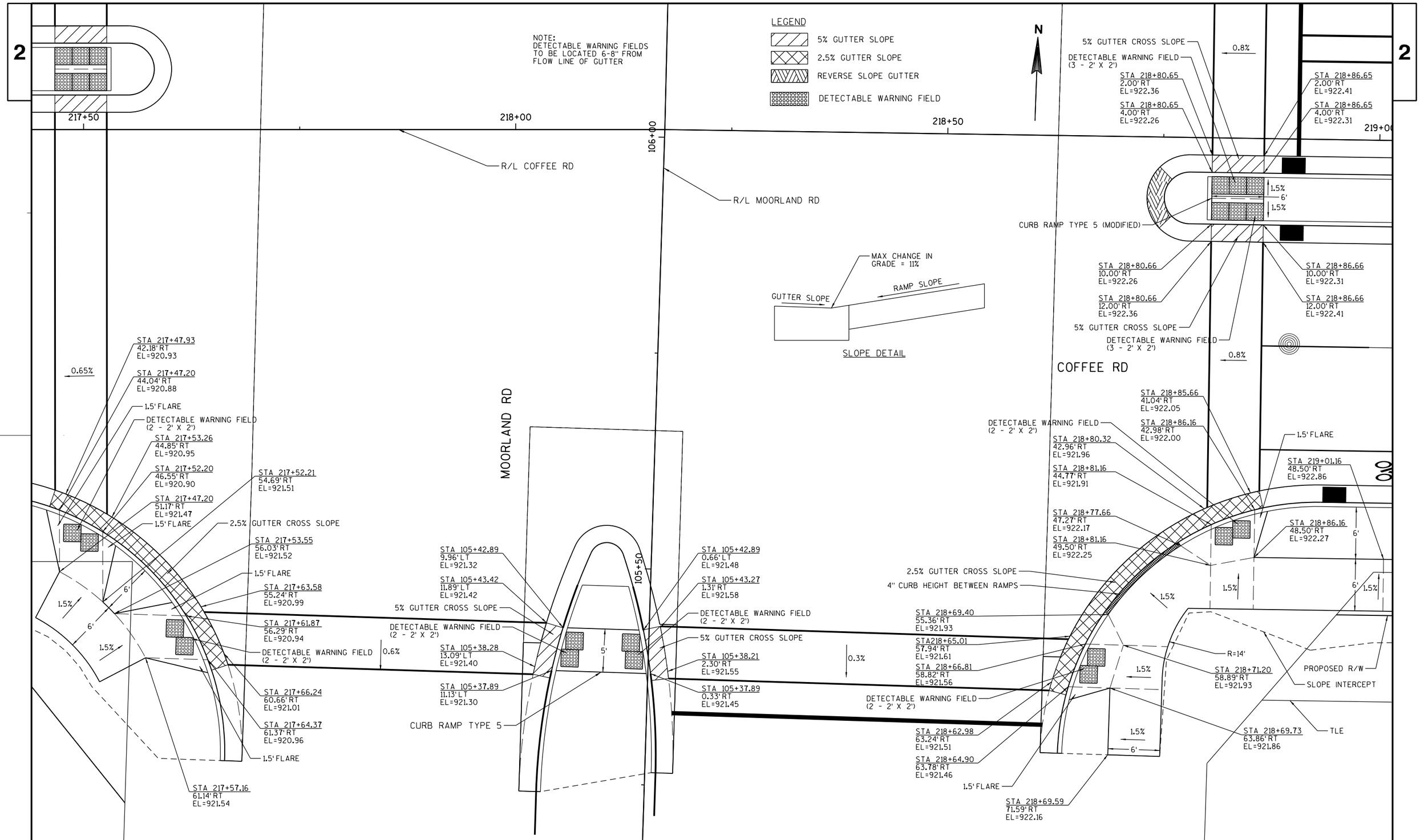

PROJECT NO: 2722-10-70	HWY: COFFEE ROAD	COUNTY: WAUKESHA	PLAN DETAILS: CURB RAMPS	SHEET 30	E

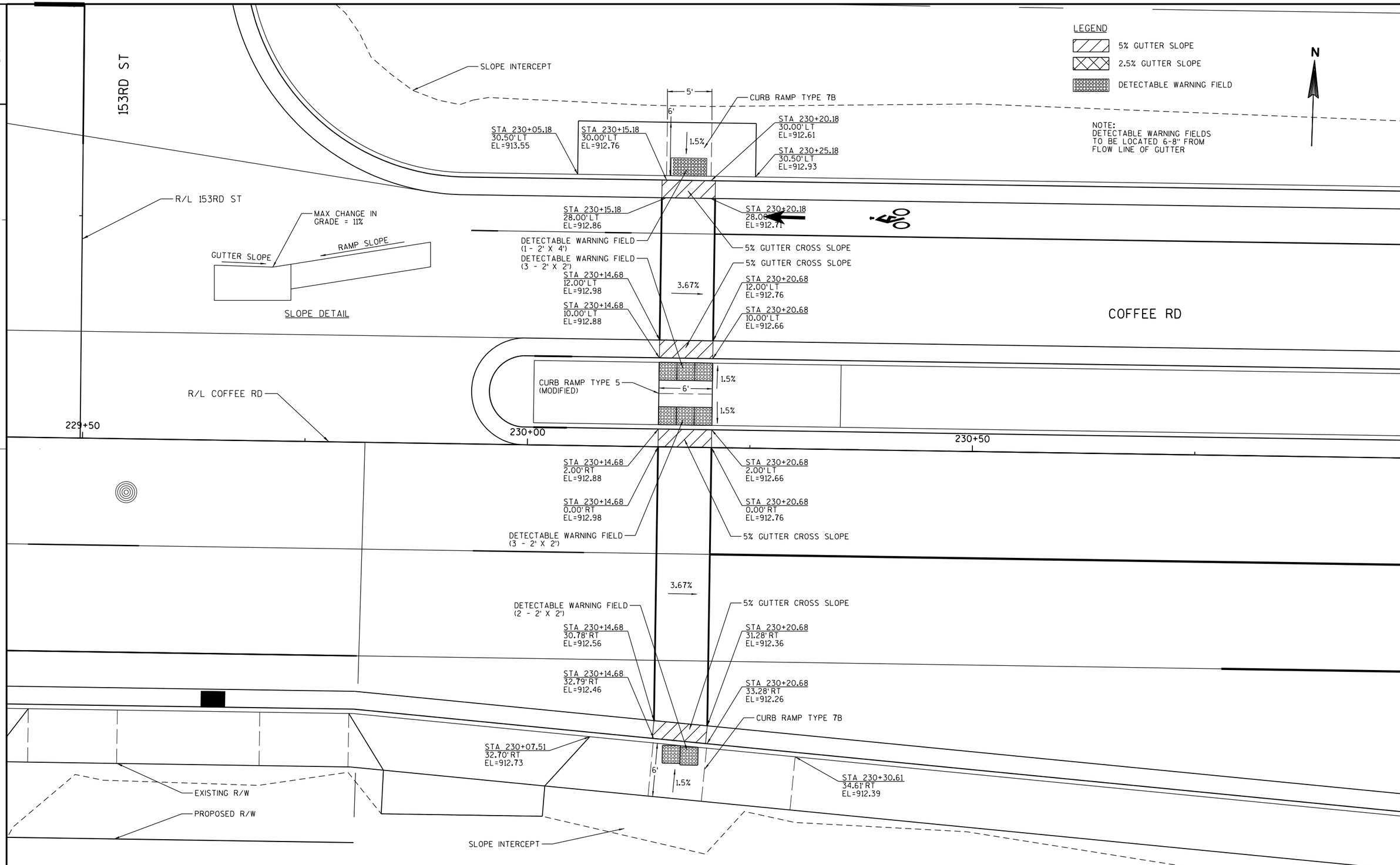

PROJECT NO: 2722-10-70	HWY: COFFEE ROAD	COUNTY: WAUKESHA	PLAN DETAILS: CURB RAMPS	SHEET 31	E

FILE NAME : S:\Wauk_Co\NewBerlin\Gov\08.0099 Coffee Rd\Design\021214_PD.dgn PLOT DATE : 10/30/2013 PLOT BY : Nick_B PLOT NAME : PLOT SCALE : 1:10

WISDOT/CADDS SHEET 42

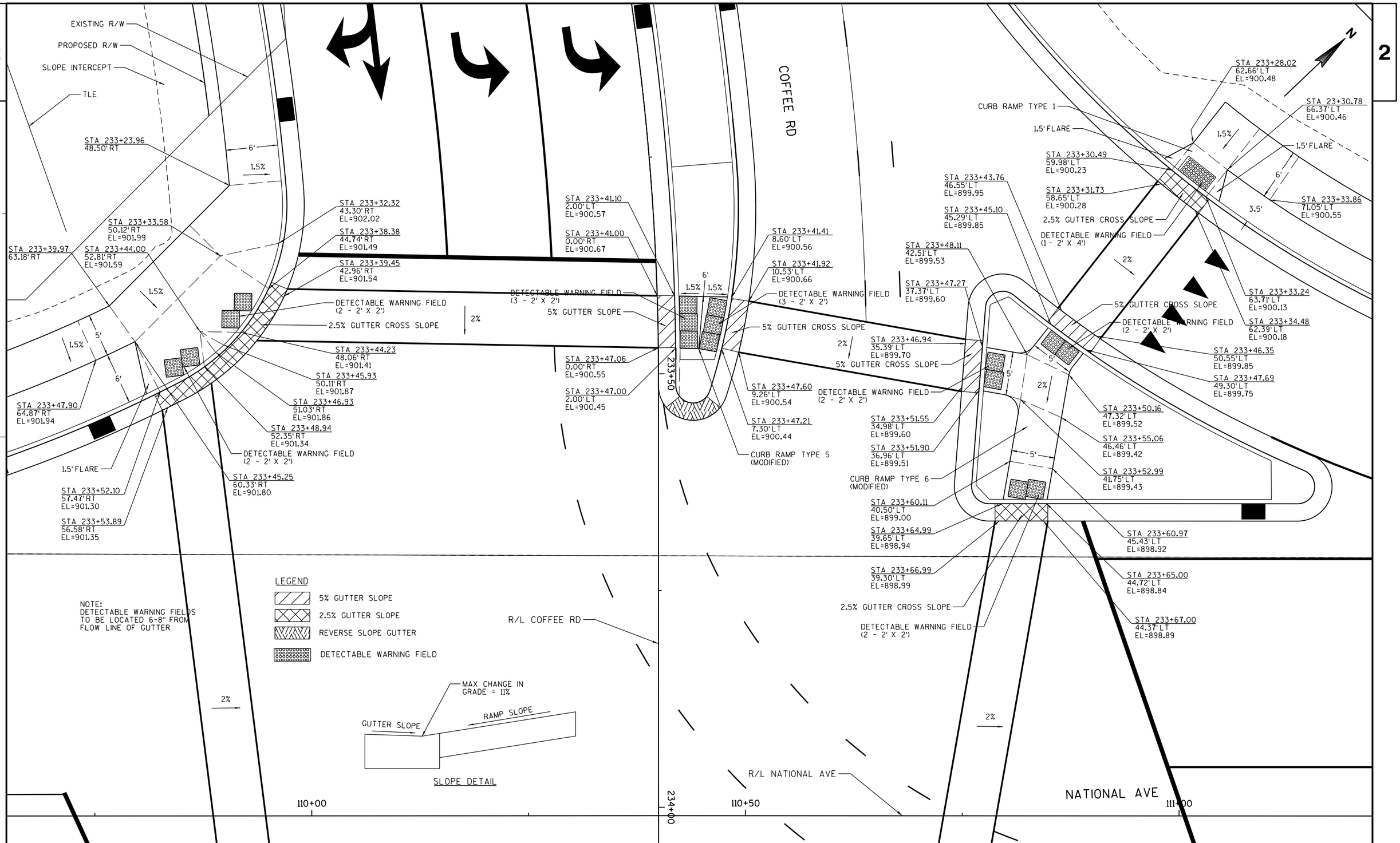

PROJECT NO: 2722-10-70	HWY: COFFEE ROAD	COUNTY: WAUKESHA	PLAN DETAILS: CURB RAMPS	SHEET 32	E

FILE NAME : S:\Wauk_Co\NewBerlin\Gov\08.0099 Coffee Rd\Design\021215_PD.dgn PLOT DATE : 10/30/2013 PLOT BY : Nick_B PLOT NAME : PLOT SCALE : 1:10

WISDOT/CADDS SHEET 42

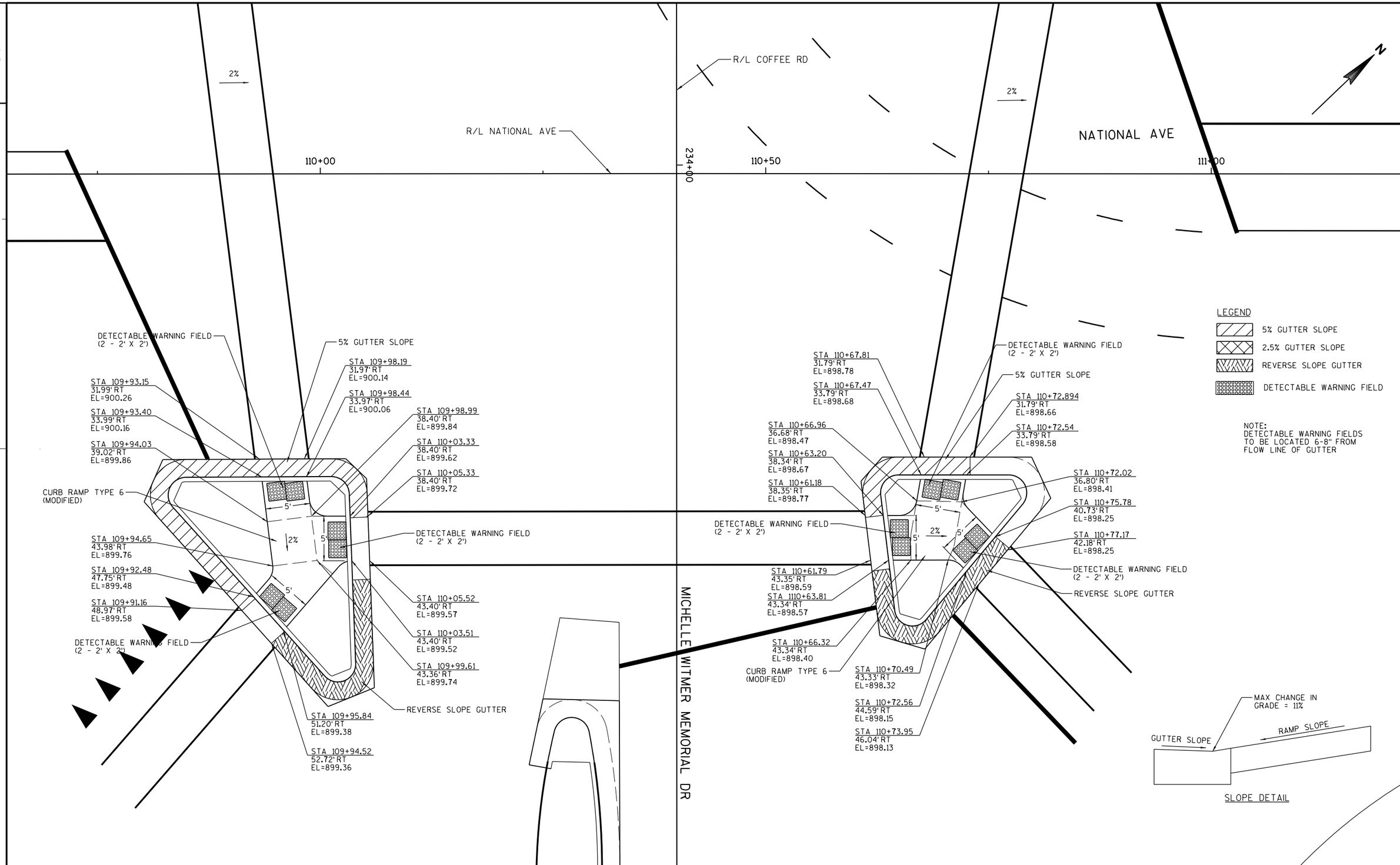

PROJECT NO: 2722-10-70	HWY: COFFEE ROAD	COUNTY: WAUKESHA	PLAN DETAILS: CURB RAMPS	SHEET 33	E

FILE NAME : S:\Wauk_Co\NewBerlin\Gov\08.0099 Coffee Rd\Design\021216_PD.dgn PLOT DATE : 10/30/2013 PLOT BY : Nick_B PLOT NAME : PLOT SCALE : 1:10

WISDOT/CADDS SHEET 42

2

LEGEND

- SILT FENCE
- SOD EROSION CONTROL
- CULVERT PIPE CHECK
- TEMPORARY DITCH CHECK
- DIRECTION OF FLOW
- EROSION BALES
- INLET PROTECTION, TYPE A
- INLET PROTECTION, TYPE C
- RIP RAP MEDIUM

NOTES

1) ALL DISTURBED AREAS TO BE RESTORED WITH 4-INCH SALVAGED TOPSOIL, SEEDING MIXTURE NO. 30, FERTILIZER TYPE B AND MULCH UNLESS NOTED AS SOD.
2) INLET PROTECTION AS APPROPRIATE ARE REQUIRED AT ALL STRUCTURES.
3) CONTRACTOR WILL NOT STORE MATERIALS OR OPERATE EQUIPMENT WITHIN THE WETLAND LIMITS.
4) DITCHES TO BE SODDED THE FIRST VERTICAL FOOT FROM DITCH BOTTOM
5) EROSION CONTROL FEATURES NOT DRAWN TO SCALE. ALL EROSION CONTROL MUST BE INSTALLED WITHIN RIGHT OF WAY OR EASEMENT

N

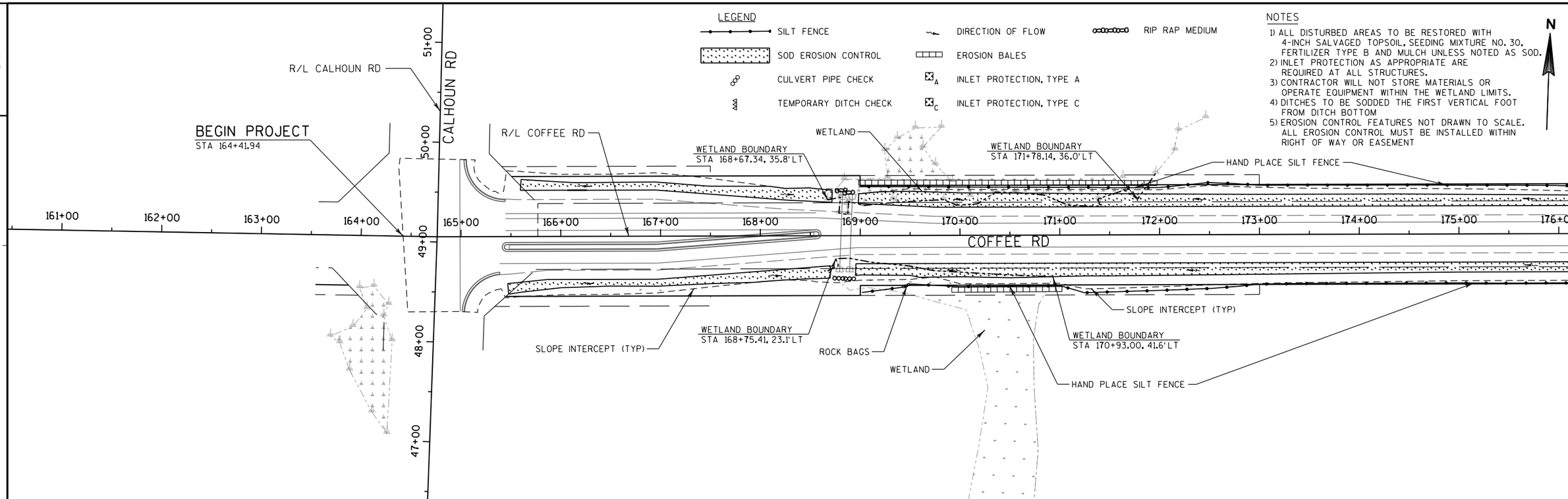

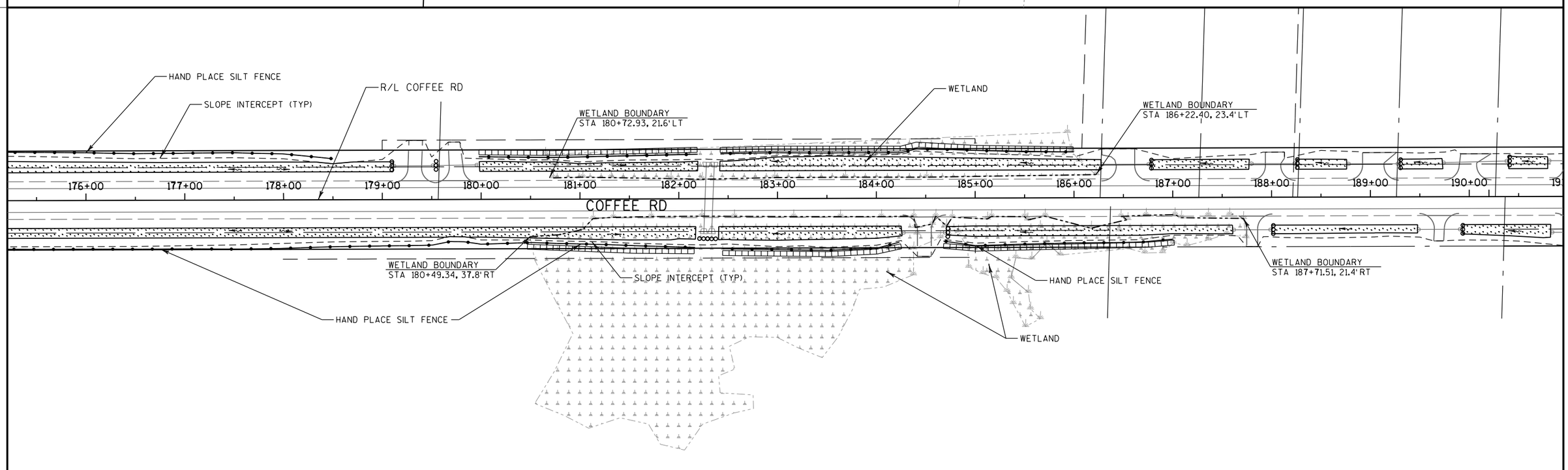

PROJECT NO: 2722-10-70	HWY: COFFEE ROAD	COUNTY: WAUKESHA	EROSION CONTROL PLAN	SHEET 34	E

FILE NAME : S:\Wauk_Co\NewBerlin\Gov\08.0099 Coffee Rd\Design\022001_EC.DGN PLOT DATE : 10/30/2013 PLOT BY : Nick_B PLOT NAME : PLOT SCALE : 1:100

WISDOT/CADDS SHEET 42

2

SEE NEXT SHEET FOR ADDITIONAL DETENTION POND EROSION CONTROL

N

SLOPE INTERCEPT (TYP)

HAND PLACE SILT FENCE

HAND PLACE SILT FENCE

880
885
890
895

191+00 192+00 193+00 194+00 195+00 196+00 197+00 198+00 199+00 200+00 201+00 202+00 203+00 204+00 205+00 206

COFFEE RD

10+00

SLOPE INTERCEPT (TYP)

R/L COFFEE RD

HAND PLACE SILT FENCE

11+00

R/L W ST FRANCIS DR

12+00

13+00

14+00

15+00

R/L 159TH ST

SEE NEXT SHEET FOR ADDITIONAL ST. FRANCIS DR EROSION CONTROL

ST. FRANCIS DR

NOTES

1) ALL DISTURBED AREAS TO BE RESTORED WITH 4-INCH SALVAGED TOPSOIL, SEEDING MIXTURE NO. 30, FERTILIZER TYPE B AND MULCH UNLESS NOTED AS SOD.
2) INLET PROTECTION AS APPROPRIATE ARE REQUIRED AT ALL STRUCTURES.
3) CONTRACTOR WILL NOT STORE MATERIALS OR OPERATE EQUIPMENT WITHIN THE WETLAND LIMITS.
4) DITCHES TO BE SODDED THE FIRST VERTICAL FOOT FROM DITCH BOTTOM
5) EROSION CONTROL FEATURES NOT DRAWN TO SCALE. ALL EROSION CONTROL MUST BE INSTALLED WITHIN RIGHT OF WAY OR EASEMENT

LEGEND

- SILT FENCE
- SOD EROSION CONTROL
- CULVERT PIPE CHECK
- TEMPORARY DITCH CHECK
- DIRECTION OF FLOW
- EROSION BALES
- INLET PROTECTION, TYPE A
- INLET PROTECTION, TYPE C
- RIP RAP MEDIUM

2

15+00

72+00

MONTEREY DR

71+00

R/L S MONTEREY DR

R/L S MOORLAND RD

MOORLAND ROAD

109+00

108+00

107+00

106+00

105+00

42+00

41+00

40+00

39+00

159TH ST

HAND PLACE SILT FENCE

R/L S 159TH ST

R/L COFFEE RD

SLOPE INTERCEPT (TYP)

206+00 207+00 208+00 209+00 210+00 211+00 212+00 213+00 214+00 215+00 216+00 217+00 218+00 219+00 220+00

70+00

COFFEE RD

SLOPE INTERCEPT (TYP)

HAND PLACE SILT FENCE

PROJECT NO: 2722-10-70	HWY: COFFEE ROAD	COUNTY: WAUKESHA	EROSION CONTROL PLAN	SHEET 35	E

FILE NAME : S:\Wauk_Co\NewBerlin\Gov\08.0099 Coffee Rd\Design\022002_EC.DGN PLOT DATE : 10/30/2013 PLOT BY : Nick_B PLOT NAME : PLOT SCALE : 1:100

WISDOT/CADDS SHEET 42

2

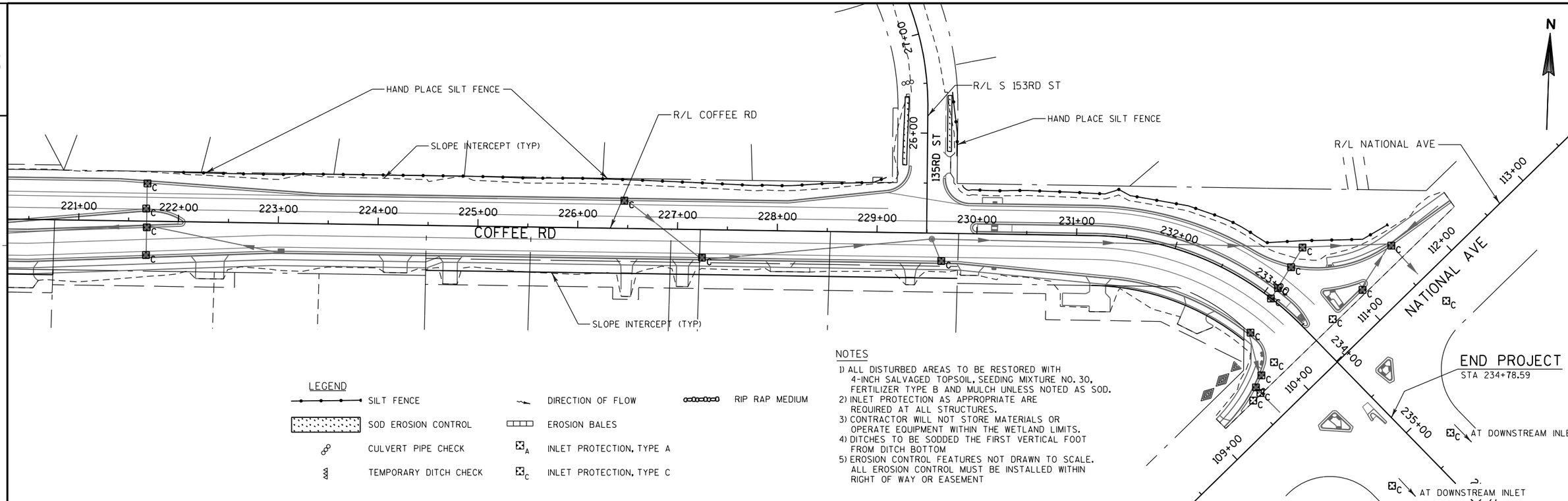

LEGEND

- SILT FENCE
- SOD EROSION CONTROL
- CULVERT PIPE CHECK
- TEMPORARY DITCH CHECK
- DIRECTION OF FLOW
- EROSION BALES
- INLET PROTECTION, TYPE A
- INLET PROTECTION, TYPE C
- RIP RAP MEDIUM

NOTES

1) ALL DISTURBED AREAS TO BE RESTORED WITH 4-INCH SALVAGED TOPSOIL, SEEDING MIXTURE NO. 30, FERTILIZER TYPE B AND MULCH UNLESS NOTED AS SOD.
2) INLET PROTECTION AS APPROPRIATE ARE REQUIRED AT ALL STRUCTURES.
3) CONTRACTOR WILL NOT STORE MATERIALS OR OPERATE EQUIPMENT WITHIN THE WETLAND LIMITS.
4) DITCHES TO BE SODDED THE FIRST VERTICAL FOOT FROM DITCH BOTTOM
5) EROSION CONTROL FEATURES NOT DRAWN TO SCALE. ALL EROSION CONTROL MUST BE INSTALLED WITHIN RIGHT OF WAY OR EASEMENT

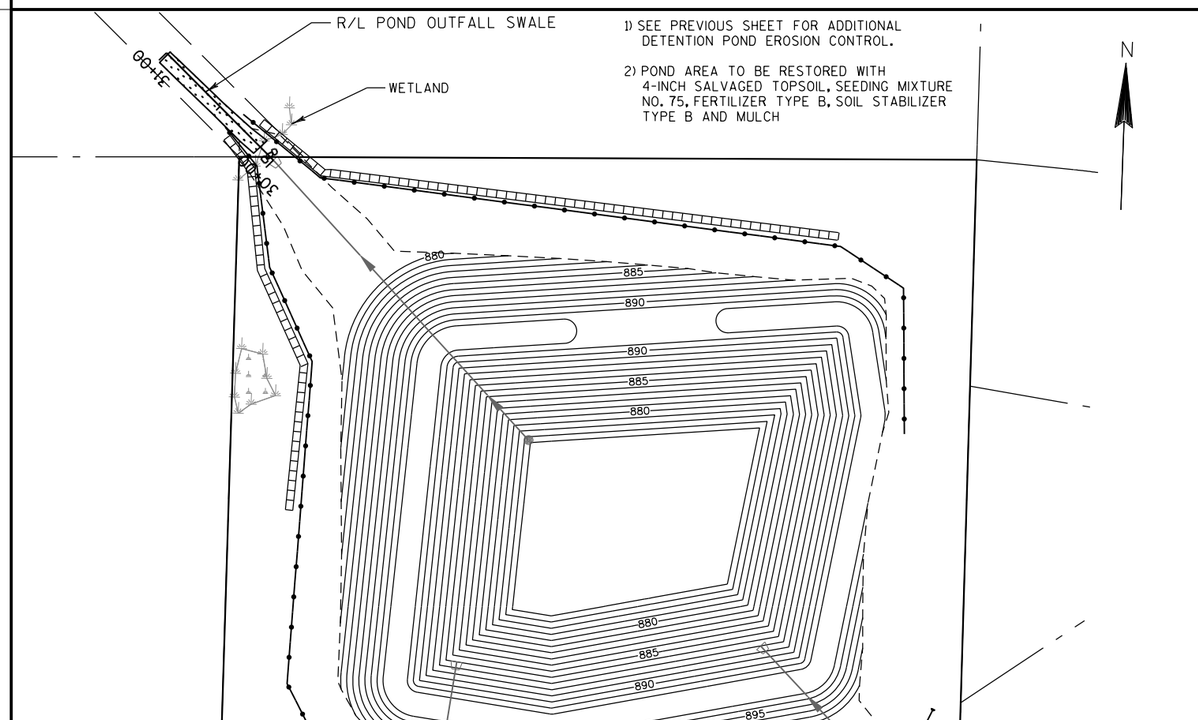

1) SEE PREVIOUS SHEET FOR ADDITIONAL DETENTION POND EROSION CONTROL.

2) POND AREA TO BE RESTORED WITH 4-INCH SALVAGED TOPSOIL, SEEDING MIXTURE NO. 75, FERTILIZER TYPE B, SOIL STABILIZER TYPE B AND MULCH

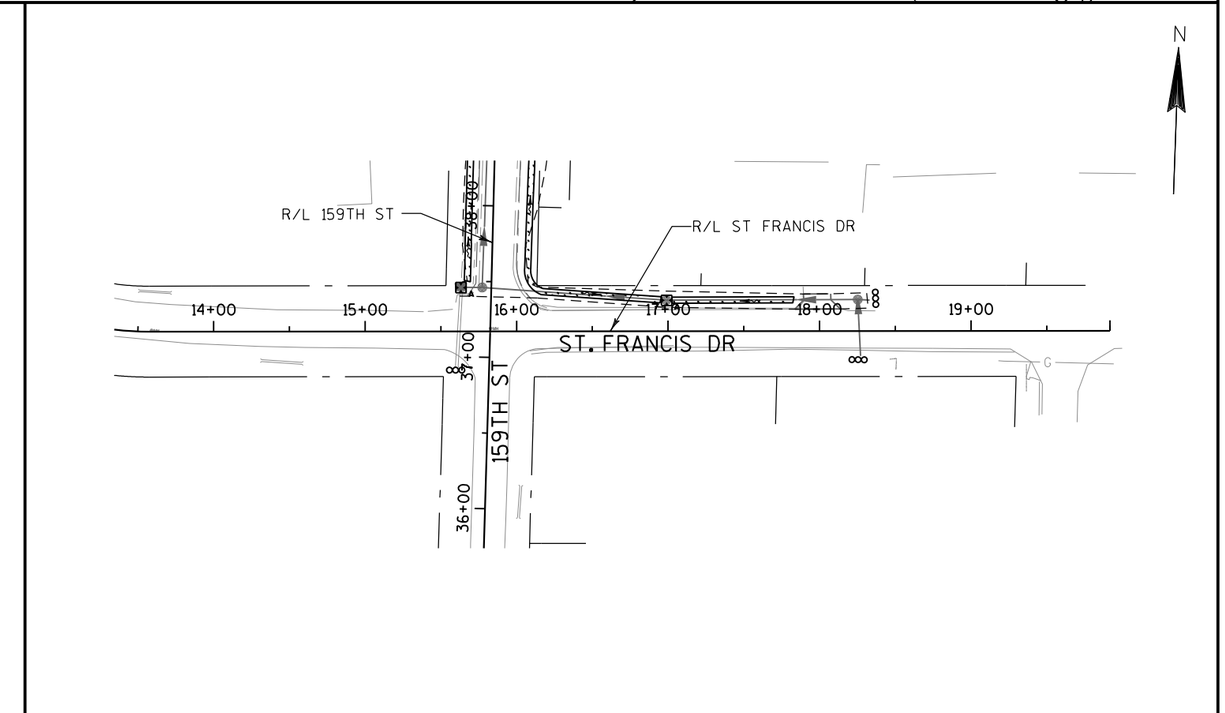

PROJECT NO: 2722-10-70	HWY: COFFEE ROAD	COUNTY: WAUKESHA	EROSION CONTROL PLAN	SHEET 36	E

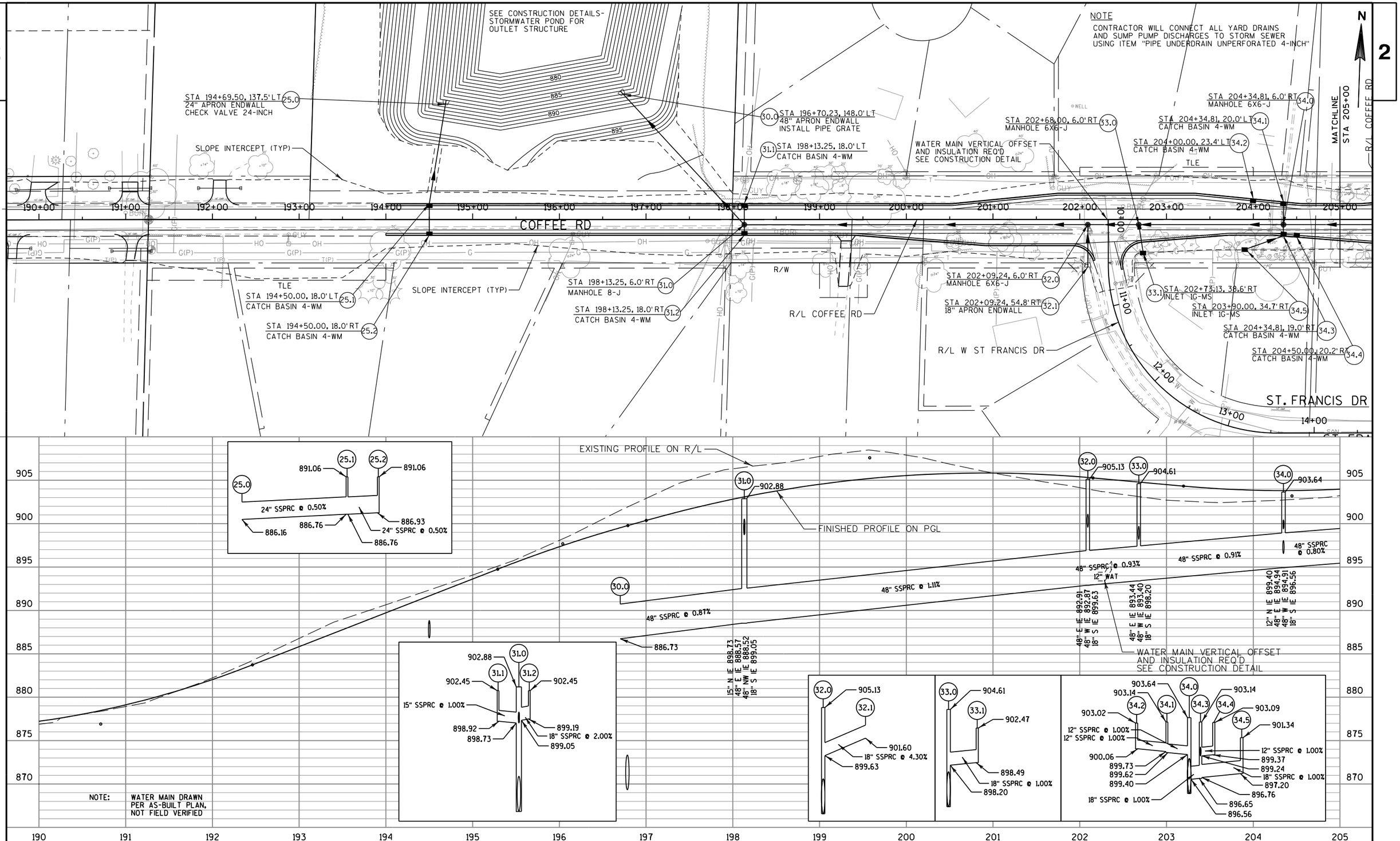

PROJECT NO: 2722-10-70	HWY: COFFEE ROAD	COUNTY: WAUKESHA	STORM SEWER PLAN AND PROFILE: COFFEE ROAD	SHEET 37	E

FILE NAME : S:\Wauk_Co\NewBerlin\Gov\08.0099 Coffee Rd\Design\022502_SS.dgn PLOT DATE : 10/30/2013 PLOT BY : Nick_B PLOT NAME : PLOT SCALE : 1:100

WISDOT/CADDS SHEET 41

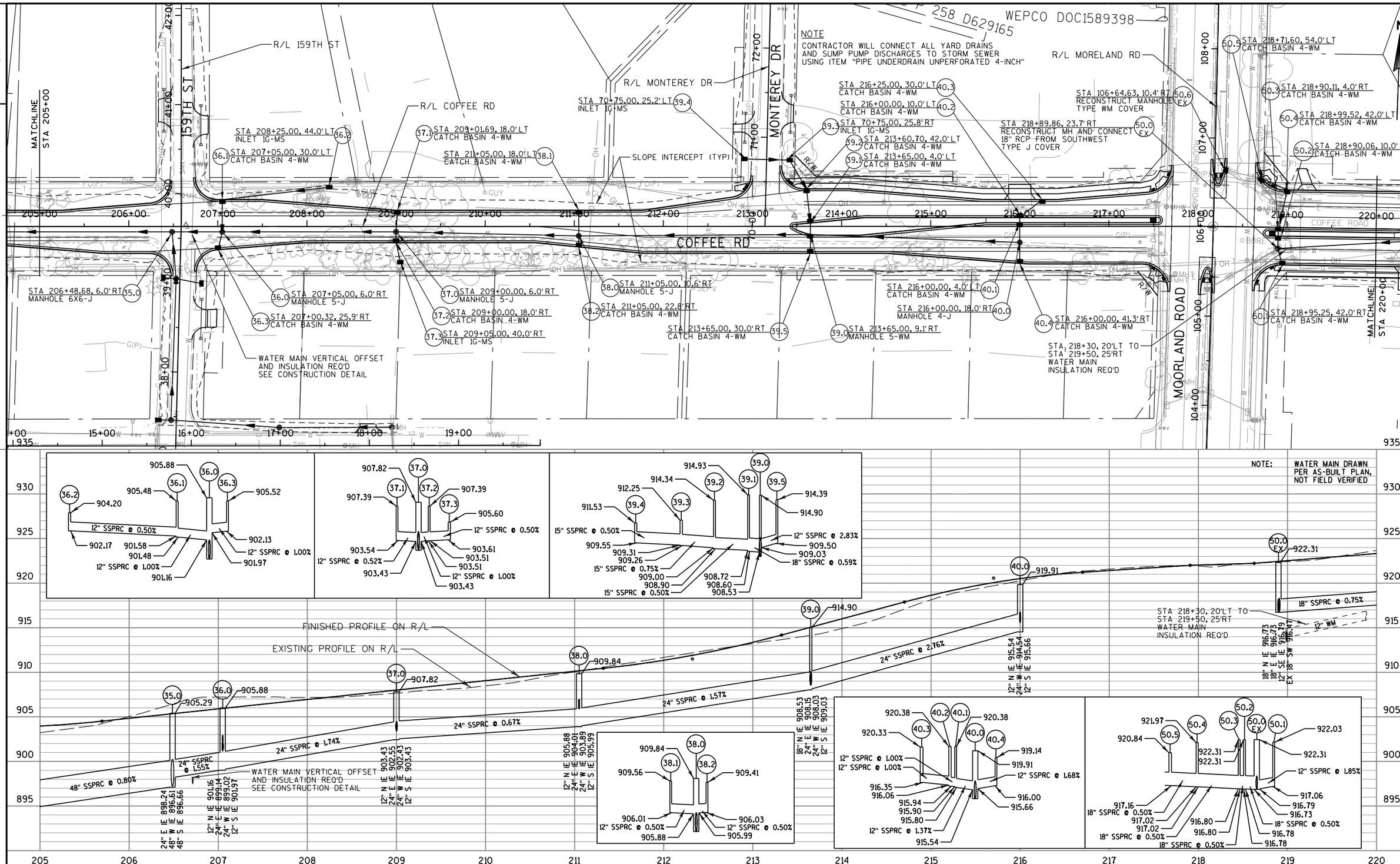

PROJECT NO: 2722-10-70	HWY: COFFEE ROAD	COUNTY: WAUKESHA	STORM SEWER PLAN AND PROFILE: COFFEE ROAD	SHEET 38	E

FILE NAME : S:\Wauk_Co\NewBerlin\Gov\08.0099 Coffee Rd\Design\022503_SS.dgn PLOT DATE : 10/30/2013 PLOT BY : Nick_B PLOT NAME : PLOT SCALE : 1:100

WISDOT/CADDS SHEET 41

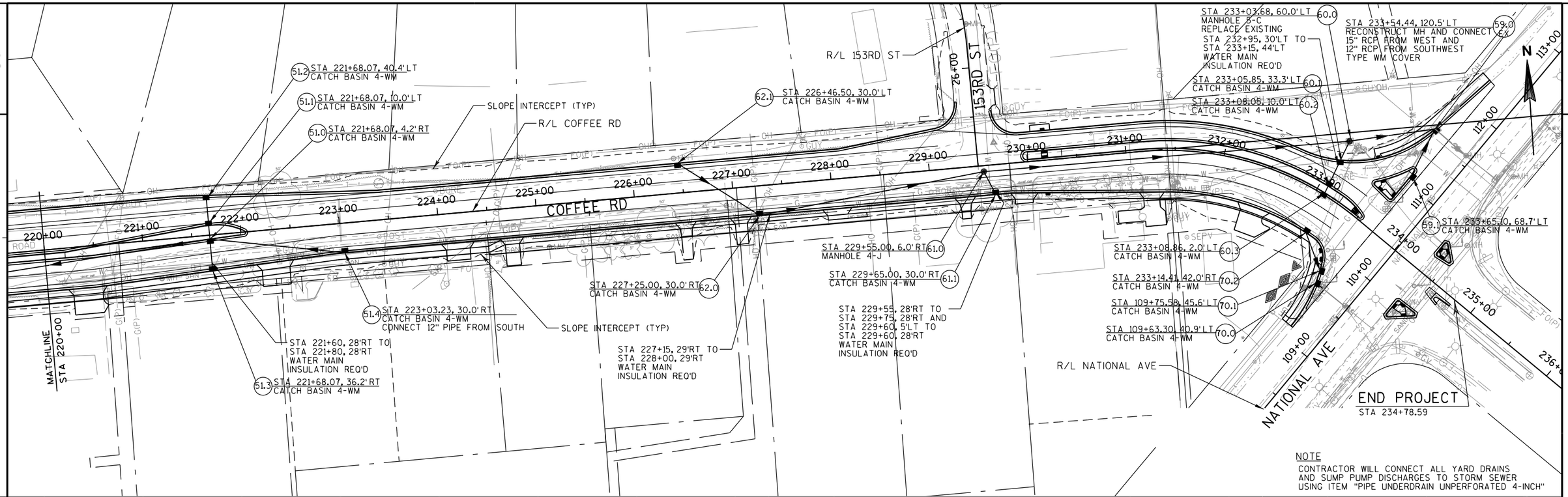

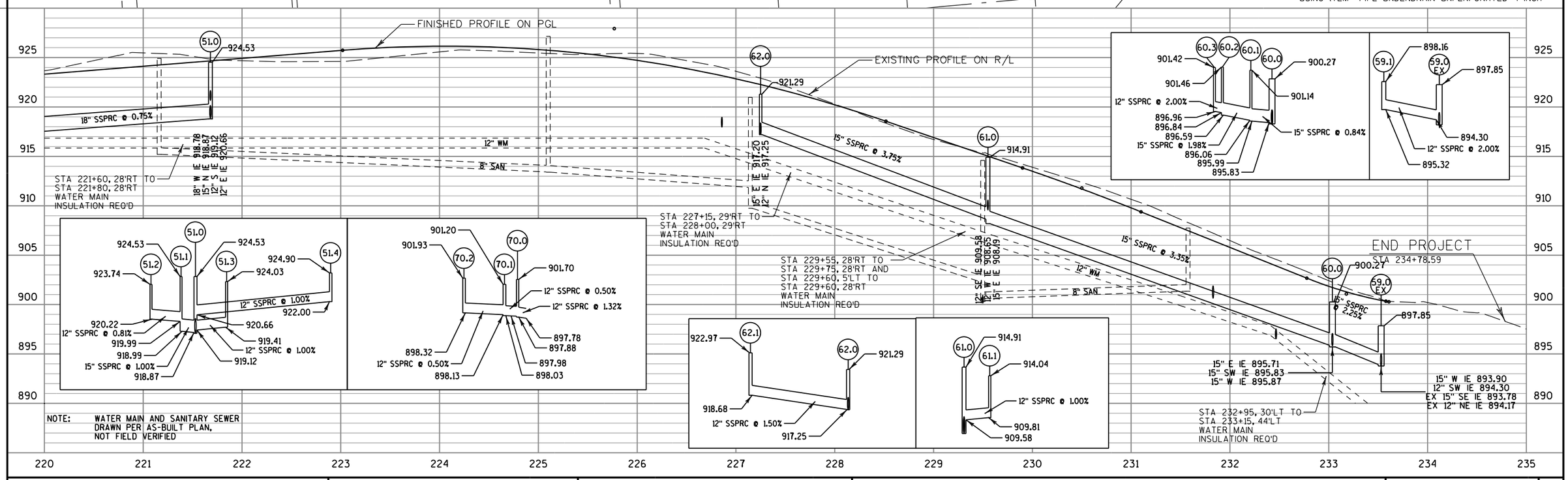

PROJECT NO: 2722-10-70	HWY: COFFEE ROAD	COUNTY: WAUKESHA	STORM SEWER PLAN AND PROFILE: COFFEE ROAD	SHEET 39	E

NOTE
CONTRACTOR WILL CONNECT ALL YARD DRAINS AND SUMP PUMP DISCHARGES TO STORM SEWER USING ITEM "PIPE UNDERDRAIN UNPERFORATED 4-INCH"

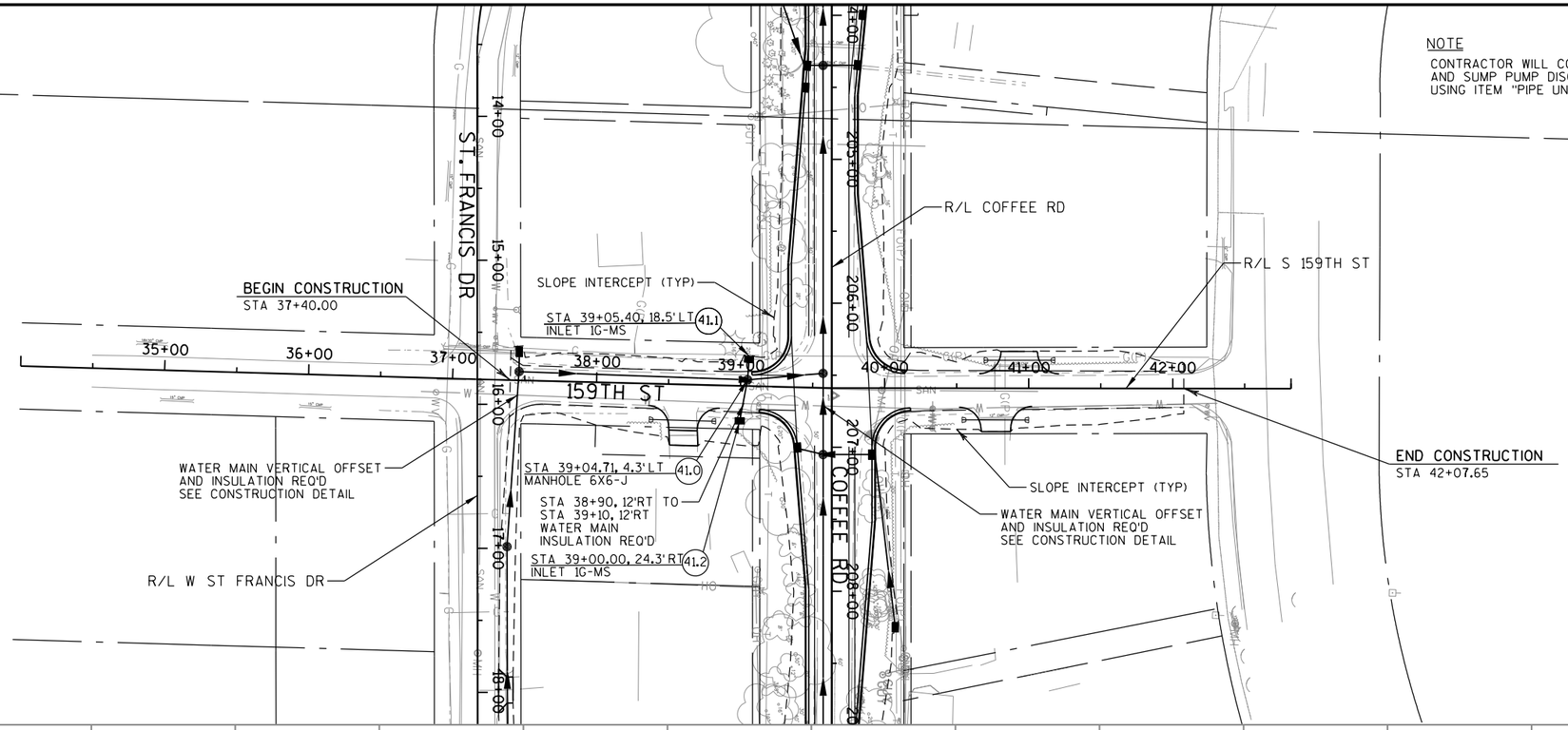

NOTE: WATER MAIN AND SANITARY SEWER DRAWN PER AS-BUILT PLAN, NOT FIELD VERIFIED

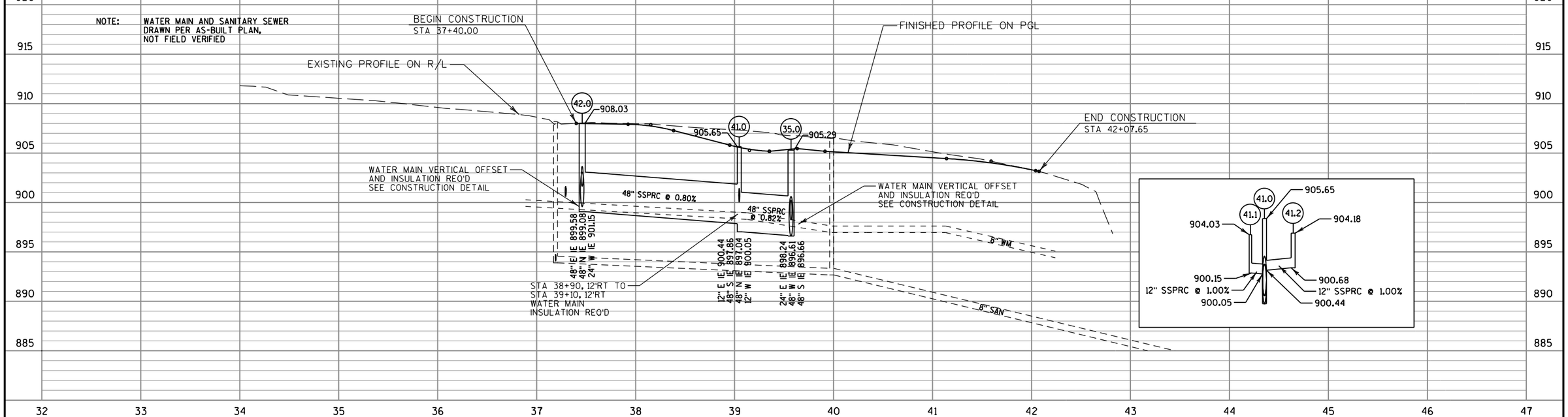

PROJECT NO: 2722-10-70	HWY: COFFEE ROAD	COUNTY: WAUKESHA	STORM SEWER PLAN AND PROFILE: 159TH STREET	SHEET 40	E

2

NOTE
CONTRACTOR WILL CONNECT ALL YARD DRAINS AND SUMP PUMP DISCHARGES TO STORM SEWER USING ITEM "PIPE UNDERDRAIN UNPERFORATED 4-INCH"

R/L COFFEE RD

COFFEE RD

R/L S 159TH ST

159TH ST

STA 15+77.33, 29.0'LT (42.0)
MANHOLE 6X6-J

STA 15+63.40, 29.6'LT (42.1)
INLET 1G-MS

(43.0) STA 16+98.88, 20.5'LT
MANHOLE 6X6-C

(44.0) STA 18+25.24, 20.8'LT
MANHOLE 6X6-J
REMOVE PIPE FROM WEST
CONNECT EXISTING 36"X24" PIPE FROM EAST
CONNECT EXITING 36" PIPE FROM SOUTH
ABANDON PIPE TO NORTH

ST. FRANCIS DR

R/L W ST FRANCIS DR

WATER MAIN VERTICAL OFFSET AND INSULATION REQ'D SEE CONSTRUCTION DETAIL

END CONSTRUCTION
STA 18+35.00

N

NOTE: WATER MAIN AND SANITARY SEWER DRAWN PER AS-BUILT PLAN, NOT FIELD VERIFIED

PROPOSED DITCH PROFILE

EXISTING PROFILE ON R/L

908.03 (42.0)

(43.0) 905.93

(44.0) 906.74

-0.30%

0.80%

42" SSPRC @ 0.50%

42" SSPRC @ 0.50%

12" WM

8" SAN

42" E IE 899.58
48" N IE 899.08
24" W IE 901.15

42" W IE 900.16
42" E IE 900.26

42" W IE 900.86

WATER MAIN VERTICAL OFFSET AND INSULATION REQ'D SEE CONSTRUCTION DETAIL

(42.0) 908.03
(42.1) 905.28
24" SSPRC @ 1.00%
901.25
901.15

PROJECT NO: 2722-10-70	HWY: COFFEE ROAD	COUNTY: WAUKESHA	STORM SEWER PLAN AND PROFILE: ST. FRANCIS DRIVE	SHEET 41	E

2

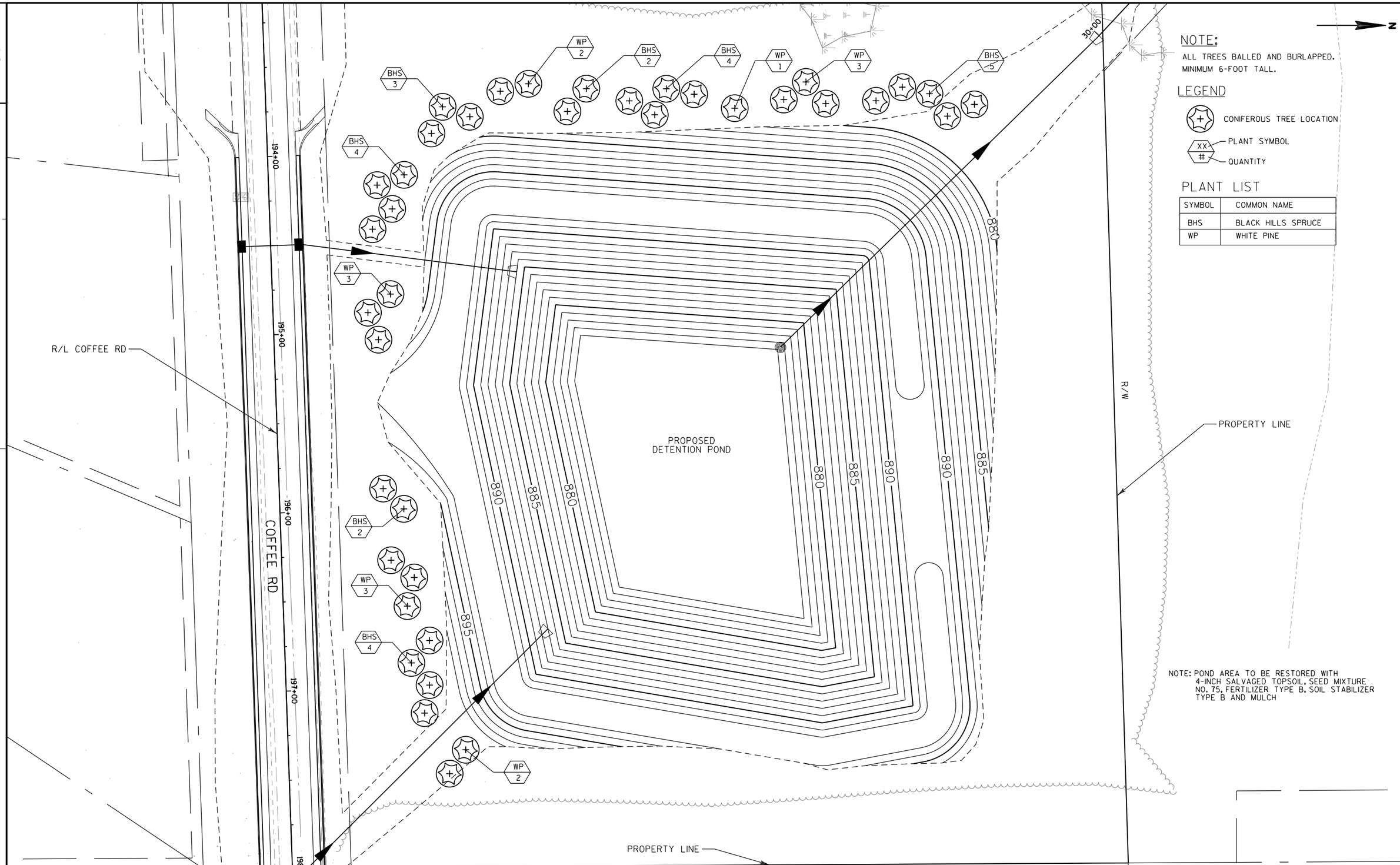

2

PROJECT NO: 2722-10-70	HWY: COFFEE ROAD	COUNTY: WAUKESHA	LANDSCAPING PLAN - STORMWATER POND	SHEET 42	E

FILE NAME : S:\Wauk_Co\NewBerlin\Gov\08.0099 Coffee Rd\Design\023101_PL.dgn PLOT DATE : 10/30/2013 PLOT BY : Nick_B PLOT NAME : PLOT SCALE : 1:50

WISDOT/CADDS SHEET 42

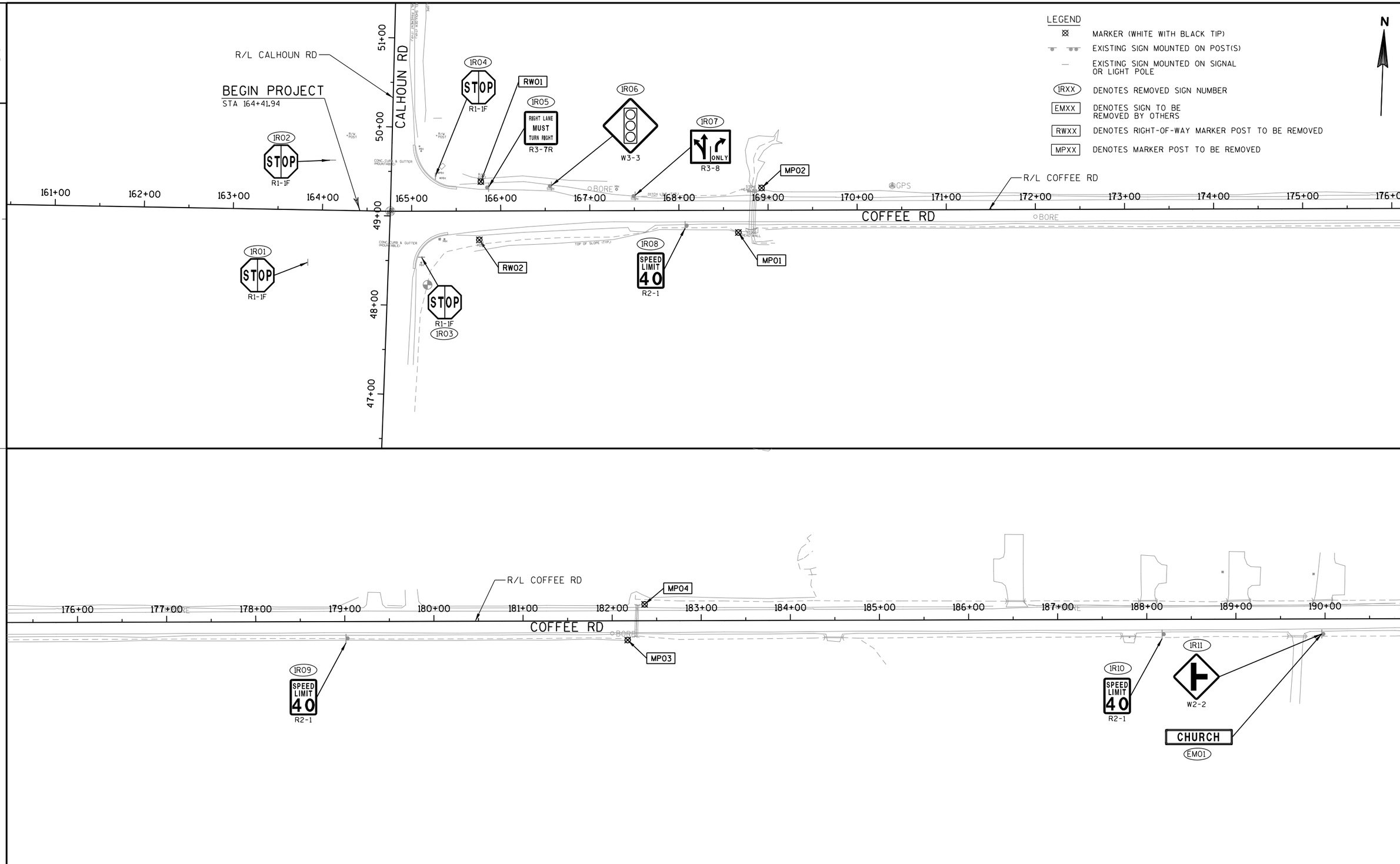

PROJECT NO: 2722-10-70	HWY: COFFEE ROAD	COUNTY: WAUKESHA	SIGN REMOVAL PLAN	SHEET 43	E

FILE NAME : S:\Wauk_Co\NewBerlin\Gov\08.0099 Coffee Rd\Design\023201_PS.DGN PLOT DATE : 10/30/2013 PLOT BY : Nick_B PLOT NAME : PLOT SCALE : 1:100

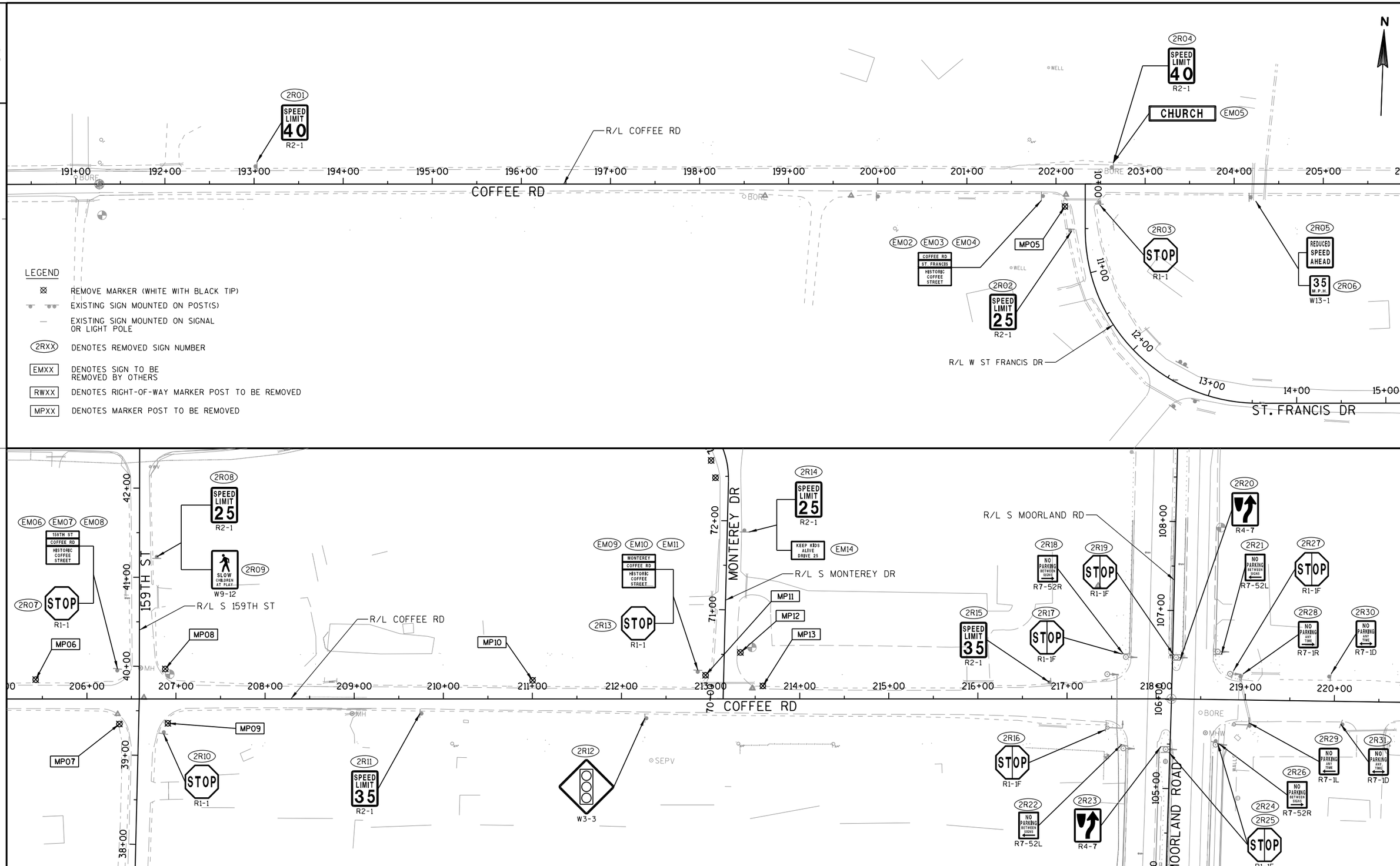

PROJECT NO: 2722-10-70	HWY: COFFEE ROAD	COUNTY: WAUKESHA	SIGN REMOVAL PLAN	SHEET 44	E

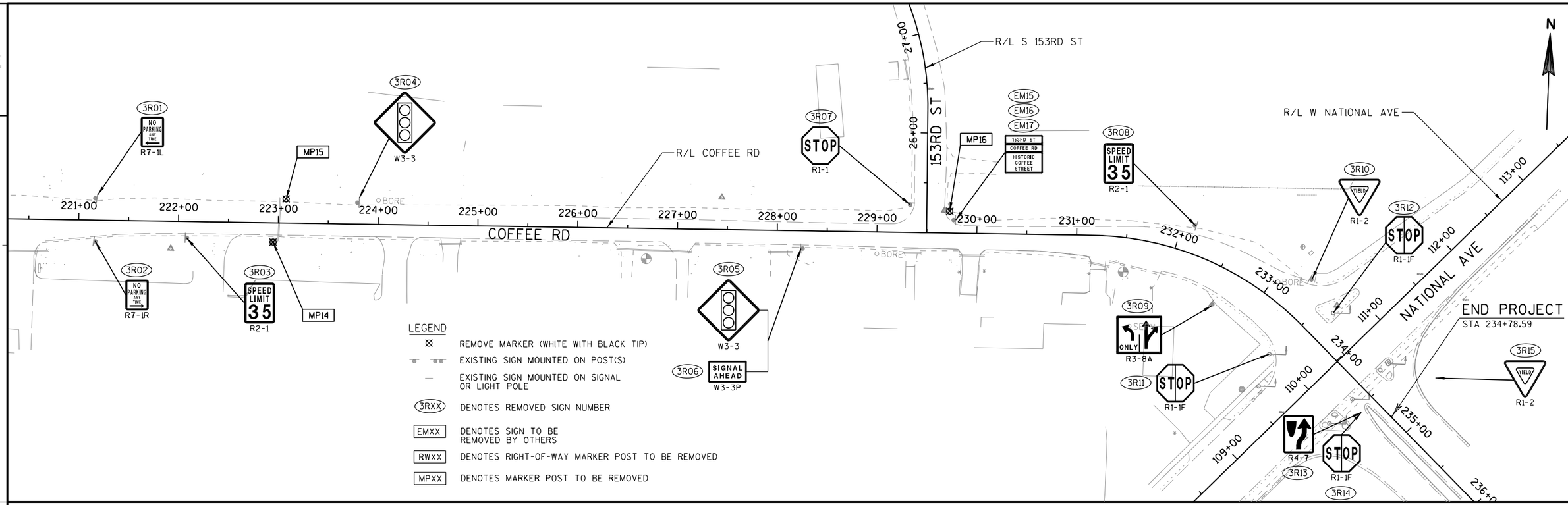

PROJECT NO: 2722-10-70	HWY: COFFEE ROAD	COUNTY: WAUKESHA	SIGN REMOVAL PLAN	SHEET 45	E

FILE NAME : S:\Wauk_Co\NewBerlin\Gov\08.0099 Coffee Rd\Design\023203_PS.DGN PLOT DATE : 10/30/2013 PLOT BY : Nick_B PLOT NAME : PLOT SCALE : 1:100

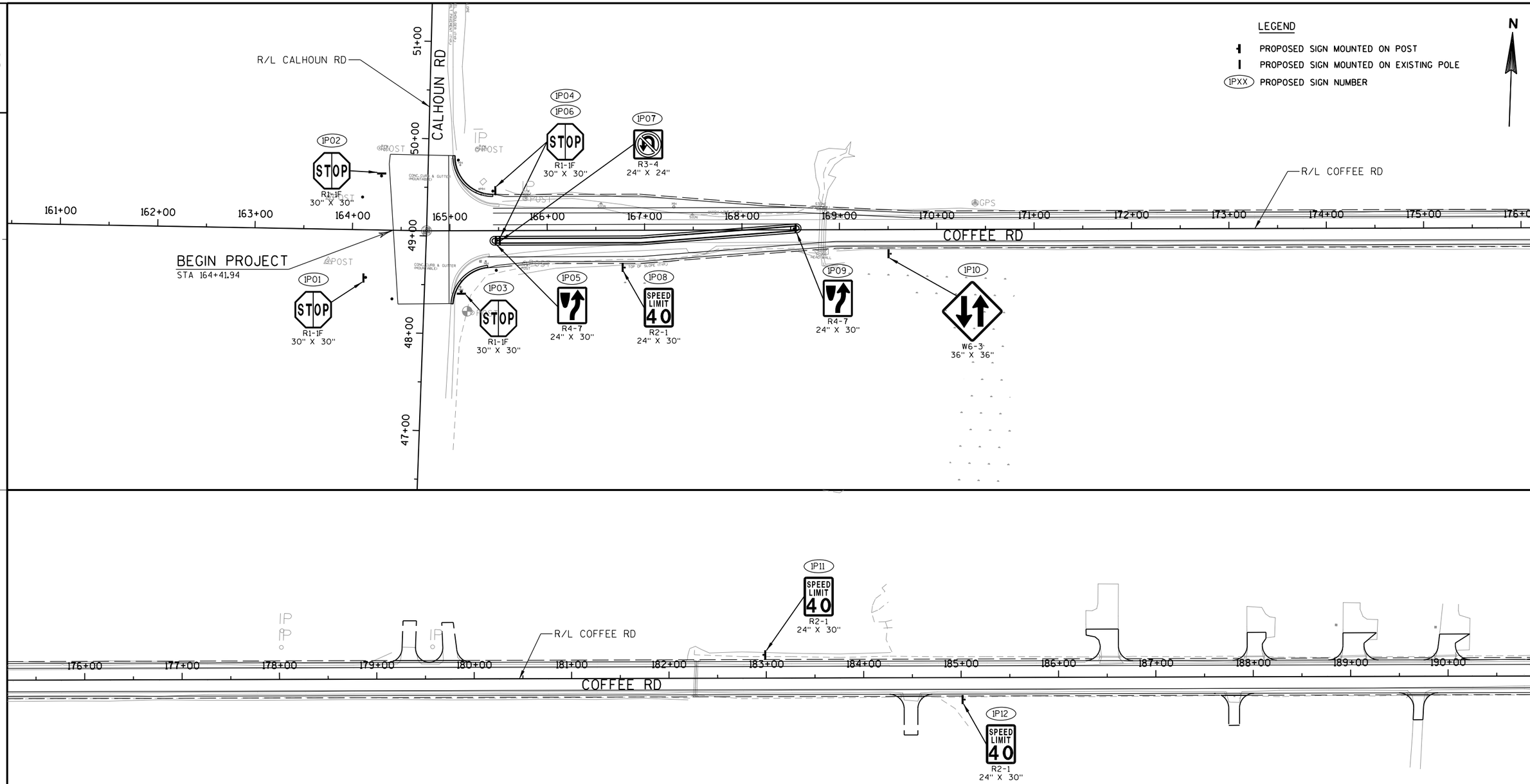

PROJECT NO: 2722-10-70	HWY: COFFEE ROAD	COUNTY: WAUKESHA	PERMANENT SIGNING PLAN	SHEET 46	E

FILE NAME : S:\Wauk_Co\NewBerlin\Gov\08.0099 Coffee Rd\Design\023251_PS.DGN PLOT DATE : 10/30/2013 PLOT BY : Nick_B PLOT NAME : PLOT SCALE : 1:100

LEGEND

- PROPOSED SIGN MOUNTED ON POST
- PROPOSED SIGN MOUNTED ON EXISTING POLE
- (2PXX) PROPOSED SIGN NUMBER

N

R/L COFFEE RD

COFFEE RD

191+00 192+00 193+00 194+00 195+00 196+00 197+00 198+00 199+00 200+00 201+00 202+00 203+00 204+00 205+00 206

(2P01) SPEED LIMIT 40 — R2-1 — 24" X 30"

(2P05) SPEED LIMIT 35 — R2-1 — 24" X 30"

(2P02) SPEED LIMIT 25 — R2-1 — 24" X 30"

(2P03) STOP — R1-1 — 30" X 30"

(2P04) SPEED LIMIT 35 — R2-1 — 24" X 30"

R/L W ST FRANCIS DR

10+00 11+00 12+00 13+00 14+00 15+00

ST. FRANCIS

(2P08) SPEED LIMIT 25 — R2-1 — 24" X 30"

(2P07) STOP — R1-1 — 30" X 30"

R/L S 159TH ST

159TH ST

42+00 41+00 40+00 39+00 38+00

R/L COFFEE RD

(2P10) W6-3 — 36" X 36"

(2P11) STOP — R1-1 — 30" X 30"

(2P12) SPEED LIMIT 25 — R2-1 — 24" X 30"

MONTEREY DR

72+00 71+00 70+00

R/L S MONTEREY DR

R/L S MOORLAND RD

(2P18) NO PARKING BETWEEN SIGNS — R7-52R — 18" X 24"

(2P19) (2P20) STOP — R1-1F — 30" X 30"

(2P14) SPEED LIMIT 35 — R2-1 — 24" X 30"

(2P17) R4-7 — 24" X 30"

108+00 107+00 106+00 105+00

MOORLAND ROAD

(2P21) R4-7 — 24" X 30"

(2P22) NO PARKING BETWEEN SIGNS — R7-52L — 18" X 24"

(2P29) (2P30) STOP — R1-1F — 30" X 30"

206+00 207+00 208+00 209+00 210+00 211+00 212+00 213+00 214+00 215+00 216+00 217+00 218+00 219+00 220+00

COFFEE RD

(2P06) STOP — R1-1 — 30" X 30"

(2P09) SPEED LIMIT 35 — R2-1 — 24" X 30"

(2P13) R4-7 — 24" X 30"

(2P15) (2P16) STOP — R1-1F — 30" X 30"

(2P23) NO PARKING BETWEEN SIGNS — R7-52L — 18" X 24"

(2P24) R4-7 — 24" X 30"

(2P25) (2P26) STOP — R1-1F — 30" X 30"

(2P27) NO PARKING BETWEEN SIGNS — R7-52R — 18" X 24"

(2P28) R4-7 — 24" X 30"

(2P31) SPEED LIMIT 35 — R2-1 — 24" X 30"

PROJECT NO: 2722-10-70	HWY: COFFEE ROAD	COUNTY: WAUKESHA	PERMANENT SIGNING PLAN	SHEET 47	E

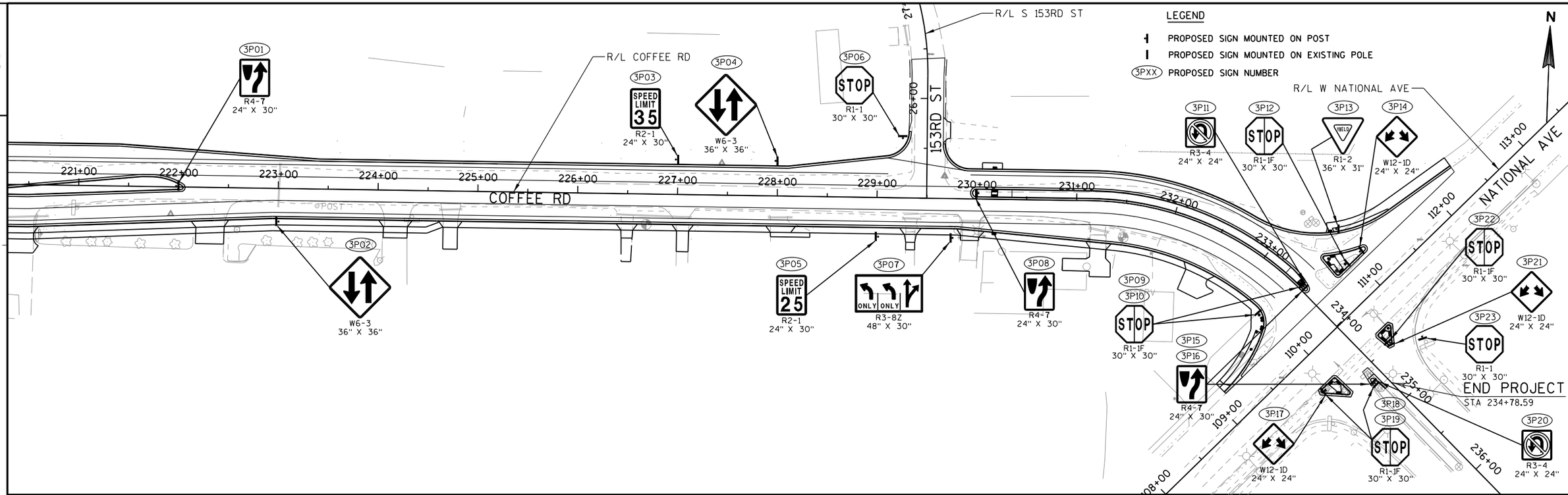

PROJECT NO: 2722-10-70	HWY: COFFEE ROAD	COUNTY: WAUKESHA	PERMANENT SIGNING PLAN	SHEET 48	E

FILE NAME : S:\Wauk_Co\NewBerlin\Gov\08.0099 Coffee Rd\Design\023253_PS.DGN PLOT DATE : 10/30/2013 PLOT BY : Nick_B PLOT NAME : PLOT SCALE : 1:100

WISDOT/CADDS SHEET 42

2

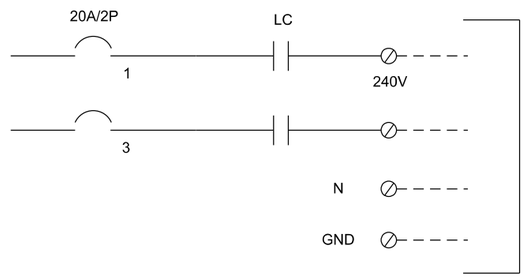

TO STREET LIGHTS CIRCUIT "A"
SIMILAR FOR CIRCUIT "B" EXCEPT
BREAKER 2, 4

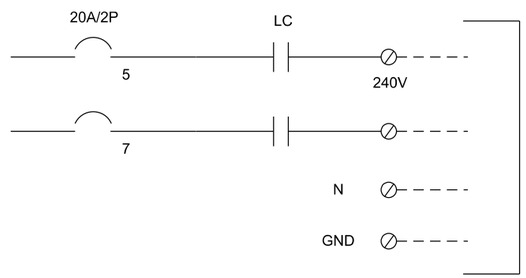

FOR FUTURE STREET LIGHTS

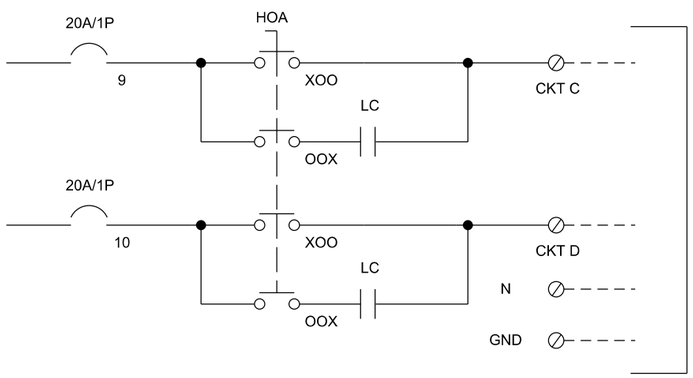

FOR RECEPTACLES AT "A" CIRCUIT POLES.
SIMILAR FOR "B" CIRCUIT POLES EXCEPT
BREAKER 11 AND 12. FOR CIRCUITS "E" AND "F"

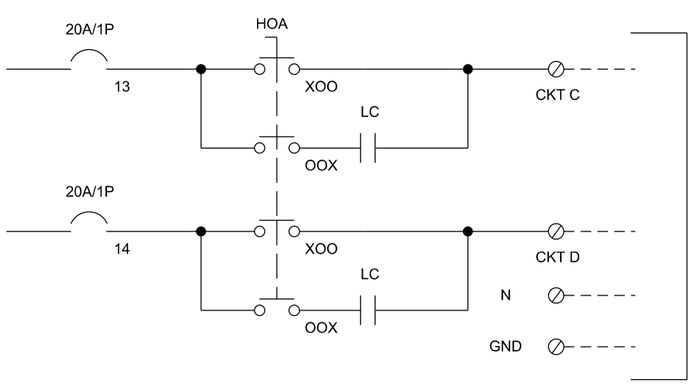

FOR RECEPTACLES ON FUTURE POLES
(BREAKER 5,7)

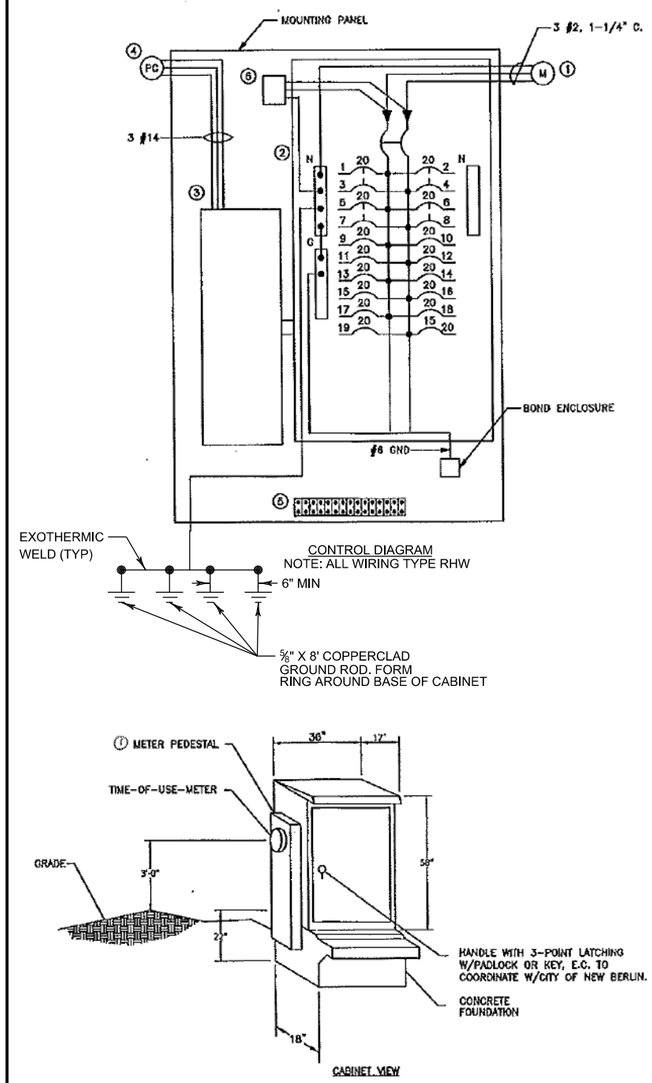

NOTES:

1) ALL CONTROL WIRING SHALL BE COLOR CODED # 14 AWG, USE UNLESS OTHERWISE NOTED.
2) ALL POWER AND CONTROL WIRING SHALL BE NEATLY TRAINED, LABELED AND SUPPORTED.
3) THE LIGHTING CONTROL CABINET SHALL BE COMPLETELY WIRED UP TO THE FIELD WIRING TERMINATION STRIP IN THE CONTRACTORS SHOP AND TESTED PRIOR TO THE INSTALLATION AT THE SITE.
4) THE CONTRACTOR SHALL COMPLY WITH WE ENERGIES SERVICE INSTALLATION REQUIREMENTS.
5) EXTEND APPROPRIATELY SIZED CONDUCTORS FROM THE CONTRACTORS TO THE FIELD TERMINATION STRIP.
6) SEAL CONDUIT OPENING WITH DUCT SEAL.
7) ENCLOSURE SHALL BE GROUNDED.
8) THE ENCLOSURE AND METER PEDESTAL SHALL BE PAINTED TO MATCH LIGHTING UNITS.
9) GROUND WIRE REQUIRED FOR EACH LIGHTING CIRCUIT.
10) ALL CONDUITS TO LIGHTING CIRCUITS TO BE PVC PITCH CONDUIT TO ONE END OF RUN AND DRILL ¼" DRAIN HOLE IN CONDUIT TO ALLOW WATER DRAINAGE.
11) ELECTRICAL CONTRACTOR TO PROVIDE GRAVEL BASE AND REINFORCEMENT AS REQUIRED FOR STRUCTURAL INTEGRITY OF CONCRETE FOUNDATION
12) CABINET TO OPEN AWAY FROM SIDEWALK.

EQUIPMENT

1. WE ENERGIES APPROVED 100A, 1PH, 3W, 120 / 240 V METER PEDESTAL, TIME AND USE METER BY WE ENERGIES, SEE LATEST EDITION OF WE ENERGIES ELECTRICAL SERVICE AND METERING MANUAL.
2. 100A MCB, 120 / 240 V 1PH, 3W, 20CKT NEMA 1 PANEL BOARD WITH BOLT-ON MOLDED CASE BRANCH CIRCUIT BREAKERS.
3. 300 V MECHANICALLY HELD 12 POLE CONTRACTOR WITH 120 VOLT CONTROL COIL, TWO WIRE INTERFACE RELAY AND HAND-OFF-AUTO SWITCH IN FACTORY ASSEMBLED NEMA 1 ENCLOSURE.
4. PHOTOCELL MOUNTED ON EAST SIDE OF CABINET.
5. FIELD WIRING TERMINATION STRIP
6. SURGE ARRESTER.

CONTROL CABINET CR
NOT TO SCALE

2

PROJECT NO: 2722-10-70	HWY: COFFEE ROAD	COUNTY: WAUKESHA	LIGHTING PLAN DETAILS	SHEET 49	E

LEGEND

SINGLE LIGHTING UNIT - TYPE A

STATION
X-Y-(Z)

WHERE:
X = CIRCUIT
Y = POLE ID PER CIRCUIT X
(Z) = RECEPTACLE CIRCUIT

DISTRIBUTION CENTER

PULL BOX 24" X 36"

NOTES:

1) ALL POLES ARE TYPE A
2) ACR = CIRCUIT A ON DISTRIBUTION CENTER CR
   BCR = CIRCUIT B ON DISTRIBUTION CENTER CR
3) CIRCIUT C,N,D, & E,N,F ARE 3 WIRE CIRCUITS FOR 120V RECEPTACLE LOADS.
4) ALTERNATE POLES.

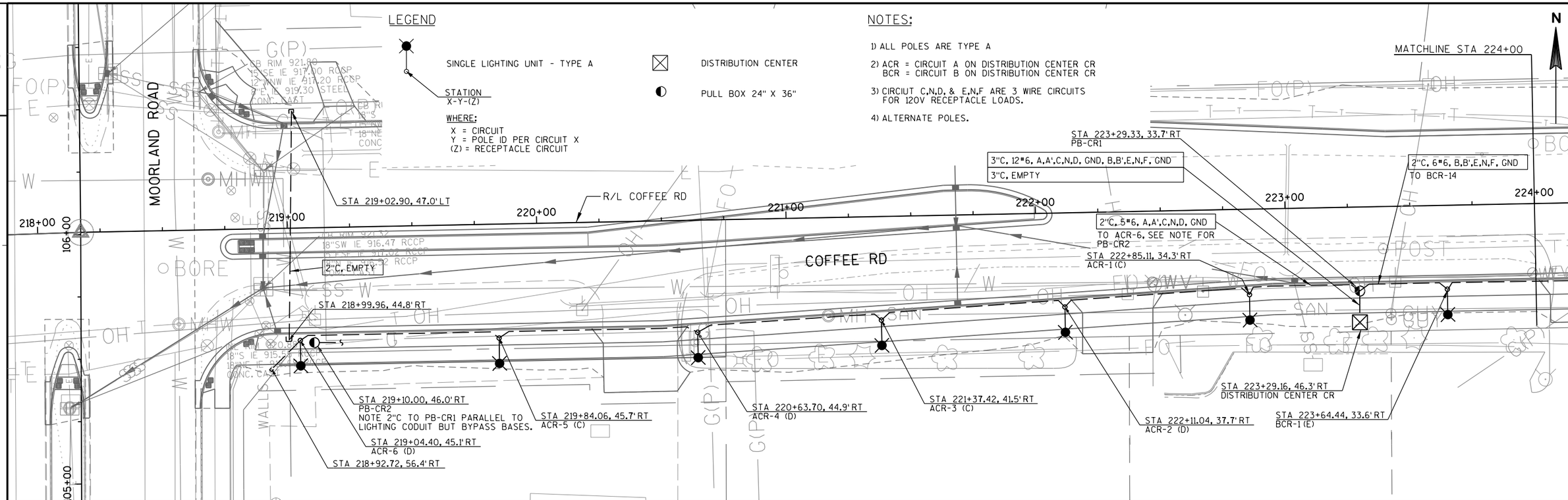

PROJECT NO: 2722-10-70	HWY: COFFEE ROAD	COUNTY: WAUKESHA	LIGHTING PLAN	SHEET 50	E

FILE NAME : S:\Wauk_Co\NewBerlin\Gov\08.0099 Coffee Rd\Design\023501_LP.dgn PLOT DATE : 11/20/2013 PLOT BY : wally_w PLOT NAME : PLOT SCALE : 1:40

WISDOT/CADDS SHEET 42

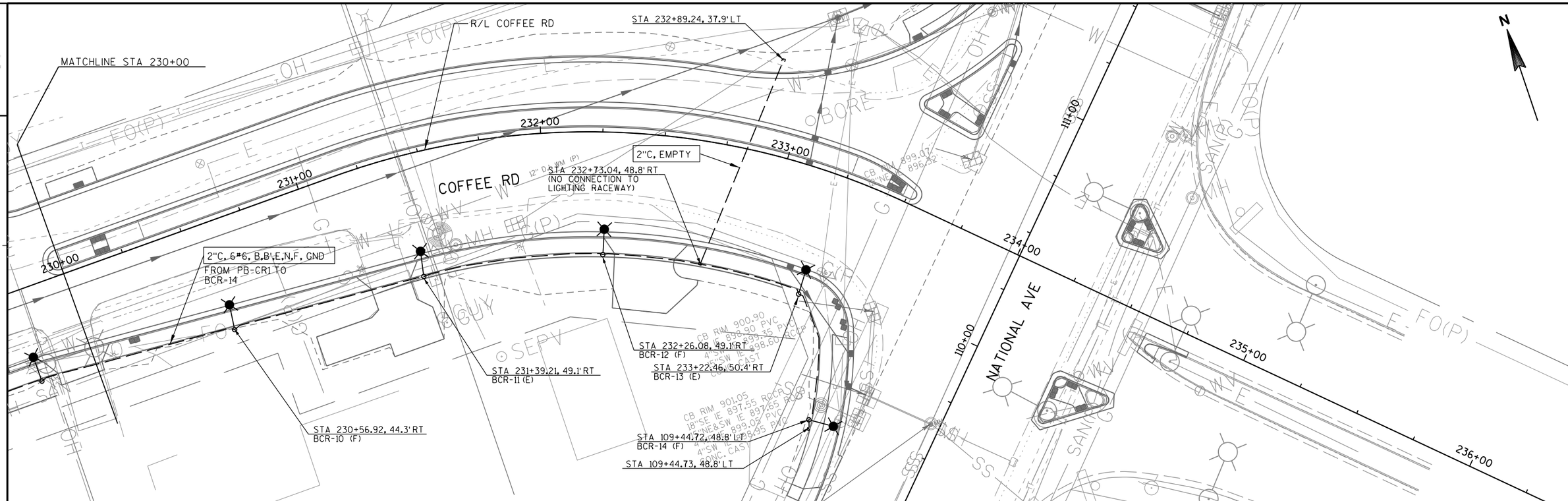

LEGEND

SINGLE LIGHTING UNIT - TYPE A

STATION
X-Y-(Z)

WHERE:

X = CIRCUIT
Y = POLE ID PER CIRCUIT X
(Z) = RECEPTACLE CIRCUIT

DISTRIBUTION CENTER

PULL BOX 24" X 36"

NOTES:

1) ALL POLES ARE TYPE A

2) ACR = CIRCUIT A ON DISTRIBUTION CENTER CR
   BCR = CIRCUIT B ON DISTRIBUTION CENTER CR

3) CIRCIUT C,N,D, & E,N,F ARE 3 WIRE CIRCUITS
   FOR 120V RECEPTACLE LOADS.

4) ALTERNATE POLES.

PROJECT NO: 2722-10-70	HWY: COFFEE ROAD	COUNTY: WAUKESHA	LIGHTING PLAN	SHEET 51	E

LEGEND

- CONTROL CABINET
- NONMETALLIC CONDUIT 2", UNLESS OTHERWISE NOTED
- LOOP DETECTOR CONDUIT 1" NONMETALLIC
- SIGNAL HEAD, TRAFFIC SIGNAL STANDARD, PEDESTAL BASE
- (XX) SIGNAL HEAD, TRAFFIC SIGNAL POLE, TRANSFORMER BASE
- LUMINAIRE, TRAFFIC POLE, TRANSFORMER BASE
- * LOOP DETECTOR IN 1" NONMETALLIC CONDUIT
- PULL BOX, 24" X 36"
- PULL BOX, 24" X 42"
- B EVP DESIGNATOR
- EVP DETECTOR HEAD & LED CONFIRMATION LIGHT
- SIGNAL HEAD NUMBER
- R RED CIRCULAR INDICATOR
- Y YELLOW CIRCULAR INDICATOR
- G GREEN CIRCULAR INDICATOR
- Y YELLOW ARROW
- G GREEN ARROW

NOTE: ALL LENSES ARE 12-INCH
GRAYSHADE REPRESENTS EXISTING

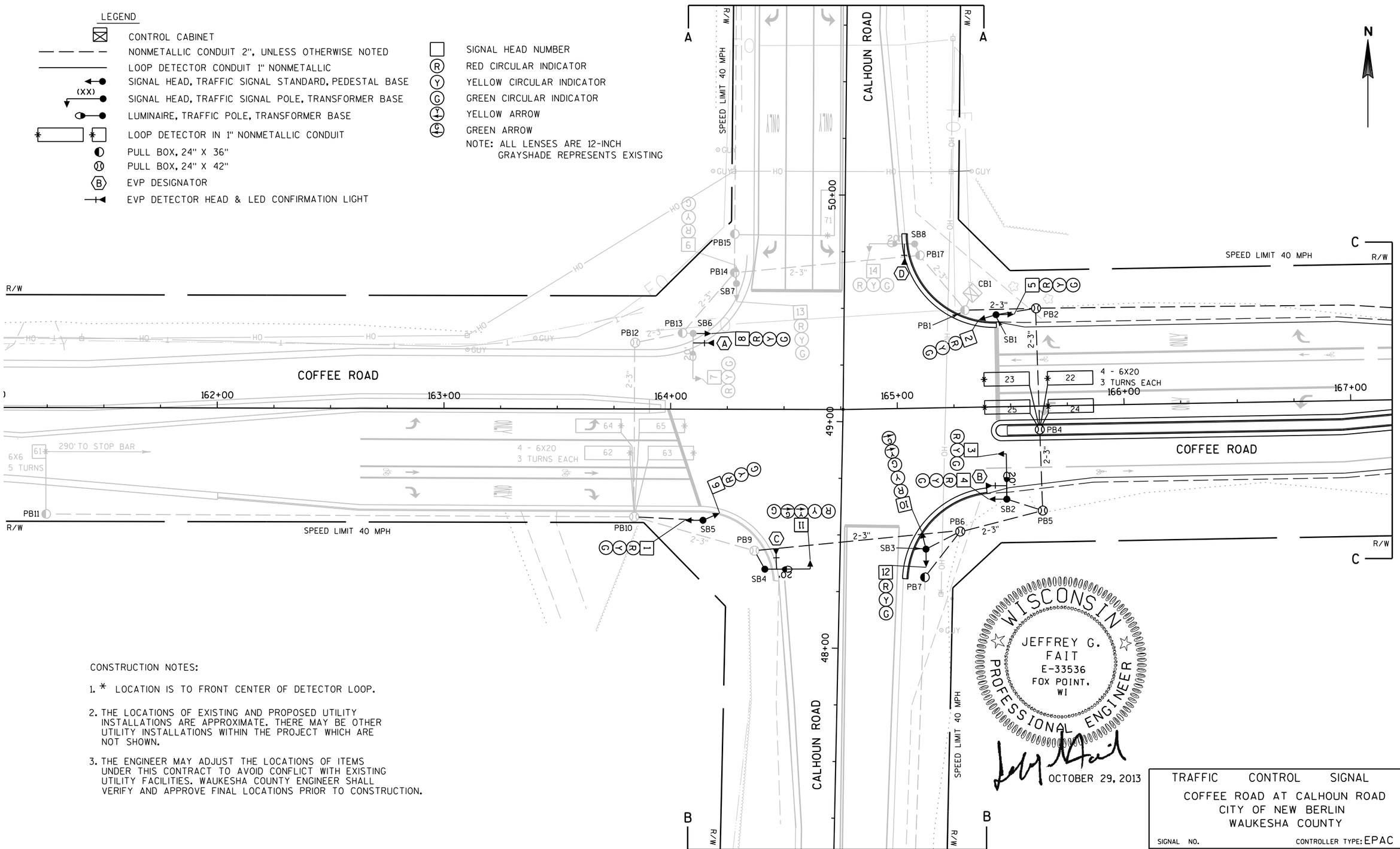

CONSTRUCTION NOTES:

1. * LOCATION IS TO FRONT CENTER OF DETECTOR LOOP.
2. THE LOCATIONS OF EXISTING AND PROPOSED UTILITY INSTALLATIONS ARE APPROXIMATE. THERE MAY BE OTHER UTILITY INSTALLATIONS WITHIN THE PROJECT WHICH ARE NOT SHOWN.
3. THE ENGINEER MAY ADJUST THE LOCATIONS OF ITEMS UNDER THIS CONTRACT TO AVOID CONFLICT WITH EXISTING UTILITY FACILITIES. WAUKESHA COUNTY ENGINEER SHALL VERIFY AND APPROVE FINAL LOCATIONS PRIOR TO CONSTRUCTION.

WISCONSIN
JEFFREY G. FAIT
E-33536
FOX POINT, WI
PROFESSIONAL ENGINEER

OCTOBER 29, 2013

TRAFFIC CONTROL SIGNAL
COFFEE ROAD AT CALHOUN ROAD
CITY OF NEW BERLIN
WAUKESHA COUNTY

SIGNAL NO. CONTROLLER TYPE: EPAC

DESIGNED BY: TAD, INC.
REVISED BY:

PAGE 1 OF 3

PROJECT NO: 2722-10-70	HWY: COFFEE ROAD	COUNTY: WAUKESHA	TRAFFIC SIGNAL PLAN	SHEET 52	E

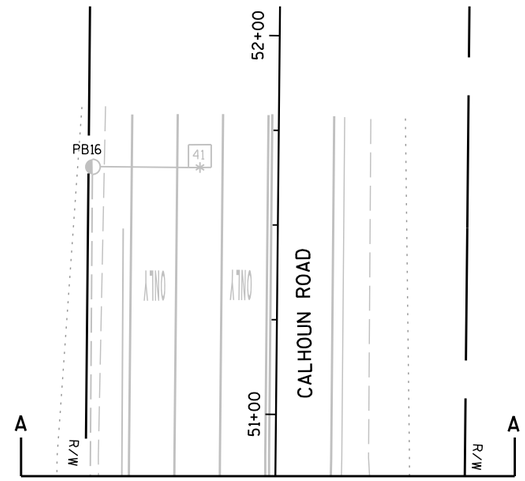

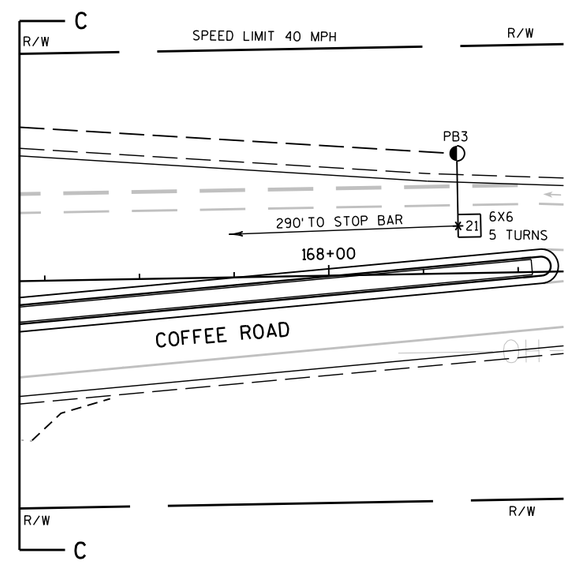

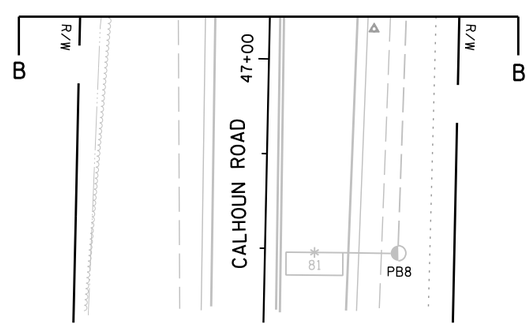

TRAFFIC CONTROL SIGNAL

COFFEE ROAD AT CALHOUN ROAD
CITY OF NEW BERLIN
WAUKESHA COUNTY

SIGNAL NO. CONTROLLER TYPE: EPAC

DESIGNED BY: TAD, INC.
REVISED BY:

PAGE 2 OF 3

PROJECT NO:2722-10-70	HWY:COFFEE ROAD	COUNTY:WAUKESHA	TRAFFIC SIGNAL PLAN	SHEET 53	E

SEQUENCE OF OPERATION

N

		01 (NOT USED)						02 (⇐)						03 (NOT USED)						04 (⇓)						FLASH
		R/W	CLEAR TO					R/W	CLEAR TO					R/W	CLEAR TO					R/W	CLEAR TO					
	HEAD NUMBERS		**						**						**						**					
	01																									
	02	5,6,7,8						G	Y	R										R	R	R				R
	03																									
	04	9,10,11						R	R	R										G	Y	R				R
RING 1	05																									
	06	1,2,3,4						R	R	R										R	R	R				R
	07	10,11						-	-	-										-	-	-				-
	08	12,13,14						R	R	R										R	R	R				R
	02P																									
	04P																									
	06P																									
	08P																									
	OL'A'																									
	OL'B'																									
	OL'C'																									
	OL'D'																									

		05 (NOT USED)						06 (⇒)						07 (↳)						08 (⇑)					
		R/W	CLEAR TO					R/W	CLEAR TO					R/W	CLEAR TO					R/W	CLEAR TO				
	HEAD NUMBERS		**						**						**						**				
	01																								
	02	5,6,7,8						R	R	R				R	R	R				R	R	R			
	03																								
RING 2	04	9,10,11						R	R	R				R	R	R				R	R	R			
	05																								
	06	1,2,3,4						G	Y	R				R	R	R				R	R	R			
	07	10,11						-	-	-				G ←	Y ←	-				-	-	-			
	08	12,13,14						R	R	R				R	R	R				G	Y	R			
	02P																								
	04P																								
	06P																								
	08P																								
	OL'A'																								
	OL'B'																								
	OL'C'																								
	OL'D'																								

BARRIER

** CLEARANCE TO A PHASE IN CONFLICT WITH THIS PHASE ON (SEE CHART 1)

CHART 1

PHASE ON	NONCONFLICTING PHASE ALLOWED TO TIME CONCURRENTLY	PHASES IN CONFLICT WITH PHASE ON
1		
2	6	4,7,8
3		
4	7 OR 8	2,6
5		
6	2	4,7,8
7		
8	4	1,2,7

DETECTOR LOGIC

DETECTOR NUMBER	DETECTOR INPUT	DETECTOR OPERATION: CALLS AND EXTENDS	CALLS ONLY	EXTENDS ONLY	PHASE CALLED	PHASE EXTENDED	DETECTOR DISCONNECT PHASE	CALLING DELAY	EXTENSION STRETCH	SIZE	NUMBER OF TURNS
21	1			X		2			X	6X6	5
22	2	X			2	2				6X20	3
23	2	X			2	2				6X20	3
24	3	X			2	2				6X20	3
25	3	X			2	2				6X20	3
41	4	X			4	4				6X6	*
61	5			X		6			X	6X6	*
62	6	X			6	6				6X20	3
63	6	X			6	6				6X20	3
64	7	X			6	6				6X20	3
65	7	X			6	6				6X20	3
71	8	X			7	7				6X20	*
81	9	X			8	8				6X10	*

* = EXISTING LOOP

CONTROLLER LOGIC

PHASE NUMBER	PHASE LOCKING	DUAL ENTRY W / Ø	PHASE RECALL	PHASE ACTIVE
1				
2		6		X
3				
4	X	8	MIN	X
5				
6		2		X
7		4		X
8	X	4	MIN	X

OVERLAPS

O.L. "A" =
O.L. "B" =
O.L. "C" =
O.L. "D" =

SPECIAL OVERLAPS

	PROTECTIVE	PERMISSIVE
O.L. "A" =	-	-
O.L. "B" =	-	-
O.L. "C" =	-	-
O.L. "D" =	-	-

TYPE OF INTERCONNECT COMMUNICATION	
NONE	
TBC	X
CLOSED LOOP TWISTED PAIR*	
CLOSED LOOP FIBER OPTIC*	
RADIO	
*LOCATION OF MASTER CONTROLLER NO: S-	
SIGNAL SYSTEM #: SS- -	

TYPE OF PRE-EMPT	
NONE	
RAILROAD	
EMERGENCY VEHICLE	
OPTICOM	X
TOMAR	
HARDWIRE	
OTHER	
LIFT BRIDGE	
QUEUE DETECTOR	

TYPE OF LIGHTING	
BY OTHER AGENCY	
IN TRAFFIC SIGNAL CABINET	X
IN SEPARATE DOT LIGHTING CABINET	

EMERGENCY VEHICLE PREEMPTION SEQUENCE

EMERGENCY VEHICLE DETECTOR	A	B	C	D
MOVEMENT	←	→	↓↘	↑
PHASE	2	6	4+7	8

TERMINATE EACH PREEMPTION SEQUENCE WITH AN ALL-RED INTERVAL
AFTER PREEMPTION SEQUENCE 2 OR 6, CONTROLLER SHALL RETURN TO PHASES 2+6.
AFTER PREEMPTION SEQUENCE 4+7 OR 8, CONTROLLER SHALL RETURN TO PHASES 4+8.

GENERAL NOTES:

1. ANY ACTUATED PHASE FOR WHICH THERE IS NO CALL SHALL BE SKIPPED.
2. WHEN ONE PHASE IS ON ALONE, ANY NONCONFLICTING PHASE MAY START TIMING CONCURRENTLY WITHOUT A CLEARANCE INTERVAL. (SEE CHART 1 AT LEFT.)
3. IF ANY OPPOSING THRU PHASES ARE TIMING CONCURRENTLY, THEY SHALL TERMINATE TOGETHER DUE TO PERMISSIVE LEFT TURN CONFLICT.

COFFEE ROAD AT CALHOUN ROAD
CITY OF NEW BERLIN
WAUKESHA COUNTY

SIGNAL NO.

CONTROLLER TYPE: EPAC

DATE 07/13 PAGE NO. 3 OF 3

2

PROJECT ID:	2722-10-70
INTERSECTION:	COFFEE RD AT CALHOUN RD

SIGNAL WIRE COLOR CODING	BLK-BLACK	RED-RED	GRN-GREEN
	WHT-WHITE	BLU-BLUE	ORG-ORANGE

2

CB1 TO	JUMPER	# OF COND.	HEAD NO.	PHASE	SIGNAL INDICATION WIRE COLOR								PED BUTTON	OTHER
					RED	YELLOW	GREEN	<RED	<YELLOW>	<GREEN>	D/WALK	WALK		
SB1		12	2	6	RED	ORG	GRN							
			5	2	RED/BLK	ORG/BLK	GRN/BLK							
SB2		12	3	6	RED	ORG	GRN							
			4	6	RED/BLK	ORG/BLK	GRN/BLK							
SB3		12	12	8	RED	ORG	GRN							
			10	4+7	RED/BLK	ORG/BLK	GRN/BLK		BLK	BLU				
SB4		12	11	4+7	RED/BLK	ORG/BLK	GRN/BLK		BLK	BLU				
SB5		12	1	6	RED	ORG	GRN							
			6	2	RED/BLK	ORG/BLK	GRN/BLK							
SB6		12	7	2	RED	ORG	GRN							
			8	2	RED/BLK	ORG/BLK	GRN/BLK							
SB7		12	13	8	RED	ORG	GRN							
			9	4	RED/BLK	ORG/BLK	GRN/BLK							
SB8		12	14	8	RED	ORG	GRN							

EQUIPMENT GROUNDING CONDUCTOR 10 AWG GRN XLP	
FROM	TO
CB1	SB1
SB1	SB2
SB2	SB3
SB3	SB4
SB4	SB5
SB5	SB6
SB6	SB7
SB7	SB8
SB8	CB1

PULL BOX BONDING JUMPER 10 AWG GRN XLP	
FROM	TO
CB1	PB1
SB1	PB2
SB2	PB4
SB2	PB5
SB3	PB6
SB4	PB9
SB5	PB10
SB6	PB12
SB6	PB13
SB7	PB14
SB8	PB17

LIGHTING UF 12 AWG W/GROUND	
FROM	TO
CB1	SB2
SB2	SB4
CB1	SB8
SB8	SB6

EMERGENCY VEHICLE PREEMPTION	
FROM	TO
CB1	SB6 (HEAD 'A')
CB1	SB2 (HEAD 'B')
CB1	SB4 (HEAD 'C')
CB1	SB8 (HEAD 'D')

NOTES:

1. USE WHITE CONDUCTOR IN THE SIGNAL CABLE AS THE GROUNDED CONDUCTOR FOR ALL TRAFFIC SIGNAL INDICATIONS.
2. ENSURE THE GROUNDED CONDUCTOR IN THE FEEDER CABLE AND THE POLE CABLES ARE BOTH 18" LONGER THAN THE UNGROUNDED CONDUCTORS.
3. AT THE SIGNAL BASES, CONNECT ONE TERMINAL FROM THE PEDESTRIAN PUSH BUTTONS TO THE COLOR INDICATED IN THE CHART. CONNECT THE OTHER TERMINAL TO THE GROUNDED CONDUCTOR.

2

LEGEND

- CONTROL CABINET
- NONMETALLIC CONDUIT 2", UNLESS OTHERWISE NOTED
- LOOP DETECTOR CONDUIT 1" NONMETALLIC
- SIGNAL HEAD, TRAFFIC SIGNAL STANDARD, PEDESTAL BASE
- (XX) SIGNAL HEAD, TRAFFIC SIGNAL POLE, TRANSFORMER BASE
- PEDESTRIAN HEAD WITH PUSH BUTTON
- LUMINAIRE, TRAFFIC POLE, TRANSFORMER BASE
- LOOP DETECTOR IN 1" NONMETALLIC CONDUIT
- PULL BOX, 24" X 36"
- (B) EVP DESIGNATOR
- EVP DETECTOR HEAD
- SIGNAL HEAD NUMBER
- (R) RED CIRCULAR INDICATOR
- (Y) YELLOW CIRCULAR INDICATOR
- (G) GREEN CIRCULAR INDICATOR
- YELLOW ARROW
- GREEN ARROW
- DON'T WALK INDICATOR 12"
- WALK INDICATOR 12"

NOTE: BOLD REPRESENTS ITEMS TO BE REMOVED
GRAYSHADE REPRESENTS EXISTING TO REMAIN

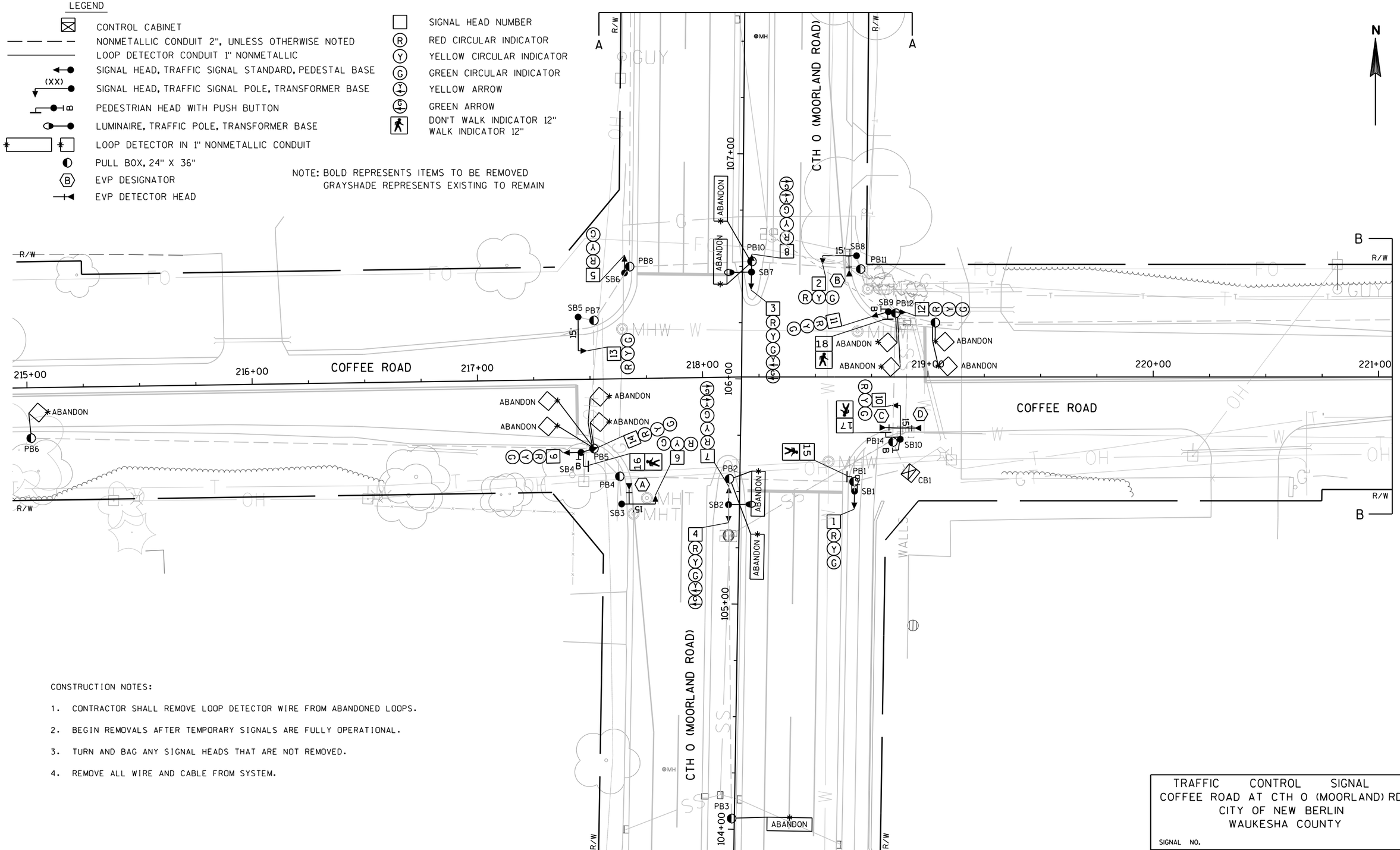

CONSTRUCTION NOTES:

1. CONTRACTOR SHALL REMOVE LOOP DETECTOR WIRE FROM ABANDONED LOOPS.
2. BEGIN REMOVALS AFTER TEMPORARY SIGNALS ARE FULLY OPERATIONAL.
3. TURN AND BAG ANY SIGNAL HEADS THAT ARE NOT REMOVED.
4. REMOVE ALL WIRE AND CABLE FROM SYSTEM.

TRAFFIC CONTROL SIGNAL
COFFEE ROAD AT CTH O (MOORLAND) RD
CITY OF NEW BERLIN
WAUKESHA COUNTY

SIGNAL NO.

DESIGNED BY: TAD, INC.
REVISED BY:

PAGE 1 OF 2

PROJECT NO: 2722-10-70	HWY: COFFEE ROAD	COUNTY: WAUKESHA	TRAFFIC SIGNAL REMOVAL PLAN	SHEET 56	E

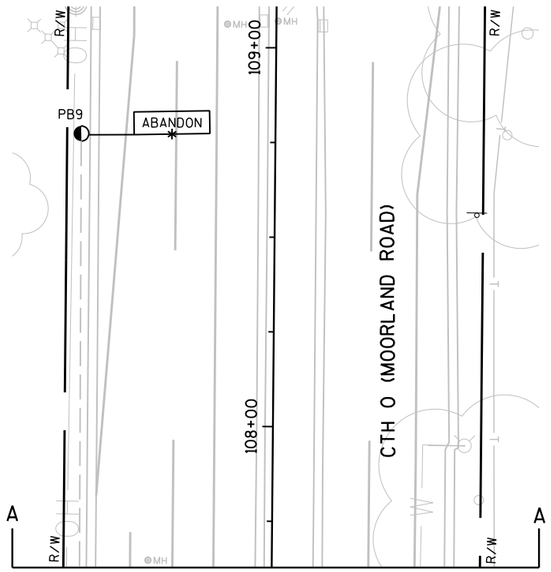

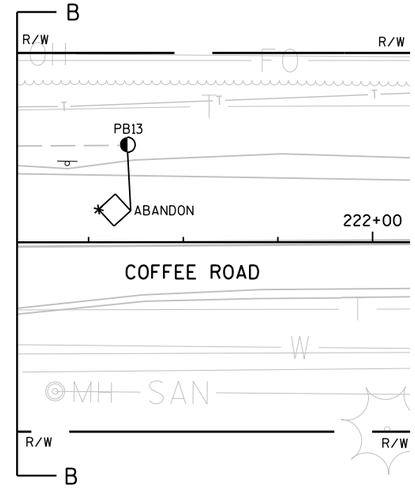

2

TRAFFIC CONTROL SIGNAL
COFFEE ROAD AT CTH O (MOORLAND) RD
CITY OF NEW BERLIN
WAUKESHA COUNTY

SIGNAL NO.

DESIGNED BY: TAD, INC.
REVISED BY:

PAGE 2 OF 2

PROJECT NO: 2722-10-70	HWY: COFFEE ROAD	COUNTY: WAUKESHA	TRAFFIC SIGNAL REMOVAL PLAN	SHEET 57	E

2

LEGEND

- WOOD POLE CLASS 4
- CABLE-OVERHEAD
- TEMPORARY SIGNAL HEAD
- TEMPORARY LUMINAIRE 250W HPS
- VX — VIDEO DETECTION CAMERA
- XX — VIDEO DETECTION AREA
- SIGNAL HEAD NUMBER
- R — RED CIRCULAR INDICATOR
- Y — YELLOW CIRCULAR INDICATOR
- G — GREEN CIRCULAR INDICATOR
- R — RED ARROW
- Y — YELLOW ARROW
- G — GREEN ARROW

NOTE: GRAYSHADE REPRESENTS EXISTING
ALL LENSES ARE 12 INCH

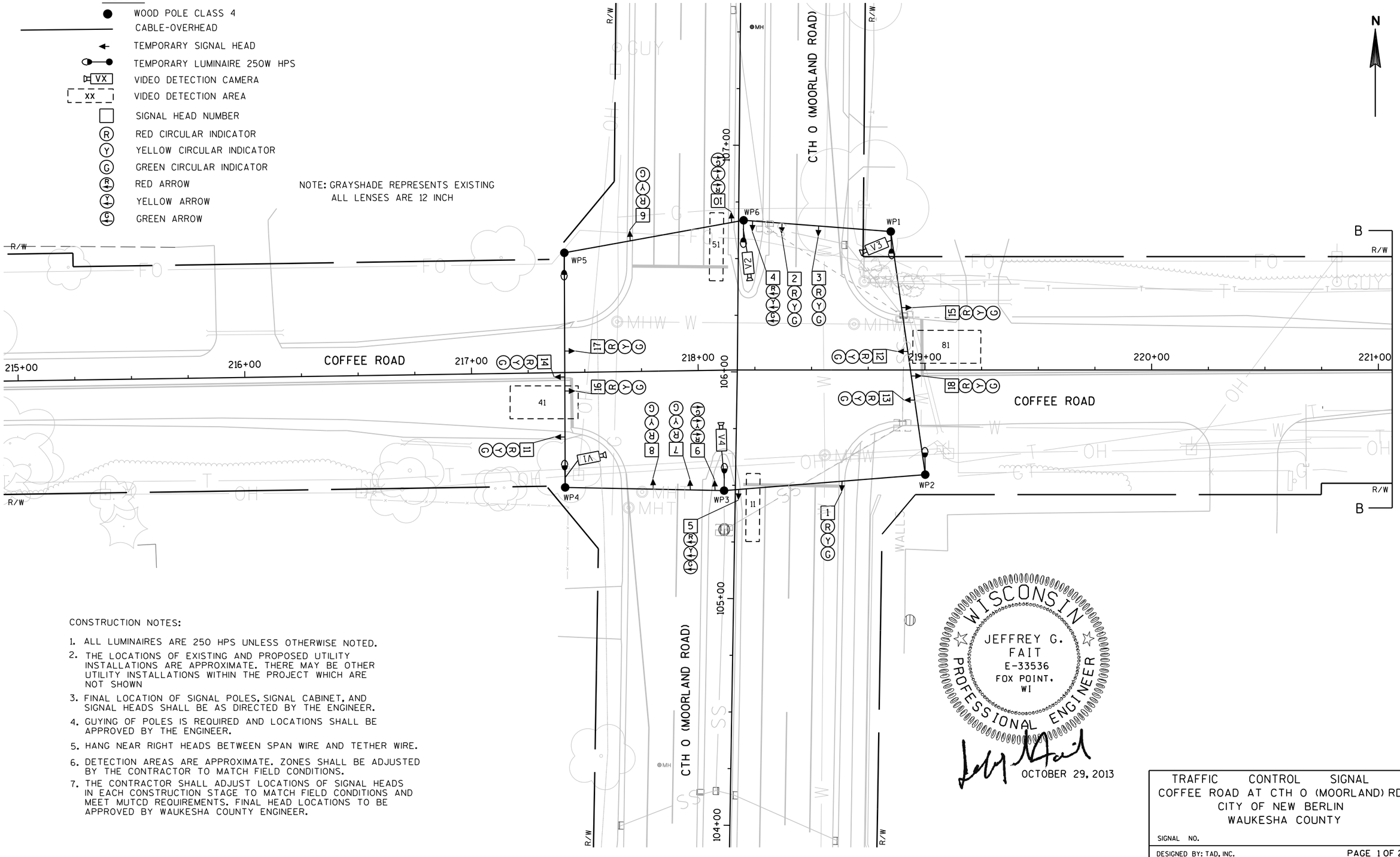

CONSTRUCTION NOTES:

1. ALL LUMINAIRES ARE 250 HPS UNLESS OTHERWISE NOTED.
2. THE LOCATIONS OF EXISTING AND PROPOSED UTILITY INSTALLATIONS ARE APPROXIMATE. THERE MAY BE OTHER UTILITY INSTALLATIONS WITHIN THE PROJECT WHICH ARE NOT SHOWN
3. FINAL LOCATION OF SIGNAL POLES, SIGNAL CABINET, AND SIGNAL HEADS SHALL BE AS DIRECTED BY THE ENGINEER.
4. GUYING OF POLES IS REQUIRED AND LOCATIONS SHALL BE APPROVED BY THE ENGINEER.
5. HANG NEAR RIGHT HEADS BETWEEN SPAN WIRE AND TETHER WIRE.
6. DETECTION AREAS ARE APPROXIMATE. ZONES SHALL BE ADJUSTED BY THE CONTRACTOR TO MATCH FIELD CONDITIONS.
7. THE CONTRACTOR SHALL ADJUST LOCATIONS OF SIGNAL HEADS IN EACH CONSTRUCTION STAGE TO MATCH FIELD CONDITIONS AND MEET MUTCD REQUIREMENTS. FINAL HEAD LOCATIONS TO BE APPROVED BY WAUKESHA COUNTY ENGINEER.

WISCONSIN
JEFFREY G. FAIT
E-33536
FOX POINT, WI
PROFESSIONAL ENGINEER

OCTOBER 29, 2013

TRAFFIC CONTROL SIGNAL
COFFEE ROAD AT CTH O (MOORLAND) RD
CITY OF NEW BERLIN
WAUKESHA COUNTY

SIGNAL NO.

DESIGNED BY: TAD, INC.
REVISED BY:

PAGE 1 OF 2

PROJECT NO: 2722-10-70	HWY: COFFEE ROAD	COUNTY: WAUKESHA	TEMPORARY TRAFFIC SIGNAL PLAN	SHEET 58	E

FILE NAME : Moorland Temporary Signal.dgn PLOT DATE : 10/29/2013 PLOT BY : JFAIT-TADI PLOT NAME : PLOT SCALE : 40.0000 sf / in.

WISDOT/CADDS SHEET 42

SEQUENCE OF OPERATION

N

NOT USED

NOT USED

RING 1

	HEAD NUMBERS	01 R/W	01 CLEAR TO **				02 R/W	02 CLEAR TO **				03 R/W	03 CLEAR TO **				04 R/W	04 CLEAR TO **				FLASH
01	4,5	G	Y	R			R	R	R								R	R	R			R
02	6,7,8	R	R	R			G	Y	R								R	R	R			R
03																						
04	11,12,13,14	R	R	R			R	R	R								G	Y	R			R
05	9,10	R	R	R			R	R	R								R	R	R			R
06	1,2,3	R	R	R			R	R	R								R	R	R			R
07																						
08	15,16,17	R	R	R			R	R	R								R	R	R			R
02P																						
04P																						
06P																						
08P																						

NOT USED

NOT USED

RING 2

	HEAD NUMBERS	05 R/W	05 CLEAR TO **				06 R/W	06 CLEAR TO **				07 R/W	07 CLEAR TO **				08 R/W	08 CLEAR TO **			
01	4,5	R	R	R			R	R	R								R	R	R		
02	6,7,8	R	R	R			R	R	R								R	R	R		
03																					
04	11,12,13,14	R	R	R			R	R	R								R	R	R		
05	9,10	G	Y	R			R	R	R								R	R	R		
06	1,2,3	R	R	R			G	Y	R								R	R	R		
07																					
08	15,16,17	R	R	R			R	R	R								G	Y	R		
02P																					
04P																					
06P																					
08P																					

BARRIER

** CLEARANCE TO A PHASE IN CONFLICT WITH THIS PHASE ON (SEE CHART 1 BELOW)

CHART 1

PHASE ON	NONCONFLICTING PHASE ALLOWED TO TIME CONCURRENTLY	PHASES IN CONFLICT WITH PHASE ON
01	5 OR 6	2,4,8
02	5 OR 6	1,4,8
03		
04	8	1,2,5,6
05	1 OR 2	4,6,8
06	1 OR 2	4,5,8
07		
08	4	1,2,5,6

DETECTOR LOGIC

DETECTOR NUMBER	DETECTOR INPUT	DETECTOR OPERATION: CALLS AND EXTENDS	CALLS ONLY	EXTENDS ONLY	PHASE CALLED	PHASE EXTENDED	DETECTOR DISCONNECT PHASE	CALLING DELAY	EXTENSION STRETCH	SIZE	NUMBER OF TURNS
11		X			1	1					VIDEO
41		X			4	4					VIDEO
51		X			5	5					VIDEO
81		X			8	8					VIDEO

CONTROLLER LOGIC

PHASE NUMBER	PHASE LOCKING	DUAL ENTRY W / Ø	PHASE RECALL	PHASE ACTIVE
1		6		X
2		6	MAX	X
3				
4		8		X
5		2		X
6		2	MAX	X
7				
8		4		X

OVERLAPS

O.L. "A" =
O.L. "B" =
O.L. "C" =
O.L. "D" =

TYPE OF INTERCONNECT	
NONE	
TBC	X
CLOSED LOOP	
HARDWIRE (7 WIRE)	
TONE (FREQ)	

TYPE OF PRE-EMPT	
NONE	X
RAILROAD	
EMERGENCY VEHICLE	

TYPE OF LIGHTING	
NONE	
IN TRAFFIC CONTROL CABINET	X
IN SEPARATE CONTROL CABINET	

GENERAL NOTES:

1. ANY ACTUATED PHASE FOR WHICH THERE IS NO CALL SHALL BE SKIPPED.
2. WHEN ONE PHASE IS ON ALONE, ANY NONCONFLICTING PHASE MAY START TIMING CONCURRENTLY WITHOUT A CLEARANCE INTERVAL. (SEE CHART 1 AT LEFT.)

COFFEE ROAD AT CTH O (MOORLAND RD)
CITY OF NEW BERLIN
WAUKESHA COUNTY

SIGNAL NO.

CONTROLLER TYPE: TEMP

DATE 07/13 PAGE NO. 2 OF 2

LEGEND

- CONTROL CABINET
- NONMETALLIC CONDUIT 2", UNLESS OTHERWISE NOTED
- SIGNAL HEAD, TRAFFIC SIGNAL STANDARD, PEDESTAL BASE
- (XX) MONOTUBE BASE, POLE, 15'-30' ARM
- (XX) MONOTUBE BASE, POLE, 35'-55' ARM
- PEDESTRIAN HEAD WITH PUSH BUTTON
- LUMINAIRE, TYPE 4 TRAFFIC SIGNAL POLE, TRANSFORMER BASE
- VIDEO DETECTION AREA
- VX VIDEO DETECTION CAMERA MOUNTED ON LUMINAIRE ARM
- PULL BOX, 24" X 42"
- (B) EVP DESIGNATOR
- EVP DETECTOR HEAD WITH LED CONFIRMATION LIGHT

- SIGNAL HEAD NUMBER
- (R) RED CIRCULAR INDICATOR
- (Y) YELLOW CIRCULAR INDICATOR
- (G) GREEN CIRCULAR INDICATOR
- (R) RED ARROW
- (FY) YELLOW ARROW
- (G) GREEN ARROW
- WALK/DON'T WALK INDICATOR 16" WITH COUNTDOWN TIMER

NOTE: ALL VEHICULAR LENSES ARE 12-INCH
GRAYSHADE REPRESENTS EXISTING

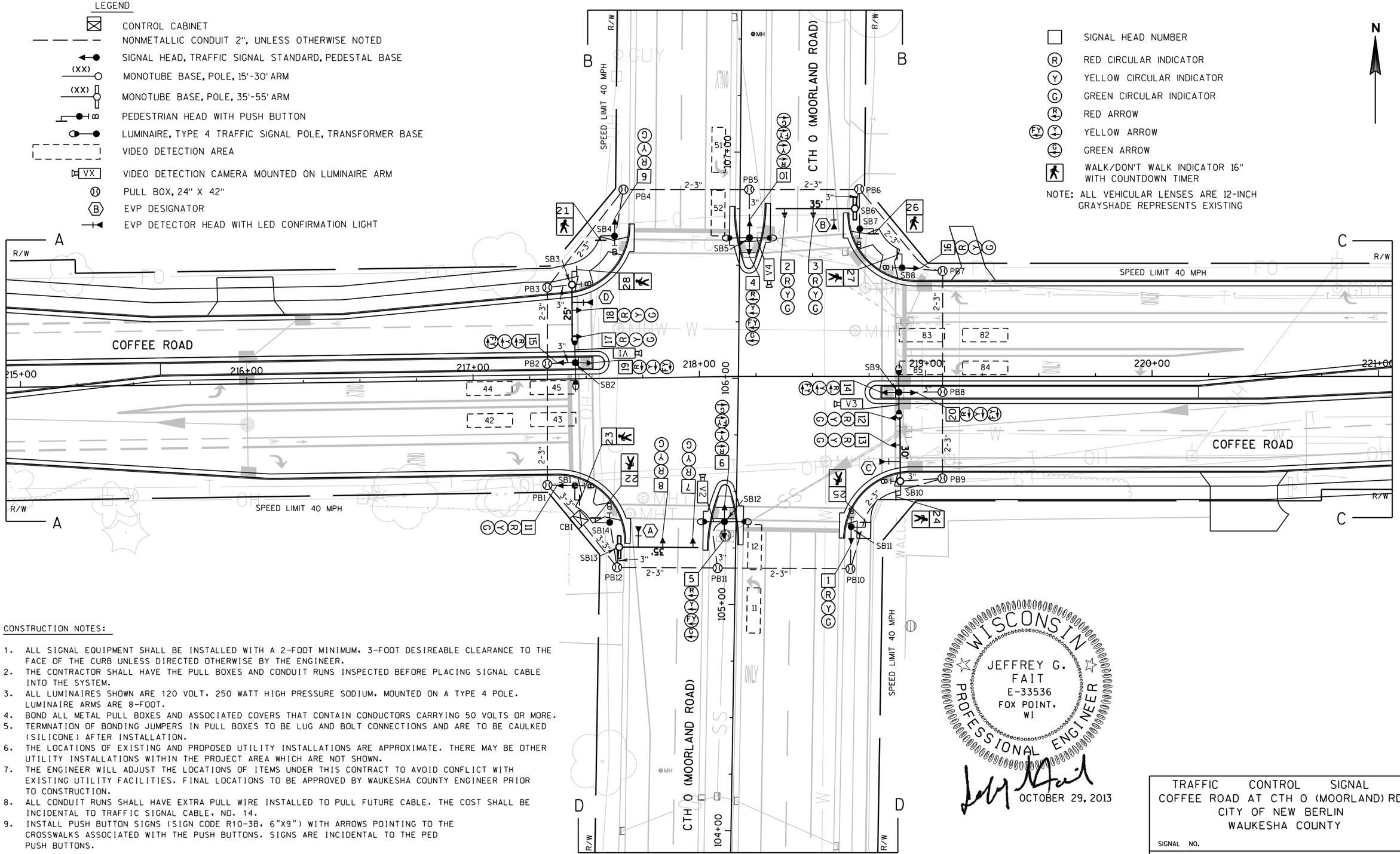

CONSTRUCTION NOTES:

1. ALL SIGNAL EQUIPMENT SHALL BE INSTALLED WITH A 2-FOOT MINIMUM, 3-FOOT DESIREABLE CLEARANCE TO THE FACE OF THE CURB UNLESS DIRECTED OTHERWISE BY THE ENGINEER.
2. THE CONTRACTOR SHALL HAVE THE PULL BOXES AND CONDUIT RUNS INSPECTED BEFORE PLACING SIGNAL CABLE INTO THE SYSTEM.
3. ALL LUMINAIRES SHOWN ARE 120 VOLT, 250 WATT HIGH PRESSURE SODIUM, MOUNTED ON A TYPE 4 POLE. LUMINAIRE ARMS ARE 8-FOOT.
4. BOND ALL METAL PULL BOXES AND ASSOCIATED COVERS THAT CONTAIN CONDUCTORS CARRYING 50 VOLTS OR MORE.
5. TERMNATION OF BONDING JUMPERS IN PULL BOXES TO BE LUG AND BOLT CONNECTIONS AND ARE TO BE CAULKED (SILICONE) AFTER INSTALLATION.
6. THE LOCATIONS OF EXISTING AND PROPOSED UTILITY INSTALLATIONS ARE APPROXIMATE. THERE MAY BE OTHER UTILITY INSTALLATIONS WITHIN THE PROJECT AREA WHICH ARE NOT SHOWN.
7. THE ENGINEER WILL ADJUST THE LOCATIONS OF ITEMS UNDER THIS CONTRACT TO AVOID CONFLICT WITH EXISTING UTILITY FACILITIES. FINAL LOCATIONS TO BE APPROVED BY WAUKESHA COUNTY ENGINEER PRIOR TO CONSTRUCTION.
8. ALL CONDUIT RUNS SHALL HAVE EXTRA PULL WIRE INSTALLED TO PULL FUTURE CABLE. THE COST SHALL BE INCIDENTAL TO TRAFFIC SIGNAL CABLE, NO. 14.
9. INSTALL PUSH BUTTON SIGNS (SIGN CODE R10-3B, 6"X9") WITH ARROWS POINTING TO THE CROSSWALKS ASSOCIATED WITH THE PUSH BUTTONS. SIGNS ARE INCIDENTAL TO THE PED PUSH BUTTONS.

WISCONSIN
JEFFREY G. FAIT
E-33536
FOX POINT, WI
PROFESSIONAL ENGINEER

OCTOBER 29, 2013

TRAFFIC CONTROL SIGNAL
COFFEE ROAD AT CTH O (MOORLAND) RD
CITY OF NEW BERLIN
WAUKESHA COUNTY

SIGNAL NO.

DESIGNED BY: TAD, INC.
REVISED BY:

PAGE 1 OF 3

PROJECT NO:2722-10-70	HWY:COFFEE ROAD	COUNTY:WAUKESHA	TRAFFIC SIGNAL PLAN	SHEET 60	E

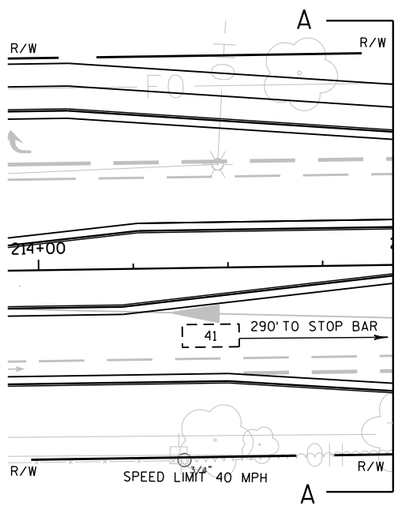

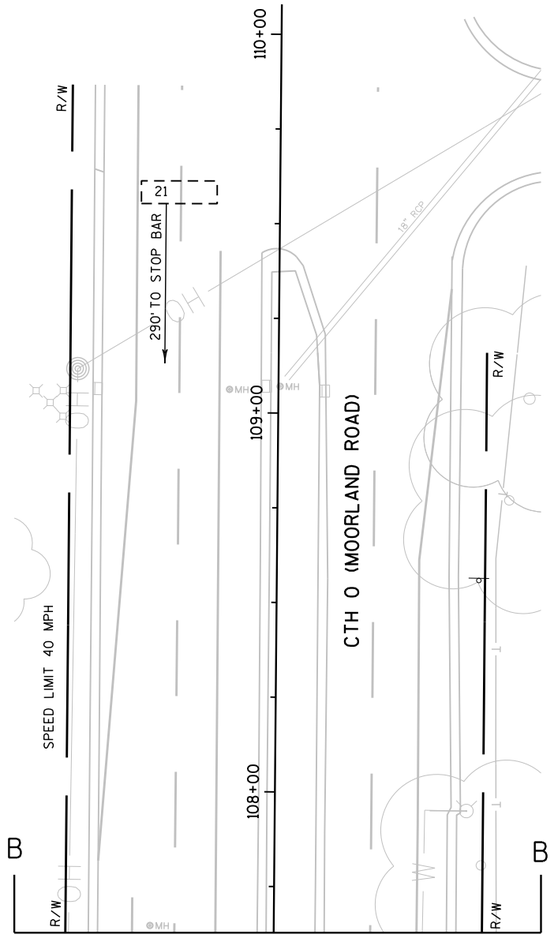

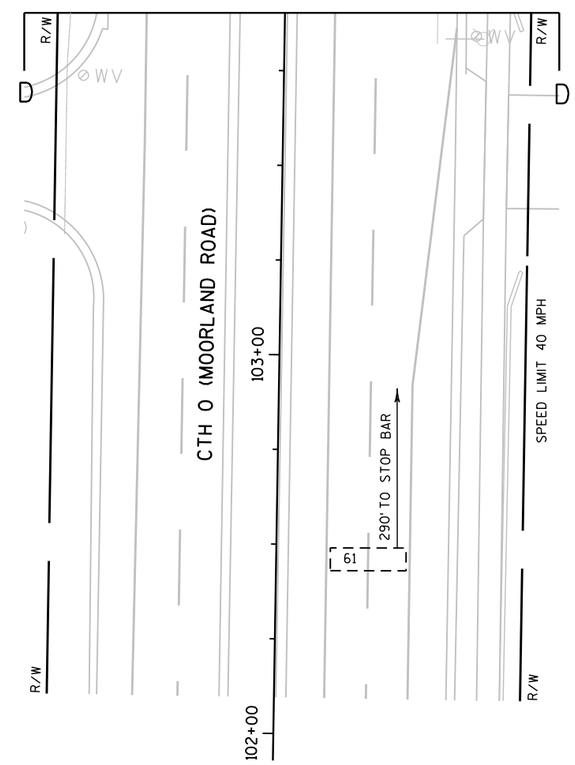

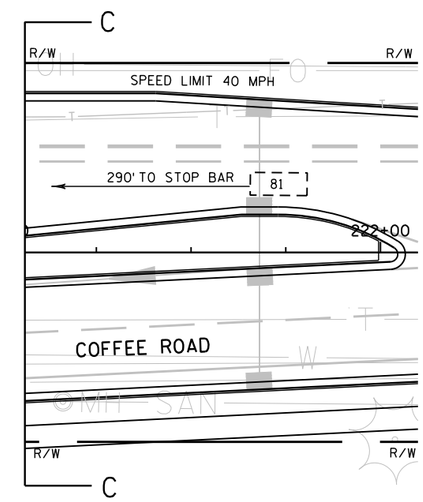

TRAFFIC CONTROL SIGNAL
COFFEE ROAD AT CTH O (MOORLAND) RD
CITY OF NEW BERLIN
WAUKESHA COUNTY

SIGNAL NO.

DESIGNED BY: TAD, INC.
REVISED BY:

PAGE 2 OF 3

PROJECT NO: 2722-10-70	HWY: COFFEE ROAD	COUNTY: WAUKESHA	TRAFFIC SIGNAL PLAN	SHEET 61	E

SEQUENCE OF OPERATION

N

			01			02			03			04			FLASH
			CLEAR TO			CLEAR TO			CLEAR TO			CLEAR TO			
	HEAD NUMBERS	R/W	**		R/W	**		R/W	**		R/W	**			
	01	4,5	G	-	-	-	-	-				-	-	-	-
	02	6,7,8	R	R	R	G	Y	R				R	R	R	R
	03														
	04	11,12,13	R	R	R	R	R	R				G	Y	R	R
RING 1	05	9,10	-	-	-	-	-	-				-	-	-	-
	06	1,2,3	R	R	R	R	R	R				R	R	R	R
	07														
	08	16,17,18	R	R	R	R	R	R				R	R	R	R
	02P	21,22	D	D	D	*	D	D				D	D	D	
	04P	23,24	D	D	D	D	D	D				*	D	D	
	06P	25,26	D	D	D	D	D	D				D	D	D	
	08P	27,28	D	D	D	D	D	D				D	D	D	
	OL'A'	4,5	-	Y	R	FY	Y	R				R	R	R	R
	OL'B'	19,20	R	R	R	R	R	R				FY	Y	R	R
	OL'C'	9,10	R	R	R	R	R	R				R	R	R	R
	OL'D'	14,15	R	R	R	R	R	R				R	R	R	R

			05			06			07			08		
			CLEAR TO			CLEAR TO			CLEAR TO			CLEAR TO		
	HEAD NUMBERS	R/W	**		R/W	**		R/W	**		R/W	**		
	01	4,5	-	-	-	-	-	-				-	-	-
	02	6,7,8	R	R	R	R	R	R				R	R	R
	03													
RING 2	04	11,12,13	R	R	R	R	R	R				R	R	R
	05	9,10	G	-	-	-	-	-				-	-	-
	06	1,2,3	R	R	R	G	Y	R				R	R	R
	07													
	08	16,17,18	R	R	R	R	R	R				G	Y	R
	02P	21,22	D	D	D	D	D	D				D	D	D
	04P	23,24	D	D	D	D	D	D				D	D	D
	06P	25,26	D	D	D	*	D	D				D	D	D
	08P	27,28	D	D	D	D	D	D				*	D	D
	OL'A'	4,5	R	R	R	R	R	R				R	R	R
	OL'B'	19,20	R	R	R	R	R	R				R	R	R
	OL'C'	9,10	-	Y	R	FY	Y	R				R	R	R
	OL'D'	14,15	R	R	R	R	R	R				FY	Y	R

FY = FLASHING YELLOW ARROW

BARRIER

** CLEARANCE TO A PHASE IN CONFLICT WITH THIS PHASE ON (SEE CHART 1)

* WHEN CALLED, TIMED STEADY WALK, THEN FLASHING DON'T WALK, THEN GOES TO STEADY DON'T WALK

DETECTOR LOGIC

DETECTOR NUMBER	DETECTOR INPUT	DETECTOR OPERATION: CALLS AND EXTENDS	CALLS ONLY	EXTENDS ONLY	PHASE CALLED	PHASE EXTENDED	DETECTOR DISCONNECT PHASE	CALLING DELAY	EXTENSION STRETCH	SIZE	NUMBER OF TURNS
11		X			1	1					VIDEO
12		X			1	1					VIDEO
21		X			2	2					VIDEO
41				X		4			X		VIDEO
42		X			4	4					VIDEO
43		X			4	4					VIDEO
44		X			4	4					VIDEO
45		X			4	4					VIDEO
51		X			5	5					VIDEO
52		X			5	5					VIDEO
61		X			6	6					VIDEO
81				X		8			X		VIDEO
82		X			8	8					VIDEO
83		X			8	8					VIDEO
84		X			8	8					VIDEO
85		X			8	8					VIDEO

CONTROLLER LOGIC

PHASE NUMBER	PHASE LOCKING	DUAL ENTRY W / Ø	PHASE RECALL	PHASE ACTIVE
1		6		X
2	X	6	MIN.	X
3				
4		8		X
5		2		X
6	X	2	MIN.	X
7				
8		4		X

OVERLAPS

O.L. "A" =
O.L. "B" =
O.L. "C" =
O.L. "D" =

SPECIAL OVERLAPS

	PROTECTIVE	PERMISSIVE
O.L. "A" =	1	2
O.L. "B" =	-	4
O.L. "C" =	5	6
O.L. "D" =	-	8

TYPE OF INTERCONNECT COMMUNICATION	
NONE	
TBC	
CLOSED LOOP TWISTED PAIR*	
CLOSED LOOP FIBER OPTIC*	
RADIO	X
*LOCATION OF MASTER CONTROLLER NO: S-	
SIGNAL SYSTEM #: SS- -	

TYPE OF PRE-EMPT	
NONE	
RAILROAD	
EMERGENCY VEHICLE	
OPTICOM	X
TOMAR	
HARDWIRE	
OTHER	
LIFT BRIDGE	
QUEUE DETECTOR	

TYPE OF LIGHTING	
BY OTHER AGENCY	
IN TRAFFIC SIGNAL CABINET	X
IN SEPARATE DOT LIGHTING CABINET	

EMERGENCY VEHICLE PREEMPTION SEQUENCE

EMERGENCY VEHICLE DETECTOR	A	B	C	D
MOVEMENT				
PHASE	2+5	6+1	4	8

TERMINATE EACH PREEMPTION SEQUENCE WITH AN ALL-RED INTERVAL
AFTER PREEMPTION SEQUENCE 2 OR 6, CONTROLLER SHALL RETURN TO PHASES 2+6.
AFTER PREEMPTION SEQUENCE 4+7 OR 8, CONTROLLER SHALL RETURN TO PHASES 4+8.

CHART 1

PHASE ON	NONCONFLICTING PHASE ALLOWED TO TIME CONCURRENTLY	PHASES IN CONFLICT WITH PHASE ON
1	5 OR 6	2,4,8
2	5 OR 6	1,4,8
3		
4	8	1,2,5,6
5	1 OR 2	4,6,8
6	1 OR 2	4,5,8
7		
8	4	1,2,5,6

GENERAL NOTES:

1. ANY ACTUATED PHASE FOR WHICH THERE IS NO CALL SHALL BE SKIPPED.
2. WHEN ONE PHASE IS ON ALONE, ANY NONCONFLICTING PHASE MAY START TIMING CONCURRENTLY WITHOUT A CLEARANCE INTERVAL. (SEE CHART 1 AT LEFT.)
3. IF ANY OPPOSING THRU PHASES ARE TIMING CONCURRENTLY, THEY SHALL TERMINATE TOGETHER DUE TO PERMISSIVE LEFT TURN CONFLICT.

COFFEE ROAD AT CTH O (MOORLAND RD)
CITY OF NEW BERLIN
WAUKESHA COUNTY

SIGNAL NO.

CONTROLLER TYPE: EPAC

DATE 07/13

PAGE NO. 3 OF 3

2

PROJECT ID:	2722-10-70
INTERSECTION:	COFFEE RD AT CTH O (MOORLAND RD)

SIGNAL WIRE COLOR CODING	BLK-BLACK	RED-RED	GRN-GREEN
	WHT-WHITE	BLU-BLUE	ORG-ORANGE

CB1 TO	JUMPER	# OF COND.	HEAD NO.	PHASE	SIGNAL INDICATION WIRE COLOR									PED BUTTON	OTHER
					RED	YELLOW	GREEN	<RED>	<YELLOW>	<FL YELLOW>	<GREEN>	D/WALK	WALK		
SB1		12	11	4	RED	ORG	GRN								
			23	4								BLK	BLU		
			B	2										WHT/BLK	
SB2		12	15	OL D				RED	ORG	BLK					
			19	OL B				RED/BLK	ORG/BLK	BLU					
SB3		12	17	8	RED	ORG	GRN								
			18	8	RED	ORG	GRN								
			28	8								BLK	BLU		
			B	2										WHT/BLK	
SB4		12	6	2	RED	ORG	GRN								
			21	2								BLK	BLU		
			B	8										WHT/BLK	
SB5		12	4	1+OL A				RED	ORG	BLK	GRN				
			10	5+OLC				RED/BLK	ORG/BLK	BLU	GRN/BLK				
SB6		12	2	6	RED	ORG	GRN								
			3	6	RED	ORG	GRN								
SB7		12	26	6								BLK	BLU		
			B	8										WHT/BLK	
SB8		12	16	8	RED	ORG	GRN								
			27	8								BLK	BLU		
			B	6										WHT/BLK	
SB9		12	14	OL D				RED	ORG	BLK					
			20	OL B				RED/BLK	ORG/BLK	BLU					
SB10		12	12	4	RED	ORG	GRN								
			13	4	RED	ORG	GRN								
			24	4								BLK	BLU		
			B	6										WHT/BLK	
SB11		12	1	6	RED	ORG	GRN								
			25	6								BLK	BLU		
			B	4										WHT/BLK	
SB12		12	5	1+OL A				RED	ORG	BLK	GRN				
			9	5+OLC				RED/BLK	ORG/BLK	BLU	GRN/BLK				
SB13		12	7	2	RED	ORG	GRN								
			8	2	RED	ORG	GRN								
SB14		12	22	2								BLK	BLU		
			B	4										WHT/BLK	

EQUIPMENT GROUNDING CONDUCTOR 10 AWG GRN XLP	
FROM	TO
CB1	SB1
SB1	SB2
SB2	SB3
SB3	SB4
SB4	SB5
SB5	SB6
SB6	SB7
SB7	SB8
SB8	SB9
SB9	SB10
SB10	SB11
SB11	SB12
SB12	SB13
SB13	SB14
SB14	CB1

PULL BOX BONDING JUMPER 10 AWG GRN XLP	
FROM	TO
CB1	PB1
SB2	PB2
SB3	PB3
SB4	PB4
SB5	PB5
SB6	PB6
SB8	PB7
SB9	PB8
SB10	PB9
SB11	PB10
SB12	PB11
CB1	PB12

LIGHTING UF 12 AWG W/GROUND	
FROM	TO
CB1	SB2
SB2	SB5
CB1	SB12
SB12	SB9

EMERGENCY VEHICLE PREEMPTION	
FROM	TO
CB1	SB13 (HEAD 'A')
CB1	SB6 (HEAD 'B')
CB1	SB10 (HEAD 'C')
CB1	SB3 (HEAD 'D')

VIDEO VEHICLE DETECTOR CABLE	
FROM	TO
CB1	SB2
CB1	SB5
CB1	SB9
CB1	SB12

NOTES:
1. USE WHITE CONDUCTOR IN THE SIGNAL CABLE AS THE GROUNDED CONDUCTOR FOR ALL TRAFFIC SIGNAL INDICATIONS.
2. ENSURE THE GROUNDED CONDUCTOR IN THE FEEDER CABLE AND THE POLE CABLES ARE BOTH 18" LONGER THAN THE UNGROUNDED CONDUCTORS.
3. AT THE SIGNAL BASES, CONNECT ONE TERMINAL FROM THE PEDESTRIAN PUSH BUTTONS TO THE COLOR INDICATED IN THE CHART. CONNECT THE OTHER TERMINAL TO THE GROUNDED CONDUCTOR.

LEGEND

- CONTROL CABINET
- NONMETALLIC CONDUIT 2", UNLESS OTHERWISE NOTED
- LOOP DETECTOR CONDUIT 1" NONMETALLIC
- SIGNAL HEAD, TRAFFIC SIGNAL STANDARD, PEDESTAL BASE
- (XX) SIGNAL HEAD, TRAFFIC SIGNAL POLE, TRANSFORMER BASE
- PEDESTRIAN HEAD WITH PUSH BUTTON
- LUMINAIRE, TRAFFIC POLE, TRANSFORMER BASE
- LOOP DETECTOR IN 1" NONMETALLIC CONDUIT
- PULL BOX, 24" X 36"
- PULL BOX, 18" X 24"
- SIGNAL HEAD NUMBER
- (R) RED CIRCULAR INDICATOR
- (Y) YELLOW CIRCULAR INDICATOR
- (G) GREEN CIRCULAR INDICATOR
- YELLOW ARROW
- GREEN ARROW
- DON'T WALK INDICATOR 12" / WALK INDICATOR 12"

NOTE: BOLD REPRESENTS ITEMS TO BE REMOVED
GRAYSHADE REPRESENTS EXISTING TO REMAIN

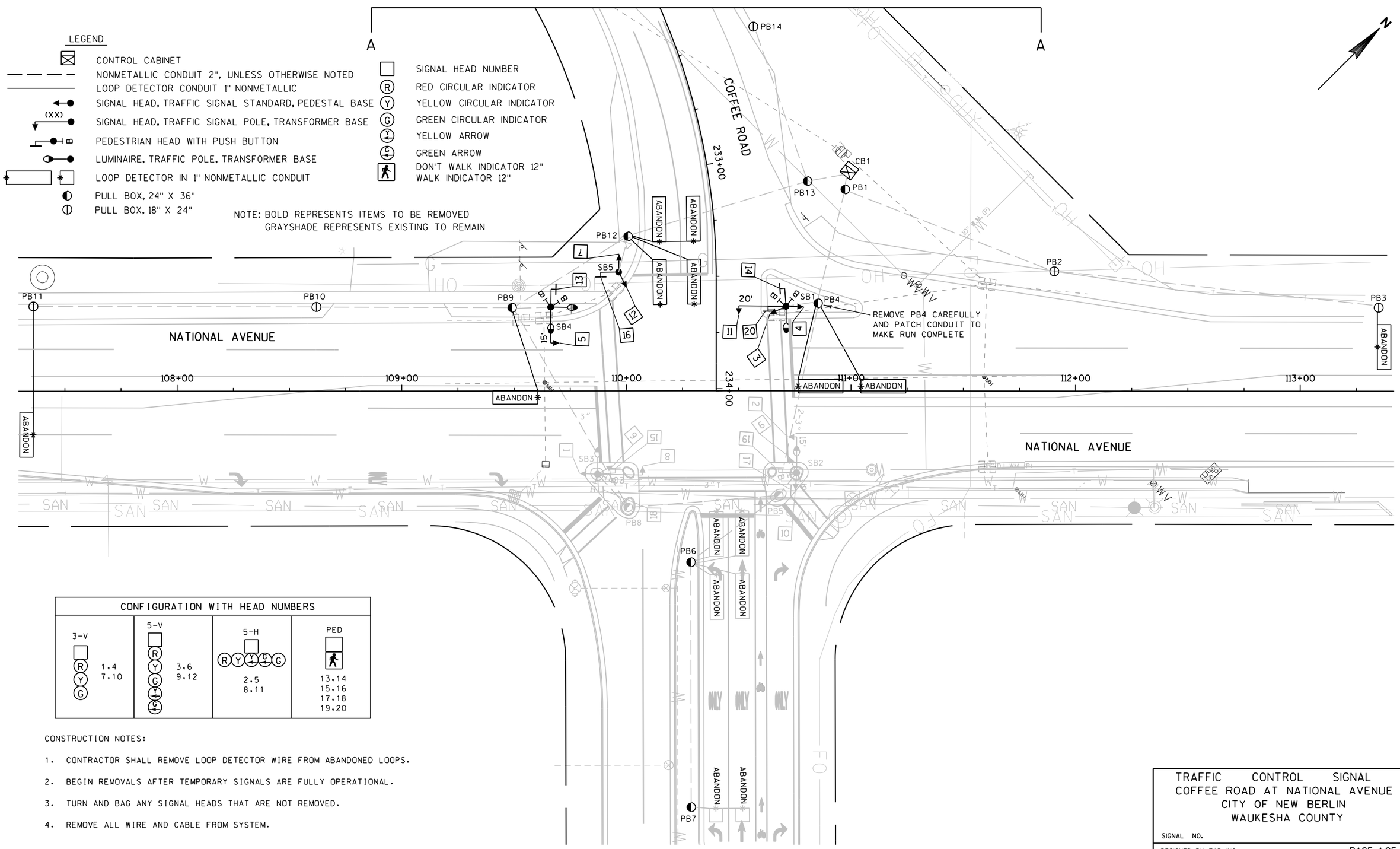

CONFIGURATION WITH HEAD NUMBERS			
3-V R Y G 1,4 7,10	5-V R Y G Y G 3,6 9,12	5-H R Y Y G G 2,5 8,11	PED 13,14 15,16 17,18 19,20

CONSTRUCTION NOTES:

1. CONTRACTOR SHALL REMOVE LOOP DETECTOR WIRE FROM ABANDONED LOOPS.
2. BEGIN REMOVALS AFTER TEMPORARY SIGNALS ARE FULLY OPERATIONAL.
3. TURN AND BAG ANY SIGNAL HEADS THAT ARE NOT REMOVED.
4. REMOVE ALL WIRE AND CABLE FROM SYSTEM.

TRAFFIC CONTROL SIGNAL
COFFEE ROAD AT NATIONAL AVENUE
CITY OF NEW BERLIN
WAUKESHA COUNTY

SIGNAL NO.

DESIGNED BY: TAD, INC.
REVISED BY:

PAGE 1 OF 2

PROJECT NO:2722-10-70	HWY:COFFEE ROAD	COUNTY:WAUKESHA	TRAFFIC SIGNAL REMOVAL PLAN	SHEET 64	E

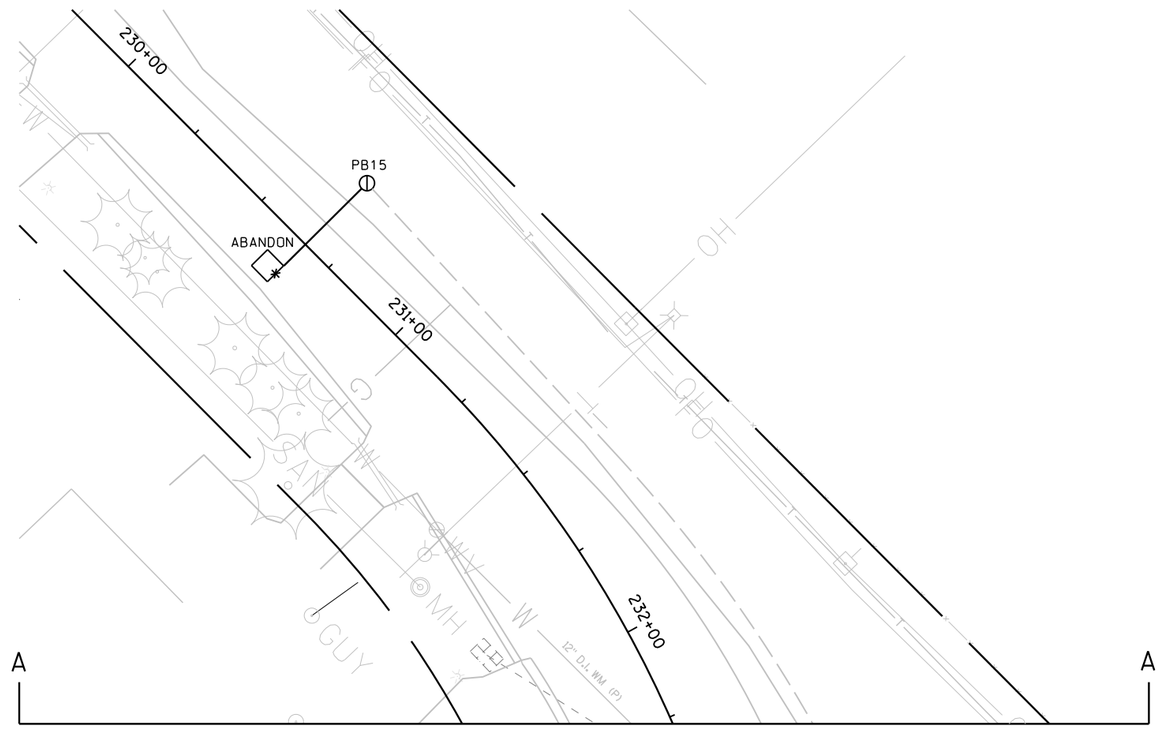

TRAFFIC CONTROL SIGNAL
COFFEE ROAD AT NATIONAL AVENUE
CITY OF NEW BERLIN
WAUKESHA COUNTY

SIGNAL NO.

DESIGNED BY: TAD, INC.
REVISED BY:

PAGE 2 OF 2

PROJECT NO:2722-10-70	HWY:COFFEE ROAD	COUNTY:WAUKESHA	TRAFFIC SIGNAL REMOVAL PLAN	SHEET 65	E

LEGEND

- WOOD POLE CLASS 4
- CABLE-OVERHEAD
- TEMPORARY SIGNAL HEAD
- TEMPORARY LUMINAIRE 250W HPS
- VX — VIDEO DETECTION CAMERA
- XX — VIDEO DETECTION AREA
- SIGNAL HEAD NUMBER
- R — RED CIRCULAR INDICATOR
- Y — YELLOW CIRCULAR INDICATOR
- G — GREEN CIRCULAR INDICATOR
- R — RED ARROW
- Y — YELLOW ARROW
- G — GREEN ARROW

NOTE: GRAYSHADE REPRESENTS EXISTING
ALL LENSES ARE 12 INCH

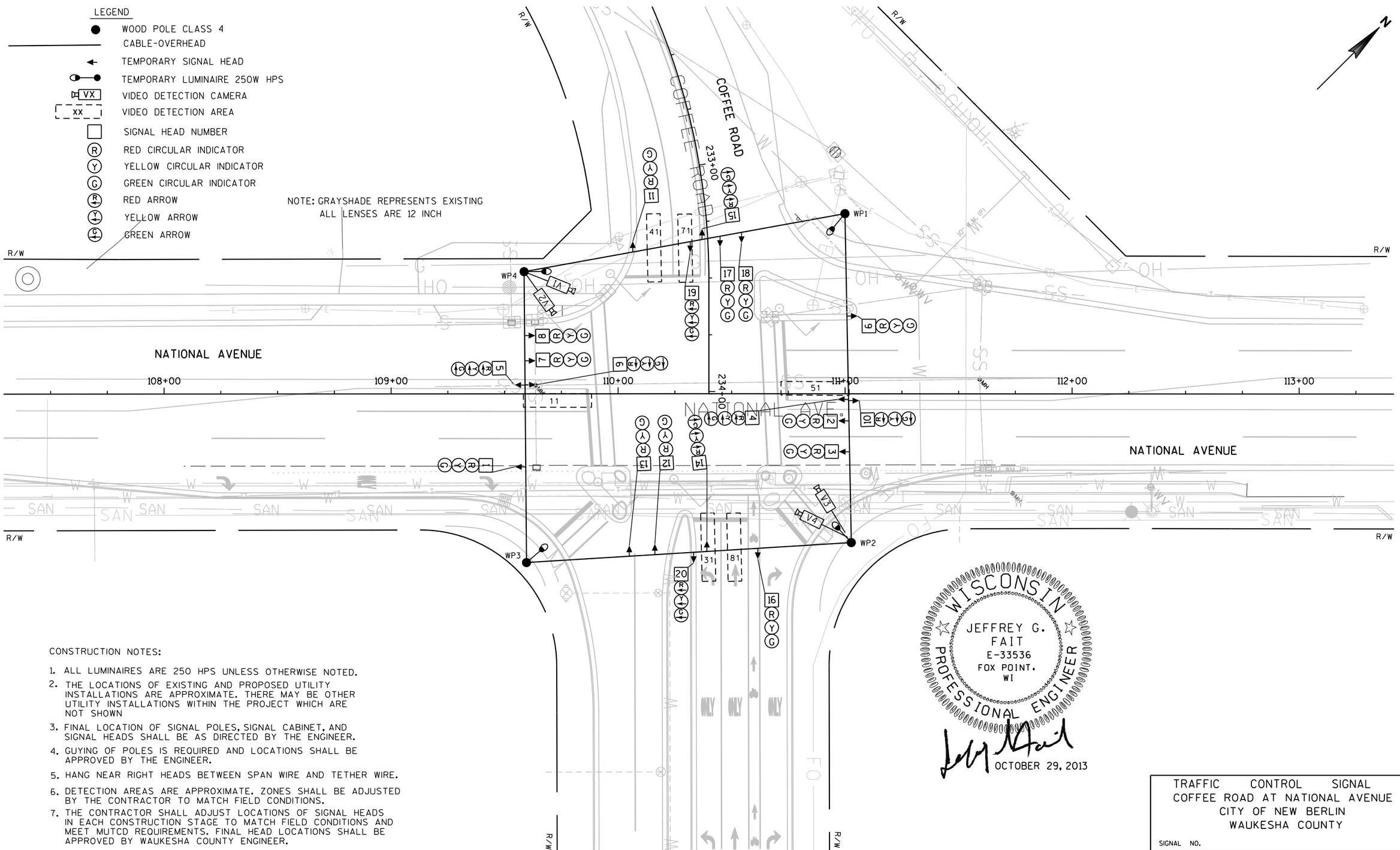

CONSTRUCTION NOTES:

1. ALL LUMINAIRES ARE 250 HPS UNLESS OTHERWISE NOTED.
2. THE LOCATIONS OF EXISTING AND PROPOSED UTILITY INSTALLATIONS ARE APPROXIMATE. THERE MAY BE OTHER UTILITY INSTALLATIONS WITHIN THE PROJECT WHICH ARE NOT SHOWN
3. FINAL LOCATION OF SIGNAL POLES, SIGNAL CABINET, AND SIGNAL HEADS SHALL BE AS DIRECTED BY THE ENGINEER.
4. GUYING OF POLES IS REQUIRED AND LOCATIONS SHALL BE APPROVED BY THE ENGINEER.
5. HANG NEAR RIGHT HEADS BETWEEN SPAN WIRE AND TETHER WIRE.
6. DETECTION AREAS ARE APPROXIMATE. ZONES SHALL BE ADJUSTED BY THE CONTRACTOR TO MATCH FIELD CONDITIONS.
7. THE CONTRACTOR SHALL ADJUST LOCATIONS OF SIGNAL HEADS IN EACH CONSTRUCTION STAGE TO MATCH FIELD CONDITIONS AND MEET MUTCD REQUIREMENTS. FINAL HEAD LOCATIONS SHALL BE APPROVED BY WAUKESHA COUNTY ENGINEER.

WISCONSIN
JEFFREY G. FAIT
E-33536
FOX POINT, WI
PROFESSIONAL ENGINEER

OCTOBER 29, 2013

TRAFFIC CONTROL SIGNAL
COFFEE ROAD AT NATIONAL AVENUE
CITY OF NEW BERLIN
WAUKESHA COUNTY

SIGNAL NO.

DESIGNED BY: TAD, INC.
REVISED BY:

PAGE 1 OF 2

PROJECT NO: 2722-10-70	HWY: COFFEE ROAD	COUNTY: WAUKESHA	TEMPORARY TRAFFIC SIGNAL PLAN	SHEET 66	E

SEQUENCE OF OPERATION

N

RING 1	HEAD NUMBERS	01 R/W	01 CLEAR TO **				02 R/W	02 CLEAR TO **				03 R/W	03 CLEAR TO **				04 R/W	04 CLEAR TO **				FLASH
01	4,5	G	Y	R			R	R	R			R	R	R			R	R	R			R
02	6,7,8	R	R	R			G	Y	R			R	R	R			R	R	R			R
03	19,20	R	R	R			R	R	R			G	Y	R			R	R	R			R
04	11,12,13	R	R	R			R	R	R			R	R	R			G	Y	R			R
05	9,10	R	R	R			R	R	R			R	R	R			R	R	R			R
06	1,2,3	R	R	R			R	R	R			R	R	R			R	R	R			R
07	14,15	R	R	R			R	R	R			R	R	R			R	R	R			R
08	16,17,18	R	R	R			R	R	R			R	R	R			R	R	R			R
02P																						
04P																						
06P																						
08P																						

RING 2	HEAD NUMBERS	05 R/W	05 CLEAR TO **				06 R/W	06 CLEAR TO **				07 R/W	07 CLEAR TO **				08 R/W	08 CLEAR TO **			
01	4,5	R	R	R			R	R	R			R	R	R			R	R	R		
02	6,7,8	R	R	R			R	R	R			R	R	R			R	R	R		
03	19,20	R	R	R			R	R	R			R	R	R			R	R	R		
04	11,12,13	R	R	R			R	R	R			R	R	R			R	R	R		
05	9,10	G	Y	R			R	R	R			R	R	R			R	R	R		
06	1,2,3	R	R	R			G	Y	R			R	R	R			R	R	R		
07	14,15	R	R	R			R	R	R			G	Y	R			R	R	R		
08	16,17,18	R	R	R			R	R	R			R	R	R			G	Y	R		
02P																					
04P																					
06P																					
08P																					

BARRIER

** CLEARANCE TO A PHASE IN CONFLICT WITH THIS PHASE ON (SEE CHART 1 BELOW)

CHART 1

PHASE ON	NONCONFLICTING PHASE ALLOWED TO TIME CONCURRENTLY	PHASES IN CONFLICT WITH PHASE ON
1	5 OR 6	2,3,4,7,8
2	5 OR 6	1,3,4,7,8
3	7 OR 8	1,2,4,5,6
4	7 OR 8	1,2,3,5,6
5	1 OR 2	3,4,6,7,8
6	1 OR 2	3,4,5,7,8
7	3 OR 4	1,2,5,6,8
8	3 OR 4	1,2,5,7,8

DETECTOR LOGIC

DETECTOR NUMBER	DETECTOR INPUT	DETECTOR OPERATION: CALLS AND EXTENDS	CALLS ONLY	EXTENDS ONLY	PHASE CALLED	PHASE EXTENDED	DETECTOR DISCONNECT PHASE	CALLING DELAY	EXTENSION STRETCH	SIZE	NUMBER OF TURNS
11		X			1	1					VIDEO
31		X			3	3					VIDEO
41		X			4	4					VIDEO
51		X			5	5					VIDEO
71		X			7	7					VIDEO
81		X			8	8					VIDEO

CONTROLLER LOGIC

PHASE NUMBER	PHASE LOCKING	DUAL ENTRY W / Ø	PHASE RECALL	PHASE ACTIVE
1		6		X
2		6	MAX	X
3		8		X
4		8		X
5		2		X
6		2	MAX	X
7		4		X
8		4		X

OVERLAPS

O.L. "A" =
O.L. "B" =
O.L. "C" =
O.L. "D" =

TYPE OF INTERCONNECT	
NONE	
TBC	X
CLOSED LOOP	
HARDWIRE (7 WIRE)	
TONE (FREQ)	

TYPE OF PRE-EMPT	
NONE	X
RAILROAD	
EMERGENCY VEHICLE	

TYPE OF LIGHTING	
NONE	
IN TRAFFIC CONTROL CABINET	X
IN SEPARATE CONTROL CABINET	

GENERAL NOTES:

1. ANY ACTUATED PHASE FOR WHICH THERE IS NO CALL SHALL BE SKIPPED.
2. WHEN ONE PHASE IS ON ALONE, ANY NONCONFLICTING PHASE MAY START TIMING CONCURRENTLY WITHOUT A CLEARANCE INTERVAL. (SEE CHART 1 AT LEFT.)

COFFEE ROAD AT NATIONAL AVENUE
CITY OF NEW BERLIN
WAUKESHA COUNTY

SIGNAL NO.

CONTROLLER TYPE: TEMP

DATE 07/13 PAGE NO. 2 OF 2

LEGEND

- CONTROL CABINET
- NONMETALLIC CONDUIT 2", UNLESS OTHERWISE NOTED
- LOOP DETECTOR CONDUIT 1" NONMETALLIC
- SIGNAL HEAD, TRAFFIC SIGNAL STANDARD, PEDESTAL BASE
- (XX) SIGNAL HEAD, TRAFFIC SIGNAL POLE, TRANSFORMER BASE
- PEDESTRIAN HEAD WITH PUSH BUTTON
- LUMINAIRE, TRAFFIC POLE, TRANSFORMER BASE
- PULL BOX, 24" X 36"
- PULL BOX, 18" X 24"
- VIDEO DETECTION AREA
- VX VIDEO DETECTION CAMERA MOUNTED ON LUMINAIRE ARM
- PULL BOX, 24" X 42"
- B EVP DESIGNATOR
- EVP DETECTOR HEAD WITH LED CONFIRMATION LIGHT

- SIGNAL HEAD NUMBER
- R RED CIRCULAR INDICATOR
- Y YELLOW CIRCULAR INDICATOR
- G GREEN CIRCULAR INDICATOR
- Y YELLOW ARROW
- G GREEN ARROW
- WALK/DON'T WALK INDICATOR 16" WITH COUNTDOWN TIMER

NOTE: ALL VEHICULAR LENSES ARE 12-INCH
GRAYSHADE REPRESENTS EXISTING

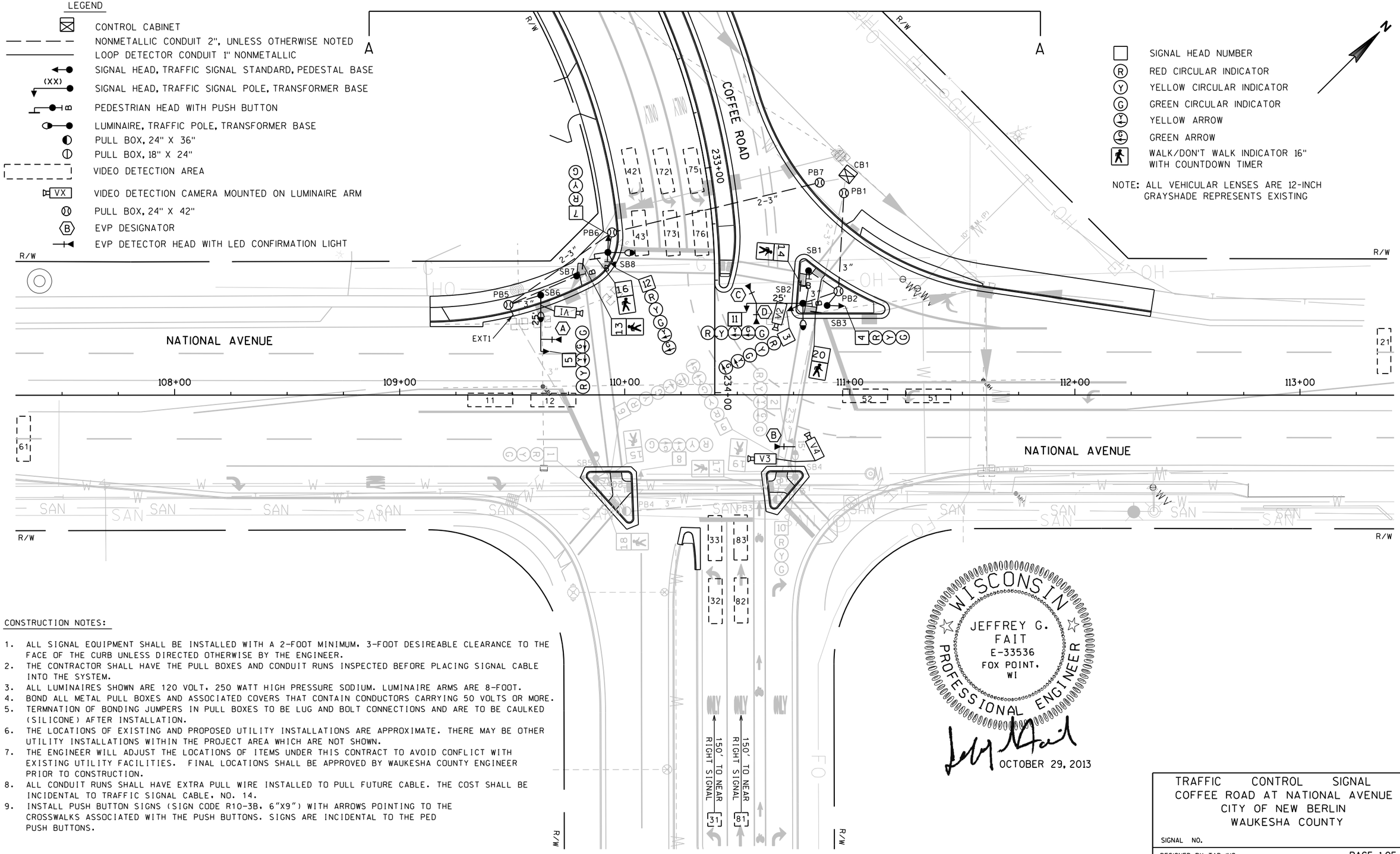

CONSTRUCTION NOTES:

1. ALL SIGNAL EQUIPMENT SHALL BE INSTALLED WITH A 2-FOOT MINIMUM, 3-FOOT DESIREABLE CLEARANCE TO THE FACE OF THE CURB UNLESS DIRECTED OTHERWISE BY THE ENGINEER.
2. THE CONTRACTOR SHALL HAVE THE PULL BOXES AND CONDUIT RUNS INSPECTED BEFORE PLACING SIGNAL CABLE INTO THE SYSTEM.
3. ALL LUMINAIRES SHOWN ARE 120 VOLT, 250 WATT HIGH PRESSURE SODIUM. LUMINAIRE ARMS ARE 8-FOOT.
4. BOND ALL METAL PULL BOXES AND ASSOCIATED COVERS THAT CONTAIN CONDUCTORS CARRYING 50 VOLTS OR MORE.
5. TERMNATION OF BONDING JUMPERS IN PULL BOXES TO BE LUG AND BOLT CONNECTIONS AND ARE TO BE CAULKED (SILICONE) AFTER INSTALLATION.
6. THE LOCATIONS OF EXISTING AND PROPOSED UTILITY INSTALLATIONS ARE APPROXIMATE. THERE MAY BE OTHER UTILITY INSTALLATIONS WITHIN THE PROJECT AREA WHICH ARE NOT SHOWN.
7. THE ENGINEER WILL ADJUST THE LOCATIONS OF ITEMS UNDER THIS CONTRACT TO AVOID CONFLICT WITH EXISTING UTILITY FACILITIES. FINAL LOCATIONS SHALL BE APPROVED BY WAUKESHA COUNTY ENGINEER PRIOR TO CONSTRUCTION.
8. ALL CONDUIT RUNS SHALL HAVE EXTRA PULL WIRE INSTALLED TO PULL FUTURE CABLE. THE COST SHALL BE INCIDENTAL TO TRAFFIC SIGNAL CABLE, NO. 14.
9. INSTALL PUSH BUTTON SIGNS (SIGN CODE R10-3B, 6"X9") WITH ARROWS POINTING TO THE CROSSWALKS ASSOCIATED WITH THE PUSH BUTTONS. SIGNS ARE INCIDENTAL TO THE PED PUSH BUTTONS.

WISCONSIN
JEFFREY G. FAIT
E-33536
FOX POINT, WI
PROFESSIONAL ENGINEER

OCTOBER 29, 2013

TRAFFIC CONTROL SIGNAL
COFFEE ROAD AT NATIONAL AVENUE
CITY OF NEW BERLIN
WAUKESHA COUNTY

SIGNAL NO.

DESIGNED BY: TAD, INC.
REVISED BY:

PAGE 1 OF 3

PROJECT NO:2722-10-70	HWY:COFFEE ROAD	COUNTY:WAUKESHA	TRAFFIC SIGNAL PLAN	SHEET 68	E

TRAFFIC CONTROL SIGNAL
COFFEE ROAD AT NATIONAL AVENUE
CITY OF NEW BERLIN
WAUKESHA COUNTY

SIGNAL NO.

DESIGNED BY: TAD, INC.
REVISED BY:

PAGE 2 OF 3

PROJECT NO:2722-10-70	HWY:COFFEE ROAD	COUNTY:WAUKESHA	TRAFFIC SIGNAL PLAN	SHEET 69	E

SEQUENCE OF OPERATION

RING 1

	HEAD NUMBERS	01 R/W	01 CLEAR TO **	02 R/W	02 CLEAR TO **	03 R/W	03 CLEAR TO **	04 R/W	04 CLEAR TO **	FLASH
01	2,3	G	Y -	-	- -	-	- -	-	- -	-
02	4,5,6	R	R R	G	Y R	R	R R	R	R R	R
03	11,12	-	- -	-	- -	G	Y -	-	- -	-
04	7,8,9	R	R R	R	R R	R	R R	G	Y R	R
05	5,6	-	- -	-	- -	-	- -	-	- -	-
06	1,2,3	R	R R	R	R R	R	R R	R	R R	R
07	8,9	-	- -	-	- -	-	- -	-	- -	-
08	10,11,12	R	R R	R	R R	R	R R	R	R R	R
02P	13,14	D	D D	*	D D	D	D D	D	D D	
04P	15,16	D	D D	D	D D	D	D D	*	D D	
06P	17,18	D	D D	D	D D	D	D D	D	D D	
08P	19,20	D	D D	D	D D	D	D D	D	D D	
OL'A'										
OL'B'										
OL'C'										
OL'D'										

RING 2

	HEAD NUMBERS	05 R/W	05 CLEAR TO **	06 R/W	06 CLEAR TO **	07 R/W	07 CLEAR TO **	08 R/W	08 CLEAR TO **
01	2,3	-	- -	-	- -	-	- -	-	- -
02	4,5,6	R	R R	R	R R	R	R R	R	R R
03	11,12	-	- -	-	- -	-	- -	-	- -
04	7,8,9	R	R R	R	R R	R	R R	R	R R
05	5,6	R	Y -	-	- -	-	- -	-	- -
06	1,2,3	R	R R	G	Y R	R	R R	R	R R
07	8,9	-	- -	-	- -	G	Y -	-	- -
08	10,11,12	R	R R	R	R R	R	R R	G	Y R
02P	13,14	D	D D	D	D D	D	D D	D	D D
04P	15,16	D	D D	D	D D	D	D D	D	D D
06P	17,18	D	D D	*	D D	D	D D	D	D D
08P	19,20	D	D D	D	D D	D	D D	*	D D
OL'A'									
OL'B'									
OL'C'									
OL'D'									

BARRIER

** CLEARANCE TO A PHASE IN CONFLICT WITH THIS PHASE ON (SEE CHART 1)

* WHEN CALLED, TIMED STEADY WALK, THEN FLASHING DON'T WALK, THEN GOES TO STEADY DON'T WALK

DETECTOR LOGIC

DETECTOR NUMBER	DETECTOR INPUT	DETECTOR OPERATION: CALLS AND EXTENDS	CALLS ONLY	EXTENDS ONLY	PHASE CALLED	PHASE EXTENDED	DETECTOR DISCONNECT PHASE	CALLING DELAY	EXTENSION STRETCH	SIZE	NUMBER OF TURNS
21	1	X			2	2					VIDEO
31	2			X		3			X		VIDEO
32	3	X			3	3					VIDEO
33	3	X			3	3					VIDEO
41	4			X		4			X		VIDEO
42	5	X			4	4					VIDEO
43	5	X			4	4					VIDEO
51	6	X			5	5					VIDEO
52	6	X			5	5					VIDEO
61	7	X			6	6					VIDEO
71	8			X		7			X		VIDEO
72	9	X			7	7					VIDEO
73	9	X			7	7					VIDEO
74	8			X		7			X		VIDEO
75	10	X			7	7					VIDEO
76	10	X			7	7					VIDEO
81	11			X		8			X		VIDEO
82	12	X			8	8					VIDEO
83	12	X			8	8					VIDEO

CONTROLLER LOGIC

PHASE NUMBER	PHASE LOCKING	DUAL ENTRY W / Ø	PHASE RECALL	PHASE ACTIVE
1		6		X
2	X	6	MIN	X
3		8		X
4		8		X
5		2		X
6	X	2	MIN	X
7		4		X
8		4		X

OVERLAPS

O.L. "A" =
O.L. "B" =
O.L. "C" =
O.L. "D" =

SPECIAL OVERLAPS

	PROTECTIVE	PERMISSIVE
O.L. "A" =	-	-
O.L. "B" =	-	-
O.L. "C" =	-	-
O.L. "D" =	-	-

TYPE OF INTERCONNECT COMMUNICATION	
NONE	
TBC	
CLOSED LOOP TWISTED PAIR*	
CLOSED LOOP FIBER OPTIC*	
RADIO	X
*LOCATION OF MASTER CONTROLLER NO: S-	
SIGNAL SYSTEM #: SS- -	

TYPE OF PRE-EMPT	
NONE	
RAILROAD	
EMERGENCY VEHICLE	
OPTICOM	X
TOMAR	
HARDWIRE	
OTHER	
LIFT BRIDGE	
QUEUE DETECTOR	

TYPE OF LIGHTING	
BY OTHER AGENCY	
IN TRAFFIC SIGNAL CABINET	X
IN SEPARATE DOT LIGHTING CABINET	

EMERGENCY VEHICLE PREEMPTION SEQUENCE

EMERGENCY VEHICLE DETECTOR	A	B	C	D
MOVEMENT				
PHASE	2+5	6+1	4+7	8+3

TERMINATE EACH PREEMPTION SEQUENCE WITH AN ALL-RED INTERVAL
AFTER PREEMPTION SEQUENCE 2 OR 6, CONTROLLER SHALL RETURN TO PHASES 2+6.
AFTER PREEMPTION SEQUENCE 4+7 OR 8, CONTROLLER SHALL RETURN TO PHASES 4+8.

CHART 1

PHASE ON	NONCONFLICTING PHASE ALLOWED TO TIME CONCURRENTLY	PHASES IN CONFLICT WITH PHASE ON
1	5 OR 6	2,3,4,7,8
2	5 OR 6	1,3,4,7,8
3	7 OR 8	1,2,4,5,6
4	7 OR 8	1,2,3,5,6
5	1 OR 2	3,4,6,7,8
6	1 OR 2	3,4,5,7,8
7	3 OR 4	1,2,5,6,8
8	3 OR 4	1,2,5,7,8

GENERAL NOTES:

1. ANY ACTUATED PHASE FOR WHICH THERE IS NO CALL SHALL BE SKIPPED.
2. WHEN ONE PHASE IS ON ALONE, ANY NONCONFLICTING PHASE MAY START TIMING CONCURRENTLY WITHOUT A CLEARANCE INTERVAL. (SEE CHART 1 AT LEFT.)
3. IF ANY OPPOSING THRU PHASES ARE TIMING CONCURRENTLY, THEY SHALL TERMINATE TOGETHER DUE TO PERMISSIVE LEFT TURN CONFLICT.

COFFEE ROAD AT NATIONAL AVENUE
CITY OF NEW BERLIN
WAUKESHA COUNTY

SIGNAL NO.

CONTROLLER TYPE: EPAC

DATE 07/13 PAGE NO. 3 OF 3

2

PROJECT ID:	2722-10-70
INTERSECTION:	COFFEE RD AT NATIONAL AVE

SIGNAL WIRE COLOR CODING	BLK-BLACK	RED-RED	GRN-GREEN
	WHT-WHITE	BLU-BLUE	ORG-ORANGE

2

CB1 TO	JUMPER	# OF COND.	HEAD NO.	PHASE	SIGNAL INDICATION WIRE COLOR								PED BUTTON	OTHER
					RED	YELLOW	GREEN	<RED	<YELLOW>	<GREEN>	D/WALK	WALK		
SB1		7	14	2							BLK	BLU		
			B	2									WHT/BLK	
SB2		15	11	8+3	RED	ORG	GRN		BLK/WHT	RED/WHT				
			3	6+1	RED/BLK	ORG/BLK	GRN/BLK		BLU/WHT	GRN/WHT				
			20	8							BLK	BLU		
			B	8									WHT/BLK	
SB3		7	4	2	RED	ORG	GRN							
SB4		21	10	8	BLK/RED	ORG/RED	BLU/RED							
			9	4+7	RED	ORG	GRN		BLK/WHT	RED/WHT				
			2	6+1	RED/BLK	ORG/BLK	GRN/BLK		BLU/WHT	GRN/WHT				
			17	6							BLK	BLU		
			19	8							RED/GRN	ORG/GRN		
			B	6									WHT/BLK	
			B	8									BLU/BLK	
SB5		21	1	6	BLK/RED	ORG/RED	BLU/RED							
			8	4+7	RED	ORG	GRN		BLK/WHT	RED/WHT				
			6	2+5	RED/BLK	ORG/BLK	GRN/BLK		BLU/WHT	GRN/WHT				
			15	4							BLK	BLU		
			18	6							RED/GRN	ORG/GRN		
			B	4									WHT/BLK	
			B	6									BLU/BLK	
SB6		12	5	2+5	RED	ORG	GRN		BLK	BLU				
SB7		7	13	2							BLK	BLU		
			B	4									WHT/BLK	
SB8		15	12	8+3	RED	ORG	GRN							
			7	4	RED/BLK	ORG/BLK	GRN/BLK		BLU/WHT	GRN/WHT				
			16	4							BLK	BLU		
			B	2									WHT/BLK	

EQUIPMENT GROUNDING CONDUCTOR 10 AWG GRN XLP	
FROM	TO
CB1	SB1
SB1	SB2
SB2	SB3
SB3	SB4
SB4	SB5
SB5	SB6
SB6	SB7
SB7	SB8
SB8	CB1

PULL BOX BONDING JUMPER 10 AWG GRN XLP	
FROM	TO
CB1	PB1
SB2	PB2
SB4	PB3
SB5	PB4
SB6	PB5
SB8	PB6
CB1	PB7

LIGHTING UF 12 AWG W/GROUND	
FROM	TO
CB1	SB2
SB2	SB4
CB1	SB8
SB8	SB6
SB6	SB5

EMERGENCY VEHICLE PREEMPTION	
FROM	TO
CB1	SB6 (HEAD 'A')
CB1	SB4 (HEAD 'B')
CB1	SB2 (HEAD 'C')
CB1	SB2 (HEAD 'D')

VIDEO VEHICLE DETECTOR CABLE	
FROM	TO
CB1	SB2
CB1	SB4
CB1	SB4
CB1	SB6

NOTES:

1. USE WHITE CONDUCTOR IN THE SIGNAL CABLE AS THE GROUNDED CONDUCTOR FOR ALL TRAFFIC SIGNAL INDICATIONS.
2. ENSURE THE GROUNDED CONDUCTOR IN THE FEEDER CABLE AND THE POLE CABLES ARE BOTH 18" LONGER THAN THE UNGROUNDED CONDUCTORS.
3. AT THE SIGNAL BASES, CONNECT ONE TERMINAL FROM THE PEDESTRIAN PUSH BUTTONS TO THE COLOR INDICATED IN THE CHART. CONNECT THE OTHER TERMINAL TO THE GROUNDED CONDUCTOR.

2

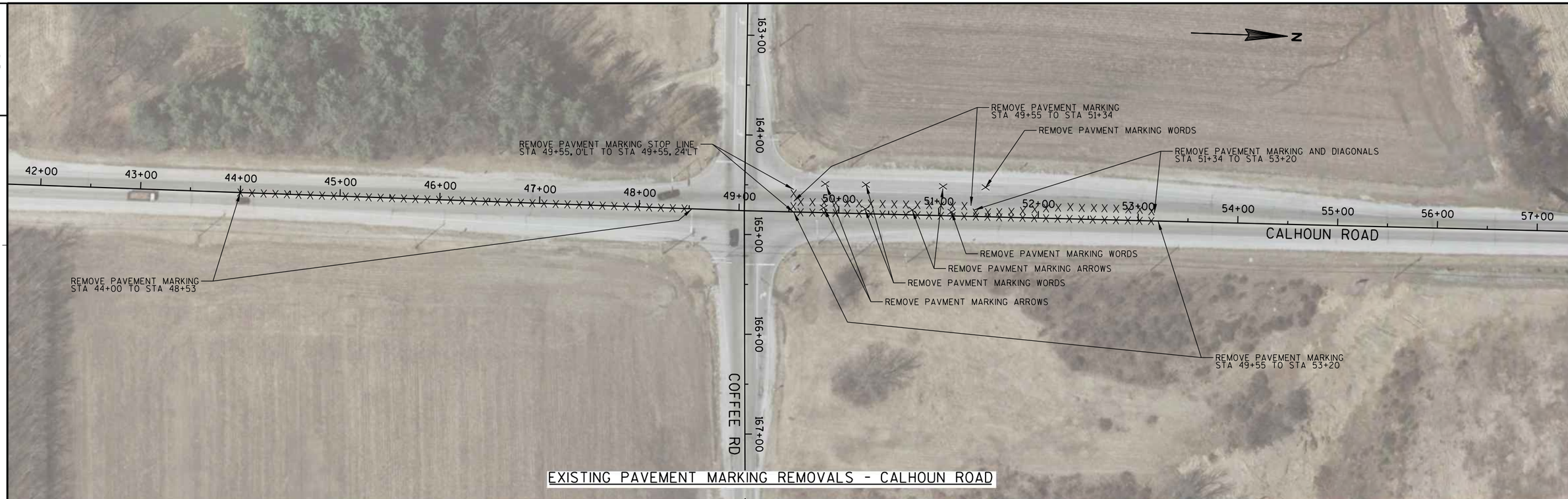

EXISTING PAVEMENT MARKING REMOVALS - CALHOUN ROAD

EXISTING PAVEMENT MARKING REMOVALS - MOORLAND ROAD

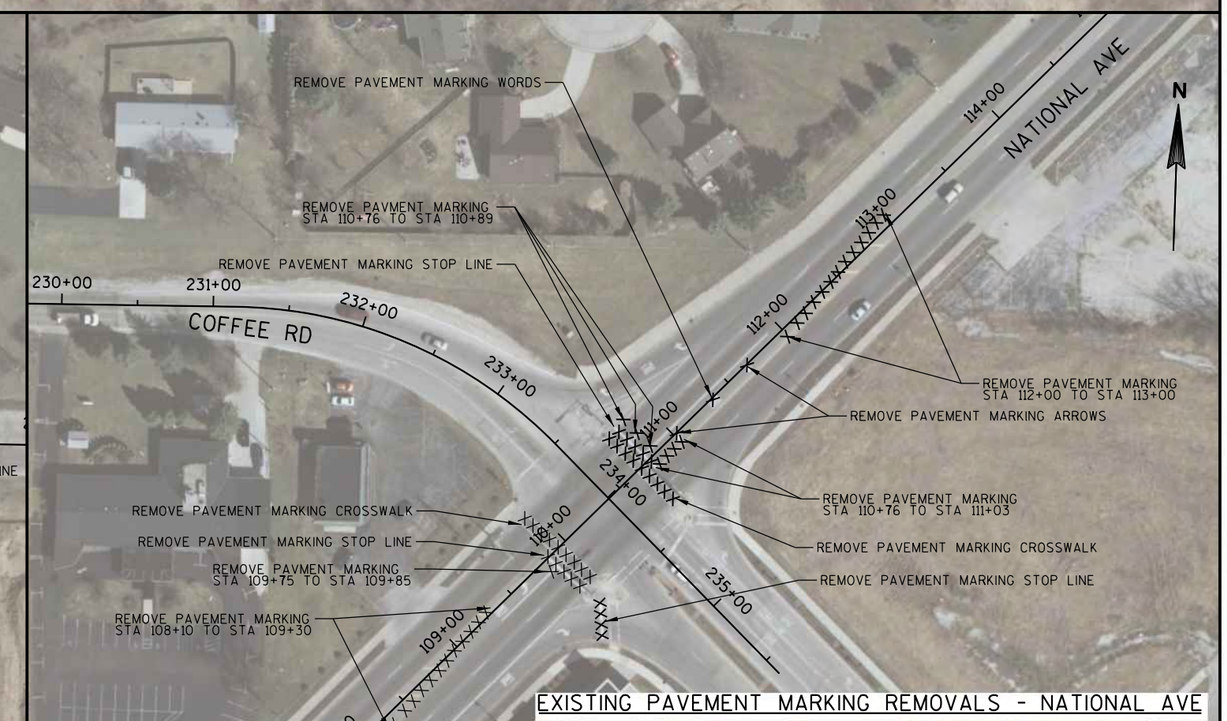

EXISTING PAVEMENT MARKING REMOVALS - NATIONAL AVE

PROJECT NO: 2722-10-70	HWY: COFFEE ROAD	COUNTY: WAUKESHA	PAVEMENT MARKING REMOVAL PLAN	SHEET 72	E

FILE NAME : S:\Wauk_Co\NewBerlin\Gov\08.0099 Coffee Rd\Design\024500_PM.dgn PLOT DATE : 10/30/2013 PLOT BY : Nick_B PLOT NAME : PLOT SCALE : 1:100

WISDOT/CADDS SHEET 42

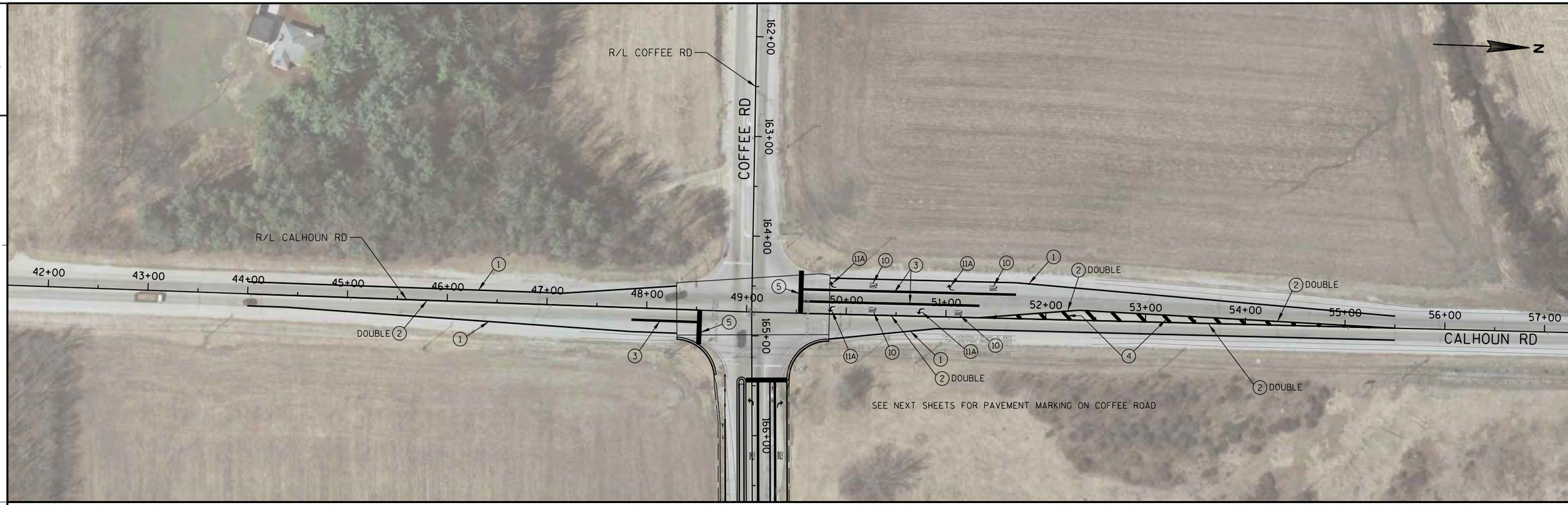

2

LEGEND

1. PAVEMENT MARKING EPOXY 4-INCH, WHITE
1A. PAVEMENT MARKING EPOXY 4-INCH, WHITE DASHED, 3' STRIPE W/ 9' SPACE
1B. PAVEMENT MARKING EPOXY 4-INCH, WHITE DASHED, 12.5' STRIPE W/ 37.5' SPACE
2. PAVEMENT MARKING EPOXY 4-INCH, YELLOW
2A. PAVEMENT MARKING EPOXY 4-INCH, YELLOW DASHED, 12.5' STRIPE W/ 37.5' SPACE
2B. PAVEMENT MARKING EPOXY 4-INCH, YELLOW DASHED, 2' STRIPE W/ 6' SPACE
3. PAVEMENT MARKING EPOXY 8-INCH, WHITE
3A. PAVEMENT MARKING EPOXY 8-INCH, WHITE DASHED, 3' STRIPE W/ 9' SPACE
3B. PAVEMENT MARKING EPOXY 8-INCH, WHITE DASHED, 2' STRIPE W/ 6' SPACE
4. PAVEMENT MARKING EPOXY 12-INCH, DIAGONAL YELLOW, 25' SPACE
5. PAVEMENT MARKING STOP LINE EPOXY 18-INCH, WHITE
6. PAVEMENT MARKING YIELD LINE SYMBOLS EPOXY 18-INCH
7. PAVEMENT MARKING CROSSWALK 6-INCH EPOXY
8. PAVEMENT MARKING CURB EPOXY, YELLOW
9. PAVEMENT MARKING ISLAND NOSE EPOXY, YELLOW
10. PAVEMENT MARKING WORDS EPOXY, WHITE
11A. PAVEMENT MARKING ARROWS TYPE 2 EPOXY, WHITE
11B. PAVEMENT MARKING ARROWS TYPE 3 EPOXY, WHITE
12. PAVEMENT MARKING SYMBOLS BIKE LANE EPOXY
13. PAVEMENT MARKING ARROWS BIKE LANE EPOXY
14. CURB RAMP DETECTABLE WARNING FIELD

PROJECT NO: 2722-10-70	HWY: COFFEE ROAD	COUNTY: WAUKESHA	PAVEMENT MARKING PLAN	SHEET 73	E

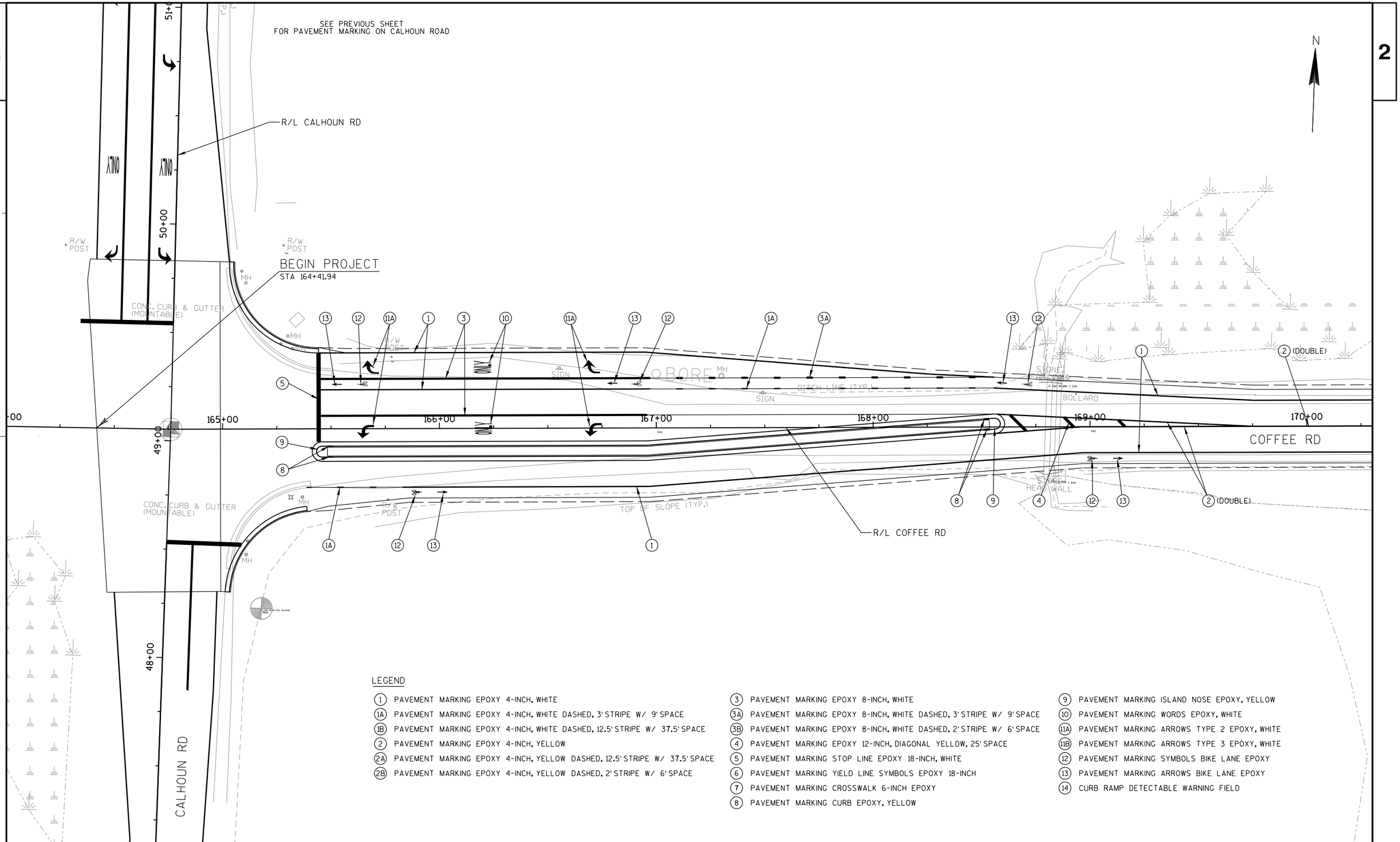

LEGEND

1. PAVEMENT MARKING EPOXY 4-INCH, WHITE
1A. PAVEMENT MARKING EPOXY 4-INCH, WHITE DASHED, 3' STRIPE W/ 9' SPACE
1B. PAVEMENT MARKING EPOXY 4-INCH, WHITE DASHED, 12.5' STRIPE W/ 37.5' SPACE
2. PAVEMENT MARKING EPOXY 4-INCH, YELLOW
2A. PAVEMENT MARKING EPOXY 4-INCH, YELLOW DASHED, 12.5' STRIPE W/ 37.5' SPACE
2B. PAVEMENT MARKING EPOXY 4-INCH, YELLOW DASHED, 2' STRIPE W/ 6' SPACE
3. PAVEMENT MARKING EPOXY 8-INCH, WHITE
3A. PAVEMENT MARKING EPOXY 8-INCH, WHITE DASHED, 3' STRIPE W/ 9' SPACE
3B. PAVEMENT MARKING EPOXY 8-INCH, WHITE DASHED, 2' STRIPE W/ 6' SPACE
4. PAVEMENT MARKING EPOXY 12-INCH, DIAGONAL YELLOW, 25' SPACE
5. PAVEMENT MARKING STOP LINE EPOXY 18-INCH, WHITE
6. PAVEMENT MARKING YIELD LINE SYMBOLS EPOXY 18-INCH
7. PAVEMENT MARKING CROSSWALK 6-INCH EPOXY
8. PAVEMENT MARKING CURB EPOXY, YELLOW
9. PAVEMENT MARKING ISLAND NOSE EPOXY, YELLOW
10. PAVEMENT MARKING WORDS EPOXY, WHITE
11A. PAVEMENT MARKING ARROWS TYPE 2 EPOXY, WHITE
11B. PAVEMENT MARKING ARROWS TYPE 3 EPOXY, WHITE
12. PAVEMENT MARKING SYMBOLS BIKE LANE EPOXY
13. PAVEMENT MARKING ARROWS BIKE LANE EPOXY
14. CURB RAMP DETECTABLE WARNING FIELD

PROJECT NO: 2722-10-70	HWY: COFFEE ROAD	COUNTY: WAUKESHA	PAVEMENT MARKING PLAN	SHEET 74	E

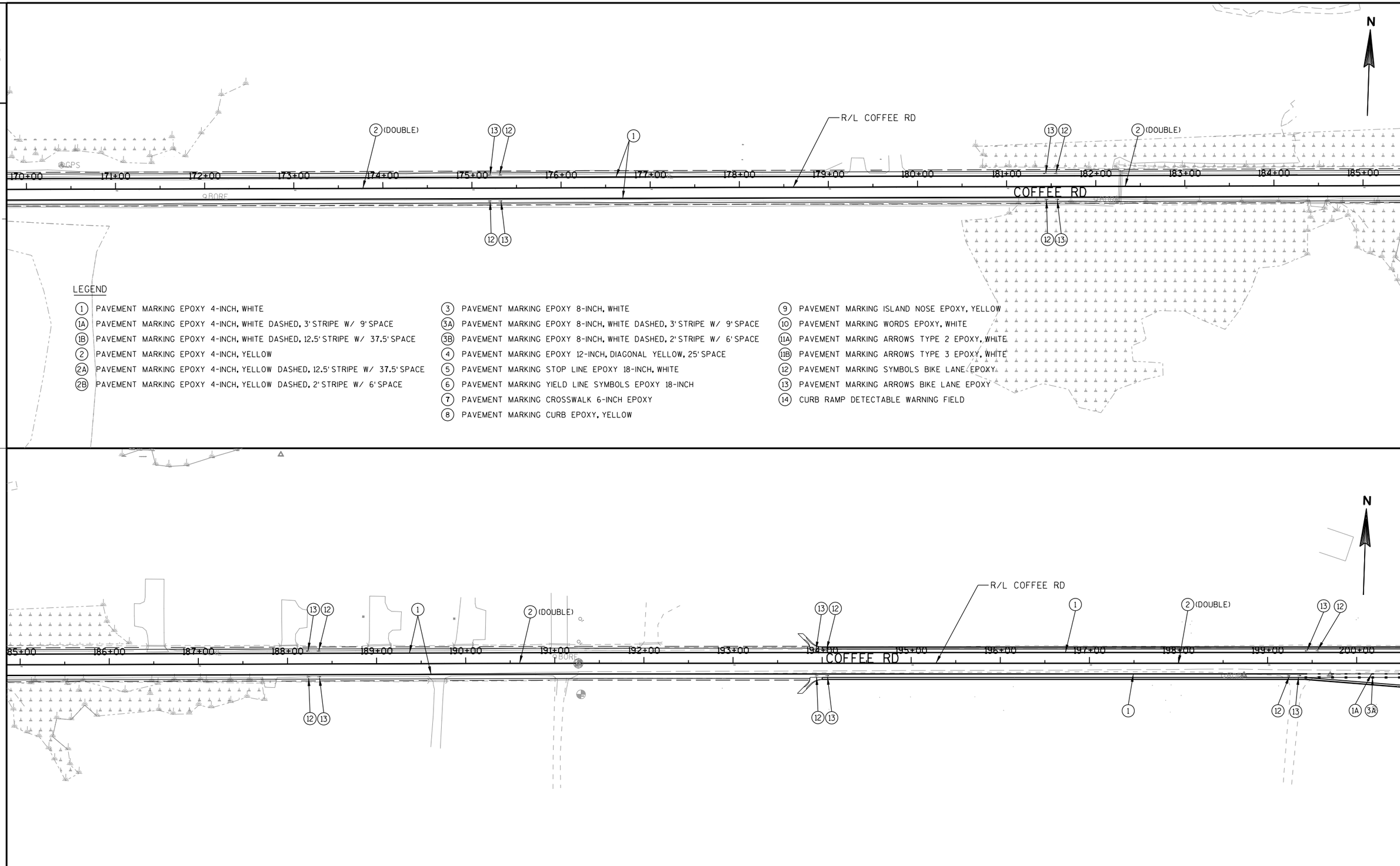

LEGEND

1. PAVEMENT MARKING EPOXY 4-INCH, WHITE
1A. PAVEMENT MARKING EPOXY 4-INCH, WHITE DASHED, 3' STRIPE W/ 9' SPACE
1B. PAVEMENT MARKING EPOXY 4-INCH, WHITE DASHED, 12.5' STRIPE W/ 37.5' SPACE
2. PAVEMENT MARKING EPOXY 4-INCH, YELLOW
2A. PAVEMENT MARKING EPOXY 4-INCH, YELLOW DASHED, 12.5' STRIPE W/ 37.5' SPACE
2B. PAVEMENT MARKING EPOXY 4-INCH, YELLOW DASHED, 2' STRIPE W/ 6' SPACE
3. PAVEMENT MARKING EPOXY 8-INCH, WHITE
3A. PAVEMENT MARKING EPOXY 8-INCH, WHITE DASHED, 3' STRIPE W/ 9' SPACE
3B. PAVEMENT MARKING EPOXY 8-INCH, WHITE DASHED, 2' STRIPE W/ 6' SPACE
4. PAVEMENT MARKING EPOXY 12-INCH, DIAGONAL YELLOW, 25' SPACE
5. PAVEMENT MARKING STOP LINE EPOXY 18-INCH, WHITE
6. PAVEMENT MARKING YIELD LINE SYMBOLS EPOXY 18-INCH
7. PAVEMENT MARKING CROSSWALK 6-INCH EPOXY
8. PAVEMENT MARKING CURB EPOXY, YELLOW
9. PAVEMENT MARKING ISLAND NOSE EPOXY, YELLOW
10. PAVEMENT MARKING WORDS EPOXY, WHITE
11A. PAVEMENT MARKING ARROWS TYPE 2 EPOXY, WHITE
11B. PAVEMENT MARKING ARROWS TYPE 3 EPOXY, WHITE
12. PAVEMENT MARKING SYMBOLS BIKE LANE EPOXY
13. PAVEMENT MARKING ARROWS BIKE LANE EPOXY
14. CURB RAMP DETECTABLE WARNING FIELD

PROJECT NO: 2722-10-70	HWY: COFFEE ROAD	COUNTY: WAUKESHA	PAVEMENT MARKING PLAN	SHEET 75	E

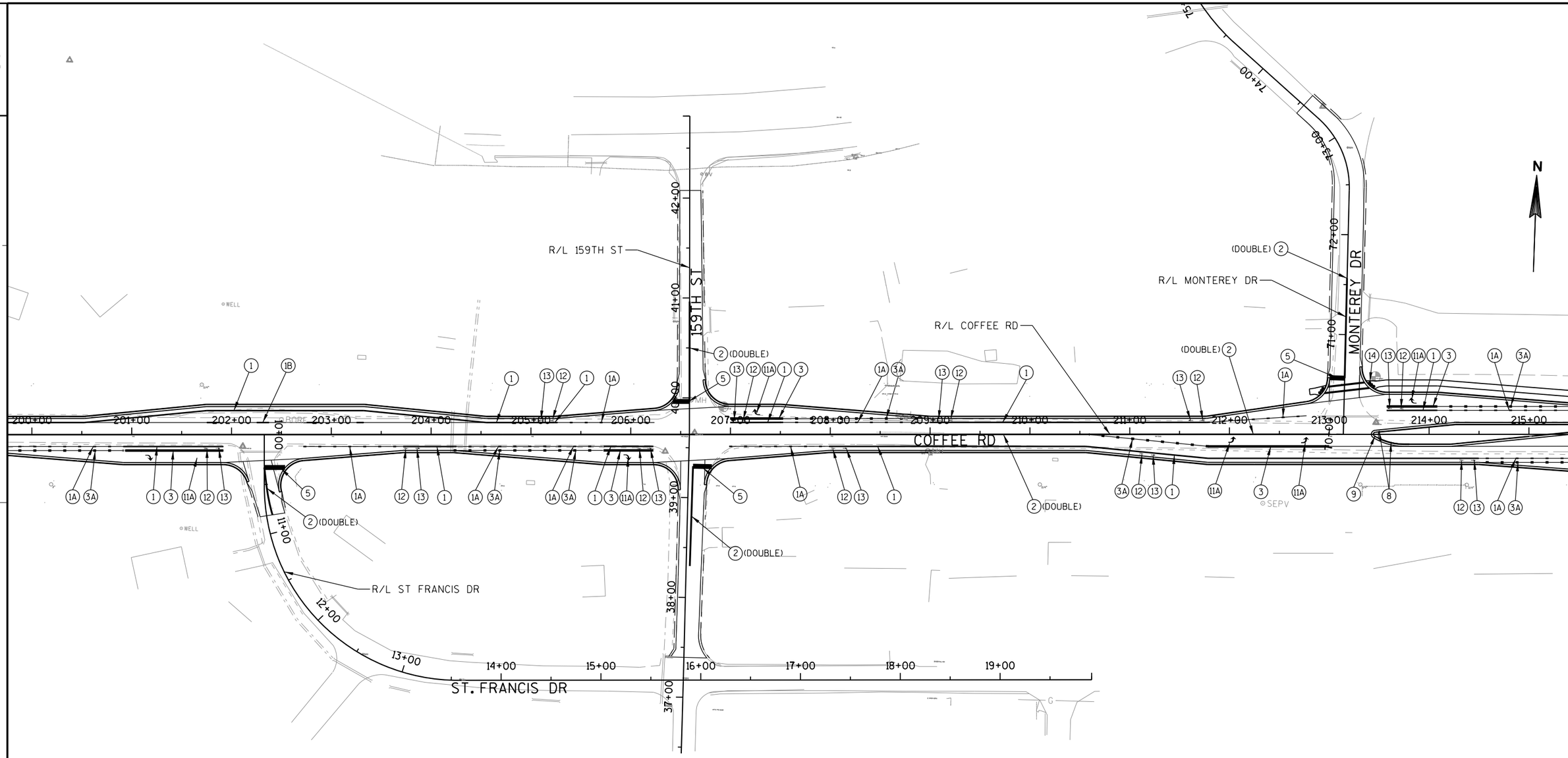

LEGEND

1. PAVEMENT MARKING EPOXY 4-INCH, WHITE
1A. PAVEMENT MARKING EPOXY 4-INCH, WHITE DASHED, 3' STRIPE W/ 9' SPACE
1B. PAVEMENT MARKING EPOXY 4-INCH, WHITE DASHED, 12.5' STRIPE W/ 37.5' SPACE
2. PAVEMENT MARKING EPOXY 4-INCH, YELLOW
2A. PAVEMENT MARKING EPOXY 4-INCH, YELLOW DASHED, 12.5' STRIPE W/ 37.5' SPACE
2B. PAVEMENT MARKING EPOXY 4-INCH, YELLOW DASHED, 2' STRIPE W/ 6' SPACE
3. PAVEMENT MARKING EPOXY 8-INCH, WHITE
3A. PAVEMENT MARKING EPOXY 8-INCH, WHITE DASHED, 3' STRIPE W/ 9' SPACE
3B. PAVEMENT MARKING EPOXY 8-INCH, WHITE DASHED, 2' STRIPE W/ 6' SPACE
4. PAVEMENT MARKING EPOXY 12-INCH, DIAGONAL YELLOW, 25' SPACE
5. PAVEMENT MARKING STOP LINE EPOXY 18-INCH, WHITE
6. PAVEMENT MARKING YIELD LINE SYMBOLS EPOXY 18-INCH
7. PAVEMENT MARKING CROSSWALK 6-INCH EPOXY
8. PAVEMENT MARKING CURB EPOXY, YELLOW
9. PAVEMENT MARKING ISLAND NOSE EPOXY, YELLOW
10. PAVEMENT MARKING WORDS EPOXY, WHITE
11A. PAVEMENT MARKING ARROWS TYPE 2 EPOXY, WHITE
11B. PAVEMENT MARKING ARROWS TYPE 3 EPOXY, WHITE
12. PAVEMENT MARKING SYMBOLS BIKE LANE EPOXY
13. PAVEMENT MARKING ARROWS BIKE LANE EPOXY
14. CURB RAMP DETECTABLE WARNING FIELD

PROJECT NO: 2722-10-70	HWY: COFFEE ROAD	COUNTY: WAUKESHA	PAVEMENT MARKING PLAN	SHEET 76	E

2

LEGEND

1. PAVEMENT MARKING EPOXY 4-INCH, WHITE
1A. PAVEMENT MARKING EPOXY 4-INCH, WHITE DASHED, 3' STRIPE W/ 9' SPACE
1B. PAVEMENT MARKING EPOXY 4-INCH, WHITE DASHED, 12.5' STRIPE W/ 37.5' SPACE
2. PAVEMENT MARKING EPOXY 4-INCH, YELLOW
2A. PAVEMENT MARKING EPOXY 4-INCH, YELLOW DASHED, 12.5' STRIPE W/ 37.5' SPACE
2B. PAVEMENT MARKING EPOXY 4-INCH, YELLOW DASHED, 2' STRIPE W/ 6' SPACE
3. PAVEMENT MARKING EPOXY 8-INCH, WHITE
3A. PAVEMENT MARKING EPOXY 8-INCH, WHITE DASHED, 3' STRIPE W/ 9' SPACE
3B. PAVEMENT MARKING EPOXY 8-INCH, WHITE DASHED, 2' STRIPE W/ 6' SPACE
4. PAVEMENT MARKING EPOXY 12-INCH, DIAGONAL YELLOW, 25' SPACE
5. PAVEMENT MARKING STOP LINE EPOXY 18-INCH, WHITE
6. PAVEMENT MARKING YIELD LINE SYMBOLS EPOXY 18-INCH
7. PAVEMENT MARKING CROSSWALK 6-INCH EPOXY
8. PAVEMENT MARKING CURB EPOXY, YELLOW
9. PAVEMENT MARKING ISLAND NOSE EPOXY, YELLOW
10. PAVEMENT MARKING WORDS EPOXY, WHITE
11A. PAVEMENT MARKING ARROWS TYPE 2 EPOXY, WHITE
11B. PAVEMENT MARKING ARROWS TYPE 3 EPOXY, WHITE
12. PAVEMENT MARKING SYMBOLS BIKE LANE EPOXY
13. PAVEMENT MARKING ARROWS BIKE LANE EPOXY
14. CURB RAMP DETECTABLE WARNING FIELD

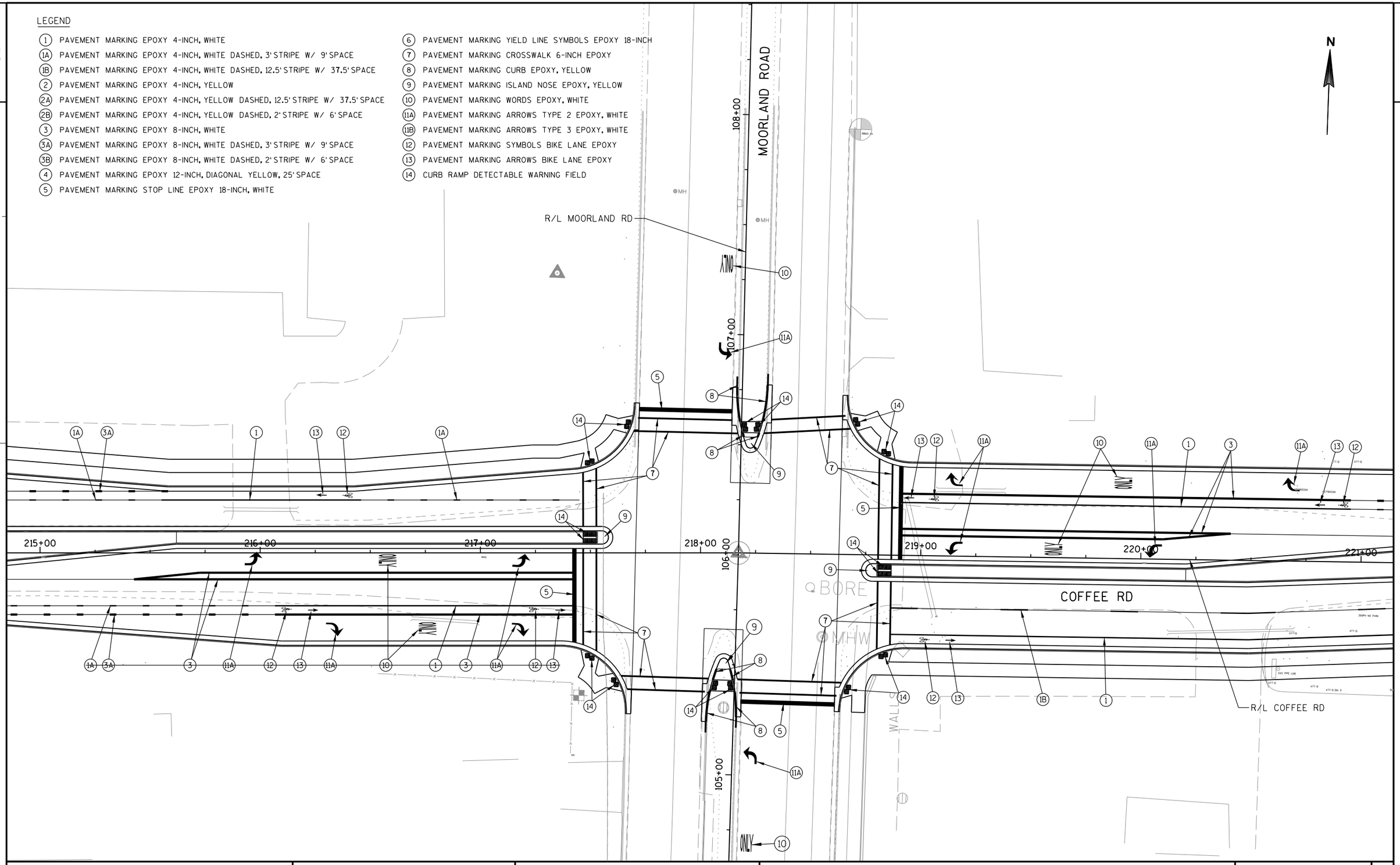

2

PROJECT NO: 2722-10-70	HWY: COFFEE ROAD	COUNTY: WAUKESHA	PAVEMENT MARKING PLAN	SHEET 77	E

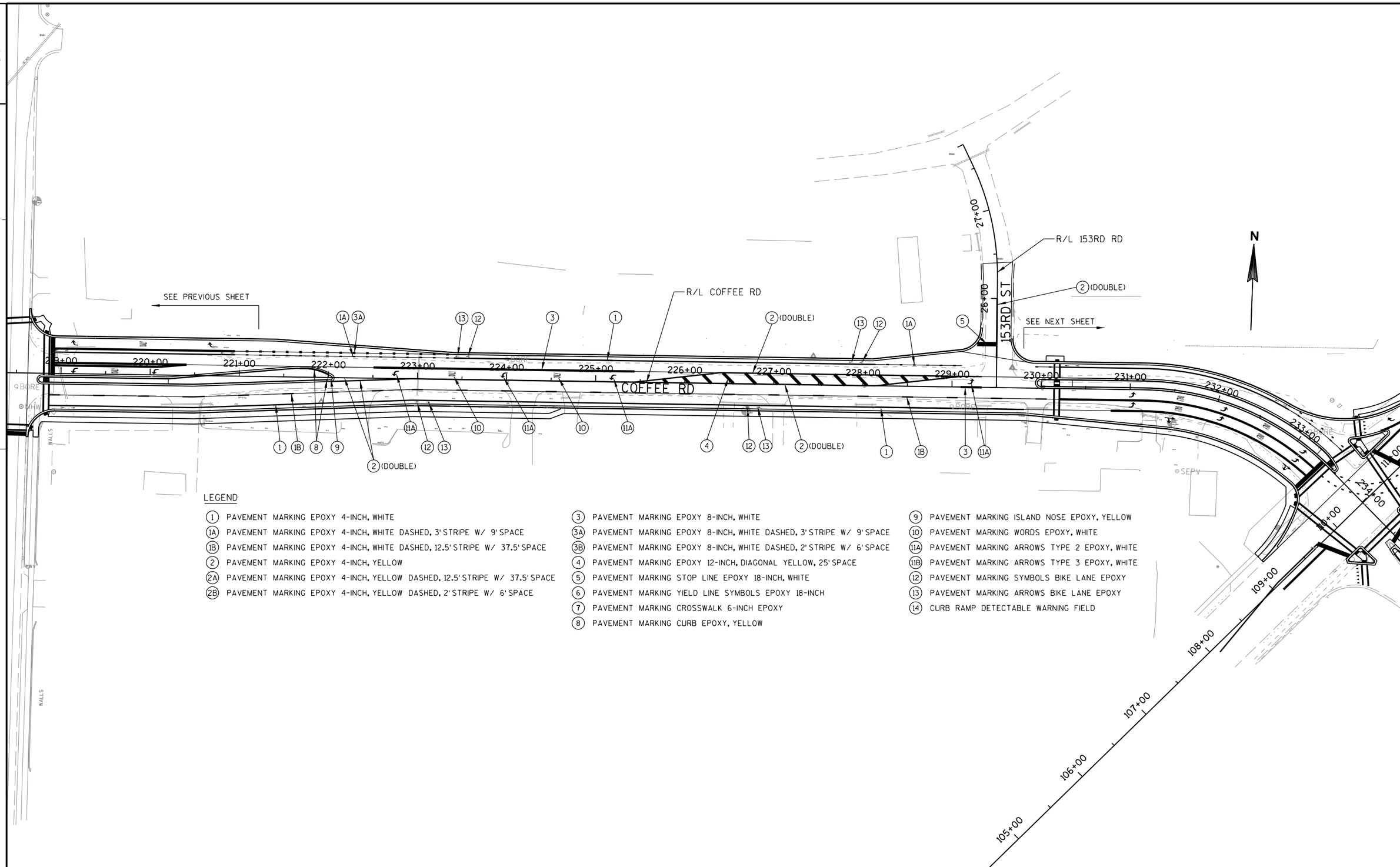

LEGEND

1. PAVEMENT MARKING EPOXY 4-INCH, WHITE
1A. PAVEMENT MARKING EPOXY 4-INCH, WHITE DASHED, 3' STRIPE W/ 9' SPACE
1B. PAVEMENT MARKING EPOXY 4-INCH, WHITE DASHED, 12.5' STRIPE W/ 37.5' SPACE
2. PAVEMENT MARKING EPOXY 4-INCH, YELLOW
2A. PAVEMENT MARKING EPOXY 4-INCH, YELLOW DASHED, 12.5' STRIPE W/ 37.5' SPACE
2B. PAVEMENT MARKING EPOXY 4-INCH, YELLOW DASHED, 2' STRIPE W/ 6' SPACE
3. PAVEMENT MARKING EPOXY 8-INCH, WHITE
3A. PAVEMENT MARKING EPOXY 8-INCH, WHITE DASHED, 3' STRIPE W/ 9' SPACE
3B. PAVEMENT MARKING EPOXY 8-INCH, WHITE DASHED, 2' STRIPE W/ 6' SPACE
4. PAVEMENT MARKING EPOXY 12-INCH, DIAGONAL YELLOW, 25' SPACE
5. PAVEMENT MARKING STOP LINE EPOXY 18-INCH, WHITE
6. PAVEMENT MARKING YIELD LINE SYMBOLS EPOXY 18-INCH
7. PAVEMENT MARKING CROSSWALK 6-INCH EPOXY
8. PAVEMENT MARKING CURB EPOXY, YELLOW
9. PAVEMENT MARKING ISLAND NOSE EPOXY, YELLOW
10. PAVEMENT MARKING WORDS EPOXY, WHITE
11A. PAVEMENT MARKING ARROWS TYPE 2 EPOXY, WHITE
11B. PAVEMENT MARKING ARROWS TYPE 3 EPOXY, WHITE
12. PAVEMENT MARKING SYMBOLS BIKE LANE EPOXY
13. PAVEMENT MARKING ARROWS BIKE LANE EPOXY
14. CURB RAMP DETECTABLE WARNING FIELD

PROJECT NO: 2722-10-70	HWY: COFFEE ROAD	COUNTY: WAUKESHA	PAVEMENT MARKING PLAN	SHEET 78	E

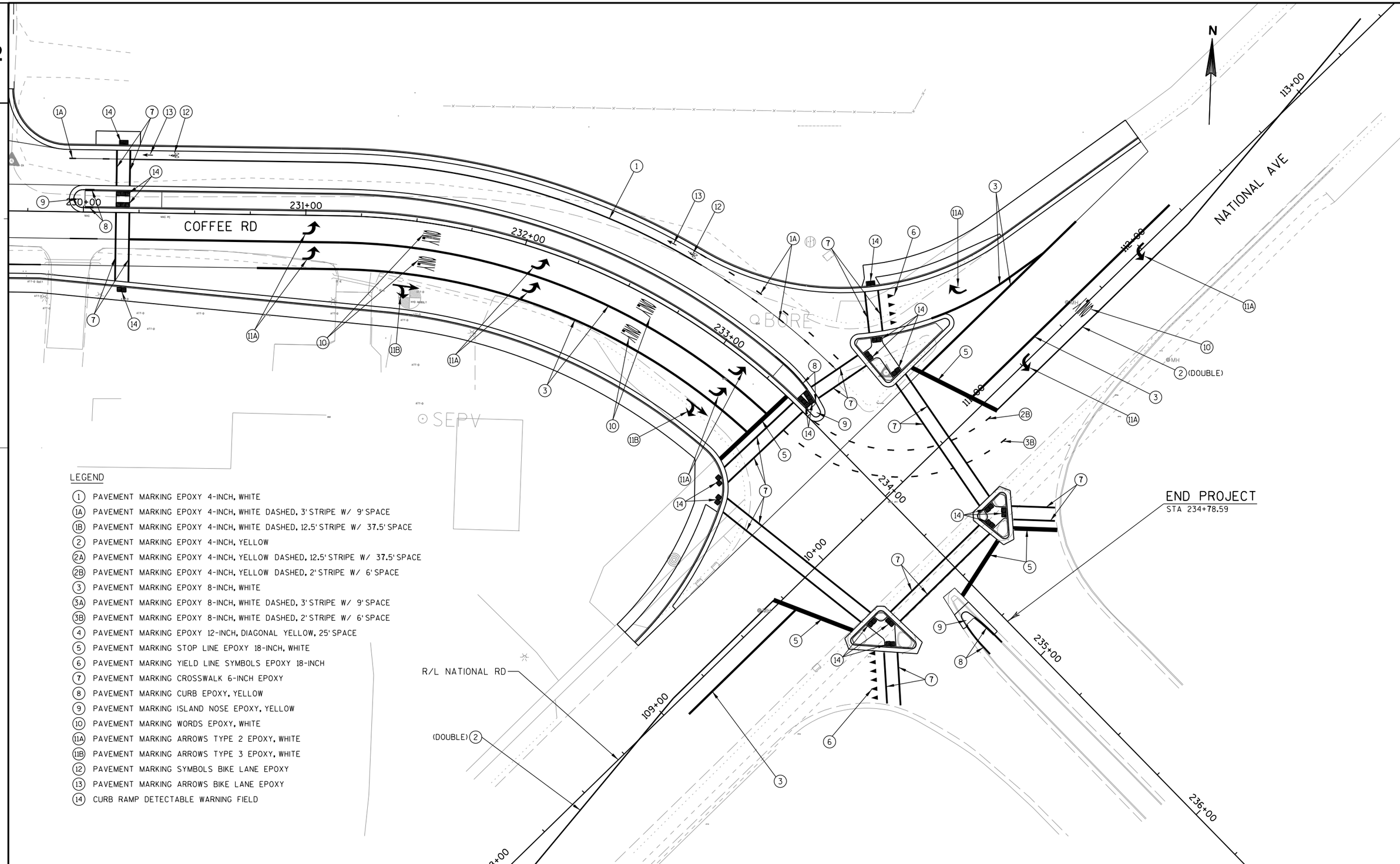

LEGEND

1. PAVEMENT MARKING EPOXY 4-INCH, WHITE
1A. PAVEMENT MARKING EPOXY 4-INCH, WHITE DASHED, 3' STRIPE W/ 9' SPACE
1B. PAVEMENT MARKING EPOXY 4-INCH, WHITE DASHED, 12.5' STRIPE W/ 37.5' SPACE
2. PAVEMENT MARKING EPOXY 4-INCH, YELLOW
2A. PAVEMENT MARKING EPOXY 4-INCH, YELLOW DASHED, 12.5' STRIPE W/ 37.5' SPACE
2B. PAVEMENT MARKING EPOXY 4-INCH, YELLOW DASHED, 2' STRIPE W/ 6' SPACE
3. PAVEMENT MARKING EPOXY 8-INCH, WHITE
3A. PAVEMENT MARKING EPOXY 8-INCH, WHITE DASHED, 3' STRIPE W/ 9' SPACE
3B. PAVEMENT MARKING EPOXY 8-INCH, WHITE DASHED, 2' STRIPE W/ 6' SPACE
4. PAVEMENT MARKING EPOXY 12-INCH, DIAGONAL YELLOW, 25' SPACE
5. PAVEMENT MARKING STOP LINE EPOXY 18-INCH, WHITE
6. PAVEMENT MARKING YIELD LINE SYMBOLS EPOXY 18-INCH
7. PAVEMENT MARKING CROSSWALK 6-INCH EPOXY
8. PAVEMENT MARKING CURB EPOXY, YELLOW
9. PAVEMENT MARKING ISLAND NOSE EPOXY, YELLOW
10. PAVEMENT MARKING WORDS EPOXY, WHITE
11A. PAVEMENT MARKING ARROWS TYPE 2 EPOXY, WHITE
11B. PAVEMENT MARKING ARROWS TYPE 3 EPOXY, WHITE
12. PAVEMENT MARKING SYMBOLS BIKE LANE EPOXY
13. PAVEMENT MARKING ARROWS BIKE LANE EPOXY
14. CURB RAMP DETECTABLE WARNING FIELD

PROJECT NO: 2722-10-70	HWY: COFFEE ROAD	COUNTY: WAUKESHA	PAVEMENT MARKING PLAN	SHEET 79	E

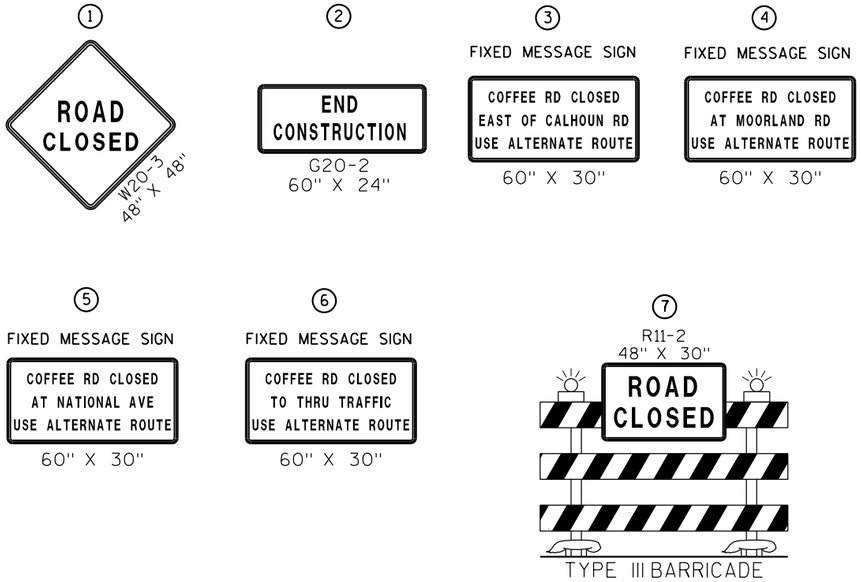

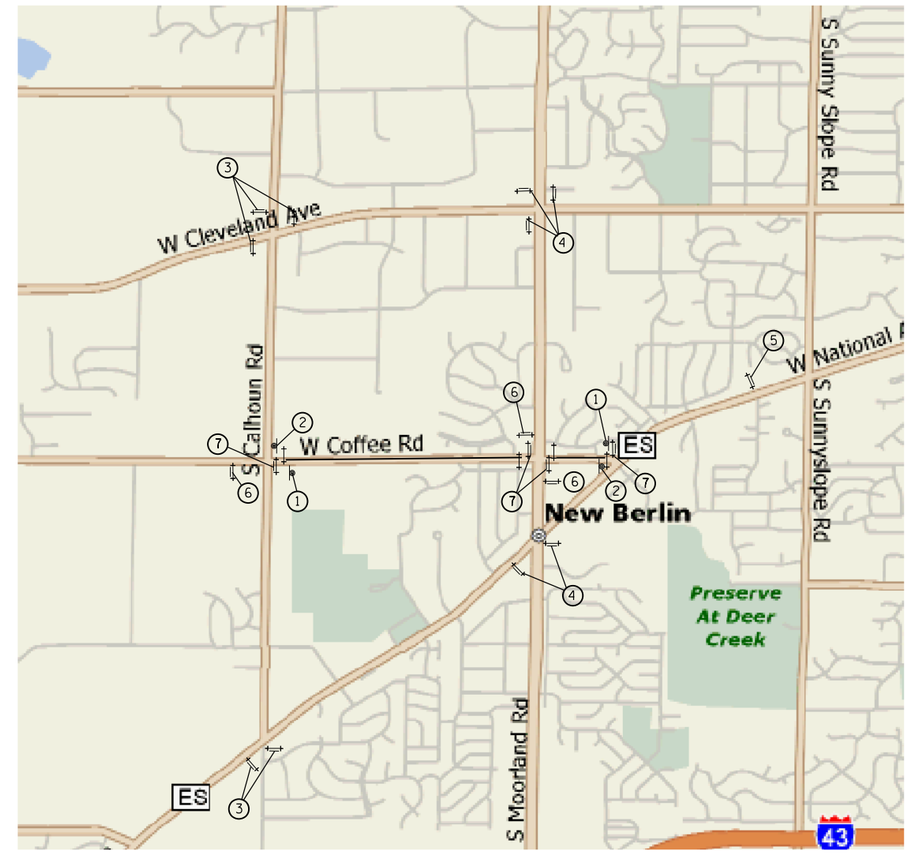

LEGEND:

‡/‡ TYPE III BARRICADE WITH TWO TYPE 'A' FLASHERS. WARNING SIGN TO BE MOUNTED ON BARRICADE WHERE INDICATED ON PLANS

SIGN ON PERMANENT SUPPORT

GENERAL NOTES:

ALL EXISTING SIGN MESSAGES THAT CONFLICT WITH TRAFFIC CONTROL SHALL BE COVERED OR REMOVED.

ACCESS TO ALL EXISTING PROPERTIES WITHIN THE PROJECT LIMITS MUST BE MAINTAINED THROUGHOUT CONSTRUCTION. DURING TIMES WHEN CONSTRUCTION DOES NOT ALLOW ACCESS, PROPERTY OWNERS SHALL BE NOTIFIED WELL IN ADVANCE BY THE CONTRACTOR.

SEE SDD, "BARRICADES AND SIGNS FOR MAINLINE CLOSURES" (DETAIL E) AT CALHOUN RD, MOORLAND RD, AND NATIONAL AVE.

SEE SDD, "BARRICADES AND SIGNS FOR SIDEROAD CLOSURES" (DETAIL 4) AT ST. FRANCIS DR, 159TH ST, MONTEREY DR, AND 153RD ST.

2

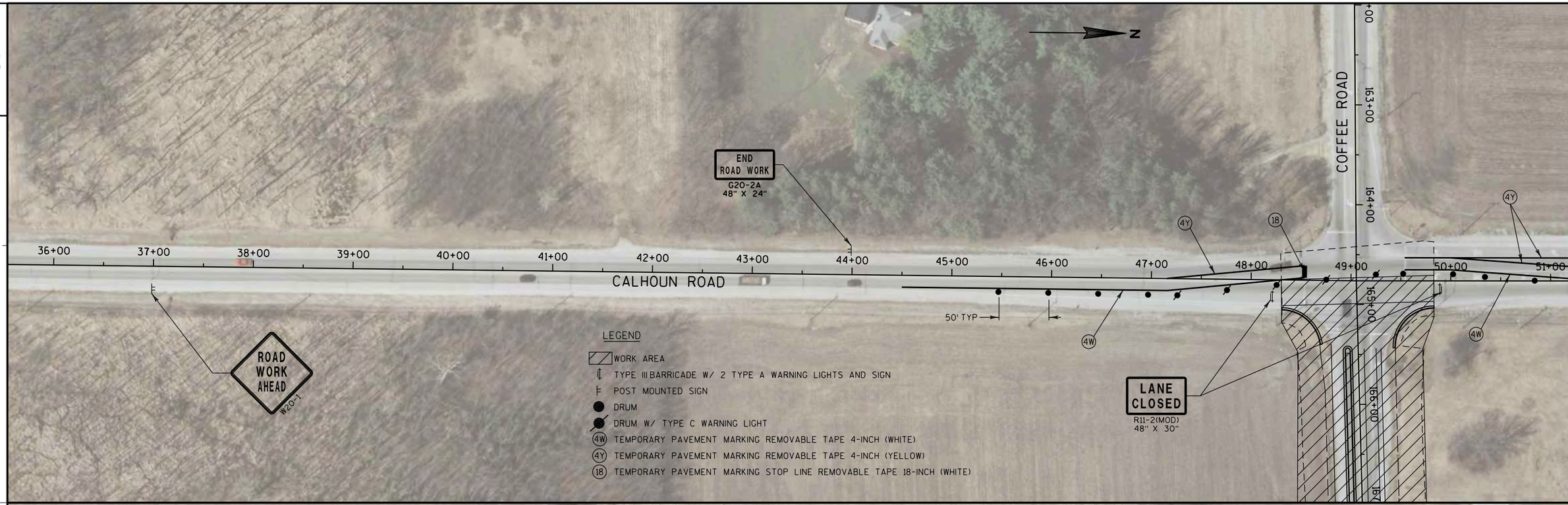

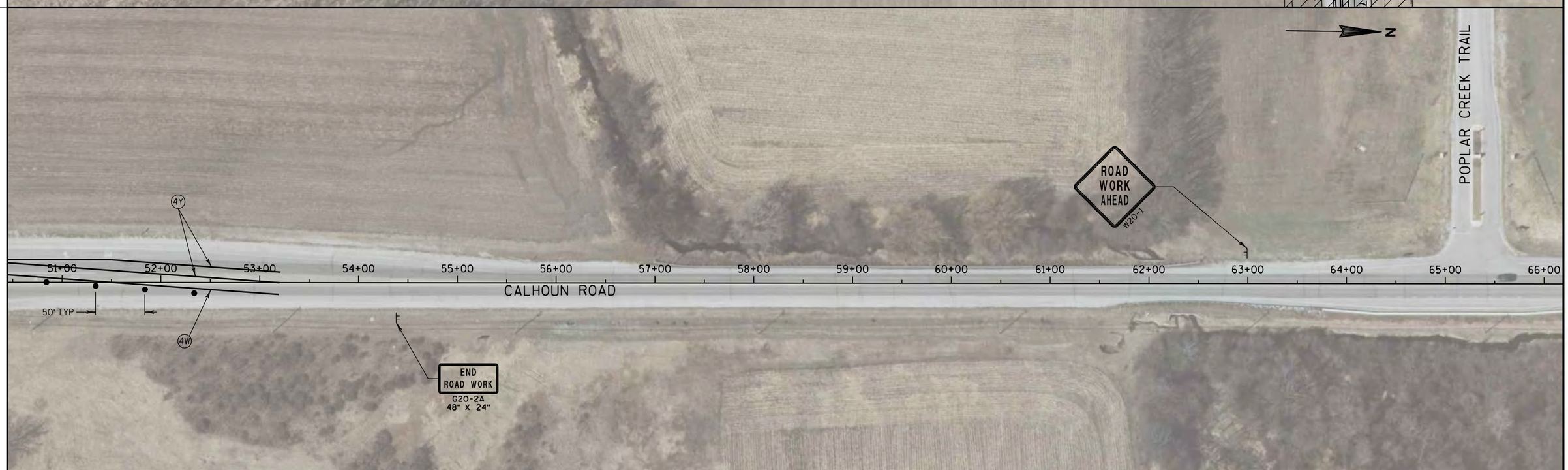

2

PROJECT NO: 2722-10-70	HWY: COFFEE ROAD	COUNTY: WAUKESHA	TRAFFIC CONTROL: CALHOUN ROAD STAGE 1	SHEET 81	E

FILE NAME : S:\Wauk_Co\NewBerlin\Gov\08.0099 Coffee Rd\Design\025090_TC.dgn PLOT DATE : 10/30/2013 PLOT BY : Nick_B PLOT NAME : PLOT SCALE : 1:100

WISDOT/CADDS SHEET 42

2

2

PROJECT NO: 2722-10-70	HWY: COFFEE ROAD	COUNTY: WAUKESHA	TRAFFIC CONTROL: CALHOUN ROAD STAGE 2	SHEET 82	E

FILE NAME : S:\Wauk_Co\NewBerlin\Gov\08.0099 Coffee Rd\Design\025091_TC.dgn PLOT DATE : 10/30/2013 PLOT BY : Nick_B PLOT NAME : PLOT SCALE : 1:100

WISDOT/CADDS SHEET 42

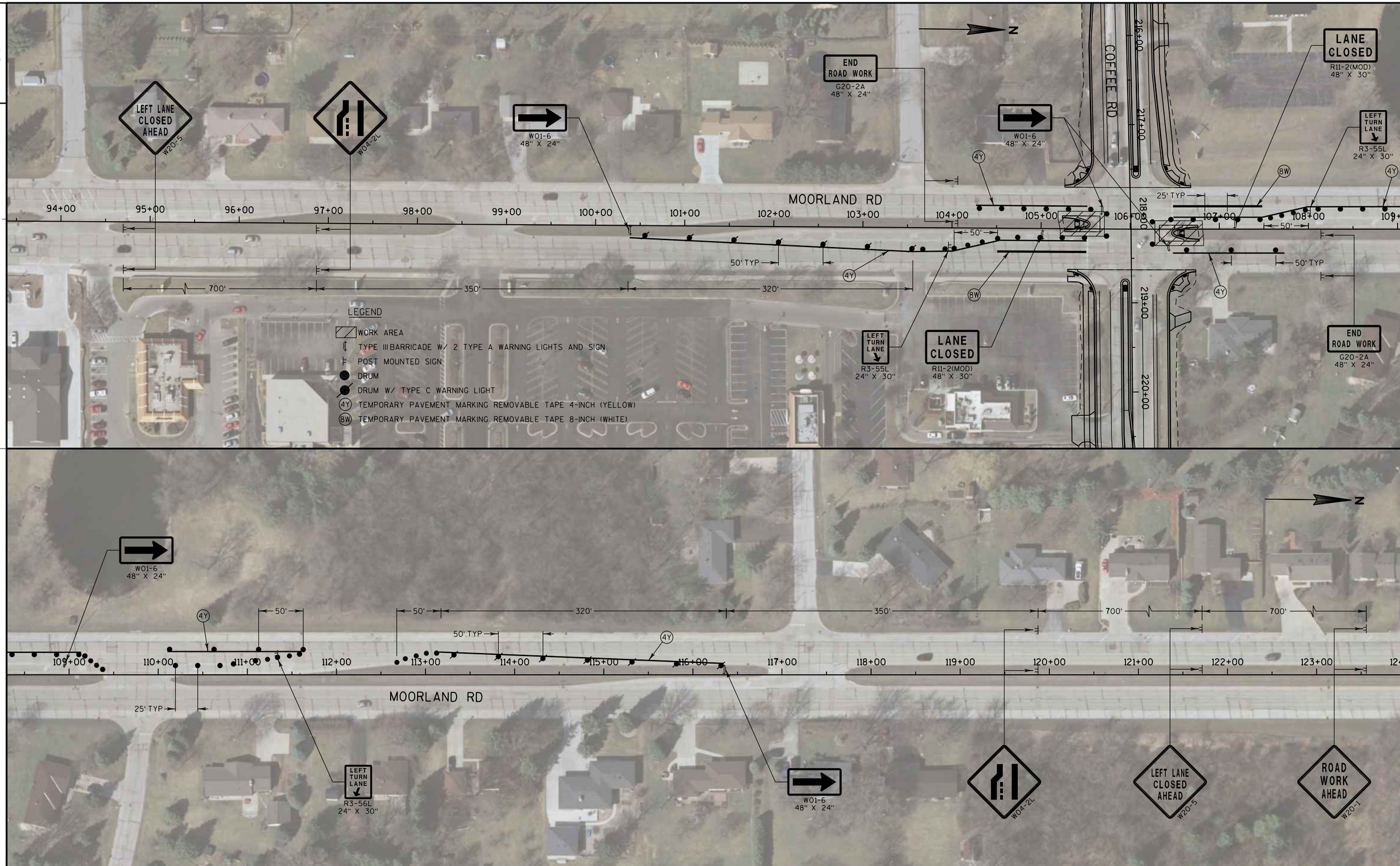

PROJECT NO: 2722-10-70	HWY: COFFEE ROAD	COUNTY: WAUKESHA	TRAFFIC CONTROL: MOORLAND ROAD	SHEET 83	E

FILE NAME : S:\Wauk_Co\NewBerlin\Gov\08.0099 Coffee Rd\Design\025101_TC.dgn PLOT DATE : 10/30/2013 PLOT BY : Nick_B PLOT NAME : PLOT SCALE : 1:100

WISDOT/CADDS SHEET 42

2

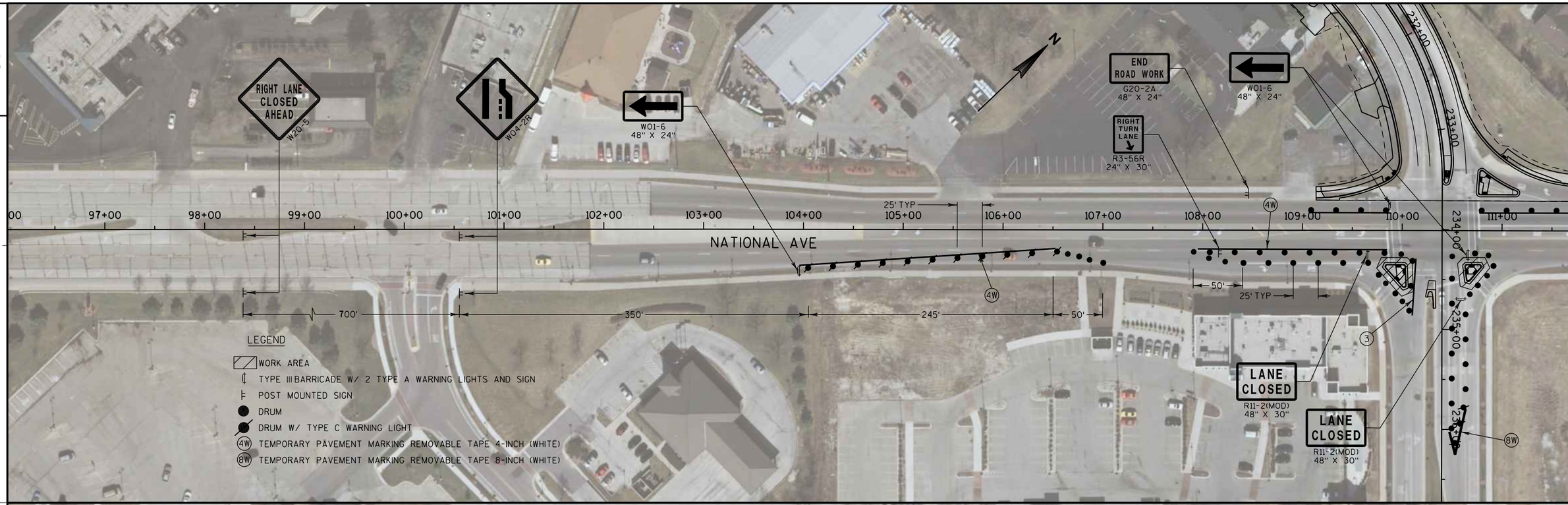

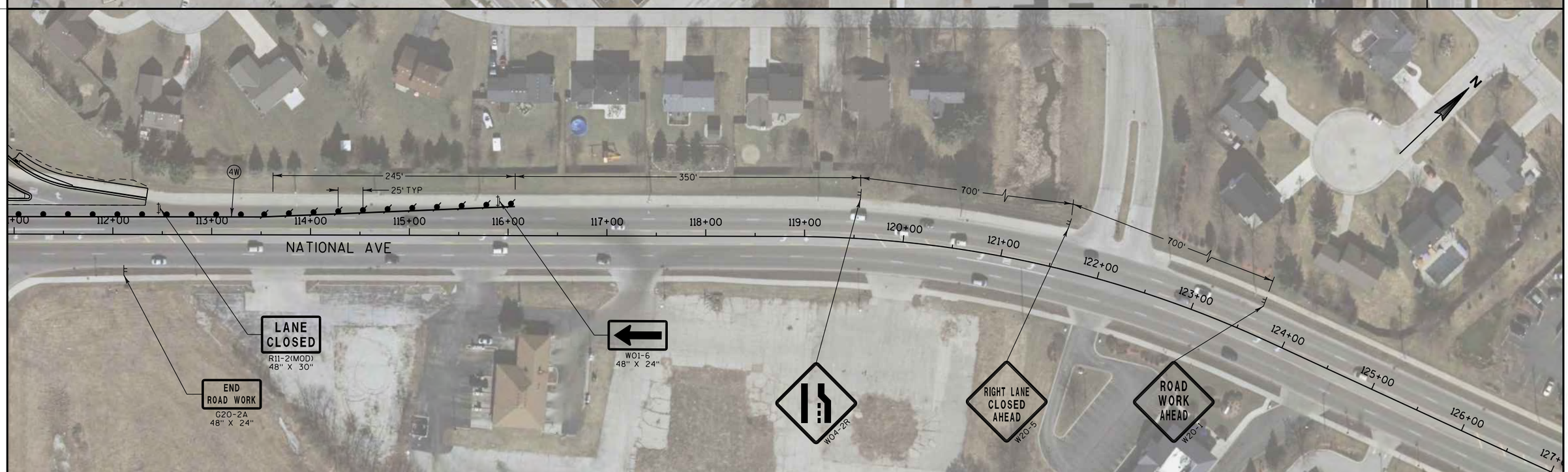

PROJECT NO: 2722-10-70	HWY: COFFEE ROAD	COUNTY: WAUKESHA	TRAFFIC CONTROL: NATIONAL AVE	SHEET 84	E

FILE NAME : S:\Wauk_Co\NewBerlin\Gov\08.0099 Coffee Rd\Design\025102_TC.dgn PLOT DATE : 10/30/2013 PLOT BY : Nick_B PLOT NAME : PLOT SCALE : 1:100

WISDOT/CADDS SHEET 42

2

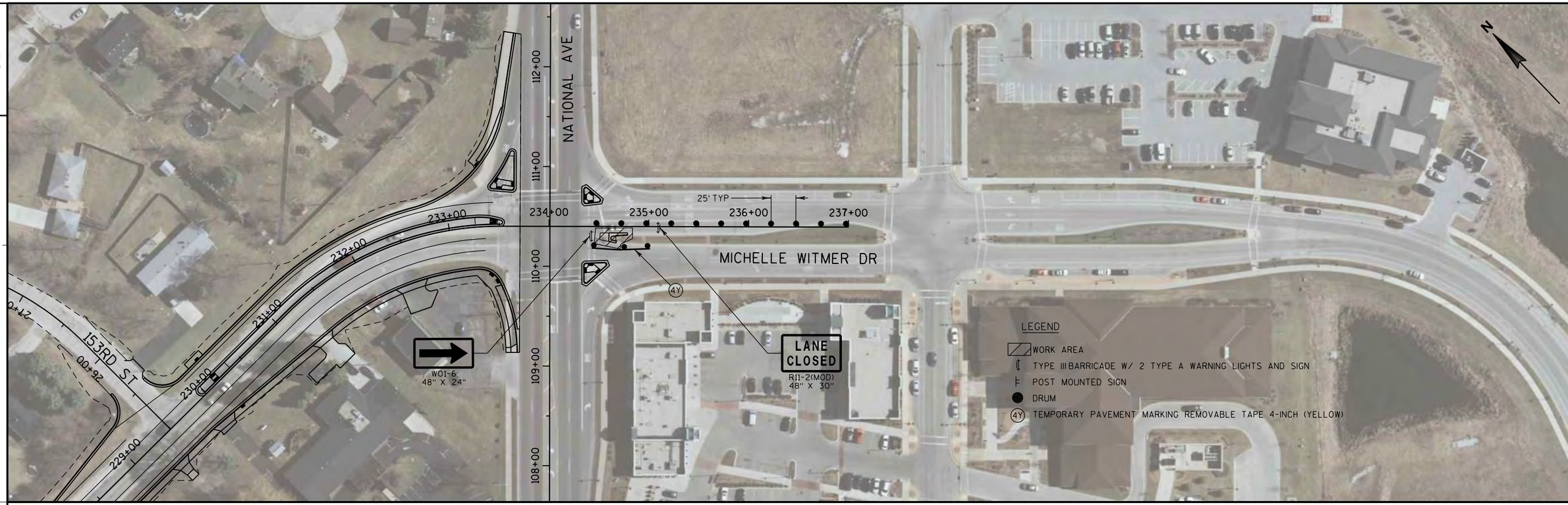

2

PROJECT NO: 2722-10-70	HWY: COFFEE ROAD	COUNTY: WAUKESHA	TRAFFIC CONTROL: MICHELLE WITMER DRIVE	SHEET 85	E

FILE NAME : S:\Wauk_Co\NewBerlin\Gov\08.0099 Coffee Rd\Design\025103_TC.dgn PLOT DATE : 10/30/2013 PLOT BY : Nick_B PLOT NAME : PLOT SCALE : 1:100

WISDOT/CADDS SHEET 42

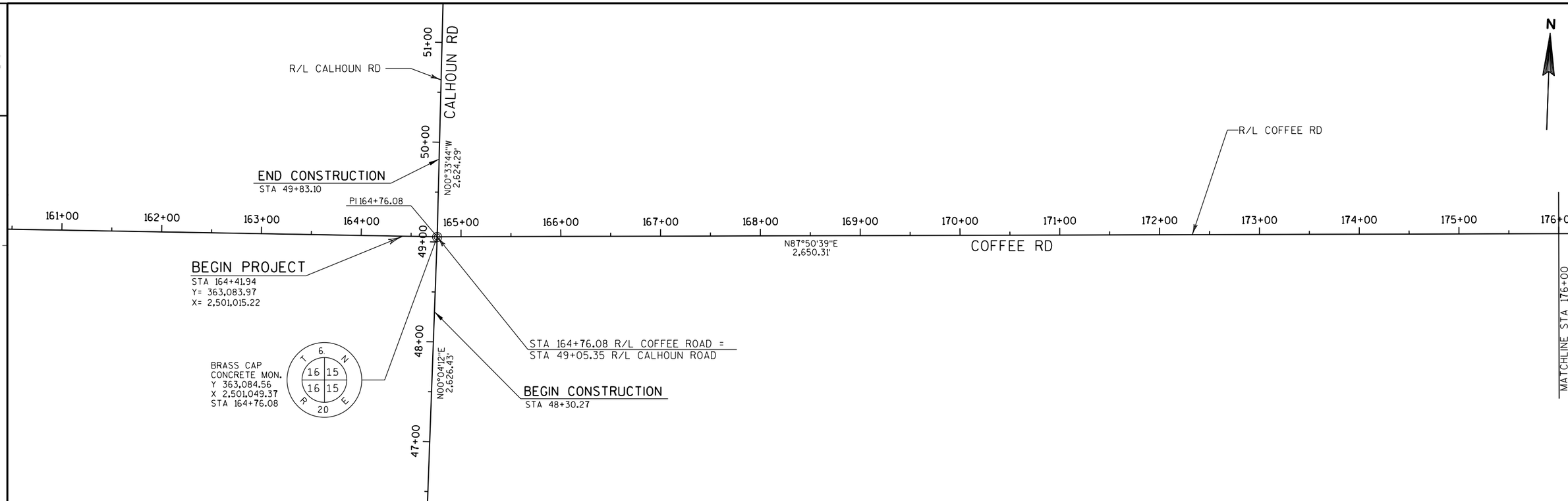

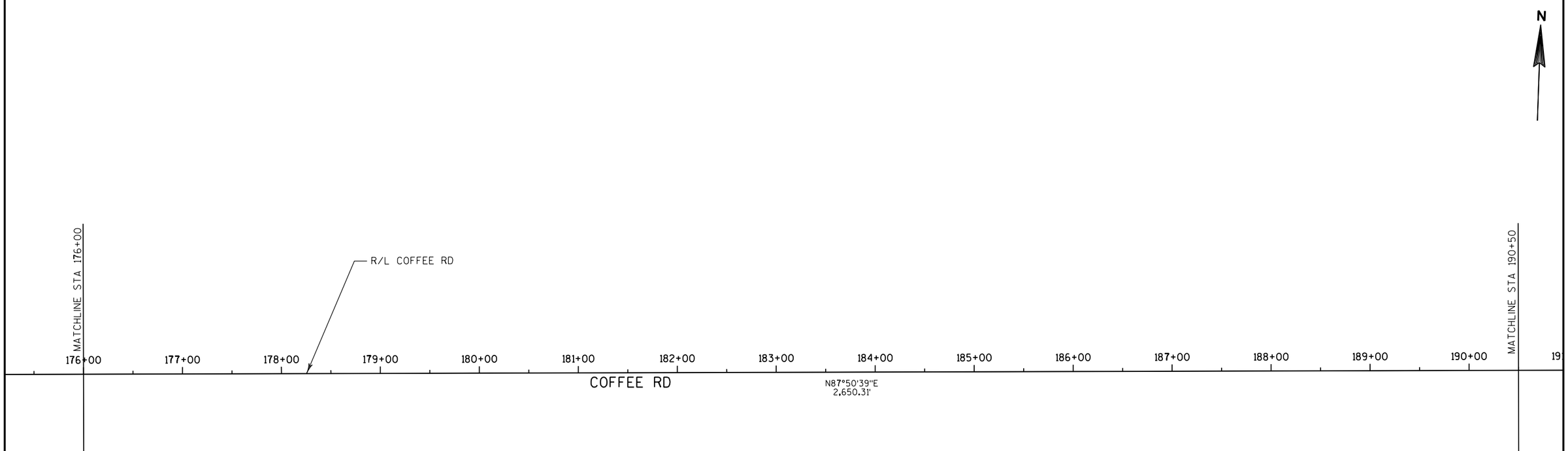

PROJECT NO: 2722-10-70	HWY: COFFEE ROAD	COUNTY: WAUKESHA	ALIGNMENT PLAN	SHEET 86	E

FILE NAME : S:\Wauk_Co\NewBerlin\Gov\08.0099 Coffee Rd\Design\027201_AD.DGN PLOT DATE : 10/30/2013 PLOT BY : Nick_B PLOT NAME : PLOT SCALE : 1:100

WISDOT/CADDS SHEET 42

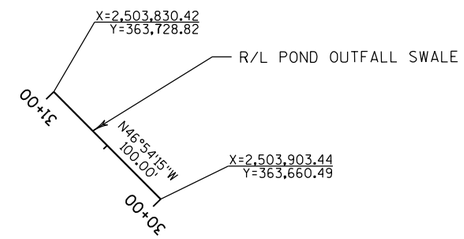

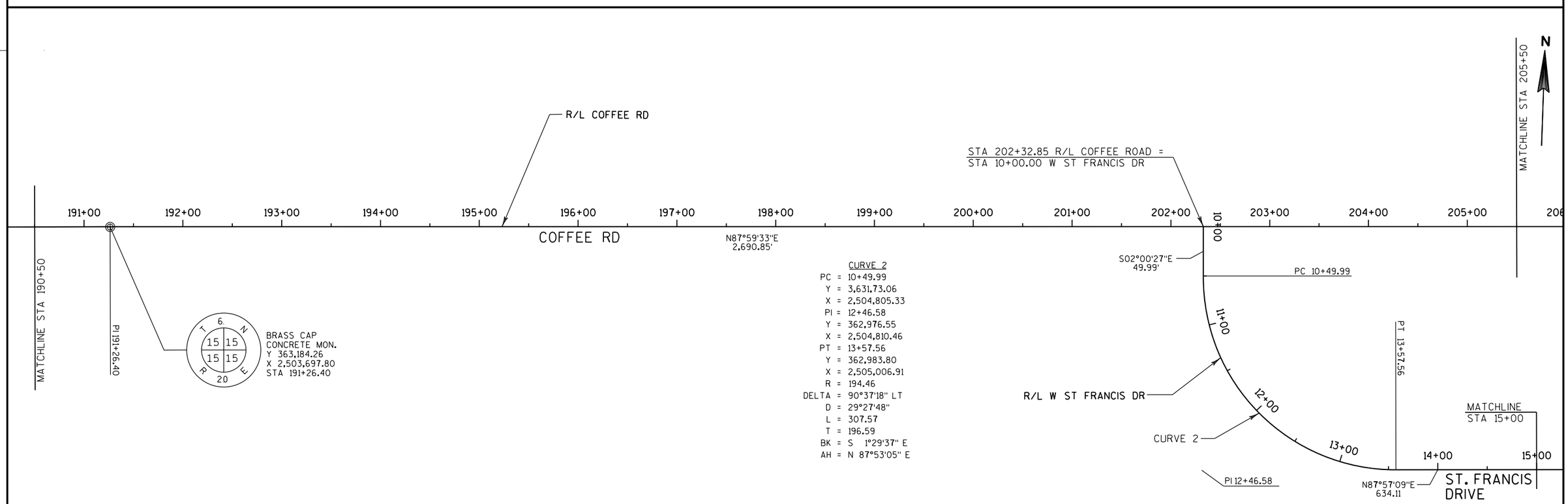

CURVE 2

PC =	10+49.99
Y =	3,631,73.06
X =	2,504,805.33
PI =	12+46.58
Y =	362,976.55
X =	2,504,810.46
PT =	13+57.56
Y =	362,983.80
X =	2,505,006.91
R =	194.46
DELTA =	90°37'18" LT
D =	29°27'48"
L =	307.57
T =	196.59
BK =	S 1°29'37" E
AH =	N 87°53'05" E

PROJECT NO: 2722-10-70	HWY: COFFEE ROAD	COUNTY: WAUKESHA	ALIGNMENT PLAN	SHEET 87	E

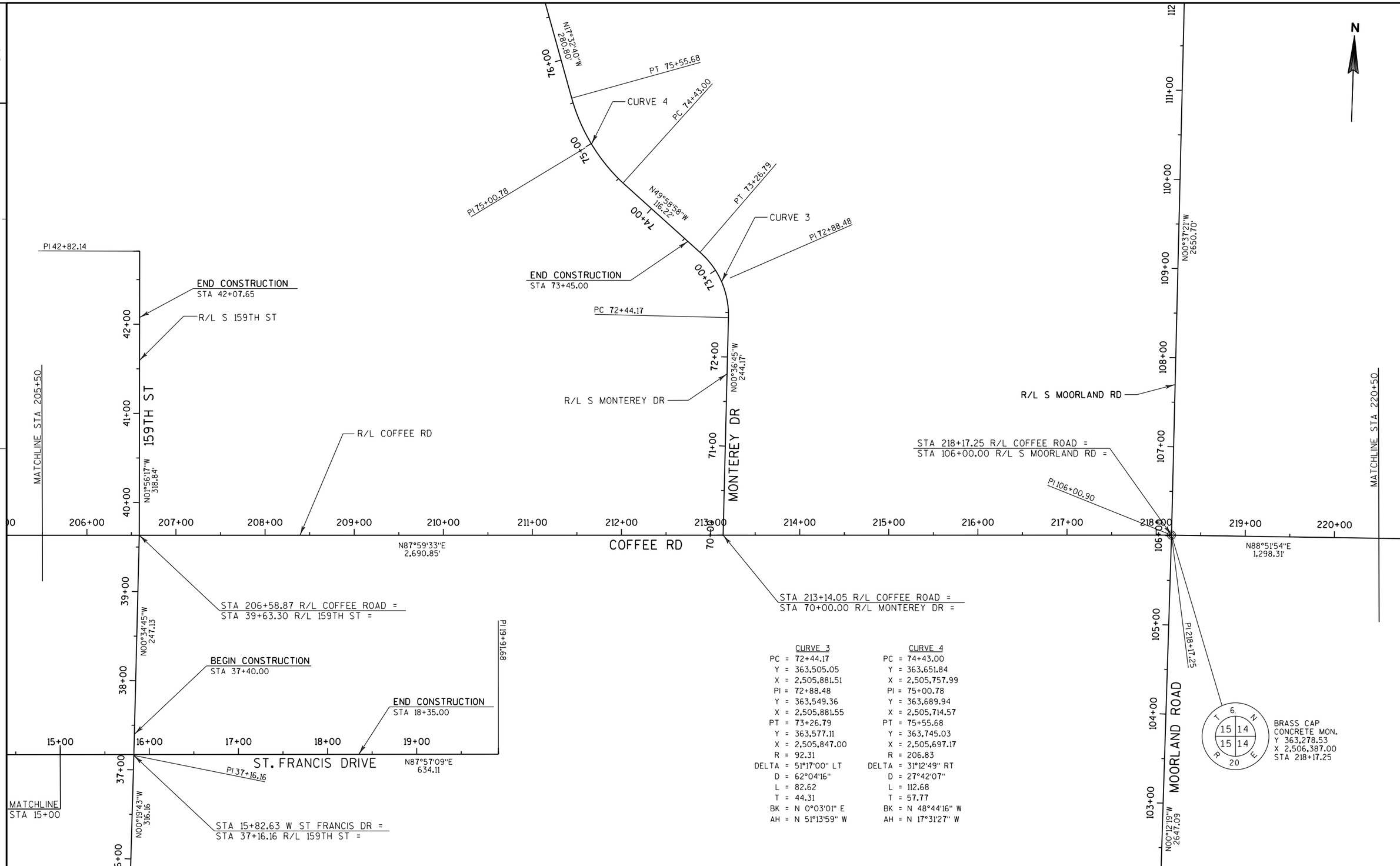

CURVE 3		CURVE 4	
PC =	72+44.17	PC =	74+43.00
Y =	363,505.05	Y =	363,651.84
X =	2,505,881.51	X =	2,505,757.99
PI =	72+88.48	PI =	75+00.78
Y =	363,549.36	Y =	363,689.94
X =	2,505,881.55	X =	2,505,714.57
PT =	73+26.79	PT =	75+55.68
Y =	363,577.11	Y =	363,745.03
X =	2,505,847.00	X =	2,505,697.17
R =	92.31	R =	206.83
DELTA =	51°17'00" LT	DELTA =	31°12'49" RT
D =	62°04'16"	D =	27°42'07"
L =	82.62	L =	112.68
T =	44.31	T =	57.77
BK =	N 0°03'01" E	BK =	N 48°44'16" W
AH =	N 51°13'59" W	AH =	N 17°31'27" W

PROJECT NO: 2722-10-70	HWY: COFFEE ROAD	COUNTY: WAUKESHA	ALIGNMENT PLAN	SHEET 88	E

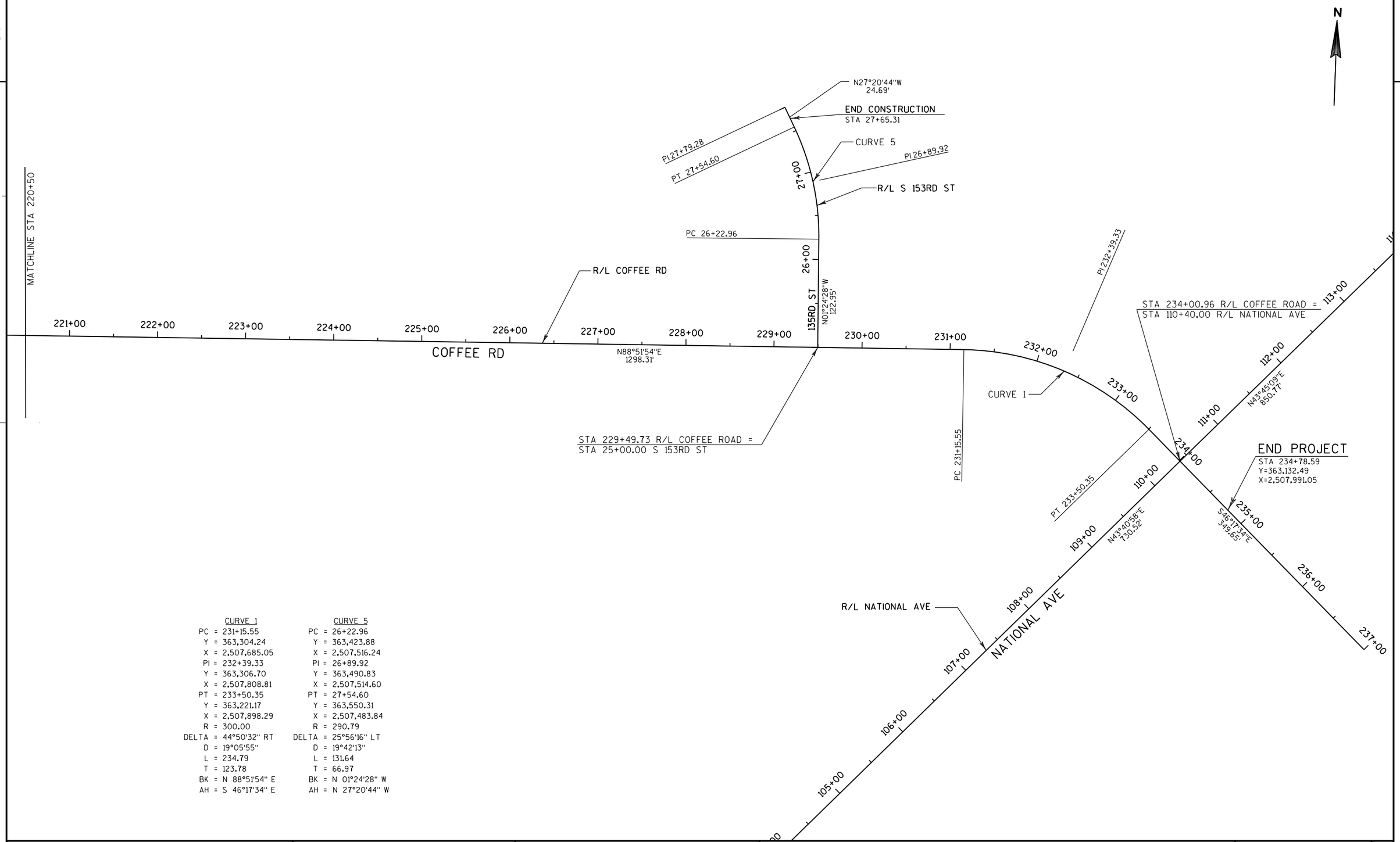

CURVE 1		CURVE 5	
PC =	231+15.55	PC =	26+22.96
Y =	363,304.24	Y =	363,423.88
X =	2,507,685.05	X =	2,507,516.24
PI =	232+39.33	PI =	26+89.92
Y =	363,306.70	Y =	363,490.83
X =	2,507,808.81	X =	2,507,514.60
PT =	233+50.35	PT =	27+54.60
Y =	363,221.17	Y =	363,550.31
X =	2,507,898.29	X =	2,507,483.84
R =	300.00	R =	290.79
DELTA =	44°50'32" RT	DELTA =	25°56'16" LT
D =	19°05'55"	D =	19°42'13"
L =	234.79	L =	131.64
T =	123.78	T =	66.97
BK =	N 88°51'54" E	BK =	N 01°24'28" W
AH =	S 46°17'34" E	AH =	N 27°20'44" W

PROJECT NO: 2722-10-70	HWY: COFFEE ROAD	COUNTY: WAUKESHA	ALIGNMENT PLAN	SHEET 89	E

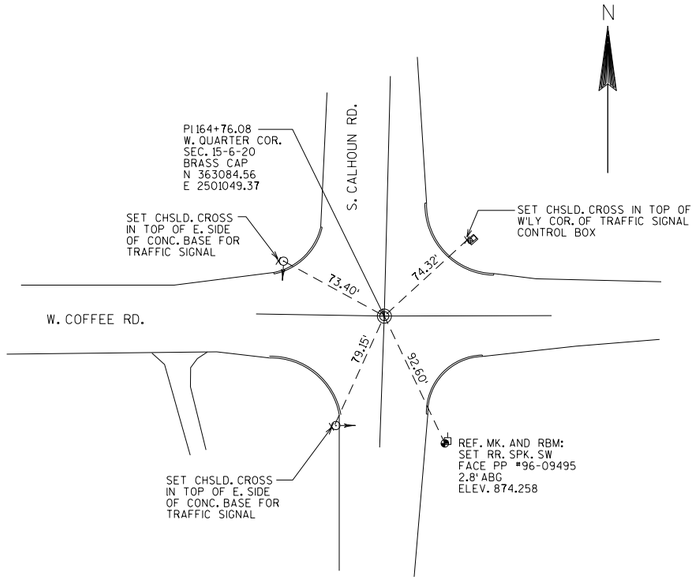

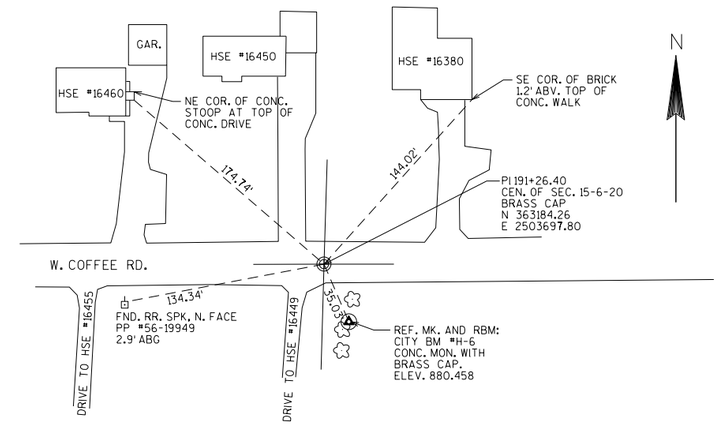

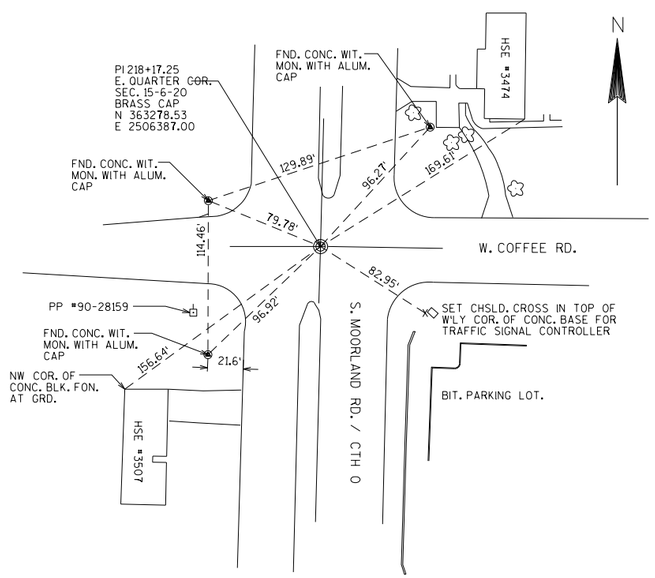

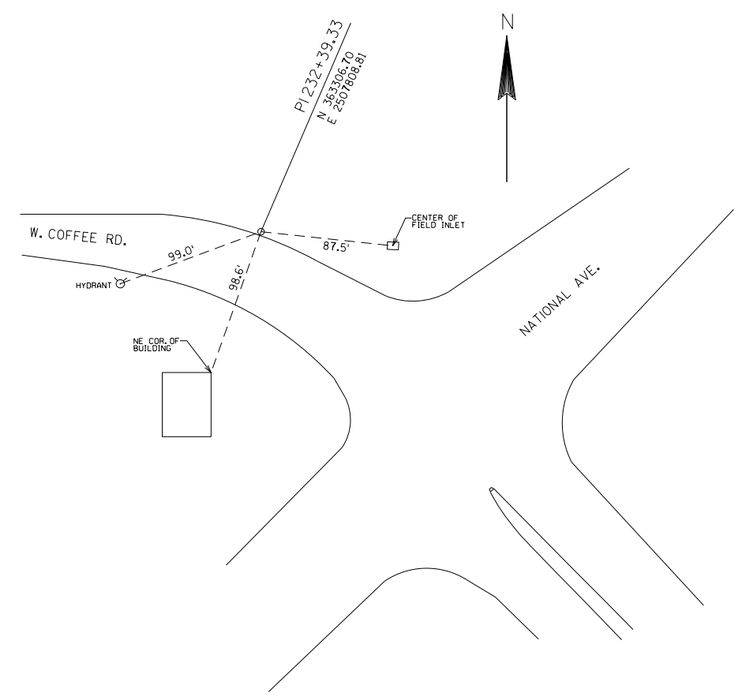

PROJECT NO: 2722-10-70	HWY: COFFEE ROAD	COUNTY: WAUKESHA	ALIGNMENT PLAN	SHEET 90	E

3

DATE 21NOV13 E S T I M A T E O F Q U A N T I T I E S

LINE NUMBER	ITEM	ITEM DESCRIPTION	UNIT	TOTAL	2722-10-70 QUANTITY
0010	201.0105	CLEARING	STA	48.000	48.000
0020	201.0205	GRUBBING	STA	48.000	48.000
0030	203.0100	REMOVING SMALL PIPE CULVERTS	EACH	40.000	40.000
0040	204.0100	REMOVING PAVEMENT	SY	929.000	929.000
0050	204.0120	REMOVING ASPHALTIC SURFACE MILLING	SY	1,401.000	1,401.000
0060	204.0150	REMOVING CURB & GUTTER	LF	860.000	860.000
0070	204.0155	REMOVING CONCRETE SIDEWALK	SY	332.000	332.000
0080	204.0180	REMOVING DELINEATORS AND MARKERS	EACH	18.000	18.000
0090	204.0195	REMOVING CONCRETE BASES	EACH	13.000	13.000
0100	204.0210	REMOVING MANHOLES	EACH	2.000	2.000
0110	204.0220	REMOVING INLETS	EACH	8.000	8.000
0120	204.0245	REMOVING STORM SEWER (SIZE) 01. 12-INCH	LF	442.000	442.000
0130	204.0245	REMOVING STORM SEWER (SIZE) 02. 18-INCH	LF	82.000	82.000
0140	204.0270	ABANDONING CULVERT PIPES	EACH	2.000	2.000
0150	205.0100	EXCAVATION COMMON	CY	52,021.000	52,021.000
0160	205.0400	EXCAVATION MARSH	CY	1,000.000	1,000.000
0170	209.0100	BACKFILL GRANULAR	CY	9,750.000	9,750.000
0180	213.0100	FINISHING ROADWAY (PROJECT) 01. 2722-10-70	EACH	1.000	1.000
0190	305.0110	BASE AGGREGATE DENSE 3/4-INCH	TON	1,220.000	1,220.000
0200	305.0120	BASE AGGREGATE DENSE 1 1/4-INCH	TON	36,462.000	36,462.000
0210	312.0110	SELECT CRUSHED MATERIAL	TON	23,405.000	23,405.000
0220	415.0090	CONCRETE PAVEMENT 9-INCH	SY	72.000	72.000
0230	416.0270	CONCRETE DRIVEWAY HES 7-INCH	SY	464.000	464.000
0240	416.0610	DRILLED TIE BARS	EACH	56.000	56.000
0250	440.4410.S	INCENTIVE IRI RIDE	DOL	5,838.000	5,838.000
0260	455.0115	ASPHALTIC MATERIAL PG64-22	TON	313.000	313.000
0270	455.0120	ASPHALTIC MATERIAL PG64-28	TON	251.000	251.000
0280	455.0605	TACK COAT	GAL	1,970.000	1,970.000
0290	460.1101	HMA PAVEMENT TYPE E-1	TON	10,260.000	10,260.000
0300	460.2000	INCENTIVE DENSITY HMA PAVEMENT	DOL	6,650.000	6,650.000
0310	465.0120	ASPHALTIC SURFACE DRIVEWAYS AND FIELD ENTRANCES	TON	177.000	177.000
0320	465.0315	ASPHALTIC FLUMES	SY	28.000	28.000
0330	520.0112	CULVERT PIPE CLASS III 12-INCH	LF	173.000	173.000
0340	520.0115	CULVERT PIPE CLASS III 15-INCH	LF	31.000	31.000
0350	520.0118	CULVERT PIPE CLASS III 18-INCH	LF	513.000	513.000
0360	520.1012	APRON ENDWALLS FOR CULVERT PIPE 12-INCH	EACH	8.000	8.000
0370	520.1015	APRON ENDWALLS FOR CULVERT PIPE 15-INCH	EACH	2.000	2.000
0380	520.1018	APRON ENDWALLS FOR CULVERT PIPE 18-INCH	EACH	24.000	24.000
0390	520.8000	CONCRETE COLLARS FOR PIPE	EACH	8.000	8.000
0400	522.1018	APRON ENDWALLS FOR CULVERT PIPE REINFORCED CONCRETE 18-INCH	EACH	1.000	1.000
0410	522.1024	APRON ENDWALLS FOR CULVERT PIPE REINFORCED CONCRETE 24-INCH	EACH	1.000	1.000
0420	522.1030	APRON ENDWALLS FOR CULVERT PIPE REINFORCED CONCRETE 30-INCH	EACH	1.000	1.000
0430	522.1048	APRON ENDWALLS FOR CULVERT PIPE REINFORCED CONCRETE 48-INCH	EACH	1.000	1.000
0440	523.0424	CULVERT PIPE REINFORCED CONCRETE HORIZONTAL ELLIPTICAL CLASS HE-IV 24X38-INCH	LF	126.000	126.000
0450	523.0429	CULVERT PIPE REINFORCED CONCRETE HORIZONTAL ELLIPTICAL CLASS HE-IV 29X45-INCH	LF	128.000	128.000

3

3

DATE 21NOV13 E S T I M A T E O F Q U A N T I T I E S

LINE NUMBER	ITEM	ITEM DESCRIPTION	UNIT	TOTAL	2722-10-70 QUANTITY
0460	523.0524	APRON ENDWALLS FOR CULVERT PIPE REINFORCED CONCRETE HORIZONTAL ELLIPTICAL 24X38-INCH	EACH	4.000	4.000
0470	523.0529	APRON ENDWALLS FOR CULVERT PIPE REINFORCED CONCRETE HORIZONTAL ELLIPTICAL 29X45-INCH	EACH	4.000	4.000
0480	601.0409	CONCRETE CURB & GUTTER 30-INCH TYPE A	LF	93.000	93.000
0490	601.0411	CONCRETE CURB & GUTTER 30-INCH TYPE D	LF	11,054.000	11,054.000
0500	602.0410	CONCRETE SIDEWALK 5-INCH	SF	16,333.000	16,333.000
0510	602.0505	CURB RAMP DETECTABLE WARNING FIELD YELLOW	SF	328.000	328.000
0520	606.0200	RIPRAP MEDIUM	CY	632.000	632.000
0530	608.0312	STORM SEWER PIPE REINFORCED CONCRETE CLASS III 12-INCH	LF	969.000	969.000
0540	608.0315	STORM SEWER PIPE REINFORCED CONCRETE CLASS III 15-INCH	LF	902.000	902.000
0550	608.0318	STORM SEWER PIPE REINFORCED CONCRETE CLASS III 18-INCH	LF	543.000	543.000
0560	608.0324	STORM SEWER PIPE REINFORCED CONCRETE CLASS III 24-INCH	LF	1,123.000	1,123.000
0570	608.0330	STORM SEWER PIPE REINFORCED CONCRETE CLASS III 30-INCH	LF	250.000	250.000
0580	608.0342	STORM SEWER PIPE REINFORCED CONCRETE CLASS III 42-INCH	LF	248.000	248.000
0590	608.0348	STORM SEWER PIPE REINFORCED CONCRETE CLASS III 48-INCH	LF	1,257.000	1,257.000
0600	611.0420	RECONSTRUCTING MANHOLES	EACH	3.000	3.000
0610	611.0530	MANHOLE COVERS TYPE J	EACH	14.000	14.000
0620	611.0612	INLET COVERS TYPE C	EACH	3.000	3.000
0630	611.0642	INLET COVERS TYPE MS	EACH	8.000	8.000
0640	611.0660	INLET COVERS TYPE WM	EACH	44.000	44.000
0650	611.1004	CATCH BASINS 4-FT DIAMETER	EACH	42.000	42.000
0660	611.2004	MANHOLES 4-FT DIAMETER	EACH	3.000	3.000
0670	611.2005	MANHOLES 5-FT DIAMETER	EACH	5.000	5.000
0680	611.2008	MANHOLES 8-FT DIAMETER	EACH	1.000	1.000
0690	611.2066	MANHOLES 6X6-FT	EACH	8.000	8.000
0700	611.3901	INLETS MEDIAN 1 GRATE	EACH	8.000	8.000
0710	611.8120.S	COVER PLATES TEMPORARY	EACH	25.000	25.000
0720	611.9800.S	PIPE GRATES	EACH	1.000	1.000
0730	612.0204	PIPE UNDERDRAIN UNPERFORATED 4-INCH	LF	200.000	200.000
0740	612.0406	PIPE UNDERDRAIN WRAPPED 6-INCH	LF	250.000	250.000
0750	612.0700	DRAIN TILE EXPLORATION	LF	1,000.000	1,000.000
0760	612.0902.S	INSULATION BOARD POLYSTYRENE (INCH) 01. 2-INCH	SY	127.000	127.000
0770	619.1000	MOBILIZATION	EACH	1.000	1.000
0780	620.0300	CONCRETE MEDIAN SLOPED NOSE	SF	800.000	800.000
0790	624.0100	WATER	MGAL	359.000	359.000
0800	625.0500	SALVAGED TOPSOIL	SY	61,858.000	61,858.000
0810	627.0200	MULCHING	SY	52,216.000	52,216.000
0820	628.1104	EROSION BALES	EACH	1,110.000	1,110.000
0830	628.1504	SILT FENCE	LF	9,991.000	9,991.000
0840	628.1520	SILT FENCE MAINTENANCE	LF	9,991.000	9,991.000
0850	628.1905	MOBILIZATIONS EROSION CONTROL	EACH	1.000	1.000
0860	628.1910	MOBILIZATIONS EMERGENCY EROSION CONTROL	EACH	2.000	2.000
0870	628.6510	SOIL STABILIZER TYPE B	ACRE	2.500	2.500
0880	628.7005	INLET PROTECTION TYPE A	EACH	9.000	9.000

3

DATE 21NOV13 E S T I M A T E O F Q U A N T I T I E S

LINE NUMBER	ITEM	ITEM DESCRIPTION	UNIT	TOTAL	2722-10-70 QUANTITY
0890	628.7015	INLET PROTECTION TYPE C	EACH	53.000	53.000
0900	628.7504	TEMPORARY DITCH CHECKS	LF	165.000	165.000
0910	628.7555	CULVERT PIPE CHECKS	EACH	105.000	105.000
0920	628.7570	ROCK BAGS	EACH	10.000	10.000
0930	629.0205	FERTILIZER TYPE A	CWT	6.000	6.000
0940	629.0210	FERTILIZER TYPE B	CWT	33.000	33.000
0950	630.0130	SEEDING MIXTURE NO. 30	LB	655.000	655.000
0960	630.0175	SEEDING MIXTURE NO. 75	LB	230.000	230.000
0970	630.0200	SEEDING TEMPORARY	LB	449.000	449.000
0980	631.0300	SOD WATER	MGAL	153.000	153.000
0990	631.1100	SOD EROSION CONTROL	SY	6,792.000	6,792.000
1000	632.0101	TREES (SPECIES, ROOT, SIZE) 01. SPRUCE BLACK HILLS B&B, 6-FT HT	EACH	24.000	24.000
1010	632.0101	TREES (SPECIES, ROOT, SIZE) 02. PINE WHITE, B&B, 6-FT HT	EACH	14.000	14.000
1020	632.9101	LANDSCAPE PLANTING SURVEILLANCE AND CARE CYCLES	EACH	26.000	26.000
1030	633.5200	MARKERS CULVERT END	EACH	9.000	9.000
1040	634.0612	POSTS WOOD 4X6-INCH X 12-FT	EACH	2.000	2.000
1050	634.0614	POSTS WOOD 4X6-INCH X 14-FT	EACH	27.000	27.000
1060	634.0616	POSTS WOOD 4X6-INCH X 16-FT	EACH	7.000	7.000
1070	637.2210	SIGNS TYPE II REFLECTIVE H	SF	204.320	204.320
1080	637.2215	SIGNS TYPE II REFLECTIVE H FOLDING	SF	88.060	88.060
1090	637.2230	SIGNS TYPE II REFLECTIVE F	SF	48.000	48.000
1100	638.2602	REMOVING SIGNS TYPE II	EACH	57.000	57.000
1110	638.3000	REMOVING SMALL SIGN SUPPORTS	EACH	35.000	35.000
1120	642.5201	FIELD OFFICE TYPE C	EACH	1.000	1.000
1130	643.0100	TRAFFIC CONTROL (PROJECT) 01. 2722-10-70	EACH	1.000	1.000
1140	643.0300	TRAFFIC CONTROL DRUMS	DAY	3,819.000	3,819.000
1150	643.0420	TRAFFIC CONTROL BARRICADES TYPE III	DAY	5,555.000	5,555.000
1160	643.0705	TRAFFIC CONTROL WARNING LIGHTS TYPE A	DAY	11,110.000	11,110.000
1170	643.0715	TRAFFIC CONTROL WARNING LIGHTS TYPE C	DAY	894.000	894.000
1180	643.0900	TRAFFIC CONTROL SIGNS	DAY	4,711.000	4,711.000
1190	643.1000	TRAFFIC CONTROL SIGNS FIXED MESSAGE	SF	175.000	175.000
1200	645.0120	GEOTEXTILE FABRIC TYPE HR	SY	1,034.000	1,034.000
1210	645.0135	GEOTEXTILE FABRIC TYPE SR	SY	1,500.000	1,500.000
1220	646.0106	PAVEMENT MARKING EPOXY 4-INCH	LF	29,643.000	29,643.000
1230	646.0126	PAVEMENT MARKING EPOXY 8-INCH	LF	3,732.000	3,732.000
1240	646.0600	REMOVING PAVEMENT MARKINGS	LF	2,060.000	2,060.000
1250	647.0166	PAVEMENT MARKING ARROWS EPOXY TYPE 2	EACH	37.000	37.000
1260	647.0176	PAVEMENT MARKING ARROWS EPOXY TYPE 3	EACH	2.000	2.000
1270	647.0206	PAVEMENT MARKING ARROWS BIKE LANE EPOXY	EACH	38.000	38.000
1280	647.0306	PAVEMENT MARKING SYMBOLS BIKE LANE EPOXY	EACH	38.000	38.000
1290	647.0356	PAVEMENT MARKING WORDS EPOXY	EACH	19.000	19.000
1300	647.0456	PAVEMENT MARKING CURB EPOXY	LF	235.000	235.000
1310	647.0526	PAVEMENT MARKING YIELD LINE SYMBOLS EPOXY 18-INCH	EACH	20.000	20.000
1320	647.0566	PAVEMENT MARKING STOP LINE EPOXY 18-INCH	LF	553.000	553.000
1330	647.0606	PAVEMENT MARKING ISLAND NOSE EPOXY	EACH	11.000	11.000
1340	647.0726	PAVEMENT MARKING DIAGONAL EPOXY 12-INCH	LF	322.000	322.000
1350	647.0766	PAVEMENT MARKING CROSSWALK EPOXY 6-INCH	LF	1,465.000	1,465.000
1360	647.0955	REMOVING PAVEMENT MARKINGS ARROWS	EACH	8.000	8.000
1370	647.0965	REMOVING PAVEMENT MARKINGS WORDS	EACH	7.000	7.000

3

DATE 21NOV13 E S T I M A T E O F Q U A N T I T I E S

LINE NUMBER	ITEM	ITEM DESCRIPTION	UNIT	TOTAL	2722-10-70 QUANTITY
1380	649.0400	TEMPORARY PAVEMENT MARKING REMOVABLE TAPE 4-INCH	LF	6,108.000	6,108.000
1390	649.0801	TEMPORARY PAVEMENT MARKING REMOVABLE TAPE 8-INCH	LF	270.000	270.000
1400	649.1200	TEMPORARY PAVEMENT MARKING STOP LINE REMOVABLE TAPE 18-INCH	LF	36.000	36.000
1410	650.4000	CONSTRUCTION STAKING STORM SEWER	EACH	74.000	74.000
1420	650.4500	CONSTRUCTION STAKING SUBGRADE	LF	7,965.000	7,965.000
1430	650.5000	CONSTRUCTION STAKING BASE	LF	7,965.000	7,965.000
1440	650.5500	CONSTRUCTION STAKING CURB GUTTER AND CURB & GUTTER	LF	11,147.000	11,147.000
1450	650.6000	CONSTRUCTION STAKING PIPE CULVERTS	EACH	21.000	21.000
1460	650.8500	CONSTRUCTION STAKING ELECTRICAL INSTALLATIONS (PROJECT) 01. 2722-10-70	LS	1.000	1.000
1470	650.9910	CONSTRUCTION STAKING SUPPLEMENTAL CONTROL (PROJECT) 01. 2722-10-70	LS	1.000	1.000
1480	650.9920	CONSTRUCTION STAKING SLOPE STAKES	LF	7,965.000	7,965.000
1490	652.0225	CONDUIT RIGID NONMETALLIC SCHEDULE 40 2-INCH	LF	2,865.000	2,865.000
1500	652.0235	CONDUIT RIGID NONMETALLIC SCHEDULE 40 3-INCH	LF	1,810.000	1,810.000
1510	652.0615	CONDUIT SPECIAL 3-INCH	LF	610.000	610.000
1520	652.0800	CONDUIT LOOP DETECTOR	LF	374.000	374.000
1530	653.0135	PULL BOXES STEEL 24X36-INCH	EACH	4.000	4.000
1540	653.0140	PULL BOXES STEEL 24X42-INCH	EACH	21.000	21.000
1550	653.0905	REMOVING PULL BOXES	EACH	27.000	27.000
1560	654.0101	CONCRETE BASES TYPE 1	EACH	13.000	13.000
1570	654.0102	CONCRETE BASES TYPE 2	EACH	8.000	8.000
1580	654.0217	CONCRETE CONTROL CABINET BASES TYPE 9 SPECIAL	EACH	3.000	3.000
1590	655.0220	CABLE TRAFFIC SIGNAL 4-14 AWG	LF	320.000	320.000
1600	655.0230	CABLE TRAFFIC SIGNAL 5-14 AWG	LF	670.000	670.000
1610	655.0240	CABLE TRAFFIC SIGNAL 7-14 AWG	LF	1,110.000	1,110.000
1620	655.0260	CABLE TRAFFIC SIGNAL 12-14 AWG	LF	4,965.000	4,965.000
1630	655.0270	CABLE TRAFFIC SIGNAL 15-14 AWG	LF	285.000	285.000
1640	655.0290	CABLE TRAFFIC SIGNAL 21-14 AWG	LF	505.000	505.000
1650	655.0305	CABLE TYPE UF 2-12 AWG GROUNDED	LF	2,290.000	2,290.000
1660	655.0515	ELECTRICAL WIRE TRAFFIC SIGNALS 10 AWG	LF	4,340.000	4,340.000
1670	655.0610	ELECTRICAL WIRE LIGHTING 12 AWG	LF	3,940.000	3,940.000
1680	655.0625	ELECTRICAL WIRE LIGHTING 6 AWG	LF	10,272.000	10,272.000
1690	655.0700	LOOP DETECTOR LEAD IN CABLE	LF	3,275.000	3,275.000
1700	655.0800	LOOP DETECTOR WIRE	LF	1,292.000	1,292.000
1710	656.0200	ELECTRICAL SERVICE METER BREAKER PEDESTAL (LOCATION) 01. COFFEE ROAD AND CTH O (MOORLAND RD)	LS	1.000	1.000
1720	656.0200	ELECTRICAL SERVICE METER BREAKER PEDESTAL (LOCATION) 02. COFFEE ROAD AND NATIONAL AVENUE	LS	1.000	1.000
1730	656.0200	ELECTRICAL SERVICE METER BREAKER PEDESTAL (LOCATION) 03. COFFEE ROAD AND CALHOUN ROAD	LS	1.000	1.000
1740	657.0100	PEDESTAL BASES	EACH	12.000	12.000
1750	657.0255	TRANSFORMER BASES BREAKAWAY 11 1/2-INCH BOLT CIRCLE	EACH	9.000	9.000
1760	657.0310	POLES TYPE 3	EACH	4.000	4.000
1770	657.0315	POLES TYPE 4	EACH	5.000	5.000

3

DATE 21NOV13 E S T I M A T E O F Q U A N T I T I E S

LINE NUMBER	ITEM	ITEM DESCRIPTION	UNIT	TOTAL	2722-10-70 QUANTITY
1780	657.0425	TRAFFIC SIGNAL STANDARDS ALUMINUM 15-FT	EACH	8.000	8.000
1790	657.0430	TRAFFIC SIGNAL STANDARDS ALUMINUM 10-FT	EACH	4.000	4.000
1800	657.0590	TROMBONE ARMS 20-FT	EACH	2.000	2.000
1810	657.0595	TROMBONE ARMS 25-FT	EACH	2.000	2.000
1820	657.0614	LUMINAIRE ARMS SINGLE MEMBER 4-INCH CLAMP 8-FT	EACH	13.000	13.000
1830	658.0110	TRAFFIC SIGNAL FACE 3-12 INCH VERTICAL	EACH	27.000	27.000
1840	658.0115	TRAFFIC SIGNAL FACE 4-12 INCH VERTICAL	EACH	4.000	4.000
1850	658.0120	TRAFFIC SIGNAL FACE 5-12 INCH VERTICAL	EACH	6.000	6.000
1860	658.0155	TRAFFIC SIGNAL FACE 3-12 INCH HORIZONTAL	EACH	1.000	1.000
1870	658.0165	TRAFFIC SIGNAL FACE 5-12 INCH HORIZONTAL	EACH	4.000	4.000
1880	658.0215	BACKPLATES SIGNAL FACE 3 SECTION 12-INCH	EACH	28.000	28.000
1890	658.0220	BACKPLATES SIGNAL FACE 4 SECTION 12-INCH	EACH	4.000	4.000
1900	658.0225	BACKPLATES SIGNAL FACE 5 SECTION 12-INCH	EACH	10.000	10.000
1910	658.0416	PEDESTRIAN SIGNAL FACE 16-INCH	EACH	16.000	16.000
1920	658.0500	PEDESTRIAN PUSH BUTTONS	EACH	12.000	12.000
1930	658.0600	LED MODULES 12-INCH RED BALL	EACH	34.000	34.000
1940	658.0605	LED MODULES 12-INCH YELLOW BALL	EACH	34.000	34.000
1950	658.0610	LED MODULES 12-INCH GREEN BALL	EACH	34.000	34.000
1960	658.0615	LED MODULES 12-INCH RED ARROW	EACH	8.000	8.000
1970	658.0620	LED MODULES 12-INCH YELLOW ARROW	EACH	26.000	26.000
1980	658.0625	LED MODULES 12-INCH GREEN ARROW	EACH	14.000	14.000
1990	658.0635	LED MODULES PEDESTRIAN COUNTDOWN TIMER 16-INCH	EACH	16.000	16.000
2000	658.5069	SIGNAL MOUNTING HARDWARE (LOCATION) 01. COFFEE ROAD AND CALHOUN ROAD	LS	1.000	1.000
2010	658.5069	SIGNAL MOUNTING HARDWARE (LOCATION) 02. COFFEE ROAD & CTH O (MOORLAND ROAD)	LS	1.000	1.000
2020	658.5069	SIGNAL MOUNTING HARDWARE (LOCATION) 03. COFFEE ROAD AND NATIONAL AVENUE	LS	1.000	1.000
2030	659.0125	LUMINAIRES UTILITY HPS 250 WATTS	EACH	13.000	13.000
2040	659.0802	PLAQUES SEQUENCE IDENTIFICATION	EACH	21.000	21.000
2050	661.0200	TEMPORARY TRAFFIC SIGNALS FOR INTERSECTIONS (LOCATION) 01. COFFEE ROAD & CTH O (MOORLAND ROAD)	LS	1.000	1.000
2060	661.0200	TEMPORARY TRAFFIC SIGNALS FOR INTERSECTIONS (LOCATION) 02. COFFEE ROAD AND NATIONAL AVENUE	LS	1.000	1.000
2070	661.0300	GENERATORS	DAY	2.000	2.000
2080	690.0150	SAWING ASPHALT	LF	1,342.000	1,342.000
2090	690.0250	SAWING CONCRETE	LF	621.000	621.000
2100	ASP.1T0A	ON-THE-JOB TRAINING APPRENTICE AT $5.00/HR	HRS	1,600.000	1,600.000
2110	ASP.1T0G	ON-THE-JOB TRAINING GRADUATE AT $5.00/HR	HRS	1,200.000	1,200.000
2120	SPV.0060	SPECIAL 01. TRAFFIC SIGNAL CONTROLLER AND CABINET 8-PHASE FULLY ACTUATED	EACH	2.000	2.000
2130	SPV.0060	SPECIAL 02. POLES TYPE 9	EACH	2.000	2.000
2140	SPV.0060	SPECIAL 03. POLES TYPE 12	EACH	2.000	2.000
2150	SPV.0060	SPECIAL 04. CONC BASES TYPE 10 CONTR SUPPLIED ANCHOR BOLTS & ANCHOR ROD TEMPLATE	EACH	2.000	2.000
2160	SPV.0060	SPECIAL 05. CONC BASES TYPE 13 CONTR SUPPLIED ANCHOR BOLTS & ANCHOR ROAD TEMPLATE	EACH	2.000	2.000
2170	SPV.0060	SPECIAL 06. MONOTUBE ARMS 25-FT	EACH	1.000	1.000
2180	SPV.0060	SPECIAL 07. MONOTUBE ARMS 30-FT	EACH	1.000	1.000

3

DATE 21NOV13 E S T I M A T E O F Q U A N T I T I E S

LINE NUMBER	ITEM	ITEM DESCRIPTION	UNIT	TOTAL	2722-10-70 QUANTITY
2190	SPV.0060	SPECIAL 08. MONOTUBE ARMS 35-FT	EACH	2.000	2.000
2200	SPV.0060	SPECIAL 09. CONCRETE BASES TYPE 5 MODIFIED	EACH	20.000	20.000
2210	SPV.0060	SPECIAL 10. DECORATIVE POLE, ARM, LUMINAIRE LED	EACH	20.000	20.000
2220	SPV.0060	SPECIAL 11. LIGHTING DISTRIBUTION CENTER 120/240V	EACH	1.000	1.000
2230	SPV.0060	SPECIAL 12. CONSTRUCTION STAKING CURB RAMP	EACH	23.000	23.000
2240	SPV.0060	SPECIAL 13. GALVANIZED TRASH RACK	EACH	1.000	1.000
2250	SPV.0060	SPECIAL 14. CHECK VALVE 24-INCH	EACH	1.000	1.000
2260	SPV.0060	SPECIAL 15. RECONSTRUCTING SANITARY MANHOLES	EACH	2.000	2.000
2270	SPV.0060	SPECIAL 16. ADJUSTING SANITARY MANHOLE COVERS	EACH	3.000	3.000
2280	SPV.0060	SPECIAL 17. SANITARY MANHOLE SEAL INTERNAL	EACH	5.000	5.000
2290	SPV.0060	SPECIAL 18. ADJUSTING WATER VALVE BOXES	EACH	14.000	14.000
2300	SPV.0060	SPECIAL 19. SALVAGE AND RELOCATE HYDRANT AND VALVE	EACH	3.000	3.000
2310	SPV.0060	SPECIAL 20. WATER MAIN VERTICAL OFFSET	EACH	4.000	4.000
2320	SPV.0090	SPECIAL 01. CONSTRUCTION STAKING CONCRETE SIDEWALK	LF	2,900.000	2,900.000
2330	SPV.0105	SPECIAL 01. VIDEO VEHICLE DETECTION SYSTEM COFFEE RD & CTH O (MOORLAND RD)	LS	1.000	1.000
2340	SPV.0105	SPECIAL 02. VIDEO VEHICLE DETECTION SYSTEM COFFEE RD & NATIONAL AVENUE	LS	1.000	1.000
2350	SPV.0105	SPECIAL 03. EMERGENCY VEHICLE PREEMPTION SYSTEM COFFEE RD & CALHOUN ROAD	LS	1.000	1.000
2360	SPV.0105	SPECIAL 04. EMERGENCY VEHICLE PREEMPTION SYSTEM COFFEE ROAD & CTH O (MOORLAND ROAD)	LS	1.000	1.000
2370	SPV.0105	SPECIAL 05. EMERGENCY VEHICLE PREEMPTION SYSTEM COFFEE RD & NATIONAL AVENUE	LS	1.000	1.000
2380	SPV.0105	SPECIAL 06. REMOVE TRAFFIC SIGNALS AND STREET LIGHTING COFFEE RD & CTH O (MOORLAND RD)	LS	1.000	1.000
2390	SPV.0105	SPECIAL 07. REMOVE TRAFFIC SIGNALS AND STREET LIGHTING COFFEE RD & NATIONAL AVENUE	LS	1.000	1.000
2400	SPV.0105	SPECIAL 08. CONSTRUCTION STAKING DETENTION PONDS	LS	1.000	1.000
2410	SPV.0105	SPECIAL 09. REMOVING GEODETIC SURVEY MONUMENT	LS	1.000	1.000
2420	SPV.0170	SPECIAL 01. TEST ROLLING	STA	81.000	81.000
2430	SPV.0195	SPECIAL 01. QMP BASE AGGREGATE DENSE 1 1/4-INCH COMPACTION	TON	36,462.000	36,462.000

3

3

CLEARING AND GRUBBING

STATION	-	STATION	OFFSET	LOCATION	201.0105 CLEARING STA	201.0205 GRUBBING STA
181+00	-	187+00	LT/RT	COFFEE RD	6	6
188+00	-	192+00	LT/RT	COFFEE RD	4	4
197+00	-	198+00	LT/RT	COFFEE RD	1	1
198+00	-	200+00	LT	COFFEE RD	2	2
200+00	-	231+00	LT/RT	COFFEE RD	31	31
30+00	-	31+00	LT/RT	POND OUTFALL SWALE	1	1
38+00	-	39+00	RT	159TH ST	1	1
40+00	-	42+00	RT/LT	159TH ST	2	2
TOTALS					**48**	**48**

REMOVING PAVEMENT

STATION	-	STATION	OFFSET	LOCATION	204.0100 REMOVING PAVEMENT SY
191+05			LT	COFFEE RD	55
217+45	-	217+70	LT/RT	COFFEE RD	230
218+62	-	218+92	LT/RT	COFFEE RD	249
224+73			RT	COFFEE RD	78
231+23			RT	COFFEE RD	222
38+60			RT	159TH ST	15
105+24	-	106+78	LT/RT	MOORLAND RD	80
TOTAL					**929**

REMOVING SMALL PIPE CULVERTS

STATION	OFFSET	LOCATION	DESCRIPTION	203.0100 REMOVING SMALL PIPE CULVERTS EACH
168+81	R/L	COFFEE RD	CROSS CULVERT	1
168+85	R/L	COFFEE RD	CROSS CULVERT	1
182+27	R/L	COFFEE RD	CROSS CULVERT	1
182+30	R/L	COFFEE RD	CROSS CULVERT	1
184+48	19' RT	COFFEE RD	DRIVEWAY CULVERT	1
186+53	21' LT	COFFEE RD	DRIVEWAY CULVERT	1
187+80	19' RT	COFFEE RD	DRIVEWAY CULVERT	1
188+02	21' LT	COFFEE RD	DRIVEWAY CULVERT	1
189+03	21' LT	COFFEE RD	DRIVEWAY CULVERT	1
189+69	19' RT	COFFEE RD	DRIVEWAY CULVERT	1
189+98	21' LT	COFFEE RD	DRIVEWAY CULVERT	1
191+07	21' LT	COFFEE RD	DRIVEWAY CULVERT	1
191+07	19' RT	COFFEE RD	DRIVEWAY CULVERT	1
192+08	22' LT	COFFEE RD	DRIVEWAY CULVERT	1
201+00	16' RT	COFFEE RD	DRIVEWAY CULVERT	1
204+20	R/L	COFFEE RD	CROSS CULVERT	1
204+34	R/L	COFFEE RD	CROSS CULVERT	1
208+73	19' LT	COFFEE RD	DRIVEWAY CULVERT	1
208+86	R/L	COFFEE RD	CROSS CULVERT	1
208+98	17' RT	COFFEE RD	DRIVEWAY CULVERT	1
216+00	20' LT	COFFEE RD	DRIVEWAY CULVERT	1
216+84	31' RT	COFFEE RD	DRIVEWAY CULVERT	1
218+99	R/L	COFFEE RD	CROSS CULVERT	1
219+18	30' LT	COFFEE RD	DRIVEWAY CULVERT	1
220+40	32' RT	COFFEE RD	DRIVEWAY CULVERT	1
222+33	22' RT	COFFEE RD	DRIVEWAY CULVERT	1
223+00	R/L	COFFEE RD	CROSS CULVERT	1
214+19	19' RT	COFFEE RD	DRIVEWAY CULVERT	1
224+73	18' RT	COFFEE RD	DRIVEWAY CULVERT	1
226+49	22' RT	COFFEE RD	DRIVEWAY CULVERT	1
228+02	21' RT	COFFEE RD	DRIVEWAY CULVERT	1
229+34	21' RT	COFFEE RD	DRIVEWAY CULVERT	1
229+93	22' RT	COFFEE RD	DRIVEWAY CULVERT	1
231+26	29' RT	COFFEE RD	DRIVEWAY CULVERT	1
10+17	R/L	ST FRANCIS DR	CROSS CULVERT	1
40+77	21' RT	159TH ST	DRIVEWAY CULVERT	1
40+93	15' LT	159TH ST	DRIVEWAY CULVERT	1
70+17	R/L	MONTEREY DR	CROSS CULVERT	1
71+09	15' LT	MONTEREY DR	DRIVEWAY CULVERT	1
71+27	23' RT	MONTEREY DR	DRIVEWAY CULVERT	1
TOTAL				**40**

REMOVING ASPHALTIC SURFACE MILLING

STATION	-	STATION		204.0120 REMOVING ASPHALTIC SURFACE MILLING SY
48+30	-	49+83	CALHOUN RD	969
26+40	-	27+65	153RD ST	432
TOTAL			**CATEGORY 0020**	**1,401**

3

REMOVING CURB & GUTTER

STATION	-	STATION	LOCATION	204.0150 REMOVING CURB & GUTTER LF
165+00	-	165+50	COFFEE RD	132
232+00	-	233+55	COFFEE RD	526
234+32	-	234+79	MICHELLE WITMER DR	202
TOTAL				**860**

ALL ITEMS ARE **CATEGORY 0010** UNLESS OTHERWISE SPECIFIED.

3

REMOVING CONCRETE SIDEWALK

STATION	-	STATION	OFFSET	LOCATION	204.0155 REMOVING CONCRETE SIDEWALK SY
218+65	-	218+79	RT	COFFEE RD	36
233+25	-	233+75	LT	COFFEE RD	207
233+37	-	233+50	RT	COFFEE RD	44
234+32	-	234+60	LT/RT	MICHELLE WITMER DR	45
TOTAL					**332**

REMOVING MANHOLES

STATION	OFFSET	LOCATION	DESCRIPTION	204.0210 REMOVING MANHOLES EACH
208+73	19.23 LT	COFFEE RD	STORM	1
208+98	16.56 RT	COFFEE RD	STORM	1
TOTAL				**2**

3

REMOVING DELINEATORS AND MARKERS

MARKER #	LOCATION	204.0180 REMOVING DELINEATORS AND MARKERS EACH	REMARKS
RW01	COFFEE RD	1	RIGHT OF WAY MARKER POST
RW02	COFFEE RD	1	RIGHT OF WAY MARKER POST
MP01	COFFEE RD	1	WOOD POST (WHITE WITH BLACK TIP)
MP02	COFFEE RD	1	WOOD POST (WHITE WITH BLACK TIP)
MP03	COFFEE RD	1	WOOD POST (WHITE WITH BLACK TIP)
MP04	COFFEE RD	1	WOOD POST (WHITE WITH BLACK TIP)
MP05	COFFEE RD	1	WOOD POST (WHITE WITH BLACK TIP)
MP06	COFFEE RD	1	WOOD POST (WHITE WITH BLACK TIP)
MP07	COFFEE RD	1	WOOD POST (WHITE WITH BLACK TIP)
MP08	COFFEE RD	1	WOOD POST (WHITE WITH BLACK TIP)
MP09	COFFEE RD	1	WOOD POST (WHITE WITH BLACK TIP)
MP10	COFFEE RD	1	WOOD POST (WHITE WITH BLACK TIP)
MP11	COFFEE RD	1	WOOD POST (WHITE WITH BLACK TIP)
MP12	COFFEE RD	1	WOOD POST (WHITE WITH BLACK TIP)
MP13	COFFEE RD	1	WOOD POST (WHITE WITH BLACK TIP)
MP14	COFFEE RD	1	WOOD POST (WHITE WITH BLACK TIP)
MP15	COFFEE RD	1	WOOD POST (WHITE WITH BLACK TIP)
MP16	COFFEE RD	1	WOOD POST (WHITE WITH BLACK TIP)
TOTAL		**18**	

REMOVING INLETS

STATION	OFFSET	LOCATION	204.0220 REMOVING INLETS EACH
218+66	55.1' LT	COFFEE RD	1
218+90	23.3' LT	COFFEE RD	1
231+86	35.3' RT	COFFEE RD	1
233+04	60.3' LT	COFFEE RD	1
109+53	32.2' LT	NATIONAL AVE	1
109+63	32.4' LT	NATIONAL AVE	1
109+95	44.1' LT	NATIONAL AVE	1
110+67	33.7' LT	NATIONAL AVE	1
TOTAL			**8**

ALL ITEMS ARE **CATEGORY 0010** UNLESS OTHERWISE SPECIFIED.

3

REMOVING STORM SEWER

FROM STATION	FROM OFFSET	TO STATION	TO OFFSET	LOCATION	204.0245.01 REMOVING STORM SEWER 12-INCH LF	204.0245.02 REMOVING STORM SEWER 18-INCH LF
218+66	55' LT	218+91	23' LT	COFFEE RD	41	--
218+91	23' LT	219+13	23' LT	COFFEE RD	22	--
218+91	23' LT	218+91	24' RT	COFFEE RD	--	48
218+91	24' RT	219+24	25' RT	COFFEE RD	--	34
231+86	35' RT	233+00	60' LT	COFFEE RD	154	--
233+00	60' LT	111+61	48' LT	COFFEE RD/NATIONAL AVE	87	--
109+53	31' LT	109+63	32' LT	NATIONAL AVE	10	--
109+63	32' LT	109+95	44' LT	NATIONAL AVE	33	--
110+67	34' LT	111+60	47' LT	NATIONAL AVE	95	--
TOTALS					**442**	**82**

ABANDONING CULVERT PIPES

FROM STATION	FROM OFFSET	TO STATION	TO OFFSET	LOCATION	DESCRIPTION	204.0270 ABANDONING CULVERT PIPES EACH
208+72	19.3 LT	208+22	278' LT	COFFEE RD/SANTA ROSA BLVD	36" CULVERT PIPE	1
18+25	20.8 LT	208+98	16.9 RT	ST FRANCIS DR/COFFEE RD	36" CULVERT PIPE	1
TOTAL						**2**

3

FINISHING ROADWAY

PROJECT I.D.	DESCRIPTION	213.0100 FINISHING ROADWAY (2722-10-70) EACH
2722-10-70	COFFEE RD	1
TOTAL		**1**

2722-10-70 COFFEE ROAD
EARTHWORK SUMMARY

LOCATION	CUT CY	SALVAGED/ UNUSABLE PAVEMENT MATERIAL	(1) AVAILABLE MATERIAL CY	UNEXPANDED FILL CY	(5) EXPANDED FILL CY	UNADJUSTED EXCAVATION BELOW SUBGRADE CY	205.0500 EXCAVATION MARSH CY	(2) 205.0100 EXCAVATION COMMON CY	UNADJUSTED BACKFILL GRANULAR CY	(5) 209.0100 EXPANDED BACKFILL GRANULAR CY	(3) COMPUTED BORROW (-) CY	(3) COMPUTED WASTE (+) CY	(4) UNSUITABLE WASTE CY	MASS HAUL CY
COFFEE RD	26,836	0	26,836	3,491	4,189	5,500	1,000	32,336	6,500	9,750		22,647	6,500	29,147
ST FRANCIS RD	75	0	75	2	2	0	0	75	0	0		73	0	73
159TH ST	1,277	0	1,277	5	6	0	0	1,277	0	0		1,272	0	1,272
MONTEREY DR	667	0	667	3	3	0	0	667	0	0		664	0	664
153RD ST	222	0	222	0	0	0	0	222	0	0		222	0	222
DETENTION POND	17,444	0	17,444	7,391	8,869	0	0	17,444	0	0		10,053	0	10,053
TOTALS	**46,521**		**46,521**	**10,892**		**5,500**	**1,000**	**52,021**	**6,500**	**9,750**		**34,931**	**6,500**	

(1) AVAILABLE MATERIAL = CUT - SALVAGED/UNUSABLE PAVEMENT MATERIAL
(2) EXCAVATION COMMON INCLUDES CUT AND EBS
(3) COMPUTED (+)WASTE (-)BORROW = USEABLE MATERIAL - EXPANDED FILL
(4) UNSUITABLE WASTE = EXCAVATION MARSH AND EXCAVATION BELOW SUBGRADE
(5) EXPANSION FACTORS: FILL = 1.2, BACKFILL GRANULAR = 1.5

ALL ITEMS ARE **CATEGORY 0010** UNLESS OTHERWISE SPECIFIED.

3

AGGREGATE ITEMS

STATION - STATION	LOCATION	305.0110* BASE AGGREGATE DENSE 3/4-INCH TON	305.0120* BASE AGGREGATE DENSE 1 1/4-INCH TON	312.0110 SELECT CRUSHED MATERIAL TON	624.0100 WATER MGAL
165+00 - 170+00	COFFEE RD	147	2,889	2,130	29
170+00 - 176+00	COFFEE RD	193	2,236	1,785	22
176+00 - 182+00	COFFEE RD	193	2,236	1,785	22
182+00 - 188+00	COFFEE RD	193	2,236	1,785	22
188+00 - 194+00	COFFEE RD	193	2,236	1,785	22
194+00 - 200+00	COFFEE RD	--	2,107	1,405	21
200+00 - 206+00	COFFEE RD	--	2,866	1,911	29
206+00 - 212+00	COFFEE RD	--	2,677	1,785	27
212+00 - 218+00	COFFEE RD	--	3,731	2,415	37
218+00 - 224+00	COFFEE RD	--	3,772	2,440	38
SUBTOTALS		919	26986	19226	269

AGGREGATE ITEMS (CONTINUED)

STATION - STATION	LOCATION	305.0110* BASE AGGREGATE DENSE 3/4-INCH TON	305.0120* BASE AGGREGATE DENSE 1 1/4-INCH TON	312.0110 SELECT CRUSHED MATERIAL TON	624.0100 WATER MGAL
224+00 - 230+00	COFFEE RD	--	3,593	2,341	36
230+00 - 234+00	COFFEE RD	--	2,875	1,838	29
10+25 - 10+81	ST FRANCIS DR	2	90	--	1
37+40 - 39+37	159TH ST	21	469	--	5
39+89 - 42+07	159TH ST	21	497	--	5
70+34 - 73+45	MONTEREY DR	30	881	--	9
105+24 - 106+78	MOORLAND RD	--	53	--	1
25+34 - 26+40	153RD ST	9	265	--	3
234+32 - 234+79	MICHELLE WITMER DR	--	76	--	1
SUBTOTALS		83	8799	4179	90
TOTALS		**1,002**	**35,785**	**23,405**	**359**

* ADDITIONAL QUANTITIES LISTED ELSEWHERE. SEE **"DRIVEWAYS"**

3

PAVEMENT ITEMS

STATION - STATION	LOCATION	415.0090 CONCRETE PAVEMENT 9-INCH SY	440.4410.S INCENTIVE IRI RIDE DOL	455.0115 ASPHALTIC MATERIAL PG64-22 TON	CAT 0020 455.0115 ASPHALTIC MATERIAL PG64-22 TON	455.0120 ASPHALTIC MATERIAL PG64-28 TON	CAT 0020 455.0120 ASPHALTIC MATERIAL PG64-28 TON	455.0605 TACK COAT GAL	CAT 0020 455.0605 TACK COAT GAL	460.1101 HMA PAVEMENT TYPE E-1 TON	CAT 0020 460.1101 HMA PAVEMENT TYPE E-1 TON	460.2000 INCENTIVE DENSITY HMA PAVEMENT DOL	CAT 0020 460.2000 INCENTIVE DENSITY HMA PAVEMENT DOL
165+00 - 170+00	COFFEE RD	--	379	24	--	19	--	149	--	775	--	500	--
170+00 - 176+00	COFFEE RD	--	455	19	--	15	--	120	--	616	--	400	--
176+00 - 182+00	COFFEE RD	--	455	19	--	15	--	120	--	616	--	400	--
182+00 - 188+00	COFFEE RD	--	455	19	--	15	--	120	--	616	--	400	--
188+00 - 194+00	COFFEE RD	--	455	19	--	15	--	120	--	615	--	400	--
194+00 - 200+00	COFFEE RD	--	455	18	--	14	--	113	--	584	--	380	--
200+00 - 206+00	COFFEE RD	--	455	26	--	21	--	166	--	853	--	550	--
206+00 - 212+00	COFFEE RD	--	455	24	--	19	--	151	--	785	--	510	--
212+00 - 218+00	COFFEE RD	--	455	31	--	24	--	193	--	999	--	640	--
218+00 - 224+00	COFFEE RD	--	682	32	--	25	--	202	--	1,043	--	670	--
224+00 - 230+00	COFFEE RD	--	682	33	--	26	--	208	--	1,080	--	700	--
230+00 - 234+00	COFFEE RD	--	455	22	--	18	--	143	--	734	--	470	--
48+30 - 49+83	CALHOUN RD	--	--	--	8	--	7	--	50	--	264	--	170
10+25 - 10+81	ST FRANCIS DR	--	--	1	--	--	--	4	--	23	--	20	--
37+40 - 39+37	159TH ST	--	--	4	--	3	--	23	--	122	--	80	--
39+89 - 42+07	159TH ST	--	--	4	--	3	--	25	--	131	--	90	--
70+34 - 73+45	MONTEREY DR	--	--	8	--	6	--	48	--	248	--	160	--
105+24 - 106+78	MOORLAND RD	72	--	--	--	--	--	--	--	--	--	--	--
25+34 - 26+40	153RD ST	--	--	2	--	2	--	15	--	77	--	50	--
26+40 - 27+65	153RD ST OVERLAY	--	--	--	--	--	4	--	--	--	79	--	60
TOTALS	**CATEGORY 0010**	**72**	**5,838**	**305**	**--**	**240**	**--**	**1,920**	**--**	**9,917**	**--**	**6,420**	**--**
TOTALS	**CATEGORY 0020**	**--**	**--**	**--**	**8**	**--**	**11**	**--**	**50**	**--**	**343**	**--**	**230**

ALL ITEMS ARE **CATEGORY 0010** UNLESS OTHERWISE SPECIFIED.

3

DRILLED TIE BARS

STATION	-	STATION	LOCATION	OFFSET	416.0610 DRILLED TIE BARS EACH
105+24	-	105+66	MOORLAND RD	LT/RT	27
106+32	-	106+78	MOORLAND RD	LT/RT	29
TOTAL					**56**

ASPHALTIC FLUMES

STATION	LOCATION	OFFSET	465.0315 ASPHALTIC FLUMES SY
193+93	COFFEE RD	LT	14
193+93	COFFEE RD	RT	14
TOTAL			**28**

SIDEWALK

STATION	-	STATION	LOCATION	602.0410 CONCRETE SIDEWALK 5-INCH SF	SPV.0090.01 CONSTRUCTION STAKING CONCRETE SIDEWALK LF
165+00	-	170+00	COFFEE RD	1,223	306
212+00	-	218+00	COFFEE RD	3,724	638
218+00	-	224+00	COFFEE RD	4,004	712
224+00	-	230+00	COFFEE RD	2,816	601
230+00	-	234+00	COFFEE RD	4,161	617
234+34	-	234+60	MICHELLE WITMER DR	405	26
TOTAL				**16,333**	**2,900**

3

DRIVEWAYS

STATION	LOCATION	OFFSET	305.0110* BASE AGGREGATE DENSE 3/4-INCH TON	305.0120* BASE AGGREGATE DENSE 1 1/4-INCH TON	416.0270 CONCRETE DRIVEWAY HES 7-INCH SY	465.0120 ASPHALTIC SURFACE DRIVEWAYS & FIELD ENTRANCES TON
179+32	COFFEE RD	LT	25	2	--	1
179+75	COFFEE RD	LT	25	2	--	1
184+48	COFFEE RD	RT	25	2	--	1
186+52	COFFEE RD	LT	--	35	--	17
187+80	COFFEE RD	RT	16	2	--	1
188+02	COFFEE RD	LT	--	16	--	12
189+03	COFFEE RD	LT	--	32	--	16
189+70	COFFEE RD	RT	14	2	--	1
189+99	COFFEE RD	LT	--	28	--	13
191+05	COFFEE RD	LT	--	25	22	7
191+07	COFFEE RD	RT	14	2	--	1
192+08	COFFEE RD	LT	--	23	--	11
199+32	COFFEE RD	RT	25	5	11	--
216+00	COFFEE RD	LT	--	18	36	2
219+28	COFFEE RD	LT	--	14	11	4
220+41	COFFEE RD	RT	--	35	43	8
222+32	COFFEE RD	RT	--	30	41	6
224+20	COFFEE RD	RT	--	18	35	2
224+73	COFFEE RD	RT	--	18	48	--
226+50	COFFEE RD	RT	12	9	11	2
227+06	COFFEE RD	RT	--	14	11	5
228+04	COFFEE RD	RT	--	14	17	3
229+34	COFFEE RD	RT	2	7	11	2
229+94	COFFEE RD	RT	--	9	15	1
231+23	COFFEE RD	RT	--	41	110	--
232+50	COFFEE RD	RT	--	32	19	13
38+60	159TH ST	RT	--	28	23	8
40+77	159TH ST	RT	--	18	--	9
40+94	159TH ST	LT	16	5	--	2
71+10	MONTEREY DR	LT	--	14	--	6
71+27	MONTEREY DR	RT	--	16	--	7
72+97	MONTEREY DR	RT	--	18	--	9
73+31	MONTEREY DR	LT	--	7	--	3
25+68	153RD ST	RT	--	7	--	3
UNDISTRIBUTED			44	129	--	--
TOTALS			**218**	**677**	**464**	**177**

* ADDITIONAL QUANTITIES LISTED ELSEWHERE. SEE **"AGGREGATE ITEMS"**

CONCRETE CURB AND GUTTER

STATION	-	STATION	LOCATION	601.0409 CONCRETE CURB & GUTTER 30-INCH TYPE A LF	601.0411 CONCRETE CURB & GUTTER 30-INCH TYPE D LF	650.5500 CONSTRUCTION STAKING CURB GUTTER AND CURB & GUTTER LF
165+00	-	170+00	COFFEE RD	--	730	730
194+00	-	200+00	COFFEE RD	--	1,200	1,200
200+00	-	206+00	COFFEE RD	--	1,197	1,197
206+00	-	212+00	COFFEE RD	--	1,202	1,202
212+00	-	218+00	COFFEE RD	--	1,978	1,978
218+00	-	224+00	COFFEE RD	--	1,746	1,746
224+00	-	230+00	COFFEE RD	--	1,193	1,193
230+00	-	234+00	COFFEE RD	--	1,693	1,693
105+24	-	106+78	MOORLAND RD	93	--	93
234+34	-	234+79	MICHELLE WITMER DR	--	115	115
TOTALS				**93**	**11,054**	**11,147**

RIPRAP

STATION	OFFSET	LT/RT	LOCATION	WIDTH (FT)		LENGTH (FT)		DEPTH (IN)	606.0200 RIPRAP MEDIUM CY	645.0120 GEOTEXTILE FABRIC TYPE HR SY
168+82	41'	LT	CROSS CULVERT	8	x	16	x	12	5	20
168+92	40'	LT	CROSS CULVERT	8	x	16	x	12	5	20
182+28	40'	LT	CROSS CULVERT	7	x	14	x	12	4	16
182+36	40'	LT	CROSS CULVERT	7	x	14	x	12	4	16
193+49	469'	LT	ENDWALL 20.0	6	x	12	x	12	3	12
193+80	34'	LT	FLUME	6	x	6	x	12	1	7
193+80	34'	RT	FLUME	6	x	6	x	12	1	7
194+70	138'	LT	ENDWALL 25.0	6	x	12	x	12	3	12
196+70	148'	LT	ENDWALL 30.0	9	x	18	x	12	6	24
196+00	350'	LT	POND OVERFLOW					24	600	900
TOTAL									**632**	**1,034**

ALL ITEMS ARE **CATEGORY 0010** UNLESS OTHERWISE SPECIFIED.

3

CULVERT PIPE

STATION	FROM OFFSET	ELEV	TO STATION	OFFSET	ELEV	SLOPE	LOCATION	520.0112 CULVERT PIPE CLASS III 12-INCH LF	520.0115 15-INCH LF	520.0118 18-INCH LF	520.1012 APRON ENDWALLS FOR CULVERT PIPES 12-INCH EACH	520.1015 15-INCH EACH	520.1018 18-INCH EACH	523.0424 CULVERT PIPE REINFORCED CONCRETE HORIZONTAL ELLIPTICAL CLASS HE-IV 24x38-INCH LF	523.0429 29x45-INCH LF	523.0524 APRON ENDWALLS FOR CULVERT PIPE REINFORCED CONCRETE HORIZONTAL ELLIPTICAL 24x38-INCH EACH	523.0529 29x45-INCH EACH	650.6000 CONSTRUCTION STAKING PIPE CULVERTS EACH
168+79.21	36.3' RT	867.77	168+82.39	41.3' LT	867.38	0.50%	COFFEE RD	-	-	-	-	-	-	-	64	-	2	1
168+89.21	36.3' RT	867.77	168+92.93	41.3' LT	867.38	0.50%	COFFEE RD	-	-	-	-	-	-	-	64	-	2	1
179+11.01	34.0' LT	871.23	179+52.22	34.4' LT	871.02	0.51%	COFFEE RD	-	-	37	-	-	2	-	-	-	-	1
179+55.22	34.4' LT	871.01	179+96.62	34.8' LT	870.80	0.51%	COFFEE RD	-	-	37	-	-	2	-	-	-	-	1
182+25.17	35.3' RT	869.99	182+28.24	36.9' LT	869.59	0.55%	COFFEE RD	-	-	-	-	-	-	63	-	2	-	1
182+33.17	35.3' RT	869.99	182+36.24	36.9' LT	869.59	0.55%	COFFEE RD	-	-	-	-	-	-	63	-	2	-	1
184+70.41	34.8' RT	871.27	184+26.40	34.8' RT	871.05	0.50%	COFFEE RD	-	-	39	-	-	2	-	-	-	-	1
186+76.60	33.8' LT	871.90	186+27.68	33.8' LT	871.66	0.49%	COFFEE RD	-	-	44	-	-	2	-	-	-	-	1
187+99.78	32.8' RT	872.92	187+60.68	32.8' RT	872.72	0.51%	COFFEE RD	-	-	34	-	-	2	-	-	-	-	1
188+24.36	34.0' LT	872.64	187+78.86	34.0' LT	872.41	0.51%	COFFEE RD	-	-	41	-	-	2	-	-	-	-	1
189+28.81	33.5' LT	873.16	188+77.15	33.5' LT	872.90	0.50%	COFFEE RD	-	-	47	-	-	2	-	-	-	-	1
189+91.67	33' RT	873.88	189+47.61	33.0' RT	873.65	0.52%	COFFEE RD	-	-	39	-	-	2	-	-	-	-	1
190+39.14	36' LT	873.71	189+73.19	34.5' LT	873.38	0.50%	COFFEE RD	-	-	61	-	-	2	-	-	-	-	1
191+30.16	36.1' LT	875.67	190+80.25	36.1' LT	874.44	2.46%	COFFEE RD	-	-	45	-	-	2	-	-	-	-	1
191+30.67	36.2' RT	875.68	190+82.89	36.2' RT	874.50	2.47%	COFFEE RD	-	-	43	-	-	2	-	-	-	-	1
192+33.78	36.2' LT	879.03	191+82.85	36.2' LT	877.24	3.52%	COFFEE RD	-	-	46	-	-	2	-	-	-	-	1
38+37.12	25.0' RT	905.33	38+83.34	25.0' RT	904.26	2.32%	159TH ST	43	-	-	2	-	-	-	-	-	-	1
40+53.84	22.0' RT	903.12	41+00.08	22.0' RT	902.66	1.00%	159TH ST	43	-	-	2	-	-	-	-	-	-	1
40+68.99	19.5' LT	902.57	41+18.15	19.5' LT	902.20	0.75%	159TH ST	46	-	-	2	-	-	-	-	-	-	1
71+27.53	25.0' LT	912.77	70+92.64	25.0' LT	911.89	2.52%	MONTEREY DR	-	31	-	-	2	-	-	-	-	-	1
71+48.81	26.0' RT	913.82	71+05.04	26.0' RT	912.83	2.26%	MONTEREY DR	41	-	-	2	-	-	-	-	-	-	1
TOTALS								**173**	**31**	**513**	**8**	**2**	**24**	**126**	**128**	**4**	**4**	**21**

1. OFFSETS AND ELEVATIONS FOR CULVERT PIPE MEASURED TO END OF ENDWALL, NOT END OF PIPE
2. ENDWALL LOCATIONS ARE GIVEN AT END OF ENDWALL, NOT END OF PIPE

COVER PLATES TEMPORARY

LOCATION	611.8120.S COVER PLATES TEMPORARY EA
UNDISTRIBUTED	25
TOTAL	**25**

PIPE UNDERDRAIN ITEMS

STATION	LOCATION	OFFSET	612.0204 PIPE UNDERDRAIN UNPERFORATED 4-INCH LF	612.0406 PIPE UNDERDRAIN WRAPPED 6-INCH LF
204+40	COFFEE RD	LT	--	135
204+40	COFFEE RD	RT	--	115
	UNDISTRIBUTED		200	--
TOTAL			**200**	**250**

DRAIN TILE EXPLORATION

LOCATION	612.0700 DRAIN TILE EXPLORATION LF
UNDISTRIBUTED	1,000
TOTAL	**1,000**

MOBILIZATION

PROJECT ID	DESCRIPTION	619.1000 MOBILIZATION EACH
2722-10-70	COFFEE RD	1
TOTAL		**1**

ALL ITEMS ARE **CATEGORY 0010** UNLESS OTHERWISE SPECIFIED.

3

STORM SEWER STRUCTURES

STR NO	STA	LOCATION	OFFSET	LT/ RT	RIM ELEV	DEPTH	CATCH BASINS 4-FT	INLETS MEDIAN 1 GRATE	INLET COVERS TYPE C	INLET COVERS TYPE MS	INLET COVERS TYPE WM	MANHOLES 4-FT	MANHOLES 5-FT	MANHOLES 8-FT	MANHOLES 6X6-FT	MANHOLE COVERS TYPE J	PIPE GRATES	GALVANIZED TRASH RACK	CHECK VALVE 24-INCH	APRON ENDWALLS FOR CULVERT PIPE REINFORCED CONCRETE 18 IN	24 IN	30 IN	48 IN	CONCRETE COLLARS FOR PIPE	RECONSTRUCTING MANHOLES	STR NOTES
							611.1004	611.3901	611.0612	611.0642	611.0660	611.2004	611.2005	611.2008	611.2066	611.0530	611.9800.S	SPV.0060.13	SPV.0060.14	522.1018	522.1024	522.1030	522.1048	520.8000	611.0420	
			FT			FT	EACH	EACH	EACH	EACH	EACH	EACH	EACH	EACH	EACH	EACH	EACH	EACH	EACH	EACH	EACH	EACH	EACH	EACH	EACH	
20.0	193+48.59	COFFEE	468.7	LT	--	--																1				1, 11
21.0	195+17.03	COFFEE	283.9	LT	890.70	15.7						1						1								11
25.0	194+69.50	COFFEE	137.5	LT	--	--													1		1					1
25.1	194+50.00	COFFEE	18.0	LT	891.06	6.30	1				1															
25.2	194+50.00	COFFEE	18.0	RT	891.06	6.13	1				1															
30.0	196+70.23	COFFEE	148.0	LT	--	--											1						1			1
31.0	198+13.25	COFFEE	6.0	RT	902.88	14.36								1		1										
31.1	198+13.25	COFFEE	18.0	LT	902.45	5.53	1				1															
31.2	198+13.25	COFFEE	18.0	RT	902.45	5.26	1				1															
32.0	202+09.24	COFFEE	6.0	RT	905.13	12.26									1	1										
32.1	202+09.24	COFFEE	54.8	RT	--	--														1						
33.0	202+68.00	COFFEE	6.0	RT	904.61	11.21									1	1										
33.1	202+73.13	COFFEE	38.6	RT	902.47	3.98		1		1																
34.0	204+34.81	COFFEE	6.0	RT	903.64	8.73									1	1										
34.1	204+34.81	COFFEE	20.0	LT	903.14	5.52	1				1															
34.2	204+00.00	COFFEE	23.4	LT	903.02	4.96	1				1															
34.3	204+34.81	COFFEE	19.0	RT	903.14	8.49	1				1															
34.4	204+50.00	COFFEE	20.2	RT	903.09	5.72	1				1															
34.5	203+90.00	COFFEE	34.7	RT	901.34	4.14		1		1																
35.0	206+48.68	COFFEE	6.0	RT	905.29	8.68									1	1										
36.0	207+05.00	COFFEE	6.0	RT	905.88	6.86							1			1										
36.1	207+05.00	COFFEE	30.0	LT	905.48	6.00	1				1															
36.2	208+25.00	COFFEE	44.0	LT	904.20	2.03		1		1																
36.3	207+00.32	COFFEE	25.9	RT	905.52	5.39	1				1															
37.0	209+00.00	COFFEE	6.0	RT	907.82	5.39							1			1										
37.1	209+01.69	COFFEE	18.0	LT	907.39	5.85	1				1															
37.2	209+00.00	COFFEE	18.0	RT	907.39	5.88	1				1															
37.3	209+05.00	COFFEE	40.0	RT	905.60	1.99		1		1																
38.0	211+05.00	COFFEE	10.6	RT	909.84	5.95							1			1										
38.1	211+05.00	COFFEE	18.0	LT	909.56	5.55	1				1															
38.2	211+05.00	COFFEE	22.8	RT	909.41	5.38	1				1															
39.0	213+65.00	COFFEE	9.1	RT	914.90	6.87					1		1													
39.1	213+65.00	COFFEE	4.0	LT	914.93	8.33	1				1															
39.2	213+60.70	COFFEE	42.0	LT	914.34	7.44	1				1															
39.3	70+75.00	MONTEREY	25.8	RT	912.25	2.99		1		1																
39.4	70+75.00	MONTEREY	25.2	LT	911.53	1.98		1		1																
39.5	213+65.00	COFFEE	30.0	RT	914.39	6.89	1				1															
40.0	216+00.00	COFFEE	18.0	RT	919.91	5.37						1				1										
40.1	216+00.00	COFFEE	4.0	LT	920.38	6.58	1				1															
40.2	216+00.00	COFFEE	10.0	LT	920.38	6.44	1				1															
40.3	216+25.00	COFFEE	30.0	LT	920.33	5.98	1				1															
40.4	216+00.00	COFFEE	41.3	RT	919.14	5.14	1				1															
SUBTOTALS							21	6	0	6	22	2	4	1	4	9	1	1	1	1	1	1	1	0	0	

ALL ITEMS ARE **CATEGORY 0010** UNLESS OTHERWISE SPECIFIED.

3

STR NO	STA	LOCATION	OFFSET	LT/ RT	RIM ELEV	DEPTH	CATCH BASINS 4-FT	INLETS MEDIAN 1 GRATE	INLET COVERS TYPE C	INLET COVERS TYPE MS	INLET COVERS TYPE WM	MANHOLES 4-FT	MANHOLES 5-FT	MANHOLES 8-FT	MANHOLES 6X6-FT	MANHOLE COVERS TYPE J	PIPE GRATES	GALVANIZED TRASH RACK	CHECK VALVE 24-INCH	APRON ENDWALLS FOR CULVERT PIPE REINFORCED CONCRETE 18 IN	24 IN	30 IN	48 IN	CONCRETE COLLARS FOR PIPE	RECONSTRUCTING MANHOLES	STR NOTES
							611.1004	611.3901	611.0612	611.0642	611.0660	611.2004	611.2005	611.2008	611.2066	611.0530	611.9800.S	SPV.0060.13	SPV.0060.14	522.1018	522.1024	522.1030	522.1048	520.8000	611.0420	
			FT			FT	EACH	EACH	EACH	EACH	EACH	EACH	EACH	EACH	EACH	EACH	EACH	EACH	EACH	EACH	EACH	EACH	EACH	EACH	EACH	
41.0	39+04.71	159TH ST	4.3	LT	905.65	8.61									1	1										
41.1	39+05.40	159TH ST	18.5	LT	904.03	3.88		1		1																
41.2	39+00.00	159TH ST	24.3	RT	904.18	3.50		1		1																
42.0	15+77.33	ST. FRANCIS	29.0	LT	908.03	8.95									1	1										
42.1	15+63.40	ST. FRANCIS	29.6	LT	905.28	6.03	1		1																	
43.0	16+98.88	ST. FRANCIS	20.5	LT	905.93	5.77			1						1											
44.0	18+25.24	ST. FRANCIS	20.8	LT	906.74	5.88									1	1								2		2, 3
50.0EX	218+89.86	COFFEE	23.7	RT	922.31	EX										1								1	1	2, 4
50.1	218+95.25	COFFEE	42.0	RT	922.03	6.97	1				1															
50.2	218+90.06	COFFEE	10.0	RT	922.31	7.53	1				1															
50.3	218+90.11	COFFEE	4.0	RT	922.31	7.51	1				1															
50.4	218+99.52	COFFEE	42.0	LT	921.97	6.95	1				1															
50.5	218+71.60	COFFEE	54.0	LT	920.84	5.68	1				1													1		2, 5
50.6 EX	106+64.63	MOORLAND	10.4	RT	922.27	EX					1														1	2, 6
51.0	221+68.07	COFFEE	4.2	RT	924.53	7.75	1				1															
51.1	221+68.07	COFFEE	10.0	LT	924.53	7.54	1				1															
51.2	221+68.07	COFFEE	40.4	LT	923.74	5.52	1				1															
51.3	221+68.07	COFFEE	36.2	RT	924.03	6.62	1				1															
51.4	223+03.23	COFFEE	30.0	RT	924.90	4.90	1				1													1		2, 10
59.0EX	233+54.44	COFFEE	120.5	LT	897.85	EX					1													2	1	2, 7
59.1	233+65.10	COFFEE	68.7	LT	898.16	4.84	1				1															
60.0	233+03.68	COFFEE	60.0	LT	900.27	4.56			1				1													8.0
60.1	233+05.85	COFFEE	33.3	LT	901.14	7.15	1				1															
60.2	233+08.05	COFFEE	10.0	LT	901.46	6.87	1				1															
60.3	233+08.86	COFFEE	2.0	LT	901.42	6.46	1				1															
61.0	229+55.00	COFFEE	6.0	RT	914.91	6.72						1				1										
61.1	229+65.00	COFFEE	30.0	RT	914.04	6.23	1				1															
62.0	227+25.00	COFFEE	30.0	RT	921.29	6.09	1				1															
62.1	226+46.50	COFFEE	30.0	LT	922.97	6.29	1				1															
70.0	109+63.30	NATIONAL	40.9	LT	901.70	5.82	1				1													1		2, 9
70.1	109+75.58	NATIONAL	45.6	LT	901.20	5.17	1				1															
70.2	233+14.41	COFFEE	42.0	RT	901.93	5.61	1				1															
SUBTOTALS							21	2	3	2	22	1	1	0	4	5	0	0	0	0	0	0	0	8	3	
TOTALS							**42**	**8**	**3**	**8**	**44**	**3**	**5**	**1**	**8**	**14**	**1**	**1**	**1**	**1**	**1**	**1**	**1**	**8**	**3**	

GENERAL NOTES:

A. LOCATION/ELEVATION OF STRUCTURES IN CURB AND GUTTER SECTION REFER TO FLOW LINE OF CURB.
B. LOCATION/ELEVATION OF STRUCTURES NOT IN CURB AND GUTTER SECTION REFER TO CENTER OF STRUCTURE.
C. DEPTH OF STRUCTURE IS MEASURED FROM RIM ELEVATION TO LOWEST PIPE INVERT OR SUMP.
D. END WALL LOCATIONS ARE GIVEN AT END OF ENDWALL, NOT END OF PIPE

STRUCTURE NOTES:

1. APRON ENDWALL WITH RIP RAP.
2. CONCRETE COLLAR REQ'D. VERIFY IE IN FIELD.
3. CONNECT PIPES FROM SOUTH & EAST. REMOVE PIPE FROM WEST. ABANDON PIPE TO NORTH.
4. REBUILD EXISTING MANHOLE. PIPE TO SOUTHWEST TO REMAIN. REMOVE PIPES FROM NORTH AND SOUTHEAST. CONNECT NEW PIPES FROM NORTH AND SOUTHEAST.
5. CONNECT PIPE FROM WEST.
6. REBUILD EXISTING INLET.
7. REBUILD EXISTING MANHOLE. PIPES TO NORTHEAST AND SOUTHEAST TO REMAIN. REMOVE PIPES FROM WEST AND SOUTHWEST. CONNECT NEW PIPES FROM WEST AND SOUTHWEST.
8. REPLACE EXISTING MANHOLE.
9. CONNECT PIPE TO SOUTHEAST.
10. CONNECT PIPE FROM SOUTH.
11. SEE CONSTRUCTION DETAILS - STORMWATER POND

ALL ITEMS ARE **CATEGORY 0010** UNLESS OTHERWISE SPECIFIED.

3

STORM SEWER PIPE REINFORCED CONCRETE

PIPE NUMBER	UPSTREAM STRUCTURE	DOWNSTREAM STRUCTURE	INV IN	INV OUT	PIPE SLOPE	STORM SEWER PIPE REINFORCED CONCRETE CLASS III						
						12 IN	15 IN	18 IN	24 IN	30 IN	42 IN	48 IN
						608.0312	608.0315	608.0318	608.0324	608.0330	608.0342	608.0348
						FT	FT	FT	FT	FT	FT	FT
P21.0	21.0	20.0	876.00	875.27	0.30%					250.00		
P25.1	25.1	25.0	886.76	886.16	0.50%				121.08			
P25.2	25.2	25.1	886.93	886.76	0.50%				36.00			
P31.0	31.0	30.0	888.52	886.73	0.87%							210.19
P31.1	31.1	31.0	898.92	898.73	1.00%		24.00					
P31.2	31.2	31.0	899.19	899.05	2.00%			12.00				
P32.0	32.0	31.0	892.87	888.57	1.11%							395.99
P32.1	32.1	32.0	901.60	899.63	4.30%			48.82				
P33.0	33.0	32.0	893.40	892.91	0.93%							58.76
P33.1	33.1	33.0	898.49	898.20	1.00%			33.02				
P34.0	34.0	33.0	894.91	893.44	0.91%							166.81
P34.1	34.1	34.0	899.62	899.40	1.00%	26.00						
P34.2	34.2	34.1	900.06	899.73	1.00%	34.98						
P34.3	34.3	34.0	896.65	896.56	1.00%			13.00				
P34.4	34.4	34.3	899.37	899.24	1.00%	15.24						
P34.5	34.5	34.3	897.20	896.76	1.00%			47.48				
P35.0	35.0	34.0	896.61	894.94	0.80%							213.86
P36.0	36.0	35.0	899.02	898.24	1.55%				56.33			
P36.1	36.1	36.0	901.48	901.16	1.00%	36.00						
P36.2	36.2	36.1	902.17	901.58	0.50%	120.81						
P36.3	36.3	36.0	902.13	901.97	1.00%	20.42						
P37.0	37.0	36.0	902.43	899.14	1.74%				195.00			
P37.1	37.1	37.0	903.54	903.43	0.52%	24.06						
P37.2	37.2	37.0	903.51	903.43	1.00%	12.00						
P37.3	37.3	37.2	903.61	903.51	0.50%	22.56						
P38.0	38.0	37.0	903.89	902.55	0.67%				205.05			
P38.1	38.1	38.0	906.01	905.88	0.50%	28.61						
P38.2	38.2	38.0	906.03	905.99	0.50%	12.21						
P39.0	39.0	38.0	908.03	904.01	1.57%				260.00			
P39.1	39.1	39.0	908.60	908.53	0.59%			13.09				
P39.2	39.2	39.1	908.90	908.72	0.50%		38.22					
P39.3	39.3	39.2	909.26	909.00	0.75%		37.53					
P39.4	39.4	39.3	909.55	909.31	0.50%		51.00					
P39.5	39.5	39.0	909.50	909.03	2.83%	20.91						
SUBTOTALS						374	151	167	873	250	0	1,046

PIPE NUMBER	UPSTREAM STRUCTURE	DOWNSTREAM STRUCTURE	INV IN	INV OUT	PIPE SLOPE	STORM SEWER PIPE REINFORCED CONCRETE CLASS III						
						12 IN	15 IN	18 IN	24 IN	30 IN	42 IN	48 IN
						608.0312	608.0315	608.0318	608.0324	608.0330	608.0342	608.0348
						FT	FT	FT	FT	FT	FT	FT
P40.0	40.0	39.0	914.54	908.15	2.76%				235.17			
P40.1	40.1	40.0	915.80	915.54	1.37%	22.00						
P40.2	40.2	40.1	915.94	915.90	1.00%	6.00						
P40.3	40.3	40.2	916.35	916.06	1.00%	32.14						
P40.4	40.4	40.0	916.00	915.66	1.68%	23.28						
P41.0	41.0	35.0	897.04	896.66	0.82%							52.66
P41.1	41.1	41.0	900.15	900.05	1.00%	14.26						
P41.2	41.2	41.0	900.68	900.44	1.00%	28.94						
P42.0	42.0	41.0	899.08	897.86	0.80%							158.72
P42.1	42.1	42.0	901.25	901.15	1.00%				13.93			
P43.0	43.0	42.0	900.16	899.58	0.50%						121.84	
P44.0	44.0	43.0	900.86	900.26	0.50%						126.37	
P50.1	50.1	50.0 EX	917.06	916.79	1.85%	19.04						
P50.2	50.2	50.0 EX	916.78	916.73	0.50%			13.74				
P50.3	50.3	50.2	916.80	916.78	0.50%			6.00				
P50.4	50.4	50.3	917.02	916.80	0.50%			46.96				
P50.5	50.5	50.5	917.16	917.02	0.50%			30.39				
P51.0	51.0	50.0 EX	918.78	916.60	0.75%			278.90				
P51.1	51.1	51.0	918.99	918.87	1.00%		14.15					
P51.2	51.2	51.1	920.22	919.99	0.81%	30.36						
P51.3	51.3	51.0	919.41	919.12	1.00%	32.04						
P51.4	51.4	51.0	922.00	920.66	1.00%	137.61						
P59.1	59.1	59.0EX	895.32	894.30	2.00%	53.13						
P60.0	60.0	59.0EX	895.71	893.90	2.25%		83.44					
P60.1	60.1	60.0	895.99	895.83	0.84%		21.40					
P60.2	60.2	60.1	896.59	896.06	1.98%		28.82					
P60.3	60.3	60.2	896.96	896.84	2.00%	8.04						
P61.0	61.0	60.0	908.19	895.87	3.35%		371.79					
P61.1	61.1	61.0	909.81	909.58	1.00%	26.00						
P62.0	62.0	61.0	917.20	908.65	3.75%		231.24					
P62.1	62.1	62.0	918.68	917.25	1.50%	98.81						
P70.0	70.0	Exist	897.88	897.78	1.32%	8.72						
P70.1	70.1	70.0	898.03	897.98	0.50%	13.17						
P70.2	70.2	70.1	898.32	898.13	0.50%	41.33						
SUBTOTALS						595	751	376	249	0	248	211
TOTALS						**969**	**902**	**543**	**1,123**	**250**	**248**	**1,257**

3

GENERAL NOTES:

1. PIPE LENGTHS GIVEN ARE FROM CENTER OF STRUCTURE TO CENTER OF STRUCTURE.
2. PIPE SLOPES GIVEN ARE TRUE SLOPES FROM INSIDE WALL OF STRUCTURE TO INSIDE WALL OF STRUCTURE.

ALL ITEMS ARE **CATEGORY 0010** UNLESS OTHERWISE SPECIFIED.

3

CONCRETE MEDIAN SLOPED NOSE

STATION	LOCATION	OFFSET	TYPE	620.0300 CONCRETE MEDIAN SLOPED NOSE SF
165+45	COFFEE RD	R/L	TYPE 1	54
168+55	COFFEE RD	R/L	TYPE 1	54
213+45	COFFEE RD	R/L	TYPE 1	54
217+55	COFFEE RD	R/L	TYPE 1	59
218+75	COFFEE RD	R/L	TYPE 1	59
222+05	COFFEE RD	R/L	TYPE 1	54
229+95	COFFEE RD	R/L	TYPE 1	69
233+41	COFFEE RD	LT	TYPE 2	17
233+50	COFFEE RD	R/L	TYPE 1	51
233+65	COFFEE RD	LT	TYPE 2	18
105+50	MOORLAND RD	R/L	TYPE 1	54
106+50	MOORLAND RD	R/L	TYPE 1	54
234+35	MICHELLE WITMER DR	LT	TYPE 2	19
234+35	MICHELLE WITMER DR	RT	TYPE 2	19
234+52	MICHELLE WITMER DR	LT	TYPE 2	20
234+58	MICHELLE WITMER DR	RT	TYPE 2	20
234+64	MICHELLE WITMER DR	R/L	TYPE 1	33
109+82	NATIONAL AVE	RT	TYPE 2	20
110+80	NATIONAL AVE	RT	TYPE 2	20
111+14	NATIONAL AVE	LT	TYPE 1	52
TOTAL				**800**

EROSION CONTROL

STATION - STATION	LOCATION	628.1104 EROSION BALES EACH	628.1504 SILT FENCE LF	628.1520 SILT FENCE MAINTENANCE LF	628.6510 SOIL STABILIZER TYPE B ACRE	628.7005 INLET PROTECTION TYPE A EACH	628.7015 INLET PROTECTION TYPE C EACH	628.7504 TEMPORARY DITCH CHECKS LF	628.7555 CULVERT PIPE CHECKS EACH	628.7570 ROCK BAGS EACH	631.0300 SOD WATER MGAL	631.1100 SOD EROSION CONTROL SY
165+00 - 170+00	COFFEE RD	44	193	193	--	--	--	--	6	10	21	958
170+00 - 176+00	COFFEE RD	115	1,201	1,201	--	--	--	--	--	--	36	1,607
176+00 - 182+00	COFFEE RD	143	1,053	1,053	--	--	--	--	12	--	30	1,330
182+00 - 188+00	COFFEE RD	323	806	806	--	--	--	--	15	--	29	1,309
188+00 - 194+00	COFFEE RD	--	--	--	--	--	--	96	21	--	22	968
194+00 - 200+00	COFFEE RD	--	469	469	--	--	4	--	--	--	--	--
200+00 - 206+00	COFFEE RD	--	645	645	--	2	5	--	--	--	--	--
206+00 - 212+00	COFFEE RD	--	830	830	--	2	6	--	--	--	--	--
212+00 - 218+00	COFFEE RD	--	556	556	--	--	8	--	--	--	--	--
218+00 - 224+00	COFFEE RD	--	205	205	--	--	11	--	--	--	--	--
224+00 - 230+00	COFFEE RD	--	527	527	--	--	4	--	--	--	--	--
230+00 - 234+00	COFFEE RD	--	428	428	--	--	10	--	--	--	--	--
10+25 - 18+50	ST FRANCIS DR	--	--	--	--	--	--	--	9	--	2	71
38+00 - 39+00	159TH ST	--	--	--	--	3	--	12	6	--	3	114
40+50 - 41+50	159TH ST	--	--	--	--	--	--	24	6	--	3	120
70+75 - 74+00	MONTEREY DR	--	--	--	--	2	--	--	6	--	4	159
25+50 - 26+50	153RD ST	--	65	65	--	--	--	--	3	--	1	55
	MICHELLE WITMER DR	--	--	--	--	--	2	--	--	--	--	--
	NATIONAL AVE	--	--	--	--	--	3	--	--	--	--	--
	POND	263	1,015	1,015	2.5	--	--	--	--	--	2	101
UNDISTRIBUTED		222	1,998	1,998	--	--	--	33	21	--	--	--
TOTALS		**1,110**	**9,991**	**9,991**	**2.5**	**9**	**53**	**165**	**105**	**10**	**153**	**6,792**

3

MOBILIZATIONS EROSION CONTROL

PROJECT ID	DESCRIPTION	628.1905 MOBILIZATIONS EROSION CONTROL EACH	628.1910 MOBILIZATIONS EMERGENCY EROSION CONTROL EACH
2722-10-70	COFFEE RD	1	2
TOTALS		**1**	**2**

MARKERS CULVERT END

LOCATION	633.5200 MARKERS CULVERT END EACH
168+79 RT	1
168+82 LT	1
168+89 RT	1
168+92 LT	1
182+25 RT	1
182+28 LT	1
182+33 RT	1
182+36 LT	1
ENDWALL 32.1	1
TOTAL	**9**

ALL ITEMS ARE **CATEGORY 0010** UNLESS OTHERWISE SPECIFIED.

3

RESTORATION ITEMS

STATION - STATION	LOCATION	625.0500 SALVAGED TOPSOIL SY	627.0200 MULCHING SY	629.0205 FERTILIZER TYPE A CWT	629.0210 FERTILIZER TYPE B CWT	630.0130 SEEDING MIXTURE NO. 30 LB	630.0175 SEEDING MIXTURE NO. 75 LB	630.0200 SEEDING TEMPORARY LB
165+00 - 170+00	COFFEE RD	3,204	2,150	0.7	1.4	39	--	20
170+00 - 176+00	COFFEE RD	4,586	2,818	1.1	1.8	51	--	26
176+00 - 182+00	COFFEE RD	3,846	2,384	0.9	1.5	43	--	22
182+00 - 188+00	COFFEE RD	3,929	2,489	0.9	1.6	45	--	23
188+00 - 194+00	COFFEE RD	4,153	3,088	0.7	1.9	56	--	28
194+00 - 200+00	COFFEE RD	2,517	2,517	--	1.6	45	--	23
200+00 - 206+00	COFFEE RD	2,592	2,592	--	1.6	47	--	24
206+00 - 212+00	COFFEE RD	1,963	1,963	--	1.2	35	--	18
212+00 - 218+00	COFFEE RD	2,261	2,261	--	1.4	41	--	21
218+00 - 224+00	COFFEE RD	1,859	1,859	--	1.2	33	--	17
224+00 - 230+00	COFFEE RD	1,590	1,590	--	1.0	29	--	15
230+00 - 234+00	COFFEE RD	1,284	1,284	--	0.8	23	--	12
10+25 - 18+50	ST FRANCIS DR	418	340	--	0.2	6	--	3
37+73 - 39+00	159TH ST	567	441	0.1	0.3	8	--	4
40+50 - 42+08	159TH ST	569	437	0.1	0.3	8	--	4
70+75 - 73+00	MONTEREY DR	838	663	0.1	0.4	12	--	6
25+50 - 26+00	153RD ST	200	140	--	0.1	3	--	2
	POND	13,110	12,757	0.2	8.0	--	230	115
UNDISTRIBUTED		12,372	10,443	1.2	7.1	131	--	66
TOTALS		**61,858**	**52,216**	**6**	**33**	**655**	**230**	**449**

NOTE: OVERSOW PERMANENT SEED WITH TEMPORARY SEED TO HELP ENSURE RAPID REVEGETATION

TREES

LOCATION	632.0101.01 TREES BLACK HILLS SPRUCE (PICEA GLAUCA VAR. DENSATA) B&B 6-FOOT EACH	632.0101.02 TREES WHITE PINE (PINUS STROBUS) B&B 6-FOOT EACH	632.9101 LANDSCAPE PLANTING SURVEILLANCE AND CARE CYCLES EACH
DETENTION POND SCREENING	24	14	26
TOTALS	**24**	**14**	**26**

3

GEOTEXTILE FABRIC TYPE SR

LOCATION	645.0135 GEOTEXTILE FABRIC TYPE SR SY	NOTES
UNDISTRIBUTED	1,500	AT MARSH EXCAVATION LOCATIONS
TOTAL	**1,500**	

FIELD OFFICE TYPE C

PROJECT ID	DESCRIPTION	642.5201 FIELD OFFICE TYPE C EACH
2722-10-70	COFFEE RD	1
TOTAL		**1**

TRAFFIC CONTROL

PROJECT ID	DESCRIPTION	643.0100 TRAFFIC CONTROL (2722-10-70) EACH
2722-10-70	COFFEE RD	1
TOTAL		**1**

TRAFFIC CONTROL ITEMS

STAGE	DAYS	643.0300 TRAFFIC CONTROL DRUMS NUMBER	DAYS	643.0420 TRAFFIC CONTROL BARRICADES TYPE III NUMBER	DAYS	643.0705 TRAFFIC CONTROL WARNING LIGHTS TYPE A NUMBER	DAYS	643.0715 TRAFFIC CONTROL WARNING LIGHTS TYPE C NUMBER	DAYS	643.0900 TRAFFIC CONTROL SIGNS NUMBER	DAYS	643.1000 TRAFFIC CONTROL SIGNS FIXED MESSAGE SF
CLOSURE	163	--	--	32	5216	64	10432	--	--	23	3749	175
CALHOUN RD (STAGE 1)	5	16	80	2	10	4	20	5	25	6	30	--
CALHOUN RD (STAGE 2)	5	17	85	7	35	14	70	10	50	10	50	--
MOORLAND RD	21	73	1533	5	105	10	210	14	294	23	483	--
NATIONAL AVE	21	87	1827	7	147	14	294	25	525	17	357	--
MICHELLE WITMER DR	21	14	294	2	42	4	84	--	--	2	42	--
TOTALS			**3,819**		**5,555**		**11,110**		**894**		**4,711**	**175**

ALL ITEMS ARE **CATEGORY 0010** UNLESS OTHERWISE SPECIFIED.

PERMANENT SIGNING

SIGN #	SIGN CODE	SIGN SIZE IN	637.2210 SIGNS TYPE II REFLECTIVE H SF	637.2215 SIGNS TYPE II REFLECTIVE H FOLDING SF	637.2230 SIGNS TYPE II REFLECTIVE F SF	634.0612 POSTS WOOD 4X6-IN X 12 FT EACH	634.0614 POSTS WOOD 4X6-IN X 14 FT EACH	634.0616 POSTS WOOD 4X6-IN X 16 FT EACH	SIGN MOUNTED ON SAME POST AS	REMARKS
1P01	R1-1F	30 X 30	-	5.18	-	-	-	-	SIGNAL	FOLDING STOP
1P02	R1-1F	30 X 30	-	5.18	-	-	-	-	SIGNAL	FOLDING STOP
1P03	R1-1F	30 X 30	-	5.18	-	-	-	-	SIGNAL	FOLDING STOP
1P04	R1-1F	30 X 30	-	5.18	-	-	-	-	SIGNAL	FOLDING STOP
1P05	R4-7	24 X 30	5	-	-	-	-	1	-	KEEP RIGHT
1P06	R1-1F	30 X 30	-	5.18	-	-	-	-	1P05	FOLDING STOP
1P07	R3-4	24 X 24	4	-	-	-	-	-	1P05	NO U-TURN
1P08	R2-1	24 X 30	5	-	-	-	1	-	-	SPEED LIMIT 40
1P09	R4-7	24 X 30	5	-	-	-	1	-	-	KEEP RIGHT
1P10	W6-3	36 X 36	-	-	9	-	-	1	-	TWO WAY TRAFFIC
1P11	R2-1	24 X 30	5	-	-	-	1	-	-	SPEED LIMIT 40
1P12	R2-1	24 X 30	5	-	-	-	1	-	-	SPEED LIMIT 40
2P01	R2-1	24 X 30	5	-	-	-	1	-	-	SPEED LIMIT 40
2P02	R2-1	24 X 30	5	-	-	-	1	-	-	SPEED LIMIT 25
2P03	R1-1	30 X 30	5.18	-	-	-	1	-	-	STOP
2P04	R2-1	24 X 30	5	-	-	-	1	-	-	SPEED LIMIT 35
2P05	R2-1	24 X 30	5	-	-	-	1	-	-	SPEED LIMIT 35
2P06	R1-1	30 X 30	5.18	-	-	-	1	-	-	STOP
2P07	R1-1	30 X 30	5.18	-	-	-	1	-	-	STOP
2P08	R2-1	24 X 30	5	-	-	-	1	-	-	SPEED LIMIT 25
2P09	R2-1	24 X 30	5	-	-	-	1	-	-	SPEED LIMIT 35
2P10	W6-3	36 X 36	-	-	9	-	-	1	-	TWO WAY TRAFFIC
2P11	R1-1	30 X 30	5.18	-	-	-	1	-	-	STOP
2P12	R2-1	24 X 30	5	-	-	-	1	-	-	SPEED LIMIT 25
2P13	R4-7	24 X 30	5	-	-	-	1	-	-	KEEP RIGHT
2P14	R2-1	24 X 30	5	-	-	-	1	-	-	SPEED LIMIT 35
2P15	R1-1F	30 X 30	-	5.18	-	-	-	-	SIGNAL	FOLDING STOP
2P16	R1-1F	30 X 30	-	5.18	-	-	-	-	SIGNAL	FOLDING STOP
2P17	R4-7	24 X 30	5	-	-	-	-	-	SIGNAL	KEEP RIGHT
2P18	R7-52R	18 X 24	3	-	-	-	-	-	SIGNAL	NO PARKING BETWEEN SIGNS (ARROW RIGHT)
2P19	R1-1	30 X 30	5.18	-	-	-	-	-	SIGNAL	FOLDING STOP
2P20	R1-1	30 X 30	5.18	-	-	-	-	-	SIGNAL	FOLDING STOP
2P21	R4-7	24 X 30	5	-	-	-	-	-	SIGNAL	KEEP RIGHT
2P22	R7-52L	18 X 24	3	-	-	-	-	-	SIGNAL	NO PARKING BETWEEN SIGNS (ARROW LEFT)
2P23	R7-52L	18 X 24	3	-	-	-	-	-	SIGNAL	NO PARKING BETWEEN SIGNS (ARROW LEFT)
		SUBTOTAL	124.08	36.26	18.00	0	17	3		

ALL ITEMS ARE **CATEGORY 0010** UNLESS OTHERWISE SPECIFIED.

PERMANENT SIGNING (CONTINUED)

SIGN #	SIGN CODE	SIGN SIZE IN	637.2210 SIGNS TYPE II REFLECTIVE H SF	637.2215 SIGNS TYPE II REFLECTIVE H FOLDING SF	637.2230 SIGNS TYPE II REFLECTIVE F SF	634.0612 POSTS WOOD 4X6-IN X 12 FT EACH	634.0614 POSTS WOOD 4X6-IN X 14 FT EACH	634.0616 POSTS WOOD 4X6-IN X 16 FT EACH	SIGN MOUNTED ON SAME POST AS	REMARKS
2P24	R4-7	24 X 30	5	-	-	-	-	-	SIGNAL	KEEP RIGHT
2P25	R1-1F	30 X 30	-	5.18	-	-	-	-	SIGNAL	FOLDING STOP
2P26	R1-1F	30 X 30	-	5.18	-	-	-	-	SIGNAL	FOLDING STOP
2P27	R7-52R	18 X 24	3	-	-	-	-	-	SIGNAL	NO PARKING BETWEEN SIGNS (ARROW RIGHT)
2P28	R4-7	24 X 30	5	-	-	-	-	-	SIGNAL	KEEP RIGHT
2P29	R1-1F	30 X 30	-	5.18	-	-	-	-	SIGNAL	FOLDING STOP
2P30	R1-1F	30 X 30	-	5.18	-	-	-	-	SIGNAL	FOLDING STOP
2P31	R2-1	24 X 30	5	-	-	-	1	-	-	SPEED LIMIT 35
3P01	R4-7	24 X 30	5	-	-	-	1	-	-	KEEP RIGHT
3P02	W6-3	36 X 36	-	-	9	-	-	1	-	TWO WAY TRAFFIC
3P03	R2-1	24 X 30	5	-	-	-	1	-	-	SPEED LIMIT 35
3P04	W6-3	36 X 36	-	-	9	-	-	1	-	TWO WAY TRAFFIC
3P05	R2-1	24 X 30	5	-	-	-	1	-	-	SPEED LIMIT 25
3P06	R1-1	30 X 30	5.18	-	-	-	1	-	-	STOP
3P07	R3-8Z	48 X 30	10	-	-		1	-	-	INTERSECTION LANE CONTROL
3P08	R4-7	24 X 30	5	-	-	-	1	-	-	KEEP RIGHT
3P09	R1-1F	30 X 30	-	5.18	-	-	-	-	SIGNAL	FOLDING STOP
3P10	R1-1F	30 X 30	-	5.18	-	-	-	1	-	FOLDING STOP
3P11	R3-4	24 X 24	4	-	-		-	-	3P10	NO U-TURN
3P12	R1-1F	30 X 30	-	5.18	-	-	-	-	SIGNAL	FOLDING STOP
3P13	R1-2	36 X 31	3.88	-	-	-	1	-	-	YIELD
3P14	W12-1D	24 X 24	-	-	4	1	-	-	-	DOUBLE DOWN ARROWS (2' MOUNTING HEIGHT)
3P15	R4-7	24 X 30	5	-	-	-	-	-	3P10	KEEP RIGHT
3P16	R4-7	24 X 30	5	-	-	-	-	1	-	KEEP RIGHT
3P17	W12-1D	24 X 24	-	-	4	-	-	-	SIGNAL	DOUBLE DOWN ARROWS (2' MOUNTING HEIGHT)
3P18	R1-1F	30 X 30	-	5.18	-	-	-	-	SIGNAL	FOLDING STOP
3P19	R1-1F	30 X 30	-	5.18	-	-	-	-	3P16	FOLDING STOP
3P20	R3-4	24 X 24	4	-	-	-	-	-	3P16	NO U-TURN
3P21	W12-1D	24 X 24	-	-	4	1	-	-	-	DOUBLE DOWN ARROWS (2' MOUNTING HEIGHT)
3P22	R1-1F	30 X 30	-	5.18	-	-	1	-	-	FOLDING STOP
3P23	R1-1	30 X 30	5.18	-	-	-	1	-	-	STOP
		SUBTOTAL	80.24	51.80	30.00	2	10	4		
		TOTALS	**204.32**	**88.06**	**48.00**	**2**	**27**	**7**		

ALL ITEMS ARE **CATEGORY 0010** UNLESS OTHERWISE SPECIFIED.

REMOVING SIGNS

SIGN #	SIGN CODE	638.2602 REMOVING SIGNS TYPE II EACH	638.3000 REMOVING SMALL SIGN SUPPORTS EACH	SIGN MOUNTED ON SAME POST AS	REMARKS
1R01	R1-1F	1	-	SIGNAL	FOLDING STOP
1R02	R1-1F	1	-	SIGNAL	FOLDING STOP
1R03	R1-1F	1	-	SIGNAL	FOLDING STOP
1R04	R1-1F	1	-	SIGNAL	FOLDING STOP
1R05	R3-7R	1	1	-	RIGHT LANE MUST TURN RIGHT
1R06	W3-3	1	1	-	SIGNAL AHEAD
1R07	R3-8	1	1	-	INTERSECTION LANE CONTROL
1R08	R2-1	1	1	-	SPEED LIMIT 40
1R09	R2-1	1	1	-	SPEED LIMIT 40
1R10	R2-1	1	1	-	SPEED LIMIT 40
1R11	W2-2	1	1	-	T-INTERSECTION
2R01	R2-1	1	1	-	SPEED LIMIT 40
2R02	R2-1	1	1	-	SPEED LIMIT 25
2R03	R1-1	1	1	-	STOP
2R04	R2-1	1	1	-	SPEED LIMIT 40
2R05		1	1	-	REDUCED SPEED AHEAD
2R06	W13-1	1	-	2R05	35 MPH
2R07	R1-1	1	1	-	STOP
2R08	R2-1	1	1	-	SPEED LIMIT 25
2R09	W9-12	1	-	2R08	SLOW CHILDREN AT PLAY
2R10	R1-1	1	1	-	STOP
2R11	R2-1	1	1	-	SPEED LIMIT 35
2R12	W3-3	1	1	-	SIGNAL AHEAD
2R13	R1-1	1	1	-	STOP
2R14	R2-1	1	1	-	SPEED LIMIT 25
2R15	R2-1	1	1	-	SPEED LIMIT 35
2R16	R1-1F	1	-	SIGNAL	FOLDING STOP
2R17	R1-1F	1	-	SIGNAL	FOLDING STOP
2R18	R7-52R	1	-	SIGNAL	NO PARKING BETWEEN SIGNS (ARROW RIGHT)
2R19	R1-1F	1	-	SIGNAL	FOLDING STOP
SUBTOTAL		30	20		

REMOVING SIGNS (CONTINUED)

		638.2602 REMOVING SIGNS	638.3000 REMOVING SMALL SIGN		
2R20	R4-7	1	-	SIGNAL	KEEP RIGHT
2R21	R7-52L	1	-	SIGNAL	NO PARKING BETWEEN SIGNS (ARROW LEFT)
2R22	R7-52L	1	-	SIGNAL	NO PARKING BETWEEN SIGNS (ARROW LEFT)
2R23	R4-7	1	-	SIGNAL	KEEP RIGHT
2R24	R1-1F	1	-	SIGNAL	FOLDING STOP
2R25	R1-1F	1	-	SIGNAL	FOLDING STOP
2R26	R7-52R	1	-	SIGNAL	NO PARKING BETWEEN SIGNS (ARROW RIGHT)
2R27	R1-1F	1	-	SIGNAL	FOLDING STOP
2R28	R7-1R	1	1	-	NO PARKING ANY TIME (ARROW RIGHT)
2R29	R7-1L	1	1	-	NO PARKING ANY TIME (ARROW LEFT)
2R30	R7-1D	1	1	-	NO PARKING ANY TIME (DOUBLE)
2R31	R7-1D	1	1	-	NO PARKING ANY TIME (DOUBLE)
3R01	R7-1L	1	1	-	NO PARKING ANY TIME (ARROW LEFT)
3R02	R7-1R	1	1	-	NO PARKING ANY TIME (ARROW RIGHT)
3R03	R2-1	1	1	-	SPEED LIMIT 35
3R04	W3-3	1	1	-	SIGNAL AHEAD
3R05	W3-3	1	1	-	SIGNAL AHEAD
3R06	W3-3P	1	-	3R05	SIGNAL AHEAD
3R07	R1-1	1	1	-	STOP
3R08	R2-1	1	1	-	SPEED LIMIT 35
3R09	R3-8A	1	1	-	INTERSECTION LANE CONTROL
3R10	R1-2	1	1	-	YIELD
3R11	R1-1F	1	-	SIGNAL	FOLDING STOP
3R12	R1-1F	1	-	SIGNAL	FOLDING STOP
3R13	R4-7	1	1	-	KEEP RIGHT
3R14	R1-1F	1	-	3R13	FOLDING STOP
3R15	R1-2	1	1	-	YIELD
SUBTOTAL		27	15		
TOTALS		**57**	**35**		

3

ALL ITEMS ARE **CATEGORY 0010** UNLESS OTHERWISE SPECIFIED.

3

REMOVING PAVEMENT MARKINGS

LOCATION	646.0600 REMOVING PAVEMENT MARKINGS LF	647.0955 REMOVING PAVEMENT MARKING ARROWS EACH	647.0965 REMOVING PAVEMENT MARKING WORDS EACH
CALHOUN RD	1,283	4	4
MOORLAND RD NB	86	1	1
MOORLAND RD SB	86	1	1
NATIONAL AVE NB	310	-	-
NATIONAL AVE SB	295	2	1
TOTALS	**2,060**	**8**	**7**

TEMPORARY PAVEMENT MARKING

LOCATION	649.0400 TEMPORARY PAVEMENT MARKING REMOVABLE TAPE 4-INCH WHITE LF	649.0400 TEMPORARY PAVEMENT MARKING REMOVABLE TAPE 4-INCH YELLOW LF	649.0801 TEMPORARY PAVEMENT MARKING REMOVABLE TAPE 8-INCH LF	649.1200 TEMPORARY PAVEMENT MARKING STOP LINE REMOVABLE TAPE 18-INCH LF
CALHOUN RD (STAGE 1)	770	827	--	12
CALHOUN RD (STAGE 2)	810	1,026	--	24
MOORLAND RD	--	1,500	200	--
NATIONAL AVE	1,115	--	70	--
MICHELLE WITMER DR	--	60	--	--
SUBTOTALS	2,695	3,413		
TOTALS	**6,108**		**270**	**36**

3

PAVEMENT MARKING

STATION	-	STATION	LOCATION	602.0505 CURB RAMP DETECTABLE WARNING FIELD YELLOW SF	646.0106 PAVEMENT MARKING EPOXY 4-INCH WHITE LF	646.0106 PAVEMENT MARKING EPOXY 4-INCH YELLOW LF	646.0126 PAVEMENT MARKING EPOXY 8-INCH LF	647.0166 PAVEMENT MARKING ARROWS EPOXY TYPE 2 EACH	647.0176 PAVEMENT MARKING ARROWS EPOXY TYPE 3 EACH	647.0206 PAVEMENT MARKING ARROWS BIKE LANE EPOXY EACH	647.0306 PAVEMENT MARKING SYMBOLS BIKE LANE EPOXY EACH	647.0356 PAVEMENT MARKING WORDS EPOXY EACH	647.0456 PAVEMENT MARKING CURB EPOXY LF	647.0526 PAVEMENT MARKING YIELD LINE SYMBOLS EPOXY 18-INCH EACH	647.0566 PAVEMENT MARKING STOP LINE EPOXY 18-INCH LF	647.0606 PAVEMENT MARKING ISLAND NOSE EPOXY EACH	647.0726 PAVEMENT MARKING DIAGONAL 12-INCH EPOXY LF	647.0766 PAVEMENT MARKING CROSSWALK 6-INCH EPOXY LF
165+00	-	170+00	COFFEE RD	--	1,073	524	342	4	--	5	5	2	10	--	41	2	22	--
170+00	-	176+00	COFFEE RD	--	1,200	1,200	--	--	--	2	2	--	--	--	--	--	--	--
176+00	-	182+00	COFFEE RD	--	1,200	1,200	--	--	--	2	2	--	--	--	--	--	--	--
182+00	-	188+00	COFFEE RD	--	1,200	1,200	--	--	--	--	--	--	--	--	--	--	--	--
188+00	-	194+00	COFFEE RD	--	1,200	1,200	--	--	--	3	3	--	--	--	--	--	--	--
194+00	-	200+00	COFFEE RD	--	1,156	1,200	15	--	--	3	3	--	--	--	--	--	--	--
200+00	-	206+00	COFFEE RD	--	796	1,200	187	2	--	3	3	--	--	--	--	--	--	--
206+00	-	212+00	COFFEE RD	--	826	1,200	163	1	--	6	6	--	--	--	--	--	--	--
212+00	-	218+00	COFFEE RD	80	640	200	761	7	--	5	5	2	34	--	43	2	--	223
218+00	-	224+00	COFFEE RD	56	965	394	713	6	--	5	5	3	34	--	42	2	--	149
224+00	-	230+00	COFFEE RD	--	1,169	1,802	167	2	--	3	3	1	--	--	--	1	182	--
230+00	-	234+00	COFFEE RD	112	310	--	546	6	2	1	1	4	31	--	41	1	--	271
44+00	-	55+50	CALHOUN RD	--	1,997	2,932	463	4	--	--	--	4	--	--	77	--	118	--
10+25	-	10+81	ST FRANCIS DR	--	--	96	--	--	--	--	--	--	--	--	21	--	--	--
37+40	-	39+37	159TH ST	--	--	200	--	--	--	--	--	--	--	--	19	--	--	--
39+89	-	42+07	159TH ST	--	--	200	--	--	--	--	--	--	--	--	17	--	--	--
70+35	-	73+45	MONTEREY DR	--	--	200	--	--	--	--	--	--	--	--	15	--	--	--
104+50	-	107+50	MOORLAND RD	32				2	--	--	--	2	92	--	85	2	--	329
25+34	-	26+40	153RD ST	--	--	134	--	--	--	--	--	--	--	--	22	--	--	--
234+50	-	235+00	MICHELLE WITMER DR	48	--	--	--	--	--	--	--	--	34	--	49	1	--	198
108+00	-	113+50	NATIONAL AVE	--	--	829	375	3	--	--	--	1	--	20	81	--	--	295
SUBTOTALS					13,732	15,911												
TOTALS				**328**	**29,643**		**3,732**	**37**	**2**	**38**	**38**	**19**	**235**	**20**	**553**	**11**	**322**	**1,465**

ALL ITEMS ARE **CATEGORY 0010** UNLESS OTHERWISE SPECIFIED.

3

CONSTRUCTION STAKING

STATION	-	STATION	LOCATION	LENGTH LF	650.4000 CONSTRUCTION STAKING STORM SEWER EACH	650.4500 CONSTRUCTION STAKING SUBGRADE LF	650.5000 CONSTRUCTION STAKING BASE LF	650.9920 CONSTRUCTION STAKING SLOPE STAKES LF
165+00	-	233+52	COFFEE RD	7,192	74	7,192	7,192	7,192
10+26	-	10+81	ST FRANCIS DR	56	--	56	56	56
37+73	-	39+37	159TH ST	164	--	164	164	164
39+89	-	42+07	159TH ST	218	--	218	218	218
70+35	-	72+95	MONTEREY DR	260	--	260	260	260
25+25	-	26+00	153RD ST	75	--	75	75	75
TOTALS				**7,965**	**74**	**7,965**	**7,965**	**7,965**

CONSTRUCTION STAKING LUMP SUM

PROJECT ID	DESCRIPTION	650.8500 CONSTRUCTION STAKING ELECTRICAL INSTALLATIONS (2722-10-70) LS	650.9910 CONSTRUCTION STAKING SUPPLEMENTAL CONTROL (2722-10-70) LS	SPV.0105.08 CONSTRUCTION STAKING DETENTION PONDS LS
2722-10-70	COFFEE RD	1	1	1
TOTALS		**1**	**1**	**1**

CONSTRUCTION STAKING CURB RAMP

LOCATION	SPV.0060.12 CONSTRUCTION STAKING CURB RAMP EACH
COFFEE RD & MONTEREY DR	2
COFFEE RD & MOORLAND RD	12
COFFEE RD & 153RD ST	3
COFFEE RD & NATIONAL AVE	6
TOTALS	**23**

REMOVING GEODETIC SURVEY MONUMENT

STATION	OFFSET	LOCATION	SPV.0105.09 REMOVING GEODETIC SURVEY MONUMENT LS
170+39	27' LT	COFFEE RD	1
TOTAL			**1**

SAWCUTS

STATION	LOCATION	OFFSET	690.0150 SAWING ASPHALT LF	690.0250 SAWING CONCRETE LF	COMMENTS
164+99	COFFEE RD	R/L	163	--	
186+52	COFFEE RD	49' LT	33	--	DRIVEWAY
188+02	COFFEE RD	46' LT	26	--	DRIVEWAY
189+03	COFFEE RD	45' LT	34	--	DRIVEWAY
189+99	COFFEE RD	43' LT	31	--	DRIVEWAY
191+05	COFFEE RD	43' LT	--	18	DRIVEWAY
192+08	COFFEE RD	46' LT	14	--	DRIVEWAY
216+00	COFFEE RD	47' LT	25	--	DRIVEWAY
217+72	COFFEE RD	R/L	--	146	
218+61	COFFEE RD	R/L	--	156	
219+28	COFFEE RD	66' LT	11	--	DRIVEWAY
220+41	COFFEE RD	68' RT	64	--	DRIVEWAY
222+33	COFFEE RD	57' RT	28	--	DRIVEWAY
224+20	COFFEE RD	48' RT	22	--	DRIVEWAY
224+73	COFFEE RD	58' RT	--	14	DRIVEWAY
227+06	COFFEE RD	57' RT	12	--	DRIVEWAY
229+94	COFFEE RD	42' RT	18	--	DRIVEWAY
231+23	COFFEE RD	76' RT	--	21	DRIVEWAY
232+50	COFFEE RD	71' RT	82	--	DRIVEWAY
233+69	COFFEE RD	R/L	325	26	
10+81	ST FRANCIS DR	R/L	25	--	
37+40	159TH ST	R/L	36	--	
38+60	159TH ST	42' RT	--	20	DRIVEWAY
40+77	159TH ST	30' RT	20	--	DRIVEWAY
42+07	159TH ST	R/L	21	--	
71+10	MONTEREY DR	38' LT	9	--	DRIVEWAY
71+27	MONTEREY DR	29' RT	19	--	DRIVEWAY
72+97	MONTEREY DR	26' RT	28	--	DRIVEWAY
73+31	MONTEREY DR	21' LT	12	--	DRIVEWAY
73+45	MONTEREY DR	R/L	24	--	
105+50	MOORLAND RD	R/L	--	104	
106+50	MOORLAND RD	R/L	--	111	
25+68	153RD ST	23' RT	16	--	DRIVEWAY
26+40	153RD ST	R/L	34	--	
234+50	MICHELLE WITMER DR	R/L	210	5	
TOTALS			**1,342**	**621**	

ALL ITEMS ARE **CATEGORY 0010** UNLESS OTHERWISE SPECIFIED.

3

SANITARY MANHOLES

STATION	OFFSET	LOCATION	SPV.0060.15 RECONSTRUCTING SANITARY MANHOLES EACH	SPV.0060.16 ADJUSTING SANITARY MANHOLE COVERS EACH	SPV.0060.17 SANITARY MANHOLE SEAL INTERNAL EACH	PROPOSED RIM ELEVATION
221+16.21	39.4' RT	COFFEE RD	1	--	1	923.78
231+57.49	39.6' RT	COFFEE RD	--	1	1	907.50
39+98.10	1.5' RT	159TH ST	1	--	1	905.15
71+44.13	4.3' RT	MONTEREY DR	--	1	1	915.81
72+85.66	6.8' RT	MONTEREY DR	--	1	1	918.96
TOTALS		**CATEGORY 0020**	**2**	**3**	**5**	

WATER VALVES AND HYDRANTS

STATION	LOCATION	OFFSET	SPV.0060.18 ADJUSTING WATER VALVE BOXES EA	SPV.0060.19 SALVAGE AND RELOCATE HYDRANT AND VALVE EA	NOTES
222+46.19	COFFEE RD	28.4' RT	1	-	
222+59.22	COFFEE RD	42.0' RT	-	1	CONSULT NEW BERLIN UTILITIES FOR NEW LOCATION
223+98.73	COFFEE RD	27.7' RT	1	-	
225+20.72	COFFEE RD	33.0' RT	1	-	
226+69.31	COFFEE RD	29.8' RT	-	1	CONSULT NEW BERLIN UTILITIES FOR NEW LOCATION
229+16.07	COFFEE RD	26.5' RT	1	-	
231+47.06	COFFEE RD	47.1' RT	1	-	
231+50.57	COFFEE RD	33.6' RT	-	1	CONSULT NEW BERLIN UTILITIES FOR NEW LOCATION
10+49.85	ST FRANCIS DR	3.5' LT	1	-	
10+74.74	ST FRANCIS DR	7.0' LT	1	-	
39+12.93	159TH ST	12.4' RT	1	-	
40+33.36	159TH ST	14.3' RT	1	-	
70+60.11	MONTEREY DR	14.8' RT	1	-	
72+44.46	MONTEREY DR	9.5' RT	1	-	
25+49.5	153RD ST	11.6' RT	1	-	
11+23.54	NATIONAL AVE	51.4' LT	1	-	
11+30.08	NATIONAL AVE	47.3' LT	1	-	
TOTALS		**CATEGORY 0020**	**14**	**3**	

3

WATER MAIN VERTICAL OFFSET AND INSULATION

STATION	OFFSET	STATION	OFFSET	LOCATION	SPV.0060.20 WATER MAIN VERTICAL OFFSET EA	612.0902.S INSULATION BOARD POLYSTYRENE 2-INCH SY	NOTES
202+31	R/L			COFFEE RD	1	7	12" PVC PIPE
206+71	6' RT			COFFEE RD	1	7	12" PVC PIPE
218+30	20' LT	291+50	25' RT	COFFEE RD	--	40	
221+60	28' RT	221+80	28' RT	COFFEE RD	--	7	
227+15	29'RT	228+00	29' RT	COFFEE RD	--	30	
229+55	28' RT	229+75	28' RT	COFFEE RD	--	7	
229+60	5' LT	229+60	28' RT	COFFEE RD	--	8	
232+95	30' LT	233+15	44' LT	COFFEE RD	--	7	
37+45	10' RT			159TH ST	1	7	12" PVC PIPE
39+57	12' RT			159TH ST	1	7	8" PVC PIPE
TOTALS				**CATEGORY 0020**	**4**	**127**	

TEST ROLLING

STATION	-	STATION	DESCRIPTION	SPV.0170.01 TEST ROLLING STA
164+98.95	-	217+72.38	COFFEE RD	53
218+60.69	-	233+69.14	COFFEE RD	16
10+25.00	-	10+81.45	ST FRANCIS DR	1
37+40.00	-	39+37.12	159TH ST (SOUTH)	2
39+89.16	-	42+07.65	159TH ST (NORTH)	3
70+34.80	-	73+45.00	MONTEREY DR	4
25+34.00	-	26+40.00	153RD ST	2
		TOTAL		**81**

ALL ITEMS ARE **CATEGORY 0010** UNLESS OTHERWISE SPECIFIED.

3

LIGHTING AND MISCELLANEOUS

DESCRIPTION	LOCATION	653.0135* PULL BOXES STEEL 24x36-INCH EACH	655.0610* ELECTRICAL WIRE LIGHTING 12 AWG LF	659.0802 PLAQUES SEQUENCE IDENTIFICATION EACH	SPV.0060.09 CONCRETE BASES TYPE 5 MODIFIED EACH	SPV.0060.10 DECORATIVE POLE, ARM, LUMINAIRE LED EACH	REMARKS
ACR6	STA 219+04.40, 45.1' RT	--	95	1	1	1	
PB-CR2	STA 219+10.00, 46.0' RT	1	--	--	--	--	
ACR5	STA 219+84.06, 45.7' RT	--	95	1	1	1	
ACR4	STA 220+63.70, 44.9' RT	--	95	1	1	1	
ACR3	STA 221+37.42, 41.5' RT	--	95	1	1	1	
ACR2	STA 222+11.04, 37.7' RT	--	95	1	1	1	
ACR1	STA 222+85.11, 34.3' RT	--	95	1	1	1	
PB-CR1	STA 223+29.33, 33.7' RT	1	--	--	--	--	
BCR1	STA 223+64.44, 33.6' RT	--	95	1	1	1	
BCR2	STA 224+38.25, 33.4' RT	--	95	1	1	1	
BCR3	STA 225+17.82, 37.8' RT	--	95	1	1	1	
BCR4	STA 225+97.64, 38.3' RT	--	95	1	1	1	
BCR5	STA 226+77.81, 37.9' RT	--	95	1	1	1	
BCR6	STA 227+57.10, 38.4' RT	--	95	1	1	1	
BCR7	STA 228+36.75. 38.1' RT	--	95	1	1	1	
BCR8	STA 228+97.66, 37.9' RT	--	95	1	1	1	
BCR9	STA 229+77.24, 37.5' RT	--	95	1	1	1	
BCR10	STA 230+56.92, 44.3' RT	--	95	1	1	1	
BCR11	STA 231+39.21, 49.1' RT	--	95	1	1	1	
BCR12	STA 232+26.08, 49.1' RT	--	95	1	1	1	
BCR13	STA 233+22.46, 50.4' RT	--	95	1	1	1	
BCR14	STA 109+44.72, 48.8' LT	--	95	1	1	1	
TOTALS		**2**	**1,900**	**20**	**20**	**20**	

* ADDITIONAL QUANTITIES LISTED ELSEWHERE

WIRING AND CONDUIT

FROM	TO	652.0225* CONDUIT RIGID NONMETALLIC SCHEDULE 40 2 -INCH LF	652.0235* CONDUIT RIGID NONMETALLIC SCHEDULE 40 3 -INCH LF	655.0625 ELECTRICAL WIRE LIGHTING 6 AWG LF	REMARKS
STA 218+99.96, 44.8' RT	STA 219+02.90, 47.0' LT	97	--	--	EMPTY
PB-CR2	PB-CR1	459	--	--	EMPTY
ACR6	STUB	25	--	--	EMPTY
ACR6	ACR5	85	--	552	
ACR5	ACR4	86	--	558	
ACR4	ACR3	81	--	528	
ACR3	ACR2	81	--	--	
ACR2	ACR1	76	--	498	
ACR1	PB-CR1	50	--	342	
PB-CR1	CR DIST CENTER	--	60	444	2 RACEWAYS
PB-CR1	BCR1	40	--	282	
BCR1	BCR2	81	--	528	
BCR2	BCR3	87	--	564	
BCR3	BCR4	85	--	552	
BCR4	BCR5	86	--	558	
BCR5	BCR6	85	--	552	
BCR6	BCR7	86	--	558	
BCR7	BCR8	87	--	564	
BCR8	BCR9	85	--	552	
BCR9	BCR10	86	--	558	
BCR10	BCR11	85	--	552	
BCR11	BCR12	79	--	516	
BCR12	BCR13	87	--	564	
BCR13	BCR14	68	--	450	
BCR14	STUB	15	--	--	EMPTY
STA 232+73.04, 48.8' RT	STA 232+89.24, 37.9' LT	93	--	--	EMPTY
TOTALS		**2,275**	**60**	**10,272**	

* ADDITIONAL QUANTITIES LISTED ELSEWHERE

3

LIGHTING DISTRIBUTION

DESCRIPTION	LOCATION	654.0217* CONCRETE CONTROL CABINET BASES TYPE 9 SPECIAL EACH	656.0200.03 ELECTRIC SERVICE METER BREAKER PEDESTAL CR LS	659.0802 PLAQUES SEQUENCE IDENTIFICATION EACH	SPV.0060.11 LIGHTING DISTRIBUTION CENTER 120/240V EACH	REMARKS
CR DISTRIBUTION CENTER	STA 223+29.16, 46.3' RT	1	1	1	1	120/240V, 1 PHASE, 100A, ISOLATED NEUTRAL
TOTALS		**1**	**1**	**1**	**1**	

* ADDITIONAL QUANTITIES LISTED ELSEWHERE

ALL ITEMS ARE **CATEGORY 0010** UNLESS OTHERWISE SPECIFIED.

3

NON-METALLIC CONDUIT

LOCATION	LOCATION	652.0225 CONDUIT RIGID NONMETALLIC SCHEDULE 40 2-INCH L.F.	652.0235 CONDUIT RIGID NONMETALLIC SCHEDULE 40 3-INCH L.F.	652.0615 CONDUIT SPECIAL 3-INCH L.F.
COFFEE AT CALHOUN	PB1-PB2	-	60	-
	PB2-PB3	280	-	-
	PB2-SB1	20	-	-
	PB2-PB4	-	110	-
	PB4-PB5	-	80	-
	PB5-SB2	20	-	-
	PB5-PB6	-	80	-
	PB6-PB7	25	-	-
	PB6-SB3	15	-	-
	PB6-PB9	-	-	190
	PB9-SB4	10	-	-
	PB10-SB5	30	-	-
SUBTOTAL		400	330	190
COFFEE AT MOORLAND	CB1-PB1	-	60	-
	PB1-SB1	15	-	-
	PB1-PB2	-	110	-
	PB2-SB2	-	10	-
	PB2-PB3	-	70	-
	PB3-SB3	-	10	-
	PB3-PB4	-	110	-
	PB4-SB4	20	-	-
	PB4-PB5	-	-	110
	PB5-SB5	-	25	-
	PB5-PB6	-	-	100
	PB6-SB6	-	10	-
	PB6-SB7	20	-	-
	PB6-PB7	-	110	-
	PB7-SB8	20	-	-
	PB7-PB8	-	110	-
	PB8-SB9	-	20	-
	PB8-PB9	-	80	-
	PB9-SB10	-	20	-
	PB9-PB10	-	120	-
	PB10-SB11	20	-	-
	PB10-PB11	-	-	120
	PB11-SB12	-	25	-
	PB11-PB12	-	-	90
	PB12-SB13	-	10	-
	PB12-SB14	20	-	-
	PB12-CB1	-	120	-
SUBTOTAL		115	1,020	420
COFFEE AT NATIONAL	PB1-PB2	-	50	-
	PB2-SB1	20	-	-
	PB2-SB2	-	15	-
	PB2-SB3	10	-	-
	PB5-EXT1	-	10	-
	PB5-SB6	-	15	-
	PB5-SB7	35	-	-
	PB5-PB6	-	120	-
	PB6-SB8	10	-	-
	PB6-PB7	-	190	-
SUBTOTAL		75	400	0
TOTAL		590	1,750	610

PULL BOXES

LOCATION		PB NO.	(1) STATION	(1) OFFSET	653.0135 PULLBOXES STEEL 24X36-INCH EACH	653.0140 PULLBOXES STEEL 24X42-INCH EACH	653.0905 REMOVING PULL BOXES EACH
COFFEE AT CALHOUN		PB2	165+62.0	43.2 LT	-	1	-
		PB3	168+34.4	31.7 LT	1	-	-
		PB4	165+62.7	10.4 RT	-	1	-
		PB5	165+63.4	46.1 RT	-	1	-
		PB6	48+52.7	52.8 RT	-	1	-
		PB7	48+32.0	37.5 RT	1	-	-
SUBTOTAL					2	4	0
COFFEE AT MOORLAND		PB1	217+32.1	46.8 RT	-	1	-
		PB2	217+32.8	6.9 LT	-	1	-
		PB3	217+33.4	40.5 LT	-	1	-
		PB4	217+67.7	83.3 LT	-	1	-
		PB5	218+23.3	82.5 LT	-	1	-
		PB6	218+71.8	81.9 LT	-	1	-
		PB7	219+07.5	46.6 LT	-	1	-
		PB8	219+07.5	6.9 RT	-	1	-
		PB9	219+07.5	45.1 RT	-	1	-
		PB10	218+65.4	85.1 RT	-	1	-
		PB11	218+06.8	84.6 RT	-	1	-
		PB12	217+62.3	83.6 RT	-	1	-
	(EXISTING)	PB1	FIELD	LOCATE	-	-	1
	(EXISTING)	PB2	FIELD	LOCATE	-	-	1
	(EXISTING)	PB3	FIELD	LOCATE	-	-	1
	(EXISTING)	PB4	FIELD	LOCATE	-	-	1
	(EXISTING)	PB5	FIELD	LOCATE	-	-	1
	(EXISTING)	PB6	FIELD	LOCATE	-	-	1
	(EXISTING)	PB7	FIELD	LOCATE	-	-	1
	(EXISTING)	PB8	FIELD	LOCATE	-	-	1
	(EXISTING)	PB9	FIELD	LOCATE	-	-	1
	(EXISTING)	PB10	FIELD	LOCATE	-	-	1
	(EXISTING)	PB11	FIELD	LOCATE	-	-	1
	(EXISTING)	PB12	FIELD	LOCATE	-	-	1
	(EXISTING)	PB13	FIELD	LOCATE	-	-	1
	(EXISTING)	PB14	FIELD	LOCATE	-	-	1
SUBTOTAL					0	12	14
COFFEE AT NATIONAL		PB1	110+97.4	90.0 LT	-	1	-
		PB2	110+95.0	46.0 LT	-	1	-
		PB5	109+48.3	40.0 LT	-	1	-
		PB6	109+94.4	72.2 LT	-	1	-
		PB7	110+86.7	94.4 LT	-	1	-
	(EXISTING)	PB1	FIELD	LOCATE	-	-	1
	(EXISTING)	PB2	FIELD	LOCATE	-	-	1
	(EXISTING)	PB3	FIELD	LOCATE	-	-	1
	(EXISTING)	PB4	FIELD	LOCATE	-	-	1
	(EXISTING)	PB6	FIELD	LOCATE	-	-	1
	(EXISTING)	PB7	FIELD	LOCATE	-	-	1
	(EXISTING)	PB9	FIELD	LOCATE	-	-	1
	(EXISTING)	PB10	FIELD	LOCATE	-	-	1
	(EXISTING)	PB11	FIELD	LOCATE	-	-	1
	(EXISTING)	PB12	FIELD	LOCATE	-	-	1
	(EXISTING)	PB13	FIELD	LOCATE	-	-	1
	(EXISTING)	PB14	FIELD	LOCATE	-	-	1
	(EXISTING)	PB15	FIELD	LOCATE	-	-	1
SUBTOTAL					0	5	13
TOTAL					2	21	27

(1) STATION/OFFSET ARE APPROXIMATE

3

SHEET 1 OF 7

CONCRETE BASES

LOCATION	SB NO.	(1) STATION	(1) OFFSET	204.0195 REMOVING CONCRETE BASES EACH	654.0101 CONCRETE BASES TYPE 1 EACH	654.0102 CONCRETE BASES TYPE 2 EACH	SPV.0060.04 CONCRETE BASES TYPE 10 CONTRACTOR SUPPLIED ANCHOR BOLTS & ANCHOR ROD TEMPLATE EACH	SPV.0060.05 CONCRETE BASES TYPE 13 CONTRACTOR SUPPLIED ANCHOR BOLTS & ANCHOR ROD TEMPLATE EACH	654.0217 CONCRETE CONTROL CABINET BASES TYPE 9 SPECIAL EACH
COFFEE AT CALHOUN	SB1	165+44.3	40.6 LT	-	1	-	-	-	-
	SB2	165+47.5	40.8 RT	-	-	1	-	-	-
	SB3	48+44.5	37.8 RT	-	1	-	-	-	-
	SB4	48+34.2	33.0 LT	-	-	1	-	-	-
	SB5	164+14.4	49.0 RT	-	1	-	-	-	-
SUBTOTAL				0	3	2	0	0	0
COFFEE AT MOORLAND	CB1	217+46.6	61.6 RT	-	-	-	-	-	1
	SB1	217+44.3	47.2 RT	-	1	-	-	-	-
	SB2	217+45.3	7.2 LT	-	-	1	-	-	-
	SB3	217+44.3	41.6 LT	-	-	-	1	-	-
	SB4	217+63.5	62.9 LT	-	1	-	-	-	-
	SB5	218+23.1	61.3 LT	-	-	1	-	-	-
	SB6	218+69.8	74.2 LT	-	-	-	-	1	-
	SB7	218+71.9	65.2 LT	-	1	-	-	-	-
	SB8	218+90.2	48.0 LT	-	1	-	-	-	-
	SB9	218+88.0	7.0 RT	-	-	1	-	-	-
	SB10	218+88.0	46.3 RT	-	-	-	1	-	-
	SB11	218+66.0	66.5 RT	-	1	-	-	-	-
	SB12	218+10.1	64.1 RT	-	-	1	-	-	-
	SB13	217+63.4	74.7 RT	-	-	-	-	1	-
	SB14	217+59.4	63.7 RT	-	1	-	-	-	-
(EXISTING)	SB1	FIELD	LOCATE	1	-	-	-	-	-
(EXISTING)	SB2	FIELD	LOCATE	1	-	-	-	-	-
(EXISTING)	SB3	FIELD	LOCATE	1	-	-	-	-	-
(EXISTING)	SB4	FIELD	LOCATE	1	-	-	-	-	-
(EXISTING)	SB5	FIELD	LOCATE	1	-	-	-	-	-
(EXISTING)	SB6	FIELD	LOCATE	1	-	-	-	-	-
(EXISTING)	SB7	FIELD	LOCATE	1	-	-	-	-	-
(EXISTING)	SB8	FIELD	LOCATE	1	-	-	-	-	-
(EXISTING)	SB9	FIELD	LOCATE	1					
(EXISTING)	SB10	FIELD	LOCATE	1	-	-	-	-	-
SUBTOTAL				10	6	4	2	2	1
COFFEE AT NATIONAL	CB1	110+98.7	97.3 LT	-	-	-	-	-	1
	SB1	110+81.7	55.2 LT	-	1	-	-	-	-
	SB2	110+79.2	40.7 LT	-	-	1	-	-	-
	SB3	110+90.0	39.7 LT	-	1	-	-	-	-
	SB6	109+62.7	44.3 LT	-	-	1	-	-	-
	SB7	109+78.7	52.9 LT	-	1	-	-	-	-
	SB8	109+92.6	63.3 LT	-	1	-	-	-	-
(EXISTING)	SB1	FIELD	LOCATE	1	-	-	-	-	-
(EXISTING)	SB4	FIELD	LOCATE	1	-	-	-	-	-
(EXISTING)	SB5	FIELD	LOCATE	1	-	-	-	-	-
SUBTOTAL				3	4	2	0	0	1
TOTAL				13	13	8	2	2	2

(1) STATION/OFFSET ARE APPROXIMATE

3

TRAFFIC SIGNAL CABLE

LOCATION	LOCATION	655.0220 CABLE TRAFFIC SIGNAL 4-14 AWG L.F.	655.0230 CABLE TRAFFIC SIGNAL 5-14 AWG L.F.	655.0240 CABLE TRAFFIC SIGNAL 7-14 AWG L.F.	655.0260 CABLE TRAFFIC SIGNAL 12-14 AWG L.F.	655.0270 CABLE TRAFFIC SIGNAL 15-14 AWG L.F.	655.0290 CABLE TRAFFIC SIGNAL 21-14 AWG L.F.
COFFEE AT CALHOUN	CB1-SB1	-	-	-	105	-	-
	CB1-SB2	-	-	-	200	-	-
	CB1-SB3	-	-	-	235	-	-
	CB1-SB4	-	-	-	325	-	-
	CB1-SB5	-	-	-	330	-	-
	CB1-SB6	-	-	-	205	-	-
	CB1-SB7	-	-	-	175	-	-
	CB1-SB8	-	-	-	95	-	-
	SB1-HEAD 2	-	-	20	-	-	-
	SB1-HEAD 5	-	20	-	-	-	-
	SB2-HEAD 3	-	-	35	-	-	-
	SB2-HEAD 4	-	20	-	-	-	-
	SB3-HEAD 10	-	-	20	-	-	-
	SB3-HEAD 12	-	20	-	-	-	-
	SB4-HEAD 11	-	-	35	-	-	-
	SB5-HEAD 1	-	20	-	-	-	-
	SB5-HEAD 6	-	-	20	-	-	-
	SB6 HEAD 7	-	-	35	-	-	-
	SB6-HEAD 8	-	20	-	-	-	-
	SB7 HEAD 9	-	20	-	-	-	-
	SB7 - HEAD 13	-	-	20	-	-	-
	SB8 - HEAD 14	-	-	35	-	-	-
SUBTOTAL		0	120	220	1,670	0	0
COFFEE AT MOORLAND	CB1-SB1	-	-	-	80	-	-
	CB1-SB2	-	-	-	130	-	-
	CB1-SB3	-	-	-	165	-	-
	CB1-SB4	-	-	-	230	-	-
	CB1-SB5	-	-	-	290	-	-
	CB1-SB6	-	-	-	325	-	-
	CB1-SB7	-	-	-	335	-	-
	CB1-SB8	-	-	-	365	-	-
	CB1-SB9	-	-	-	310	-	-
	CB1-SB10	-	-	-	270	-	-
	CB1-SB11	-	-	-	210	-	-
	CB1-SB12	-	-	-	155	-	-
	CB1-SB13	-	-	-	95	-	-
	CB1-SB14	-	-	-	105	-	-
	SB1-HEAD 11	-	20	-	-	-	-
	SB1-HEAD 23	20	-	-	-	-	-
	SB2-HEAD 15	-	-	20	-	-	-
	SB2-HEAD 19	-	-	20	-	-	-
	SB3-HEAD 17	-	45	-	-	-	-
	SB3-HEAD 18	-	45	-	-	-	-
	SB3-HEAD 28	20	-	-	-	-	-
	SB4-HEAD 6	-	20	-	-	-	-
	SB4-HEAD 21	20	-	-	-	-	-
	SB5-HEAD 4	-	-	20	-	-	-
	SB5-HEAD 10	-	-	20	-	-	-
	SB6-HEAD 2	-	55	-	-	-	-
	SB6-HEAD 3	-	45	-	-	-	-
	SB7-HEAD 26	20	-	-	-	-	-
	SB8-HEAD 16	-	20	-	-	-	-
	SB8-HEAD 27	20	-	-	-	-	-
	SB9-HEAD 14	-	-	20	-	-	-
	SB9-HEAD 20	-	-	20	-	-	-
	SB10-HEAD 12	-	55	-	-	-	-
	SB10-HEAD 13	-	45	-	-	-	-
	SB10-HEAD 24	20	-	-	-	-	-
	SB11-HEAD 1	-	20	-	-	-	-
	SB11-HEAD 25	20	-	-	-	-	-
	SB12-HEAD 5	-	-	20	-	-	-
	SB12-HEAD 9	-	-	20	-	-	-
	SB13-HEAD 7	-	55	-	-	-	-
	SB13-HEAD 8	-	45	-	-	-	-
	SB14-HEAD 22	20	-	-	-	-	-
SUBTOTAL		160	470	160	3,065	0	0

TRAFFIC SIGNAL CABLE - CONTINUED

LOCATION	LOCATION	655.0220 CABLE TRAFFIC SIGNAL 4-14 AWG L.F.	655.0230 CABLE TRAFFIC SIGNAL 5-14 AWG L.F.	655.0240 CABLE TRAFFIC SIGNAL 7-14 AWG L.F.	655.0260 CABLE TRAFFIC SIGNAL 12-14 AWG L.F.	655.0270 CABLE TRAFFIC SIGNAL 15-14 AWG L.F.	655.0290 CABLE TRAFFIC SIGNAL 21-14 AWG L.F.
COFFEE AT NATIONAL	CB1-SB1	-	-	125	-	-	-
	CB1-SB2	-	-	-	-	120	-
	CB1-SB3	-	-	115	-	-	-
	CB1-SB4	-	-	-	-	-	215
	CB1-SB5	-	-	-	-	-	290
	CB1-SB6	-	-	-	230	-	-
	CB1-SB7	-	-	250	-	-	-
	CB1-SB8	-	-	-	-	165	-
	SB1-HEAD 14	20	-	-	-	-	-
	SB2-HEAD 3	-	-	20	-	-	-
	SB2-HEAD 11	-	-	45	-	-	-
	SB2-HEAD 20	20	-	-	-	-	-
	SB3-HEAD 4	-	20	-	-	-	-
	SB4- HEAD 2	-	-	35	-	-	-
	SB4-HEAD 9	-	-	20	-	-	-
	SB4-HEAD 10	-	20	-	-	-	-
	SB4-HEAD 17	20	-	-	-	-	-
	SB4-HEAD 19	20	-	-	-	-	-
	SB5-HEAD 1	-	20	-	-	-	-
	SB5-HEAD 6	-	-	20	-	-	-
	SB5-HEAD 8	-	-	35	-	-	-
	SB5-HEAD 15	20	-	-	-	-	-
	SB5-HEAD 18	20	-	-	-	-	-
	SB6-HEAD 5	-	-	45	-	-	-
	SB7-HEAD 13	20	-	-	-	-	-
	SB8-HEAD 7	-	20	-	-	-	-
	SB8-HEAD 12	-	-	20	-	-	-
	SB8-HEAD 16	20	-	-	-	-	-
SUBTOTAL		160	80	730	230	285	505
TOTAL		320	670	1,110	4,965	285	505

3

SHEET 3 OF 7

SIGNAL FACES

LOCATION	SB NO.	HEAD NO.	658.0110 TRAFFIC SIGNAL FACES 3-12 INCH VERTICAL R-Y-G EACH	658.0110 TRAFFIC SIGNAL FACES 3-12 INCH VERTICAL <-R<-Y<-FY EACH	658.0115 TRAFFIC SIGNAL FACES 4-12 INCH VERTICAL <-R<-Y<-FY<-G EACH	658.0120 TRAFFIC SIGNAL FACES, 5-12 INCH VERTICAL R-Y-G<-Y<-G EACH	658.0155 TRAFFIC SIGNAL FACES, 3-12 INCH HORIZONTAL R-Y-G EACH	658.0165 TRAFFIC SIGNAL FACES, 5-12 INCH HORIZONTAL R-Y<-Y<-G-G EACH	658.0215 BACKPLATES SIGNAL FACE 3-SECTION 12-INCH EACH	658.0220 BACKPLATES SIGNAL FACE 4-SECTION 12-INCH EACH	658.0225 BACKPLATES, SIGNAL FACE 5-SECTION 12-INCH EACH	658.0416 PEDESTRIAN SIGNAL FACES 16-INCH EACH	658.0600 LED MODULES 12-INCH RED BALL EACH	658.0605 LED MODULES 12-INCH YELLOW BALL EACH	658.0610 LED MODULES 12-INCH GREEN BALL EACH	658.0615 LED MODULES 12-INCH RED ARROW EACH	658.0620 LED MODULES 12-INCH YELLOW ARROW EACH	658.0625 LED MODULES 12-INCH GREEN ARROW EACH	658.0635 LED MODULES PEDESTRIAN COUNTDOWN TIMER 16-INCH EACH
COFFEE AT CALHOUN	SB1	2	1	-	-	-	-	-	1	-	-	-	1	1	1	-	-	-	-
		5	1	-	-	-	-	-	1	-	-	-	1	1	1	-	-	-	-
	SB2	3	-	-	-	-	1	-	1	-	-	-	1	1	1	-	-	-	-
		4	1	-	-	-	-	-	1	-	-	-	1	1	1	-	-	-	-
	SB3	12	1	-	-	-	-	-	1	-	-	-	1	1	1	-	-	-	-
		10	-	-	-	1	-	-	-	-	1	-	1	1	1	-	1	1	-
	SB4	11	-	-	-	1	-	-	-	-	1	-	1	1	1	-	1	1	-
	SB5	1	1	-	-	-	-	-	1	-	-	-	1	1	1	-	-	-	-
		6	1	-	-	-	-	-	1	-	-	-	1	1	1	-	-	-	-
	SB6	7	-	-	-	-	EXISTING	-	EXISTING	-	-	-	EXISTING	EXISTING	EXISTING	-	-	-	-
		8	1	-	-	-	-	-	1	-	-	-	1	1	1	-	-	-	-
	SB7	13	EXISTING	-	-	-	-	-	EXISTING	-	-	-	EXISTING	EXISTING	EXISTING	-	-	-	-
		9	EXISTING	-	-	-	-	-	EXISTING	-	-	-	EXISTING	EXISTING	EXISTING	-	-	-	-
	SB8	14	-	-	-	-	EXISTING	-	EXISTING	-	-	-	EXISTING	EXISTING	EXISTING	-	-	-	-
SUBTOTAL			7	0	0	2	1	0	8	0	2	0	10	10	10	0	2	2	0
COFFEE AT MOORLAND	SB1	11	1	-	-	-	-	-	1	-	-	-	1	1	1	-	-	-	-
		23	-	-	-	-	-	-	-	-	-	1	-	-	-	-	-	-	1
	SB2	15	-	1	-	-	-	-	1	-	-	-	-	-	-	1	2	-	-
		19	-	1	-	-	-	-	1	-	-	-	-	-	-	1	2	-	-
	SB3	17	1	-	-	-	-	-	1	-	-	-	1	1	1	-	-	-	-
		18	1	-	-	-	-	-	1	-	-	-	1	1	1	-	-	-	-
		28	-	-	-	-	-	-	-	-	-	1	-	-	-	-	-	-	1
	SB4	6	1	-	-	-	-	-	1	-	-	-	1	1	1	-	-	-	-
		21	-	-	-	-	-	-	-	-	-	1	-	-	-	-	-	-	1
	SB5	4	-	-	1	-	-	-	-	1	-	-	-	-	-	1	2	1	-
		10	-	-	1	-	-	-	-	1	-	-	-	-	-	1	2	1	-
	SB6	2	1	-	-	-	-	-	1	-	-	-	1	1	1	-	-	-	-
		3	1	-	-	-	-	-	1	-	-	-	1	1	1	-	-	-	-
	SB7	26	-	-	-	-	-	-	-	-	-	1	-	-	-	-	-	-	1
	SB8	16	1	-	-	-	-	-	1	-	-	-	1	1	1	-	-	-	-
		27	-	-	-	-	-	-	-	-	-	1	-	-	-	-	-	-	1
	SB9	14	-	1	-	-	-	-	1	-	-	-	-	-	-	1	2	-	-
		20	-	1	-	-	-	-	1	-	-	-	-	-	-	1	2	-	-
	SB10	12	1	-	-	-	-	-	1	-	-	-	1	1	1	-	-	-	-
		13	1	-	-	-	-	-	1	-	-	-	1	1	1	-	-	-	-
		24	-	-	-	-	-	-	-	-	-	1	-	-	-	-	-	-	1
	SB11	1	1	-	-	-	-	-	1	-	-	-	1	1	1	-	-	-	-
		25	-	-	-	-	-	-	-	-	-	1	-	-	-	-	-	-	1
	SB12	5	-	-	1	-	-	-	-	1	-	-	-	-	-	1	2	1	-
		9	-	-	1	-	-	-	-	1	-	-	-	-	-	1	2	1	-
	SB13	7	1	-	-	-	-	-	1	-	-	-	1	1	1	-	-	-	-
		8	1	-	-	-	-	-	1	-	-	-	1	1	1	-	-	-	-
	SB14	22	-	-	-	-	-	-	-	-	-	1	-	-	-	-	-	-	1
SUBTOTAL			12	4	4	0	0	0	16	4	0	8	12	12	12	8	16	4	8

SIGNAL FACES - CONTINUED

LOCATION	SB NO.	HEAD NO.	658.0110 TRAFFIC SIGNAL FACES 3-12 INCH VERTICAL R-Y-G EACH	658.0110 TRAFFIC SIGNAL FACES 3-12 INCH VERTICAL <-R<-Y<-FY EACH	658.0115 TRAFFIC SIGNAL FACES 4-12 INCH VERTICAL <-R<-Y<-FY<-G EACH	658.0120 TRAFFIC SIGNAL FACES, 5-12 INCH VERTICAL R-Y-G<-Y<-G EACH	658.0155 TRAFFIC SIGNAL FACES, 3-12 INCH HORIZONTAL R-Y-G EACH	658.0165 TRAFFIC SIGNAL FACES, 5-12 INCH HORIZONTAL R-Y<-Y<-G-G EACH	658.0215 BACKPLATES SIGNAL FACE 3-SECTION 12-INCH EACH	658.0220 BACKPLATES SIGNAL FACE 4-SECTION 12-INCH EACH	658.0225 BACKPLATES, SIGNAL FACE 5-SECTION 12-INCH EACH	658.0416 PEDESTRIAN SIGNAL FACES 16-INCH EACH	658.0600 LED MODULES 12-INCH RED BALL EACH	658.0605 LED MODULES 12-INCH YELLOW BALL EACH	658.0610 LED MODULES 12-INCH GREEN BALL EACH	658.0615 LED MODULES 12-INCH RED ARROW EACH	658.0620 LED MODULES 12-INCH YELLOW ARROW EACH	658.0625 LED MODULES 12-INCH GREEN ARROW EACH	658.0635 LED MODULES PEDESTRIAN COUNTDOWN TIMER 16-INCH EACH
COFFEE AT NATIONAL	SB1	14	-	-	-	-	-	-	-	-	-	1	-	-	-	-	-	-	1
	SB2	3	-	-	-	1	-	-	-	-	1	-	1	1	1	-	1	1	-
		11	-	-	-	-	-	1	-	-	1	-	1	1	1	-	1	1	-
		20	-	-	-	-	-	-	-	-	-	1	-	-	-	-	-	-	1
	SB3	4	1	-	-	-	-	-	1	-	-	-	1	1	1	-	-	-	-
	SB4	2	-	-	-	-	-	1	-	-	1	-	1	1	1	-	1	1	-
		9	-	-	-	1	-	-	-	-	1	-	1	1	1	-	1	1	-
		10	1	-	-	-	-	-	1	-	-	-	1	1	1	-	-	-	-
		17	-	-	-	-	-	-	-	-	-	1	-	-	-	-	-	-	1
		19	-	-	-	-	-	-	-	-	-	1	-	-	-	-	-	-	1
	SB5	1	1	-	-	-	-	-	1	-	-	-	1	1	1	-	-	-	-
		6	-	-	-	1	-	-	-	-	1	-	1	1	1	-	1	1	-
		8	-	-	-	-	-	1	-	-	1	-	1	1	1	-	1	1	-
		17	-	-	-	-	-	-	-	-	-	1	-	-	-	-	-	-	1
		18	-	-	-	-	-	-	-	-	-	1	-	-	-	-	-	-	1
	SB6	5	-	-	-	-	-	1	-	-	1	-	1	1	1	-	1	1	-
	SB7	13	-	-	-	-	-	-	-	-	-	1	-	-	-	-	-	-	1
	SB8	7	1	-	-	-	-	-	1	-	-	-	1	1	1	-	-	-	-
		12	-	-	-	1	-	-	-	-	1	-	1	1	1	-	1	1	-
		16	-	-	-	-	-	-	-	-	-	1	-	-	-	-	-	-	1
SUBTOTAL			4	0	0	4	0	4	4	0	8	8	12	12	12	0	8	8	8
TOTAL			23	4	4	6	1	4	28	4	10	16	34	34	34	8	26	14	16

TRAFFIC DETECTOR LOOPS

LOCATION	LOOP NO.	HOME RUN PB	(1) STATION	(1) OFFSET	SIZE	NO. TURNS	PAVEMENT TYPE	SDD INSTALLATION REFERENCE	652.0800 CONDUIT LOOP DETECTOR LF	655.0700 LOOP DETECTOR LEAD IN CABLE LF	655.0800 LOOP DETECTOR WIRE LF
COFFEE AT CALHOUN	21	PB3	168+34.3	12.5 LT	6 X 6	5	ASPHALT	LOOP DETECTOR INSTALLED IN BASE COURSE WITH PULL (SPLICE) BOX OFF ROADWAY (OPTION 2)	54	335	284
	22	PB4	165+66.5	12.0 LT	6 X 20	3	ASPHALT	LOOP DETECTOR INSTALLED IN BASE COURSE WITH PULL (SPLICE) BOX OFF ROADWAY (OPTION 2)	92	110	290
	23	PB4	165+38.5	12.0 LT	6 X 20	3	ASPHALT	LOOP DETECTOR INSTALLED IN BASE COURSE WITH PULL (SPLICE) BOX OFF ROADWAY (OPTION 2)	92	110	290
	24	PB4	165+66.5	0.0 CL	6 X 20	3	ASPHALT	LOOP DETECTOR INSTALLED IN BASE COURSE WITH PULL (SPLICE) BOX OFF ROADWAY (OPTION 2)	68	110	214
	25	PB4	165+38.5	0.0 CL	6 X 20	3	ASPHALT	LOOP DETECTOR INSTALLED IN BASE COURSE WITH PULL (SPLICE) BOX OFF ROADWAY (OPTION 2)	68	110	214
	41	PB16	EXISTING		- X -	-	-	EXISTING TO REMAIN	-	335	-
	61	PB11	EXISTING		- X -	-	-	EXISTING TO REMAIN	-	530	-
	62	PB10	EXISTING		- X -	-	-	EXISTING TO REMAIN	-	270	-
	63	PB10	EXISTING		- X -	-	-	EXISTING TO REMAIN	-	270	-
	64	PB10	EXISTING		- X -	-	-	EXISTING TO REMAIN	-	270	-
	65	PB10	EXISTING		- X -	-	-	EXISTING TO REMAIN	-	270	-
	71	PB15	EXISTING		- X -	-	-	EXISTING TO REMAIN	-	155	-
	81	PB8	EXISTING		- X -	-	-	EXISTING TO REMAIN	-	400	-
TOTAL									374	3,275	1,292

(1) FINAL LOCATION TO BE DETERMINED BY ENGINEER IN FIELD
LOCATION IS TO FRONT CENTER OF DETECTOR LOOP

3

PULL BOX BONDING JUMPERS

LOCATION	LOCATION	655.0515 * ELECTRICAL WIRE TRAFFIC SIGNALS 10 AWG (GREEN) L.F.
COFFEE AT CALHOUN	CB1-PB1	30
	SB1-PB2	35
	SB2-PB4	75
	SB2-PB5	35
	SB3-PB6	30
	SB4-PB9	25
	SB5-PB10	45
	SB6-PB12	45
	SB6-PB13	25
	SB7-PB14	25
	SB8-PB17	25
SUBTOTAL		395
COFFEE AT MOORLAND	CB1-PB1	35
	SB2-PB2	25
	SB3-PB3	25
	SB4-PB4	35
	SB5-PB5	40
	SB6-PB6	25
	SB8-PB7	35
	SB9-PB8	35
	SB10-PB9	35
	SB11-PB10	35
	SB12-PB11	40
	CB1-PB12	55
SUBTOTAL		420
COFFEE AT NATIONAL	CB1-PB1	25
	SB2-PB2	30
	SB4-PB3	35
	SB5-PB4	35
	SB6-PB5	30
	SB8-PB6	25
	CB1-PB7	30
SUBTOTAL		210
TOTAL		1,025

* ADDITIONAL QUANTITIES SHOWN ELSEWHERE

LIGHTING ELECTRICAL WIRE

LOCATION	LOCATION	655.0305 CABLE TYPE UF, 2-12 AWG GROUNDED L.F.	655.0610 ELECTRICAL WIRE, LIGHTING, 12 AWG L.F.
COFFEE AT CALHOUN	CB1-SB2	205	-
	SB2-LUMINAIRE 1	-	120
	SB2-SB4	155	-
	SB4-LUMINAIRE 1	10+45	120
	CB1-SB8	100	-
	SB8-LUMINAIRE 1	-	120
	SB8-SB6	180	-
	SB6-LUMINAIRE 1	-	120
SUBTOTAL		640	480
COFFEE AT MOORLAND	CB1-SB2	130	-
	SB2-LUMINAIRE 1	-	120
	SB2-LUMINAIRE 2	-	120
	SB2-SB5	225	-
	SB5-LUMINAIRE 1	-	120
	SB5-LUMINAIRE 2	-	120
	CB1-SB12	155	-
	SB12-LUMINAIRE	-	120
	SB12-LUMINAIRE	-	120
	SB12-SB9	250	-
	SB9-LUMINAIRE 1	-	120
	SB9-LUMINAIRE 2	-	120
SUBTOTAL		760	960
COFFEE AT NATIONAL	CB1-SB2	125	
	SB2-LUMINAIRE 1	-	120
	SB2-SB4	275	
	SB4-LUMINAIRE 1	-	120
	CB1-SB8	170	
	SB8-LUMINAIRE 1	-	120
	SB8-SB6	130	
	SB6-LUMINAIRE 1	-	120
	SB6-SB5	190	
	SB5-LUMINAIRE 1	-	120
SUBTOTAL		890	600
TOTAL		2,290	2,040

EQUIPMENT GROUNDING CONDUCTORS

LOCATION	LOCATION	655.0515 * ELECTRICAL WIRE TRAFFIC SIGNALS 10 AWG (GREEN) L.F.
COFFEE AT CALHOUN	CB1-SB1	75
	SB1-SB2	150
	SB2-SB3	90
	SB3-SB4	135
	SB4-SB5	110
	SB5-SB6	150
	SB6-SB7	60
	SB7-SB8	110
	SB8-CB1	65
SUBTOTAL		945
COFFEE AT MOORLAND	CB1-SB1	50
	SB1-SB2	95
	SB2-SB3	70
	SB3-SB4	100
	SB4-SB5	115
	SB5-SB6	100
	SB6-SB7	45
	SB7-SB8	110
	SB8-SB9	110
	SB9-SB10	95
	SB10-SB11	115
	SB11-SB12	120
	SB12-SB13	95
	SB13-SB14	45
	SB14-CB1	75
SUBTOTAL		1,340
COFFEE AT NATIONAL	CB1-SB1	95
	SB1-SB2	50
	SB2-SB3	40
	SB3-SB4	240
	SB4-SB5	125
	SB5-SB6	160
	SB6-SB7	65
	SB7-SB8	120
	SB8-CB1	135
SUBTOTAL		1,030
TOTAL		3,315

* ADDITIONAL QUANTITIES SHOWN ELSEWHERE

3

SHEET 6 OF 7

SIGNAL BASES, POLES, ARMS, AND LUMINAIRES

LOCATION	SB NO.	657.0100 PEDESTAL BASES EACH	657.0255 TRANSFORMER BASES BREAKAWAY 11 1/2-INCH BOLT CIRCLE EACH	657.0310 POLES, TYPE 3 EACH	657.0315 POLES TYPE 4 EACH	SPV.0060.02 POLES TYPE 9 EACH	SPV.0060.03 POLES TYPE 12 EACH	657.0430 TRAFFIC SIGNAL STANDARDS ALUMINUM 10-FT EACH	657.0425 TRAFFIC SIGNAL STANDARDS ALUMINUM 15-FT EACH	657.0590 TROMBONE ARMS, 20-FOOT EACH	657.0595 TROMBONE ARMS, 25-FOOT EACH	SPV.0060.06 MONOTUBE ARMS 25-FT EACH	SPV.0060.07 MONOTUBE ARMS 30-FT EACH	SPV.0060.08 MONOTUBE ARMS 35-FT EACH	658.0500 PEDESTRIAN PUSH BUTTONS EACH	659.0125 LUMINAIRES UTILITY HPS 250 WATTS EACH	657.0614 LUMINAIRE ARMS SINGLE MEMBER 4-INCH CLAMP 8-FOOT EACH
COFFEE AT CALHOUN	SB1	1	-	-	-	-	-	-	1	-	-	-	-	-	-	-	-
	SB2	-	1	1	-	-	-	-	-	1	-	-	-	-	-	1	1
	SB3	1	-	-	-	-	-	-	1	-	-	-	-	-	-	-	-
	SB4	-	1	1	-	-	-	-	-	1	-	-	-	-	-	1	1
	SB5	1	-	-	-	-	-	-	1	-	-	-	-	-	-	-	-
SUBTOTAL		3	2	2	0	0	0	0	3	2	0	0	0	0	0	2	2
COFFEE AT MOORLAND	SB1	1	-	-	-	-	-	-	1	-	-	-	-	-	1	-	-
	SB2	-	1	-	1	-	-	-	-	-	-	-	-	-	-	2	2
	SB3	-	-	-	-	1	-	-	-	-	-	1	-	-	1	-	-
	SB4	1	-	-	-	-	-	-	1	-	-	-	-	-	1	-	-
	SB5	-	1	-	1	-	-	-	-	-	-	-	-	-	-	2	2
	SB6	-	-	-	-	-	1	-	-	-	-	-	-	1	-	-	-
	SB7	1	-	-	-	-	-	1	-	-	-	-	-	-	1	-	-
	SB8	1	-	-	-	-	-	-	1	-	-	-	-	-	1	-	-
	SB9	-	1	-	1	-	-	-	-	-	-	-	-	-	-	2	2
	SB10	-	-	-	-	1	-	-	-	-	-	-	1	-	1	-	-
	SB11	1	-	-	-	-	-	-	1	-	-	-	-	-	1	-	-
	SB12	-	1	-	1	-	-	-	-	-	-	-	-	-	-	2	2
	SB13	-	-	-	-	-	1	-	-	-	-	-	-	1	-	-	-
	SB14	1	-	-	-	-	-	1	-	-	-	-	-	-	1	-	-
SUBTOTAL		6	4	0	4	2	2	2	4	0	0	1	1	2	8	8	8
COFFEE AT NATIONAL	SB1	1	-	-	-	-	-	1	-	-	-	-	-	-	1	-	-
	SB2	-	1	1	-	-	-	-	-	-	1	-	-	-	1	1	1
	SB3	1	-	-	-	-	-	-	1	-	-	-	-	-	-	-	-
	SB6	-	1	1	-	-	-	-	-	-	1	-	-	-	-	1	1
	SB7	1	-	-	-	-	-	1	-	-	-	-	-	-	1	-	-
	SB8	-	1	-	1	-	-	-	-	-	-	-	-	-	1	1	1
SUBTOTAL		3	3	2	1	0	0	2	1	0	2	0	0	0	4	3	3
TOTAL		12	9	4	5	2	2	4	8	2	2	1	1	2	12	13	13

MISCELLANEOUS ITEMS

LOCATION	ITEM NUMBER	UNIT	QUANTITY	DESCRIPTION
COFFEE AT CALHOUN	658.5069.01	LS	1	SIGNAL MOUNTING HARDWARE
	SPV.0105.03	LS	1	EMERGENCY VEHICLE PREEMPTION SYSTEM
COFFEE AT MOORLAND	656.0200.01	LS	1	ELECTRICAL SERVICE METER BREAKER PEDESTAL
	658.5069.02	LS	1	SIGNAL MOUNTING HARDWARE
	661.0300	DAY	1	GENERATORS
	661.0200.01	LS	1	TEMPORARY TRAFFIC SIGNALS FOR INTERSECTIONS
	SPV.0060.01	EA	1	TRAFFIC SIGNAL CONTROLLER AND CABINET 8-PHASE FULLY ACTUATED
	SPV.0105.01	LS	1	VIDEO VEHICLE DETECTION SYSTEM
	SPV.0105.04	LS	1	EMERGENCY VEHICLE PREEMPTION SYSTEM
	SPV.0105.06	LS	1	REMOVE TRAFFIC SIGNALS AND STREET LIGHTING
COFFEE AT NATIONAL	656.0200.02	LS	1	ELECTRICAL SERVICE METER BREAKER PEDESTAL
	658.5069.03	LS	1	SIGNAL MOUNTING HARDWARE
	661.0300	DAY	1	GENERATORS
	661.0200.02	LS	1	TEMPORARY TRAFFIC SIGNALS FOR INTERSECTIONS
	SPV.0060.01	EA	1	TRAFFIC SIGNAL CONTROLLER AND CABINET 8-PHASE FULLY ACTUATED
	SPV.0105.02	LS	1	VIDEO VEHICLE DETECTION SYSTEM
	SPV.0105.05	LS	1	EMERGENCY VEHICLE PREEMPTION SYSTEM
	SPV.0105.07	LS	1	REMOVE TRAFFIC SIGNALS AND STREET LIGHTING

TRANSPORTATION PROJECT PLAT NO: 2722-10-00 - 4.01
AMENDMENT NO: 1

AMENDS PARCELS 2, 6 AND 11 OF TPP 2722-10-00-4.01, RECORDED AS DOCUMENT 3932422

COFFEE ROAD, CITY OF NEW BERLIN (CALHOUN ROAD - W. NATIONAL AVE.)

THAT PART OF C.S.M. 719 AND PART OF THE SW1/4-NW1/4, SE1/4-NW1/4, NE1/4-SW1/4 AND NW1/4-SW1/4 OF SECTION 15, T 6 N, R 20 E, CITY OF NEW BERLIN, WAUKESHA COUNTY, WISCONSIN.

RELOCATION ORDER COFFEE ROAD, WAUKESHA COUNTY.

TO PROPERLY ESTABLISH, LAY OUT, WIDEN, ENLARGE, EXTEND, CONSTRUCT, RECONSTRUCT, IMPROVE, OR MAINTAIN A PORTION OF THE HIGHWAY DESIGNATED ABOVE, THE CITY OF NEW BERLIN DEEMS IT NECESSARY TO RELOCATE OR CHANGE SAID HIGHWAY AND ACQUIRE CERTAIN LANDS AND INTERESTS OR RIGHTS IN LANDS FOR THE ABOVE PROJECT.

TO EFFECT THIS CHANGE, PURSUANT TO AUTHORITY GRANTED UNDER SECTION 62.22, WISCONSIN STATUTES, THE CITY OF NEW BERLIN HEREBY ORDERS THAT:

1. THAT PORTION OF SAID HIGHWAY AS SHOWN ON THIS PLAT IS LAID OUT AND ESTABLISHED TO THE LINES AND WIDTHS AS SO SHOWN FOR THE ABOVE PROJECT.
2. THE LANDS OR INTERESTS OR RIGHTS IN LANDS AS SHOWN ON THIS PLAT ARE REQUIRED BY THE CITY FOR THE ABOVE PROJECT AND SHALL BE ACQUIRED IN THE NAME OF THE CITY OF NEW BERLIN, PURSUANT TO THE PROVISIONS OF SECTION 62.22, WISCONSIN STATUTES.

A TEMPORARY LIMITED EASEMENT (TLE) IS A RIGHT FOR CONSTRUCTION PURPOSES, AS DEFINED HEREIN, INCLUDING THE RIGHT TO OPERATE NECESSARY EQUIPMENT THEREON AND THE RIGHT OF INGRESS AND EGRESS, AS LONG AS REQUIRED FOR SUCH PUBLIC PURPOSE, INCLUDING THE RIGHT TO PRESERVE, PROTECT, REMOVE, OR PLANT THEREON ANY VEGETATION THAT THE HIGHWAY AUTHORITIES MAY DEEM NECESSARY OR DESIRABLE. ALL TLEs EXPIRE AT THE COMPLETION OF THE CONSTRUCTION PROJECT FOR WHICH THIS INSTRUMENT IS GIVEN.

A PERMANENT LIMITED EASEMENT (PLE) IS A RIGHT FOR CONSTRUCTION AND MAINTENANCE PURPOSES, AS DEFINED HEREIN, INCLUDING THE RIGHT TO OPERATE NECESSARY EQUIPMENT THEREON AND THE RIGHT OF INGRESS AND EGRESS, AS LONG AS REQUIRED FOR SUCH PUBLIC PURPOSE, INCLUDING THE RIGHT TO PRESERVE, PROTECT, REMOVE, OR PLANT THEREON ANY VEGETATION THAT THE HIGHWAY AUTHORITIES MAY DEEM NECESSARY OR DESIRABLE, BUT WITHOUT PREJUDICE TO THE OWNER'S RIGHT TO MAKE OR CONSTRUCT IMPROVEMENT ON SAID LANDS OR TO FLATTEN THE SLOPES, PROVIDING SAID ACTIVITIES WILL NOT IMPAIR OR OTHERWISE ADVERSELY AFFECT THE HIGHWAY FACILITIES.

SCHEDULE OF LANDS & INTERESTS REQUIRED

OWNER'S NAMES ARE SHOWN FOR REFERENCE PURPOSES ONLY AND ARE SUBJECT TO CHANGE PRIOR TO THE TRANSFER OF LAND INTERESTS TO THE CITY.

PARCEL NUMBER	OWNER(S)	INTEREST REQUIRED	R/W ACRES OR S.F. REQUIRED NEW	EXISTING	TOTAL	PLE ACRES OR S.F.	TLE ACRES OR S.F.
2	ISB COMMUNITY BANK	FEE, TLE, PLE	0.822	1.435	2.257	0.095	0.386
3	ERNEST G SCHUTTE & JOANN	FEE, TLE	0.061	0.118	0.178		0.013
4	RANDALL W APPS & JAYNE A	FEE, TLE	0.039	0.076	0.115		0.046
6	PATRICIA KUBISIAK	FEE, TLE	0.039	0.076	0.115		0.046
7	CONSTANCE M SERY	FEE, TLE	0.039	0.076	0.115		0.046
8	JAMES D SERY & MARLENE D	FEE, TLE	0.039	0.076	0.115		0.046
9	ARELENE E REED	FEE	0.039	0.076	0.115		
11	GP LEGACY LLC, C/O JOSHUA L. GIMBEL, ESQ.	FEE, TLE	0.889	1.561	2.450		0.301
13	GENE E PARK & ELLEN L	FEE	0.035	0.068	0.103		
80	WE ENERGIES (ELECTRIC)	RELEASE OF RIGHTS					
81	AT&T	RELEASE OF RIGHTS					

ALL FEE TITLE AREAS REQUIRED FOR NEW R/W INDICATED BY HATCHING

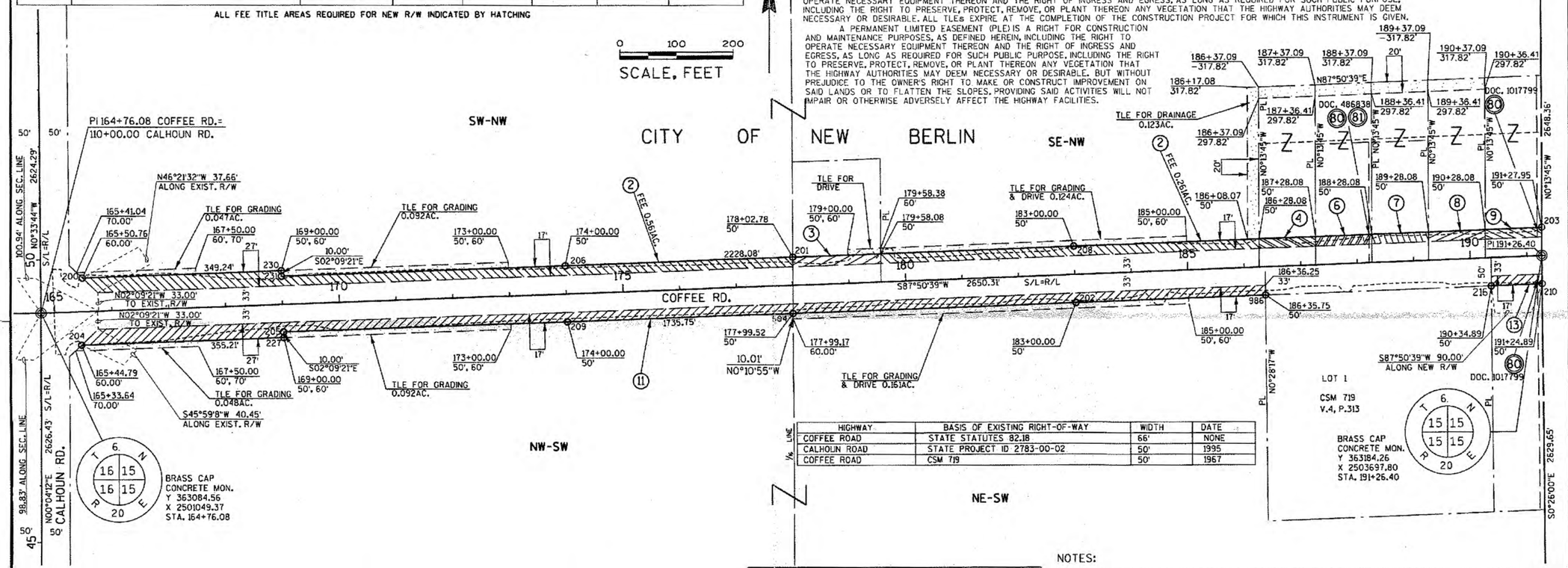

HIGHWAY	BASIS OF EXISTING RIGHT-OF-WAY	WIDTH	DATE
COFFEE ROAD	STATE STATUTES 82.18	66'	NONE
CALHOUN ROAD	STATE PROJECT ID 2783-00-02	50'	1995
COFFEE ROAD	CSM 719	50'	1967

NOTES:

COORDINATES AND BEARINGS ON THE PLAT ARE ORIENTED TO THE WISCONSIN STATE PLANE SOUTH ZONE NAD 1927. ALL PLAT DISTANCES ARE GROUND LENGTH AND MAY BE CONVERTED TO GRID LENGTH BY MULTIPLYING THE DISTANCE BY THE GRID FACTOR OF 0.99991852 UNLESS OTHERWISE NOTED.

RIGHT-OF-WAY BOUNDARIES ARE DEFINED WITH COURSES OF THE PERIMETER OF THE HIGHWAY LANDS REFERENCED TO THE U.S. PUBLIC LAND SURVEY SYSTEM OR OTHER "SURVEYS OF PUBLIC RECORD". PROPERTY LINES SHOWN ON THIS PLAT ARE DRAWN FROM DATA DERIVED FROM MAPS AND DOCUMENTS OF PUBLIC RECORD AND/OR EXISTING OCCUPATIONAL LINES. THIS PLAT MAY NOT BE A TRUE REPRESENTATION OF EXISTING PROPERTY LINES, EXCLUDING RIGHT-OF-WAY LINES, AND SHOULD NOT BE USED AS A SUBSTITUTE FOR AN ACCURATE FIELD SURVEY.

RIGHT-OF-WAY MONUMENTS ARE TYPE 2 (3/4" X 24" REBAR WITH PLASTIC CAP) AND ARE PLACED PRIOR TO THE COMPLETION OF THE PROJECT.

CONVENTIONAL SYMBOLS AND ABBREVIATIONS

STATE, COUNTY, or TOWN LINE		ACCESS POINT/ DRIVEWAY CONNECTION	AP			STATION	STA.
SECTION LINE		ACCESS RIGHTS	AR			TEMPORARY LIMITED EASEMENT	TLE
QUARTER LINE		ACRES	AC.			VOLUME	V.
SIXTEENTH LINE		AND OTHERS	ET.AL.			**CURVE DATA**	
PROPOSED REFERENCE LINE		CENTERLINE	C/L	FEE (HATCH VARIES)		LONG CHORD	LCH
PROPOSED R/W LINE		CERTIFIED SURVEY MAP	CSM	TEMPORARY LIMITED EASEMENT		LONG CHORD BEARING	LCB
EXISTING H.E. LINE		DOCUMENT	DOC.	PERMANENT LIMITED EASEMENT		RADIUS	R
PROPERTY LINE		HIGHWAY EASEMENT	H.E.	PARCEL NUMBER	102	DEGREE OF CURVE	D
EASEMENT LINE		LAND CONTRACT	LC	UTILITY PARCEL NUMBER	92	CENTRAL ANGLE OR DELTA	DELTA
CORPORATE LIMITS		MONUMENT	MON.	SIGN NUMBER (OFF PREMISE)	21	LENGTH OF CURVE	L
EXISTING CENTERLINE		PAGE	P.	BUILDING		TANGENT	TAN
LOT & TIE LINES		PERMANENT LIMITED EASEMENT	PLE	FOUND IRON PIPE/PIN	LF (1" UNLESS NOTED)		NON COMPENSABLE / COMPENSABLE
UTILITIES (TELEPHONE,GAS,ELECTRIC,CABLE TV,FIBER OPTIC)	FO (TYPE)	PROPERTY LINE	PL	R/W MONUMENT	•(SET)	POWER POLE	
NO ACCESS (BY PREVIOUS ACQUISITION/CONTROL)		RECORDED AS	(100')	R/W STANDARD	▲(SET)	TELEPHONE POLE	
NO ACCESS (BY ACQUISTION)		REFERENCE LINE	R/L	SIGN	SIGN	TELEPHONE PEDESTAL	
NO ACCESS (BY STATUTORY AUTHORITY)		REMAINING	REM.	SECTION CORNER SYMBOL			
		RIGHT-OF-WAY	R/W				
		SECTION	SEC.				
		SQUARE FEET	SQ.FT.				

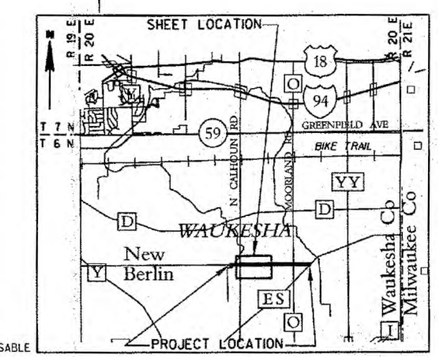

KAPUR & ASSOCIATES, INC.
CONSULTING ENGINEERS
MILWAUKEE, WISCONSIN
414.351.6660

I, MICHAEL V. BECKER, REGISTERED LAND SURVEYOR, HEREBY CERTIFY THAT IN FULL COMPLIANCE WITH THE PROVISIONS OF SECTION 84.095 OF THE WISCONSIN STATUTES AND UNDER THE DIRECTION OF THE CITY OF NEW BERLIN, I HAVE SURVEYED AND MAPPED TRANSPORTATION PROJECT PLAT 2722-10-00 - 4.01 AND THAT SUCH PLAT CORRECTLY REPRESENTS ALL EXTERIOR BOUNDARIES OF THE SURVEYED LAND.

WISCONSIN MICHAEL V. BECKER S-2574 PORT WASHINGTON, WISCONSIN LAND SURVEYOR

(SIGNATURE) Michael V. Becker DATE MAR. 6 2013

(PRINTED NAME) MICHAEL V. BECKER

(REGISTRATION NUMBER) S-2574

THIS PLAT AND RELOCATION ORDER ARE APPROVED FOR THE CITY OF NEW BERLIN

(SIGNATURE) DATE 3/28/13

(PRINTED NAME) Mayor Jack Chiaverotto

RESERVED FOR REGISTER OF DEEDS
PROJECT NUMBER 2722-10-00-4.01
AMENDMENT NO:

4002515
REGISTER OF DEEDS
WAUKESHA COUNTY, WI
RECORDED ON
April 02, 2013 10:14 AM
James R Behrend
Register of Deeds
1 PG
TOTAL FEE: $25.00
TRANS FEE: $0.00
Book 1 Page 153-155

'G IN EDS

FILE NAME : $$....designfile....$$
APPRAISAL PLAT DATE :
PLOT DATE : $$...plottingdate...$$ PLOT BY : $$...plotuser...$$ PLOT NAME :
PLOT SCALE : $$.....plotscale.....$$

4.01

TRANSPORTATION PROJECT PLAT NO: 2722-10-00 - 4.02
AMENDMENT NO: 1

AMENDS PARCELS 29 AND 36 OF TPP 2722-10-00-4.02, RECORDED AS DOCUMENT 3932423

COFFEE ROAD, CITY OF NEW BERLIN (CALHOUN ROAD - W. NATIONAL AVE.)

THAT PART OF LOTS 1 THRU 3, BLOCK B, LOTS 1 AND 5, BLOCK A OF MONTEREY SUBDIVISION, LOTS 1 THRU 4 AND LOT 10, BLOCK A, BEL-AIRE, LOTS 5 AND 6, BLOCK 7, TOP-O-HILL ADDITION, PARCEL B, C.S.M. 3718 AND IN THE SW1/4-NE1/4, SE1/4-NE1/4, NW1/4-SE1/4 ALL OF SECTION 15, T 6 N, R 20 E, CITY OF NEW BERLIN, WAUKESHA COUNTY, WISCONSIN.

RELOCATION ORDER COFFEE ROAD, WAUKESHA COUNTY.

TO PROPERLY ESTABLISH, LAY OUT, WIDEN, ENLARGE, EXTEND, CONSTRUCT, RECONSTRUCT, IMPROVE, OR MAINTAIN A PORTION OF THE HIGHWAY DESIGNATED ABOVE, THE CITY OF NEW BERLIN DEEMS IT NECESSARY TO RELOCATE OR CHANGE SAID HIGHWAY AND ACQUIRE CERTAIN LANDS AND INTERESTS OR RIGHTS IN LANDS FOR THE ABOVE PROJECT.

TO EFFECT THIS CHANGE, PURSUANT TO AUTHORITY GRANTED UNDER SECTION 62.22, WISCONSIN STATUTES, THE CITY OF NEW BERLIN HEREBY ORDERS THAT:

1. THAT PORTION OF SAID HIGHWAY AS SHOWN ON THIS PLAT IS LAID OUT AND ESTABLISHED TO THE LINES AND WIDTHS AS SO SHOWN FOR THE ABOVE PROJECT.
2. THE LANDS OR INTERESTS OR RIGHTS IN LANDS AS SHOWN ON THIS PLAT ARE REQUIRED BY THE CITY FOR THE ABOVE PROJECT AND SHALL BE ACQUIRED IN THE NAME OF THE CITY OF NEW BERLIN, PURSUANT TO THE PROVISIONS OF SECTION 62.22, WISCONSIN STATUTES.

A TEMPORARY LIMITED EASEMENT (TLE) IS A RIGHT FOR CONSTRUCTION PURPOSES, AS DEFINED HEREIN, INCLUDING THE RIGHT TO OPERATE NECESSARY EQUIPMENT THEREON AND THE RIGHT OF INGRESS AND EGRESS, AS LONG AS REQUIRED FOR SUCH PUBLIC PURPOSE, INCLUDING THE RIGHT TO PRESERVE, PROTECT, REMOVE, OR PLANT THEREON ANY VEGETATION THAT THE HIGHWAY AUTHORITIES MAY DEEM NECESSARY OR DESIRABLE. ALL TLEs EXPIRE AT THE COMPLETION OF THE CONSTRUCTION PROJECT FOR WHICH THIS INSTRUMENT IS GIVEN.

A PERMANENT LIMITED EASEMENT (PLE) IS A RIGHT FOR CONSTRUCTION AND MAINTENANCE PURPOSES, AS DEFINED HEREIN, INCLUDING THE RIGHT TO OPERATE NECESSARY EQUIPMENT THEREON AND THE RIGHT OF INGRESS AND EGRESS, AS LONG AS REQUIRED FOR SUCH PUBLIC PURPOSE, INCLUDING THE RIGHT TO PRESERVE, PROTECT, REMOVE, OR PLANT THEREON ANY VEGETATION THAT THE HIGHWAY AUTHORITIES MAY DEEM NECESSARY OR DESIRABLE, BUT WITHOUT PREJUDICE TO THE OWNER'S RIGHT TO MAKE OR CONSTRUCT IMPROVEMENT ON SAID LANDS OR TO FLATTEN THE SLOPES, PROVIDING SAID ACTIVITIES WILL NOT IMPAIR OR OTHERWISE ADVERSELY AFFECT THE HIGHWAY FACILITIES.

CONVENTIONAL SYMBOLS AND ABBREVIATIONS

STATE, COUNTY, or TOWN LINE
SECTION LINE
QUARTER LINE
SIXTEENTH LINE
PROPOSED REFERENCE LINE
PROPOSED R/W LINE
EXISTING H.E. LINE
PROPERTY LINE
EASEMENT LINE
CORPORATE LIMITS
EXISTING CENTERLINE
LOT & TIE LINES
UTILITIES (TELEPHONE, GAS, ELECTRIC, CABLE TV, FIBER OPTIC) — F6 (TYPE)
NO ACCESS (BY PREVIOUS ACQUISITION/CONTROL)
NO ACCESS (BY ACQUISITION)
NO ACCESS (BY STATUTORY AUTHORITY)
ACCESS POINT/ DRIVEWAY CONNECTION — AP
ACCESS RIGHTS — AR
ACRES — AC.
AND OTHERS — ET.AL.
CENTERLINE — C/L

CERTIFIED SURVEY MAP — CSM
DOCUMENT — DOC.
HIGHWAY EASEMENT — H.E.
LAND CONTRACT — LC
MONUMENT — MON.
PAGE — P.
PROPERTY LINE — PL
RECORDED AS — (100')
REFERENCE LINE — R/L
REMAINING — REM.
RIGHT-OF-WAY — R/W
SECTION — SEC.
SQUARE FEET — SQ.FT.

FEE (HATCH VARIES)
TEMPORARY LIMITED EASEMENT
PERMANENT LIMITED EASEMENT
PARCEL NUMBER — 102
UTILITY PARCEL NUMBER — 92
SIGN NUMBER (OFF PREMISE) — 21
BUILDING
FOUND IRON PIPE/PIN — LS (1" UNLESS NOTED)
R/W MONUMENT — ●(SET)
R/W STANDARD — ▲(SET)
SIGN — SIGN
SECTION CORNER SYMBOL

STATION — STA.
TEMPORARY LIMITED EASEMENT — TLE
VOLUME — V.

CURVE DATA

LONG CHORD — LCH
LONG CHORD BEARING — LCB
RADIUS — R
DEGREE OF CURVE — D
CENTRAL ANGLE OR DELTA — DELTA
LENGTH OF CURVE — L
TANGENT — TAN

	NON COMPENSABLE	COMPENSABLE
POWER POLE		
TELEPHONE POLE		
TELEPHONE PEDESTAL		

N

0 100 200
SCALE, FEET

HIGHWAY	BASIS OF EXISTING RIGHT-OF-WAY	WIDTH	DATE
COFFEE ROAD	STATE STATUTES 82.18	66'	NONE
COFFEE ROAD	TOP-O-HILL	50'	1956
COFFEE ROAD	TOP-O-HILL ADDITION	50'	1956
COFFEE ROAD	CSM 746479	50'	1969
COFFEE ROAD	MONTEREY SUBDIVISION	50'	1955
COFFEE ROAD	BEL-AIRE	50'	1955
MOORELAND ROAD	STATE PROJECT ID 2722-3-71	55'	1978

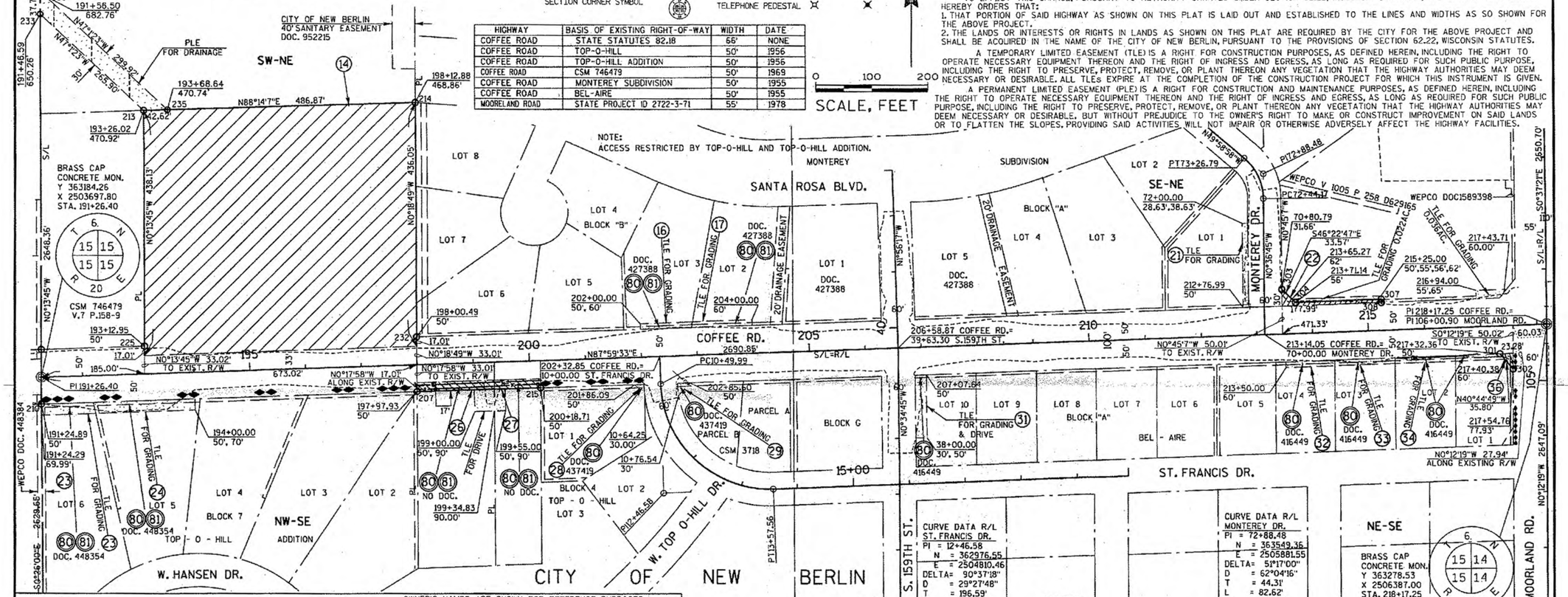

SCHEDULE OF LANDS & INTERESTS REQUIRED

OWNER'S NAMES ARE SHOWN FOR REFERENCE PURPOSES ONLY AND ARE SUBJECT TO CHANGE PRIOR TO THE TRANSFER OF LAND INTERESTS TO THE CITY.

PARCEL NUMBER	OWNER(S)	INTEREST REQUIRED	R/W ACRES OR S.F. REQUIRED NEW	EXISTING	TOTAL	PLE ACRES OR S.F.	TLE ACRES OR S.F.
14	DELUXE DATA SYSTEMS	FEE, PLE	4.887	0.369	5.256	0.194	
16	LEO A FRANECKI	TLE					0.021
17	SUSAN C DEXTER LIVING TRUST &	TLE					0.025
21	ALLEN O BAUM & ROSE M	TLE					0.035
22	CHRIST THE VICTOR	FEE, TLE	0.031		0.031		0.057
23	DONALD J CASPER & MERLE A	TLE					0.044
24	KEITH W HERRICK & KAREN L	TLE					0.083
26	DORI A JACOBSON	FEE, TLE	0.054	0.105	0.159		0.033
27	NEIL W TAVERNIA & TANYA J	FEE, TLE	0.032	0.063	0.095		0.018
28	JAMES G KAEHNY & DEBRA J	TLE					0.003
29	CARLETON & BEVERLY KRAEMER	TLE					0.006
31	AUGUST P MARTIN & SANDRA J	TLE					0.052
32	STEPHEN W ASPENLEITER & HILARY	TLE					0.020
33	RANDALL L JACQUES	TLE					0.025
34	BENJAMIN J NOLTE & STEFANIE L	TLE					0.025
36	DARRELL A RADKE & MAUREEN E	FEE, TLE	0.007		0.007		0.019
80	WE ENERGIES (ELECTRIC)	RELEASE OF RIGHTS					
81	AT&T	RELEASE OF RIGHTS					

ALL FEE TITLE AREAS REQUIRED FOR NEW R/W INDICATED BY HATCHING

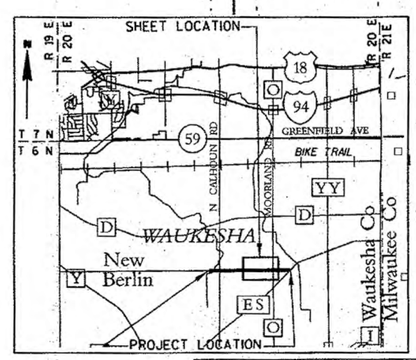

KAPUR & ASSOCIATES, INC.
CONSULTING ENGINEERS
MILWAUKEE, WISCONSIN
414.351.6668

NOTES:

COORDINATES AND BEARINGS ON THE PLAT ARE ORIENTED TO THE WISCONSIN STATE PLANE SOUTH ZONE NAD 1927. ALL PLAT DISTANCES ARE GROUND LENGTH AND MAY BE CONVERTED TO GRID LENGTH BY MULTIPLYING THE DISTANCE BY THE GRID FACTOR OF 0.99991852 UNLESS OTHERWISE NOTED.

RIGHT-OF-WAY BOUNDARIES ARE DEFINED WITH COURSES OF THE PERIMETER OF THE HIGHWAY LANDS REFERENCED TO THE U.S. PUBLIC LAND SURVEY SYSTEM OR OTHER "SURVEYS OF PUBLIC RECORD". PROPERTY LINES SHOWN ON THIS PLAT ARE DRAWN FROM DATA DERIVED FROM MAPS AND DOCUMENTS OF PUBLIC RECORD AND/OR EXISTING OCCUPATIONAL LINES. THIS PLAT MAY NOT BE A TRUE REPRESENTATION OF EXISTING PROPERTY LINES, EXCLUDING RIGHT-OF-WAY LINES, AND SHOULD NOT BE USED AS A SUBSTITUTE FOR AN ACCURATE FIELD SURVEY.

RIGHT-OF-WAY MONUMENTS ARE TYPE 2 (3/4" X 24" REBAR WITH PLASTIC CAP) AND ARE PLACED PRIOR TO THE COMPLETION OF THE PROJECT.

ACCESS RESTRICTED BY TOP-O-HILL SUBDIVISION & TOP-O-HILL ADDITION

I, MICHAEL V. BECKER, REGISTERED LAND SURVEYOR, HEREBY CERTIFY THAT IN FULL COMPLIANCE WITH THE PROVISIONS OF SECTION 84.095 OF THE WISCONSIN STATUTES AND UNDER THE DIRECTION OF THE CITY OF NEW BERLIN, I HAVE SURVEYED AND MAPPED TRANSPORTATION PROJECT PLAT 2722-10-00 - 4.02 AND THAT SUCH PLAT CORRECTLY REPRESENTS ALL EXTERIOR BOUNDARIES OF THE SURVEYED LAND.

WISCONSIN MICHAEL V. BECKER S-2574 PORT WASHINGTON, WISCONSIN LAND SURVEYOR

(SIGNATURE) Michael V. Becker DATE MAR. 6, 2013
(PRINTED NAME) MICHAEL V. BECKER
(REGISTRATION NUMBER) S-2574

THIS PLAT AND RELOCATION ORDER ARE APPROVED FOR THE CITY OF NEW BERLIN
(SIGNATURE) DATE 3/28/13
(PRINTED NAME) Mayor Jack Chiavatero

RESERVED FOR REGISTER OF DEEDS
PROJECT NUMBER 2722-10-00-4.02
AMENDMENT NO:

4082516
REGISTER OF DEEDS WAUKESHA COUNTY, WI RECORDED ON
April 02, 2013 10:14 AM
James R Behrend
Register of Deeds
1 PG
TOTAL FEE: $25.00
TRANS FEE: $0.00
Book 1 Page 156-156

FILE NAME : $$....designfile....$$
APPRAISAL PLAT DATE :
PLOT DATE : $$...plottingdate...$$ PLOT BY : $$...plotuser...$$ PLOT NAME :
PLOT SCALE : $$.....plotscale.....$$
4.02

TRANSPORTATION PROJECT PLAT NO: 2722-10-00 - 4.03
AMENDMENT NO: 1

AMENDS PARCELS 37, 41 AND 42 OF TPP 2722-10-00-4.03, RECORDED AS DOCUMENT 3932424

COFFEE ROAD, CITY OF NEW BERLIN (CALHOUN ROAD - W. NATIONAL AVE.)

THAT PART OF LOTS 1, AND 9, BLOCK 7, LOT 2, BLOCK 6 OF MONTEREY PARK SUBDIVISION, PARCEL 1, C.S.M. 924, PARCEL 1, C.S.M. 4728 AND THE NW1/4-SW1/4 AND NE1/4-SW1/4 OF SECTION 14, T 6 N, R 20 E, CITY OF NEW BERLIN, WAUKESHA COUNTY, WISCONSIN.

RELOCATION ORDER COFFEE ROAD, WAUKESHA COUNTY.

TO PROPERLY ESTABLISH, LAY OUT, WIDEN, ENLARGE, EXTEND, CONSTRUCT, RECONSTRUCT, IMPROVE, OR MAINTAIN A PORTION OF THE HIGHWAY DESIGNATED ABOVE, THE CITY OF NEW BERLIN DEEMS IT NECESSARY TO RELOCATE OR CHANGE SAID HIGHWAY AND ACQUIRE CERTAIN LANDS AND INTERESTS OR RIGHTS IN LANDS FOR THE ABOVE PROJECT.

TO EFFECT THIS CHANGE, PURSUANT TO/AUTHORITY GRANTED UNDER SECTION 62.22, WISCONSIN STATUTES, THE CITY OF NEW BERLIN HEREBY ORDERS THAT:

1. THAT PORTION OF SAID HIGHWAY AS SHOWN ON THIS PLAT IS LAID OUT AND ESTABLISHED TO THE LINES AND WIDTHS AS SO SHOWN FOR THE ABOVE PROJECT.
2. THE LANDS OR INTERESTS OR RIGHTS IN LANDS AS SHOWN ON THIS PLAT ARE REQUIRED BY THE CITY FOR THE ABOVE PROJECT AND SHALL BE ACQUIRED IN THE NAME OF THE CITY OF NEW BERLIN, PURSUANT TO THE PROVISIONS OF SECTION 62.22, WISCONSIN STATUTES.

A TEMPORARY LIMITED EASEMENT (TLE) IS A RIGHT FOR CONSTRUCTION PURPOSES, AS DEFINED HEREIN, INCLUDING THE RIGHT TO OPERATE NECESSARY EQUIPMENT THEREON AND THE RIGHT OF INGRESS AND EGRESS, AS LONG AS REQUIRED FOR SUCH PUBLIC PURPOSE, INCLUDING THE RIGHT TO PRESERVE, PROTECT, REMOVE, OR PLANT THEREON ANY VEGETATION THAT THE HIGHWAY AUTHORITIES MAY DEEM NECESSARY OR DESIRABLE. ALL TLEs EXPIRE AT THE COMPLETION OF THE CONSTRUCTION PROJECT FOR WHICH THIS INSTRUMENT IS GIVEN.

NOTES: COORDINATES AND BEARINGS ON THE PLAT ARE ORIENTED TO THE WISCONSIN STATE PLANE SOUTH ZONE NAD 1927. ALL PLAT DISTANCES ARE GROUND LENGTH AND MAY BE CONVERTED TO GRID LENGTH BY MULTIPLYING THE DISTANCE BY THE GRID FACTOR OF 0.99991852 UNLESS OTHERWISE NOTED.

RIGHT-OF-WAY BOUNDARIES ARE DEFINED WITH COURSES OF THE PERIMETER OF THE HIGHWAY LANDS REFERENCED TO THE U.S. PUBLIC LAND SURVEY SYSTEM OR OTHER "SURVEYS OF PUBLIC RECORD". PROPERTY LINES SHOWN ON THIS PLAT ARE DRAWN FROM DATA DERIVED FROM MAPS AND DOCUMENTS OF PUBLIC RECORD AND/OR EXISTING OCCUPATIONAL LINES. THIS PLAT MAY NOT BE A TRUE REPRESENTATION OF EXISTING PROPERTY LINES, EXCLUDING RIGHT-OF-WAY LINES, AND SHOULD NOT BE USED AS A SUBSTITUTE FOR AN ACCURATE FIELD SURVEY.

RIGHT-OF-WAY MONUMENTS ARE TYPE 2 (3/4" X 24" REBAR WITH PLASTIC CAP) AND ARE PLACED PRIOR TO THE COMPLETION OF THE PROJECT.

ACCESS RESTRICTED BY MONTEREY PARK SUBDIVISION.

SCHEDULE OF LANDS & INTERESTS REQUIRED

OWNER'S NAMES ARE SHOWN FOR REFERENCE PURPOSED ONLY AND ARE SUBJECT TO CHANGE PRIOR TO THE TRANSFER OF LAND INTERESTS TO THE CITY.

PARCEL NUMBER	OWNER(S)	INTEREST REQUIRED	R/W ACRES OR S.F. REQUIRED NEW	EXISTING	TOTAL	PLE ACRES OR S.F.	TLE ACRES OR S.F.
37	LAWRENCE J BASGALL & ELSIE A	FEE, TLE	0.011		0.011		0.058
38	JUDD M SADOWSKI & DENYS L	TLE					0.011
41	NEW BERLIN ENTERPRISES LLC	FEE, TLE	0.020		0.020		0.052
42	NEW BERLIN ENTERPRISES LLC	TLE					0.063
43	CLAY SCHAUER & KAY	FEE, TLE	0.029	0.079	0.108		0.033
44	MICHAEL D MORGAN & JOAN F	FEE, TLE	0.039	0.106	0.145		0.052
46	MILW SMSA LTD PTNRSP	FEE, TLE	0.008	0.022	0.030		0.009
47	BLAIR HOLDINGS LLC	FEE, TLE	0.036	0.099	0.135		0.042
48	BLAIR HOLDINGS LLC	FEE, TLE	0.035	0.097	0.132		0.041
49	DARWIN T LARSEN REVOCABLE TRUS	FEE, TLE	0.0003		0.0003		0.075
51	ERNEST W RICKARD & SHARON J RE	FEE, TLE	0.032		0.032		0.082
80	WE ENERGIES (ELECTRIC)	RELEASE OF RIGHTS					
81	AT&T	RELEASE OF RIGHTS					
82	WE ENERGIES (GAS)	RELEASE OF RIGHTS					
83	CITY OF NEW BERLIN	RELEASE OF RIGHTS					

ALL FEE TITLE AREAS REQUIRED FOR NEW R/W INDICATED BY HATCHING

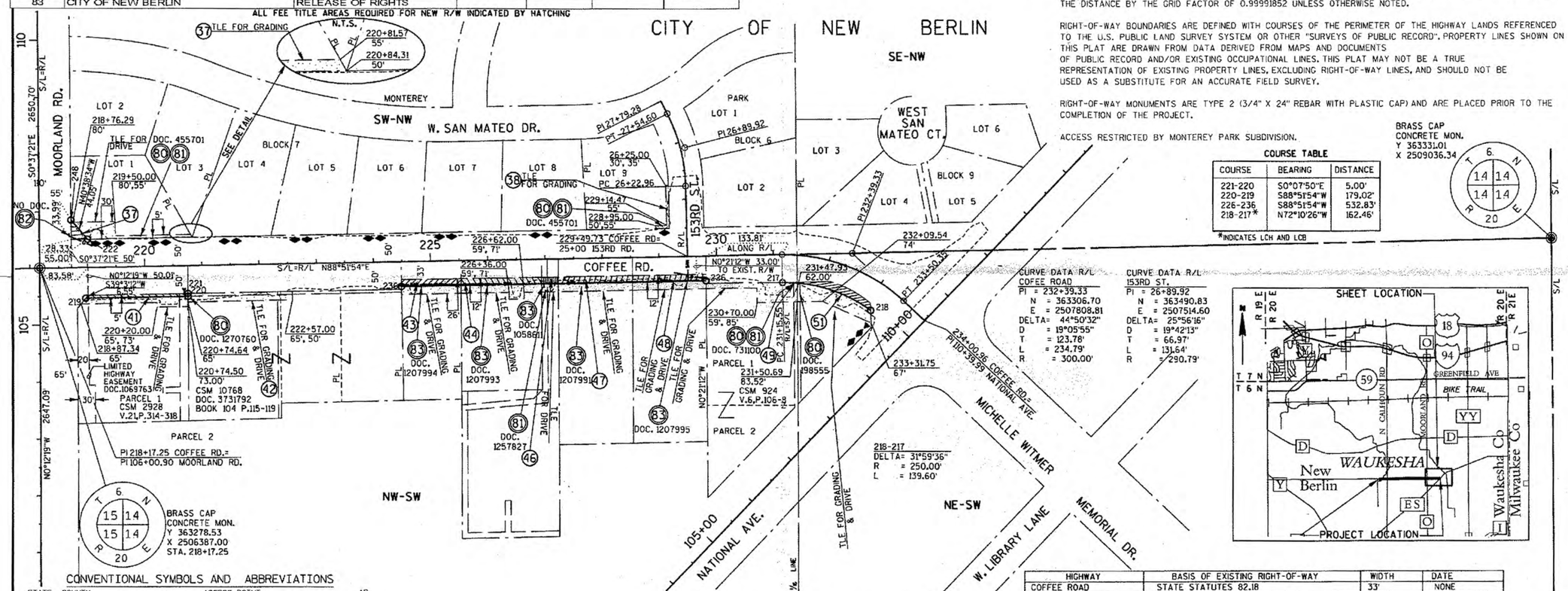

N

0 100 200

SCALE, FEET

COURSE TABLE

COURSE	BEARING	DISTANCE
221-220	S0°07'50"E	5.00'
220-219	S88°51'54"W	179.02'
226-236	S88°51'54"W	532.83'
218-217*	N72°10'26"W	162.46'

*INDICATES LCH AND LCB

CURVE DATA R/L COFEE ROAD

PI = 232+39.33
N = 363306.70
E = 2507808.81
DELTA= 44°50'32"
D = 19°05'55"
T = 123.78'
L = 234.79'
R = 300.00'

CURVE DATA R/L 153RD ST.

PI = 26+89.92
N = 363490.83
E = 2507514.60
DELTA= 25°56'16"
D = 19°42'13"
T = 66.97'
L = 131.64'
R = 290.79'

HIGHWAY	BASIS OF EXISTING RIGHT-OF-WAY	WIDTH	DATE
COFFEE ROAD	STATE STATUTES 82.18	33'	NONE
COFFEE ROAD	C.S.M. 2928	65'	1977
COFFEE ROAD	C.S.M. 924	50'	1968
COFFEE ROAD	C.S.M. 10768	50'	2010
COFFEE ROAD	MONTEREY PARK	50'	1956
MOORELAND ROAD	STATE PROJECT ID 2722-3-71	55'	1978
COFFEE ROAD	STATE PROJECT ID 89-241(12)	VARIES	1991
NATIONAL AVENUE	STATE PROJECT ID 89-241(12)	120'	1991

POINT TABLE - STATION AND OUT

POINT #	STATION	DIST. (ENGLISH)
219	218+95.79	55.00'R
220	220+74.81	55.00'R
221	220+74.90	50.00'R
236	224+48.31	45.00'R
226	229+81.13	45.00'R
217	231+15.55	50.00'R
218	233+14.11	50.00'R
222	219+01.03	50.00'L
248	218+73.00	83.99'L

CONVENTIONAL SYMBOLS AND ABBREVIATIONS

STATE, COUNTY, or TOWN LINE	ACCESS POINT/ DRIVEWAY CONNECTION	AP
SECTION LINE	ACCESS RIGHTS	AR
QUARTER LINE	ACRES	AC.
SIXTEENTH LINE	AND OTHERS	ET.AL.
PROPOSED REFERENCE LINE	CENTERLINE	C/L
PROPOSED R/W LINE	CERTIFIED SURVEY MAP	CSM
EXISTING H.E. LINE	DOCUMENT	DOC.
PROPERTY LINE	HIGHWAY EASEMENT	H.E.
EASEMENT LINE	LAND CONTRACT	LC
CORPORATE LIMITS	MONUMENT	MON.
EXISTING CENTERLINE	PAGE	P.
LOT & TIE LINES	PERMANENT LIMITED EASEMENT	PLE
UTILITIES (TELEPHONE,GAS,ELECTRIC,CABLE TV,FIBER OPTIC)	PROPERTY LINE	PL
	RECORDED AS	(100')
NO ACCESS (BY PREVIOUS ACQUISITION/CONTROL)	RESTRICTED DEVELOPMENT EASEMENT	RDE
	REFERENCE LINE	R/L
NO ACCESS (BY ACQUISTION)	REMAINING	REM.
	RIGHT-OF-WAY	R/W
NO ACCESS (BY STATUTORY AUTHORITY)	SECTION	SEC.
	SQUARE FEET	SQ.FT.

FEE (HATCH VARIES)	
TEMPORARY LIMITED EASEMENT	
PERMANENT LIMITED EASEMENT	
PARCEL NUMBER	102
UTILITY PARCEL NUMBER	92
SIGN NUMBER (OFF PREMISE)	21-1
BUILDING	
FOUND IRON PIPE/PIN	LP (1" UNLESS NOTED)
R/W MONUMENT	•(SET)
R/W STANDARD	▲(SET)
SIGN	SIGN
SECTION CORNER SYMBOL	

STATION	STA.
TEMPORARY LIMITED EASEMENT	TLE
VOLUME	V.

CURVE DATA

LONG CHORD	LCH
LONG CHORD BEARING	LCB
RADIUS	R
DEGREE OF CURVE	D
CENTRAL ANGLE OR DELTA	DELTA
LENGTH OF CURVE	L
TANGENT	TAN

	NON COMPENSABLE	COMPENSABLE
POWER POLE		
TELEPHONE POLE		
TELEPHONE PEDESTAL		

KAPUR & ASSOCIATES, INC. CONSULTING ENGINEERS MILWAUKEE, WISCONSIN 414.351.6868

I, MICHAEL V. BECKER, REGISTERED LAND SURVEYOR, HEREBY CERTIFY THAT IN FULL COMPLIANCE WITH THE PROVISIONS OF SECTION 84.095 OF THE WISCONSIN STATUTES AND UNDER THE DIRECTION OF THE CITY OF NEW BERLIN, I HAVE SURVEYED AND MAPPED TRANSPORTATION PROJECT PLAT 2722-10-00 - 4.03 AND THAT SUCH PLAT CORRECTLY REPRESENTS ALL EXTERIOR BOUNDARIES OF THE SURVEYED LAND.

WISCONSIN MICHAEL V. BECKER S-2574 PORT WASHINGTON WISCONSIN LAND SURVEYOR

(SIGNATURE) Michael V. Becker DATE MAR. 4 2013

(PRINTED NAME) MICHAEL V. BECKER

(REGISTRATION NUMBER) S-2574

THIS PLAT AND RELOCATION ORDER ARE APPROVED FOR THE CITY OF NEW BERLIN

(SIGNATURE) [signature] DATE 3/28/13

(PRINTED NAME) Mayor Jack Chiovatero

RESERVED FOR REGISTER OF DEEDS
PROJECT NUMBER 2722-10-00-4.03
AMENDMENT NO:

4002517
REGISTER OF DEEDS WAUKESHA COUNTY, WI RECORDED ON
April 02, 2013 10:14 AM
James R Behrend
Register of Deeds
1 PG
TOTAL FEE: $25.00
TRANS FEE: $0.00
Book 1 Page 157-157

BENCHMARKS			
NUMBER	LOCATION	DESCRIPTION	ELEVATION
RBM-1	STA 165+17.66, 82.71' RT	RR SPK IN PP AT SE CORNER OF CALHOUN AND COFFE ROAD 2.8' ABG PP NO. 96-09495	874.29

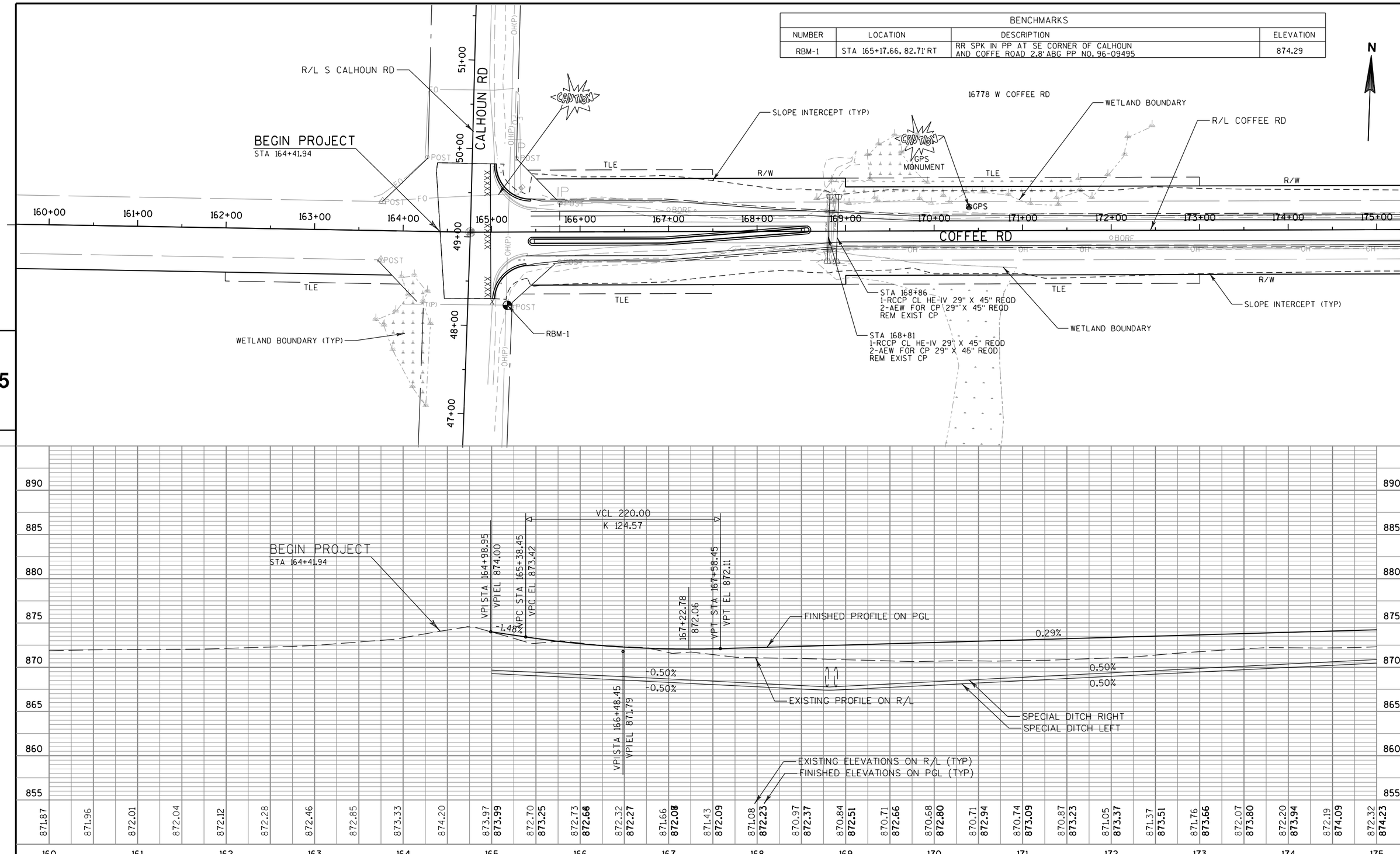

PROJECT NO: 2722-10-70	HWY: COFFEE ROAD	COUNTY: WAUKESHA	PLAN AND PROFILE: COFFEE ROAD	SHEET 125	E

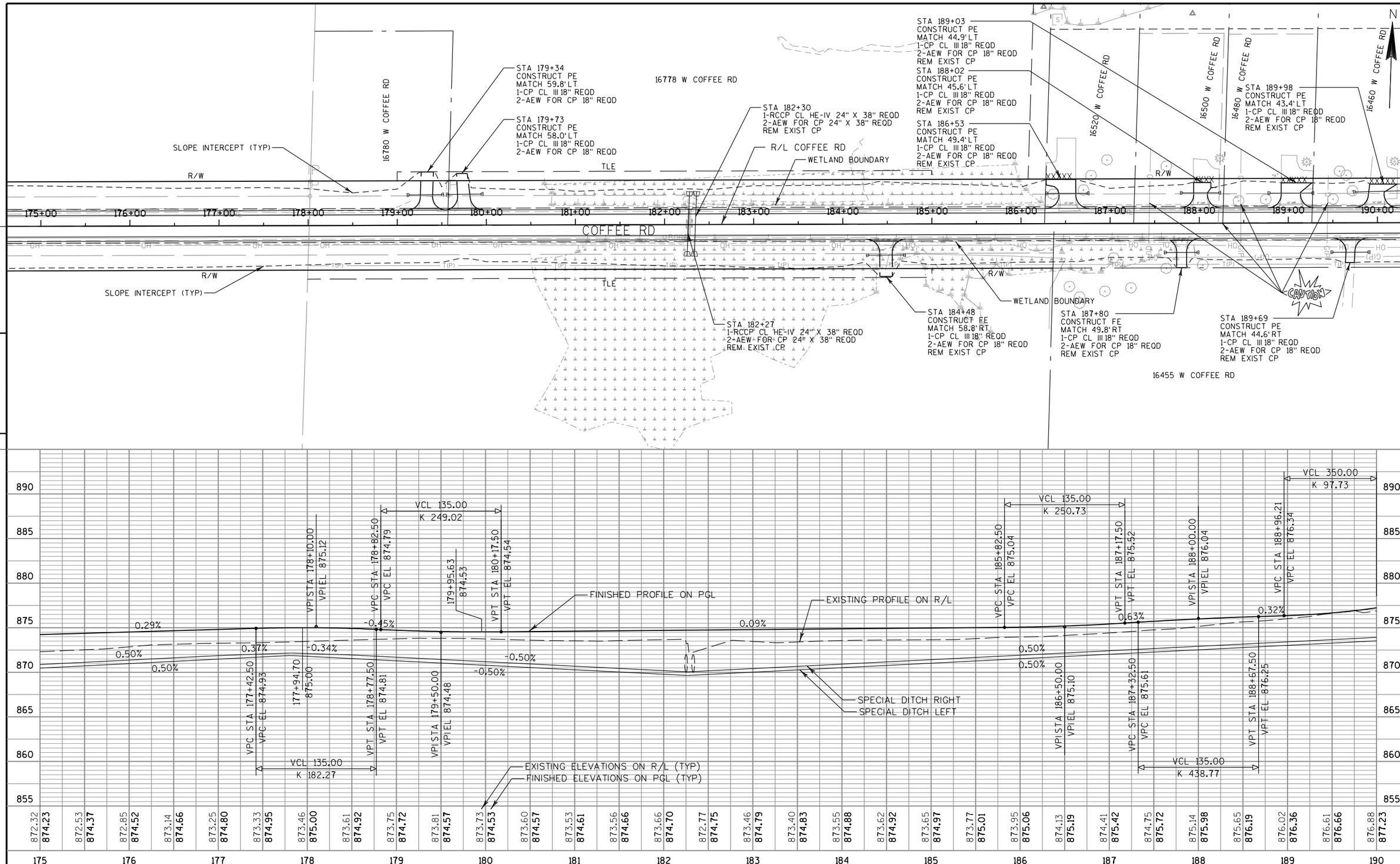

5

5

PROJECT NO: 2722-10-70	HWY: COFFEE ROAD	COUNTY: WAUKESHA	PLAN AND PROFILE: COFFEE ROAD	SHEET 126	E

BENCHMARKS			
NUMBER	LOCATION	DESCRIPTION	ELEVATION
RBM-2/H-6	STA 191+29.45, 34.88' RT	REFERENCE MARK AND RBM AT THE CENTER OF SEC. 15 T6N,R20E, CONC. MON WITH BRASS CAP LOCATED 35' SOUTH OF SEC CORNER	880.46

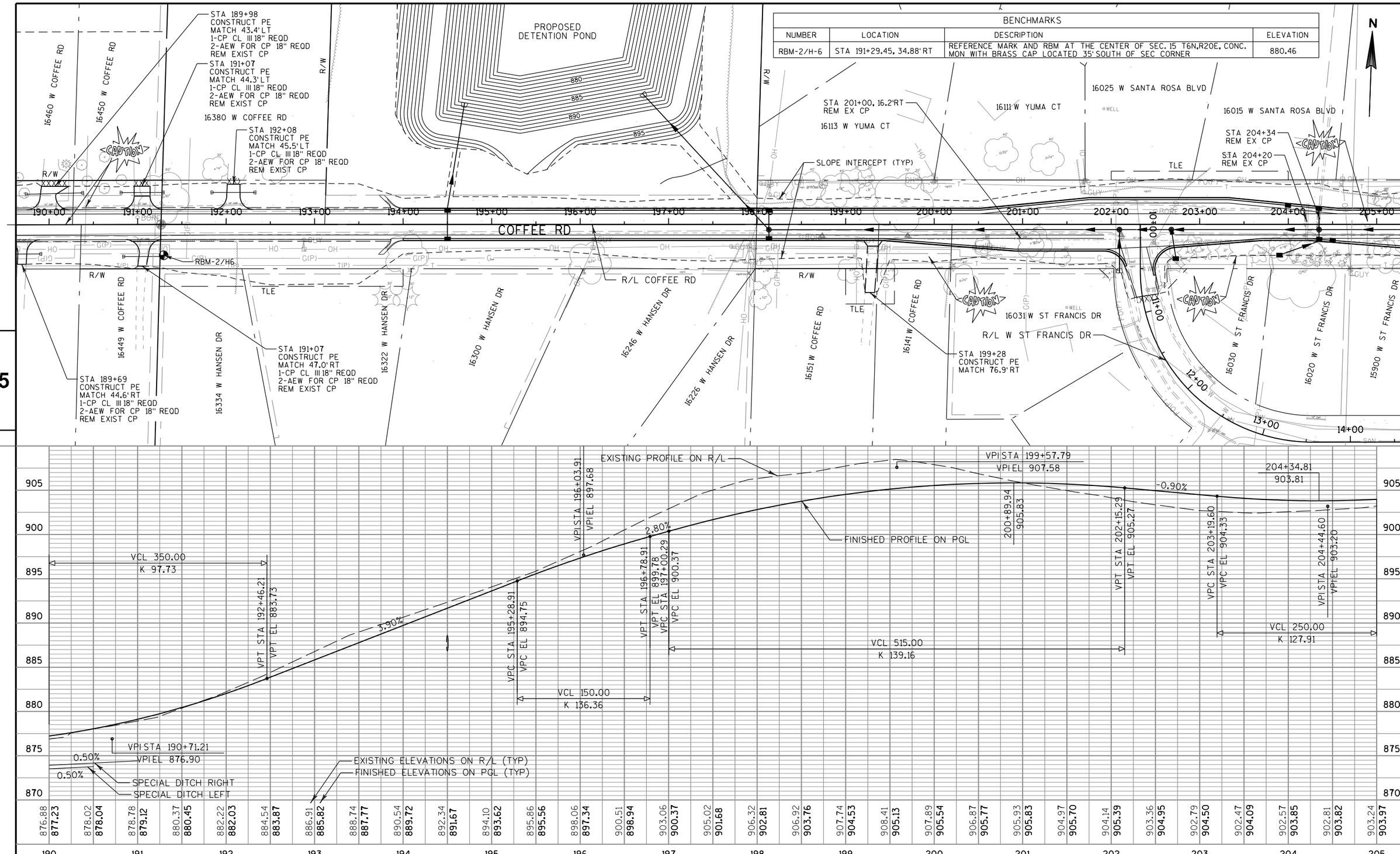

5

5

PROJECT NO: 2722-10-70	HWY: COFFEE ROAD	COUNTY: WAUKESHA	PLAN AND PROFILE: COFFEE ROAD	SHEET 127	E

FILE NAME : S:\Wauk_Co\NewBerlin\Gov\08.0099 Coffee Rd\Design\050103_PP.dgn PLOT DATE : 10/30/2013 PLOT BY : Nick_B PLOT NAME : PLOT SCALE : 1:100

WISDOT/CADDS SHEET 40

BENCHMARKS			
NUMBER	LOCATION	DESCRIPTION	ELEVATION
RBM-3	STA 218+69.89, 193.15' LT	CHISLED CROSS IN TOP OF S. SIDE OF HYDRANT FLANGE 2.7' ABG. AT NE CORNER OF COFFEE RD. AND MOORLAND RD.	924.65
BM-C	STA 213+46.28, 57.88' LT	SE FLANGE BOLT OF HYDRANT 40'+/- N. OF MONTERAY DR. E. SIDE	914.86
BM-D	STA 206+93.03, 27.81' LT	RR SPK IN S. FACE OF PP NO. 69-5435 AT NE CORNER OF 159TH AND COFFE RD.	907.19

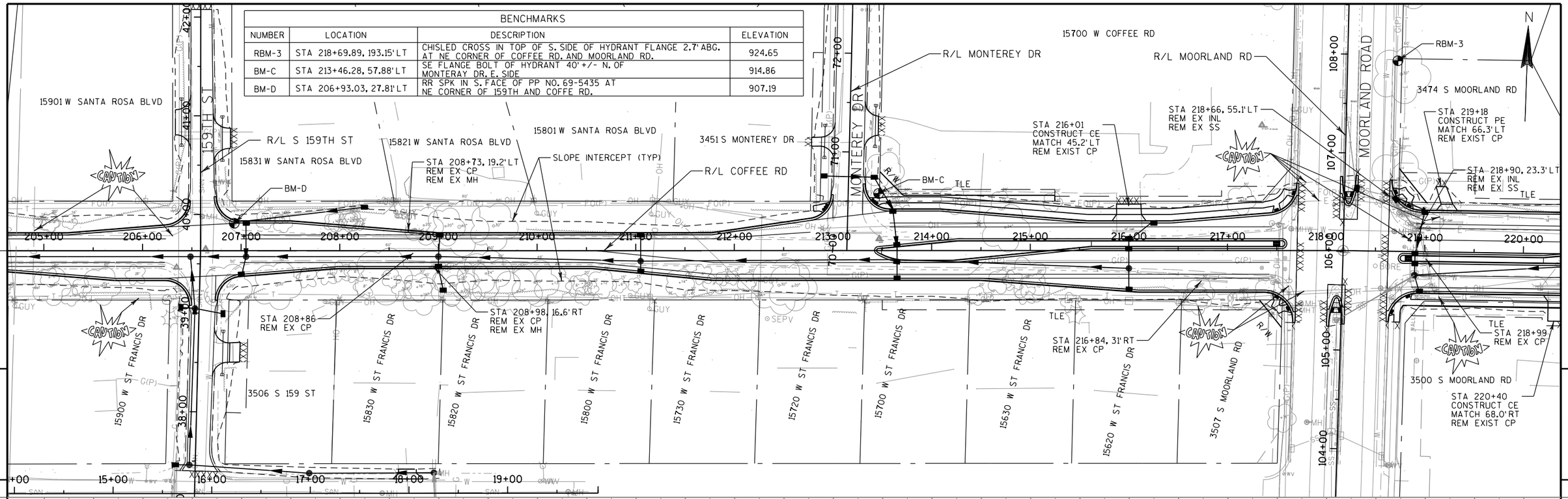

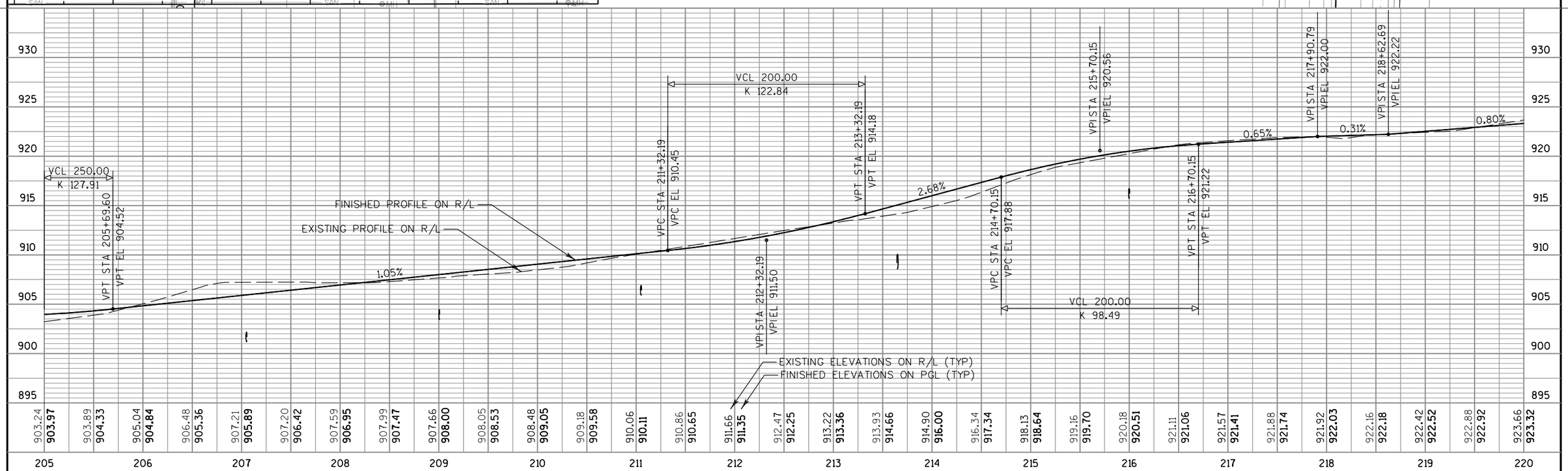

PROJECT NO: 2722-10-70	HWY: COFFEE ROAD	COUNTY: WAUKESHA	PLAN AND PROFILE: COFFEE ROAD	SHEET 128	E

FILE NAME : S:\Wauk_Co\NewBerlin\Gov\08.0099 Coffee Rd\Design\050104_PP.dgn PLOT DATE : 10/30/2013 PLOT BY : Nick_B PLOT NAME : PLOT SCALE : 1:100

WISDOT/CADDS SHEET 40

BENCHMARKS			
NUMBER	LOCATION	DESCRIPTION	ELEVATION
BM-A	STA 231+51.37, 34.41' RT	NW FLANGE OF HYD 100'+/- E. OF DRIVEWAY TO NEW BERLIN FUNERAL HOME	909.25
BM-B	STA 266+69.15, 30.44' RT	NW FLANGE BOLT OF HYDRANT 10'+/- E. OF HOUSE #15385 COFFEE RD.	924.39

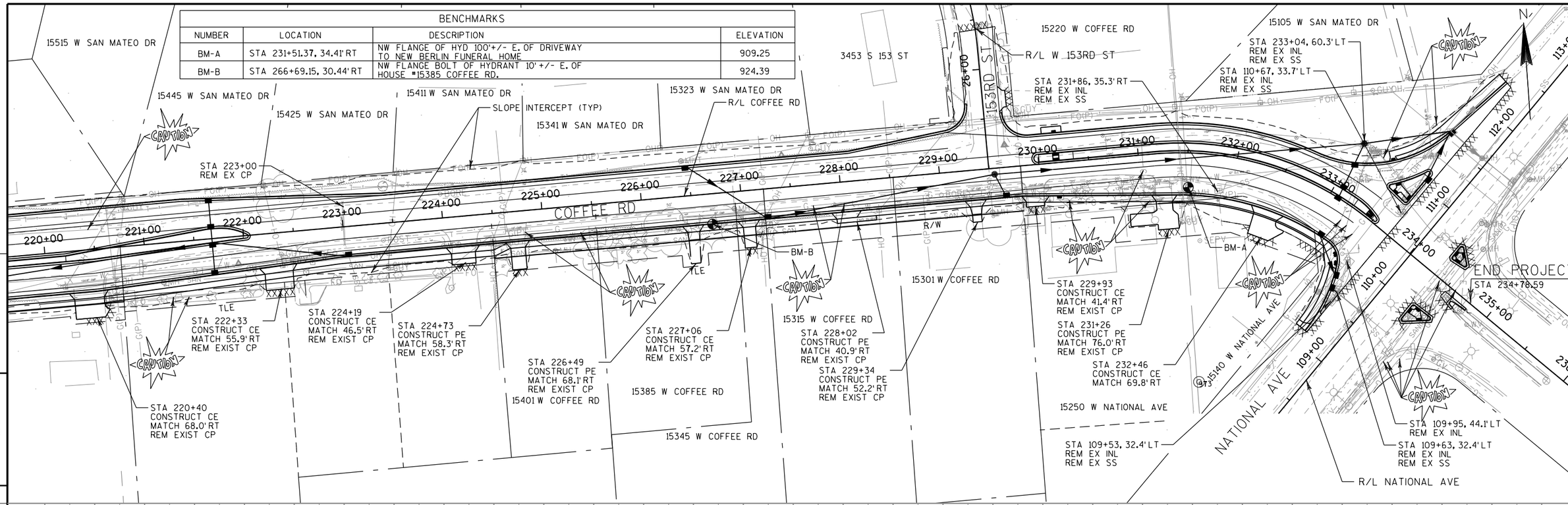

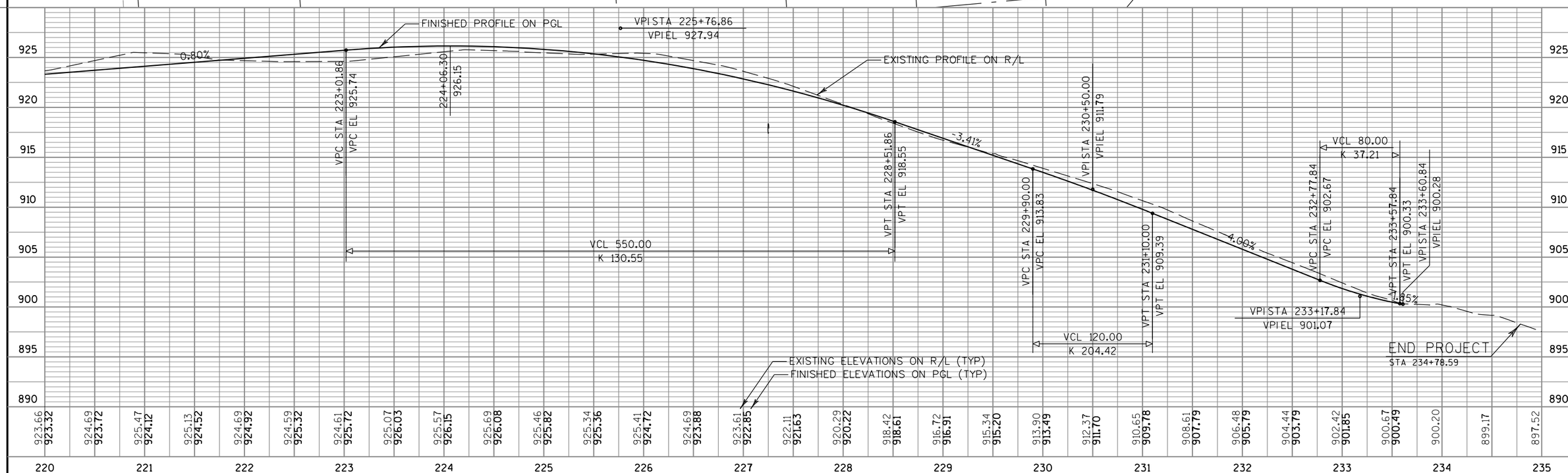

5

5

PROJECT NO: 2722-10-70	HWY: COFFEE ROAD	COUNTY: WAUKESHA	PLAN AND PROFILE: COFFEE ROAD	SHEET 129	E

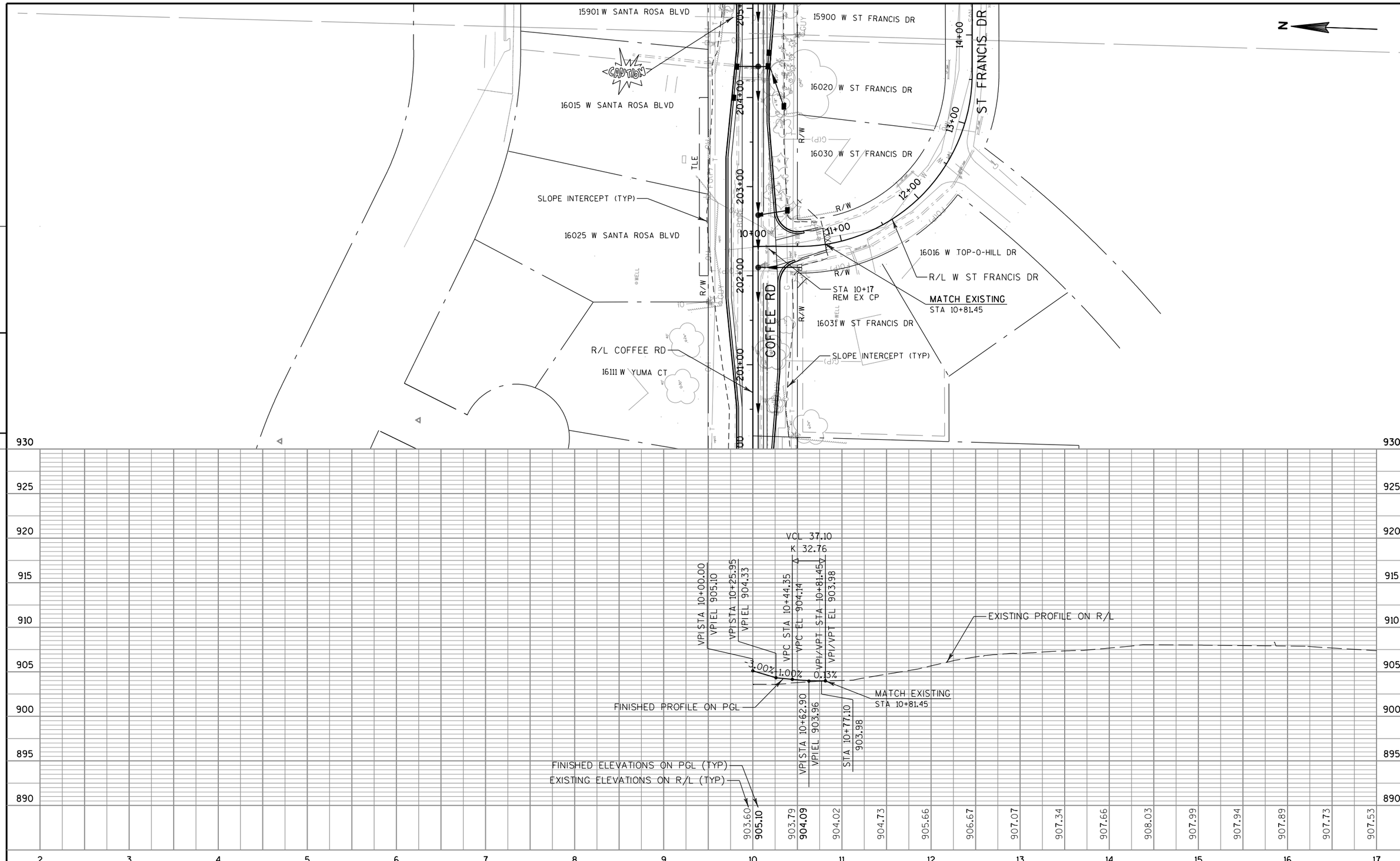

PROJECT NO: 2722-10-70	HWY: COFFEE ROAD	COUNTY: WAUKESHA	PLAN AND PROFILE: W ST FRANCIS DRIVE	SHEET 130	E

FILE NAME : S:\Wauk_Co\NewBerlin\Gov\08.0099 Coffee Rd\Design\050111_PP.dgn PLOT DATE : 10/30/2013 PLOT BY : Nick_B PLOT NAME : PLOT SCALE : 1:100

WISDOT/CADDS SHEET 40

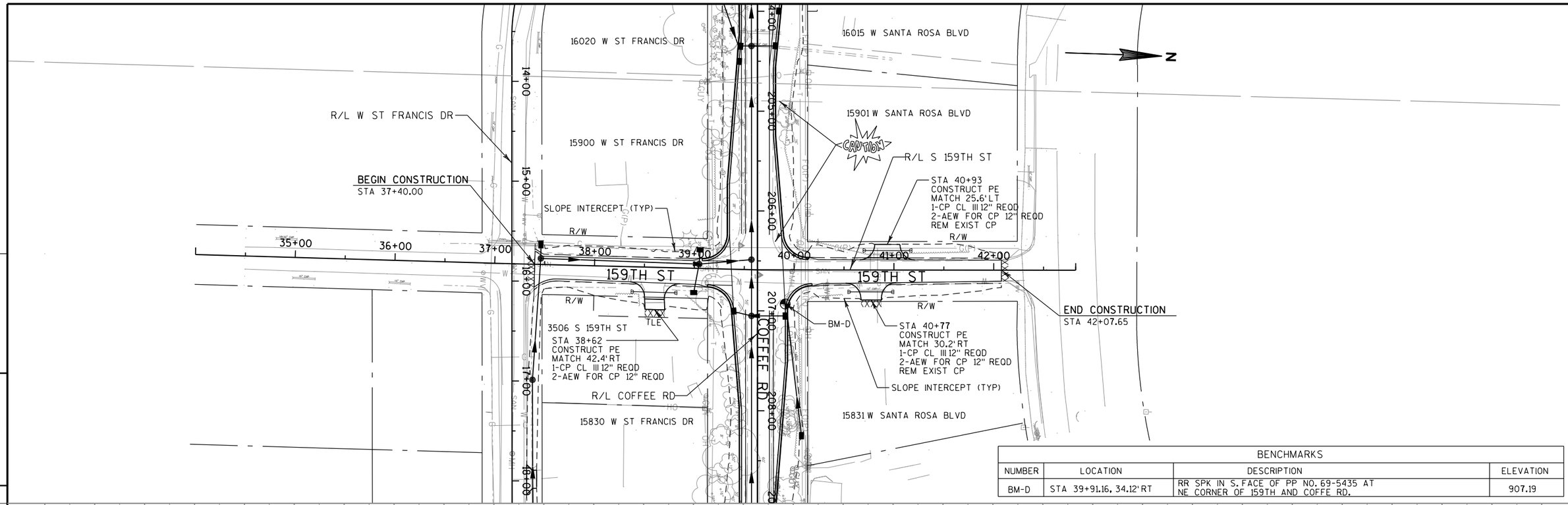

BENCHMARKS			
NUMBER	LOCATION	DESCRIPTION	ELEVATION
BM-D	STA 39+91.16, 34.12' RT	RR SPK IN S. FACE OF PP NO. 69-5435 AT NE CORNER OF 159TH AND COFFE RD.	907.19

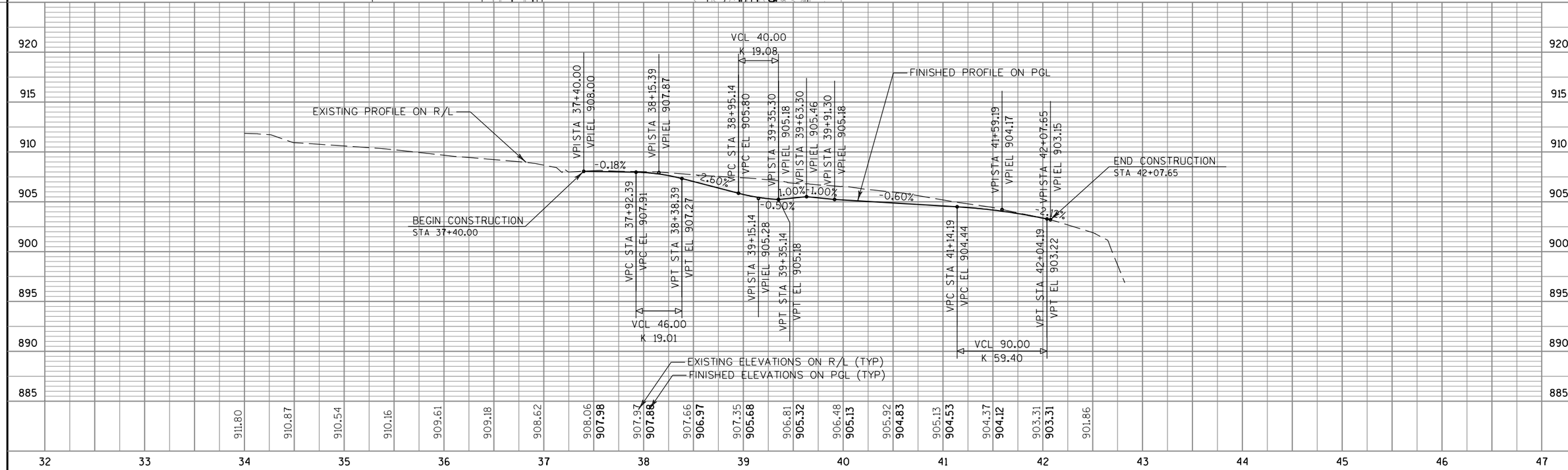

PROJECT NO: 2722-10-70	HWY: COFFEE ROAD	COUNTY: WAUKESHA	PLAN AND PROFILE: 159TH STREET	SHEET 131	E

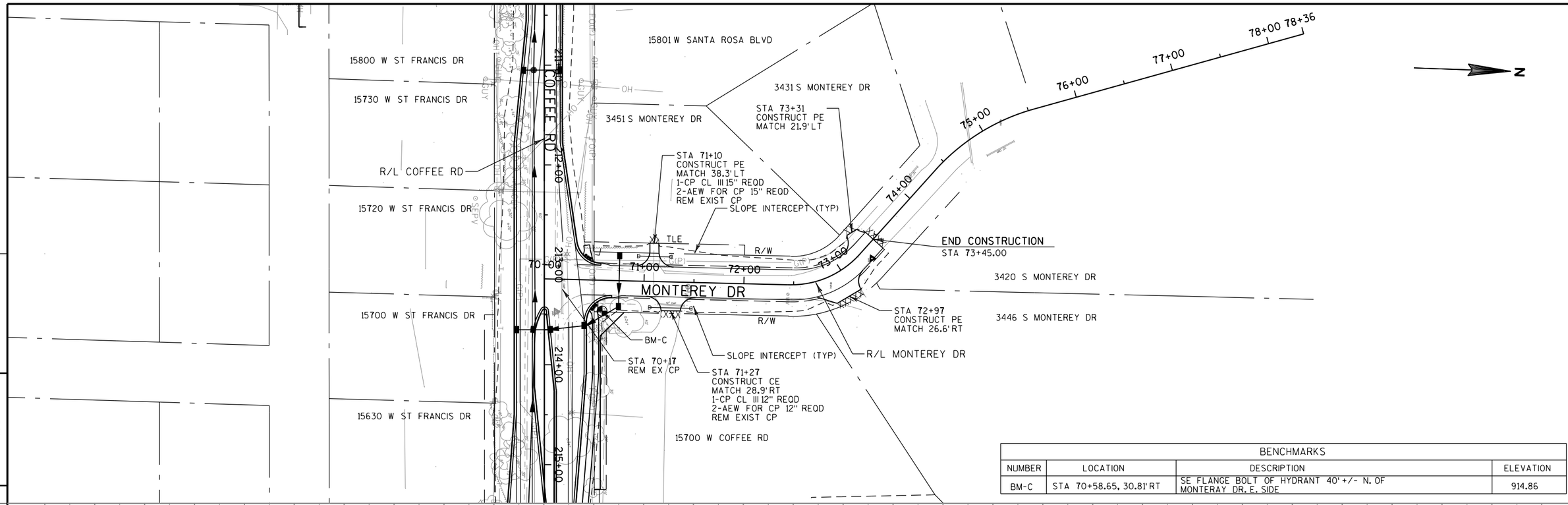

BENCHMARKS			
NUMBER	LOCATION	DESCRIPTION	ELEVATION
BM-C	STA 70+58.65, 30.81' RT	SE FLANGE BOLT OF HYDRANT 40' +/- N. OF MONTERAY DR. E. SIDE	914.86

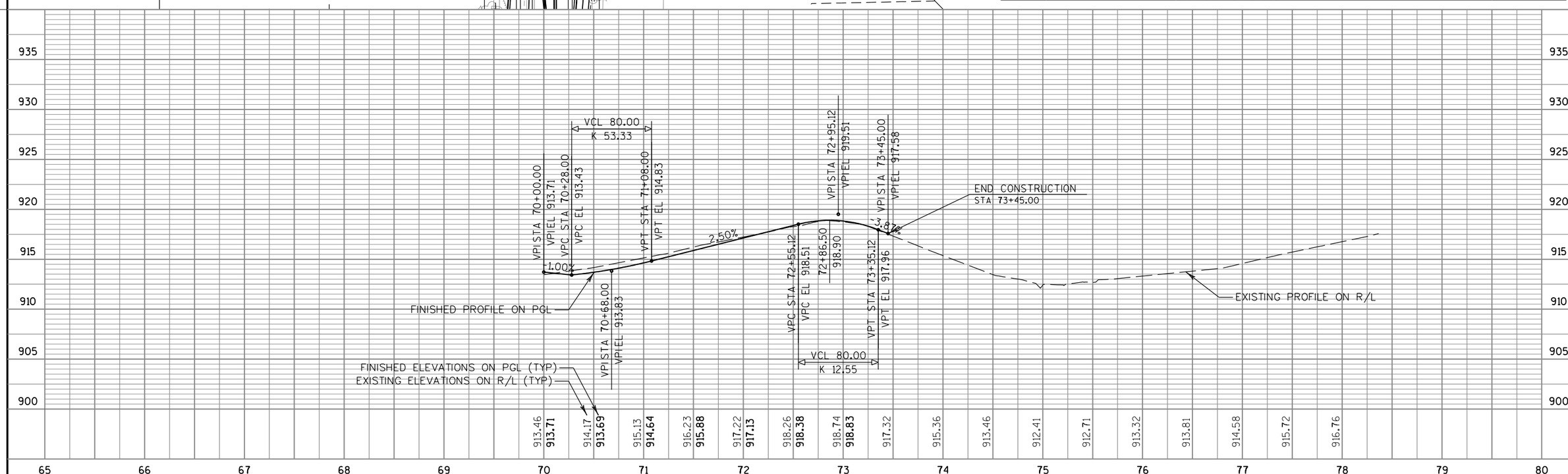

PROJECT NO: 2722-10-70	HWY: COFFEE ROAD	COUNTY: WAUKESHA	PLAN AND PROFILE: MONTEREY DRIVE	SHEET 132	E

FILE NAME : S:\Wauk_Co\NewBerlin\Gov\08.0099 Coffee Rd\Design\050131_PP.dgn PLOT DATE : 10/30/2013 PLOT BY : Nick_B PLOT NAME : PLOT SCALE : 1:100

WISDOT/CADDS SHEET 40

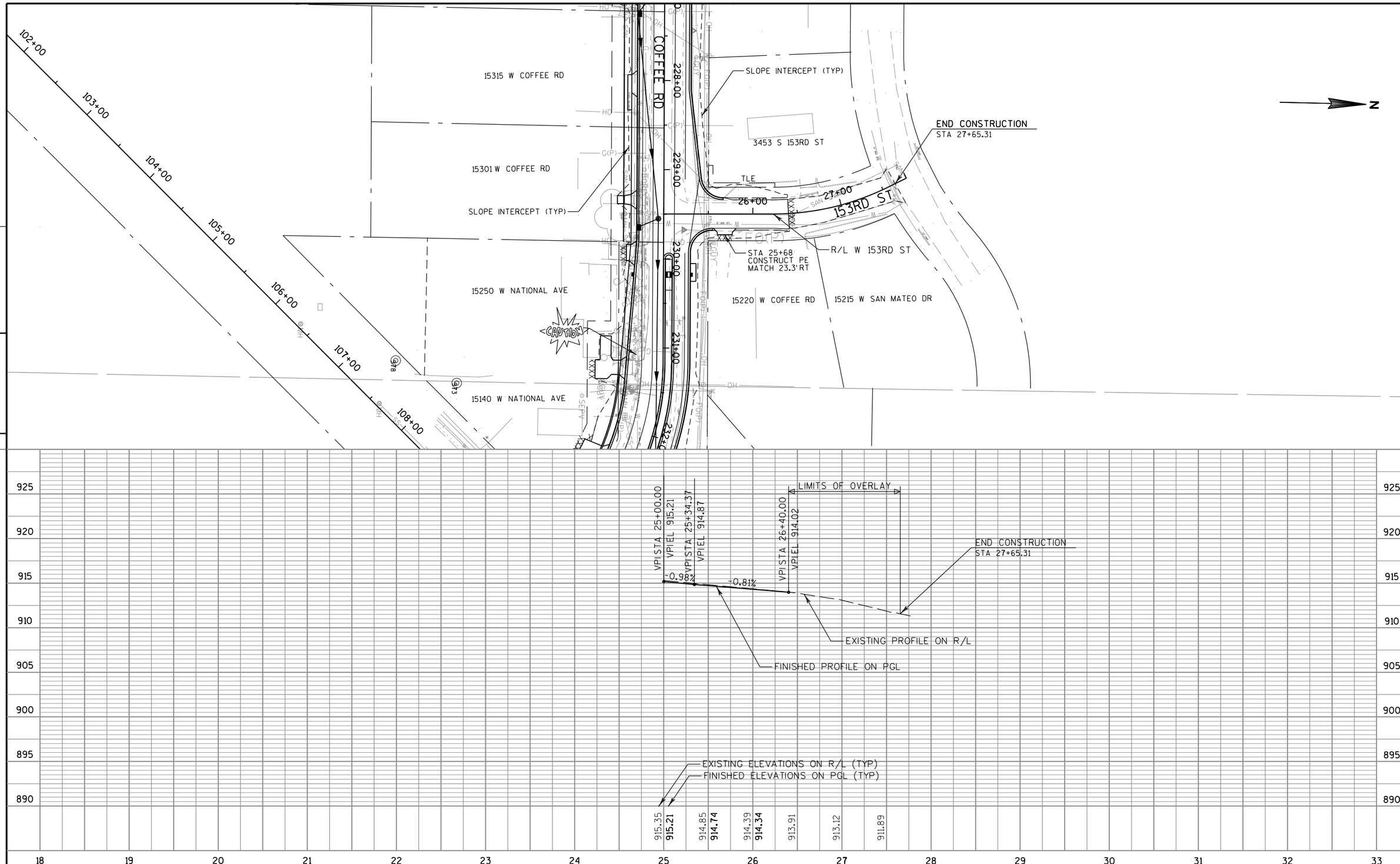

PROJECT NO: 2722-10-70	HWY: COFFEE ROAD	COUNTY: WAUKESHA	PLAN AND PROFILE: W 153RD STREET	SHEET 133	E

FILE NAME : S:\Wauk_Co\NewBerlin\Gov\08.0099 Coffee Rd\Design\050141_PP.dgn PLOT DATE : 10/30/2013 PLOT BY : Nick_B PLOT NAME : PLOT SCALE : 1:100

WISDOT/CADDS SHEET 40

Standard Detail Drawing List

08A05-18B	INLET COVERS TYPE B, B-A, C, MS, MS-A, & WM
08A05-18D	INLET COVER, TYPE BW, Z MANHOLE COVERS, TYPE K, J, J-S, L & M
08A08-01	CATCH BASINS 3-FT, 4-FT, 5-FT AND 6-FT DIAMETER
08B09-01	MANHOLES 3-FT, 4-FT, 5-FT, 6-FT, 7-FT AND 8-FT DIAMETER
08B10-01	MANHOLES 3X3-FT, 4X4-FT, 5X5-FT AND 6X6-FT
08C08-01	INLETS MEDIAN 1 AND 2 GRATE
08D01-17	CONCRETE CURB, CONCRETE CURB AND GUTTER AND TIES
08D04-05	CONCRETE SURFACE DRAINS & ASPHALTIC FLUMES
08D05-15A	CURB RAMPS TYPES 1 AND 1-A
08D05-15B	CURB RAMPS TYPES 2 AND 3
08D05-15C	CURB RAMPS TYPES 4A AND 4A1
08D05-15D	CURB RAMPS TYPE 4B AND 4B1
08D05-15E	CURB RAMPS TYPES 5, 6, 7A, 7B & 8
08E04-02	SOD OR MASONRY AND SOD DITCH CHECKS
08E08-03	TYPICAL INSTALLATIONS OF EROSION BALES / TEMPORARY DITCH CHECKS
08E09-06	SILT FENCE
08E10-02	INLET PROTECTION TYPE A, B, C AND D
08F01-11	APRON ENDWALLS FOR CULVERT PIPE
08F02-01	APRON ENDWALLS FOR PIPE ARCH AND ELLIPTICAL PIPE
08F04-07	JOINT TIES FOR CONCRETE PIPE AND CONCRETE COLLAR DETAIL
08F05-01	CLASS "B" BEDDING FOR CULVERT PIPE OR STORM SEWER
09B02-07	CONDUIT
09B04-10	PULL BOX
09C02-06	CONCRETE BASES, TYPES 1, 2 & 5
09C03-03	TRANSFORMER/PEDESTAL BASES
09C06-05	CONCRETE CONTROL CABINET BASE, TYPE 9, SPECIAL
09C11-03	CONCRETE BASE TYPE 10
09C12-03A	CONCRETE BASE TYPE 13
09C12-03B	CONCRETE BASE TYPE 13
09C13-01	CONCRETE BASE TYPE 10 & TYPE 13 EXTENSION
09D01-04	CABINET SERVICE INSTALLATION (METER BREAKER PEDESTAL)
09D02-02	SIGNAL OR LIGHTING CONTROL CABINET
09E01-12B	POLE MOUNTINGS FOR TRAFFIC SIGNALS AND LIGHTING UNITS, TYPE 3 (HEAVY DUTY)
09E01-12C	POLE MOUNTINGS FOR TRAFFIC SIGNALS AND LIGHTING UNITS, TYPE 4
09E01-12G	HARDWARE DETAILS FOR POLE MOUNTINGS
09E03-04	NON-FREEWAY LIGHTING UNIT POLE WIRING
09E06-04	TRAFFIC SIGNAL STANDARD POLY BRACKET MOUNTINGS (TYPICAL) 13 FT. OR 15 FT.
09E07-05	TRAFFIC SIGNAL STANDARD PEDESTRIAN AND FLASHER TYPICAL MOUNTING DETAILS
09E08-04A	TYPE 9 POLE 15'-30' MONOTUBE ARM
09E08-04C	TYPE 12 POLE 35'-55' MONOTUBE ARM
09E08-04E	GENERAL NOTES AND HARDWARE DETAILS FOR TYPE 9, 10, 12 & 13 POLES WITH MONOTUBE ARMS
09F15-03B	LOOP DETECTOR INSTALLED IN BASE COURSE WITH PULL (SPLICE) BOX OFF ROADWAY (OPTION 2)
09G01-03A	SPAN WIRE TEMPORARY TRAFFIC SIGNAL
09G01-03B	SPAN WIRE TEMPORARY TRAFFIC SIGNAL
09G01-03C	SPAN WIRE TEMPORARY TRAFFIC SIGNAL
09G01-03D	SPAN WIRE TEMPORARY TRAFFIC SIGNAL
09G01-03E	SPAN WIRE TEMPORARY TRAFFIC SIGNAL
09G01-03F	SPAN WIRE TEMPORARY TRAFFIC SIGNAL
09G01-03G	SPAN WIRE TEMPORARY TRAFFIC SIGNAL
10A02-02	IDENTIFICATION PLAQUES LIGHT POLES
11B02-02	CONCRETE MEDIAN NOSE
13C01-15	CONCRETE PAVEMENT LONGITUDINAL JOINTS AND TIES
13C18-02A	CONCRETE PAVEMENT JOINTING
13C18-02B	CONCRETE PAVEMENT STEEL REINFORCEMENT
13C18-02C	CONCRETE PAVEMENT JOINT TIES
13C18-02D	CONCRETE PAVEMENT JOINTING AT UTILITY FIXTURES
14A02-01	TREE PLANTING DETAIL
14B29-01	SAFETY EDGE
15A03-02A	FLEXIBLE MARKER POST FOR CULVERT END
15A03-02B	FLEXIBLE MARKER POST FOR CULVERT END
15C02-04A	BARRICADES AND SIGNS FOR MAINLINE CLOSURES
15C02-04B	BARRICADES AND SIGNS FOR MAINLINE CLOSURES
15C03-01	BARRICADES AND SIGNS FOR SIDEROAD CLOSURES
15C05-01	TRAFFIC CONTROL, ADVANCE WARNING SIGNS 40 M.P.H. OR LESS
15C07-12A	PAVEMENT MARKING SYMBOLS
15C07-12B	PAVEMENT MARKING WORDS
15C07-12C	PAVEMENT MARKING ARROWS
15C08-15A	PAVEMENT MARKING (MAINLINE)

6

Standard Detail Drawing List

15C08-15B	PAVEMENT MARKING (INTERSECTIONS)
15C08-15E	PAVEMENT MARKING (LEFT TURN LANE)
15C08-15F	PAVEMENT MARKING (ISLANDS, STOP LINE & CROSS WALK)
15C12-03	TRAFFIC CONTROL FOR LANE CLOSURE (SUITABLE FOR MOVING OPERATIONS)
15C18-03	MEDIAN ISLAND MARKING
15C20-01	YIELD MARKING
15C27-01	DOUBLE ARROW WARNING SIGN PLACEMENT
15C29-02A	BICYCLE LANE MARKING
15C29-02B	BICYCLE LANE MARKING
15C29-02C	URBAN BICYCLE LANE MARKING
15C29-02D	URBAN BICYCLE LANE MARKING
15C29-02E	PAVEMENT MARKING FOR BIKE LANES
15C33-01	STOP LINE AND CROSSWALK PAVEMENT MARKING
15D20-01	TRAFFIC CONTROL, SINGLE LANE CLOSURE, NON-FREEWAY/EXPRESSWAY
15D21-01	TRAFFIC CONTROL, INTERSECTION WITHIN SINGLE LANE CLOSURE
15D30-01	TRAFFIC CONTROL, SIDEWALK CLOSURE

6

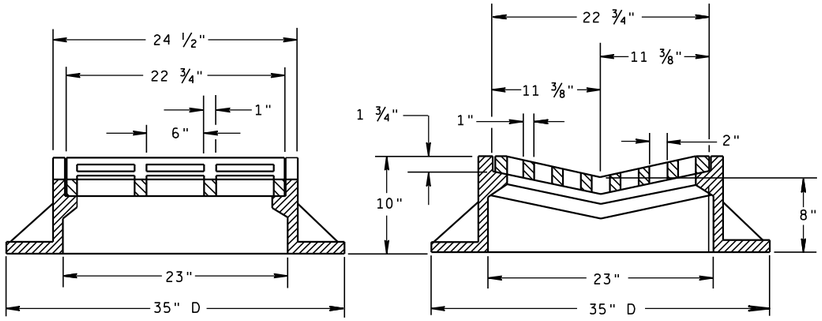

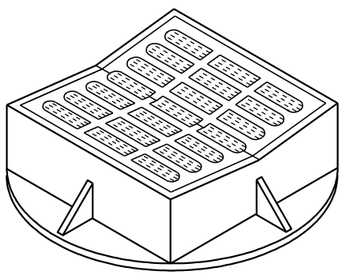

TYPE "B"

(APPROXIMATE WEIGHT 405 LBS.)

FRAME..... 294 LBS.
GRATE..... 111 LBS.

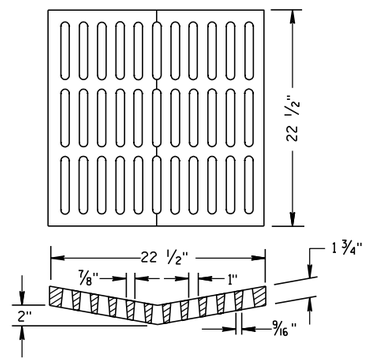

ALTERNATIVE GRATE FOR TYPE "B" COVER

(APPROXIMATE GRATE WEIGHT 134 LBS.)

USE WHERE PEDESTRIAN OR BICYCLE TRAFFIC IS POSSIBLE.

NOTED AS TYPE B-A ON THE DRAINAGE TABLE

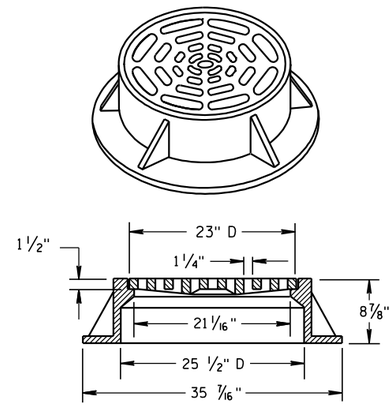

TYPE "C"

(APPROXIMATE WEIGHT 259 LBS.)

FRAME..... 152 LBS.
GRATE..... 107 LBS.

GENERAL NOTES

DETAILS OF CONSTRUCTION, MATERIALS AND WORKMANSHIP NOT SHOWN ON THIS DRAWING SHALL CONFORM TO THE PERTINENT REQUIREMENTS OF THE STANDARD SPECIFICATIONS AND THE APPLICABLE SPECIAL PROVISIONS.

DETAIL DRAWINGS FOR PROPOSED ALTERNATE DESIGNS FOR CATCH BASIN, MANHOLE AND INLET COVERS SHALL BE SUBMITTED TO THE ENGINEER FOR APPROVAL PROVIDING THAT SUCH ALTERNATE DESIGNS MAKE PROVISION FOR EQUIVALENT CAPACITY AND STRENGTH.

ROUND FRAMES AND COVERS SHALL HAVE CONTINUOUSLY MACHINED BEARING SURFACES TO PREVENT ROCKING AND RATTLING.

THE ACTUAL WEIGHT OF COVERS MAY VARY WITHIN 5 PERCENT, PLUS OR MINUS, OF THE APPROXIMATE WEIGHT.

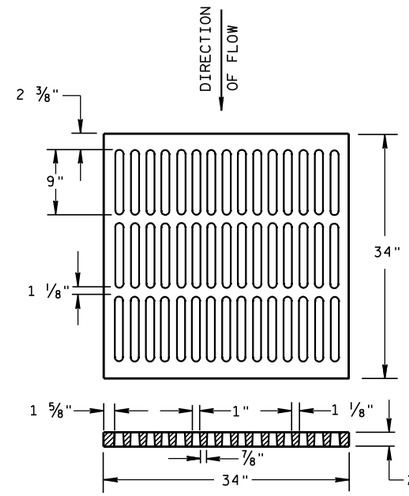

ALTERNATIVE TYPE "MS"

(APPROXIMATE GRATE WEIGHT 329 LBS.)

USE WHERE PEDESTRIAN OR BICYCLE TRAFFIC IS PERMITTED

NOTED AS TYPE MS-A ON THE DRAINAGE TABLE

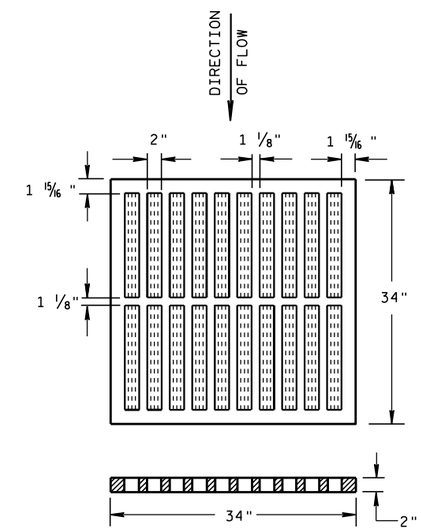

TYPE "MS"

(APPROXIMATE GRATE WEIGHT 268 LBS.)

USE ON FREEWAYS AND EXPRESSWAYS

NOTED AS TYPE MS ON DRAINAGE TABLE

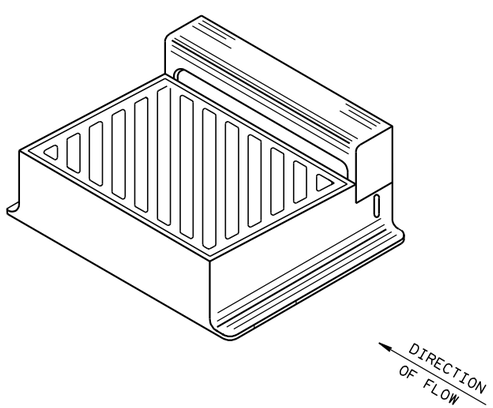

DIAGONAL SLOTS, SHALL BE ORIENTED TO THE DIRECTION OF FLOW AS ILLUSTRATED. GRATES ARE MANUFACTURED TO BE REVERSIBLE.

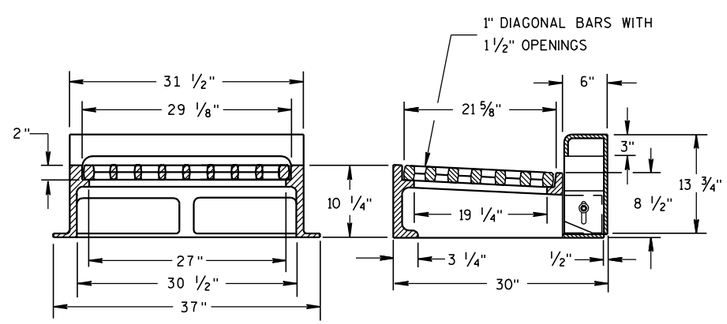

NOTE: CURB BOX HEIGHT ADJUSTABLE 6" TO 9"

TYPE "WM"

(APPROXIMATE WEIGHT 648 LBS.)

FRAME..... 355 LBS.
GRATE..... 156 LBS.
CURB BOX..... 137 LBS.

INLET COVERS
TYPE B, B-A, C, MS, MS-A, & WM

STATE OF WISCONSIN
DEPARTMENT OF TRANSPORTATION

APPROVED

6/5/2012 — DATE

/S/ Jerry H. Zogg — ROADWAY STANDARDS ENGINEER

FHWA

ENT

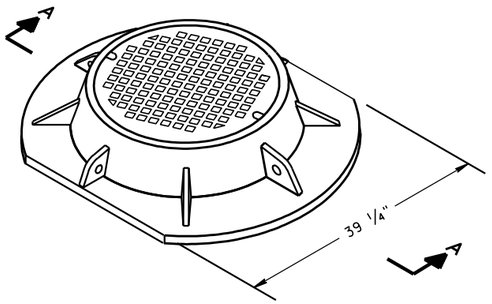

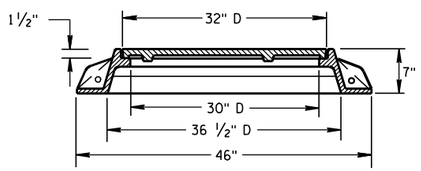

SECTION A-A

TYPE "K"

(APPROXIMATE WEIGHT 439 LBS.)

FRAME.....216 LBS.
LID.....223 LBS.

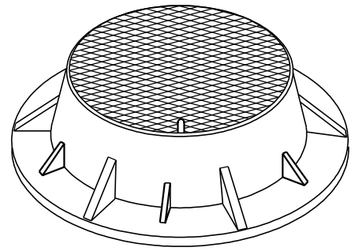

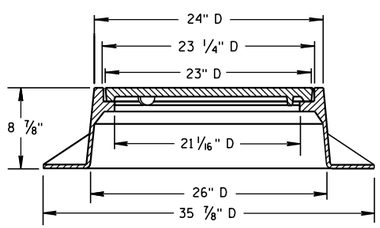

TYPE "J"

(APPROXIMATE WEIGHT 267 LBS.)

FRAME.....152 LBS.
LID.....115 LBS.

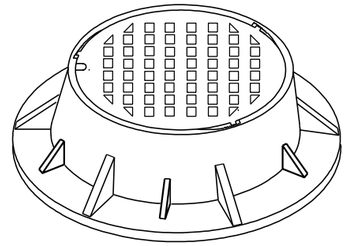

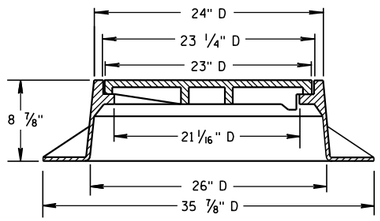

TYPE "J" SPECIAL

TYPE "B" NON-ROCKING SELF-SEAL LID

(APPROXIMATE WEIGHT 267 LBS.)

FRAME.....158 LBS.
LID.....109 LBS.

(NOTED AS TYPE J-S ON THE DRAINAGE TABLE)

GENERAL NOTES

DETAILS OF CONSTRUCTION, MATERIALS AND WORKMANSHIP NOT SHOWN ON THIS DRAWING SHALL CONFORM TO THE PERTINENT REQUIREMENTS OF THE STANDARD SPECIFICATIONS AND THE APPLICABLE SPECIAL PROVISIONS.

DETAIL DRAWINGS FOR PROPOSED ALTERNATE DESIGNS FOR MANHOLE COVERS SHALL BE SUBMITTED TO THE ENGINEER FOR APPROVAL PROVIDING THAT SUCH ALTERNATE DESIGNS MAKE PROVISION FOR EQUIVALENT CAPACITY AND STRENGTH.

ROUND FRAMES AND COVERS SHALL HAVE CONTINUOUSLY MACHINED BEARING SURFACES TO PREVENT ROCKING AND RATTLING.

THE ACTUAL WEIGHT OF COVERS MAY VARY WITHIN 5 PERCENT, PLUS OR MINUS, OF THE APPROXIMATE WEIGHT.

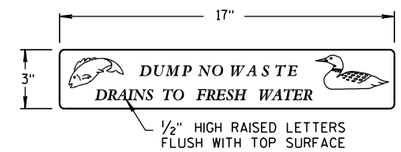

LOGO DETAIL

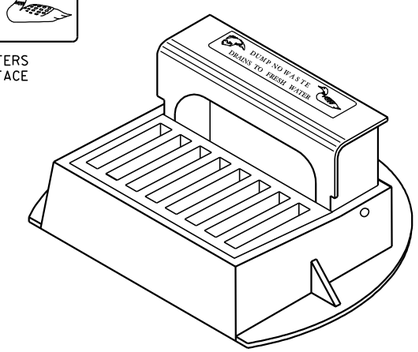

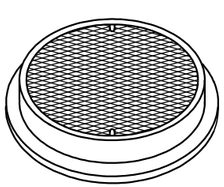

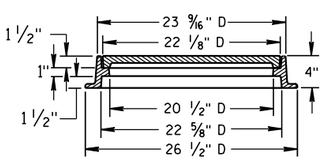

TYPE "L"

(APPROXIMATE WEIGHT 158 LBS.)

FRAME.....81 LBS.
LID.....77 LBS.

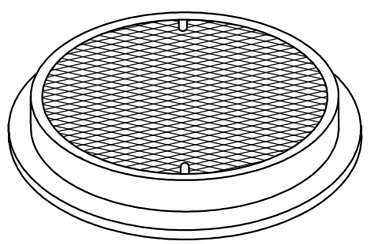

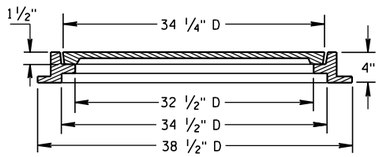

TYPE "M"

(APPROXIMATE WEIGHT 377 LBS.)

FRAME..... 125 LBS.
LID..... 252 LBS.

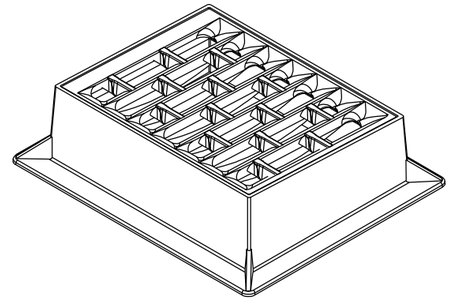

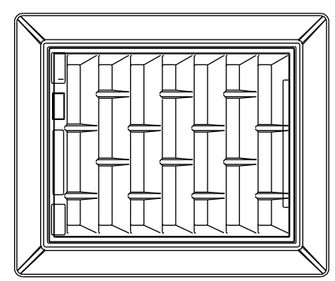

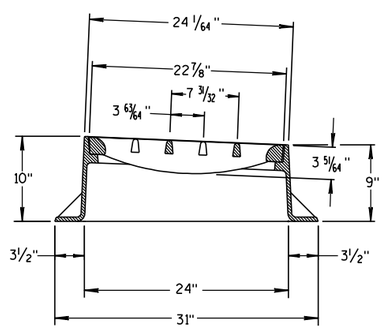

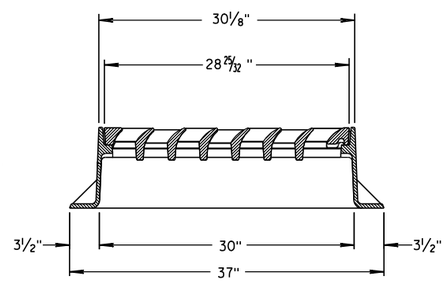

INLET COVER TYPE "BW"

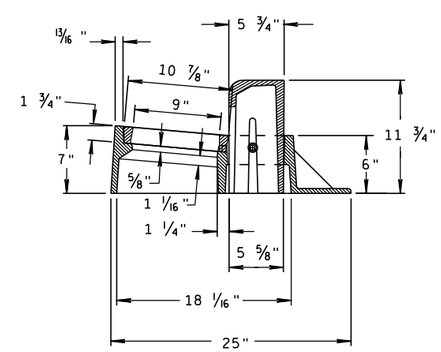

INLET COVER TYPE "Z"

(APPROXIMATE WEIGHT 344 LBS.)

FRAME.....206 LBS.
GRATE..... 46 LBS.
CURB BOX..... 92 LBS.

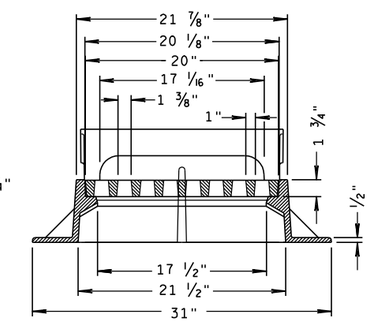

INLET COVERS, TYPE BW, Z
MANHOLE COVERS, TYPE
K, J, J-S, L & M

STATE OF WISCONSIN
DEPARTMENT OF TRANSPORTATION

APPROVED

6/5/2012 — DATE

/S/ Jerry H. Zogg — ROADWAY STANDARDS DEVELOPMENT ENGINEER

FHWA

6

S.D.D. 8 A 5-18d

6

S.D.D. 8 A 5-18d

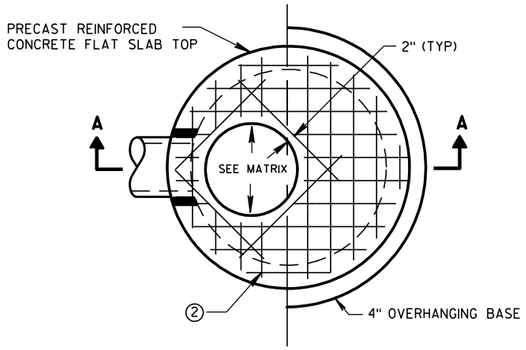

PLAN VIEW CIRCULAR OPENING

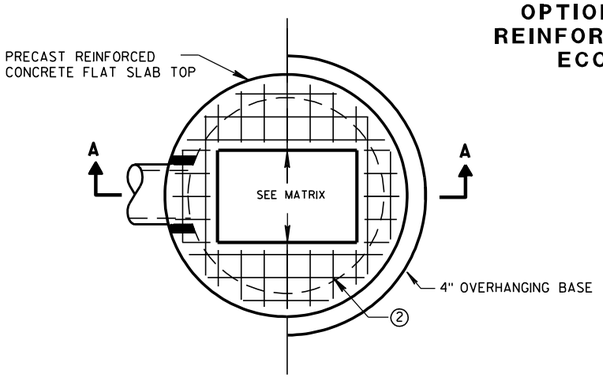

PLAN VIEW RECTANGULAR OPENING

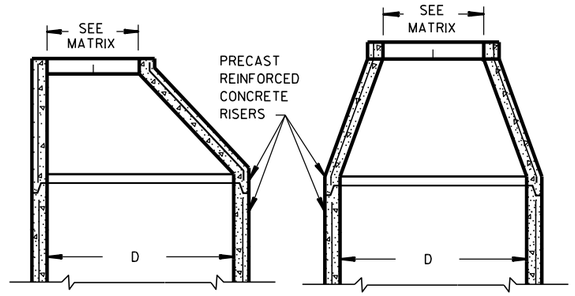

OPTIONAL PRECAST REINFORCED CONCRETE ECCENTRIC TOP

OPTIONAL PRECAST REINFORCED CONCRETE CONCENTRIC TOP

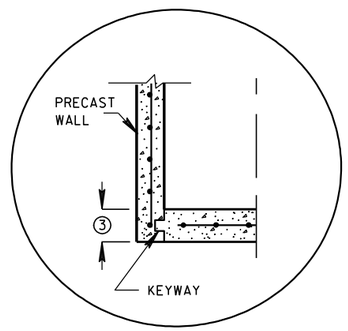

PRECAST REINFORCED CONCRETE WITH INTEGRAL BASE OPTION

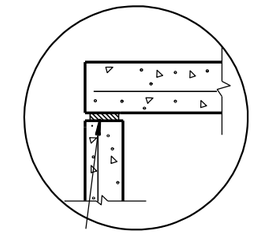

TOP WITH PLAIN END JOINT

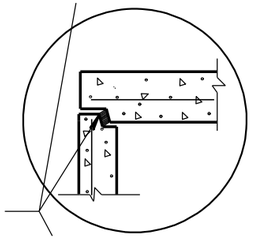

JOINTS TO BE SEALED WITH A BUTYL RUBBER SEAL PER SEALANT MANUFACTURERS RECOMMENDATIONS CONFORMING TO ASTM C 990 (TYP)

TOP WITH TONGUE AND GROOVE JOINT

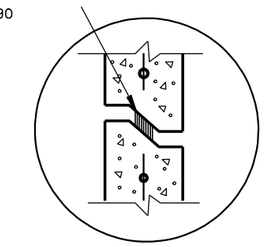

RISER WITH TONGUE AND GROOVE JOINT

DETAIL "B"

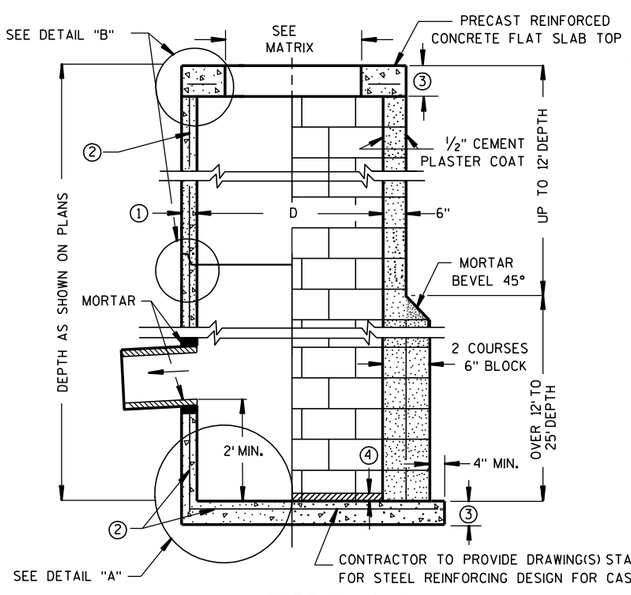

SECTION A-A

PRECAST REINFORCED CONCRETE WITH MONOLITHIC BASE

CONCRETE BLOCK WITH CAST-IN-PLACE OR PRECAST REINFORCED CONCRETE BASE ②

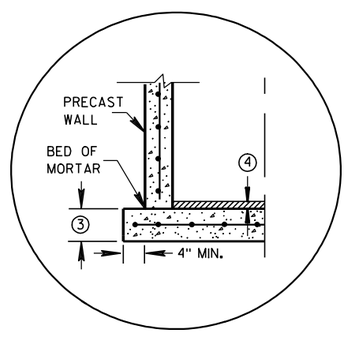

SEPERATE PRECAST REINFORCED CONCRETE BASE OPTION

DETAIL "A"

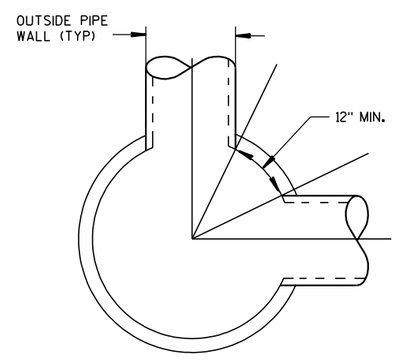

DETAIL "C"

GENERAL NOTES

DETAILS OF CONSTRUCTION, MATERIALS AND WORKMANSHIP NOT SHOWN ON THIS DRAWING SHALL CONFORM TO THE PERTINENT REQUIREMENTS OF THE STANDARD SPECIFICATIONS AND THE APPLICABLE SPECIAL PROVISIONS.

UNLESS OTHERWISE AUTHORIZED IN WRITING BY THE ENGINEER, THE CONTRACTOR SHALL NOT ORDER AND DELIVER PRECAST CATCH BASIN UNITS REQUIRED FOR THE PROJECT UNTIL A LIST OF SIZES IS FURNISHED BY THE ENGINEER.

DETAILED DRAWINGS FOR PROPOSED ALTERNATE DESIGNS FOR UNDERGROUND DRAINAGE STRUCTURES SHALL BE SUBMITTED TO THE ENGINEER FOR APPROVAL PROVIDING THAT SUCH ALTERNATE DESIGNS MAKE PROVISION FOR EQUIVALENT CAPACITY AND STRENGTH.

ALL DRAINAGE STRUCTURES ARE DESIGNATED ON THE PLANS AS "MANHOLES 3X3-L", "CATCH BASINS 4-B", "INLETS 2X3-H", ETC. THE FIRST NUMBERS DESIGNATE THE SIZE OF THE STRUCTURE, AND THE FOLLOWING LETTER DESIGNATES THE TYPE OF COVER TO BE USED TO COMPRISE THE COMPLETE UNIT.

BASES SHALL BE PLACED ON A BED OF MATERIAL AT LEAST 6 INCHES IN DEPTH, WHICH MEETS THE REQUIREMENTS OF GRANULAR BACKFILL. THIS BEDDING SHALL BE COMPACTED AND PROVIDE UNIFORM SUPPORT FOR THE ENTIRE AREA OF THE BASE.

PRECAST REINFORCED CONCRETE CONE TOPS (ECCENTRIC OR CONCENTRIC) OR PRECAST REINFORCED CONCRETE FLAT SLAB TOPS MAY BE USED ON CONCRETE BLOCK STRUCTURES. THE TOPS SHALL BE INSTALLED ON A BED OF MORTAR.

ECCENTRIC CONE TOPS MAY BE USED ON ALL STRUCTURES, AND CONCENTRIC CONE TOPS SHALL BE USED ONLY ON STRUCTURES 5 FEET OR LESS IN DEPTH, UNLESS OTHERWISE DIRECTED BY THE ENGINEER.

STEPS MEETING AASHTO M199 AND THE FOLLOWING REQUIREMENTS SHALL BE INSTALLED IN ALL STRUCTURES OVER 5 FEET IN DEPTH: 16 INCH C-C MAXIMUM SPACING; PROJECT A MINIMUM CLEAR DISTANCE OF 4 INCHES FROM THE WALL AT THE POINT OF EMBEDMENT; MINIMUM LENGTH OF 10 INCHES; MINIMUM WALL EMBEDMENT OF 3 INCHES. FERROUS METAL STEPS NOT PAINTED OR TREATED TO RESIST CORROSION SHALL HAVE A MINIMUM CROSS SECTIONAL DIMENSION OF 1 INCH.

STEPS OF APPROVED POLYPROPYLENE PLASTIC COATED REINFORCEMENT BAR ARE ACCEPTABLE. REINFORCING BAR MUST BE A MINIMUM OF ½ INCH AND MEET THE REQUIREMENTS OF ASTM A615.

CERTIFICATION SHALL BE PROVIDED THAT INSTALLED STEPS WHEN TESTED IN ACCORDANCE WITH SECTION 10 OF AASHTO T280 CAN WITHSTAND A VERTICAL LOAD OF 800 LBS. AND A HORIZONTAL LOAD OF 400 LBS.

ALL BAR STEEL REINFORCEMENT SHALL BE EMBEDDED 2 INCHES CLEAR UNLESS OTHERWISE SHOWN OR NOTED.

ALL PRECAST INLET UNITS SHALL CONFORM TO THE PERTINENT REQUIREMENTS OF AASHTO DESIGNATION M199.

PRECAST REINFORCED RISERS SHALL HAVE A TONGUE AND GROOVE JOINT WITH TONGUE UP OR DOWN.

CONCRETE BLOCK WILL NOT BE PERMITED FOR STRUCTURES GREATER THAN 4 FEET IN DIAMETER.

4" OVERHANGING BASES ARE REQUIRED FOR ALL CONCRETE BLOCK INSTALLATIONS. 4" OVERHANG IS REQUIRED WHEN SEPERATE PRECAST BASE IS PROVIDED. OVERHANG IS NOT REQUIRED ON PRECAST STRUCTURES WITH AN INTEGRAL OR MONOLITHIC BASE.

FOR ADDITIONAL CONFIGURATIONS, MAINTAIN A MINIMUM OF 12 INCHES AS MEASURED FROM THE INSIDE OF THE STRUCTURE WALL BETWEEN THE OUTSIDE PIPE WALLS OF ADJACENT PIPES. SEE DETAIL "C".

① MINIMUM WALL THICKNESS SHALL BE 4 INCHES FOR 3-FT, 5 INCHES FOR 4-FT, 6 INCHES FOR 5-FT AND 7 INCHES FOR 6-FT DIAMETER PRECAST CATCH BASINS.

② FOR PRECAST CATCH BASINS PROVIDE REINFORCING STEEL IN ACCORDANCE TO AASHTO M199.

③ PRECAST FLAT SLAB TOPS AND BASES WITH A DIAMETER OF 48" AND LESS SHALL HAVE A MINIMUM THICKNESS OF 6". PRECAST FLAT SLAB TOPS AND BASES WITH A DIAMETER LARGER THAN 48" SHALL HAVE A MINIMUM THICKNESS OF 8".

④ 1" CONCRETE KEY POURED AFTER INSTALLATION. 2' SUMP MEASURED FROM TOP OF KEY.

CATCH BASIN COVER OPENING MATRIX

CATCH BASIN SIZE	INLET COVER TYPE	ALL A'S	ALL B'S	BW	C	F	ALL H'S	S	T	V	WM	Z
	OPENING SIZE (FT)											
3-FT	2X2	X	X					X		X		
	2 DIA.				X							X
4-FT-6-FT	2X2	X	X					X		X		
	2X2.5			X				X	X	X	X	
	2 DIA.				X							X
	2X3						X					
	2.5X3					X						

PIPE MATRIX

CATCH BASIN SIZE	MAXIMUM INSIDE PIPE DIAMETER FOR TWO PIPES	
	180° SEPARATION (IN)	90° SEPARATION (IN)
3-FT	15	12
4-FT	24	18
5-FT	36	24
6-FT	42	30

CATCH BASINS 3-FT, 4-FT, 5-FT AND 6-FT DIAMETER

CATCH BASINS 3-FT, 4-FT, 5-FT AND 6-FT DIAMETER

STATE OF WISCONSIN
DEPARTMENT OF TRANSPORTATION

APPROVED
6/5/2012 — DATE
/S/ Jerry H. Zogg — ROADWAY STANDARDS ENGINEER
FHWA

S.D.D. 8 A 8-1

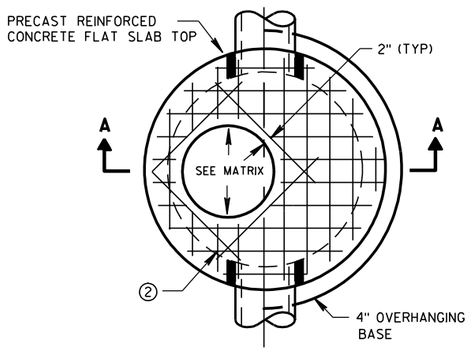

PLAN VIEW CIRCULAR OPENING

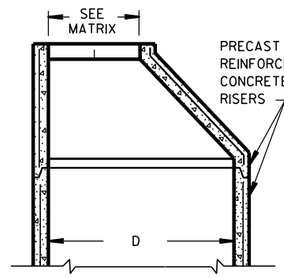

OPTIONAL PRECAST REINFORCED CONCRETE ECCENTRIC TOP

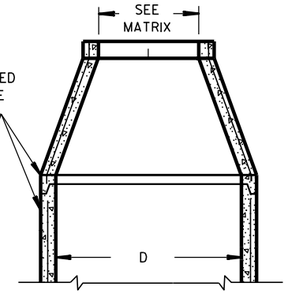

OPTIONAL PRECAST REINFORCED CONCRETE CONCENTRIC TOP

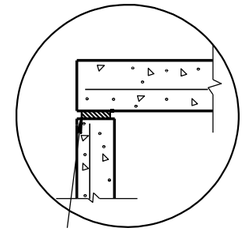

TOP WITH PLAIN END JOINT

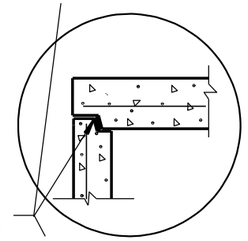

JOINTS TO BE SEALED WITH A BUTYL RUBBER SEAL PER SEALANT MANUFACTURERS RECOMMENDATIONS CONFORMING TO ASTM C990 (TYP)

TOP WITH TONGUE AND GROOVE JOINT

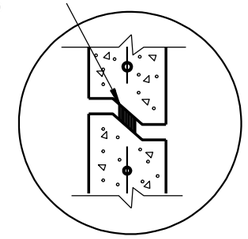

RISER WITH TONGUE AND GROOVE JOINT

DETAIL "B"

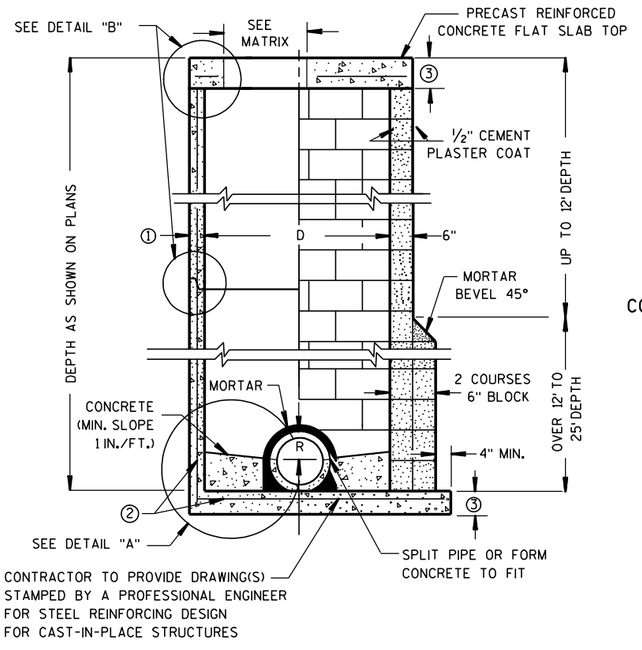

PRECAST REINFORCED CONCRETE WITH MONOLITHIC BASE

CONCRETE BLOCK WITH CAST-IN-PLACE OR PRECAST REINFORCED CONCRETE BASE ②

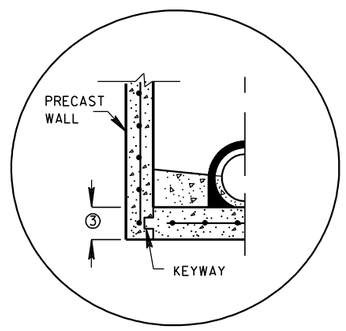

PRECAST REINFORCED CONCRETE WITH INTEGRAL BASE OPTION

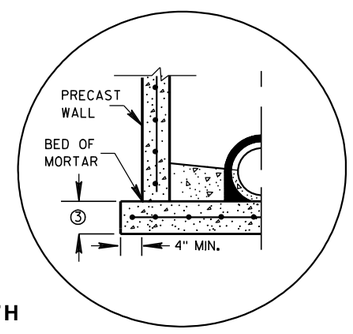

SEPERATE PRECAST REINFORCED CONCRETE BASE OPTION

DETAIL "A"

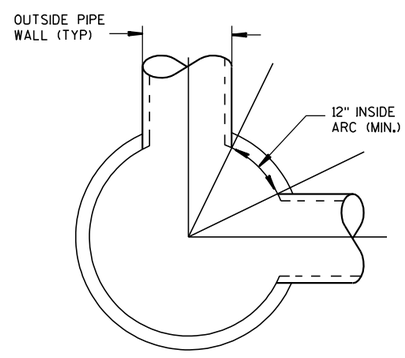

DETAIL "C"

GENERAL NOTES

DETAILS OF CONSTRUCTION, MATERIALS AND WORKMANSHIP NOT SHOWN ON THIS DRAWING SHALL CONFORM TO THE PERTINENT REQUIREMENTS OF THE STANDARD SPECIFICATIONS AND THE APPLICABLE SPECIAL PROVISIONS.

UNLESS OTHERWISE AUTHORIZED IN WRITING BY THE ENGINEER, THE CONTRACTOR SHALL NOT ORDER AND DELIVER PRECAST MANHOLE UNITS REQUIRED FOR THE PROJECT UNTIL A LIST OF SIZES IS FURNISHED BY THE ENGINEER.

DETAILED DRAWINGS FOR PROPOSED ALTERNATE DESIGNS FOR UNDERGROUND DRAINAGE STRUCTURES SHALL BE SUBMITTED TO THE ENGINEER FOR APPROVAL PROVIDING THAT SUCH ALTERNATE DESIGNS MAKE PROVISION FOR EQUIVALENT CAPACITY AND STRENGTH.

ALL DRAINAGE STRUCTURES ARE DESIGNATED ON THE PLANS AS "MANHOLES 3X3-L", "CATCH BASINS 4-B", "INLETS 2X3-H", ETC. THE FIRST NUMBERS DESIGNATE THE SIZE OF THE STRUCTURE, AND THE FOLLOWING LETTER DESIGNATES THE TYPE OF COVER TO BE USED TO COMPRISE THE COMPLETE UNIT.

BASES SHALL BE PLACED ON A BED OF MATERIAL AT LEAST 6 INCHES IN DEPTH, WHICH MEETS THE REQUIREMENTS OF GRANULAR BACKFILL. THIS BEDDING SHALL BE COMPACTED AND PROVIDE UNIFORM SUPPORT FOR THE ENTIRE AREA OF THE BASE.

PRECAST REINFORCED CONE TOPS (ECCENTRIC OR CONCENTRIC) OR PRECAST REINFORCED FLAT SLAB TOPS MAY BE USED ON CONCRETE BLOCK STRUCTURES. THE CONE TOPS SHALL BE INSTALLED ON A BED OF MORTAR.

ECCENTRIC CONE TOPS MAY BE USED ON ALL STRUCTURES, AND CONCENTRIC CONE TOPS SHALL BE USED ONLY ON STRUCTURES 5 FEET OR LESS IN DEPTH, UNLESS OTHERWISE DIRECTED BY THE ENGINEER.

STEPS MEETING AASHTO M199 AND THE FOLLOWING REQUIREMENTS SHALL BE INSTALLED IN ALL STRUCTURES OVER 5 FEET IN DEPTH: 16 INCH C-C MAXIMUM SPACING; PROJECT A MINIMUM CLEAR DISTANCE OF 4 INCHES FROM THE WALL AT THE POINT OF EMBEDMENT; MINIMUM LENGTH OF 10 INCHES; MINIMUM WALL EMBEDMENT OF 3 INCHES. FERROUS METAL STEPS NOT PAINTED OR TREATED TO RESIST CORROSION SHALL HAVE A MINIMUM CROSS SECTIONAL DIMENSION OF 1 INCH.

STEPS OF APPROVED POLYPROPYLENE PLASTIC COATED REINFORCEMENT BAR ARE ACCEPTABLE. REINFORCING BAR MUST BE A MINIMUM OF ½" AND MEET THE REQUIREMENTS OF ASTM A615.

CERTIFICATION SHALL BE PROVIDED THAT INSTALLED STEPS WHEN TESTED IN ACCORDANCE WITH SECTION 10 OF AASHTO T280 CAN WITHSTAND A VERTICAL LOAD OF 800 LBS. AND A HORIZONTAL LOAD OF 400 LBS.

ALL BAR STEEL REINFORCEMENT SHALL BE EMBEDDED 2 INCHES CLEAR UNLESS OTHERWISE SHOWN OR NOTED.

CONCRETE BLOCK WILL NOT BE PERMITED FOR STRUCTURES GREATER THAN 4 FEET IN DIAMETER.

PRECAST REINFORCED RISERS SHALL HAVE A TONGUE AND GROOVE JOINT WITH TONGUE UP OR DOWN.

ALL PRECAST MANHOLE UNITS SHALL CONFORM TO THE PERTINENT REQUIREMENTS OF AASHTO DESIGNATION M 199.

4" OVERHANGING BASES ARE REQUIRED FOR ALL CONCRETE BLOCK INSTALLATIONS. 4" OVERHANG IS REQUIRED WHEN SEPERATE PRECAST BASE IS PROVIDED. OVERHANG IS NOT REQUIRED ON PRECAST STRUCTURES WITH AN INTEGRAL OR MONOLITHIC BASE.

FOR ADDITIONAL CONFIGURATIONS, MAINTAIN A MINIMUM OF 12 INCHES AS MEASURED FROM THE INSIDE OF THE STRUCTURE WALL BETWEEN THE OUTSIDE PIPE WALLS OF ADJACENT PIPES. SEE DETAIL "C".

① MINIMUM WALL THICKNESS SHALL BE 4 INCHES FOR 3-FT, 5 INCHES FOR 4-FT, 6 INCHES FOR 5-FT, 7 INCHES FOR 6-FT, 8 INCHES FOR 7-FT AND 9 INCHES FOR 8-FT DIAMETER PRECAST MANHOLES.

② FOR PRECAST MANHOLES PROVIDE REINFORCING STEEL IN ACCORDANCE TO AASHTO M199.

③ PRECAST FLAT SLAB TOPS AND BASES WITH A DIAMETER OF 48" AND LESS SHALL HAVE A MINIMUM THICKNESS OF 6". PRECAST FLAT SLAB TOPS AND BASES WITH A DIAMETER LARGER THAN 48" SHALL HAVE A MINIMUM THICKNESS OF 8".

MANHOLE COVER OPENING MATRIX

MANHOLE COVER TYPE	C	ALL J'S	K	L	M
OPENING SIZE (FT)					
2 DIA.	X	X		X	
3 DIA.			X		X

PIPE MATRIX

MANHOLE SIZE	MAXIMUM INSIDE PIPE DIAMETER FOR TWO PIPES	
	180° SEPARATION (IN)	90° SEPARATION (IN)
3-FT	15	12
4-FT	24	18
5-FT	36	24
6-FT	42	36
7-FT	48	36
8-FT	60	42

MANHOLES 3-FT, 4-FT, 5-FT, 6-FT, 7-FT AND 8-FT DIAMETER

STATE OF WISCONSIN
DEPARTMENT OF TRANSPORTATION

APPROVED
6/5/2012 — DATE
/S/ Jerry H. Zogg — ROADWAY STANDARDS DEVELOPMENT ENGINEER
FHWA

MANHOLES 3-FT, 4-FT, 5-FT, 6-FT, 7-FT AND 8-FT DIAMETER

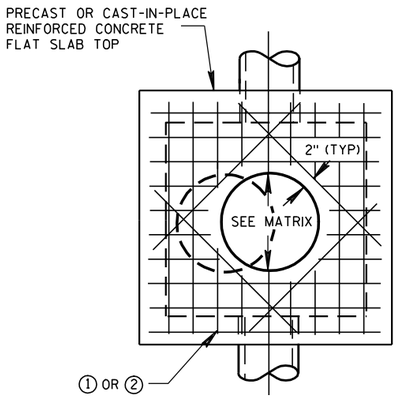

PLAN VIEW CIRCULAR OPENING

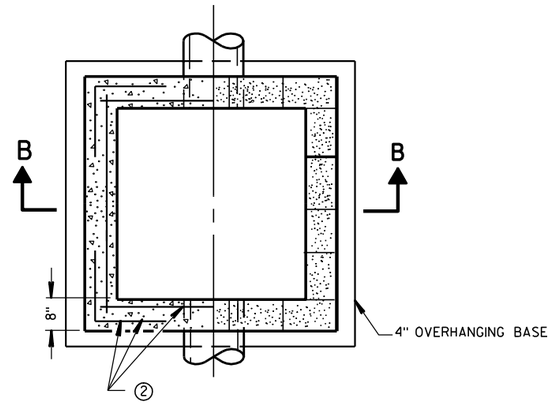

SECTION A-A PLAN VIEW

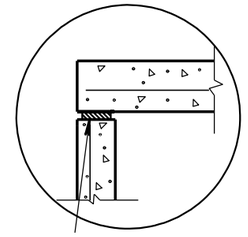

TOP WITH PLAIN END JOINT

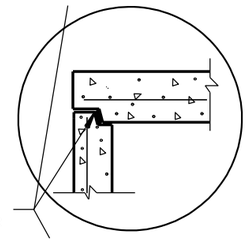

TOP WITH TONGUE AND GROOVE JOINT

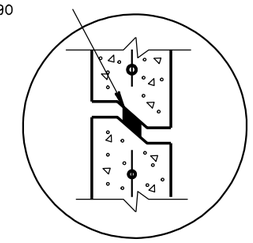

RISER WITH TONGUE AND GROOVE JOINT

DETAIL "B"

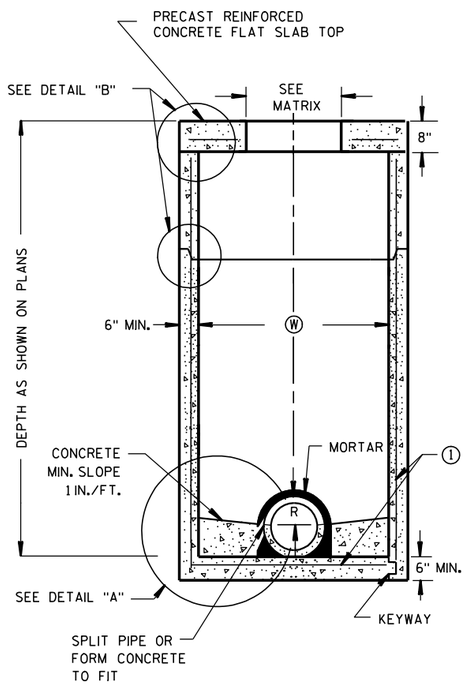

PRECAST REINFORCED CONCRETE WITH MONOLITHIC BASE

PRECAST REINFORCED CONCRETE WITH INTEGRAL BASE

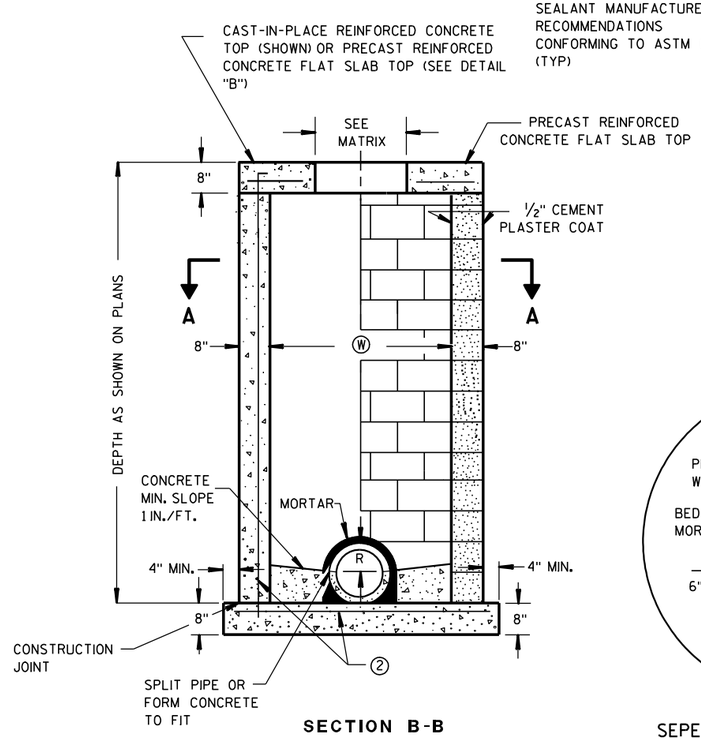

SECTION B-B

CAST-IN-PLACE REINFORCED CONCRETE

CONCRETE BLOCK WITH CAST-IN-PLACE OR PRECAST REINFORCED CONCRETE BASE

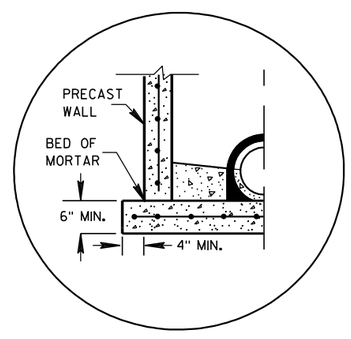

SEPERATE PRECAST REINFORCED CONCRETE BASE OPTION

DETAIL "A"

GENERAL NOTES

DETAILS OF CONSTRUCTION, MATERIALS AND WORKMANSHIP NOT SHOWN ON THIS DRAWING SHALL CONFORM TO THE PERTINENT REQUIREMENTS OF THE STANDARD SPECIFICATIONS AND THE APPLICABLE SPECIAL PROVISIONS.

UNLESS OTHERWISE AUTHORIZED IN WRITING BY THE ENGINEER, THE CONTRACTOR SHALL NOT ORDER AND DELIVER PRECAST MANHOLE UNITS REQUIRED FOR THE PROJECT UNTIL A LIST OF SIZES IS FURNISHED BY THE ENGINEER.

DETAILED DRAWINGS FOR PROPOSED ALTERNATE DESIGNS FOR UNDERGROUND DRAINAGE STRUCTURES SHALL BE SUBMITTED TO THE ENGINEER FOR APPROVAL PROVIDING THAT SUCH ALTERNATE DESIGNS MAKE PROVISION FOR EQUIVALENT CAPACITY AND STRENGTH.

ALL DRAINAGE STRUCTURES ARE DESIGNATED ON THE PLANS AS "MANHOLES 3X3-L", "CATCH BASINS 4-B", "INLETS 2X3-H", ETC. THE FIRST NUMBERS DESIGNATE THE SIZE OF THE STRUCTURE, AND THE FOLLOWING LETTER DESIGNATES THE TYPE OF COVER TO BE USED TO COMPRISE THE COMPLETE UNIT.

BASES SHALL BE PLACED ON A BED OF MATERIAL AT LEAST 6 INCHES IN DEPTH, WHICH MEETS THE REQUIREMENTS OF GRANULAR BACKFILL. THIS BEDDING SHALL BE COMPACTED AND PROVIDE UNIFORM SUPPORT FOR THE ENTIRE AREA OF THE BASE.

PRECAST REINFORCED FLAT SLAB TOPS MAY BE USED ON CONCRETE BLOCK STRUCTURES. THE TOPS SHALL BE INSTALLED ON A BED OF MORTAR.

STEPS MEETING AASHTO M199 AND THE FOLLOWING REQUIREMENTS SHALL BE INSTALLED IN ALL STRUCTURES OVER 5 FEET IN DEPTH: 16 INCH C-C MAXIMUM SPACING; PROJECT A MINIMUM CLEAR DISTANCE OF 4 INCHES FROM THE WALL AT THE POINT OF EMBEDMENT; MINIMUM LENGTH OF 10 INCHES; MINIMUM WALL EMBEDMENT OF 3 INCHES. FERROUS METAL STEPS NOT PAINTED OR TREATED TO RESIST CORROSION SHALL HAVE A MINIMUM CROSS SECTIONAL DIMENSION OF 1 INCH.

STEPS OF APPROVED POLYPROPYLENE PLASTIC COATED REINFORCEMENT BAR ARE ACCEPTABLE. REINFORCING BAR MUST BE A MINIMUM OF ½ INCH AND MEET THE REQUIREMENTS OF ASTM A615.

CERTIFICATION SHALL BE PROVIDED THAT INSTALLED STEPS WHEN TESTED IN ACCORDANCE WITH SECTION 10 OF AASHTO T280 CAN WITHSTAND A VERTICAL LOAD OF 800 LBS. AND A HORIZONTAL LOAD OF 400 LBS.

ALL BAR STEEL REINFORCEMENT SHALL BE EMBEDDED 2 INCHES CLEAR UNLESS OTHERWISE SHOWN OR NOTED.

CONCRETE BLOCK WILL NOT BE PERMITED FOR STRUCTURES GREATER THAN 4 FEET IN WIDTH.

PRECAST REINFORCED RISERS SHALL HAVE A TONGUE AND GROOVE JOINT WITH TONGUE UP OR DOWN.

ALL PRECAST MANHOLE UNITS SHALL CONFORM TO THE PERTINENT REQUIREMENTS OF ASTM C 913.

4" OVERHANGING BASES ARE REQUIRED FOR ALL CONCRETE BLOCK INSTALLATIONS. 4" OVERHANG IS REQUIRED WHEN SEPERATE PRECAST BASE IS PROVIDED. OVERHANG IS NOT REQUIRED ON PRECAST STRUCTURES WITH AN INTEGRAL OR MONOLITHIC BASE.

MAXIMUM PIPE DIAMETER DETERMINED BY 3 INCH CLEARANCE ON EACH SIDE OF THE OUTSIDE WALL OF THE PIPE. SEE DETAIL "C". ASSUMES PIPE ENTERS PERPENDICULAR TO THE STRUCTURE.

① FOR PRECAST MANHOLES PROVIDE REINFORCING STEEL IN ACCORDANCE TO ASTM C 913.

② CONTRACTOR TO PROVIDE DRAWING(S) STAMPED BY A PROFESSIONAL ENGINEER FOR STEEL REINFORCING DESIGN FOR CAST-IN-PLACE STRUCTURES.

MANHOLE COVER OPENING MATRIX

MANHOLE COVER TYPE	C	ALL J'S	K	L	M
OPENING SIZE (FT)					
2 DIA.	X	X		X	
3 DIA.			X		X

PIPE MATRIX

MANHOLE SIZE	MAXIMUM INSIDE PIPE DIAMETER	
	WIDTH Ⓦ (IN)	LENGTH Ⓛ (IN)
3X3-FT	24	24
4X4-FT	30	30
5X5-FT	42	42
6X6-FT	54	54

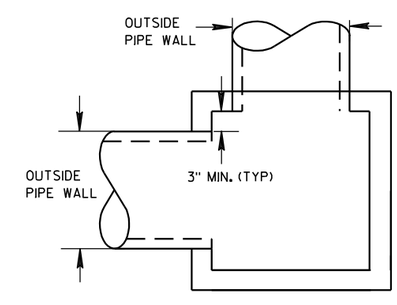

DETAIL "C"

SQUARE MANHOLES W/ FLAT TOP

MANHOLES 3X3-FT, 4X4-FT, 5X5-FT AND 6X6-FT

MANHOLES 3X3-FT, 4X4-FT 5X5-FT AND 6X6-FT

STATE OF WISCONSIN DEPARTMENT OF TRANSPORTATION

APPROVED
6/5/2012 — DATE
/S/ Jerry H. Zaas — ROADWAY STANDARDS DEVELOPMENT ENGINEER
FHWA

6

S.D.D. 8 B 10-1

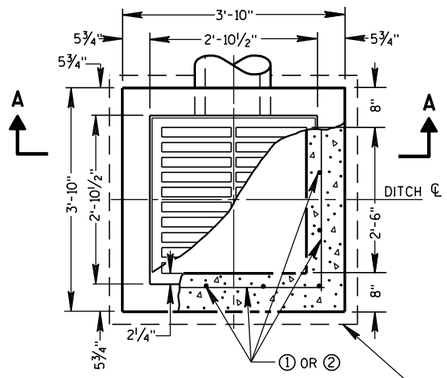

PLAN VIEW

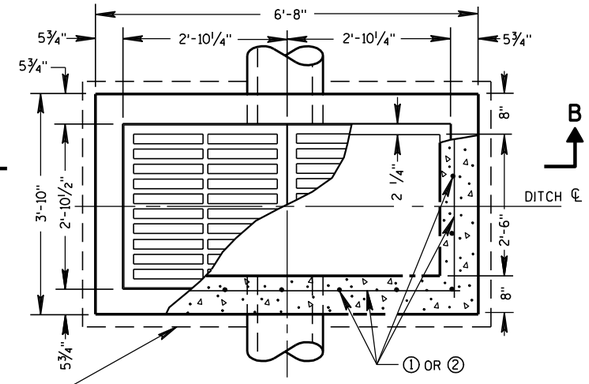

PLAN VIEW

4" OVERHANGING BASE ON REINFORCED CAST-IN-PLACE CONCRETE INLETS

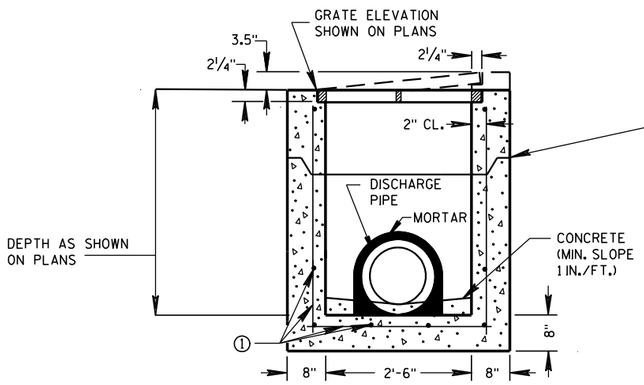

PRECAST REINFORCED CONCRETE SECTION A-A

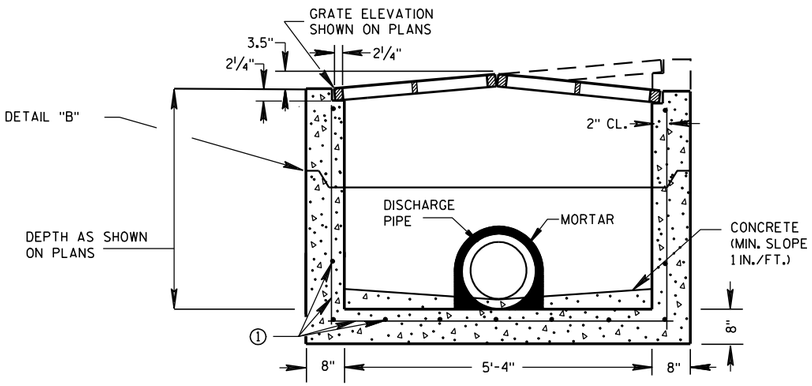

PRECAST REINFORCED CONCRETE SECTION B-B

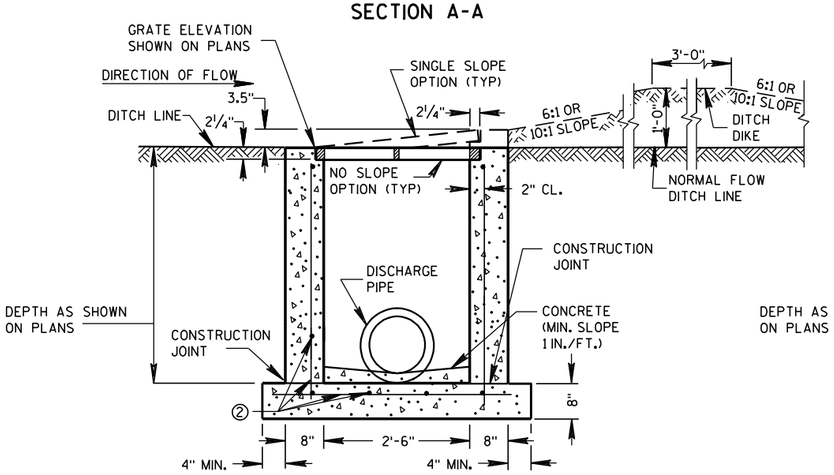

REINFORCED CAST-IN-PLACE CONCRETE SECTION A-A

INLETS MEDIAN 1 GRATE

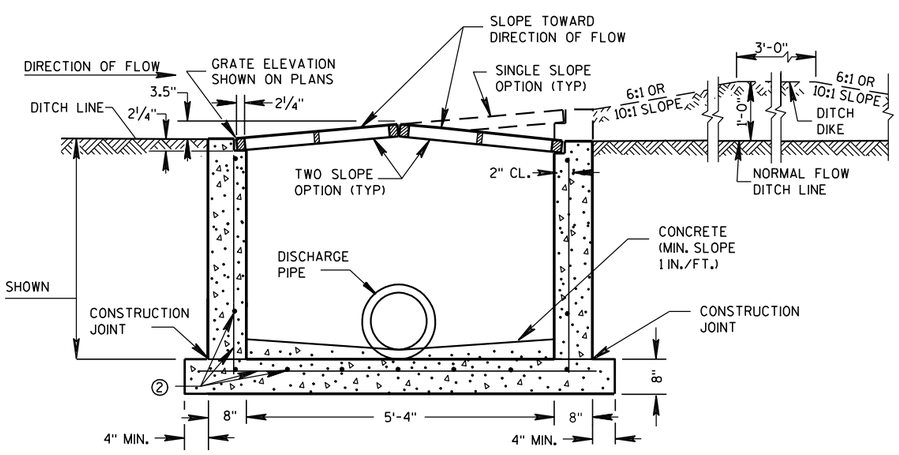

REINFORCED CAST-IN-PLACE CONCRETE SECTION B-B

INLETS MEDIAN 2 GRATE

GENERAL NOTES

DETAILS OF CONSTRUCTION, MATERIALS AND WORKMANSHIP NOT SHOWN ON THIS DRAWING SHALL CONFORM TO THE PERTINENT REQUIREMENTS OF THE STANDARD SPECIFICATIONS AND THE APPLICABLE SPECIAL PROVISIONS.

UNLESS OTHERWISE AUTHORIZED IN WRITING BY THE ENGINEER, THE CONTRACTOR SHALL NOT ORDER AND DELIVER PRECAST INLET UNITS REQUIRED FOR THE PROJECT UNTIL A LIST OF SIZES IS FURNISHED BY THE ENGINEER.

DETAILED DRAWINGS FOR PROPOSED ALTERNATE DESIGNS FOR INLETS WHICH MAY INCLUDE PRECAST REINFORCED CONCRETE INLETS, SHALL BE SUBMITTED TO THE ENGINEER FOR APPROVAL PROVIDING THAT SUCH ALTERNATE DESIGNS MAKE PROVISION FOR EQUIVALENT CAPACITY AND STRENGTH.

ALL MEDIAN INLETS ARE DESIGNATED ON THE PLANS AS "INLETS, 1G-MS", ETC. THE FIRST NUMBER AND LETTER DESIGNATE THE TYPE OF STRUCTURE, AND THE FOLLOWING LETTERS DESIGNATE THE TYPE OF COVER TO BE USED TO COMPRISE THE COMPLETE UNIT.

ALL BAR STEEL REINFORCEMENT SHALL BE EMBEDDED 2 INCHES CLEAR UNLESS OTHERWISE SHOWN OR NOTED.

PRECAST REINFORCED RISERS SHALL HAVE A TONGUE AND GROOVE JOINT WITH TONGUE UP OR DOWN.

ALL PRECAST INLET UNITS SHALL CONFORM TO THE PERTINENT REQUIREMENTS OF ASTM C 913.

MAXIMUM INSIDE PIPE DIAMETER DETERMINED BY 3" CLEARANCE ON EACH SIDE OF THE OUTSIDE WALL OF THE PIPE. SEE DETAIL "A". ASSUMES PIPE ENTERS PERPENDICULAR TO THE STRUCTURE.

① FOR PRECAST INLETS PROVIDE REINFORCING STEEL IN ACCORDANCE TO ASTM C 913.

② CONTRACTOR TO PROVIDE DRAWING(S) STAMPED BY A PROFESSIONAL ENGINEER FOR STEEL REINFORCING DESIGN FOR CAST-IN-PLACE STRUCTURES.

PIPE MATRIX

	MAXIMUM INSIDE PIPE DIAMETER	
INLET SIZE	WIDTH (IN)	LENGTH (IN)
1 GRATE	18	18
2 GRATE	18	42

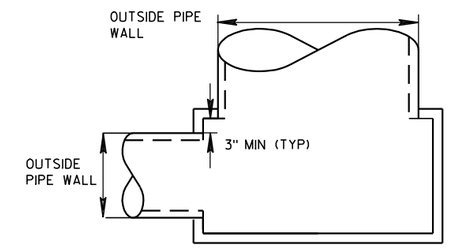

DETAIL "A"

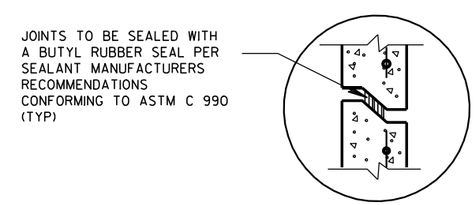

DETAIL "B"

INLETS MEDIAN 1 AND 2 GRATE

STATE OF WISCONSIN
DEPARTMENT OF TRANSPORTATION

APPROVED
6/5/2012 — DATE
/S/ Jerry H. Zogg — ROADWAY STANDARDS DEVELOPMENT ENGINEER
FHWA

6

S.D.D. 8 C 8-1

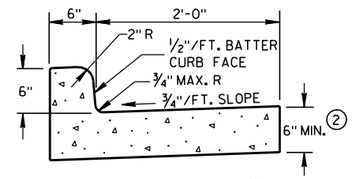

TYPES A & D ①

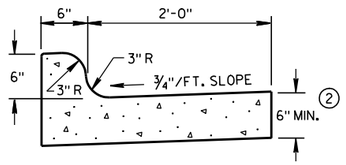

TYPES K & L ①

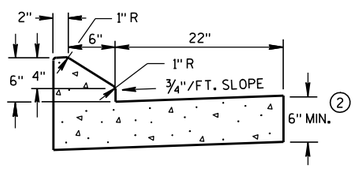

6" SLOPED CURB TYPES G & J ①

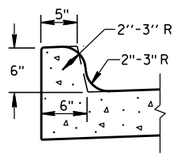

OPTIONAL CURB SHAPE FOR TYPES K & L ①

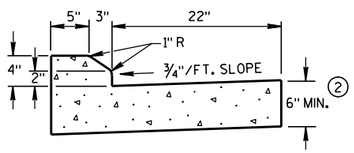

4" SLOPED CURB TYPES G & J ①

CONCRETE CURB & GUTTER 30"

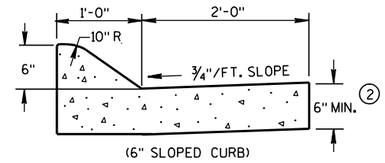

(6" SLOPED CURB)

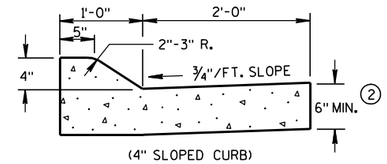

(4" SLOPED CURB)

TYPES A & D ①

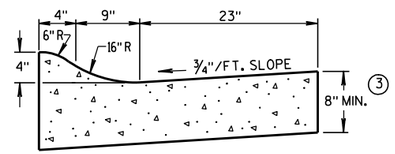

4" SLOPED CURB TYPES R & T ① ④

CONCRETE CURB & GUTTER 36"

GENERAL NOTES

DETAILS OF CONSTRUCTION, MATERIALS AND WORKMANSHIP NOT SHOWN ON THIS DRAWING SHALL CONFORM TO THE PERTINENT REQUIREMENTS OF THE CONTRACT.

PAVEMENT TIES AND TIE BARS SHALL BE EPOXY COATED IN CONFORMANCE WITH SUBSECTION 505.2.6.2 OF THE STANDARD SPECIFICATIONS.

INTEGRAL CURB & GUTTER SHALL CONFORM TO THE DETAILS SHOWN FOR CONCRETE CURB & GUTTER INCLUDING THE TRANSVERSE GUTTER SLOPE. A LONGITUDINAL CONSTRUCTION JOINT IS NOT REQUIRED WITH INTEGRAL CURB AND GUTTER.

WHERE THE TRANSVERSE JOINTS IN THE PAVEMENT ARE REQUIRED TO BE SEALED, THE JOINTS IN THE INTEGRAL CURB AND GUTTER SHALL BE SEALED TO THE FACE OF CURB WITH THE SAME TYPE OF SEALANT. THE COST OF FURNISHING AND INSTALLING THIS SEALANT SHALL BE INCIDENTAL TO THE ITEM CONCRETE CURB AND GUTTER.

UNLESS OTHERWISE SHOWN ON THE TYPICAL CROSS SECTIONS, THE BASE AGGREGATE AND COMMON EXCAVATION LIMITS ARE 2'-0" BEHIND THE BACK OF CURBS.

① TIE BARS ARE REQUIRED FOR CURB AND GUTTER TYPES A, G, K AND R.

② THE BOTTOM OF CURB AND GUTTER MAY BE CONSTRUCTED EITHER LEVEL OR PARALLEL TO THE SLOPE OF THE SUBGRADE OR BASE AGGREGATE PROVIDED A 6" MINIMUM GUTTER THICKNESS IS MAINTAINED.

③ THE BOTTOM OF CURB AND GUTTER MAY BE CONSTRUCTED EITHER LEVEL OR PARALLEL TO THE SLOPE OF THE SUBGRADE OR BASE AGGREGATE PROVIDED A 8" MINIMUM GUTTER THICKNESS IS MAINTAINED.

④ THE FACE OF CURB IS 6" FROM THE BACK OF CURB.

⑤ WHEN REVERSE SLOPE GUTTER IS REQUIRED, THE LOCATION(S) WILL BE SHOWN ELSEWHERE IN THE PLAN.

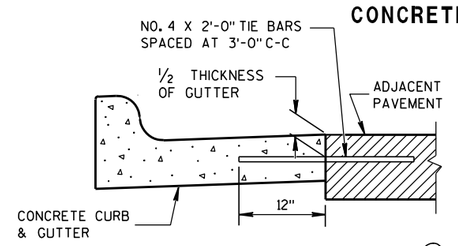

TYPICAL TIE BAR LOCATION ①

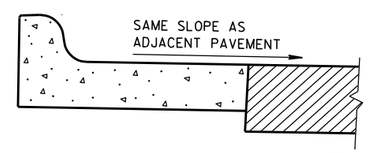

REVERSE SLOPE GUTTER ⑤
(TYPICAL FOR ALL CURB & GUTTER TYPES)

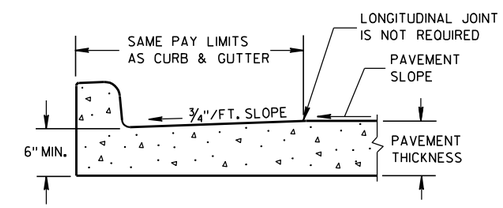

PARTIAL SECTION OF PAVEMENT WITH INTEGRAL CURB & GUTTER

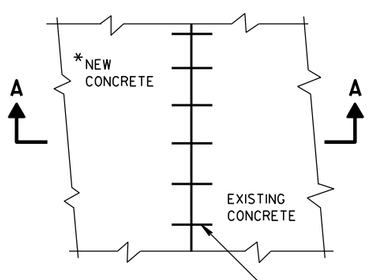

*NEW CURB & GUTTER, SURFACE DRAINS, CONCRETE PAVEMENT OR OTHER NEW CONCRETE.

PLAN VIEW

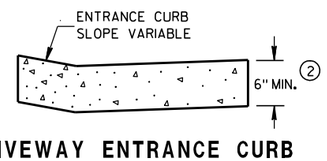

DRIVEWAY ENTRANCE CURB
(WHEN DIRECTED BY THE ENGINEER)

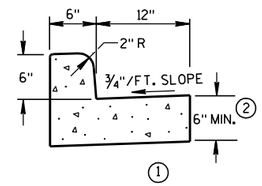

① TYPES A & D

CONCRETE CURB & GUTTER 18"

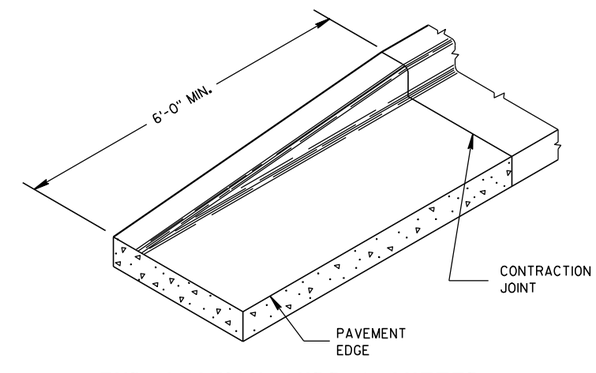

END SECTION CURB & GUTTER

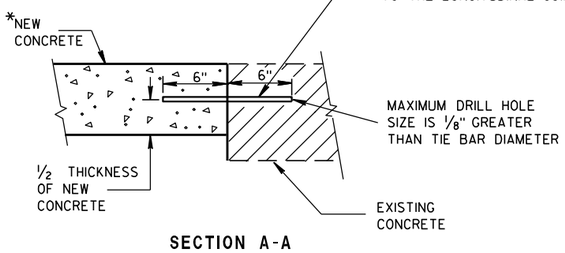

SECTION A-A

TIE BARS DRILLED INTO EXISTING PAVEMENT

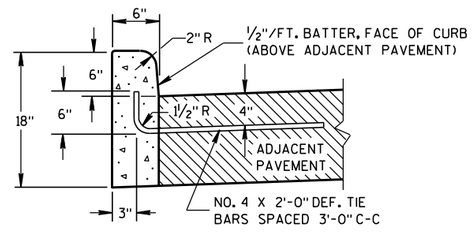

① TYPES A & D

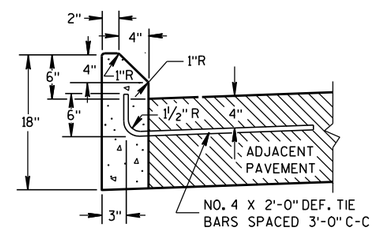

① TYPES G & J

CONCRETE CURB

CONCRETE CURB, CONCRETE CURB & GUTTER AND TIES

STATE OF WISCONSIN
DEPARTMENT OF TRANSPORTATION

APPROVED
9/4/08 — DATE
/S/ Jerry H. [illegible] — ROADWAY STANDARDS ENGINEER
FHWA

6

S.D.D. 8 D 1-17

GENERAL NOTES

DETAILS OF CONSTRUCTION, MATERIALS AND WORKMANSHIP NOT SHOWN ON THIS DRAWING SHALL CONFORM TO PERTINENT REQUIREMENTS OF THE STANDARD SPECIFICATIONS AND APPLICABLE SPECIAL PROVISIONS.

WELDED STEEL WIRE FABRIC SHALL BE IN ACCORDANCE WITH AASHTO SPECIFICATION M55.

① JOINTS SHALL BE 1/8 TO 1/4 INCH WIDE BY 1 1/2 INCHES DEEP AND SPACED AT UNIFORM INTERVALS OF APPROXIMATELY 4 FEET.

② GEOTEXTILE FABRIC TYPE "R" SHALL UNDERLAY THE FULL LENGTH AND WIDTH OF THE CONCRETE SURFACE DRAIN AND RIPRAP.

③ CONCRETE SURFACE DRAIN WITHOUT CURB AND GUTTER MAY BE USED ON BACKSLOPES WHEN SPECIFIED

ASPHALTIC FLUME

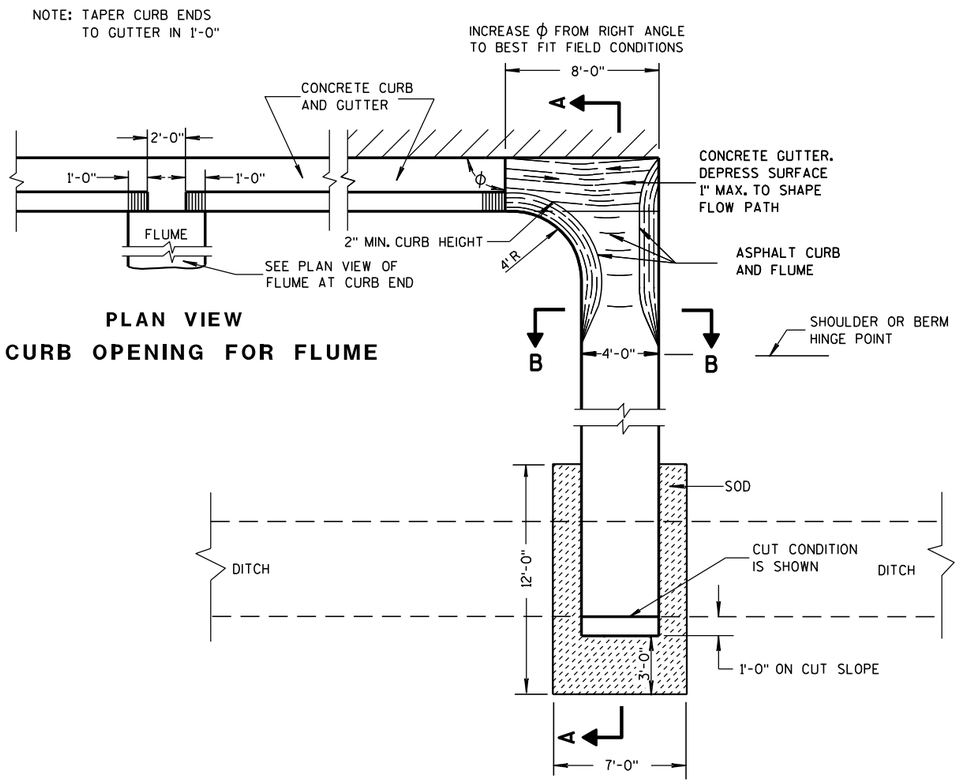

PLAN VIEW
CURB OPENING FOR FLUME

PLAN VIEW
FLUME AT CURB END

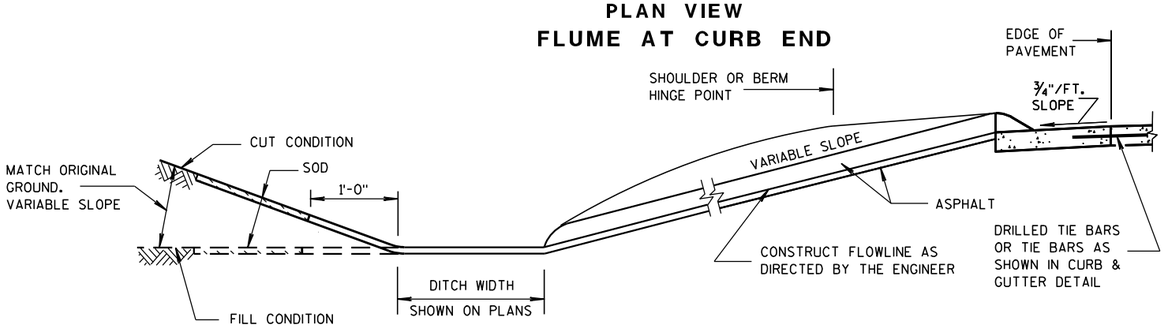

SECTION A-A

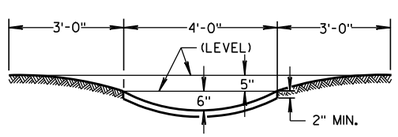

SECTION B-B

③ CONCRETE SURFACE DRAIN

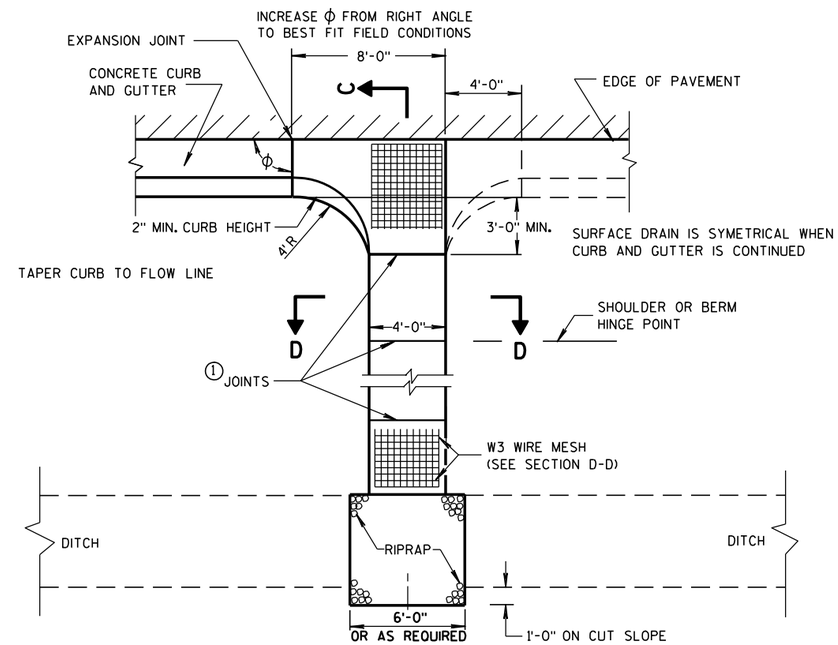

PLAN VIEW

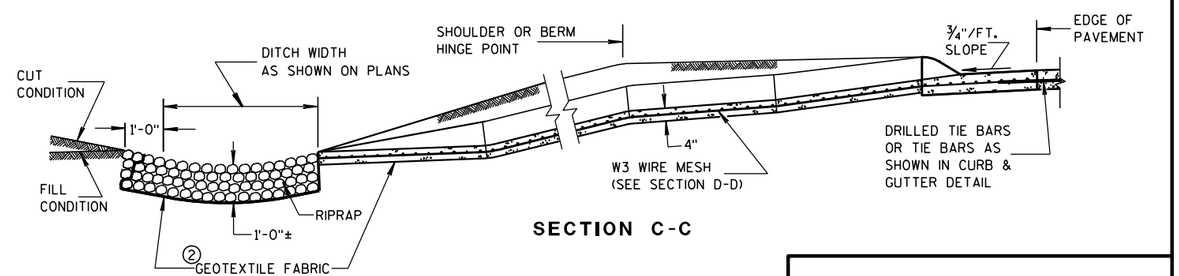

SECTION C-C

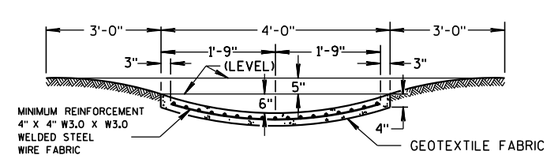

SECTION D-D

CONCRETE SURFACE DRAINS & ASPHALTIC FLUMES

STATE OF WISCONSIN
DEPARTMENT OF TRANSPORTATION

APPROVED
9-4-08 /S/ Jerry H. Zogg
DATE ROADWAY STANDARDS ENGINEER MENT
FHWA

6

S.D.D. 8 D 4-5

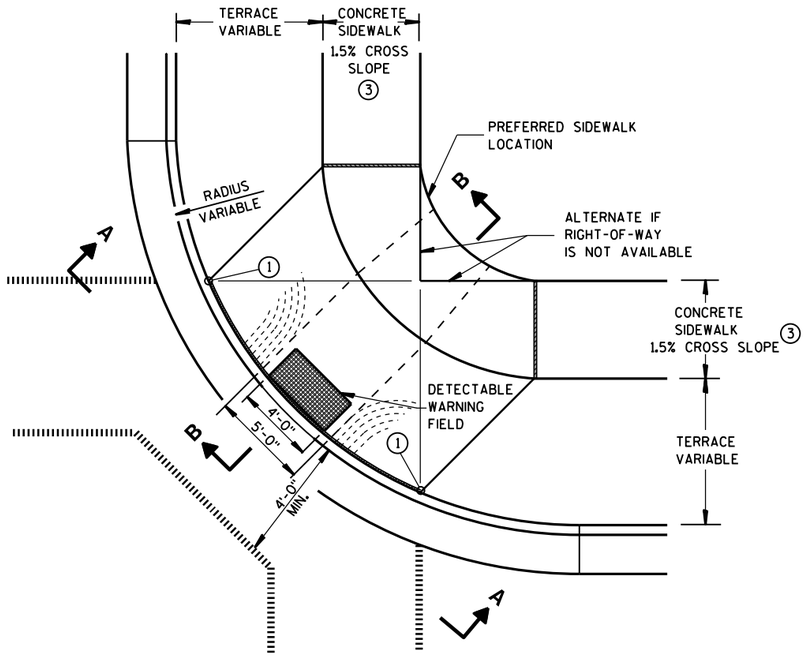

PLAN VIEW

TYPE 1 RAMP

(CENTER OF CORNER RADIUS)

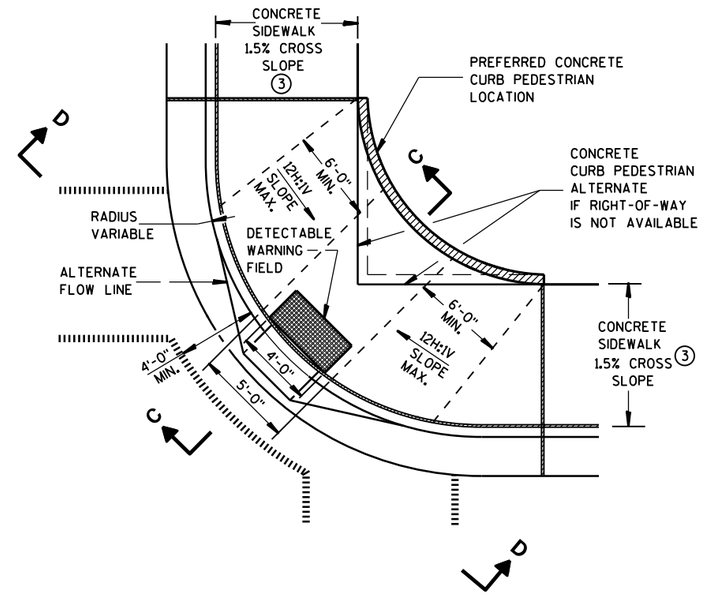

PLAN VIEW

TYPE 1-A RAMP

(NO TERRACE)

GENERAL NOTES

DETAILS OF CONSTRUCTION, MATERIALS AND WORKMANSHIP NOT SHOWN ON THIS DRAWING SHALL CONFORM TO THE PERTINENT REQUIREMENTS OF THE STANDARD SPECIFICATIONS AND THE APPLICABLE SPECIAL PROVISIONS.

RAMPS SHALL BE BUILT AT 12H:1V OR FLATTER. WHEN NECESSARY, THE SIDEWALK ELEVATION MAY BE LOWERED TO MEET THE HIGH POINT ON THE RAMP.

TYPE 1 RAMPS SHALL HAVE A NORMAL SIDEWALK APRON AND CURB ON BOTH SIDES OF RAMP.

DETECTABLE WARNING FIELD SHALL BE MEASURED AND PAID BY THE SQUARE FOOT AS "CURB RAMP DETECTABLE WARNING FIELD". THE CONCRETE PEDESTRIAN CURB, IF NEEDED, SHALL BE MEASURED AND PAID BY THE LINEAL FOOT AS "CONCRETE CURB PEDESTRIAN". CONCRETE SIDEWALK IN THE CURB RAMP AREA SHALL BE MEASURED AND PAID BY THE SQUARE FOOT AS CONCRETE SIDEWALK, INCLUDING THE AREA UNDER THE DETECTABLE WARNING FIELD.

SELECT CURB RAMP DETECTABLE WARNING FIELD MATERIALS AND DEVICES FROM THE DEPARTMENT'S APPROVED MATERIALS LIST. THE COLOR OF THE DETECTABLE WARNING FIELD IS SPECIFIED ELSEWHERE AND IS INCIDENTAL TO THE BID ITEM OF "CURB RAMP DETECTABLE WARNING FIELD".

DETECTABLE WARNING FIELDS THAT ARE INSTALLED AS A GROUP OR SIDE BY SIDE, SHALL BE FROM THE SAME MANUFACTURER.

SURFACE TEXTURE OF THE RAMP SHALL BE OBTAINED BY COARSE BROOMING TRANSVERSE TO THE SLOPE OF THE RAMP.

(1) THIS POINT IS AN EXTENSION OF OUTSIDE EDGE OF APPROACHING SIDEWALK WHERE IT MEETS THE BACK OF CONCRETE CURB.

(2) GRADE CHANGE BETWEEN GUTTER FLAG SLOPE AND THE CURB RAMP SLOPE SHALL NOT EXCEED 11%. PROVIDE DRAINAGE AWAY FROM CURB RAMP AT GUTTER FLAG INTERFACE.

(3) ±0.5% CONSTRUCTION TOLERANCE IN SIDEWALK CROSS SLOPE. THE SIDEWALK CROSS SLOPE SHALL NOT EXCEED 2% WITHOUT PRIOR APPROVAL FROM THE ENGINEER.

LEGEND

- ½" EXPANSION JOINT-SIDEWALK
- CONTRACTION JOINT FIELD LOCATED
- PAVEMENT MARKING CROSSWALK (WHITE)
- ALTERNATIVE LAYOUT

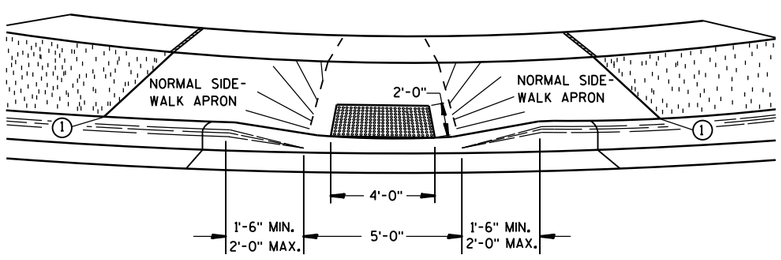

VIEW A-A

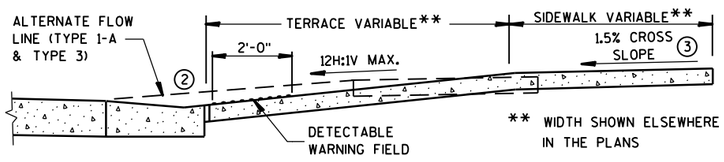

SECTION B-B

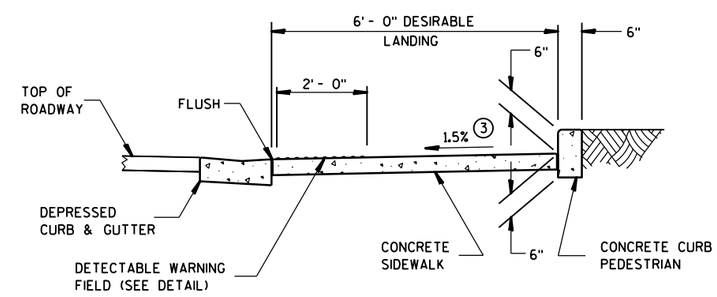

SECTION C-C

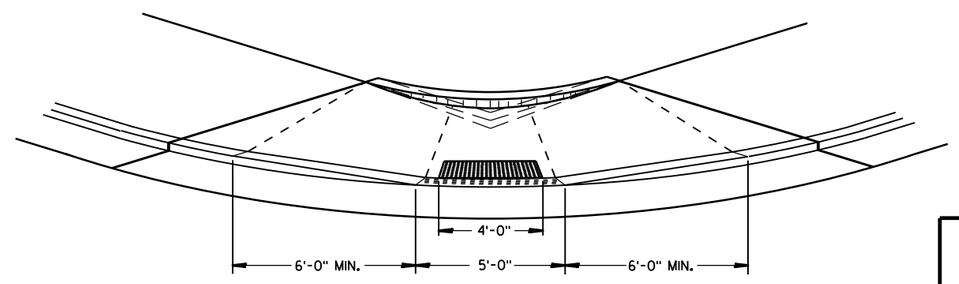

VIEW D-D

CURB RAMPS
TYPES 1 AND 1-A

STATE OF WISCONSIN
DEPARTMENT OF TRANSPORTATION

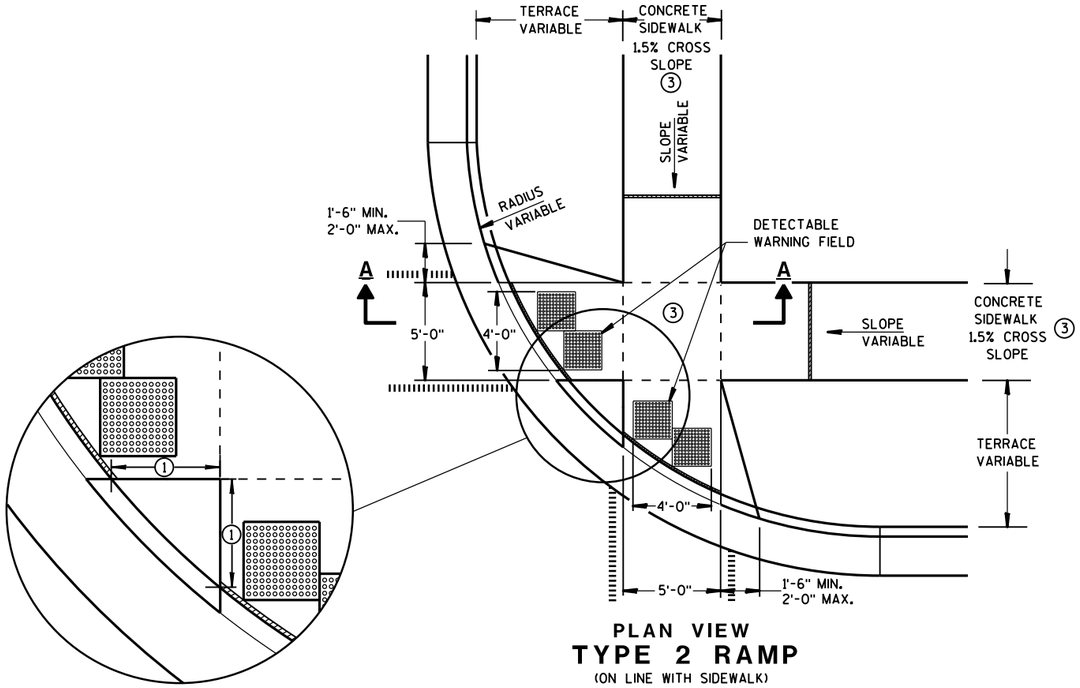

PLAN VIEW
TYPE 2 RAMP
(ON LINE WITH SIDEWALK)

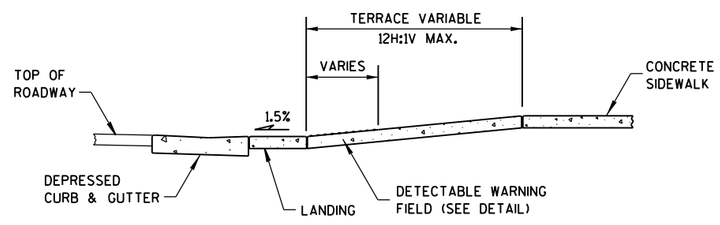

SECTION A-A

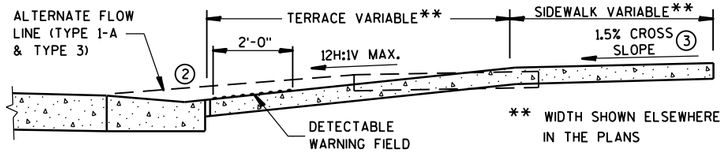

SECTION B-B

GENERAL NOTES

USE THE TYPE 3 RAMP ONLY WHEN A TYPE 1 OR TYPE 2 CANNOT BE ACHIEVED BECAUSE OF FIELD CONDITIONS.

DETECTABLE WARNING FIELDS THAT ARE INSTALLED AS A GROUP OR SIDE BY SIDE, SHALL BE FROM THE SAME MANUFACTURER.

① WHEN THIS DISTANCE IS LESS THAN 6'-0" IT MAY BE DIFFICULT TO ACHIEVE A 12H:1V SLOPE, OR FLATTER, ON THE RAMP. REDUCE CURB HEIGHT IN TRIANGLE AREA TO ACHIEVE 12H:1V SLOPE, OR FLATTER, ON RAMP. 2" MINIMUM CURB HEIGHT.

② GRADE CHANGE BETWEEN GUTTER FLAG SLOPE AND THE CURB RAMP SLOPE SHALL NOT EXCEED 11%. PROVIDE DRAINAGE AWAY FROM CURB RAMP AT GUTTER FLAG INTERFACE.

③ ±0.5% CONSTRUCTION TOLERANCE IN SIDEWALK CROSS SLOPE. THE SIDEWALK CROSS SLOPE SHALL NOT EXCEED 2% WITHOUT PRIOR APPROVAL FROM THE ENGINEER.

LEGEND

- ½" EXPANSION JOINT-SIDEWALK
- CONTRACTION JOINT FIELD LOCATED
- PAVEMENT MARKING CROSSWALK (WHITE)
- ALTERNATIVE LAYOUT

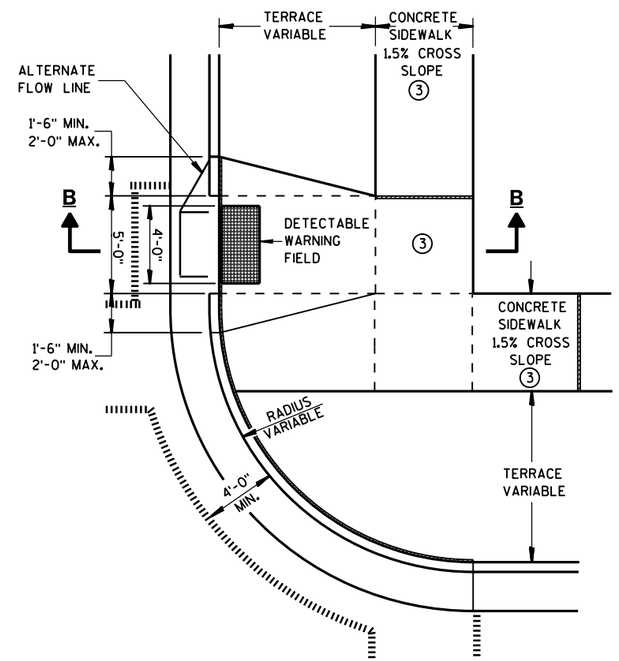

PLAN VIEW
TYPE 3 RAMP
(OUTSIDE OF CROSSWALK AREA)

6

6

CURB RAMPS
TYPES 2 AND 3

STATE OF WISCONSIN
DEPARTMENT OF TRANSPO

S.D.D. 8 D 5-15b

S.D.D. 8 D 5-15b

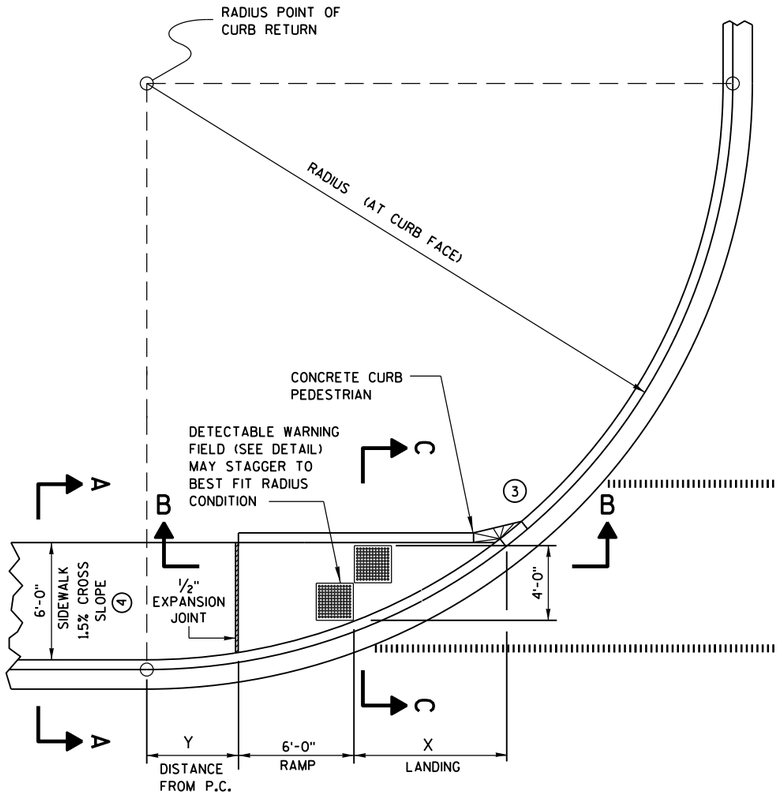

CURB RAMP TYPE 4A
PLAN VIEW

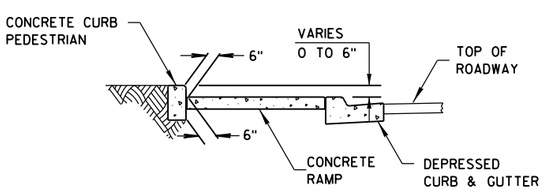

SECTION C-C FOR TYPE 4A

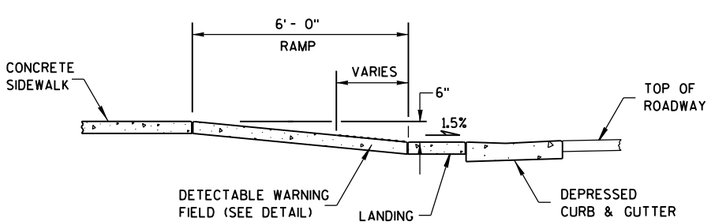

SECTION B-B FOR TYPE 4A

RADIUS (AT CURB FACE)	X	Y
20 FEET	6'-1¾"	2'-7¼"
30 FEET	7'-11¾"	4'-8¼"
40 FEET	9'-5¼"	6'-5"
50 FEET	10'-8¾"	7'-11¼"
60 FEET	11'-10¼"	9'-3½"

INTERMEDIATE RADII CAN BE INTERPOLATED

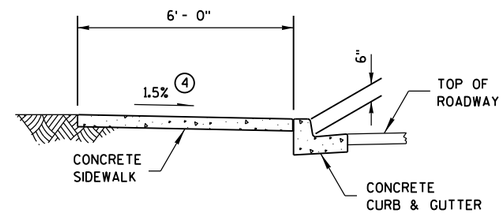

SECTION A-A FOR TYPE 4A

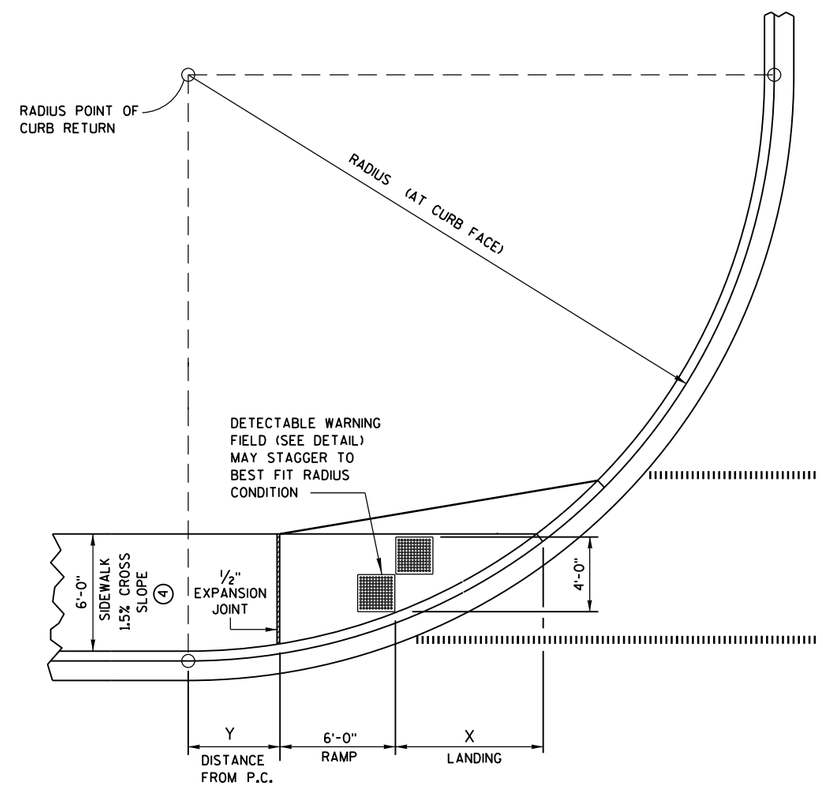

CURB RAMP TYPE 4A1
PLAN VIEW

GENERAL NOTES

AVOID PLACING DRAINAGE STRUCTURES, JUNCTION BOXES OR OTHER OBSTRUCTIONS IN FRONT OF RAMP ACCESS AREAS.

RAMP SLOPES SHALL NOT BE STEEPER THAN 12:1.

DETECTABLE WARNING FIELDS THAT ARE INSTALLED AS A GROUP OR SIDE BY SIDE, SHALL BE FROM THE SAME MANUFACTURER.

(3) INSTALL TRANSITION NOSE. (INCIDENTAL TO OTHER PAY ITEMS.) DO NOT MARK TRANSITION NOSE.

(4) ±0.5% CONSTRUCTION TOLERANCE IN SIDEWALK CROSS SLOPE. THE SIDEWALK CROSS SLOPE SHALL NOT EXCEED 2% WITHOUT PRIOR APPROVAL FROM THE ENGINEER.

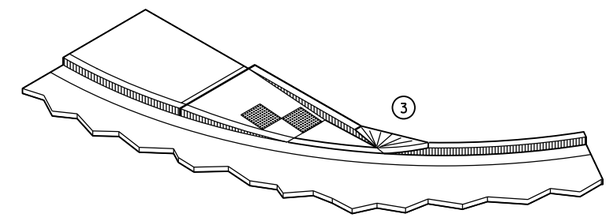

ISOMETRIC VIEW FOR TYPE 4A

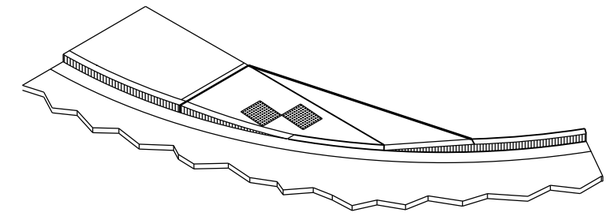

ISOMETRIC VIEW FOR TYPE 4A1

LEGEND

- ½" EXPANSION JOINT-SIDEWALK
- CONTRACTION JOINT FIELD LOCATED
- PAVEMENT MARKING CROSSWALK (WHITE)

CURB RAMPS
TYPES 4A AND 4A1

STATE OF WISCONSIN
DEPARTMENT OF TRANSPOR

6

S.D.D. 8 D 5-15c

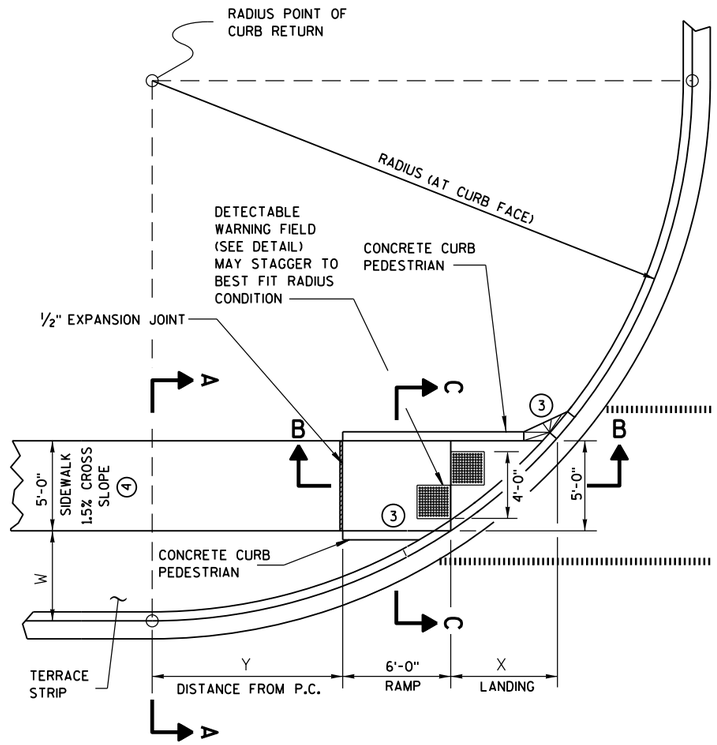

CURB RAMP TYPE 4B
PLAN VIEW

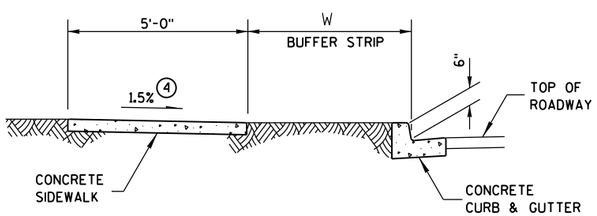

SECTION A-A FOR TYPE 4B

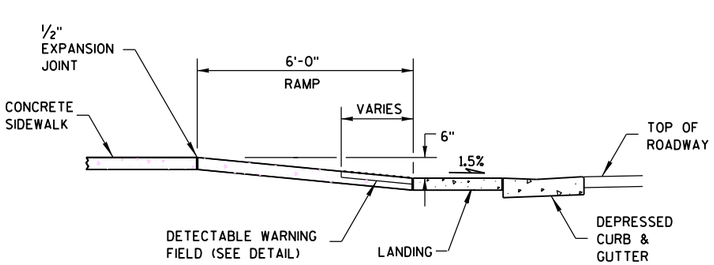

SECTION B-B FOR TYPE 4B

LEGEND

- ½" EXPANSION JOINT-SIDEWALK
- CONTRACTION JOINT FIELD LOCATED
- PAVEMENT MARKING CROSSWALK (WHITE)

RADIUS (AT CURB FACE)	W = 3' - 0"		W = 4' - 0"		W = 5' - 0"		W = 6' - 0"		W = 7' - 0"	
	X	Y	X	Y	X	Y	X	Y	X	Y
20 FEET	5'-5½"	4'-6½"	4'-8½"	6'-0"	4'-1"	7'-2¾"	3'-7"	8'-3½"	3'-1½"	9'-2½"
30 FEET	7'-3¾"	7'-1"	6'-5½"	8'-11½"	5'-9¼"	10'-7"	5'-2½"	12'-0"	4'-8¾"	13'-3¼"
40 FEET	8'-9½"	9'-2½"	7'-10"	11'-5¼"	7'-1"	13'-4½"	6'-5¾"	15'-¾"	5'-11½"	16'-7¼"
50 FEET	10'-¾"	11'-¾"	9'-¼"	13'-7¼"	8'-2½"	15'-9½"	7'-6½"	17'-9"	6'-11¾"	19'-6¼"
60 FEET	11'-2½"	12'-8¾"	10'-¾"	15'-6½"	9'-2¼"	17'-11¾"	8'-5¾"	20'-1¾"	7'-10½"	22'-1½"

INTERMEDIATE RADII CAN BE INTERPOLATED

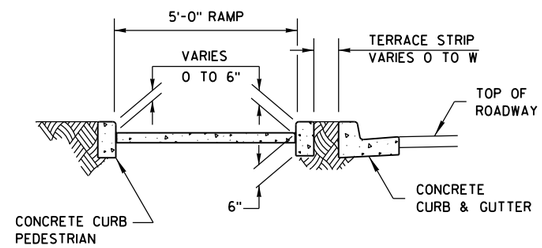

SECTION C-C FOR TYPE 4B

GENERAL NOTES

AVOID PLACING DRAINAGE STRUCTURES, JUNCTION BOXES OR OTHER OBSTRUCTIONS IN FRONT OF RAMP ACCESS AREAS.

RAMP SLOPES SHALL NOT BE STEEPER THAN 12:1.

DETECTABLE WARNING FIELDS THAT ARE INSTALLED AS A GROUP OR SIDE BY SIDE, SHALL BE FROM THE SAME MANUFACTURER.

(3) INSTALL TRANSITION NOSE. (INCIDENTAL TO OTHER PAY ITEMS.) DO NOT MARK TRANSITION NOSE.

(4) ±0.5% CONSTRUCTION TOLERANCE IN SIDEWALK CROSS SLOPE. THE SIDEWALK CROSS SLOPE SHALL NOT EXCEED 2% WITHOUT PRIOR APPROVAL FROM THE ENGINEER.

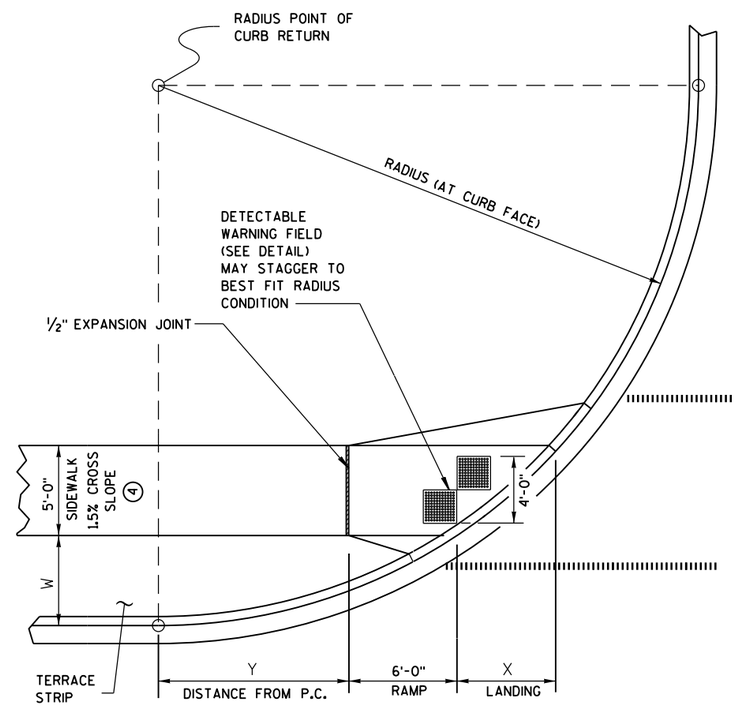

CURB RAMP TYPE 4B1
PLAN VIEW

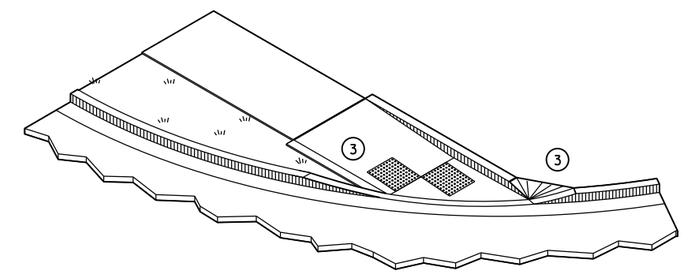

ISOMETRIC VIEW FOR TYPE 4B

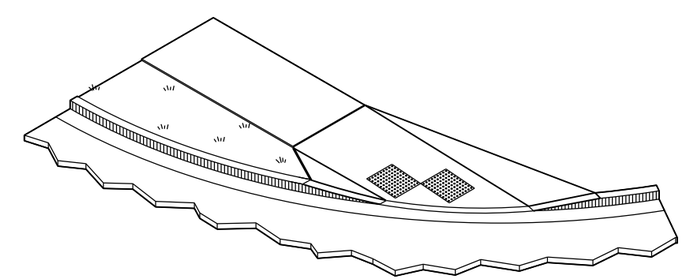

ISOMETRIC VIEW FOR TYPE 4B1

CURB RAMPS
TYPE 4B AND 4B1

STATE OF WISCONSIN
DEPARTMENT OF TRANSPOR

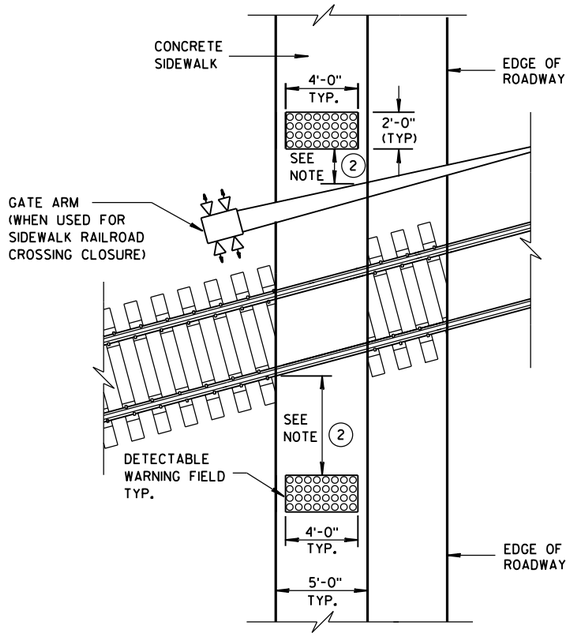

TYPE 8
DETECTABLE WARNINGS AT RAILROAD CROSSING

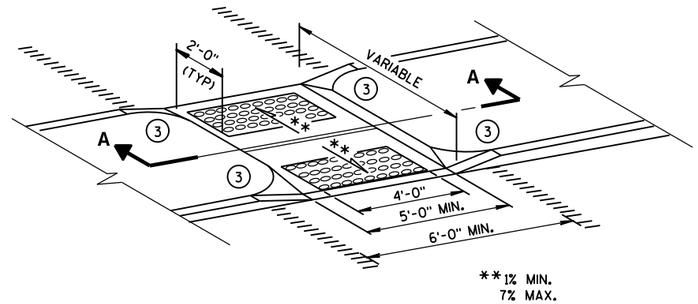

MEDIAN ISLAND
NON-ELEVATED CROSSING
TYPE 5

GENERAL NOTES

SIDEWALK CROSS SLOPE SHALL NOT EXCEED 2%.

DETECTABLE WARNING FIELDS THAT ARE INSTALLED AS A GROUP OR SIDE BY SIDE, SHALL BE FROM THE SAME MANUFACTURER.

1. SLOPE SIDEWALK TOWARD LANDING AS SHOWN WHERE THERE IS NO TERRACE OR WHERE THE TERRACE WIDTH IS LESS THAN 6 FEET WIDE.
2. THE EDGE OF THE DETECTABLE WARNING FIELD NEAREST TO A RAILROAD CROSSING SHALL BE 1.5 FEET ± 0.1' FROM THE FACE OF THE GATE ARM IF THE GATE ARM EXTENDS ACROSS THE SIDEWALK. WHERE THERE IS NO PEDESTRIAN GATE, THE EDGE OF THE DETECTABLE WARNING FIELD NEAREST TO THE RAILROAD CROSSING SHALL BE 15 FEET FROM THE NEAREST RAIL.
3. INSTALL TRANSITION NOSE. (INCIDENTAL TO OTHER PAY ITEMS.) DO NOT MARK TRANSITION NOSE.
4. ±0.5% CONSTRUCTION TOLERANCE IN SIDEWALK CROSS SLOPE. THE SIDEWALK CROSS SLOPE SHALL NOT EXCEED 2% WITHOUT PRIOR APPROVAL FROM THE ENGINEER.

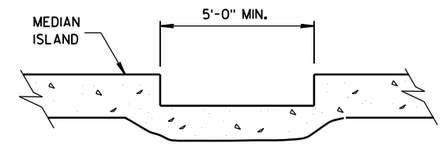

SECTION A-A

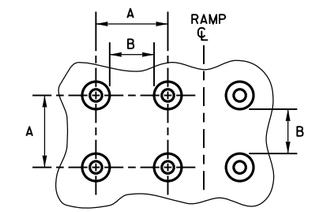

PLAN VIEW

	MIN.	MAX.
A	1.6"	2.4"
B	0.65"	1.5"
C	*	*
D	0.9"	1.4"

* THE C DIMENSION IS 50% TO 65% OF THE D DIMENSION.

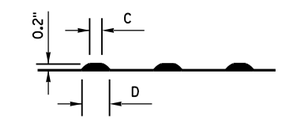

ELEVATION VIEW

TRUNCATED DOMES
DETECTABLE WARNING PATTERN DETAIL

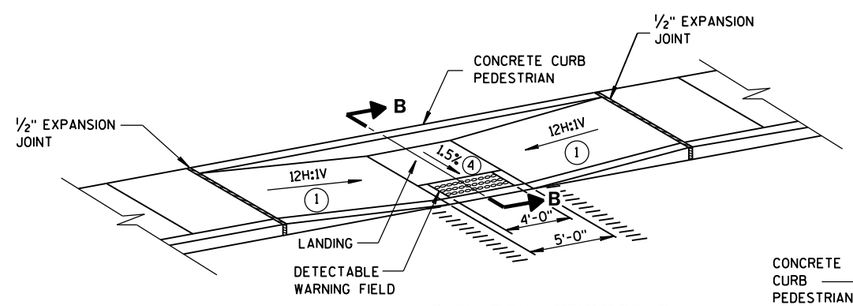

MID-BLOCK CROSSING
TYPE 7A

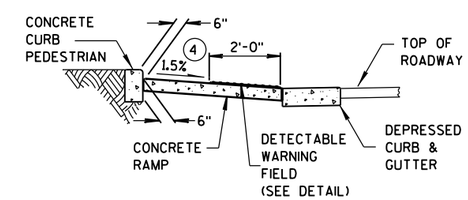

SECTION B-B

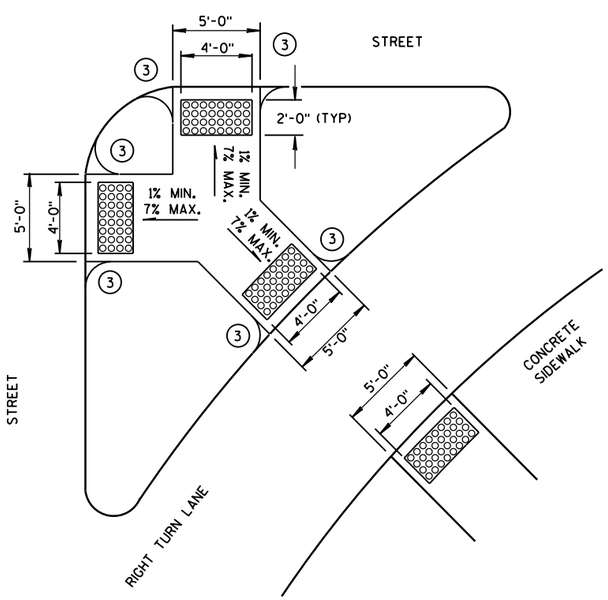

TYPE 6
DETECTABLE WARNING AT ISLANDS

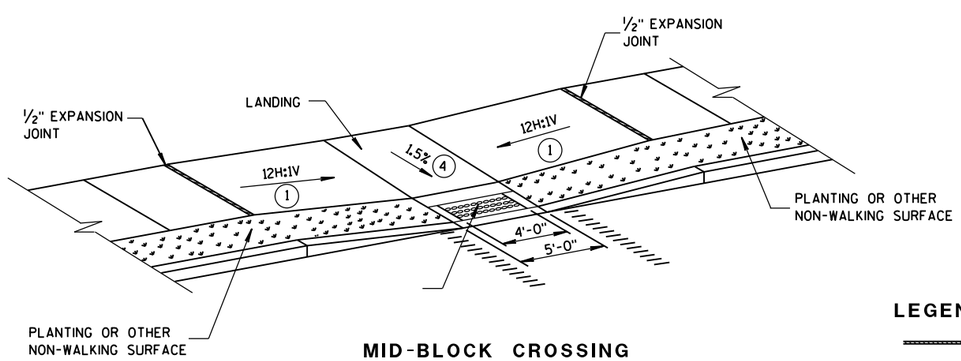

MID-BLOCK CROSSING
TYPE 7B

NOTE: THESE PARALLEL AND PARALLEL/PERPENDICULAR CURB RAMPS MAY BE USED AT INTERSECTIONS AND MID BLOCK LOCATIONS.

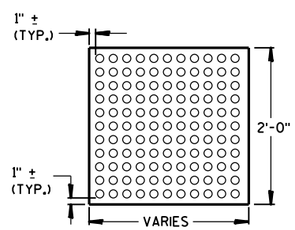

PLAN VIEW
DETECTABLE WARNING FIELD (TYPICAL)

LEGEND

- ½" EXPANSION JOINT-SIDEWALK
- CONTRACTION JOINT FIELD LOCATED
- PAVEMENT MARKING CROSSWALK (WHITE)

CURB RAMPS
TYPES 5, 6, 7A, 7B & 8

STATE OF WISCONSIN
DEPARTMENT OF TRANSPORTATION

APPROVED
2-6-2013 — DATE
/S/ Jerry H. Zogg — ROADWAY STANDARDS DEVELOPMENT ENGINEER
FHWA

6

6

S.D.D. 8 D 5-15e

S.D.D. 8 D 5-15e

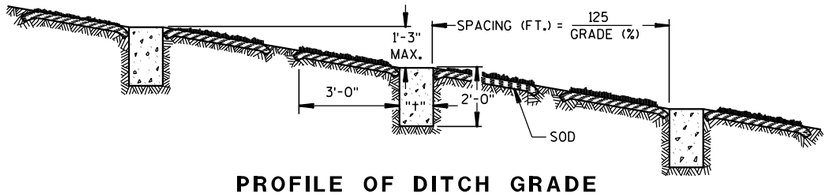

PROFILE OF DITCH GRADE

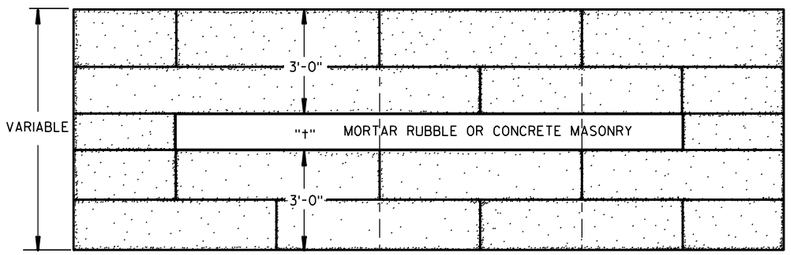

PLAN VIEW SHOWING MASONRY AND SOD

"+" - MASONRY THICKNESS SHALL BE 0'-9" FOR CONCRETE AND 1'-0" FOR MORTAR RUBBLE.

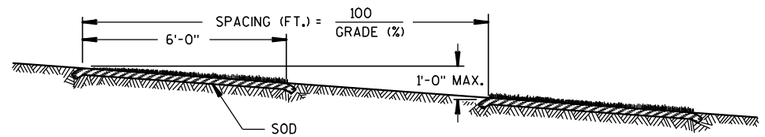

PROFILE OF DITCH GRADE

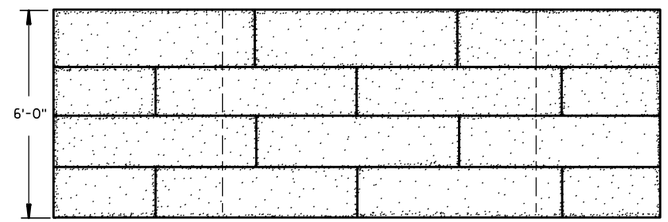

PLAN VIEW SHOWING SOD

GENERAL NOTES

DETAILS OF CONSTRUCTION, MATERIALS AND WORKMANSHIP NOT SHOWN ON THIS DRAWING SHALL CONFORM TO THE PERTINENT REQUIREMENTS OF THE STANDARD SPECIFICATIONS AND THE APPLICABLE SPECIAL PROVISIONS.

ALTERNATE DESIGNS FOR DITCH CHECKS, OF THE MATERIAL OR COMBINATION OF MATERIALS SHOWN HEREON, MAY BE USED UPON WRITTEN PERMISSION OF THE ENGINEER.

SOD STRIPS FOR DITCH CHECKS MAY BE PLACED EITHER TRANSVERSELY OR LONGITUDINALLY TO THE DIRECTION OF WATER FLOW.

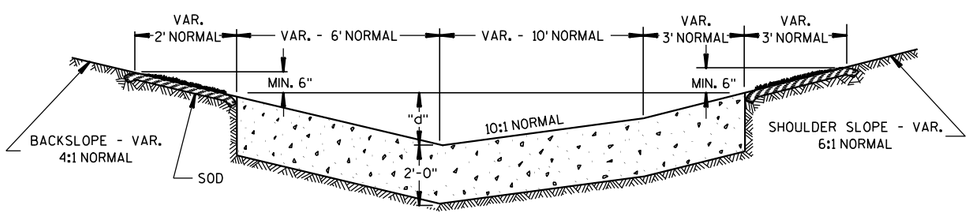

SIDE DITCH CROSS SECTION

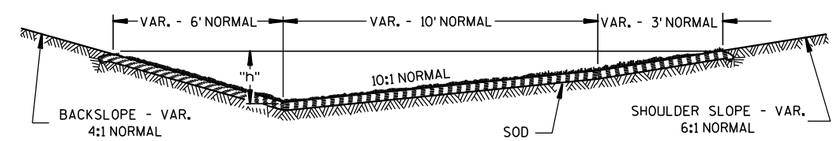

SIDE DITCH CROSS SECTION

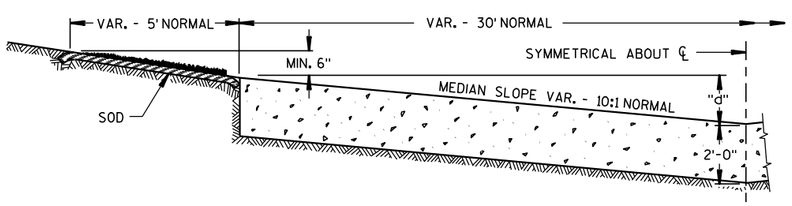

MEDIAN DITCH CROSS SECTION

"d" - THE MINIMUM DEPTH OF THE MASONRY PORTION OF THE DITCH CHECKS SHALL BE EQUAL TO THE MAXIMUM DEPTH OF FLOW. THE NORMAL "d" WILL BE 1'-6".

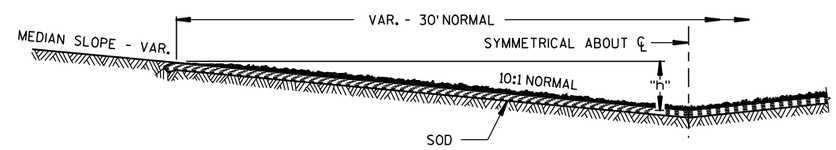

MEDIAN DITCH CROSS SECTION

"h" - THE MINIMUM HEIGHT OF DITCH TO BE SODDED SHALL BE EQUAL TO THE MAXIMUM DEPTH OF FLOW PLUS 6". THE NORMAL "h" WILL BE 1'-6".

MASONRY AND SOD DITCH CHECKS

SOD DITCH CHECKS

SOD OR MASONRY AND SOD DITCH CHECKS	
STATE OF WISCONSIN DEPARTMENT OF TRANSPORTATION	
APPROVED	
9/7/71 DATE	/S/ L.C. Harr'-- ACTING CHIEF DESIG R
FHWA	

6

S.D.D. 8 E 4-2

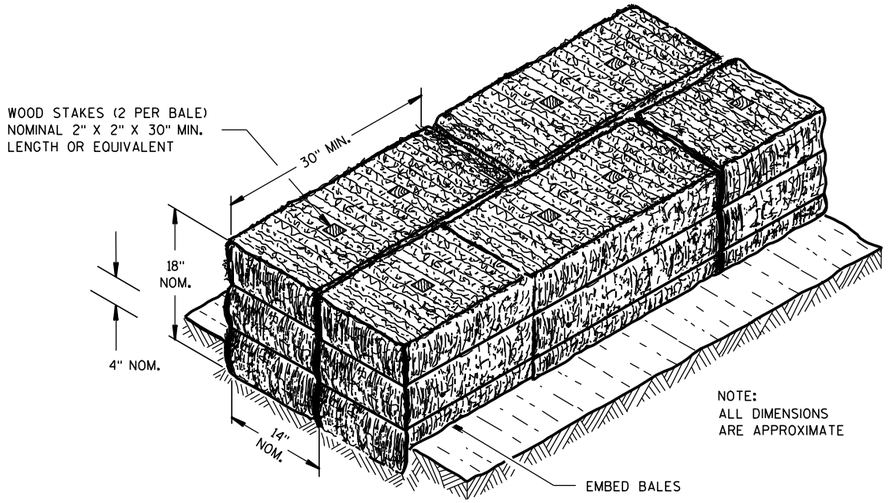

SECTION A-A

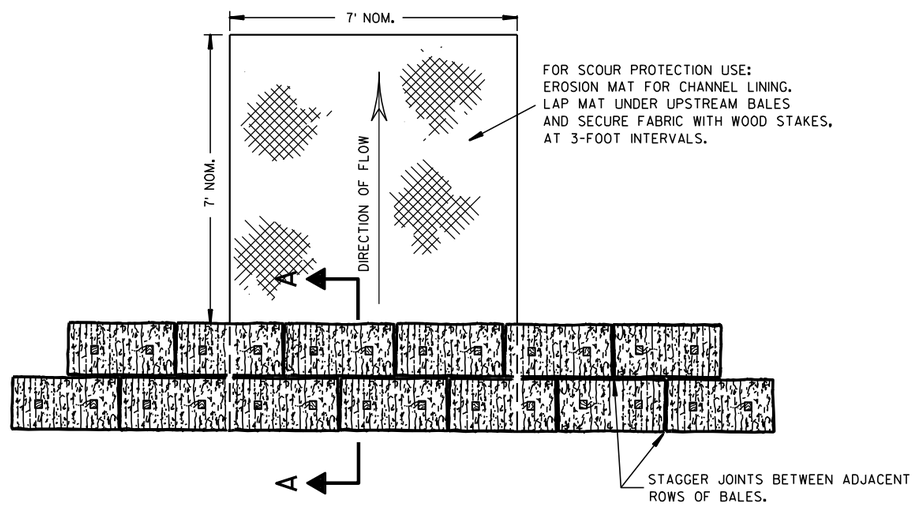

PLAN VIEW

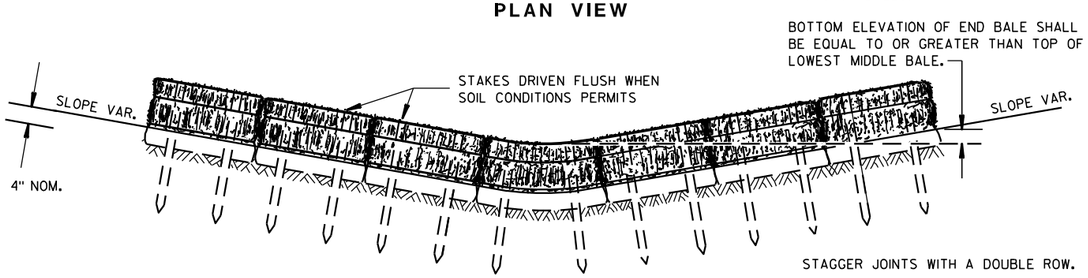

FRONT ELEVATION

TEMPORARY DITCH CHECK USING EROSION BALES ①

GENERAL NOTES

DETAILS OF CONSTRUCTION, MATERIALS AND WORKMANSHIP NOT SHOWN ON THIS DRAWING SHALL CONFORM TO THE PERTINENT REQUIREMENTS OF THE STANDARD SPECIFICATIONS AND THE APPLICABLE SPECIAL PROVISIONS.

① TEMPORARY DITCH CHECKS EITHER EROSION BALES OR MANUFACTURED SHALL BE PAID FOR UNDER THE BID ITEM OF TEMPORARY DITCH CHECK. THE DEPARTMENT WILL NOT PAY FOR TEMPORARY DITCH CHECKS CONSTRUCTED OF A SINGLE ROW OF EROSION BALES.

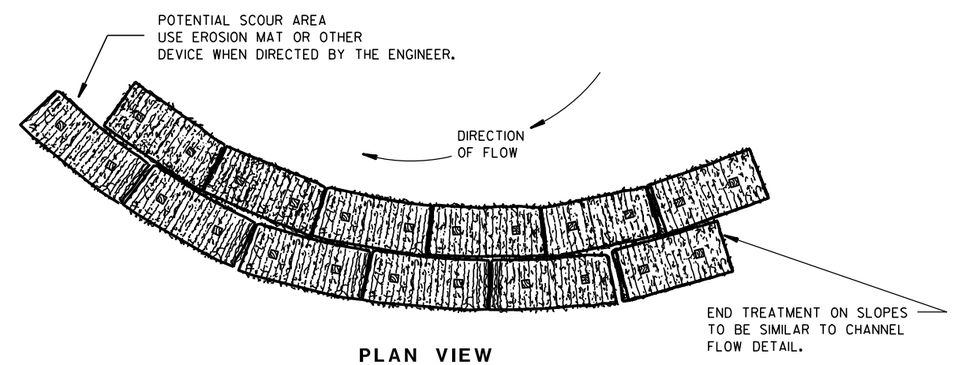

PLAN VIEW

WHEN ALTERING THE DIRECTION OF FLOW

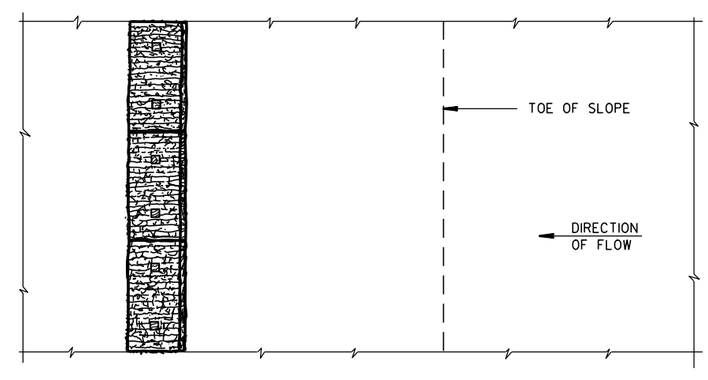

PLAN VIEW

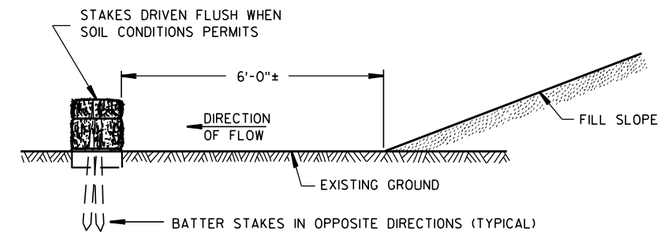

FRONT ELEVATION

WHEN EXISTING GROUND SLOPES AWAY FROM FILL SLOPE

EROSION BALES FOR SHEET FLOW

TYPICAL INSTALLATIONS OF EROSION BALES / TEMPORARY DITCH CHECKS

STATE OF WISCONSIN
DEPARTMENT OF TRANSPORTATION

APPROVED

6/04/02 — DATE

/S/ Beth Cann — CHIEF ROADWAY DEVELOPMENT ENGINEER

FHWA

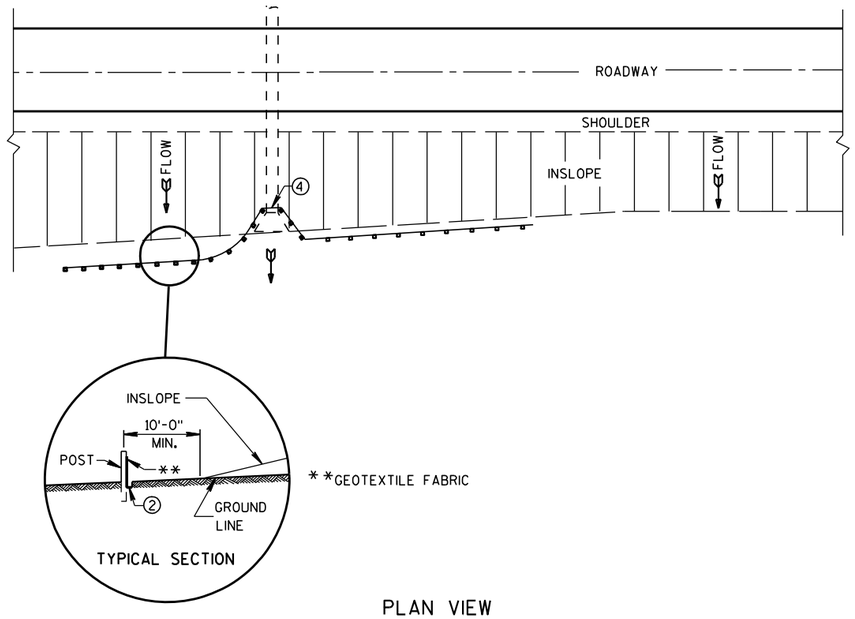

PLAN VIEW

TYPICAL APPLICATION OF SILT FENCE

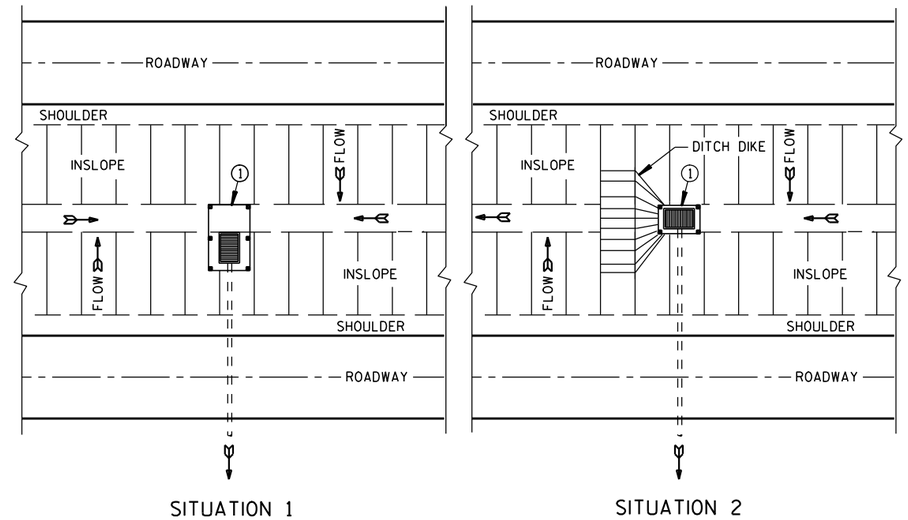

PLAN VIEW

SILT FENCE AT MEDIAN SURFACE DRAINS

GENERAL NOTES

DETAILS OF CONSTRUCTION NOT SHOWN ON THIS DRAWING SHALL CONFORM TO THE PERTINENT REQUIREMENTS OF THE STANDARD SPECIFICATIONS AND APPLICABLE SPECIAL PROVISIONS.

① HORIZONTAL BRACE REQUIRED WITH 2" X 4" WOODEN FRAME OR EQUIVALENT AT TOP OF POSTS.

② FOR MANUAL INSTALLATIONS THE TRENCH SHALL BE A MINIMUM OF 4" WIDE & 6" DEEP TO BURY AND ANCHOR THE GEOTEXTILE FABRIC. FOLD MATERIAL TO FIT TRENCH AND BACKFILL & COMPACT TRENCH WITH EXCAVATED SOIL.

③ WOOD POSTS SHALL BE A MINIMUM SIZE OF 1⅛" X 1⅛" OF OAK OR HICKORY.

④ SILT FENCE TO EXTEND ACROSS THE TOP OF THE PIPE.

⑤ CONSTRUCT SILT FENCE FROM A CONTINUOUS ROLL IF POSSIBLE BY CUTTING LENGTHS TO AVOID JOINTS. IF A JOINT IS NECESSARY USE ONE OF THE FOLLOWING TWO METHODS; A) OVERLAP THE END POSTS AND TWIST, OR ROTATE, AT LEAST 180 DEGREES. B) HOOK THE END OF EACH SILT FENCE LENGTH.

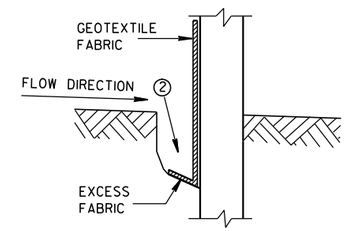

TRENCH DETAIL

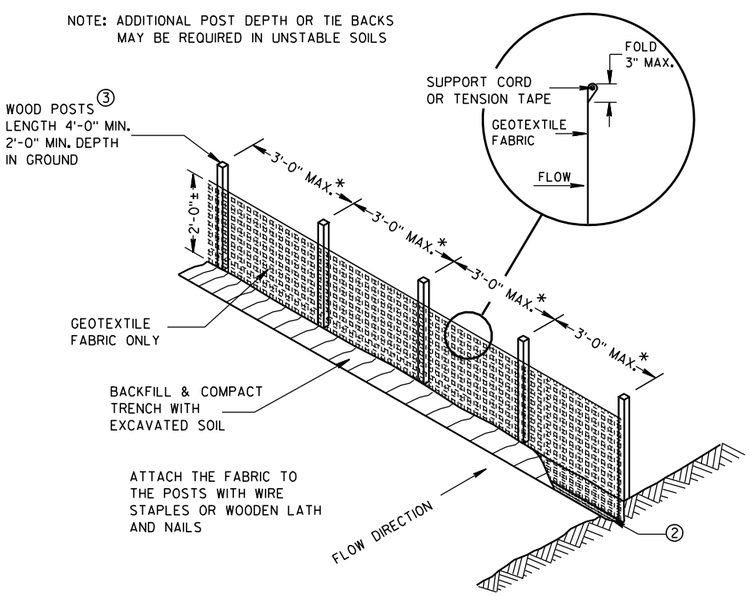

*NOTE: 8'-0" POST SPACING ALLOWED IF A WOVEN GEOTEXTILE FABRIC IS USED.

SILT FENCE

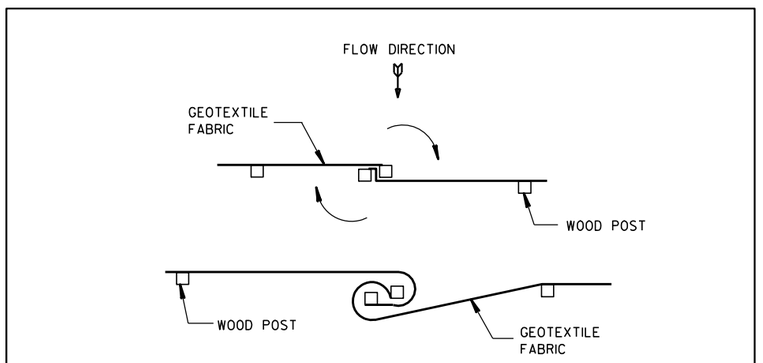

TWIST METHOD

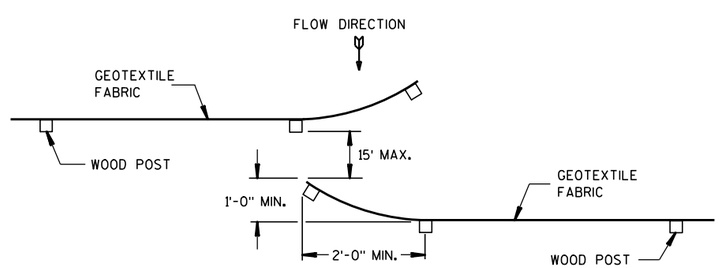

HOOK METHOD

JOINING TWO LENGTHS OF SILT FENCE ⑤

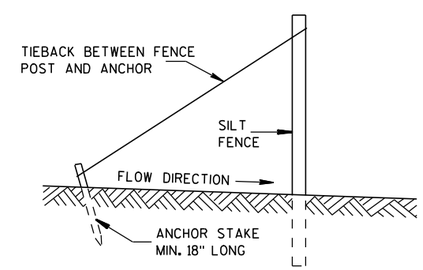

SILT FENCE TIE BACK

(WHEN REQUIRED BY THE ENGINEER)

SILT FENCE

STATE OF WISCONSIN
DEPARTMENT OF TRANSPORTATION

APPROVED
4-29-05 /S/ Beth Cann-
DATE CHIEF ROADWAY DEVELOP ENGINEER
FHWA

6

6

S.D.D. 8 E 9-6

S.D.D. 8 E 9-6

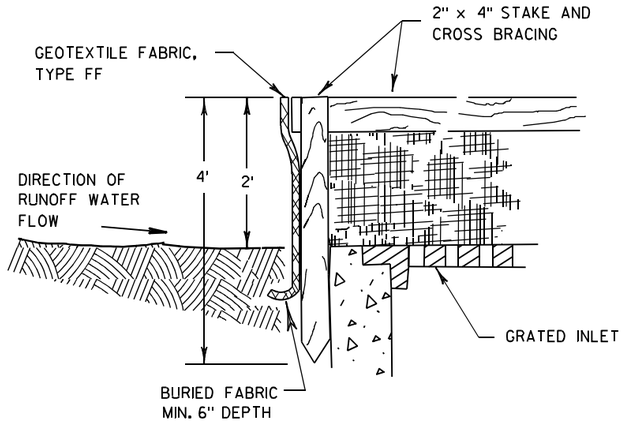

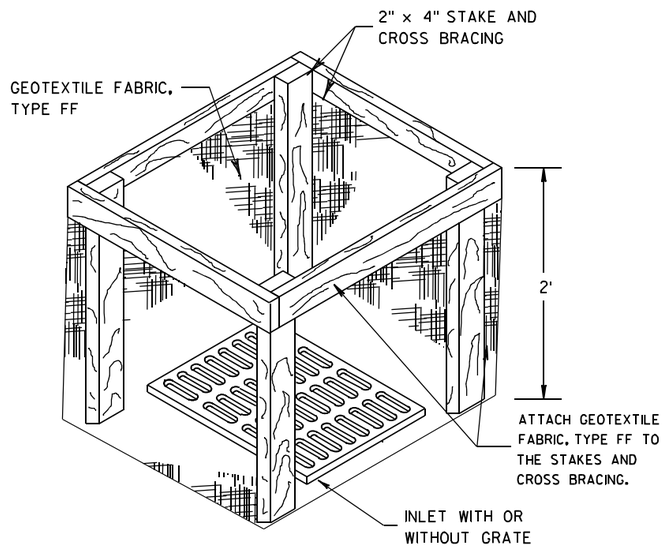

INLET PROTECTION, TYPE A

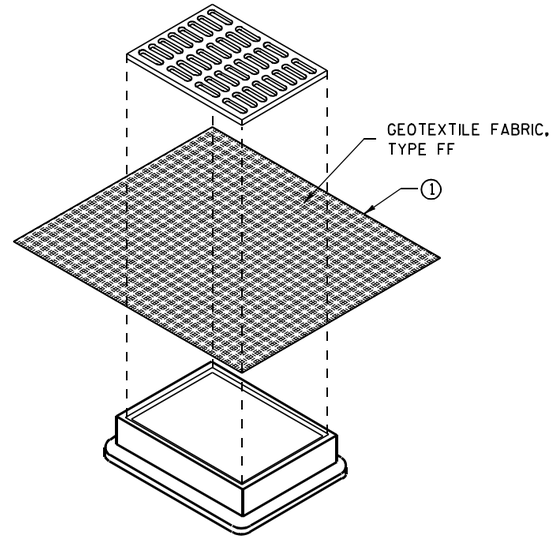

INLET PROTECTION, TYPE B (WITHOUT CURB BOX)

(CAN BE INSTALLED IN ANY INLET WITHOUT A CURB BOX)

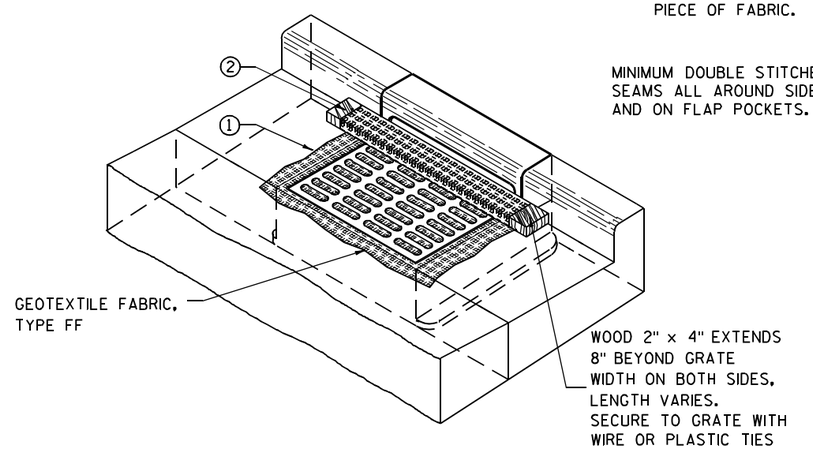

INLET PROTECTION, TYPE C (WITH CURB BOX)

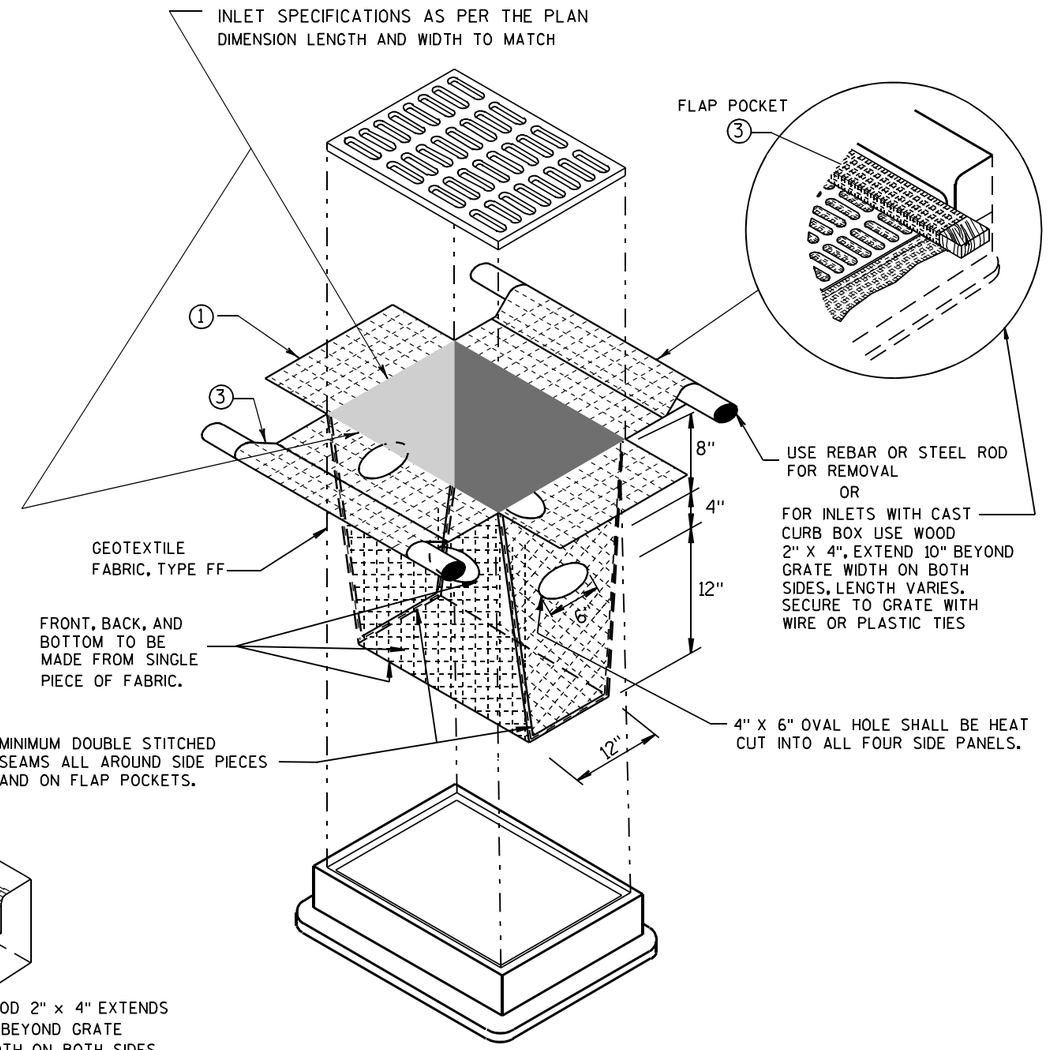

INLET PROTECTION, TYPE D

(CAN BE INSTALLED IN ANY INLET TYPE WITH OR WITHOUT A CURB BOX AS PER NOTE 2)

GENERAL NOTES

INLET PROTECTION DEVICES SHALL BE MAINTAINED OR REPLACED AT THE DIRECTION OF THE ENGINEER.

MANUFACTURED ALTERNATIVES APPROVED AND LISTED ON THE DEPARTMENT'S EROSION CONTROL PRODUCT ACCEPTABILITY LIST MAY BE SUBSTITUTED.

WHEN REMOVING OR MAINTAINING INLET PROTECTION, CARE SHALL BE TAKEN SO THAT THE SEDIMENT TRAPPED ON THE GEOTEXTILE FABRIC DOES NOT FALL INTO THE INLET. ANY MATERIAL FALLING INTO THE INLET SHALL BE REMOVED IMMEDIATELY.

1. FINISHED SIZE, INCLUDING FLAP POCKETS WHERE REQUIRED, SHALL EXTEND A MINIMUM OF 10" AROUND THE PERIMETER TO FACILITATE MAINTENANCE OR REMOVAL.
2. FOR INLET PROTECTION, TYPE C (WITH CURB BOX), AN ADDITIONAL 18" OF FABRIC IS WRAPPED AROUND THE WOOD AND SECURED WITH STAPLES. THE WOOD SHALL NOT BLOCK THE ENTIRE HEIGHT OF THE CURB BOX OPENING.
3. FLAP POCKETS SHALL BE LARGE ENOUGH TO ACCEPT WOOD 2X4.

INSTALLATION NOTES

TYPE B & C

TRIM EXCESS FABRIC IN THE FLOW LINE TO WITHIN 3" OF THE GRATE.

THE CONTRACTOR SHALL DEMONSTRATE A METHOD OF MAINTENANCE, USING A SEWN FLAP, HAND HOLDS OR OTHER METHOD TO PREVENT ACCUMULATED SEDIMENT FROM ENTERING THE INLET.

TYPE D

DO NOT INSTALL INLET PROTECTION TYPE D IN INLETS SHALLOWER THAN 30", MEASURED FROM THE BOTTOM OF THE INLET TO THE TOP OF THE GRATE.

TRIM EXCESS FABRIC IN THE FLOW LINE TO WITHIN 3" OF THE GRATE.

THE INSTALLED BAG SHALL HAVE A MINIMUM SIDE CLEARANCE, BETWEEN THE INLET WALLS AND THE BAG, MEASURED AT THE BOTTOM OF THE OVERFLOW HOLES, OF 3". WHERE NECESSARY THE CONTRACTOR SHALL CINCH THE BAG, USING PLASTIC ZIP TIES, TO ACHIEVE THE 3" CLEARANCE. THE TIES SHALL BE PLACED AT A MAXIMUM OF 4" FROM THE BOTTOM OF THE BAG.

INLET PROTECTION TYPE A, B, C, AND D

STATE OF WISCONSIN
DEPARTMENT OF TRANSPORTATION

APPROVED
10/16/02 — DATE
/S/ Beth Cannestra — CHIEF ROADWAY DEVELOPMENT ENGINEER
FHWA

6

S.D.D. 8 E 10-2

METAL APRON ENDWALLS

PIPE DIA. (IN.)	MIN. THICK. (Inches) STEEL	MIN. THICK. (Inches) ALUM.	DIMENSIONS (Inches) A (±1")	B (MAX.)	H (±1")	L (±1 1/2")	L1 ①	L2 ①	W (±2")	APPROX. SLOPE	BODY
12	.064	.060	6	6	6	21	12	17 1/2	24	2 1/2 to 1	1 Pc.
15	.064	.060	7	8	6	26	14	21 3/4	30	2 1/2 to 1	1 Pc.
18	.064	.060	8	10	6	31	15	28 1/4	36	2 1/2 to 1	1 Pc.
21	.064	.060	9	12	6	36	18	29 5/8	42	2 1/2 to 1	1 Pc.
24	.064	.075	10	13	6	41	18	37 1/4	48	2 1/2 to 1	1 Pc.
30	.079	.075	12	16	8	51	18	52 1/4	60	2 1/2 to 1	1 Pc.
36	.079	.105	14	19	9	60	24	59 3/4	72	2 1/2 to 1	2 Pc.
42	.109	.105	16	22	11	69	24	75 5/8	84	2 1/2 to 1	2 Pc.
48	.109	.105	18	27	12	78	24	81	90	2 1/4 to 1	3 Pc.
54	.109	.105	18	30	12	84	30	85 1/2	102	2 1/4 to 1	3 Pc.
60	.109×	.105×	18	33	12	87	—	—	114	2 to 1	3 Pc.
66	.109×	.105×	18	36	12	87	—	—	120	2 to 1	3 Pc.
72	.109×	.105×	18	39	12	87	—	—	126	2 to 1	3 Pc.
78	.109×	.105×	18	42	12	87	—	—	132	1 1/2 to 1	3 Pc.
84	.109×	.105×	18	45	12	87	—	—	138	1 1/2 to 1	3 Pc.
90	.109×	.105×	18	37	12	87	—	—	144	1 1/2 to 1	3 Pc.
96	.109×	.105×	18	35	12	87	—	—	150	1 1/2 to 1	3 Pc.

× EXCEPT CENTER PANEL
SEE GENERAL NOTES

REINFORCED CONCRETE APRON ENDWALLS

PIPE DIA. (IN.)	DIMENSIONS (Inches) T	A	B	C	D	E	G	APPROX. SLOPE
12	2	4	24	48 7/8	72 7/8	24	2	3 to 1
15	2 1/4	6	27	46	73	30	2 1/4	3 to 1
18	2 1/2	9	27	46	73	36	2 1/2	3 to 1
21	2 3/4	9	36	37 1/2	73 1/2	42	2 3/4	3 to 1
24	3	9 1/2	43 1/2	30	73 1/2	48	3	3 to 1
27	3 1/4	10 1/2	49 1/2	24	73 1/2	54	3 1/4	3 to 1
30	3 1/2	12	54	19 3/4	73 1/2	60	3 1/2	3 to 1
36	4	15	63	34 3/4	97 3/4	72	4	3 to 1
42	4 1/2	21	63	35	98	78	4 1/2	3 to 1
48	5	24	72	26	98	84	5	3 to 1
54	5 1/2	27	65	*33 1/4-**35	*98 1/4-**100	90	5 1/2	2 2/5 to 1
60	6	*30-**35	60	39	99	96	5	2 to 1
66	6 1/2	*24-**30	*72-**78	*21-**27	99	102	5 1/2	2 to 1
72	7	*24-**36	78	21	99	108	6	2 to 1
78	7 1/2	*24-**36	78	21	99	114	6 1/2	2 to 1
84	8	36	90 1/2	21	111 1/2	120	6 1/2	1 1/2 to 1
90	8 1/2	41	87 1/2	24	111 1/2	132	6 1/2	1 1/2 to 1

*MINIMUM
**MAXIMUM

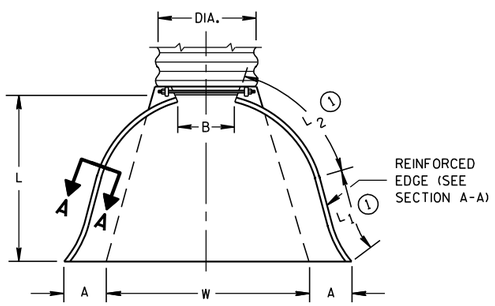

PLAN VIEW

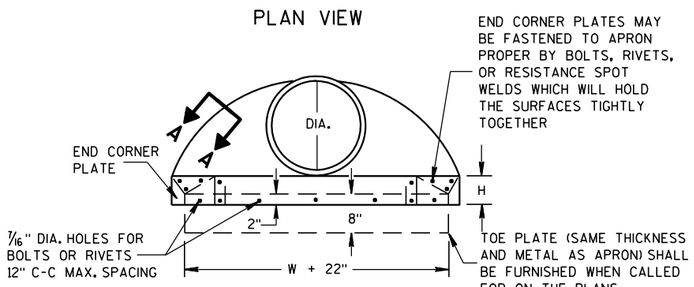

END VIEW

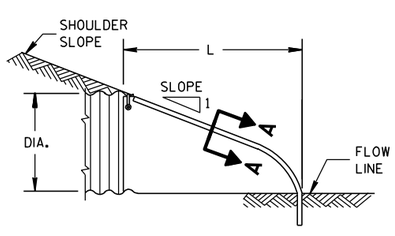

SIDE ELEVATION

METAL ENDWALLS

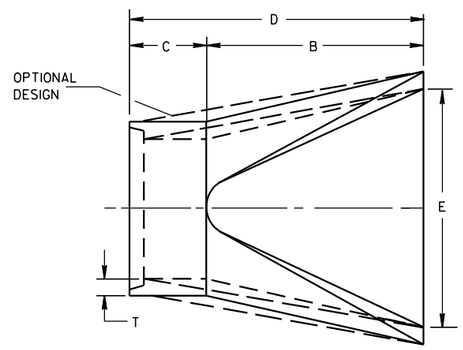

PLAN

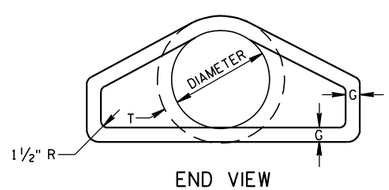

END VIEW

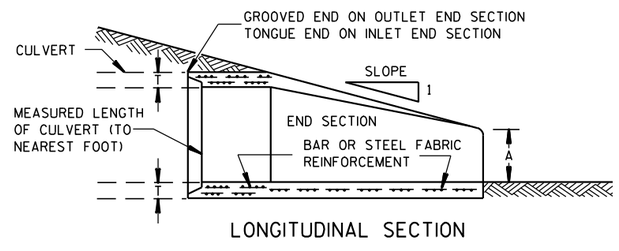

LONGITUDINAL SECTION

CONCRETE ENDWALLS

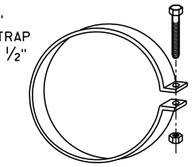

ALTERNATE FOR TYPE 1 CONNECTION

END SECTION CONNECTOR STRAP

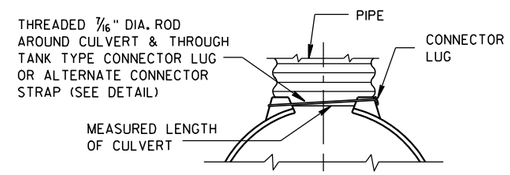

TYPE 1
FOR 12" THRU 24" CORR. PIPE

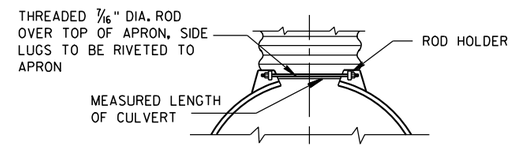

TYPE 2
FOR 30" THRU 96" CORR. PIPE

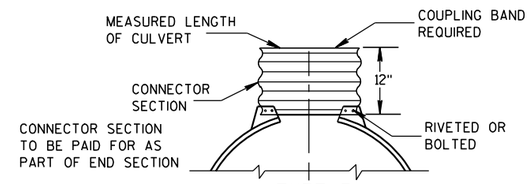

TYPE 3
FOR 42" THRU 96" CORR. PIPE

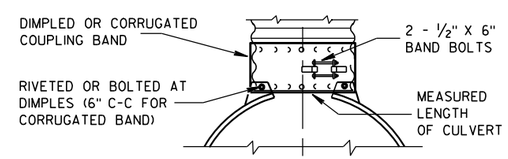

TYPE 5
ALTERNATE FOR:
ALL SIZES CORRUGATED CIRCULAR PIPE

NOTE: DIMPLED BAND FITS OVER OUTSIDE OF ENDWALL, AND CORRUGATED BAND FITS INSIDE ENDWALL. DIMPLED BAND MAY BE USED WITH HELICALLY CORRUGATED PIPE.

FOR CIRCUMFERENTIALLY CORRUGATED PIPE USE ENDWALL CONNECTION DETAILS 1, 2, 3 OR 5 AS APPLICABLE.

FOR HELICALLY CORRUGATED PIPE USE ENDWALL CONNECTION DETAILS 1, 2 OR 5.

FOR HELICALLY CORRUGATED PIPES WITH TWO CIRCUMFERENTIAL CORRUGATIONS AT EACH END USE ENDWALL CONNECTION DETAILS 1, 2 OR 3.

CONNECTION DETAILS

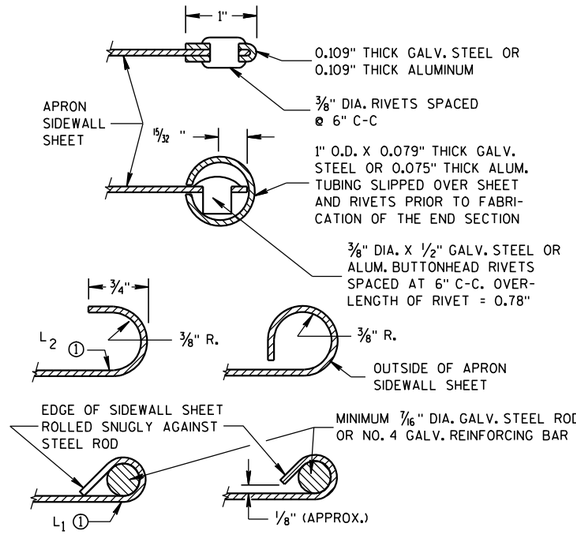

SECTION A-A

GENERAL NOTES

DETAILS OF CONSTRUCTION, MATERIALS AND WORKMANSHIP NOT SHOWN ON THIS DRAWING SHALL CONFORM TO THE PERTINENT REQUIREMENTS OF THE STANDARD SPECIFICATIONS AND THE APPLICABLE SPECIAL PROVISIONS.

CONCRETE CULVERT ENDWALLS MAY NOT BE USED WITH GALVANIZED STEEL OR ALUMINUM CULVERT PIPE OR VISE VERSA. GALVANIZED STEEL OR ALUMINUM ENDWALLS SHALL NORMALLY BE INSTALLED ON CULVERT PIPE OF THE SAME METAL.

ALL THREE PIECE STEEL APRON ENDWALLS FOR 60" DIAMETER PIPE AND LARGER SHALL HAVE 0.109" SIDES AND 0.138" CENTER PANELS. ALL THREE PIECE ALUMINUM APRON ENDWALLS FOR 60" DIAMETER PIPE AND LARGER SHALL HAVE 0.105" SIDES AND 0.134" CENTER PANELS. THE WIDTH OF CENTER PANELS SHALL BE GREATER THAN 20 PERCENT OF THE PIPE PERIMETER.

LAP SEAMS SHALL BE TIGHTLY JOINED BY GALVANIZED RIVETS OR BOLTS FOR STEEL UNITS AND ALUMINUM RIVETS AND BOLTS FOR ALUMINUM UNITS. FOR THE 60" THROUGH 96" DIAMETER APRON ENDWALL SIZES, THE REINFORCED EDGES AND CENTER PANEL SEAMS SHALL BE FURTHER REINFORCED WITH GALVANIZED STEEL OR ALUMINUM STIFFENER ANGLES. THE ANGLES SHALL BE ATTACHED BY GALVANIZED NUTS AND BOLTS FOR STEEL UNITS AND ALUMINUM NUTS AND BOLTS FOR ALUMINUM UNITS.

WHERE TWO OR MORE PIPES WITH APRON ENDWALLS ARE LAID ADJACENT TO EACH OTHER, THEY SHALL BE SEPARATED BY A DISTANCE SUFFICIENT TO PROVIDE A MINIMUM CLEARANCE OF 6 INCHES BETWEEN APRON ENDWALLS.

① FOR PIPE SIZES UP TO 60" DIAMETER, A 180° ROLLED EDGE MAY BE USED INSTEAD OF STEEL ROD REINFORCEMENT. SEE SECTION A-A.

APRON ENDWALLS FOR CULVERT PIPE

STATE OF WISCONSIN
DEPARTMENT OF TRANSPORTATION

APPROVED
11/30/94 — DATE
/S/ Rory L. Rhinesmith — CHIEF ROADWAY DEVELOPMENT ENGINEER
FHWA

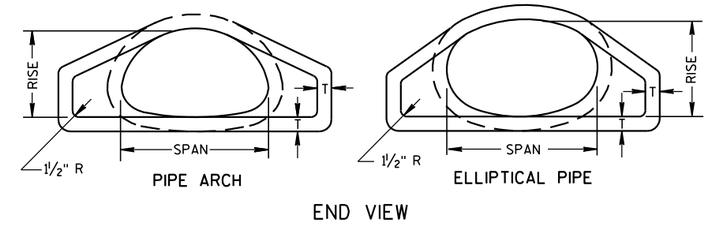

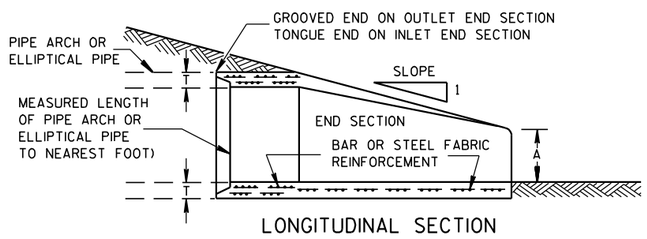

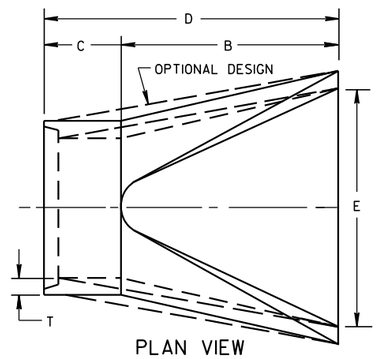

CONCRETE ENDWALLS

2- ⅔" X ½" CORRUGATIONS														
EQUIV. DIA. (Inches)	(Inches)		MIN. THICK. (Inches)		DIMENSIONS (Inches)							APPROX. SLOPE	BODY
	SPAN	RISE	STEEL	ALUM.	A (±1")	B (MAX.)	H (±1")	L (±1½")	L1 ①	L2 ①	W (±2")		
15	17	13	.064	.060	7	9	6	19	14	16	30	2½ to 1	1 Pc.
18	21	15	.064	.060	7	10	6	23	14	19⅜	36	2½ to 1	1 Pc.
21	24	18	.064	.060	8	12	6	28	18	21¾	42	2½ to 1	1 Pc.
24	28	20	.064	.060	9	14	6	32	18	27½	48	2½ to 1	1 Pc.
30	35	24	.079	.075	10	16	6	39	18	37⅝	60	2½ to 1	1 Pc.
36	42	29	.079	.075	12	18	8	46	24	45⅜	75	2½ to 1	1 Pc.
42	49	33	.109	.105	13	21	9	53	24	54¾	85	2½ to 1	2 Pc.
48	57	38	.109	.105	18	26	12	63	24	68	90	2½ to 1	3 Pc.
54	64	43	.109	.105	18	30	12	70	24	72¾	102	2¼ to 1	3 Pc.
60	71	47	.109*	.105*	18	33	12	77	30	82¼	114	2¼ to 1	3 Pc.
66	77	52	.109*	.105*	18	36	12	77	—	—	126	2 to 1	3 Pc.
72	83	57	.109*	.105*	18	39	12	77	—	—	138	2 to 1	3 Pc.

3" X 1" CORRUGATIONS														
EQUIV. DIA. (Inches)	(Inches)		MIN. THICK. (Inches)		DIMENSIONS (Inches)							APPROX. SLOPE	BODY
	SPAN	RISE	STEEL	ALUM.	A (±1")	B (MAX.)	H (±1")	L (±1½")	L1 ①	L2 ①	W (±2")		
48	53	41	.109	.105	18	26	12	63	24	72¾	90	2½ to 1	2 Pc.
54	60	46	.109	.105	18	30	12	70	30	82¼	102	2 to 1	2 Pc.
60	66	51	.109*	.105*	18	33	12	77	—	—	114	1½ to 1	3 Pc.
66	73	55	.109*	.105*	18	36	12	77	—	—	126	1½ to 1	3 Pc.
72	81	59	.109*	.105*	18	39	12	77	—	—	138	2 to 1	3 Pc.
78	87	63	.109*	.105*	22	38	12	77	—	—	148	1½ to 1	3 Pc.
84	95	67	.109*	.105*	22	34	12	77	—	—	162	1½ to 1	3 Pc.
90	103	71	.109*	.105*	22	38	12	77	—	—	174	1½ to 1	3 Pc.
96	112	75	.109*	.105*	24	40	12	77	—	—	174	1½ to 1	3 Pc.

NOTE: ALL SPLICES TO BE LAP RIVETED OR BOLTED.

* EXCEPT CENTER PANEL SEE GENERAL NOTES

REINFORCED CONCRETE PIPE ARCH									
EQUIV. DIA. (Inches)	DIMENSIONS (Inches)								APPROX. SLOPE
	** SPAN	** RISE	T	A	B	C	D	E	
24	29	18	3	8½	39	33	72	48	3 to 1
30	36	22	3½	9½	50	46	96	60	3 to 1
36	44	27	4	11⅛	60	36	96	72	3 to 1
42	51	31	4½	15 13/16	60	36	96	78	3 to 1
48	58	36	5	21	60	36	96	84	3 to 1
54	65	40	5½	25½	60	36	96	90	3 to 1
60	73	45	6	31	60	36	96	96	3 to 1
72	88	54	7	31	60	39	99	120	2 to 1
84	102	62	8	28½	83	19	102	144	2 to 1

REINFORCED CONCRETE ELLIPTICAL PIPE									
EQUIV. DIA. (Inches)	DIMENSIONS (Inches)								APPROX. SLOPE
	** SPAN	** RISE	T	A	B	C	D	E	
24	30	19	3¼	8½	39	33	72	48	3 to 1
30	38	24	3¾	9½	54	18	72	60	3 to 1
36	45	29	4½	11⅛	60	24	84	72	2½ to 1
42	53	34	5	15¾	60	36	96	78	2½ to 1
48	60	38	5½	21	60	36	96	84	2½ to 1
54	68	43	6	25½	60	36	96	90	2½ to 1
60	76	48	6½	30	60	36	96	96	2½ to 1

**NOMINAL SIZE

GENERAL NOTES

DETAILS OF CONSTRUCTION, MATERIALS AND WORKMANSHIP NOT SHOWN ON THIS DRAWING SHALL CONFORM TO THE PERTINENT REQUIREMENTS OF THE STANDARD SPECIFICATIONS AND THE APPLICABLE SPECIAL PROVISIONS.

CONCRETE APRON ENDWALLS MAY NOT BE USED WITH GALVANIZED STEEL OR ALUMINUM CULVERT PIPE OR VISE VERSA. GALVANIZED STEEL OR ALUMINUM APRON ENDWALLS SHALL NORMALLY BE INSTALLED ON CULVERT PIPE OF THE SAME METAL.

ALL THREE PIECE STEEL APRON ENDWALLS FOR 66" X 51" PIPE ARCH AND LARGER SHALL HAVE 0.109" SIDES AND 0.138" CENTER PANELS. ALL THREE PIECE ALUMINUM APRON ENDWALLS FOR 66" X 51" PIPE ARCH AND LARGER SHALL HAVE 0.105" SIDES AND 0.134" CENTER PANELS. THE WIDTH OF CENTER PANELS SHALL BE GREATER THAN 20 PERCENT OF THE PIPE ARCH PERIMETER.

LAP SEAMS SHALL BE TIGHTLY JOINED BY GALVANIZED RIVETS OR BOLTS FOR STEEL UNITS AND ALUMINUM RIVETS AND BOLTS FOR ALUMINUM UNITS. FOR THE 77" X 52" THROUGH 112" X 75" APRON ENDWALL SIZES, THE REINFORCED EDGES AND CENTER PANEL SEAMS SHALL BE FURTHER REINFORCED WITH GALVANIZED STEEL OR ALUMINUM STIFFENER ANGLES. THE ANGLES SHALL BE ATTACHED BY GALVANIZED NUTS AND BOLTS FOR STEEL UNITS AND ALUMINUM NUTS AND BOLTS FOR ALUMINUM UNITS.

WHERE TWO OR MORE PIPES WITH APRON ENDWALLS ARE LAID ADJACENT TO EACH OTHER, THEY SHALL BE SEPARATED BY A DISTANCE SUFFICIENT TO PROVIDE A MINIMUM CLEARANCE OF 6 INCHES BETWEEN APRON ENDWALLS.

① FOR PIPE ARCH SIZES UP TO 73" X 55" A 180° ROLLED EDGE MAY BE USED INSTEAD OF STEEL ROD REINFORCEMENT. SEE SECTION A-A.

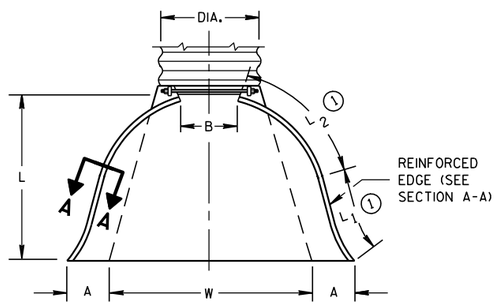

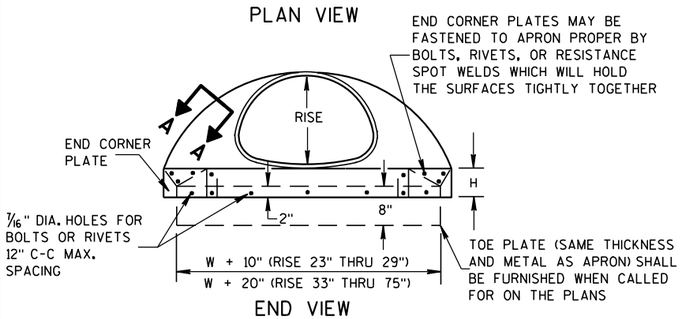

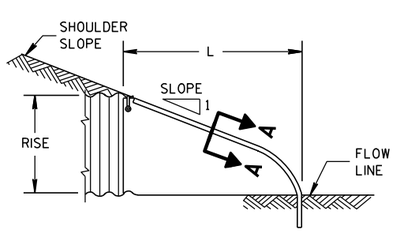

SIDE ELEVATION

METAL ENDWALLS

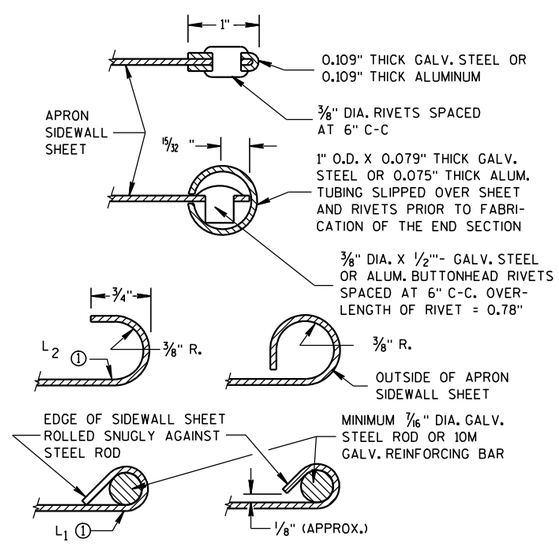

SECTION A-A

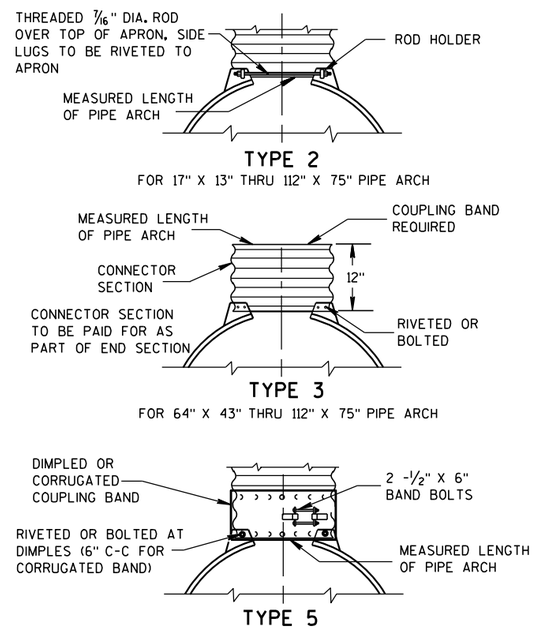

NOTE: DIMPLED BAND FITS OVER OUTSIDE OF ENDWALL, AND CORRUGATED BAND FITS INSIDE ENDWALL.

CONNECTION DETAILS

APRON ENDWALLS FOR PIPE ARCH AND ELLIPTICAL PIPE

STATE OF WISCONSIN
DEPARTMENT OF TRANSPORTATION

APPROVED

11/30/94 — DATE

/S/ Rory L. Rhinesmith — CHIEF ROADWAY DEVELOPMENT ENGINEER

FHWA

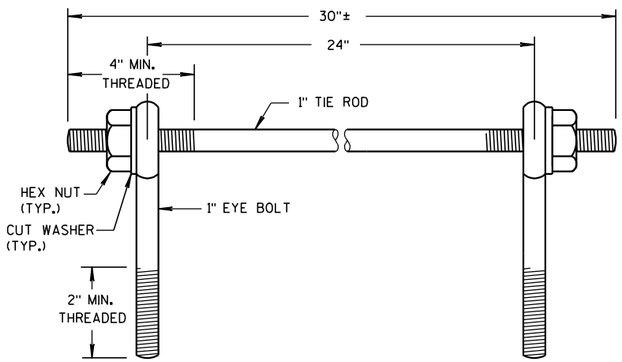

EYE BOLTS AND TIE ROD

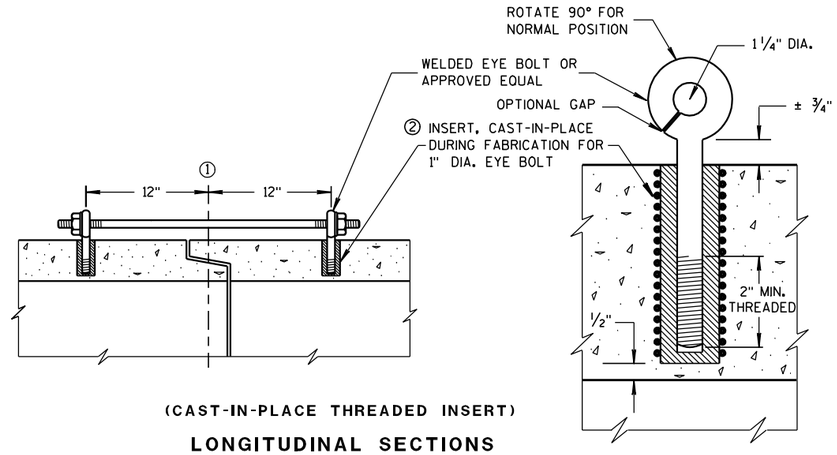

(CAST-IN-PLACE THREADED INSERT)

LONGITUDINAL SECTIONS

EYE BOLT AND TIE ROD ASSEMBLY (ALTERNATE NO. 1)

GENERAL NOTES

DETAILS OF CONSTRUCTION, MATERIALS, AND WORKMANSHIP NOT SHOWN ON THIS DRAWING SHALL CONFORM TO THE PERTINENT REQUIREMENTS OF THE STANDARD SPECIFICATIONS AND APPLICABLE SPECIAL PROVISIONS.

CONCRETE CULVERT AND STORM SEWER PIPE SHALL BE TIED TOGETHER IN THE MANNER ILLUSTRATED BY THIS DETAIL AT LOCATIONS DESIGNATED IN THE STANDARD SPECIFICATIONS AND THE PLAN. THE CONTRACTOR MAY USE EITHER ALTERNATE 1, 2 OR 3 FOR DRAINAGE STRUCTURES. ONLY ALTERNATE 1 AND 3 MAY BE USED FOR CATTLE PASSES, UNLESS OTHERWISE STATED IN THE CONTRACT. THE MATERIALS, FABRICATION AND WORK NECESSARY TO TIE THE PIPE BY THIS DETAIL WILL BE CONSIDERED INCIDENTAL TO THE PIPE AND APRON ENDWALLS IF REQUIRED.

DETAILED DRAWINGS FOR PROPOSED ALTERNATE DESIGNS FOR JOINT TIES SHALL BE SUBMITTED TO THE ENGINEER FOR APPROVAL.

JOINT TIES TO BE HOT-DIP GALVANIZED PER ASTM A 153.

① ℄ OF TONGUE AND GROOVE OR BELL AND SPIGOT JOINTS.

② THE INSIDE OF THE THREADED INSERTS SHALL BE CLEAN TO ALLOW THE INSERTION OF THREADED EYE BOLTS.

③ HOLES SHALL BE CAST-IN-PLACE OR DRILLED 12 INCHES FROM ℄ OF TONGUE AND GROOVE.

④ BOLT PROJECTION INSIDE OF PIPE SHALL NOT EXCEED 2 INCHES.

⑤ OPENING TO BE ROD DIAMETER PLUS 1 INCH.

⑥ LENGTH ADEQUATE TO EXTEND TO WITHIN 1/2 INCH OF THE INNER SURFACE OF THE PIPE.

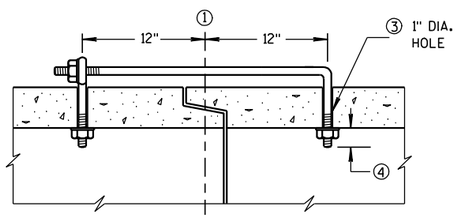

(TONGUE & GROOVE PIPE)

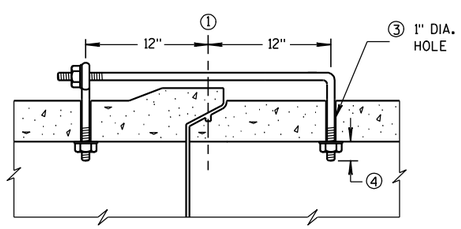

(MODIFIED BELL PIPE)

LONGITUDINAL SECTION

EYE BOLT DIMENSION TABLE

PIPE SIZE	L = LENGTH	
	TONGUE & GROOVE PIPE	MODIFIED BELL PIPE
18" TO 24"	4 1/2"	6 1/4"
30"	5"	7"
36"	5 1/2"	7"
42"	6"	
48"	6 1/2"	
60"	7 1/2"	
66"	8"	

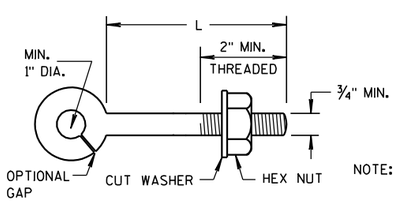

EYE BOLT

NOTE:

NOTE: TWO EYE BOLTS MAY BE USED WITH A 30" LONG THREADED ROD IN LIEU OF THE 90° BENT TIE ROD.

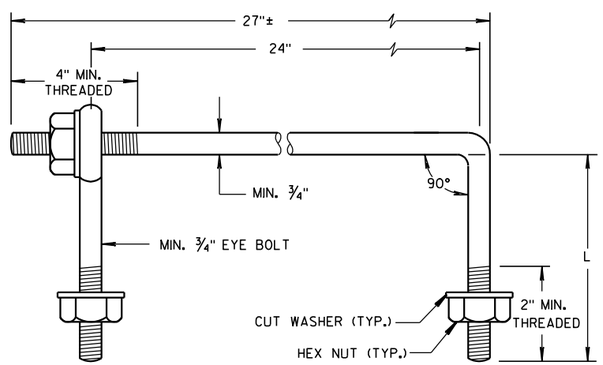

EYE BOLT AND TIE ROD

(JOINT TIES FOR 18" TO 66" DIA. CONCRETE PIPE)

EYE BOLT AND TIE ROD ASSEMBLY (ALTERNATE NO. 2)

ADJUSTABLE TIE ROD TABLE

PIPE DIAMETER	TIE ROD DIAMETER	D	L_1	N
12-60	5/8	5/8	5	1/2
66-84	3/4	3/4	5	1/2
90-108	1	1	7	1 7/16

DIMENSIONS SHOWN ARE IN INCHES

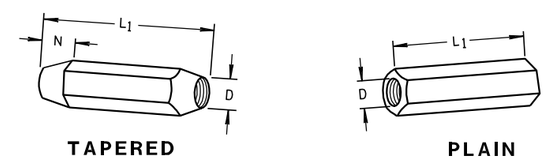

TAPERED PLAIN

RIGHT AND LEFT THREADS

SLEEVE NUTS

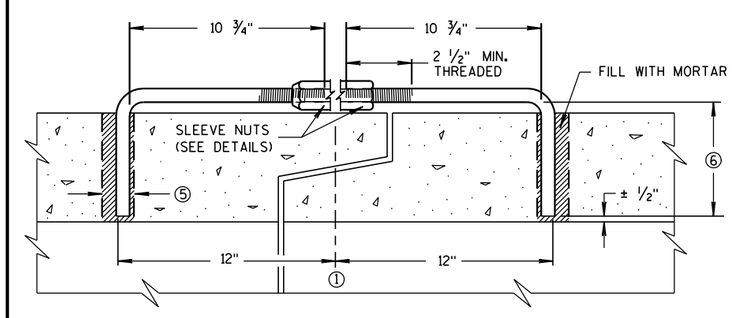

LONGITUDINAL SECTION

(JOINT TIES FOR 12" TO 108" DIA. CONCRETE PIPE)

ADJUSTABLE TIE ROD (ALTERNATE NO. 3)

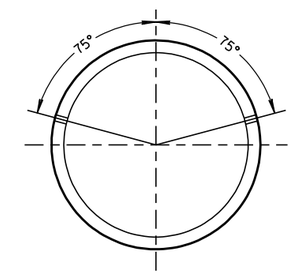

PLACEMENT OF (2) CAST-IN-PLACE INSERTS OR HOLES DURING FABRICATION FOR PIPE SECTIONS REQUIRING TIE RODS

TRANSVERSE SECTION

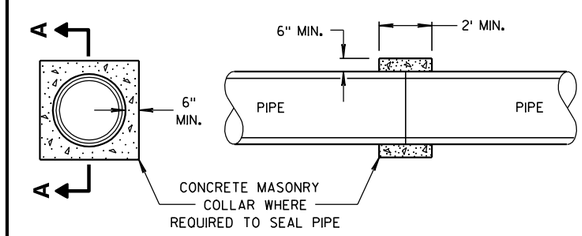

SECTION A-A

CONCRETE COLLAR DETAIL

JOINT TIES FOR CONCRETE PIPE AND CONCRETE COLLAR DETAIL

STATE OF WISCONSIN
DEPARTMENT OF TRANSPORTATION

APPROVED
6/5/2012 /S/ Jerry H. Zogg
DATE ROADWAY STANDARDS DEVELOPMENT ENGINEER
FHWA

6

6

S.D.D. 8 F 4-7

S.D.D. 8 F 4-7

GENERAL NOTES

DETAILS OF CONSTRUCTION, MATERIALS AND WORKMANSHIP NOT SHOWN ON THIS DRAWING SHALL CONFORM TO THE STANDARD SPECIFICATIONS AND THE APPLICABLE SPECIAL PROVISIONS.

THE SHAPED SUBGRADE WITH GRANULAR FOUNDATION IS AN EQUAL ALTERNATE TO THE GRANULAR FOUNDATION EXCEPT WHERE ROCK IS ENCOUNTERED.

① WHERE ROCK, HARD PAN OR FRAGMENTED MATERIAL IS ENCOUNTERED, THE TRENCH SHALL BE EXCAVATED BELOW THE BOTTOM OF THE PIPE AN AMOUNT EQUAL TO ½ INCH PER FOOT OF PROPOSED EMBANKMENT ABOVE THE TOP OF THE PIPE, BUT NOT LESS THAN 6 INCHES.

② TRENCH SHALL BE BACKFILLED AS REQUIRED BY STANDARD SPECIFICATIONS; SECTION 520 FOR PIPE CULVERTS AND SECTION 607 FOR STORM SEWERS.

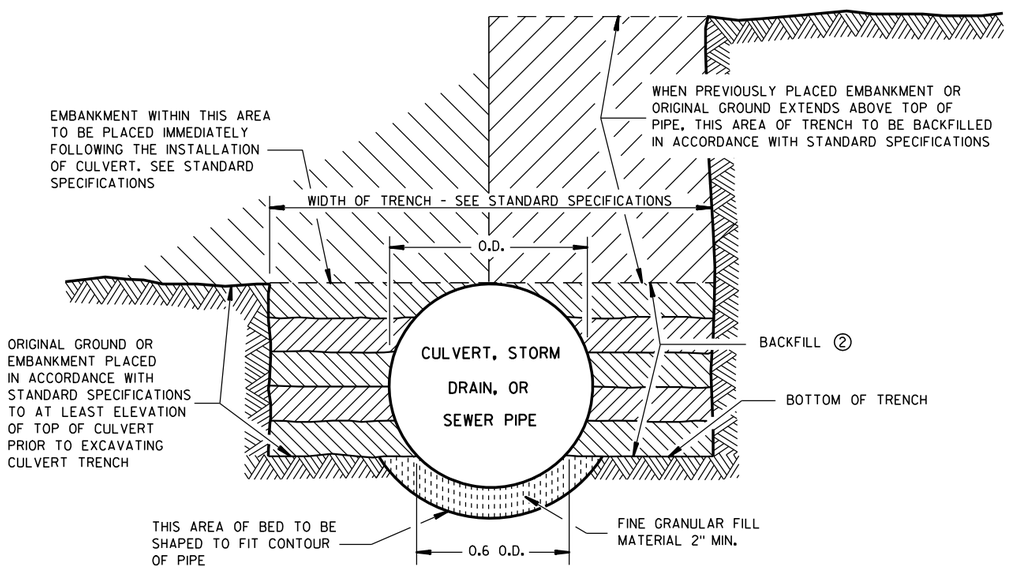

SHAPED SUBGRADE WITH GRANULAR FOUNDATION

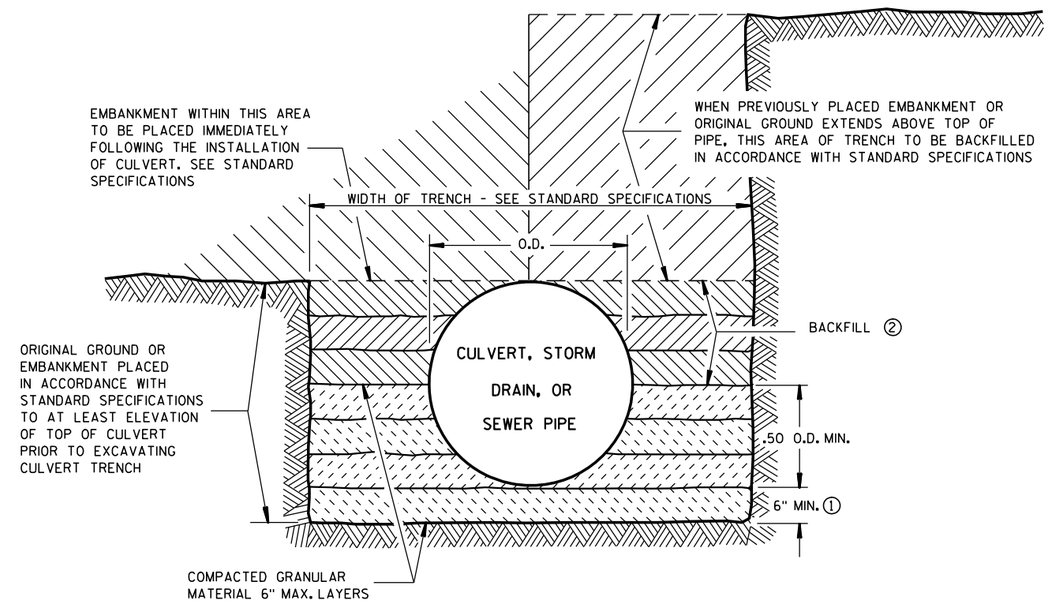

GRANULAR FOUNDATION

CLASS "B" BEDDING

CLASS "B" BEDDING FOR CULVERT PIPE OR STORM SEWER	
STATE OF WISCONSIN DEPARTMENT OF TRANSPORTATION	
APPROVED	
4/7/83 DATE	/S/ D. L. Str--- STATE DESIGN ENGINE HWYS
FHWA	

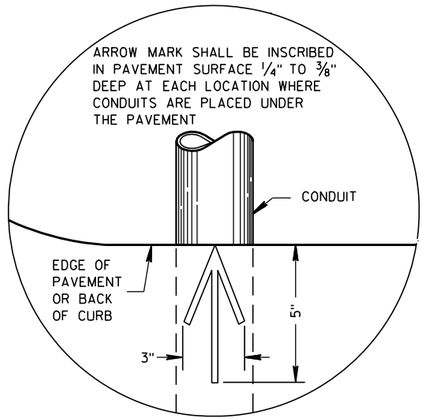

PLAN VIEW

ARROW MARK

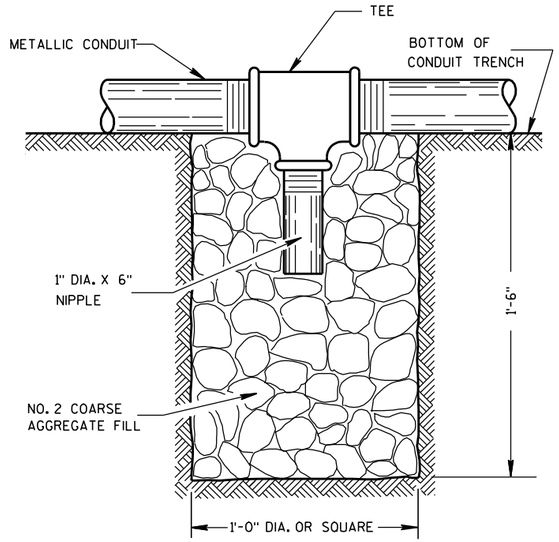

NOTE: INSTALL AT LOCATIONS WHERE METALLIC CONDUITS CANNOT BE PITCHED TO DRAIN INTO A PULL BOX.

DRAIN SUMP FOR METALLIC CONDUIT

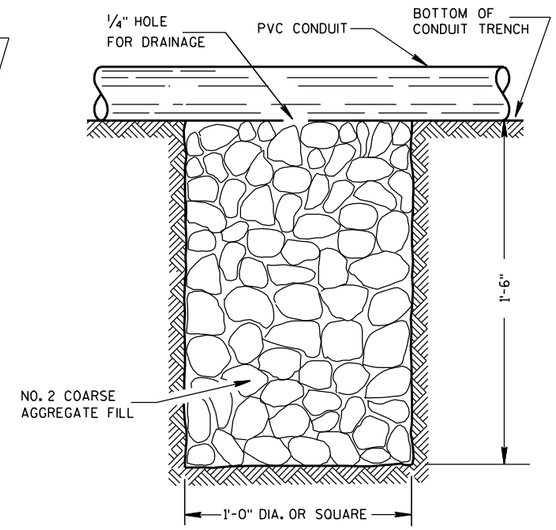

NOTE: INSTALL AT LOCATIONS WHERE PVC CONDUITS CANNOT BE PITCHED TO DRAIN INTO A PULL BOX.

DRAIN SUMP FOR PVC CONDUIT

GENERAL NOTES

DETAILS OF CONSTRUCTION, MATERIALS AND WORKMANSHIP NOT SHOWN ON THIS DRAWING SHALL CONFORM TO THE PERTINENT REQUIREMENTS OF THE CONTRACT.

METALLIC (STANDARD SPECIFICATION 652.2.2) OR NONMETALLIC (STANDARD SPECIFICATION 652.2.3) CONDUIT SHALL BE FURNISHED AND PLACED AS SHOWN.

DEPTH OF CONDUIT INSTALLED BELOW THE TRAVELED WAY SHALL BE 24 INCHES MINIMUM AND 36 INCHES MAXIMUM.

DEPTH OF CONDUIT INSTALLED THAT IS NOT BELOW THE TRAVELED WAY SHALL BE 18 INCHES MINIMUM AND 36 INCHES MAXIMUM.

ANY EXCEPTION TO THE MAXIMUM DEPTH SHALL BE ONLY WITH THE WRITTEN APPROVAL OF THE ENGINEER.

THE TRENCH SHALL NOT BE BACKFILLED PRIOR TO INSPECTION OF THE CONDUIT.

ALL METALLIC CONDUIT RACEWAY ENDS SHALL BE REAMED AND THREADED.

ALL METALLIC CONDUIT IN WHICH WIRE OR CABLE IS TO BE INSTALLED SHALL BE BUSHED WITH APPROVED THREADED BUSHINGS BEFORE INSTALLATION OF THE WIRE OR CABLE.

ALL METALLIC CONDUITS IN WHICH WIRE OR CABLE IS NOT TO BE INSTALLED SHALL BE CAPPED WITH THREADED PROTECTIVE CAPS, AS APPROVED BY THE ENGINEER.

ALL NONMETALLIC CONDUIT SHALL BE CAPPED OR PLUGGED IMMEDIATELY AFTER INSTALLATION AND SHALL REMAIN CAPPED OR PLUGGED UNTIL WIRE/CABLES ARE INSTALLED.

NONMETALLIC CONDUITS IN WHICH WIRE OR CABLE IS NOT BEING INSTALLED SHALL REMAIN CAPPED OR PLUGGED.

BENDING OF PVC ELECTRICAL CONDUIT SHALL BE ACCOMPLISHED BY USING A BLANKET OR EMERSION TYPE TANK DESIGNED FOR THE PURPOSE OF BENDING PVC ELECTRICAL CONDUIT.

ALL CUT ENDS SHALL BE TRIMMED INSIDE AND OUTSIDE TO REMOVE ALL ROUGH EDGES ON NONMETALLIC CONDUIT. (SEE NEC 347.5)

WHEN REQUIRED TO CONNECT NONMETALLIC CONDUIT TO METALLIC CONDUIT, ONLY U.L. LISTED ADAPTER FITTINGS SHALL BE USED.

PRIOR TO CONDUIT ACCEPTANCE, CONDUIT CAPS OR PLUGS SHALL BE REMOVED, AND THE CAPS, PLUGS AND CONDUIT ENDS SHALL BE THOROUGHLY CLEANED AND THEN THE CAPS OR PLUGS REINSTALLED TO ENSURE THAT THE CAPS OR PLUGS CAN BE EASILY REMOVED IN THE FUTURE.

ALL CONDUIT BEING FURNISHED AND INSTALLED SHALL HAVE THE U.L. LABEL FIRMLY ATTACHED.

CONDUIT RUNS SHALL BE THE SAME SIZE OF CONDUIT FROM ONE END TO THE OTHER (FROM PULL BOX TO PULL BOX-OR-JUNCTION BOX TO JUNCTION BOX-OR-BASE TO BASE, ETC.).

POLY ROPE OR A PULL WIRE SHALL BE INSTALLED AS STATED IN THE STANDARD SPECIFICATION, ITEM 652.3.1.1.

ALL CONDUIT RUNS SHALL BE STRAIGHT (WITHOUT BENDS) FROM PULL BOX TO PULL BOX, PULL BOX TO BASE AND BASE TO BASE AS SHOWN ON THE PLANS.

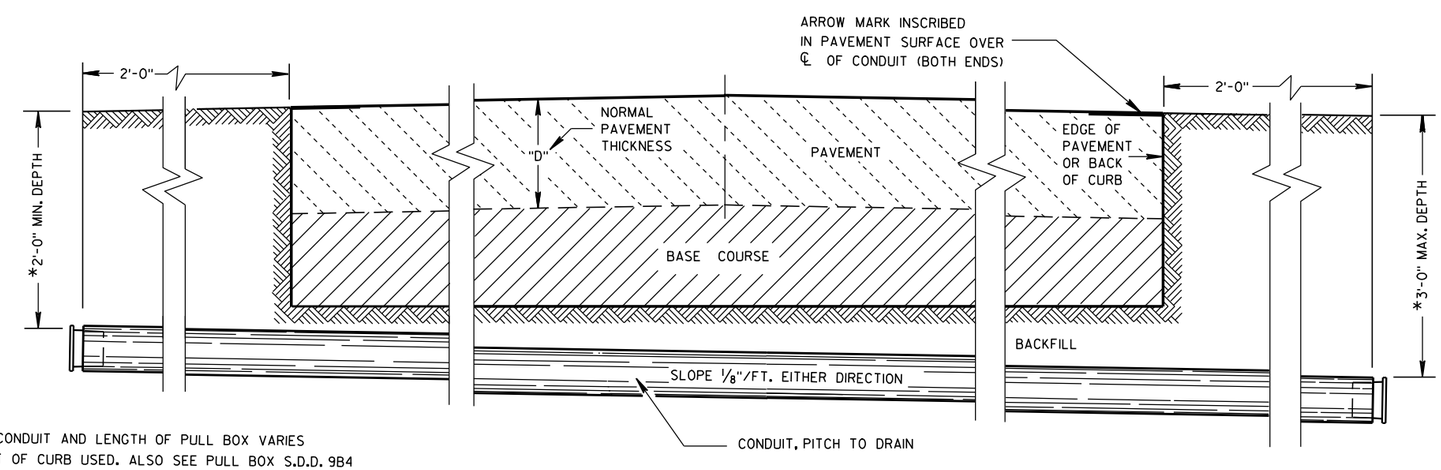

*DEPTH OF CONDUIT AND LENGTH OF PULL BOX VARIES WITH HEIGHT OF CURB USED. ALSO SEE PULL BOX S.D.D. 9B4

SIDE ELEVATION

DETAIL FOR CONDUIT UNDER PAVED HIGHWAYS

CONDUIT

STATE OF WISCONSIN
DEPARTMENT OF TRANSPORTATION

APPROVED

10/23/03 — DATE

/S/ Balu Ananthanarayanan — STATE ELECTRICAL ENGI 157 HWYS

FHWA

6

S.D.D. 9 B 2-7

6

S.D.D. 9 B 2-7

TABLE OF NOMINAL DIMENSIONS AND WEIGHTS

DIMENSION IN INCHES		CORRUGATED STEEL PIPE								
PIPE DIAMETER (INSIDE)	A	12	12	12	18	18	18	24	24	24
PIPE LENGTH **	B	24	30	36	24	30	36	36	42	48
WALL THICKNESS	C	0.064	0.064	0.064	0.064	0.064	0.064	0.064	0.064	0.064
COVER	D	10 1/4	10 1/4	10 1/4	16 1/4	16 1/4	16 1/4	22 1/4	22 1/4	22 1/4
FRAME	E	14 1/2	14 1/2	14 1/2	20 1/2	20 1/2	20 1/2	26 1/2	26 1/2	26 1/2
FRAME	F	8 1/2	8 1/2	8 1/2	14 1/2	14 1/2	14 1/2	20 1/2	20 1/2	20 1/2
FRAME	G	11 1/2	11 1/2	11 1/2	17 1/2	17 1/2	17 1/2	23 1/2	23 1/2	23 1/2
WEIGHT IN POUNDS *										
FRAME AND COVER		60	60	60	110	110	110	155	155	155

* THE ACTUAL WEIGHT OF THE MANHOLE FRAME AND COVER MAY VARY WITHIN 5 PERCENT PLUS OR MINUS OF THE WEIGHTS SHOWN.

** NORMALLY USED LENGTHS. THE PROJECT ENGINEER SHALL DETERMINE IF PIPE LENGTHS, OTHER THAN THOSE SPECIFIED, SHALL BE USED, TO A MAXIMUM OF 48" (CONTINUOUS LENGTH, NON-SPLICED). THE ADDITIONAL LENGTH SHALL BE INCIDENTAL TO THE PULL BOX BID PRICE.

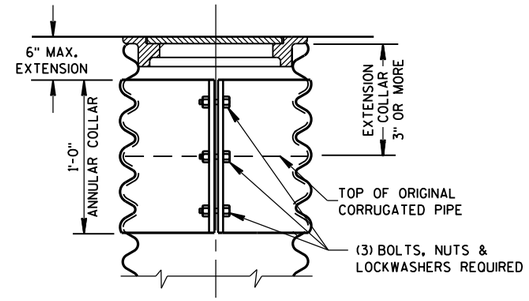

CORRUGATED PIPE EXTENDER

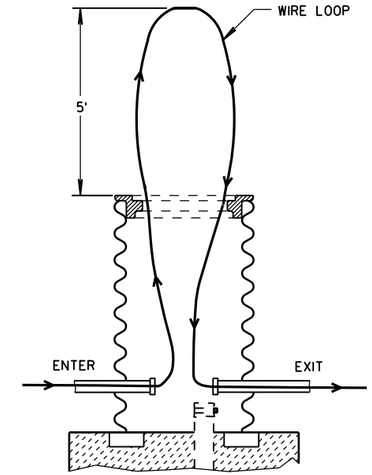

MEASUREMENT DETAIL FOR WIRE/CABLE IN THE PULL BOX

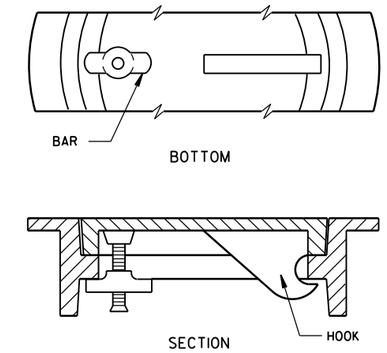

ALTERNATE COVER (LOCKING)

TIGHTENING BAR TYPE

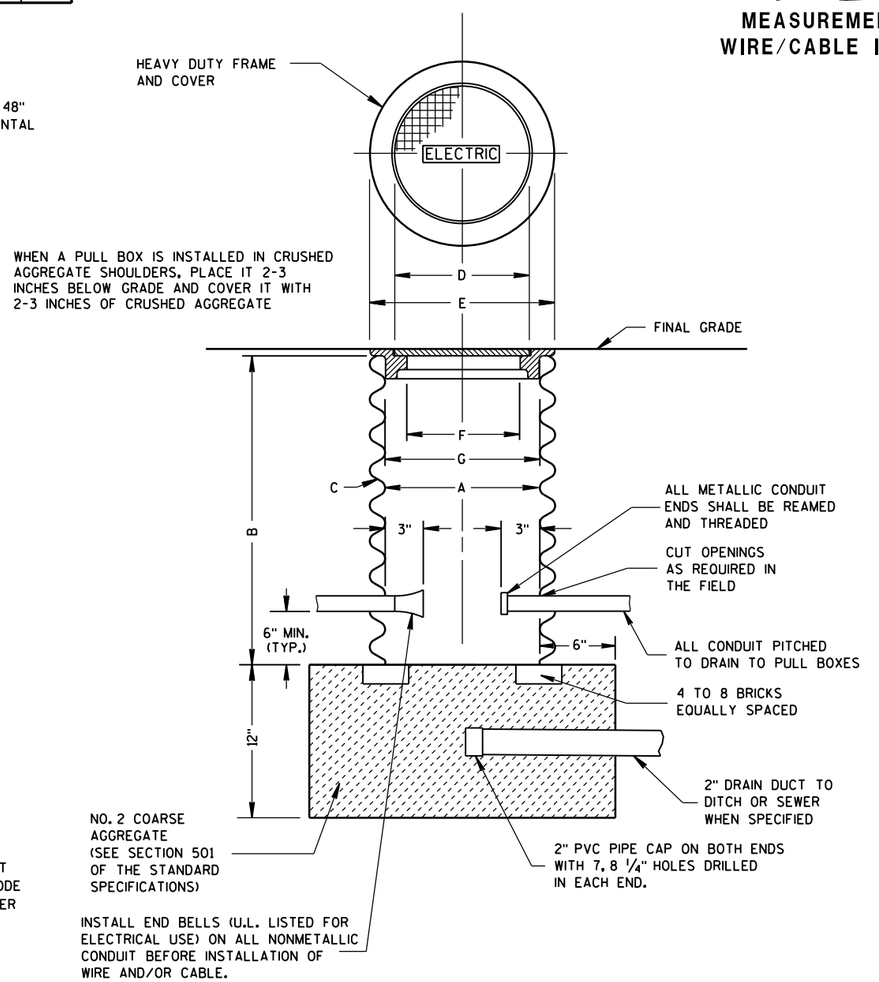

PULL BOX

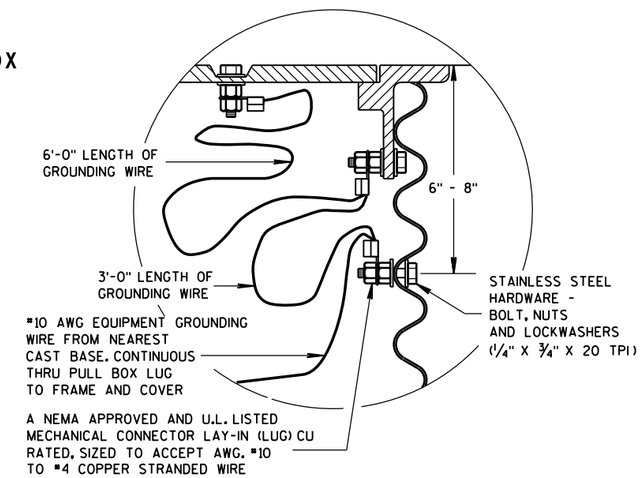

EQUIPMENT GROUNDING LUG AND LOCATION IN STEEL PULL BOXES

GENERAL NOTES

DETAILS OF CONSTRUCTION, MATERIALS AND WORKMANSHIP NOT SHOWN ON THIS DRAWING SHALL CONFORM TO THE PERTINENT REQUIREMENTS OF THE CONTRACT.

ALL FRAMES AND COVERS SHALL BE HEAVY DUTY TYPE, SUITABLE FOR VEHICULAR TRAFFIC LOADS.

PULL BOXES LOCATED IN THE ROADWAYS SHALL HAVE LOCKING COVERS.

ENTRANCE HOLES INTO PULL BOXES SHALL BE CUT WITH A CIRCULAR HOLE SAW OR HYDRAULIC CONDUIT PUNCH. HOLE SIZE SHALL BE THE OUTSIDE DIAMETER OF THE CONDUIT THAT IS TO FIT IN THE OPENING PLUS NO MORE THAN 1/4".

THE CONTRACTOR SHALL NOT INSTALL WIRE IN ANY PULL BOX UNTIL ITS INSTALLATION HAS BEEN INSPECTED AND ACCEPTED BY THE ENGINEER.

GROUNDING LUGS (MECHANICAL CONNECTORS) SHALL BE U.L. LISTED AND APPROVED FOR USE WITH COPPER WIRE.

GROUNDING LUGS ARE NOT REQUIRED IN PULL BOXES WHEN VOLTAGES OF LESS THAN 50 VOLTS AC ARE THE ONLY VOLTAGES ENCOUNTERED IN THE BOXES.

ALL METALLIC CONDUIT IN WHICH WIRE AND/OR CABLE IS TO BE INSTALLED, SHALL BE BUSHED BEFORE INSTALLATION OF THE WIRE AND/OR CABLE.

S.D.D. 9B2, "CONDUIT", APPLIES TO THIS DRAWING.

WHEN PULL BOXES ARE INSTALLED FOR FUTURE USE, DO NOT INSTALL THE EQUIPMENT GROUNDING LUG. THE EQUIPMENT GROUNDING LUG, THE EQUIPMENT GROUNDING ELECTRODE AND THE EQUIPMENT GROUNDING CONDUCTOR SHALL BE REQUIRED AND INSTALLED UNDER A FUTURE WIRING CONTRACT.

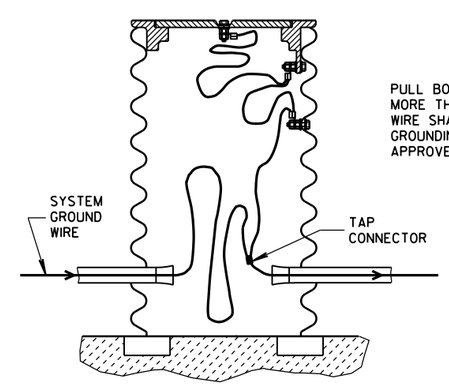

EQUIPMENT GROUNDING LUG AND LOCATION IN STEEL PULL BOXES

PULL BOX

STATE OF WISCONSIN
DEPARTMENT OF TRANSPORTATION

APPROVED
2-7-2013 — DATE
/S/ Ahmet Demirbilek — STATE ELECTRICAL
FHWA

6

S.D.D. 9 B 4-10

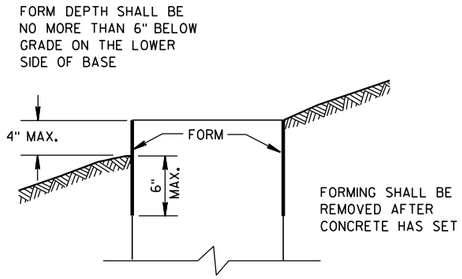

FORMING DETAIL

QUANTITY REQUIREMENTS	CONCRETE BASE TYPE		
	1	2	5
APPROX. CUBIC YARDS OF CONCRETE	0.40	0.57	0.40
LBS. OF HOOP BAR STEEL	NONE	23	16
LBS. OF VERTICAL BAR STEEL	NONE	60	18

GENERAL NOTES

DETAILS OF CONSTRUCTION, MATERIALS AND WORKMANSHIP NOT SHOWN ON THIS DRAWING SHALL CONFORM TO THE PERTINENT REQUIREMENTS OF THE CONTRACT.

BASES SHALL BE EXCAVATED BY USE OF A CIRCULAR AUGER.

TOP SURFACES OF CONCRETE BASES SHALL BE TROWEL FINISHED SMOOTH AND LEVEL.

CONDUIT SIZES AND LOCATIONS SHALL BE AS SHOWN ON THE PLANS.

THE FINAL OR TERMINATING CONCRETE BASE IN A CONDUIT RUN SHALL HAVE A 6" EXIT STUB INSTALLED FOR FUTURE CABLING USE. THE EXIT STUB SHALL BE SIZED AS USED THROUGHOUT THE CONDUIT RUN AS SHOWN AT THE ENTRANCE OF THE BASE.

MINIMUM BENDING RADIUS OF CONDUIT IS EQUAL TO 6 X THE DIAMETER.

CONDUIT HEIGHT ABOVE CONCRETE BASES SHALL BE 1 INCH. ALL METALLIC CONDUIT ENDS SHALL BE REAMED AND THREADED.

ALL CONDUIT ENDS AT THE TOP OF CONCRETE BASES SHALL BE CAPPED IF METALLIC OR PLUGGED IF NONMETALLIC IMMEDIATELY AFTER PLACEMENT AND BEFORE CONCRETE IS POURED. CONDUITS IN WHICH WIRE OR CABLE IS NOT INSTALLED SHALL REMAIN CAPPED OR PLUGGED.

GENERAL NOTES (CONTINUED)

BELL ENDS SHALL BE INSTALLED ON ALL PVC CONDUIT EXPOSED AT THE TOP OF CONCRETE BASES BEFORE INSTALLATION OF CABLE OR WIRE.

ENDS OF CONDUIT INSTALLED BELOW GRADE FOR FUTURE USE SHALL BE CAPPED IF METALLIC OR PLUGGED IF NONMETALLIC.

WHEN REQUIRED TO CONNECT NONMETALLIC CONDUIT TO METALLIC CONDUIT, ONLY ADAPTER FITTINGS, U.L. LISTED FOR ELECTRICAL USE, SHALL BE USED.

IF A BASE REQUIRES A DEEP FORM BECAUSE OF LOOSE DIRT OR FILL, THE FORM SHALL BE REMOVED BEFORE BACKFILLING AROUND THE BASE. BACKFILL SHALL BE TAMPED TIGHT AGAINST THE BARE CONCRETE BASE IN LAYERS OF 1 FOOT OR LESS.

A NO. 4 AWG, STRANDED COPPER EQUIPMENT GROUNDING CONDUCTOR SHALL BE EXOTHERMICALLY WELDED TO THE EQUIPMENT GROUNDING ELECTRODE (GROUND ROD) FOR TYPE 2 AND TYPE 5 BASES.

THE EQUIPMENT GROUNDING CONDUCTOR SHALL BE FURNISHED AND INSTALLED TO ENTER THE BASE OF THE TYPE 2 AND TYPE 5 BASES THROUGH A 1 INCH CONDUIT INSTALLED FOR GROUNDING PURPOSES, LEAVING A 4 FOOT COIL OF WIRE ABOVE THE CONCRETE BASE. THE EQUIPMENT GROUNDING CONDUCTOR SHALL BE NEATLY COILED AND THE COILS TIED TOGETHER.

ANCHOR RODS SHALL BE THREADED 12" IN LENGTH ON EACH END OF THE ROD. ANCHOR RODS SHALL BE MANUFACTURED IN ACCORDANCE WITH SECTION 654.2.1 AND 641.2.2 OF THE STANDARD SPECIFICATIONS, ASTM A-449, OR ASTM A-687 (GRADE 105).

WASHERS AND LOCK WASHERS ARE REQUIRED ON ALL ANCHOR RODS.

WHEN ANCHOR RODS USING THE ALTERNATE "L" BEND ARE FURNISHED, THE 4" "L" BEND SHALL BE IN ADDITION TO THE SPECIFIED ANCHOR ROD BAR LENGTH. THE "L" BEND END SHALL NOT BE THREADED.

ANCHOR RODS SHALL BE INSTALLED WITH MISALIGNMENTS OF LESS THAN 1:40 FROM VERTICAL.

WELDING OF THE ANCHOR RODS TO THE CAGE IS UNACCEPTABLE. TIE WIRES SHALL BE USED.

BAR STEEL REINFORCEMENT SHALL BE COATED WITH POWDERED EPOXY RESIN IN ACCORDANCE WITH SECTION 505 OF THE STANDARD SPECIFICATIONS (LATEST EDITION).

(1) THE MINIMUM DEPTH OF CONDUIT EXITING THE CONCRETE BASE AND INSTALLED BELOW THE TRAVELED WAY SHALL BE 24 INCHES. THE MINIMUM DEPTH OF CONDUIT EXITING THE CONCRETE BASE THAT IS NOT INSTALLED BELOW THE TRAVELED WAY SHALL BE 18 INCHES. THE MAXIMUM DEPTH OF ALL CONDUIT SHALL BE 36 INCHES EXCEPT WITH WRITTEN APPROVAL BY THE ENGINEER.

(2) (4) 1" DIA. X 3'-6" ANCHOR RODS.

(3) (4) 1" DIA. X 5'-0" ANCHOR RODS.

(4) (6) NO. 6 X 6'-8" BAR STEEL REINFORCEMENT.

(5) (7) NO. 4 X 5'-1" BAR STEEL REINFORCEMENT @ 1'-0" C-C.

(6) (4) 1" DIA. X 3'-6" ANCHOR RODS.

(7) (6) NO.4 X 4'-8" BAR STEEL REINFORCEMENT.

(8) (5) NO. 4 X 5'-1" BAR STEEL REINFORCEMENT @ 1'-0" C-C.

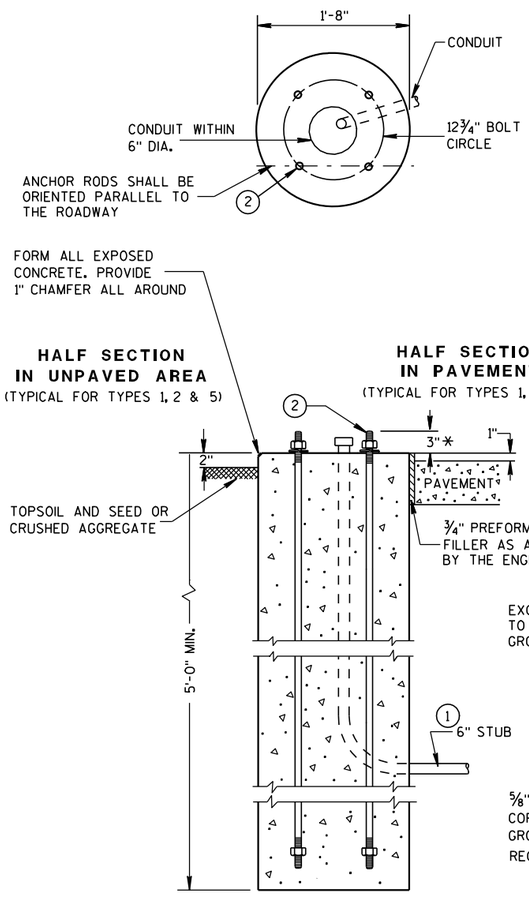

TYPE 1

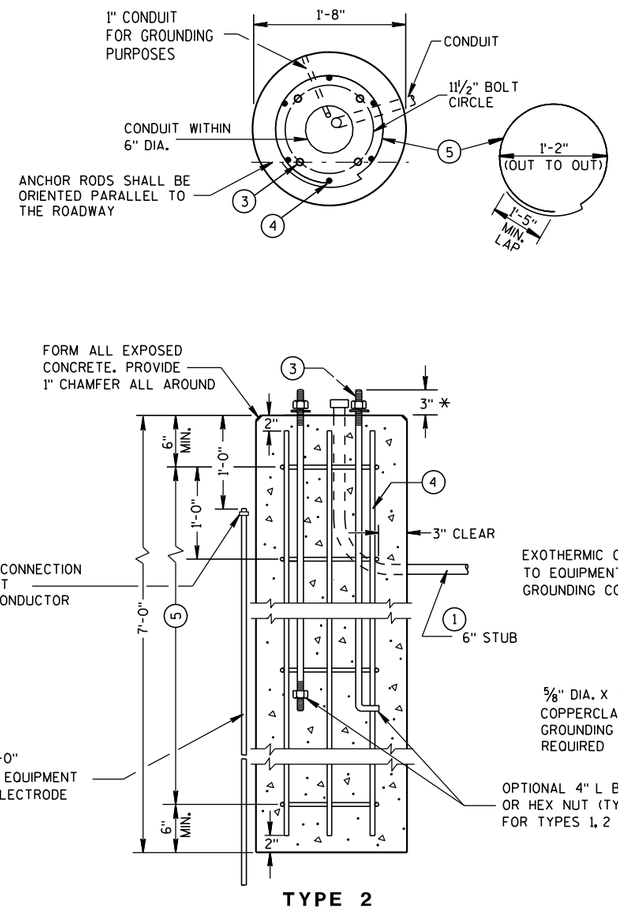

TYPE 2

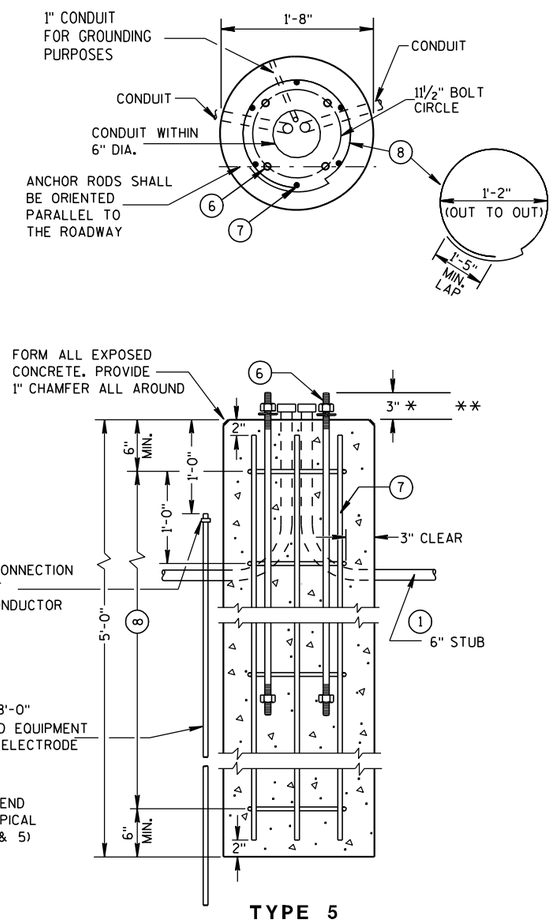

TYPE 5

CONCRETE BASES

* ANY ANCHOR ROD PROJECTION SHORTER THAN 2¾" OR LONGER THAN 3¼" SHALL REQUIRE THE BASE TO BE REMOVED AND REPLACED AT THE CONTRACTORS EXPENSE.

** FOR NONBREAKAWAY INSTALLATIONS, 4½" ± ANCHOR ROD PROJECTION WITH THE USE OF LEVELING NUTS. RODENT SCREEN REQUIRED.

CONCRETE BASES, TYPES 1, 2 & 5

STATE OF WISCONSIN
DEPARTMENT OF TRANSPORTATION

APPROVED
3/3/10 — DATE
/S/ Joanna L. Rush — STATE ELECTRICAL ENGI
HWYS
FHWA

6

S.D.D. 9 C 2-6

GENERAL NOTES

DETAILS OF CONSTRUCTION, MATERIALS AND WORKMANSHIP NOT SHOWN ON THIS DRAWING SHALL CONFORM TO THE PERTINENT REQUIREMENTS OF THE CONTRACT.

FOUR (4) BOLTS SHALL BE FURNISHED WITH EACH TRANSFORMER BASE. BOLTS SHALL BE 1" DIAMETER, 4" IN LENGTH, WITH WASHERS, LOCK WASHERS AND NUTS. BOLTS, NUTS AND WASHERS SHALL BE MANUFACTURED IN ACCORDANCE WITH SECTION 641.2.2 OF THE STANDARD SPECIFICATIONS, ASTM A-325, (92,000 YIELD) HEAVY HEX NUT AND BE GALVANIZED IN ACCORDANCE WITH ASTM A-153, CLASS C.

LEVELING SHIMS, IF NEEDED, SHALL BE DESIGNED FOR THE PURPOSE AND USED UNDER CAST BASES WHEN PLUMBING POLES OR STANDARDS DURING INSTALLATION. THE USE OF WASHERS IN LIEU OF PROPER LEVELING SHIMS IS NOT ACCEPTABLE.

SHIM LENGTH SHALL BE LONG ENOUGH TO COMPLETELY COVER THE AREA UNDER THE LENGTH AND WIDTH OF THE BASE MOUNTING FLANGE.

DOUBLE NUTTING IS NOT ACCEPTABLE FOR LEVELING OR MOUNTING PURPOSES.

A NEMA APPROVED AND U.L. LISTED MECHANICAL CONNECTOR (LUG) AL/CU RATED AND SIZED TO ACCEPT #10 AWG STRANDED WIRE, SHALL BE FURNISHED AND INSTALLED IN THE PEDESTAL AND TRANSFORMER BASES.

THE MECHANICAL CONNECTOR SHALL BE INSTALLED USING A 1/4" - 20 (TPI) STAINLESS STEEL HEX HEAD BOLT OF SUFFICIENT LENGTH TO FIRMLY ATTACH THE LUG TO THE BASE.

SHOULD THE MANNER OF ATTACHMENT OF THE LUG REQUIRE WASHERS, HEX NUTS, LOCK WASHER - THEY SHALL BE STAINLESS STEEL AS IS THE BOLT. THE MANNER OF ATTACHMENT SHALL NOT BLOCK ACCESSIBILITY TO WIRE PLACEMENT IN THE CONNECTOR.

PEDESTAL BASE COLLAR THREADING SHALL BE TAPERED AND IN ACCORDANCE WITH NATIONAL PIPE THREADING DIMENSIONS.

BASE COLLAR THREADING SHALL EXTEND INTO THE BASE COLLAR WITH SUFFICIENT DEPTH TO ACCEPT THE INSTALLATION OF TRAFFIC SIGNAL STANDARDS TO A DEPTH OF 1 1/2", THEN TIGHTENING TO A POINT OF BEING IMMOVABLE.

THE ACCESS DOOR SHALL BE OF THE SAME MATERIAL AS THE BASE.

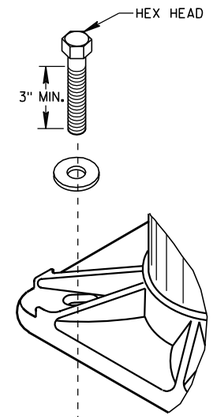

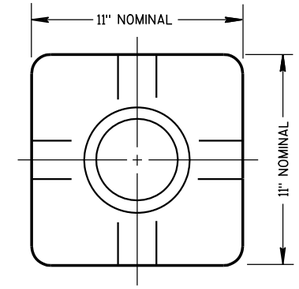

TOP VIEW
(PEDESTAL BASE)

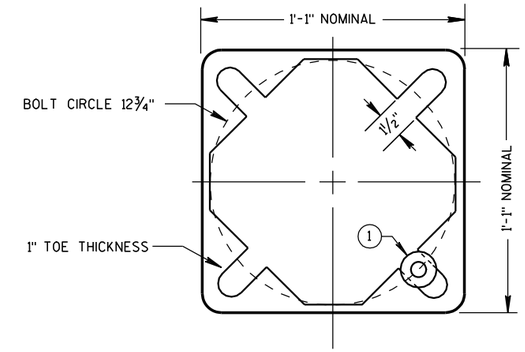

BOTTOM VIEW
(PEDESTAL BASE)

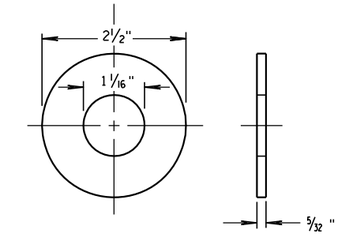

ZINC COATED STEEL WASHER
TO BE PROVIDED BY THE CONTRACTOR

PEDESTAL BASE WASHER (1)

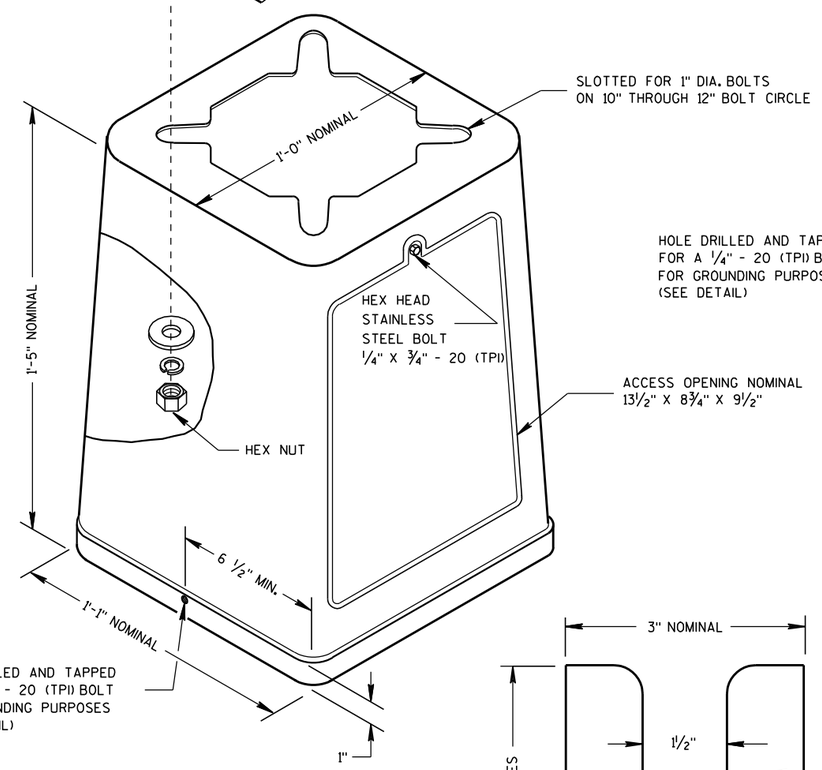

ISOMETRIC VIEW

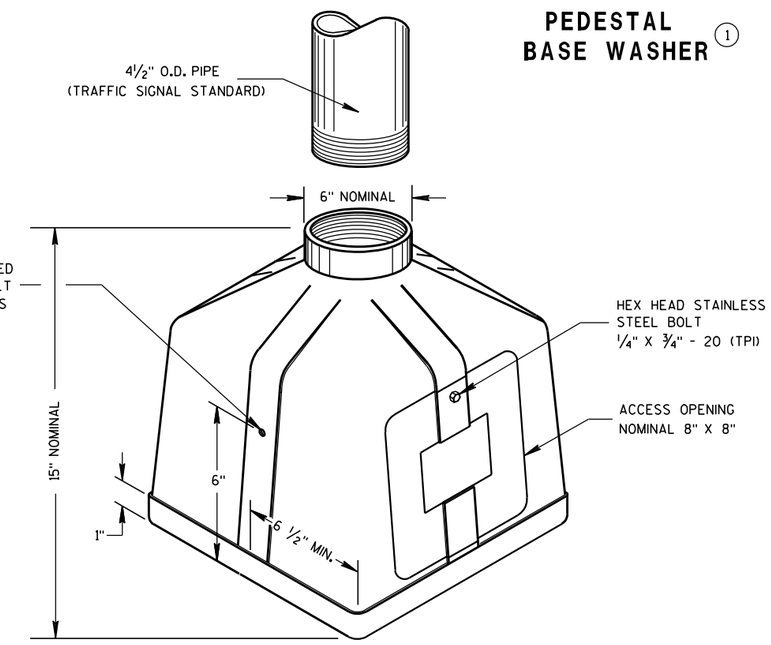

ISOMETRIC VIEW
PEDESTAL BASE

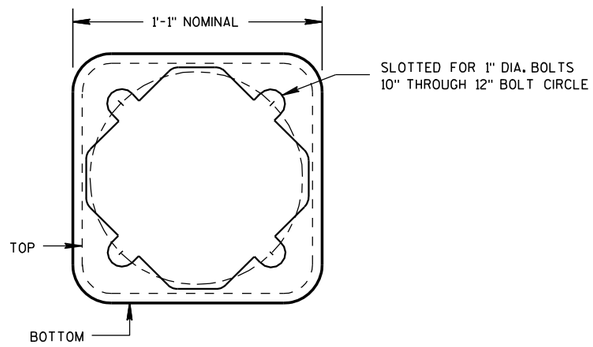

BOTTOM VIEW
(TRANSFORMER BASE)

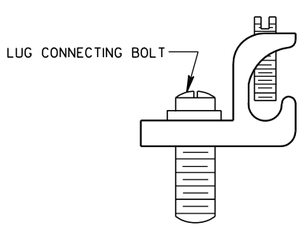

TYPICAL MECHANICAL CONNECTOR LUG

TO BE FURNISHED WITH EACH BASE

TRANSFORMER BASE

INTENDED FOR USE WITH TYPE 2, 3, 4, 5 & 6 POLES

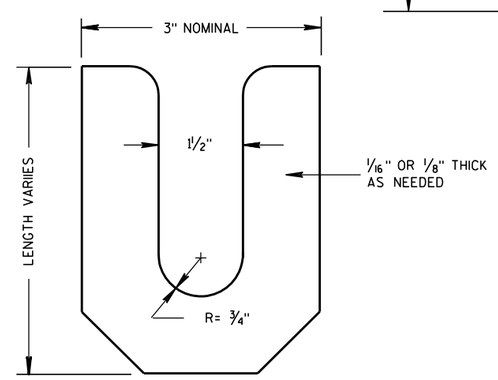

LEVELING SHIM

TRANSFORMER/PEDESTAL BASES	
STATE OF WISCONSIN DEPARTMENT OF TRANSPORTATION	
APPROVED 10/27/09 DATE	/S/ Joanna L. Pruitt STATE ELECTRICAL ENGI 160 HWYS
FHWA	

6

6

S.D.D. 9 C 3-3

S.D.D. 9 C 3-3

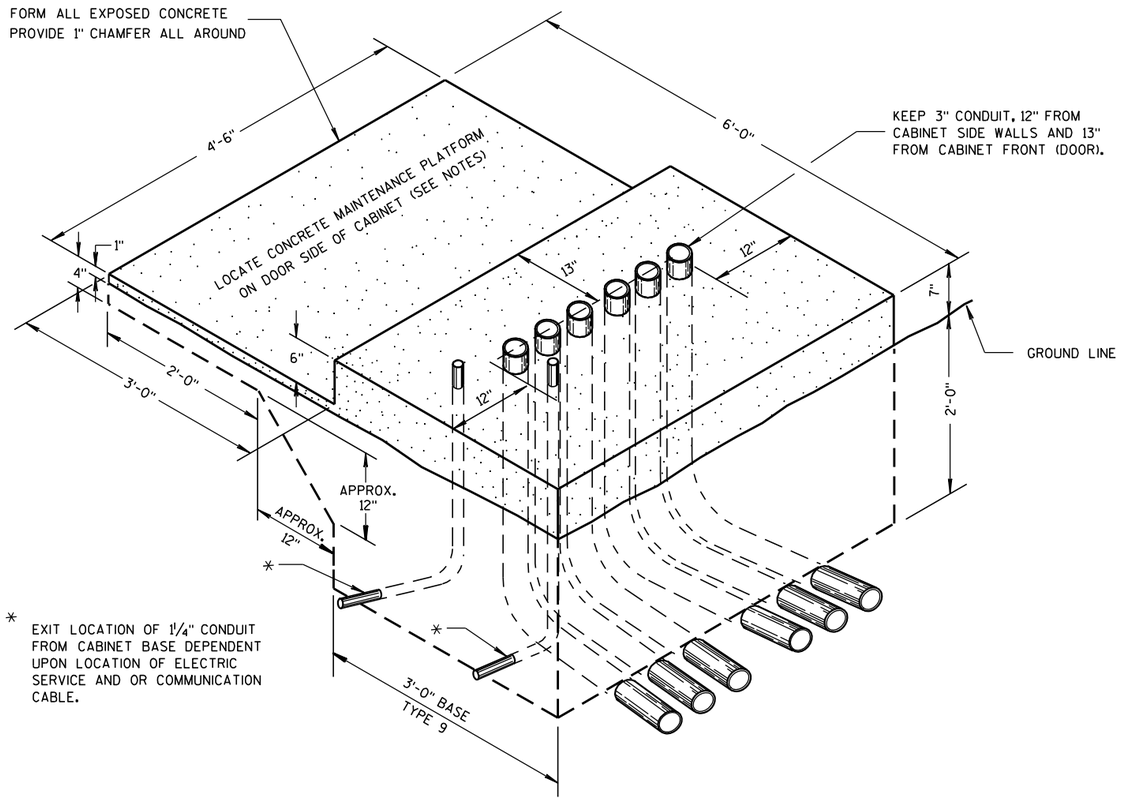

* EXIT LOCATION OF 1¼" CONDUIT FROM CABINET BASE DEPENDENT UPON LOCATION OF ELECTRIC SERVICE AND OR COMMUNICATION CABLE.

ISOMETRIC VIEW

TYPE 9, SPECIAL

(C.Y. CONCRETE = APPROX. 1.56)

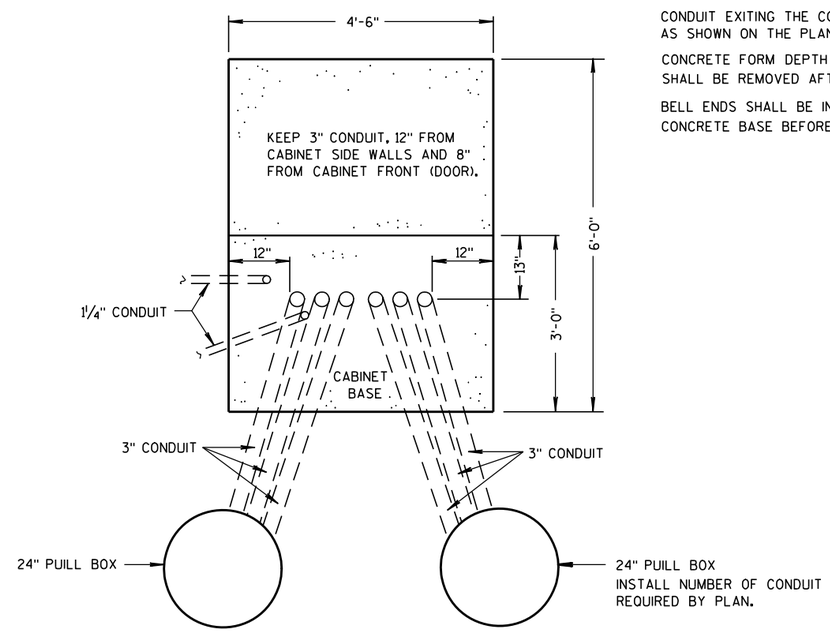

PLAN VIEW

CONCRETE CONTROL CABINET BASE, TYPE 9, SPECIAL

GENERAL NOTES

DETAILS OF CONSTRUCTION, MATERIALS AND WORKMANSHIP NOT SHOWN ON THIS DRAWING SHALL CONFORM TO THE PERTINENT REQUIREMENTS OF THE CONTRACT.

INSTALL FOUR ½ INCH MINIMUM DIAMETER X 4 INCH MINIMUM LENGTH STAINLESS STEEL APPROVED CONCRETE MASONRY ANCHORS TO ANCHOR THE CABINET TO TYPE 6, 7, 8, AND 9 BASES. THE ANCHOR STUDS SHALL BE LOCATED AS DIRECTED BY THE ENGINEER TO PROPERLY ANCHOR THE CONTROL CABINET TO THE BASE.

WHEN REQUIRED TO CONNECT NONMETALLIC CONDUIT TO METALLIC CONDUIT, ONLY ADAPTER FITTINGS, U.L. LISTED FOR ELECTRICAL USE, SHALL BE USED.

CONDUIT HEIGHT ABOVE THE CONCRETE BASE SHALL BE 1 INCH.

DEPTH OF CONDUIT INSTALLED BELOW THE TRAVELED WAY SHALL BE 24 INCHES MINIMUM AND 36 INCHES MAXIMUM.

DEPTH OF CONDUIT INSTALLED THAT IS NOT BELOW THE TRAVELED WAY SHALL BE 18 INCHES MINIMUM AND 36 INCHES MAXIMUM.

ANY EXCEPTION TO THE MAXIMUM DEPTH SHALL BE ONLY WITH THE WRITTEN APPROVAL OF THE ENGINEER.

CONTROL CABINET BASE TOP SURFACE SHALL BE TROWEL FINISHED SMOOTH AND LEVEL.

MAINTENANCE PLATFORM SHALL BE FLOAT OR BROOM FINISHED AND BE LEVEL.

MAINTENANCE PLATFORMS ARE NOT REQUIRED WHEN THE SURROUNDING AREA IS PAVED.

MINIMUM BENDING RADIUS OF CONDUIT = 6 X THE DIAMETER.

ALL METALLIC CONDUIT ENDS SHALL BE REAMED AND THREADED.

CAP ALL BELOW GRADE METALLIC CONDUIT ENDS IN WHICH WIRE OR CABLE IS NOT BEING INSTALLED.

PLUG ALL BELOW GRADE NONMETALLIC CONDUIT ENDS IN WHICH WIRE OR CABLE IS NOT BEING INSTALLED.

ALL CONDUIT ENDS AT THE TOP OF CONCRETE BASES SHALL BE CAPPED IF METALLIC OR PLUGGED IF NONMETALLIC IMMEDIATELY AFTER PLACEMENT AND BEFORE CONCRETE IS POURED. CONDUITS IN WHICH WIRE OR CABLE IS NOT BEING INSTALLED SHALL REMAIN CAPPED OR PLUGGED.

CONDUIT EXITING THE CONCRETE BASE (SIX THREE INCH) SHALL TERMINATE IN PULL BOXES AS SHOWN ON THE PLANS.

CONCRETE FORM DEPTH BELOW FINISHED GRADE SHALL BE 6" MAXIMUM. CONCRETE FORMS SHALL BE REMOVED AFTER CONCRETE HAS SET.

BELL ENDS SHALL BE INSTALLED ON ALL PVC CONDUIT EXPOSED AT THE TOP OF THE CONCRETE BASE BEFORE INSTALLATION OF CABLE OR WIRE.

CONCRETE CONTROL CABINET BASE, TYPE 9, SPECIAL

STATE OF WISCONSIN
DEPARTMENT OF TRANSPORTATION

APPROVED

2/27/07 — DATE

/S/ Balu Ananthanarayanan — STATE ELECTRICAL ENGI

HWYS

FHWA

GENERAL NOTES

DETAILS OF CONSTRUCTION, MATERIALS AND WORKMANSHIP NOT SHOWN ON THIS DRAWING SHALL CONFORM TO THE PERTINENT REQUIREMENTS OF THE CONTRACT.

BASES SHALL BE EXCAVATED BY USE OF A CIRCULAR AUGER.

TOP SURFACES OF CONCRETE BASES SHALL BE TROWEL FINISHED AND LEVEL.

CONDUIT SIZES AND LOCATIONS SHALL BE AS SHOWN ON THE PLANS.

THE FINAL OR TERMINATING CONCRETE BASE IN A CONDUIT RUN SHALL HAVE A 6" EXIT STUB INSTALLED FOR FUTURE CABLING USE. THE EXIT STUB SHALL BE SIZED AS USED THROUGHOUT THE CONDUIT RUN AS SHOWN AT THE ENTRANCE OF THE BASE.

MINIMUM BENDING RADIUS OF CONDUIT IS EQUAL TO 6 X THE DIAMETER.

CONDUIT HEIGHT ABOVE CONCRETE BASES SHALL BE 4 INCHES. ALL METALLIC CONDUIT ENDS SHALL BE REAMED AND THREADED. NONMETALLIC CONDUIT SHALL HAVE BELL END INSTALLED. ALL CONDUIT SHALL BE SLOPED TO PULL BOX.

ALL CONDUIT ENDS AT THE TOP OF CONCRETE BASES SHALL BE CAPPED IF METALLIC OR PLUGGED IF NONMETALLIC IMMEDIATELY AFTER PLACEMENT AND BEFORE CONCRETE IS POURED. CONDUIT IN WHICH WIRE OR CABLE IS NOT INSTALLED SHALL REMAIN CAPPED OR PLUGGED.

BELL ENDS SHALL BE INSTALLED ON ALL PVC CONDUIT EXPOSED AT THE TOP OF CONCRETE BASES BEFORE INSTALLATION OF CABLE OR WIRE.

ENDS OF CONDUIT INSTALLED BELOW GRADE FOR FUTURE USE SHALL BE CAPPED IF METALLIC OR PLUGGED IF NONMETALLIC.

WHEN REQUIRED TO CONNECT NONMETALLIC CONDUIT TO METALLIC CONDUIT, ONLY ADAPTER FITTINGS, U.L. LISTED FOR ELECTRICAL USE, SHALL BE USED.

IF A BASE REQUIRES A DEEP FORM BECAUSE OF LOOSE DIRT OR FILL, THE FORM SHALL BE REMOVED BEFORE BACKFILLING AROUND THE BASE. BACKFILL SHALL BE TAMPED TIGHT AGAINST THE BARE CONCRETE BASE IN LAYERS OF 1 FOOT OR LESS.

A NO. 4 AWG, STRANDED COPPER EQUIPMENT GROUNDING CONDUCTOR SHALL BE EXOTHERMICALLY WELDED TO THE EQUIPMENT GROUNDING ELECTRODE (GROUND ROD).

THE EQUIPMENT GROUNDING CONDUCTOR SHALL ENTER THE BASE THROUGH A 1 INCH CONDUIT INSTALLED FOR GROUNDING PURPOSES, LEAVING A 4 FOOT COIL OF WIRE ABOVE THE CONCRETE BASE. THE EQUIPMENT GROUNDING CONDUCTOR SHALL BE NEATLY COILED AND THE COILS TIED TOGETHER.

WELDING OF THE ANCHOR RODS TO THE CAGE IS UNACCEPTABLE. TEMPLATES SHALL BE USED.

BAR STEEL REINFORCEMENT SHALL BE COATED WITH POWDERED EPOXY RESIN IN ACCORDANCE WITH SECTION 505 OF THE STANDARD SPECIFICATIONS (LATEST EDITION).

ANCHOR RODS SHALL BE INSTALLED WITH MISALIGNMENTS OF LESS THAN 1:40 FROM VERTICAL.

(1) THE MINIMUM DEPTH OF CONDUIT EXITING THE CONCRETE BASE AND INSTALLED BELOW THE TRAVELED WAY SHALL BE 24 INCHES. THE MINIMUM DEPTH OF CONDUIT EXITING THE CONCRETE BASE THAT IS NOT INSTALLED BELOW THE TRAVELED WAY SHALL BE 18 INCHES. THE MAXIMUM DEPTH OF ALL CONDUIT SHALL BE 36 INCHES, (GREATER THAN 36 INCHES IF INSTALLED IN BREAKER-RUN), EXCEPT WITH WRITTEN APPROVAL BY THE ENGINEER.

(2) (6) NO. 6 X 13'-7" BAR STEEL REINFORCEMENT.

(3) (15) NO. 4 X 7'-4" BAR STEEL REINFORCEMENT @ 1'-0" C-C.

CONCRETE MASONRY	fc=3,500 p.s.i.
HIGH STRENGTH BAR STEEL REINFORCEMENT, GRADE 60	fy=60,000 p.s.i.
ANCHOR RODS, AASHTO M314 GRADE 55	fy=55,000 p.s.i.
TEMPLATES, ASTM, A709 GRADE 36	fy=36,000 p.s.i.

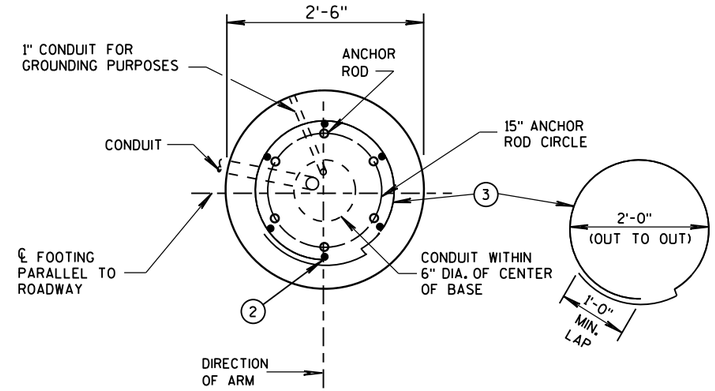

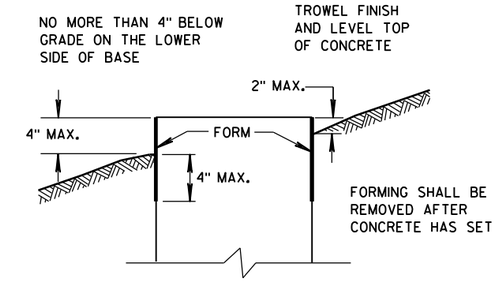

FORMING DETAIL

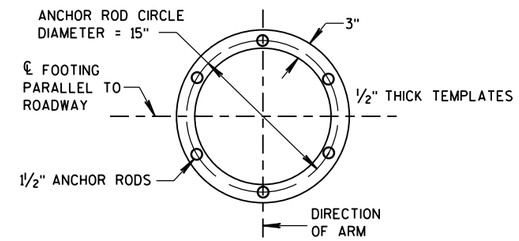

TOP AND BOTTOM TEMPLATES

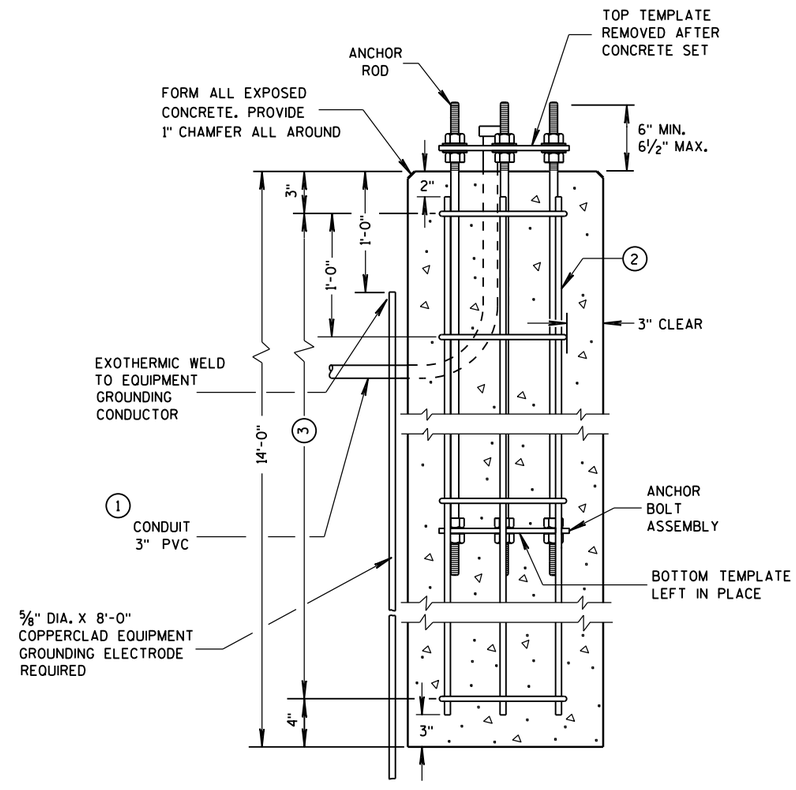

CONCRETE BASE TYPE 10
(FOR TYPE 9 & 10 POLES)

TO BE USED WHEN GROUND ELEVATION AT BASE EQUALS OR IS GREATER THAN HIGH POINT OF ROADWAY ELEVATION. SEE S.D.D. 9C13-1 WHEN GROUND ELEVATION AT BASE IS LOWER THAN HIGH POINT OF ROADWAY ELEVATION.

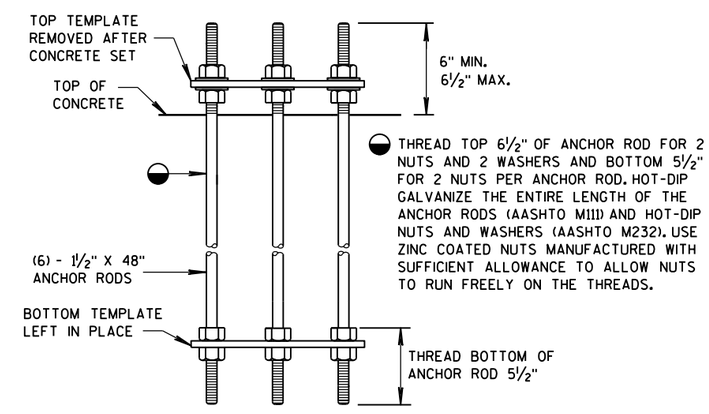

ANCHOR BOLT ASSEMBLY DETAIL

CONCRETE BASE TYPE 10 ANCHOR ASSEMBLY

QUANTITY REQUIREMENTS	
APPROX. CUBIC YARDS OF CONCRETE	2.5
LBS. OF HOOP BAR STEEL	69
LBS. OF VERTICAL BAR STEEL	122

CONCRETE BASE TYPE 10

STATE OF WISCONSIN
DEPARTMENT OF TRANSPORTATION

APPROVED
1-16-2013 — DATE
/S/ Ahmet Demirbilek — STATE ELECTRICAL
FHWA

6

S.D.D. 9 C 11-3

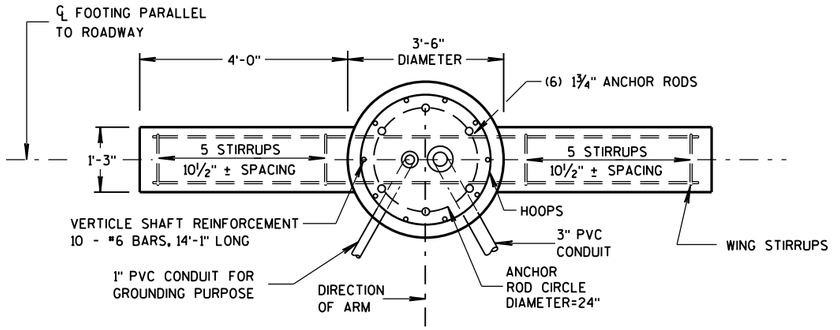

PLAN VIEW

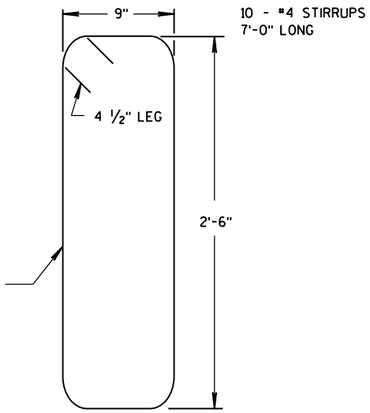

WING STIRRUP

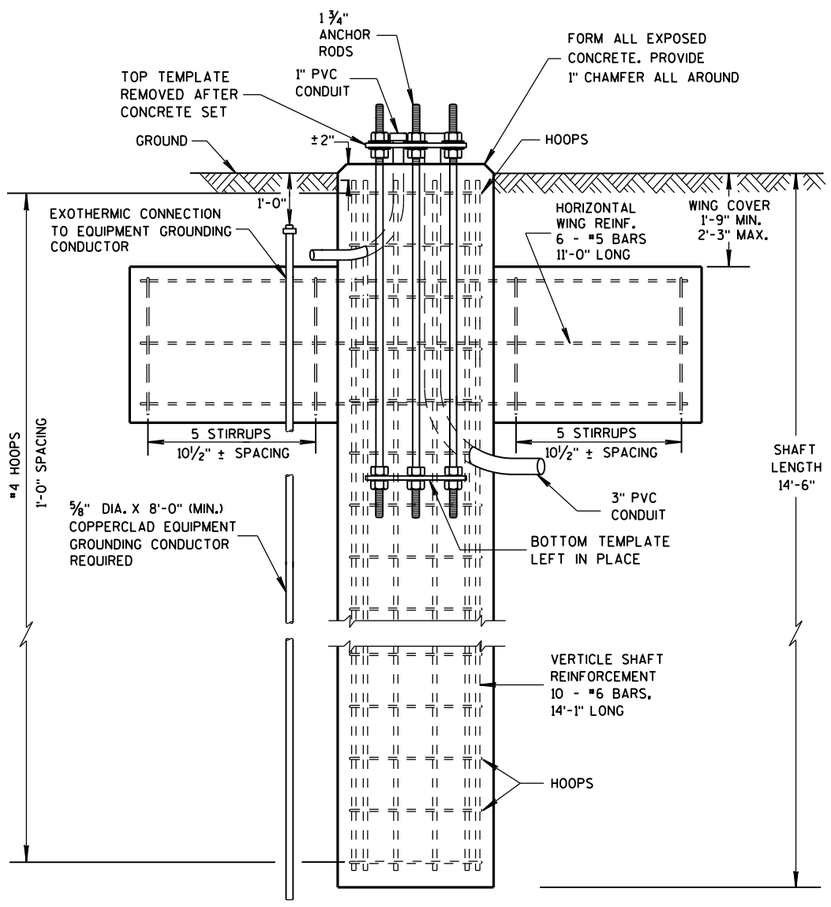

ELEVATION VIEW

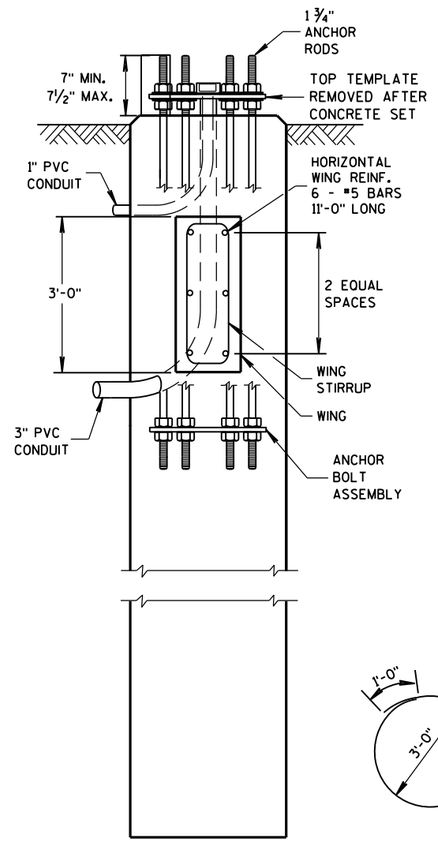

SIDE VIEW

DOES NOT SHOW HOOPS OR VERTICAL SHAFT REINFORCEMENT

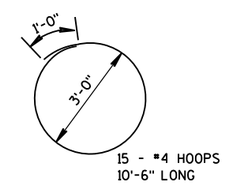

HOOP DETAIL

GENERAL NOTES

DETAILS OF CONSTRUCTION, MATERIALS AND WORKMANSHIP NOT SHOWN ON THIS DRAWING SHALL CONFORM TO THE PERTINENT REQUIREMENTS OF THE CONTRACT.

ORIENT ANCHOR RODS IN FOOTING AND PROVIDE ANCHOR ROD PROJECTION ABOVE TOP OF CONCRETE FOOTING BASE PER THIS SHEET.

BENDING DIMENSIONS FOR REINFORCING BARS ARE OUT TO OUT.

USE 3" CLEAR FOR ALL REINFORCEMENT UNLESS NOTED OTHERWISE.

THE CONTRACTOR IS RESPONSIBLE FOR MAKING HIS OWN DETERMINATION AS TO THE TYPE AND LOCATION OF THE UNDERGROUND UTILITIES AS MAY BE NECESSARY TO AVOID DAMAGE THERETO.

WELDING OF ANCHOR RODS TO THE CAGE IS UNACCEPTABLE. TEMPLATES SHALL BE USED.

BASES (SHAFT), BELOW THE WING, SHALL BE EXCAVATED BY THE USE OF A CIRCULAR AUGER. IF A BASE REQUIRES A DEEP FORM BECAUSE OF LOOSE SOIL, THE FORM SHALL BE REMOVED BEFORE BACKFILLING AROUNG THE BASE. BACKFILL SHALL BE TAMPED TIGHT AGAINST THE BARE CONCRETE BASE IN LAYERS OF 1 FOOT OR LESS.

TOP SURFACE OF THE CONCRETE BASE SHALL BE TROWEL FINISHED AND LEVEL.

CONDUIT SIZE AND LOCATIONS SHALL BE AS SHOWN ON THE PLANS.

MINIMUM BENDING RADIUS OF CONDUIT IS EQUAL TO 6 X THE DIAMETER.

CONDUIT HEIGHT ABOVE CONCRETE BASE SHALL BE 4½" INCHES. ALL METALLIC CONDUIT ENDS SHALL BE REAMED AND THREADED. NONMETALLIC CONDUIT SHALL HAVE BELL ENDS INSTALLED. ALL CONDUIT SHALL SLOPE TO PULL BOX.

ALL CONDUIT ENDS AT THE TOP OF THE BASES SHALL BE CAPPED IF METALLIC OR PLUGGED IF NONMETALLIC IMMEDIATELY AFTER PLACEMENT AND BEFORE CONCRETE IS POURED. CONDUITS IN WHICH WIRE OR CABLE IS NOT INSTALLED SHALL REMAIN CAPPED OR PLUGGED.

BELL ENDS SHALL BE INSTALLED ON ALL PVC CONDUIT EXPOSED AT THE TOP OF CONCRETE BASES BEFORE INSTALLATION OF CABLE OR WIRE.

WHEN REQUIRED TO CONNECT NONMETALLIC CONDUIT TO METALLIC CONDUIT, ONLY ADAPTOR FITTINGS, UL LISTED FOR ELECTRICAL USE, SHALL BE USED.

A NO. 4 AWG, STRANDED COPPER EQUIPMENT GROUNDING CONDUCTOR SHALL BE EXOTHERMICALLY WELDED TO THE EQUIPMENT GROUNDING ELECTRODE (GROUND ROD).

THE EQUIPMENT GROUNDING CONDUCTOR SHALL BE FURNISHED AND INSTALLED TO ENTER THE BASE THROUGH A 1-INCH CONDUIT INSTALLED FOR GROUNDING PURPOSES, LEAVING A 4-FOOT COIL OF WIRE ABOVE THE CONCRETE BASE, THE EQUIPMENT GROUNDING CONDUCTOR SHALL BE NEATLY COILED AND THE COILS TIED TOGETHER.

BAR STEEL REINFORCEMENT SHALL BE COATED WITH POWDERED EPOXY RESIN IN ACCORDANCE WITH SECTION 505 OF THE STANDARD SPECIFICATIONS.

THE MINIMUM DEPTH OF CONDUIT EXITING THE CONCRETE BASE AND INSTALLED BELOW THE TRAVEL WAY SHALL BE 24-INCHES. THE MINIMUM DEPTH OF CONDUIT EXITING THE CONCRETE BASE THAT IS NOT INSTALLED BELOW THE TRAVELED WAY SHALL BE 18-INCHES. THE MAXIMUM DEPTH OF ALL CONDUIT SHALL BE 36-INCHES, (GREATER THAN 36-INCHES IF INSTALLED IN BREAKER-RUN), EXCEPT WITH THE WRITTEN APPROVAL OF THE ENGINEER.

ANCHOR RODS SHALL BE INSTALLED WITH MISALIGNMENTS OF LESS THAN 1:40 FROM VERTICAL.

CONCRETE MASONRY	fc=3,500 p.s.i.
HIGH STRENGTH BAR STEEL REINFORCEMENT, GRADE 60	fy=60,000 p.s.i.
ANCHOR RODS, AASHTO M314 GRADE 55	fy=55,000 p.s.i.
TEMPLATES, ASTM A709 GRADE 36	fy=36,000 p.s.i.

(FOR TYPE 12 & 13 POLES)

CONCRETE = 6.3 C.Y.
H.S. REINFORCEMENT = 433 LBS.

TO BE USED WHEN GROUND ELEVATION AT BASE EQUALS OR IS GREATER THAN HIGH POINT OF ROADWAY ELEVATION.
SEE S.D.D. 9C13-1 WHEN GROUND ELEVATION AT BASE IS LOWER THAN HIGH POINT OF ROADWAY ELEVATION.

CONCRETE BASE TYPE 13

STATE OF WISCONSIN
DEPARTMENT OF TRANSPOI

6

S.D.D. 9 C 12-3a

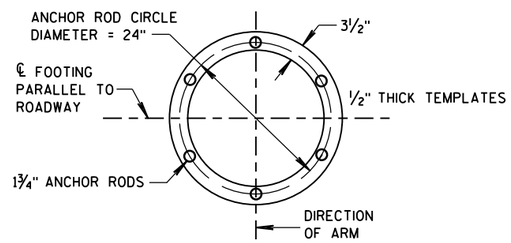

TOP AND BOTTOM TEMPLATES

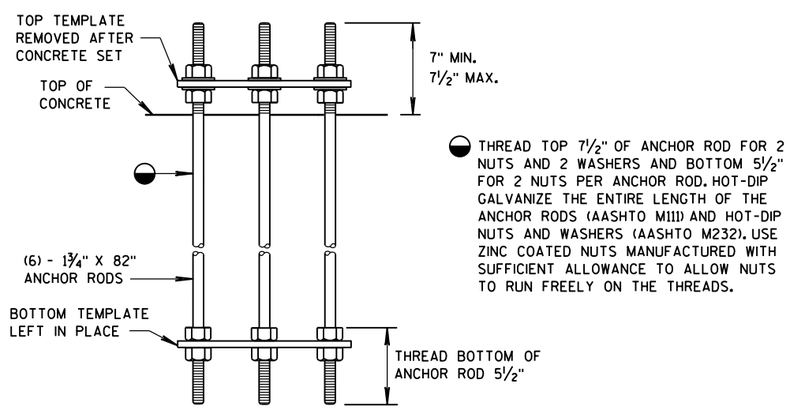

ANCHOR BOLT ASSEMBLY DETAIL

CONCRETE BASE TYPE 13 ANCHOR ASSEMBLY

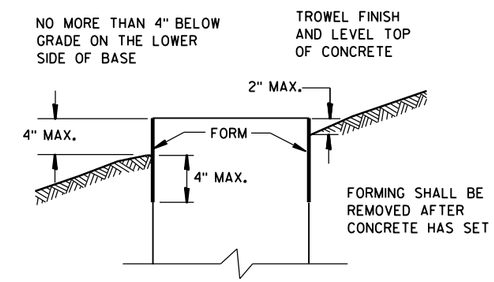

FORMING DETAIL

6

6

S.D.D. 9 C 12-3b

S.D.D. 9 C 12-3b

CONCRETE BASE TYPE 13

STATE OF WISCONSIN
DEPARTMENT OF TRANSPORTATION

APPROVED

1-16-2013 — DATE

/S/ Ahmet Demirbilek — STATE ELECTRICAL

FHWA

REINFORCEMENT AND CONCRETE QUANTITIES ADJUSTED FOR EXTENDED TYPE 10 CONCRETE BASE

HEIGHT INCREASE REQUIRED	* HEIGHT ABOVE GROUND SURFACE ON LOW SIDE (MAXIMUM)	SHAFT LENGTH	LENGTH OF #6 VERTICAL REINF.	NO. OF #4 HOOPS	C.Y. OF CONCRETE	LBS. OF HOOP BAR STEEL	LBS. OF VERTICAL BAR STEEL
>0" TO 6"	10"	14'-6"	14'-1"	16	2.6	78	127
>6" TO 1'-0"	1'-4"	15'-0"	14'-7"	16	2.7	78	131
>1'-0" TO 1'-6"	1'-10"	15'-6"	15'-1"	17	2.8	83	136
>1'-6" TO 2'-0"	2'-4"	16'-0"	15'-7"	17	2.9	83	141

REINFORCEMENT AND CONCRETE QUANTITIES ADJUSTED FOR EXTENDED TYPE 13 CONCRETE BASE

HEIGHT INCREASE REQUIRED	* HEIGHT ABOVE GROUND SURFACE ON LOW SIDE (MAXIMUM)	SHAFT LENGTH	LENGTH OF #6 VERTICAL REINF.	NO. OF #4 HOOPS	C.Y. OF CONCRETE	LBS. OF H.S. BAR STEEL
>0" TO 6"	10"	15'-0"	14'-7"	16	6.5	447
>6" TO 1'-0"	1'-4"	15'-6"	15'-1"	16	6.6	454
>1'-0" TO 1'-6"	1'-10"	16'-0"	15'-7"	17	6.8	469
>1'-6" TO 2'-0"	2'-4"	16'-6"	16'-1"	17	7.0	476

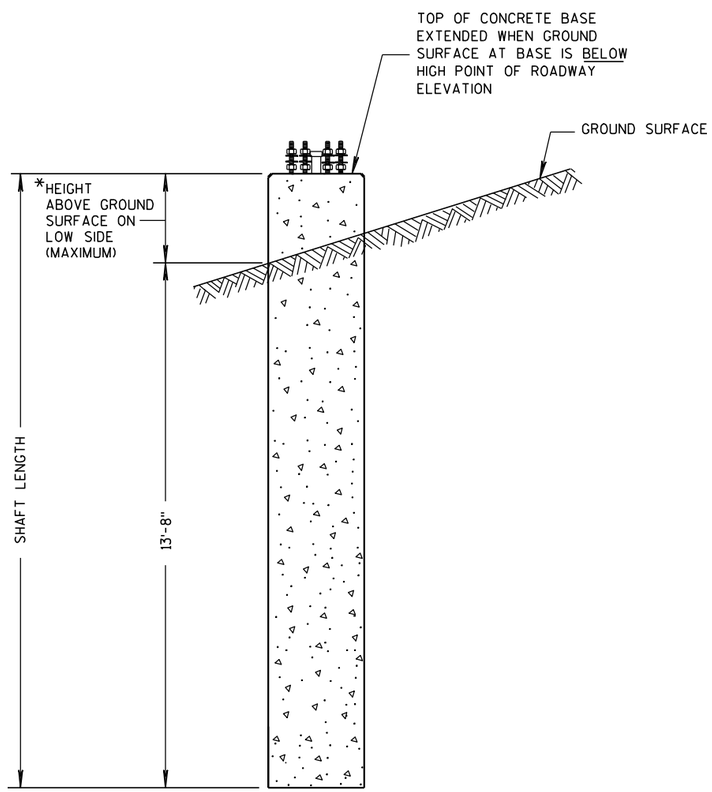

CONCRETE BASE TYPE 10 (EXTENDED)

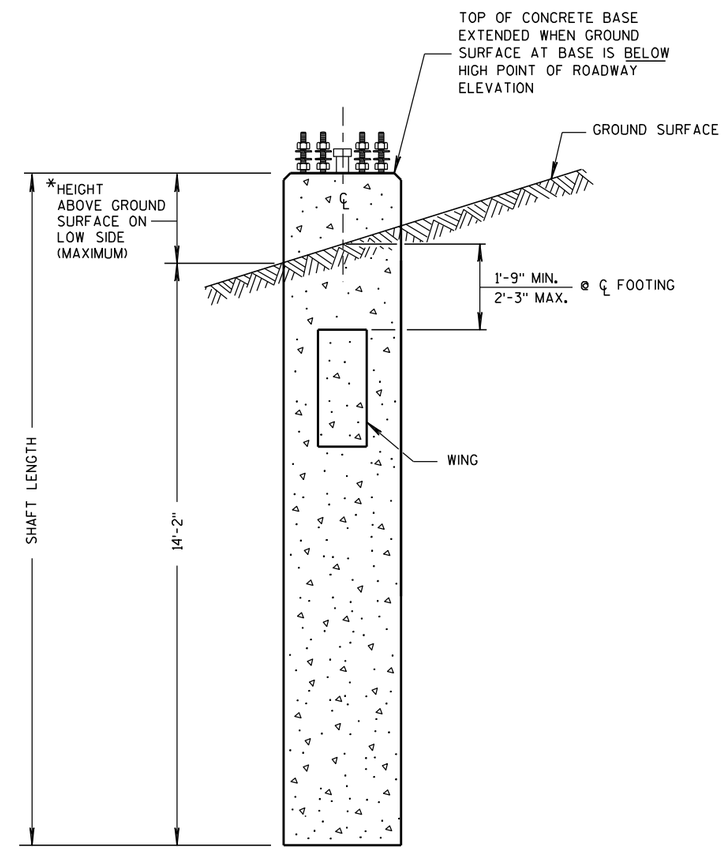

CONCRETE BASE TYPE 13 (EXTENDED)

CONCRETE BASE TYPE 10 & TYPE 13 EXTENSION

STATE OF WISCONSIN
DEPARTMENT OF TRANSPORTATION

APPROVED

3-3-10 — DATE

/S/ Joanna L. Rush — STATE ELECTRICAL ENGI

HWYS

FHWA

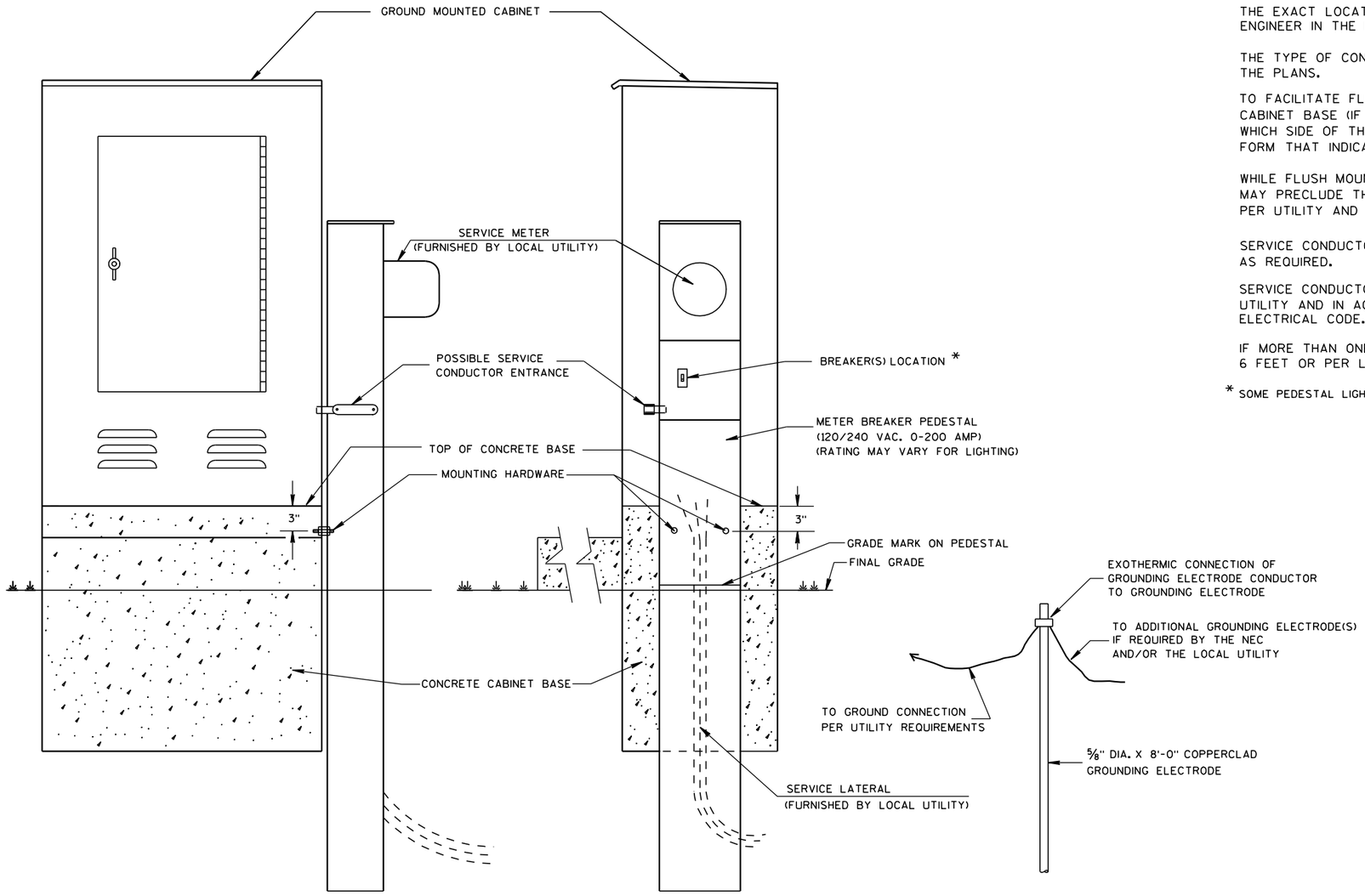

TYPICAL CABINET SERVICE INSTALLATION

GENERAL NOTES

DETAILS OF CONSTRUCTION, MATERIALS AND WORKMANSHIP NOT SHOWN ON THIS DRAWING SHALL CONFORM TO THE PERTINENT REQUIREMENTS OF THE CONTRACT.

THE EXACT LOCATION OF THE METER BREAKER PEDESTAL SHALL BE DETERMINED BY THE ENGINEER IN THE FIELD.

THE TYPE OF CONCRETE CABINET BASE TO BE INSTALLED SHALL BE AS CALLED FOR IN THE PLANS.

TO FACILITATE FLUSH MOUNTING OF THE METER BREAKER PEDESTAL AGAINST THE SIDE OF THE CABINET BASE (IF FLUSH MOUNTING POSSIBLE. CONFER WITH THE LOCAL UTILITY TO DETERMINE WHICH SIDE OF THE CONCRETE BASE THE ELECTRICAL SERVICE LATERAL WILL APPROACH. THEN FORM THAT INDICATED SIDE FOR FULL SIDE DEPTH.

WHILE FLUSH MOUNTING IS THE MOST DESIRABLE MOUNTING CONFIGURATION UTILITY REQUIREMENTS MAY PRECLUDE THIS OPTION. CONTRACTOR MUST PROVIDE UTILITY APPROVED PEDESTAL AND INSTALL PER UTILITY AND MANUFACTURERS REQUIREMENTS.

SERVICE CONDUCTOR ENTRANCES SHALL BE RIGID METALLIC CONDUIT, NIPPLES AND/OR CONDULETS AS REQUIRED.

SERVICE CONDUCTOR ENTRANCES SHALL BE SIZED AND LOCATED AS REQUIRED BY THE LOCAL UTILITY AND IN ACCORDANCE WITH APPROPRIATE ARTICLES OF THE LATEST ACCEPTED NATIONAL ELECTRICAL CODE.

IF MORE THAN ONE GROUNDING ELECTRODE IS REQUIRED, THE DISTANCE APART SHALL BE 6 FEET OR PER LOCAL UTILITY REGULATIONS.

* SOME PEDESTAL LIGHTING PLANS SHOW MAIN LUGS ONLY.

CABINET SERVICE INSTALLATION (METER BREAKER PEDESTAL)

STATE OF WISCONSIN
DEPARTMENT OF TRANSPORTATION

APPROVED
10/27/09 — DATE
/S/ Joanna L. Bush — STATE ELECTRICAL ENGI
HWYS
FHWA

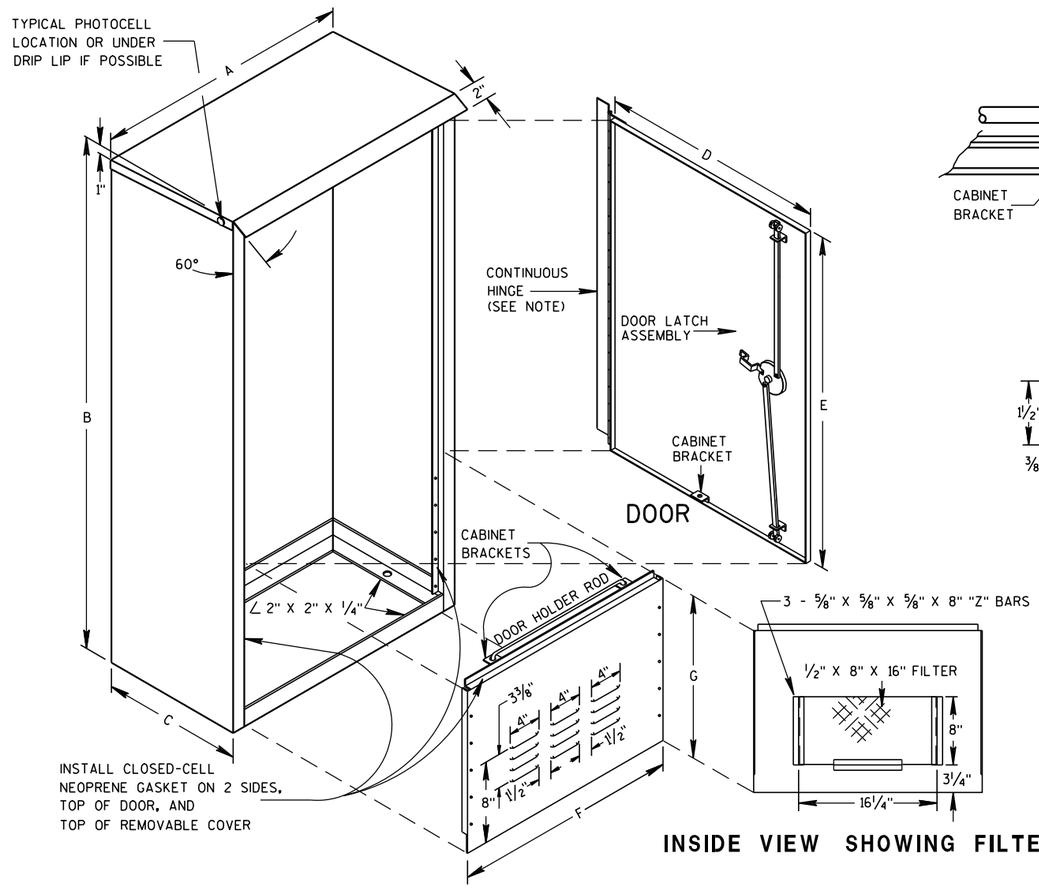

REMOVABLE COVER

INSIDE VIEW SHOWING FILTER

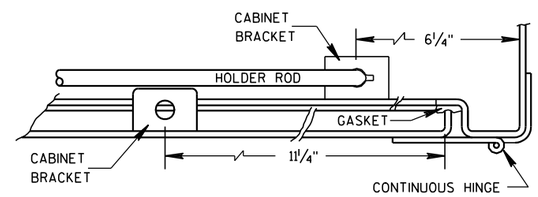

HINGE & DOOR HOLDER

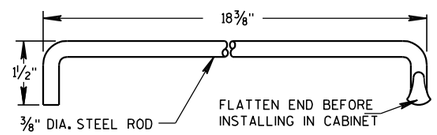

HOLDER ROD

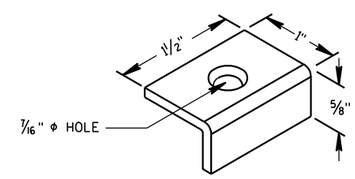

CABINET BRACKET

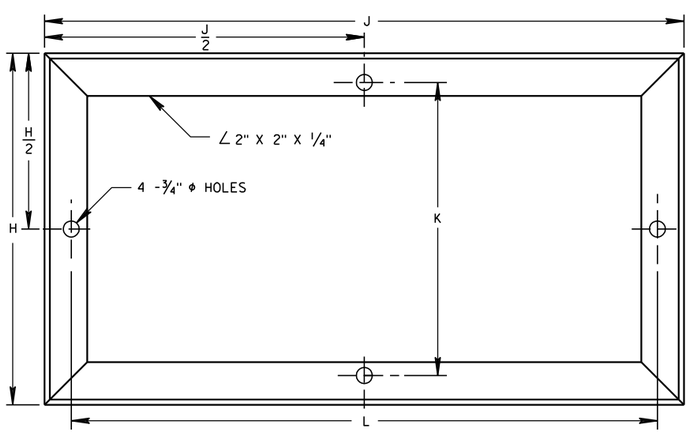

MOUNTING BASE

TABLE OF DIMENSIONS (INCHES)

MARK	CABINET TYPE		
	3060	3860	3866
A	30	38	38
B	60	60	66
C	16 1/2	16 1/2	24
D	26 1/2	34 3/4	33 3/4
E	38 3/4	38 3/4	38 3/4
F	26 1/2	34 3/4	33 3/4
G	19	19	25
H	16 1/2	16 1/2	24
H/2	8 1/4	8 1/4	12
J	30	38	38
J/2	15	19	19
K	13 3/4	13 3/4	21 1/4
L	27 1/2	35 1/2	35 1/2

GENERAL NOTES

DETAILS OF CONSTRUCTION, MATERIALS AND WORKMANSHIP NOT SHOWN ON THIS DRAWING SHALL CONFORM TO THE PERTINENT REQUIREMENTS OF THE STANDARD SPECIFICATIONS AND APPLICABLE SPECIAL PROVISIONS.

PRIME WITH PHOSPHATE TREATMENT AND PRIMER.

FINISH EXTERIOR SURFACES WITH RUSTOLEUM #906 SILVER GRAY OR APPROVED EQUAL.

FINISH INTERIOR WITH RUSTOLEUM #2766 HIGH GLOSS WHITE ENAMEL OR APPROVED EQUAL.

ALL SHEET METAL PARTS SHALL BE .125 INCH THICK ALUMINUM.

ALL SEAMS SHALL BE CONTINUOUSLY WELDED.

ALUMINUM SHALL BE TYPE 5052-H32.

CONTINUOUS HINGE SHALL BE HEAVY GAUGE ALUMINUM WITH 1/4" DIAMETER STAINLESS STEEL HINGE PIN. HINGE IS SECURED WITH 1/4" X 20 TPI STAINLESS STEEL CARRIAGE BOLTS AND STAINLESS STEEL NYLOCK NUTS.

A SINGLE PHOTOCELL SHALL BE LOCATED ON THE NORTH-NORTHEAST SIDE OF THE CABINET UNLESS OTHERWISE CALLED FOR IN THE SPECIAL PROVISIONS. THE PHOTOCELL SHALL BE PLACED AS SHOWN AND SHALL BE AN APPROVED TYPE.

DOOR LATCH ASSEMBLY TO BE PROVIDED WITH THREE-POINT LOCKING MECHANISM.

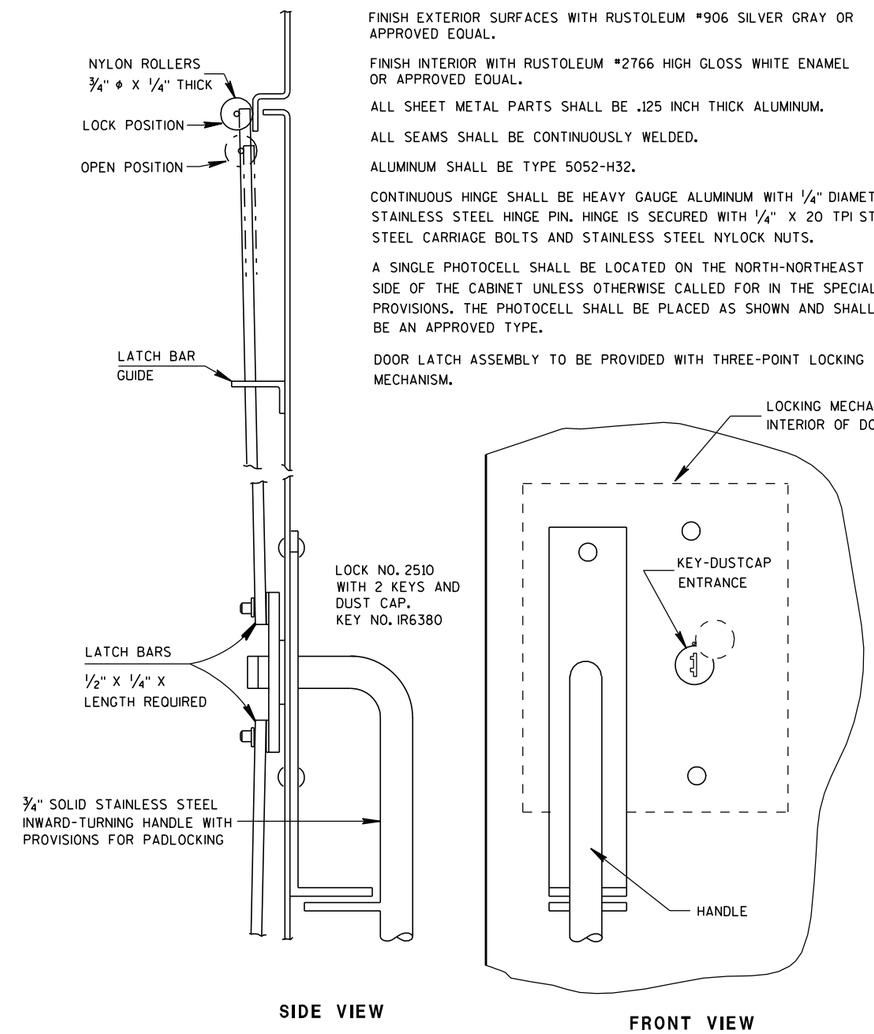

SIDE VIEW

FRONT VIEW

LATCH ASSEMBLY

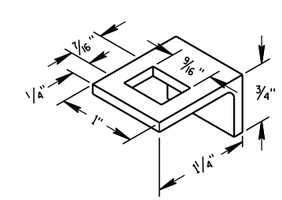

LATCH BAR GUIDE

SIGNAL OR LIGHTING CONTROL CABINET

STATE OF WISCONSIN
DEPARTMENT OF TRANSPORTATION

APPROVED
10/21/96 — DATE
/S/ Balu Ananthanarayanan — STATE ELECTRICAL ENGI
FHWA — HWYS

6

S.D.D. 9 D 2-2

FOR MANUFACTURERS USE ONLY

WELD TO BE 100% R.T. OR U.T. TESTED AS PER THE REQUIREMENTS OF AWS D 1.5-88. RECORDS OF COMPLIANCE OF SUCH TESTING SHALL BE FURNISHED TO THE OFFICE OF DESIGN/BRIDGE FOR VERIFICATION AND APPROVAL.

*RISE FOR 4' ARM SHALL BE 2'-0".

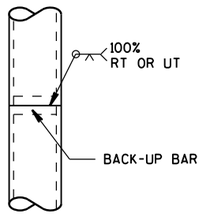

POLE SPLICE DETAIL

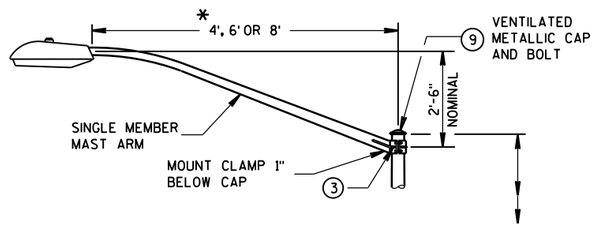

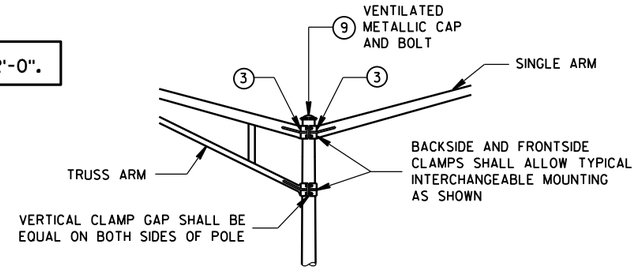

INTERCHANGEABLE MOUNTING DETAIL

LUMINAIRE
WT. - 50 LBS.
EFFECTIVE PROJECTED AREA FOR WIND LOADING = 1.5 SQ. FT.

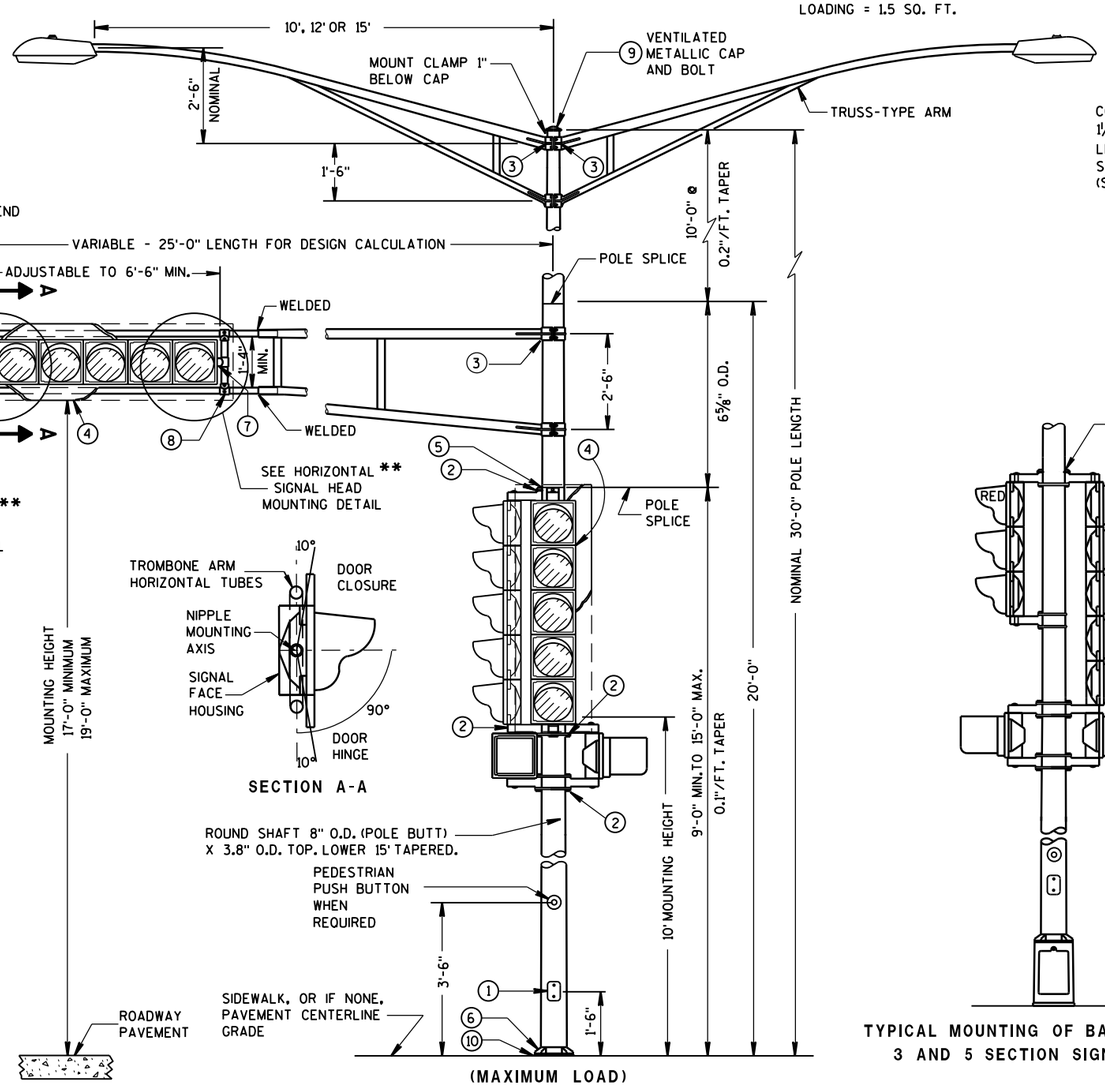

(MAXIMUM LOAD)

TYPE 3 POLE MOUNTING CONFIGURATION

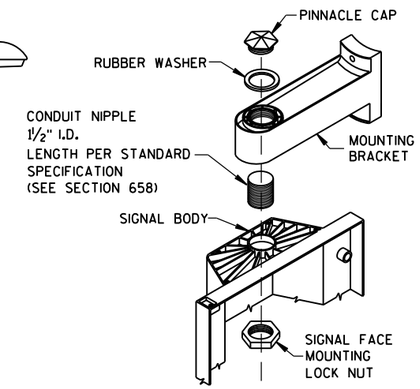

SIGNAL FACE MOUNTING DETAIL
(BANDED)

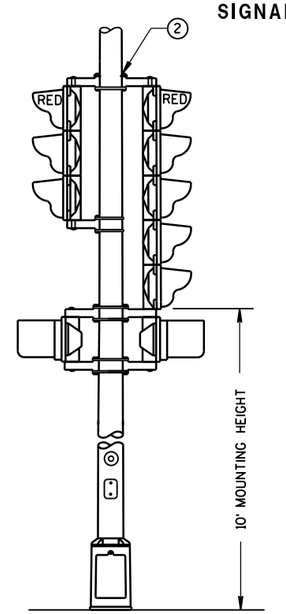

TYPICAL MOUNTING OF BACK TO BACK 3 AND 5 SECTION SIGNAL FACES

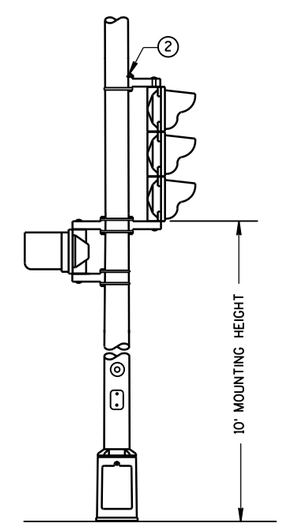

TYPICAL MOUNTING OF 3 SECTION SIGNAL FACE

GENERAL NOTES

DETAILS OF CONSTRUCTION, MATERIALS AND WORKMANSHIP NOT SHOWN ON THIS DRAWING SHALL CONFORM TO THE PERTINENT REQUIREMENTS OF THE CONTRACT.

ALL TYPE 3 POLE MOUNTINGS SHALL BE DESIGNED TO INCLUDE TWIN 15' ARMS WITH LUMINAIRES.

POLES SHALL BE GALVANIZED STEEL.

SECTION 657, POLES, OF THE STANDARD SPECIFICATIONS SHALL APPLY TO THIS DRAWING.

A PULL WIRE/ROPE IN ACCORDANCE WITH STANDARD SPECIFICATION 652, SHALL BE INSTALLED IN EACH TROMBONE ARM RACEWAY DURING THE MANUFACTURING PROCESS.

THE SLIPFITTER END OF THE LUMINAIRE MAST ARM SHALL BE A NOMINAL 2⅜ INCHES IN OUTSIDE DIAMETER. THE STRAIGHT PORTION OF THE SLIPFITTER END OF THE LUMINAIRE MAST ARM SHALL BE A NOMINAL 12 INCHES IN LENGTH.

WHEN TRANSFORMER BASES ARE USED, WIRE CONNECTIONS SHALL BE MADE IN THE TRANSFORMER BASE.

1. 4" X 6" REINFORCED HANDHOLE & COVER ASSEMBLY WITH 2 (TWO) ¼" X ¾" - 20 TPI HEX HEAD STAINLESS STEEL BOLTS.
2. SIGNAL FACE MOUNTING BRACKETS, MOUNT WITH CAP SCREWS AND BANDING. (SEE STANDARD SPECIFICATIONS - SEC. 658)
3. GROMMETS, 1" CHASE NIPPLES OR 1" CLOSE CONDUIT NIPPLES WITH BUSHINGS SHALL BE PROVIDED FOR 1⅜" HOLE IN POLE SHAFT FOR WIRING.
4. SECURELY MOUNT DULL BLACK POLYCARBONATE BACKPLATES, PROJECTING 5" BEYOND ALL SIDES OF THE SIGNAL FACE HOUSING, PER MANUFACTURER'S RECOMMENDATIONS.
5. POLE MOUNTED SIGNAL FACES SHALL REQUIRE 1 OR MORE MOUNTING SPACERS UNDER THE TOP MOUNTING BRACKET(S) AS REQUIRED, TO PLUMB THE SIGNAL FACE.
6. TYPE 3 POLE CONFIGURATIONS SHALL BE MOUNTED DIRECTLY TO THEIR CONCRETE BASES.
7. MOUNTING BRACKET NIPPLES FOR THE SIGNAL FACE(S) SHALL BE 2 INCHES IN LENGTH AND 1½ INCHES IN DIAMETER. (SEE STANDARD SPECIFICATION - SECTION 658)
8. VERTICAL STRUT (ADJUSTABLE). ONE (1) SET SCREW (1/4 " X ¾" -20 TPI, STAINLESS STEEL, HEX HEAD) INTO EACH ARM MEMBER IF STRUT IS THE SLIDING TYPE.
9. FURNISH AND INSTALL VENTILATED, CAST, METALLIC (ALUMINUM ALLOY) CAPS. FASTEN CAPS WITH ONE (1) ¼" X ¾" - 20 TPI STAINLESS STEEL, HEX HEAD BOLT.
10. SHIMMING, IF NEEDED, SHALL BE LOCATED BETWEEN THE CONCRETE FOUNDATION AND POLE.
11. USE SERRATED LOCK WASHERS WITH NOTCHES BETWEEN END TEE AND SIGNAL HEAD.

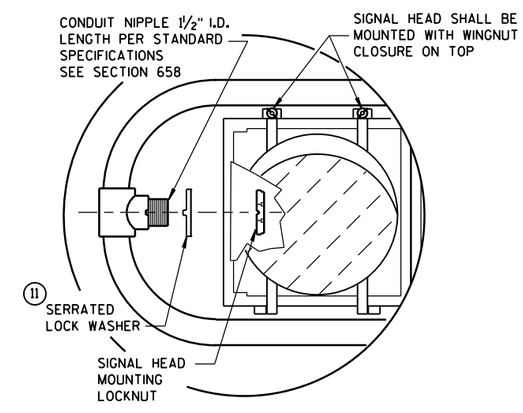

HORIZONTAL SIGNAL HEAD MOUNTING DETAIL **

** SIGNAL HEAD ATTACHMENT ALSO APPLYS TO MOUNTING AT CROSS BAR

POLE MOUNTINGS FOR TRAFFIC SIGNALS AND LIGHTING UNITS, TYPE 3 (HEAVY DUTY)

STATE OF WISCONSIN
DEPARTMENT OF TRANSPOI

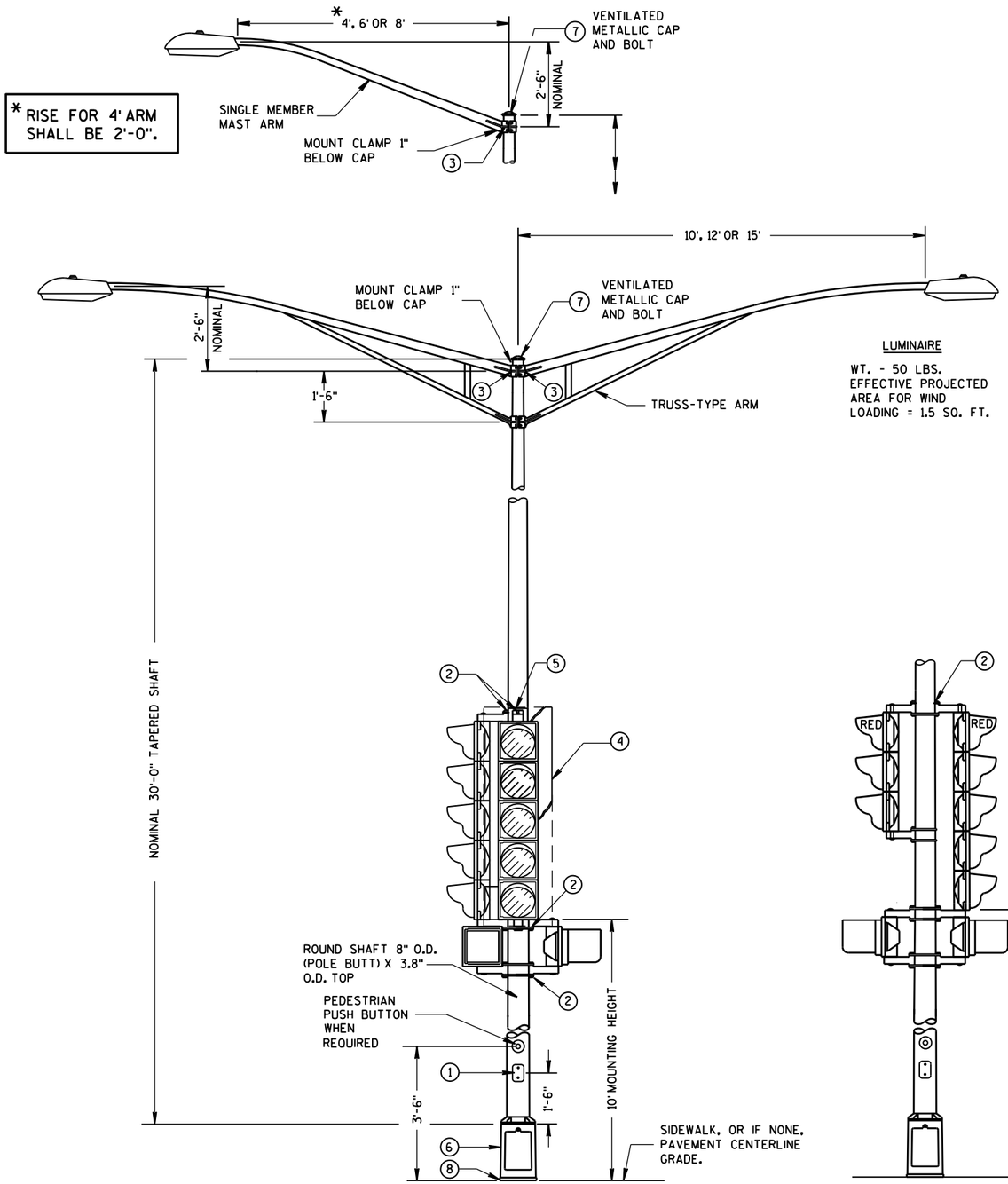

(MAXIMUM LOAD)

TYPICAL MOUNTING OF BACK TO BACK 3 AND 5 SECTION SIGNAL FACES

TYPICAL MOUNTING OF 3 SECTION SIGNAL FACE

TYPE 4 POLE MOUNTING CONFIGURATION

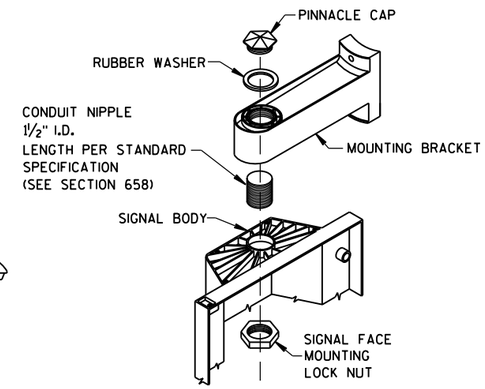

SIGNAL FACE MOUNTING DETAIL

(BANDED)

GENERAL NOTES

DETAILS OF CONSTRUCTION, MATERIALS AND WORKMANSHIP NOT SHOWN ON THIS DRAWING SHALL CONFORM TO THE PERTINENT REQUIREMENTS OF THE CONTRACT.

ALL TYPE 4 POLE MOUNTINGS SHALL BE DESIGNED TO INCLUDE TWIN 15' ARMS WITH LUMINAIRES.

POLES SHALL BE GALVANIZED STEEL WITH A MINIMUM WALL THICKNESS OF U.S. STANDARD 11 GAGE (.1196").

SECTION 657, POLES, OF THE STANDARD SPECIFICATIONS SHALL APPLY TO THIS DRAWING.

THE SLIPFITTER END OF THE LUMINAIRE MAST ARM SHALL BE A NOMINAL 2⅜ INCHES IN OUTSIDE DIAMETER. THE STRAIGHT PORTION OF THE SLIPFITTER END OF THE LUMINAIRE MAST ARM SHALL BE A NOMINAL 12 INCHES IN LENGTH.

WHEN TRANSFORMER BASES ARE USED, CONNECTIONS SHALL BE MADE IN THE TRANSFORMER BASE.

1. 4" X 6" REINFORCED HANDHOLE & COVER ASSEMBLY WITH 2 (TWO) ¼" X ¾" - 20 TPI HEX HEAD STAINLESS STEEL BOLTS.
2. SIGNAL FACE MOUNTING BRACKETS, MOUNT WITH CAP SCREWS AND BANDING. (SEE STANDARD SPECIFICATIONS - SEC. 658).
3. GROMMETS, 1" CHASE NIPPLES OR 1" CLOSE CONDUIT NIPPLES WITH BUSHINGS SHALL BE PROVIDED FOR 1⅜" HOLE IN POLE SHAFT FOR WIRING.
4. SECURELY MOUNT DULL BLACK POLYCARBONATE BACKPLATES, PROJECTING 5" BEYOND ALL SIDES OF THE SIGNAL FACE HOUSING, PER MANUFACTURER'S RECOMMENDATIONS.
5. POLE MOUNTED SIGNAL FACES SHALL REQUIRE 1 OR MORE MOUNTING SPACERS UNDER THE TOP MOUNTING BRACKET(S) AS REQUIRED, TO PLUMB THE SIGNAL FACE.
6. CAST ALUMINUM TRANSFORMER BASE, WHEN REQUIRED.
7. FURNISH AND INSTALL VENTILATED, CAST, METALLIC (ALUMINUM ALLOY) CAPS. FASTEN CAPS WITH ONE (1) ¼" X ¾" - 20 TPI STAINLESS STEEL, HEX HEAD BOLT.
8. SHIMMING, IF NEEDED, SHALL BE LOCATED BETWEEN THE CONCRETE FOUNDATION AND THE TRANSFORMER BASE.

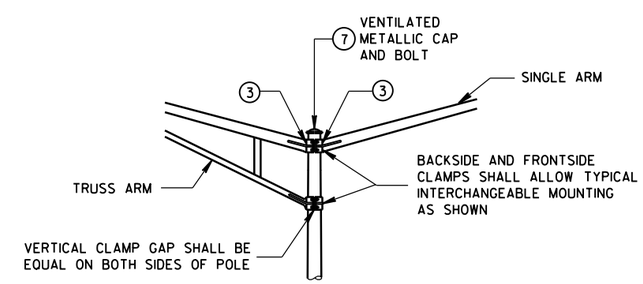

INTERCHANGEABLE MOUNTING DETAIL

POLE MOUNTINGS FOR TRAFFIC SIGNALS AND LIGHTING UNITS, TYPE 4

STATE OF WISCONSIN
DEPARTMENT OF TRANSPOR

6

S.D.D. 9 E 1-12c

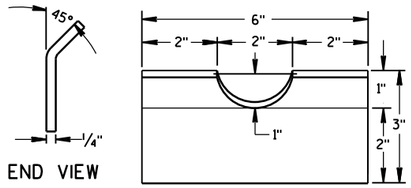

FRONT VIEW

RECTANGULAR CLAMP SHIM

(4 TO A SET)

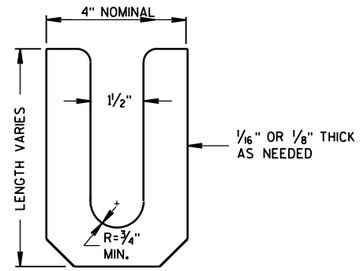

LEVELING SHIM (15)

SHALL BE ALUMINUM

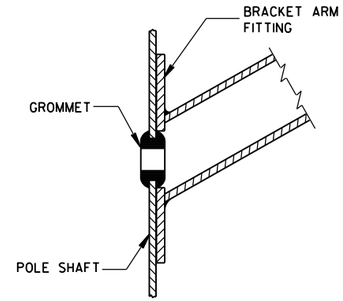

TYPICAL APPLICATION OF GROMMET IN POLE SHAFT

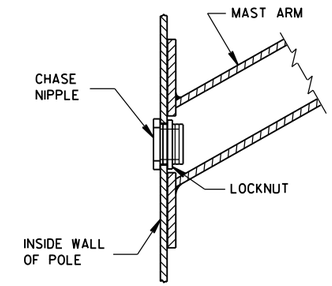

TYPICAL APPLICATION OF CHASE NIPPLE IN POLE SHAFT

GENERAL NOTES

CLAMP BOLT-NUT TIGHTENING TORQUE SHALL BE INDICATED BY INDENT STAMPING (1/2 INCH NUMERALS AND LETTERS) OR WEATHERPROOF PRINTING ON THE INSIDE OF THE CLAMP THAT IS WELDED TO THE ARM MEMBER.

(10) 4.5" I.D. FOR LUMINAIRE MAST ARM CLAMP.
6.625" I.D. FOR TROMBONE MAST ARM CLAMP.

(11) INDIVIDUAL BASE PLATE ANCHOR ROD COVERS. (4 REQUIRED)

(12) BASE PLATE SLOTTED TO ACCEPT 11" THROUGH 12" BOLT CIRCLE USING 1" DIAMETER ANCHOR RODS.

(13) OUTSIDE SHIM DIAMETER - (4.5" O.D. FOR LUMINAIRE MAST ARM)
(6.625" O.D. FOR TROMBONE MAST ARM)

(14) VARIABLE SHIM THICKNESS - (0.10", 0.25", 0.35", 0.53" OR 0.70")

SHIM THICKNESS FOR TROMBONE MAST ARMS MAY BE TYPICALLY 0.25", 0.35", 0.53" OR 0.70".

SHIM THICKNESS FOR LUMINAIRE MAST ARMS MAY BE TYPICALLY 0.10", 0.25" OR 0.35".

SHIM MATERIAL SHALL BE ALUMINUM ALLOY.

SHIM THICKNESS SHALL BE IMPRESSED INTO EACH SHIM. NUMERALS SHALL BE 1/4" HIGH AND LEGIBLE.

THE CONTRACTOR SHALL SUBMIT TWO COPIES OF ALL SHIM SHOP DRAWINGS TO THE ENGINEER FOR APPROVAL.

(15) LEVELING SHIMS, DESIGNED FOR THE PURPOSE, SHALL BE USED WHEN PLUMBING POLES. THE USE OF WASHERS IN LIEU OF PROPER LEVELING SHIMS IS NOT ACCEPTABLE. LEVELING SHIMS SHALL BE USED ONLY BETWEEN THE TOP OF THE CONCRETE BASE AND A METALLIC BASE PLATE.

SHIMS SHALL BE LONG ENOUGH AND WIDE ENOUGH TO COMPLETELY COVER THE AREA UNDER THE LENGTH AND WIDTH OF THE BASE MOUNTING FLANGE.

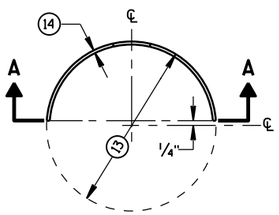

PLAN VIEW

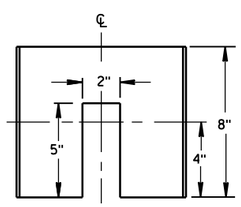

SECTION A-A

CIRCULAR CLAMP SHIM

(2 TO A SET)

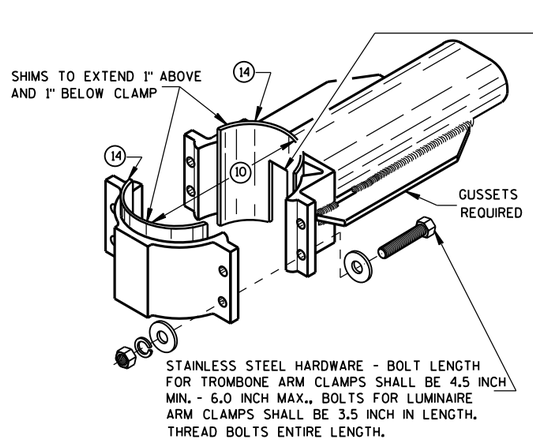

TYPICAL TROMBONE MAST ARM AND SINGLE LUMINAIRE MAST ARM MOUNTING CLAMP

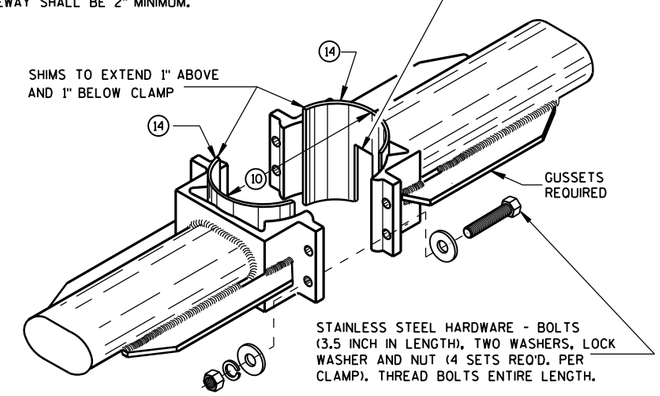

TYPICAL LUMINAIRE MAST ARM (DOUBLE) MOUNTING BRACKETS

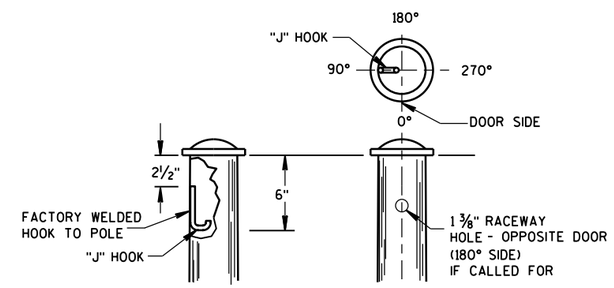

TYPICAL "J" HOOK LOCATION

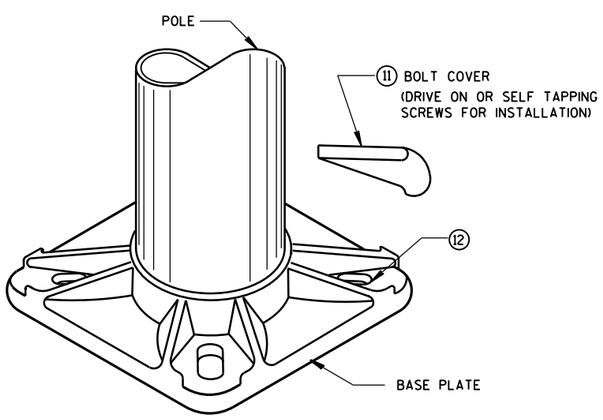

BASE PLATE

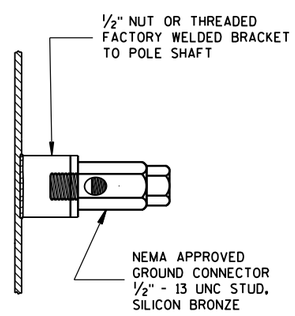

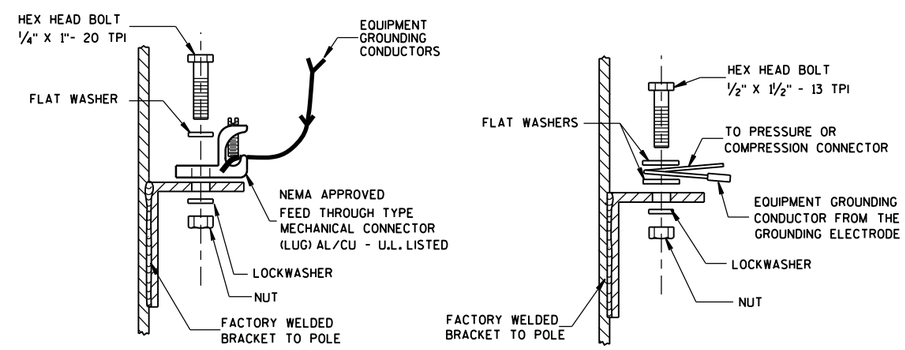

TYPICAL GROUNDING CONNECTIONS

NUT, BOLT AND WASHERS SHALL BE STAINLESS STEEL

6

6

S.D.D. 9 E 1-12g

S.D.D. 9 E 1-12g

HARDWARE DETAILS FOR POLE MOUNTINGS

STATE OF WISCONSIN
DEPARTMENT OF TRANSPORTATION

APPROVED
2/7/2013 — DATE
/S/ Ahmet Demirbilek — STATE ELECTRICAL
FHWA

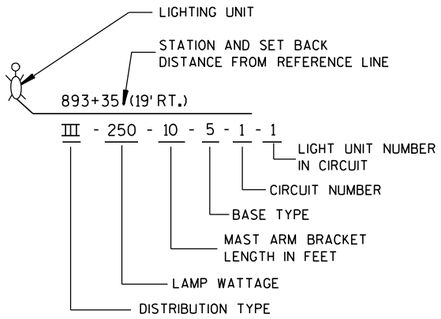

LIGHTING UNIT CODE
(TYPICAL)

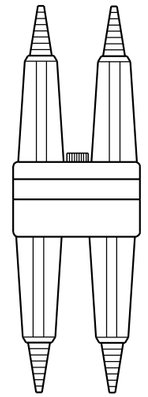

DETAIL "A"
BREAKAWY DOUBLE POLE WITH WATERPROOF INSULATING BOOT

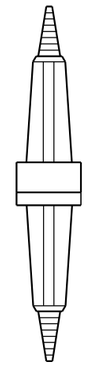

DETAIL "B"
BREAKAWY SINGLE POLE WITH WATERPROOF INSULATING BOOT

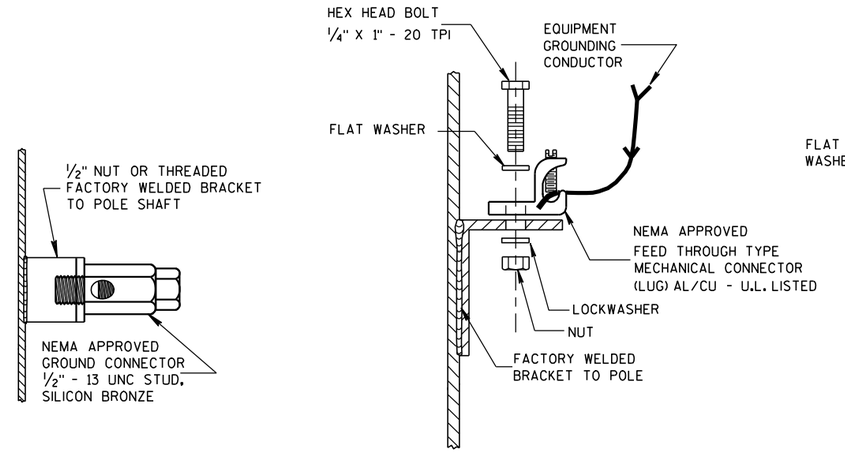

TYPICAL GROUNDING CONNECTIONS
NUT, BOLT, WASHERS AND LOCKWASHERS SHALL BE STAINLESS STEEL

GENERAL NOTES

DETAILS OF CONSTRUCTION, MATERIALS AND WORKMANSHIP NOT SHOWN ON THIS DRAWING SHALL CONFORM TO THE PERTINENT REQUIREMENTS OF THE CONTRACT.

THE EQUIPMENT GROUNDING CONNECTOR SHALL BE TAPED WITH 3 WRAPS (MINIMUM) OF APPROVED RUBBER TAPE AND THEN 3 WRAPS (MINIMUM) OF APPROVED VINYL TAPE TO COVER SHARP WIRE ENDS AFTER THE CONNECTION IS COMPLETED.

WHEN TRANSFORMER BASES ARE USED, ALL WIRING CONNECTIONS SHALL OCCUR WITHIN THE TRANSFORMER BASES.

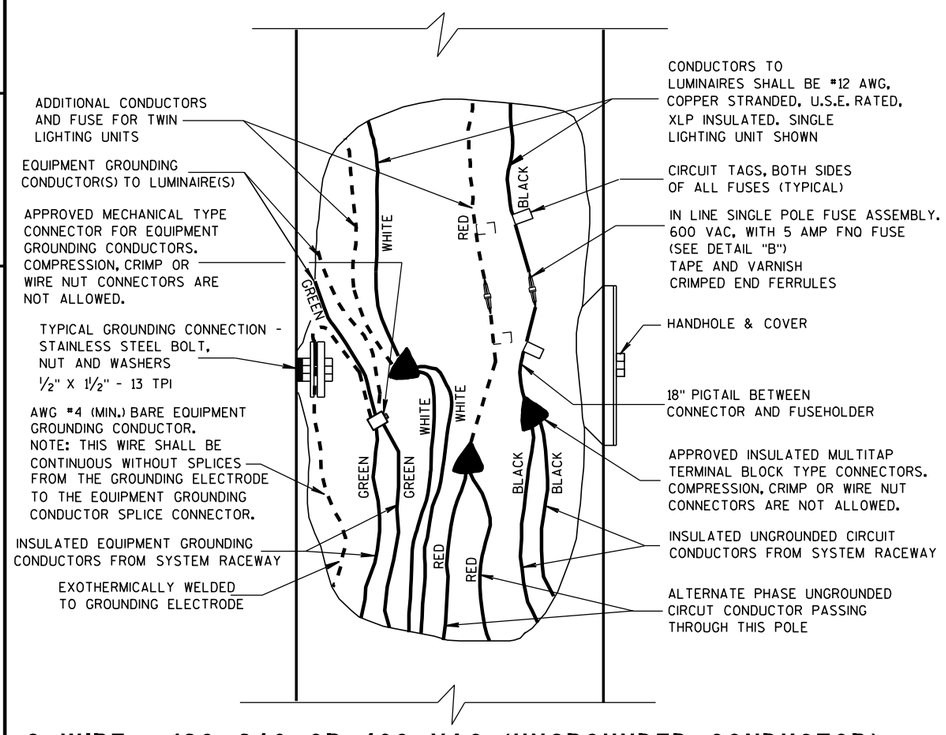

3 WIRE - 120, 240 OR 480 VAC (UNGROUNDED CONDUCTOR) WITH GROUNDED CONDUCTOR AND WITH EQUIPMENT GROUNDING CONDUCTOR

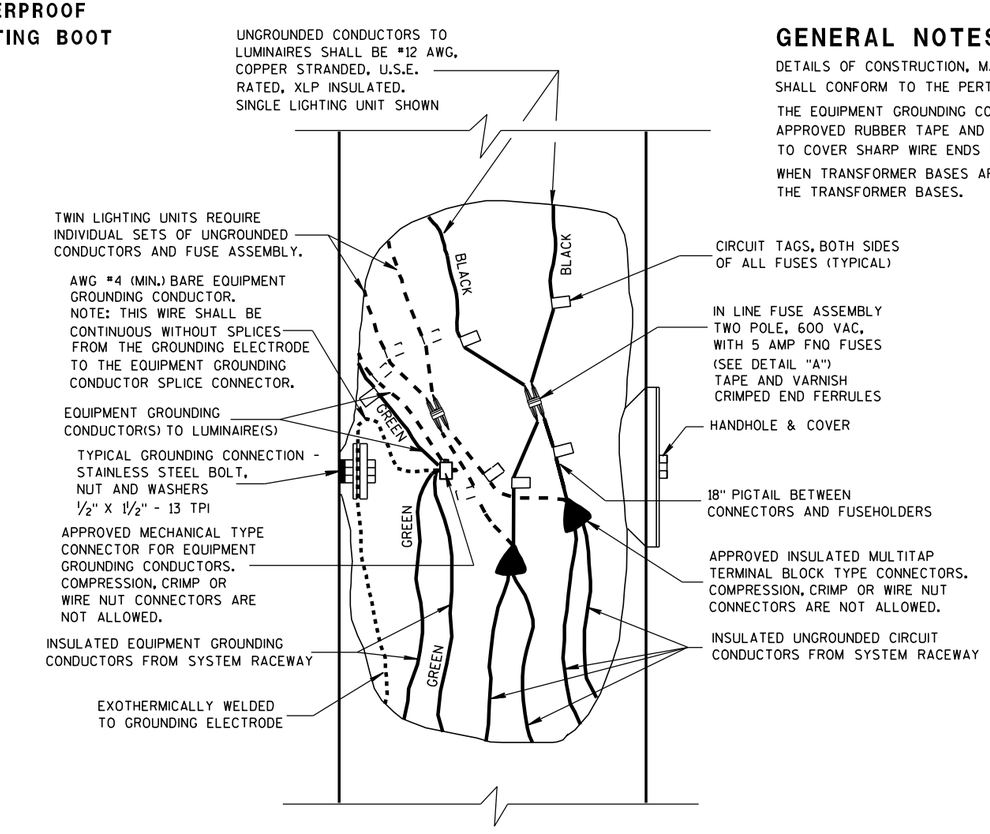

2 WIRE - 240 OR 480 VAC (UNGROUNDED CONDUCTORS) WITH EQUIPMENT GROUNDING CONDUCTOR

NON-FREEWAY LIGHTING UNIT POLE WIRING

STATE OF WISCONSIN
DEPARTMENT OF TRANSPORTATION

APPROVED
3/2/2011 — DATE
/S/ Thomas J. Gaspian — STATE ELECTRICAL ENGI
HWYS
FHWA

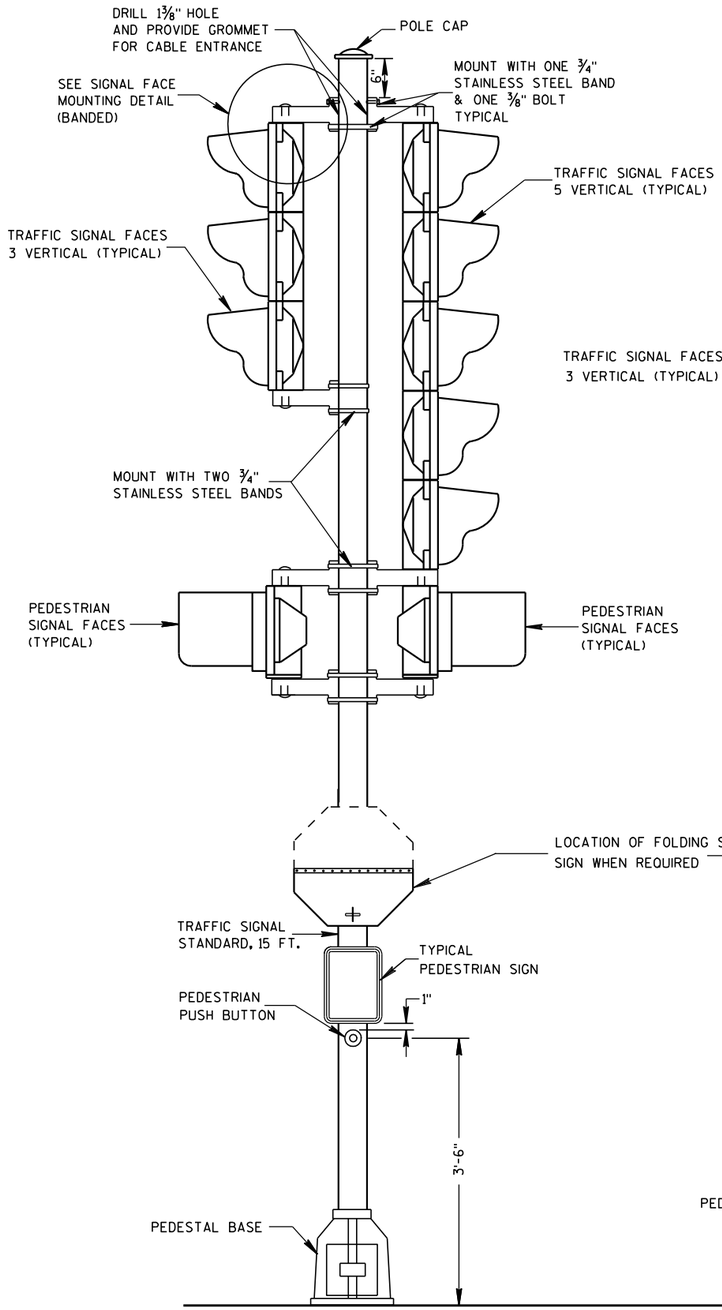

TRAFFIC SIGNAL STANDARD-15 FT.

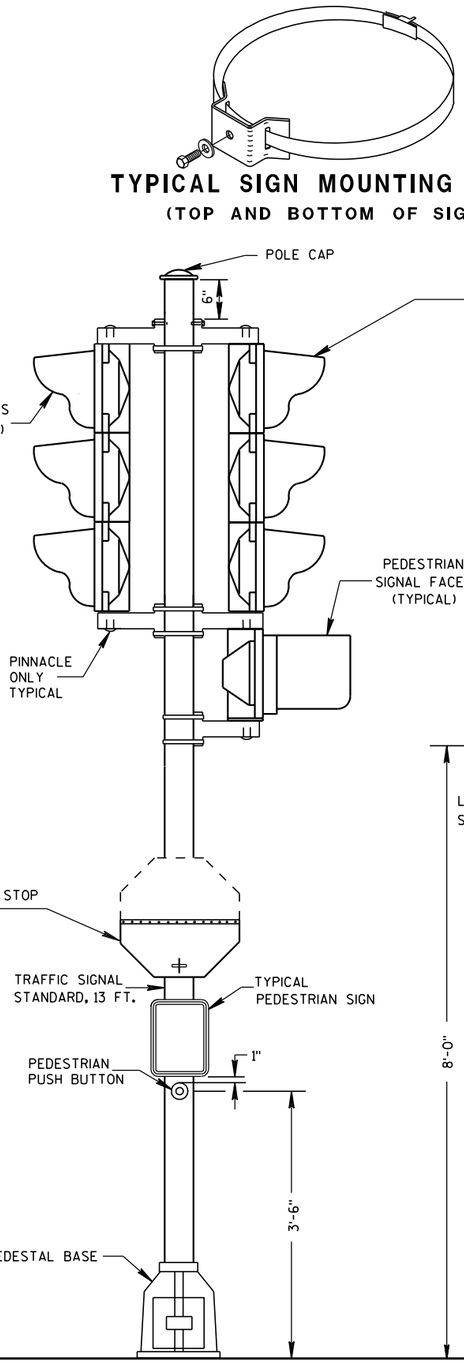

TRAFFIC SIGNAL STANDARD-13 FT.

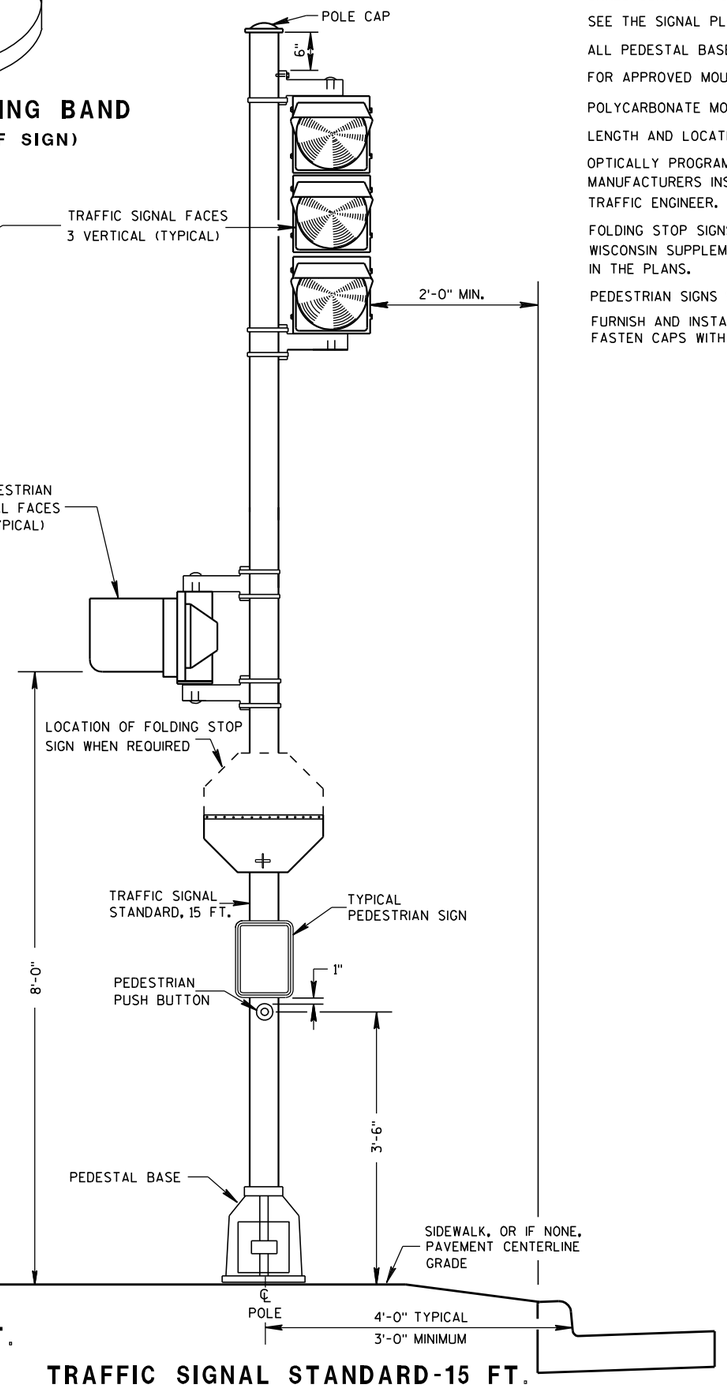

TRAFFIC SIGNAL STANDARD-15 FT.
3M MOUNTING (TYPICAL)

TYPICAL SIGN MOUNTING BAND
(TOP AND BOTTOM OF SIGN)

GENERAL NOTES

DETAILS OF CONSTRUCTION, MATERIALS AND WORKMANSHIP NOT SHOWN ON THIS DRAWING SHALL CONFORM TO THE PERTINENT REQUIREMENTS OF THE CONTRACT.

SEE THE SIGNAL PLAN FOR REQUIRED SIGNAL FACE SIZES.

ALL PEDESTAL BASES SHALL BE MOUNTED ON CONCRETE BASE - TYPE 1.

FOR APPROVED MOUNTING HARDWARE, SEE THE CONTRACT SPECIAL PROVISIONS.

POLYCARBONATE MOUNTING BRACKETS SHALL BE USED.

LENGTH AND LOCATION OF TRAFFIC SIGNAL STANDARDS SHALL BE AS SHOWN ON THE PLANS.

OPTICALLY PROGRAMMED SIGNAL FACES SHALL BE MASKED IN ACCORDANCE WITH MANUFACTURERS INSTRUCTIONS, AND UNDER THE DIRECTIONS OF THE DISTRICT TRAFFIC ENGINEER.

FOLDING STOP SIGNS SHALL BE IN ACCORDANCE WITH THE MUTCD AND/OR THE LATEST WISCONSIN SUPPLEMENT. THE SIGNS SHALL BE SIZED AND LOCATED AS CALLED FOR IN IN THE PLANS.

PEDESTRIAN SIGNS SHALL BE AS DESIGNATED IN THE PLANS.

FURNISH AND INSTALL VENTILATED, CAST, METALLIC (ALUMINUM ALLOY) CAPS. FASTEN CAPS WITH ONE (1) ¼" X ¾" - 20 TPI STAINLESS STEEL, HEX HEAD BOLT.

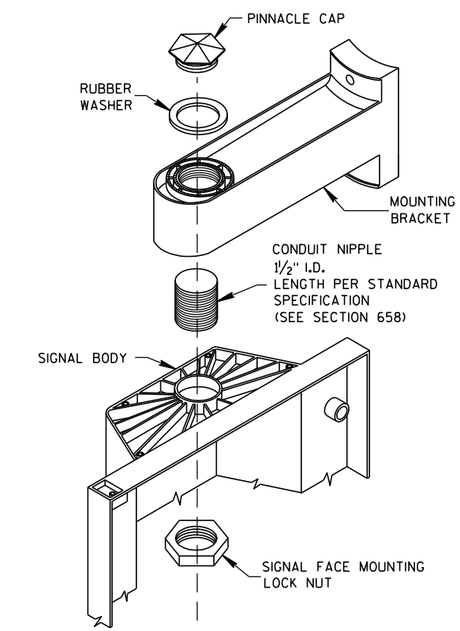

SIGNAL FACE MOUNTING DETAIL
(BANDED)

TRAFFIC SIGNAL STANDARD POLY BRACKET MOUNTINGS (TYPICAL) 13 FT. OR 15 FT.

STATE OF WISCONSIN
DEPARTMENT OF TRANSPORTATION

APPROVED
5/11/10 — DATE
/S/ John Corbin — STATE ELECTRICAL ENGI
HWYS
FHWA

6

S.D.D. 9 E 6-4

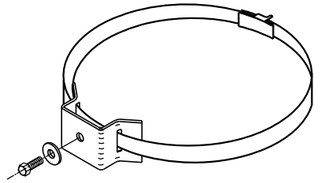

TYPICAL SIGN MOUNTING BAND

(TOP AND BOTTOM OF SIGN)

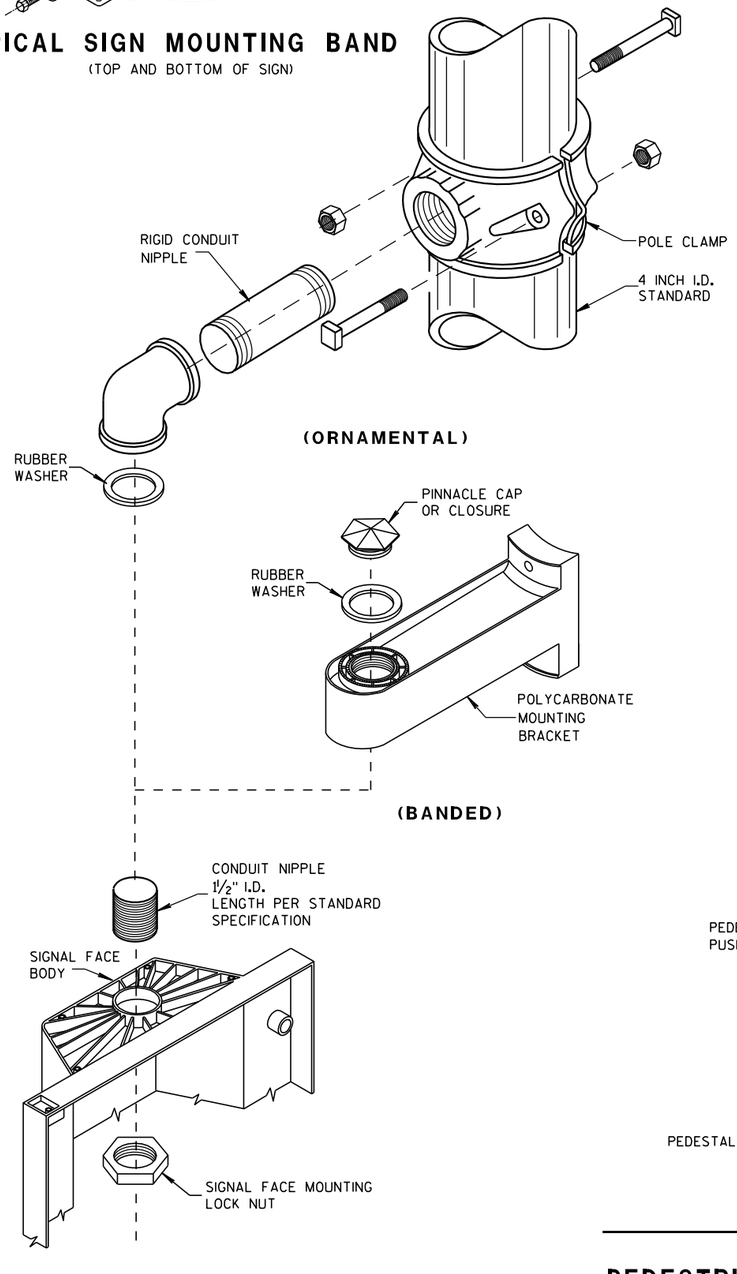

SIGNAL FACE MOUNTING DETAILS

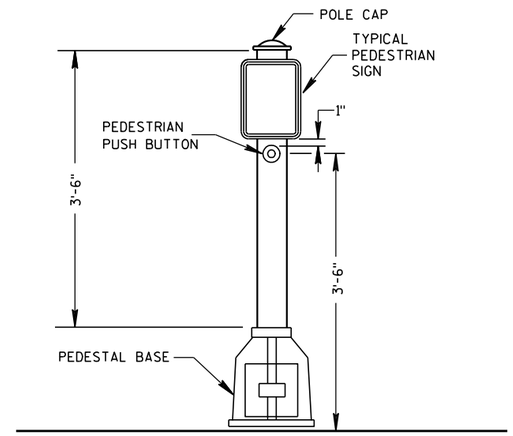

PEDESTRIAN PUSH BUTTON TYPICAL MOUNTING

GENERAL NOTES

DETAILS OF CONSTRUCTION, MATERIALS AND WORKMANSHIP NOT SHOWN ON THIS DRAWING SHALL CONFORM TO THE PERTINENT REQUIREMENTS OF THE CONTRACT.

SEE THE SIGNAL PLAN FOR REQUIRED SIGNAL FACE SIZES.

LOCATIONS SHALL BE AS SHOWN ON THE PLANS.

ALL PEDESTAL BASES SHALL BE MOUNTED ON CONCRETE BASE - TYPE 1.

FOR APPROVED MOUNTING HARDWARE, SEE THE CONTRACT SPECIFICATIONS.

POLYCARBONATE SIGNAL FACE MOUNTING BRACKETS SHALL BE USED UNLESS ORNAMENTAL POLE CLAMPS ARE SPECIFIED.

LENGTH OF TRAFFIC STANDARDS SHALL BE AS SHOWN ON THE PLANS.

MOUNTINGS AND BRACKETS SHALL BE AS SHOWN ON THE PLANS OR DESCRIBED IN THE SPECIAL PROVISIONS (BY THE DISTRICT TRAFFIC ENGINEER).

PEDESTRIAN SIGNS SHALL BE AS DESIGNATED IN THE PLANS.

FURNISH AND INSTALL VENTILATED, CAST, METALLIC (ALUMINUM ALLOY) CAPS. FASTEN CAPS WITH ONE (1) ¼" X ¾" - 20 TPI STAINLESS STEEL, HEX HEAD BOLT.

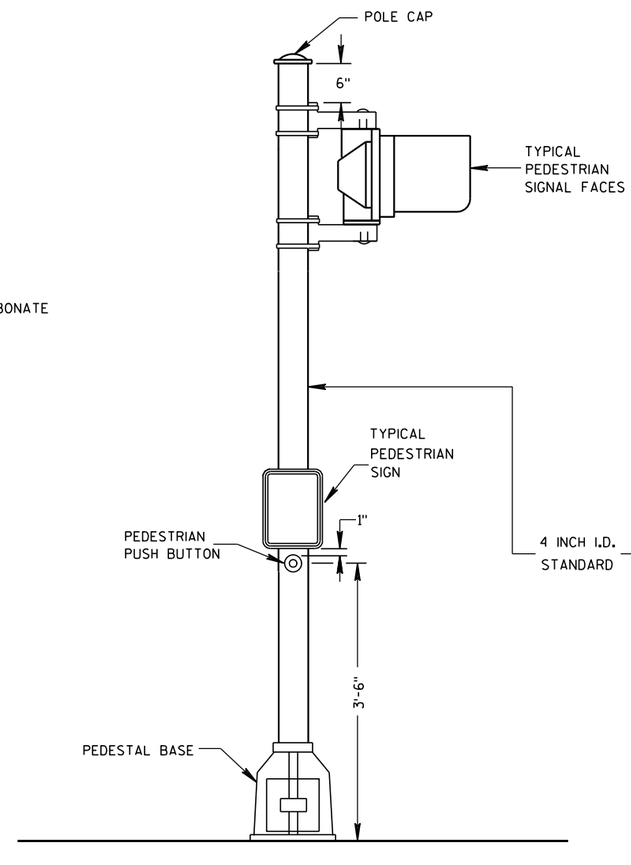

PEDESTRIAN FACE STANDARD-10 FT.

(WALK-DON'T WALK)

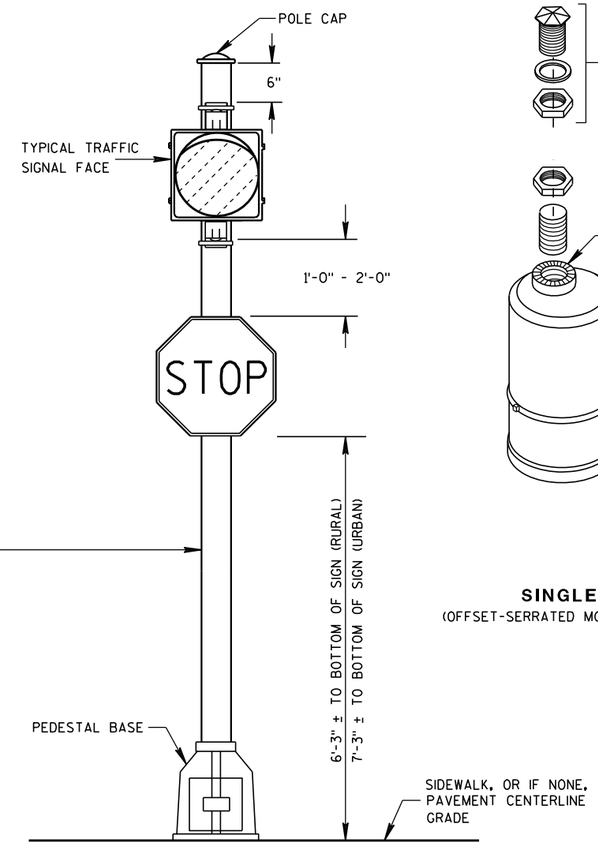

STANDARD FLASHER.

10 FOOT, 13 FOOT OR 15 FOOT AS REQUIRED

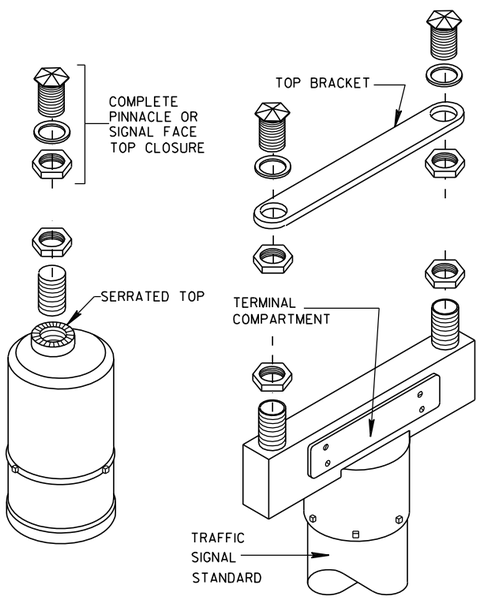

SINGLE
(OFFSET-SERRATED MOUNTING)

DOUBLE
(SERRATED MOUNTING)

SLIPFITTERS

TRAFFIC SIGNAL STANDARD PEDESTRIAN AND FLASHER TYPICAL MOUNTING DETAILS

STATE OF WISCONSIN
DEPARTMENT OF TRANSPORTATION

APPROVED

5/11/10 — DATE
/S/ John Corbin — STATE ELECTRICAL ENGI
HWYS
FHWA

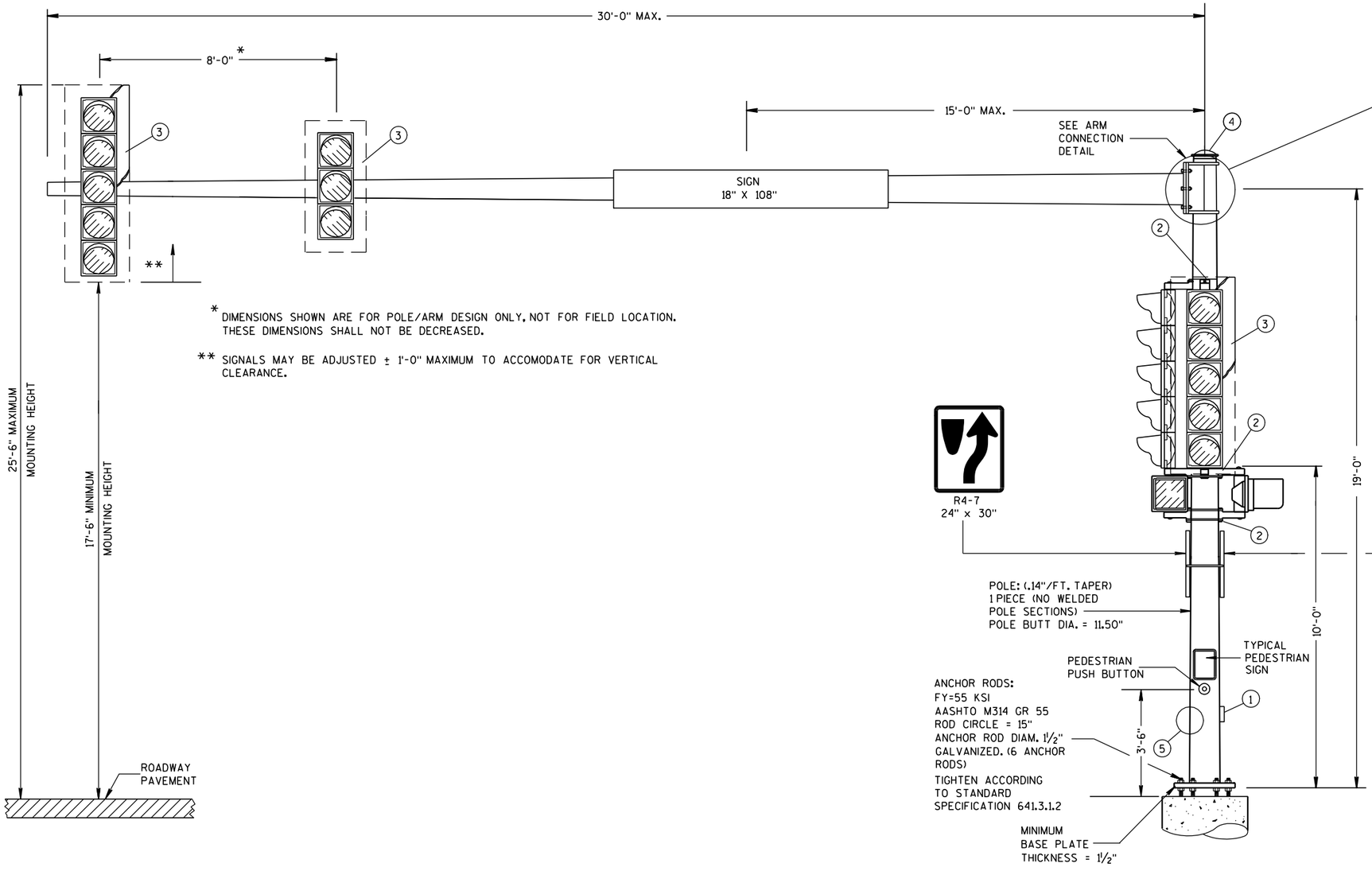

* DIMENSIONS SHOWN ARE FOR POLE/ARM DESIGN ONLY, NOT FOR FIELD LOCATION. THESE DIMENSIONS SHALL NOT BE DECREASED.

** SIGNALS MAY BE ADJUSTED ± 1'-0" MAXIMUM TO ACCOMODATE FOR VERTICAL CLEARANCE.

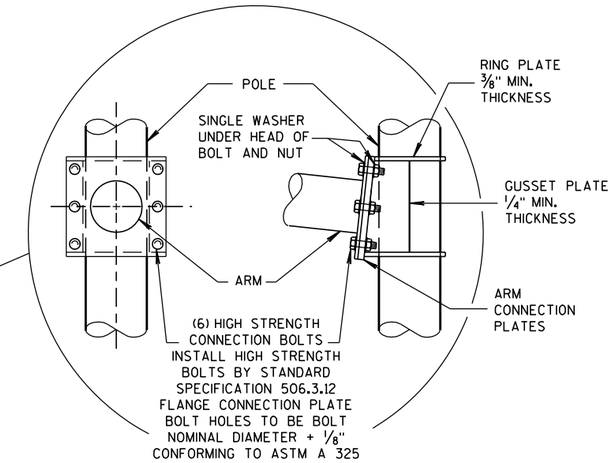

6 BOLT ARM CONNECTION DETAIL

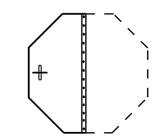

FOLDING STOP SIGN 30" x 30"

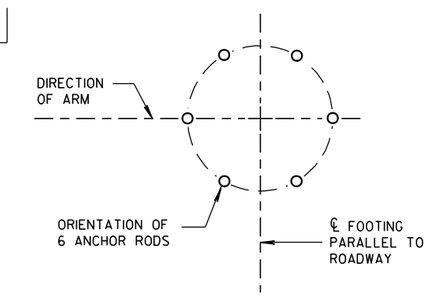

ANCHOR ROD LOCATION

(MAXIMUM LOAD)

TYPE 9 POLE 15'- 30' MONOTUBE ARM

TYPE 9 POLE
15' - 30' MONOTUBE ARM

STATE OF WISCONSIN
DEPARTMENT OF TRANSPORTATION

APPROVED
3/2/2011 — DATE
/S/ Thomas J. Cerplas — STATE ELECTRICAL ENGI
HWYS
FHWA

6

S.D.D. 9 E 8-4a

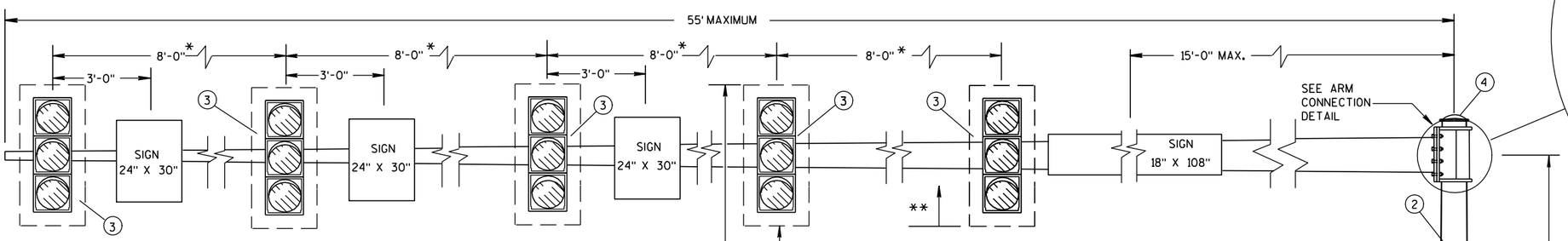

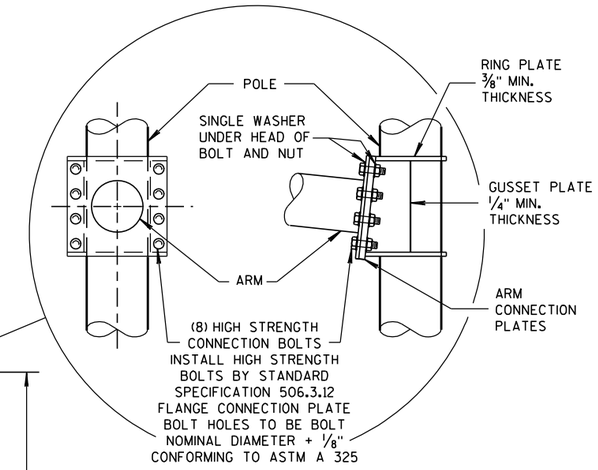

8 BOLT ARM CONNECTION DETAIL

* DIMENSIONS SHOWN ARE FOR POLE/ARM DESIGN ONLY, NOT FOR FIELD LOCATION. THESE DIMENSIONS SHALL NOT BE DECREASED.

** SIGNALS MAY BE ADJUSTED ± 1'-0" MAXIMUM TO ACCOMODATE FOR VERTICAL CLEARANCE.

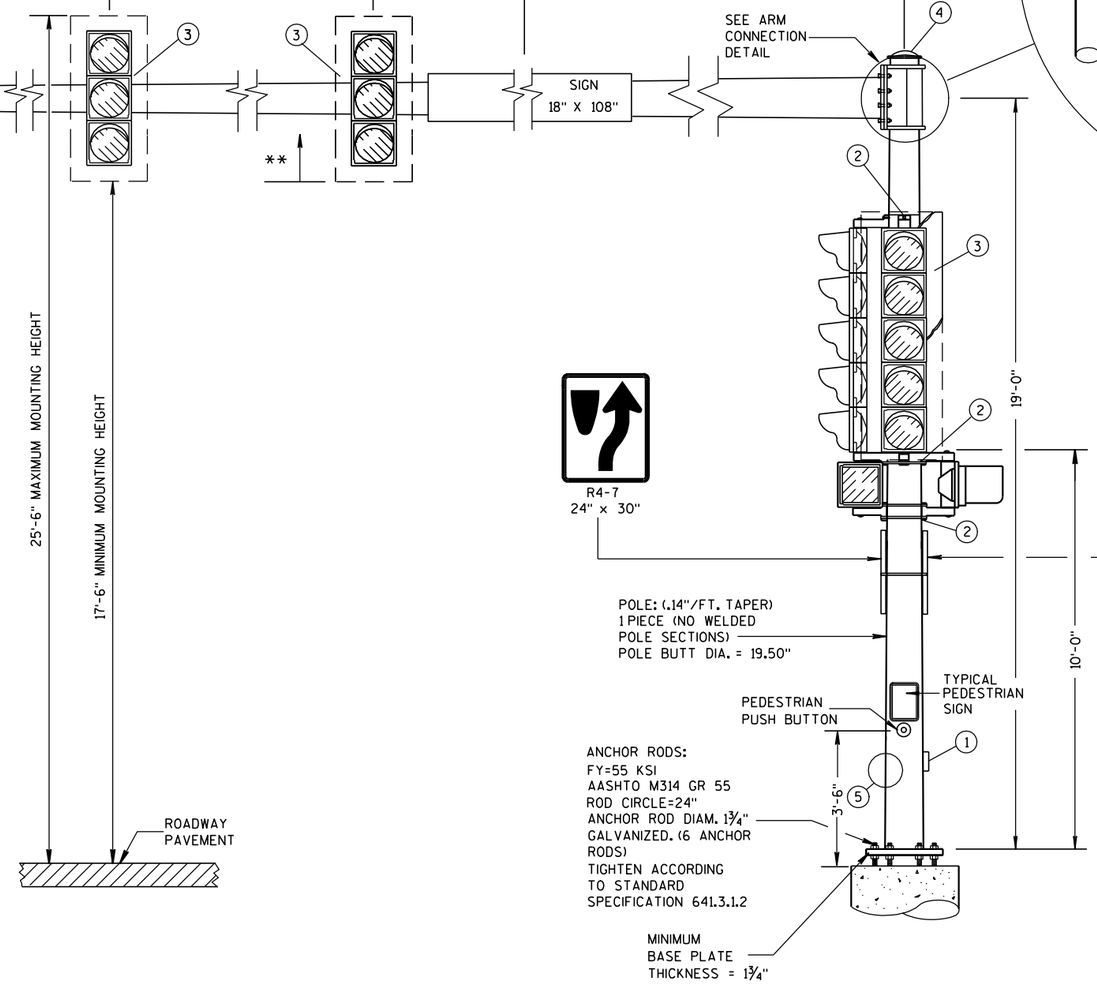

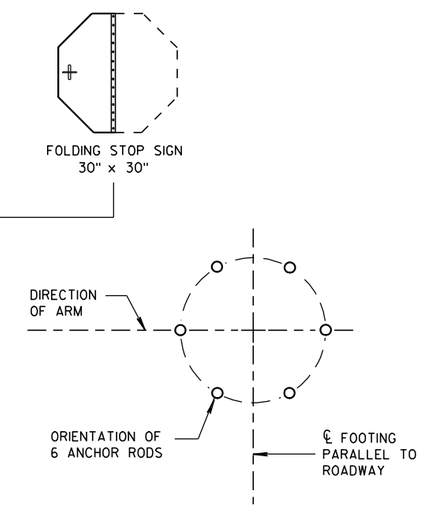

ANCHOR ROD LOCATION

(MAXIMUM LOAD)

TYPE 12 POLE 35'- 55' MONOTUBE ARM

TYPE 12 POLE
35' - 55' MONOTUBE ARM

STATE OF WISCONSIN
DEPARTMENT OF TRANSPORTATION

APPROVED
3/2/2011 — DATE
/S/ Thomas J. Gonring — STATE ELECTRICAL ENGI — HWYS
FHWA

6

6

S.D.D. 9 E 8-4c

S.D.D. 9 E 8-4c

GENERAL NOTES

DETAILS OF CONSTRUCTION, MATERIALS AND WORKMANSHIP NOT SHOWN ON THIS DRAWING SHALL CONFORM TO THE PERTINENT REQUIREMENTS OF THE CONTRACT.

POLE TYPES 9 AND 10 ARE FOR ARM LENGTHS 15-FOOT TO 30-FOOT.

POLE TYPES 12 AND 13 ARE FOR ARM LENGTHS 35-FOOT TO 55-FOOT.

MONOTUBE POLE AND ARM SHALL BE GALVANIZED STEEL.

RING-STIFFENED BUILT-UP BOX TYPE OF ATTACHMENT FOR TRAFFIC SIGNAL ARM.

ONE (1) PIECE POLE CONSTRUCTION (NO WELDED POLE SECTIONS).

STANDARD STRAIGHT ARM DESIGN (3 % ± RISE).

SECTION 657, POLES OF THE STANDARD SPECIFICATIONS SHALL APPLY TO THIS DRAWING.

PROVIDE WIREWAY THRU POLE WALL AND ARM CONNECTION PLATES. PROVIDE ROUND, SMOOTH INSIDE SURFACE.

MANUFACTURER'S SUBMITTED POLE DESIGNS AND DRAWINGS SHALL BE SIGNED AND STAMPED BY A REGISTERED PROFESSIONAL ENGINEER AND CERTIFIED AS BEING IN COMPLIANCE WITH THE LATEST AASHTO AND ALL PERTINENT WISDOT SPECIFICATIONS AND DRAWINGS FOR TRAFFIC AND LIGHTING STRUCTURES AND AS FOLLOWS:

- CATEGORY III FATIGUE LOADS OF GALLOPING, TRUCK GUSTS (AT 45 MPH VEHICLE VELOCITY) AND NATURAL WIND GUSTS FOR DESIGN OF TYPE 9 AND TYPE 10 STRUCTURES.
- CATEGORY II FATIGUE LOADS OF GALLOPING, TRUCK GUSTS (AT 45 MPH VEHICLE VELOCITY) AND NATURAL WIND GUSTS FOR DESIGN OF TYPE 12 AND TYPE 13 STRUCTURES.
- 90 MPH (3-SECOND GUST) WIND SPEED AND A 50 YEAR DESIGN LIFE.

SECURE THE OPENING BELOW THE BASE PLATE WITH STAINLESS STEEL OR GALVANIZED STEEL MESH AND SECURE THE MESH WITH ¾" S.S. BANDING AROUND THE LEVELING NUTS.

INDENT PRINT (NOMINAL ½" HIGH) THE POLE LENGTH AND FIRST TWO LETTERS OF THE MANUFACTURERS NAME ON TWO SIDES OF THE BASE PLATE 180 DEGREES APART, BEFORE GALVANIZING. THE ARM SHALL BE IDENTIFIED WITH THE SAME INFORMATION BY INDENT PRINT.

SIGNAL FACE SHALL BE MOUNTED 6 INCHES (NOMINAL) FROM THE END OF THE MONOTUBE ARM OR AS SHOWN ON THE PLAN CONSTRUCTION DETAIL OR AS DIRECTED BY THE PROJECT ENGINEER/ELECTRICAL OPERATIONS PERSONNEL. MOUNT ALL LIKE HEADS AT SAME ELEVATION.

SIGN MOUNTING BRACKETS SHALL BE FURNISHED IN ACCORDANCE WITH SECTION 637 OF THE STANDARD SPECIFICATIONS FOR HIGHWAY AND STRUCTURE CONSTRUCTION.

(1) DESIGN FOR MAXIMUM ALLOWABLE HANDHOLE WITH COVER ASSEMBLY WITH TWO ¼" X ¾" - 20 TPI STAINLESS STEEL HEX HEAD BOLTS.

(2) SIGNAL MOUNTING BRACKETS FOR POLE MOUNTING, MOUNT WITH CAP SCREW AND BANDING, (SEE SPECIFICATIONS SEC. 658).

(3) SECURELY MOUNT BACKPLATES, PROJECTING 5" BEYOND ALL SIDES OF THE SIGNAL FACE HOUSING, PER MANUFACTURERS RECOMMENDATIONS.

(4) THE TOP OF THE POLE SHAFT AND THE END OF THE MONOTUBE ARM SHALL BE EQUIPPED WITH A REMOVABLE, VENTILATED CAP HELD SECURELY IN PLACE WITH SET SCREWS.

(5) FACTORY-WELDED BRACKET FOR GROUNDING LUG, OPPOSITE HANDHOLE, (LUG AND HARDWARE PAID UNDER SEPARATE ITEM). PROVIDE HOLE IN BRACKET FOR ¼" X ¾" - 20 TPI STAINLESS STEEL HEX HEAD BOLT.

(6) FACTORY-WELDED "J" HOOK FOR STRAIN RELIEF FOR POLE LUMINAIRE WIRE.

(7) INSTALL DEPARTMENT PROVIDED STRUCTURAL IDENTIFICATION PLAQUES.

STRUCTURAL IDENTIFICATION PLAQUES SHALL BE PLACED ON THE POLES IN THE SAME DIRECTION AS THE ARM.

MOUNTING HEIGHT SHALL BE 5'-0" ABOVE THE CURB OR SHOULDER . ADJUST IF IT IS KNOWN THAT REQUIRED TRAFFIC SIGNS WILL BE OBSTRUCTED.

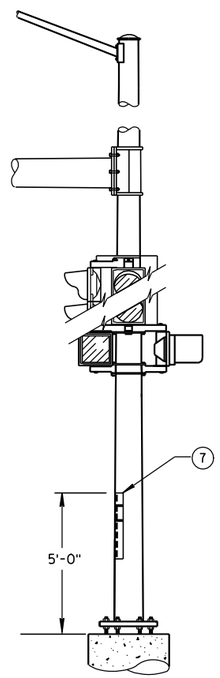

STRUCTURAL IDENTIFICATION PLAQUE PLACEMENT

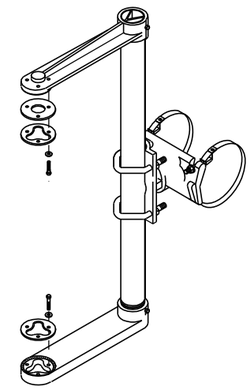

SIGNAL FACE MOUNTING BRACKET DETAIL FOR MONOTUBE ARM

(MOUNT PER MANUFACTURER'S RECOMMENDATION)

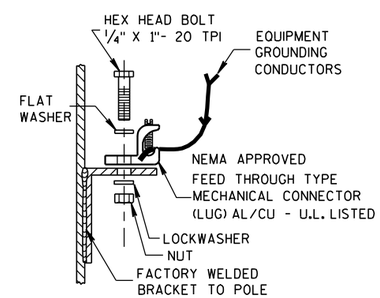

TYPICAL GROUNDING CONNECTIONS (5)

NUT, BOLT AND WASHERS SHALL BE STAINLESS STEEL

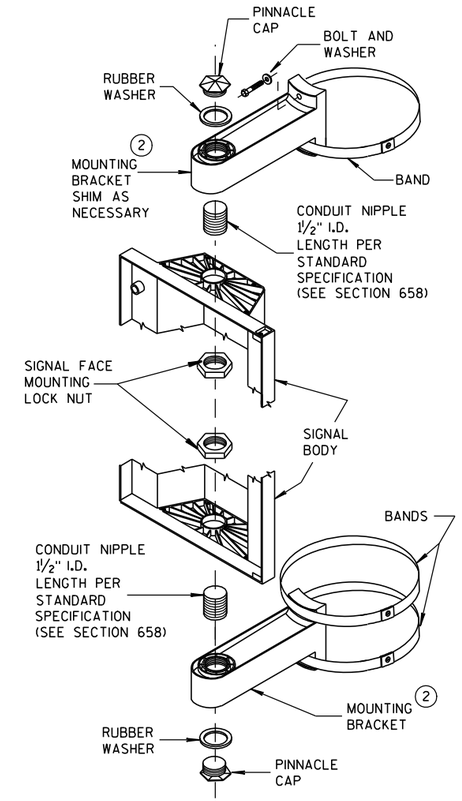

SIGNAL FACE VERTICAL MOUNTING DETAIL

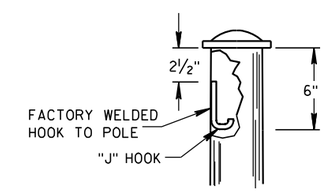

"J" HOOK WIRE SUPPORT (6)

GENERAL NOTES AND HARDWARE DETAILS FOR TYPE 9, 10, 12 & 13 POLES WITH MONOTUBE ARMS

STATE OF WISCONSIN
DEPARTMENT OF TRANSPORTATION

APPROVED

3/2/2011 — DATE

/S/ Thomas J. Cannon — STATE ELECTRICAL ENGI — HWYS

FHWA

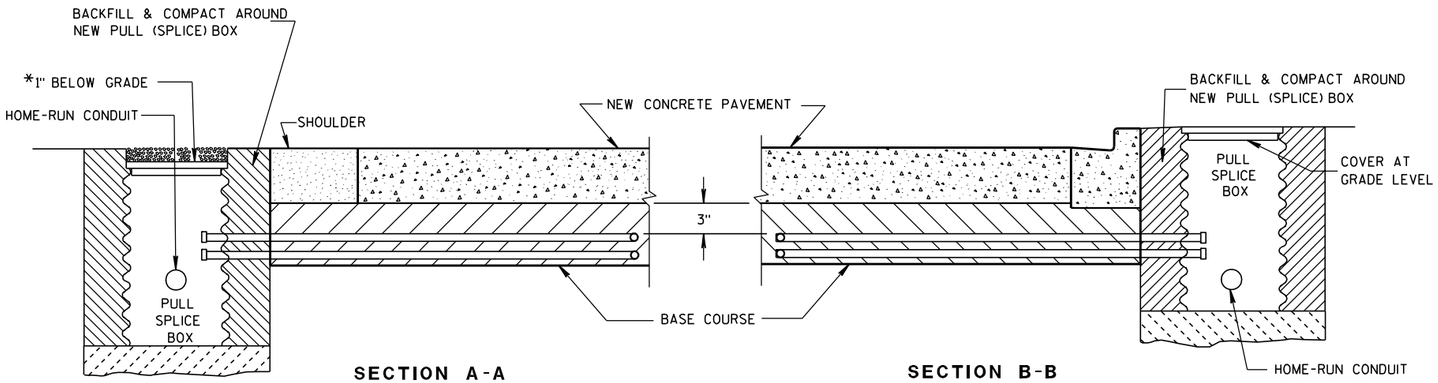

SECTION A-A
NO CURB & GUTTER

SECTION B-B
CURB & GUTTER

*RECESS PULL (SPLICE) BOX SO THAT THE COVER IS 3" BELOW GRADE IN SHOULDER AREAS OF CRUSHED AGGREGATE. BACKFILL OVER COVER WITH THE CRUSHED AGGREGATE TO BRING THE AREA TO GRADE LEVEL.

LOOP DETECTOR INSTALLATION DETAIL

GENERAL NOTES

DETAILS OF CONSTRUCTION, MATERIALS AND WORKMANSHIP NOT SHOWN ON THIS DRAWING SHALL CONFORM TO THE PERTINENT REQUIREMENTS OF THE CONTRACT.

LOOP SIZE, CONFIGURATION LOCATION, NUMBER OF TURNS OF WIRE AND ASSOCIATED SIGNAL PHASE SHALL BE AS SHOWN ON THE PLANS.

PITCH LEAD OUT CONDUIT TO DRAIN TO ROADSIDE PULL (SPLICE) BOX.

SPLICES SHALL BE INSTALLED BY USING CAST IN PLACE SPLICE KITS SUCH AS 3M TYPE 82A1 OR APPROVED EQUAL. NON-INSULATED BUTT SPLICES TO FIT #12 AWG STRANDED WIRE SHALL BE USED. SPLICES SHALL BE SOLDERED AND INSULATED FROM EACH OTHER AS PER INSTRUCTIONS INCLUDED IN THE SPLICE KIT.

MEASURE GROUND RESISTANCE USING A MEGGER. REPLACE LOOP WIRE NOT ATTAINING A READING OF INFINITY TO GROUND.

AFTER SPLICING THE LOOP WIRE TO THE LOOP LEAD-IN CABLE, THE CONTRACTOR SHALL MEASURE INDUCTANCE, GROUND RESISTANCE AND WIRE RESISTANCE AT THE CABINET END OF THE LEAD-IN CABLE AND FURNISH A COPY OF THE READINGS TO THE PROJECT ENGINEER FOR EVALUATION.

LOOP DETECTOR LEADS SHALL BE IDENTIFIED WITH THEIR ASSOCIATED LOOP BY USE OF WATERPROOF TAGS AT BOTH ENDS OF THE CABLE. A LISTING OF THE CABLE IDENTIFICATION PER INDIVIDUAL LOOP LEAD-IN SHALL BE PLACED IN THE CABINET.

THE #12 AWG. LOOP WIRE IN THE PULL (SPLICE) BOX SHALL BE HAND TWISTED AT LEAST 3 TWISTS PER FOOT BEFORE BEING SPLICED TO THE LOOP LEAD-IN CABLE.

SPLICES OF LOOP WIRE TO LEAD-IN CABLE SHALL BE MADE ONLY IN PULL (SPLICE) BOXES AT THE SIDE OF THE ROAD.

THE #12 AWG LOOP WIRE SHALL BE INSTALLED FROM THE ROADSIDE PULL (SPLICE) BOX, THROUGH THE LOOP CONDUIT, BACK TO THE ROADSIDE PULL (SPLICE) BOX, AND BE INSTALLED IN ONE, NON-SPLICED CONTINUOUS LENGTH.

PROTECTION OF THE CONDUITS IN THE BASE COURSE SHALL BE REQUIRED AFTER INSTALLATION AND BEFORE NEW PAVEMENT IS INSTALLED.

SHOULD INSTALLATION REPAIR BE REQUIRED, IT SHALL BE DONE UNDER THE DIRECTION OF THE PROJECT ENGINEER.

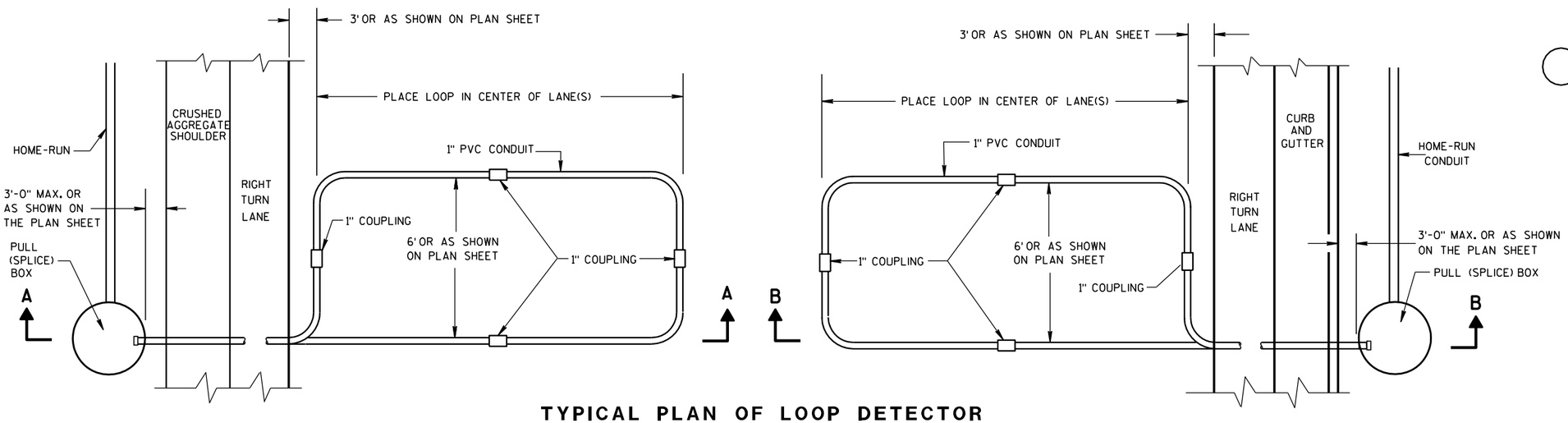

TYPICAL PLAN OF LOOP DETECTOR WITH 24" PULL (SPLICE) BOX

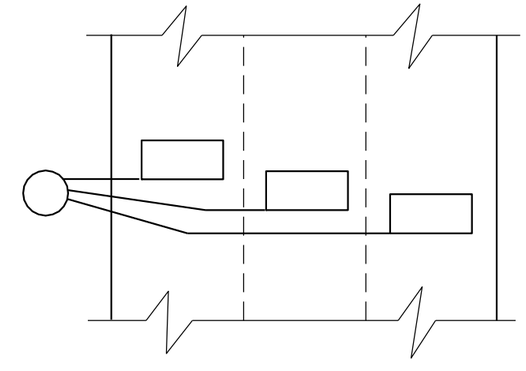

MULTI-LANE INSTALLATION

LOOP DETECTOR INSTALLED IN BASE COURSE WITH PULL (SPLICE) BOX OFF ROADWAY (OPTION 2)
STATE OF WISCONSIN DEPARTMENT OF TRANSPORTATION
APPROVED 6/7/06 DATE /S/ Balu Ananthanarayanan STATE ELECTRICAL ENGI HWYS FHWA

6

6

S.D.D. 9 F 15-3b

S.D.D. 9 F 15-3b

GENERAL NOTES

DETAILS OF CONSTRUCTION, MATERIALS AND WORKMANSHIP NOT SHOWN ON THIS DRAWING SHALL CONFORM TO THE PERTINENT REQUIREMENTS OF THE CONTRACT.

1. WOOD POLES SHALL BE CLASS 4. LENGTH DETERMINED BY SIGNAL PLAN.

2. SIGNAL FACES:
   A. ALL SECTIONS SHALL BE 12" AND POLYCARBONATE.
   B. EACH SHALL CONTAIN A 5" WIDE DULL BLACK POLYCARBONATE BACKPLATE.
   C. EACH SHALL BE WIRED FROM THE TOP SIGNAL MOUNTING BRACKET.
   D. NEAR RIGHT SIGNAL FACE SUSPENDED ON THE TETHER (NO BACKPLATE) SHALL NOT BE OVER THE TRAVELED WAY. IF THE POLE IS WITHIN 5 FEET OF THE TRAVELED WAY MOUNT THE SIGNAL FACE ON THE WOOD POLE WITH BACKPLATE.

3. SPAN WIRE:
   A. EACH SPAN WIRE SHALL BE INDIVIDUALLY DOWN GUYED.
   B. SIGNAL AND LIGHTING CABLES SHALL ONLY BE ATTACHED TO THE UPPER SPAN WIRE.
   C. THE SIGNAL ASSEMBY SHALL HAVE A 17' MIN. HEIGHT ABOVE THE ROADWAY. THIS SHALL BE MEASURED AFTER THE SPAN WIRE INSTALLATION IS COMPLETED WITH ALL CABLES AND SIGNAL FACES IN PLACE. MAINTAIN MINIMUM AND MAXIMUM HEIGHTS AS ROADWAY WORK PROGRESSES.

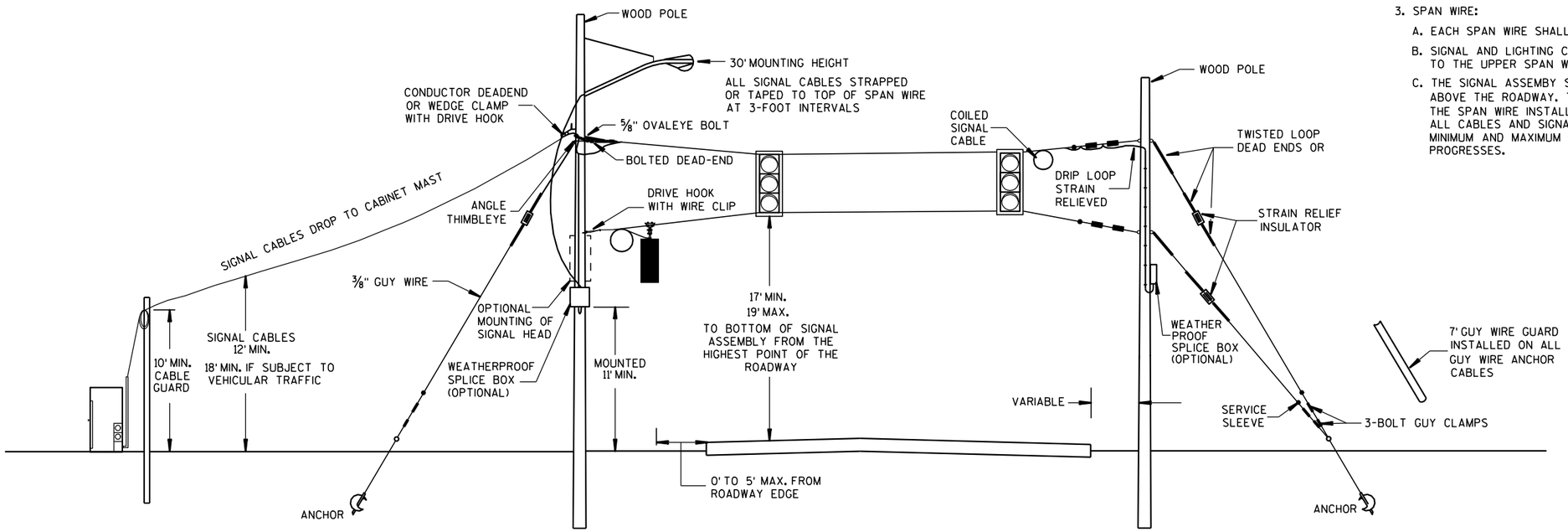

SPAN WIRE
TEMPORARY SIGNALS

MINIMUM POLE LENGTHS	POLE BURIEL DEPTHS
25'	5'
30'	6'
35'	7'
40'	8'
45'	9'

SPAN WIRE
TEMPORARY TRAFFIC SIGNAL

STATE OF WISCONSIN
DEPARTMENT OF TRANSPORTATION

APPROVED
7-14-08 — DATE
/S/ Balu Ananthar[illegible]n — STATE ELECTRICAL ENGI — HWYS
FHWA

6

S.D.D. 9 G 1-3a

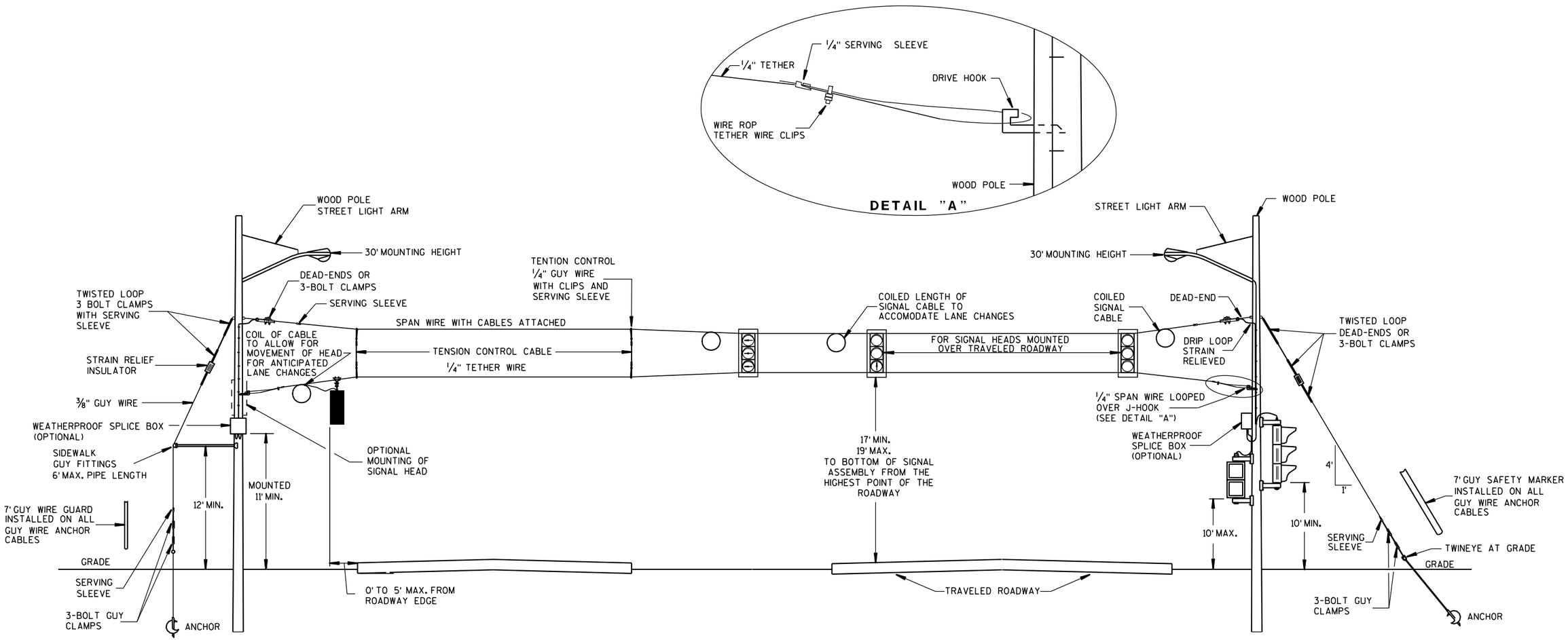

GENERAL NOTES

DETAILS OF CONSTRUCTION, MATERIALS AND WORKMANSHIP NOT SHOWN ON THIS DRAWING SHALL CONFORM TO THE PERTINENT REQUIREMENTS OF THE CONTRACT.

1. WOOD POLES SHALL BE CLASS 4. LENGTH DETERMINED BY SIGNAL PLAN.
2. SIGNAL FACES:
   A. ALL SECTIONS SHALL BE 12" AND POLYCARBONATE.
   B. EACH SHALL CONTAIN A 5" WIDE DULL BLACK POLYCARBONATE BACKPLATE.
   C. EACH SHALL BE WIRED FROM THE TOP SIGNAL MOUNTING BRACKET.
   D. NEAR RIGHT SIGNAL FACE SUSPENDED ON THE TETHER (NO BACKPLATE) SHALL NOT BE OVER THE TRAVELED WAY. IF THE POLE IS WITHIN 5 FEET OF THE TRAVELED WAY MOUNT THE SIGNAL FACE ON THE WOOD POLE WITH BACKPLATE.
   E. FAR INDICATION SHALL BE MAINTAINED OVER CENTER OF TRAFFIC LANE.
3. SPAN WIRE:
   A. EACH SPAN WIRE SHALL BE INDIVIDUALLY DOWN GUYED.
   B. SIGNAL AND LIGHTING CABLES SHALL ONLY BE ATTACHED TO THE UPPER SPAN WIRE.
   C. THE SIGNAL ASSEMBY SHALL HAVE A 17' MIN. HEIGHT ABOVE THE ROADWAY. THIS SHALL BE MEASURED AFTER THE SPAN WIRE INSTALLATION IS COMPLETED WITH ALL CABLES AND SIGNAL FACES IN PLACE. MAINTAIN MINIMUM AND MAXIMUM HEIGHTS AS ROADWAY WORK PROGRESSES.

SPAN WIRE
TEMPORARY SIGNALS
4 LANE ROADWAYS

MINIMUM POLE LENGTHS	CLASS	MIN. BURIAL DEPTHS
25'	V	5'
30'	V	6'
35'	IV	7'
40'	IV	8'
45'	IV	9'

SPAN WIRE
TEMPORARY TRAFFIC SIGNAL

STATE OF WISCONSIN
DEPARTMENT OF TRANSPORTATION

APPROVED

7-14-08 — DATE

/S/ Balu Ananthanarayanan — STATE ELECTRICAL ENGI

HWYS

FHWA

179

6

6

S.D.D. 9 G 1-3b

S.D.D. 9 G 1-3b

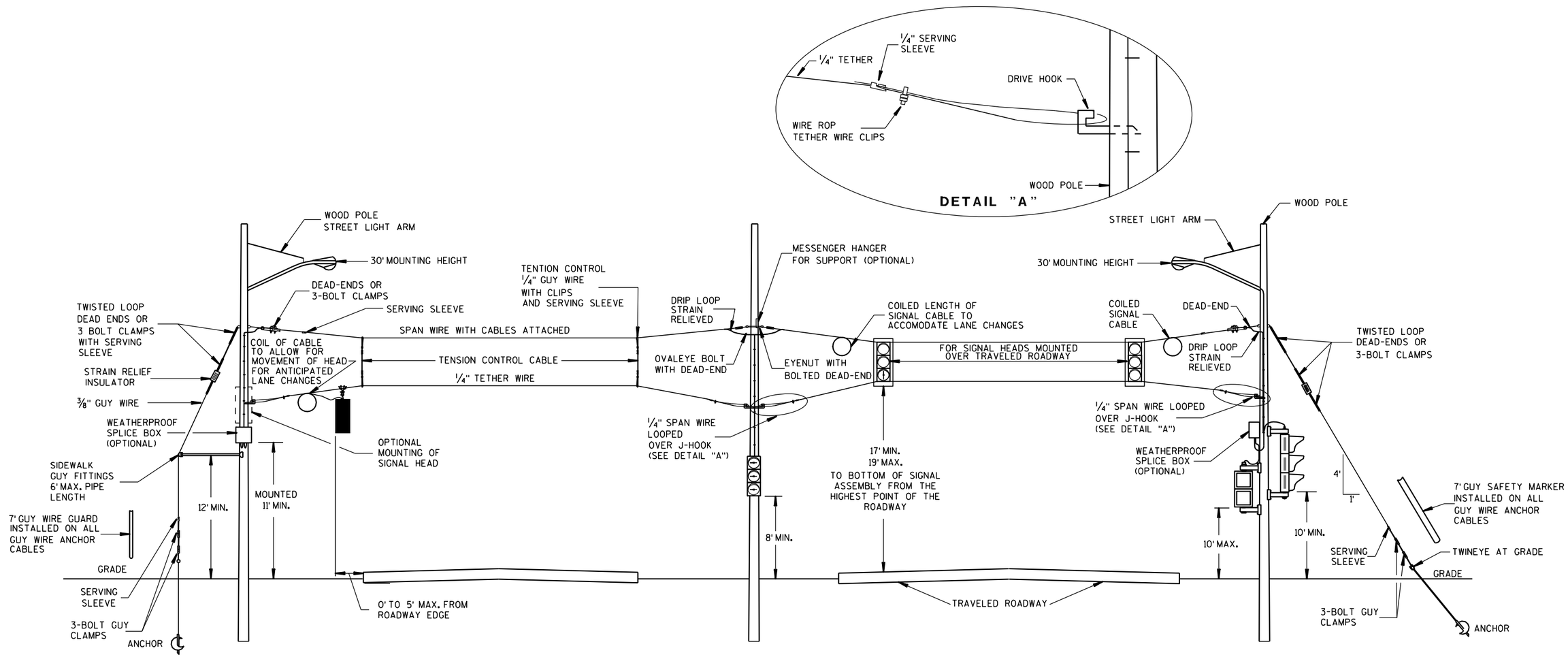

SPAN WIRE
TEMPORARY SIGNALS
4 LANE ROADWAYS

GENERAL NOTES

DETAILS OF CONSTRUCTION, MATERIALS AND WORKMANSHIP NOT SHOWN ON THIS DRAWING SHALL CONFORM TO THE PERTINENT REQUIREMENTS OF THE CONTRACT.

1. WOOD POLES SHALL BE CLASS 4. LENGTH DETERMINED BY SIGNAL PLAN.
2. SIGNAL FACES:
   A. ALL SECTIONS SHALL BE 12" AND POLYCARBONATE.
   B. EACH SHALL CONTAIN A 5" WIDE DULL BLACK POLYCARBONATE BACKPLATE.
   C. EACH SHALL BE WIRED FROM THE TOP SIGNAL MOUNTING BRACKET.
   D. NEAR RIGHT SIGNAL FACE SUSPENDED ON THE TETHER (NO BACKPLATE) SHALL NOT BE OVER THE TRAVELED WAY. IF THE POLE IS WITHIN 5 FEET OF THE TRAVELED WAY MOUNT THE SIGNAL FACE ON THE WOOD POLE WITH BACKPLATE.
   E. FAR INDICATION SHALL BE MAINTAINED OVER CENTER OF TRAFFIC LANE.
3. SPAN WIRE:
   A. EACH SPAN WIRE SHALL BE INDIVIDUALLY DOWN GUYED.
   B. SIGNAL AND LIGHTING CABLES SHALL ONLY BE ATTACHED TO THE UPPER SPAN WIRE.
   C. THE SIGNAL ASSEMBY SHALL HAVE A 17' MIN. HEIGHT ABOVE THE ROADWAY. THIS SHALL BE MEASURED AFTER THE SPAN WIRE INSTALLATION IS COMPLETED WITH ALL CABLES AND SIGNAL FACES IN PLACE. MAINTAIN MINIMUM AND MAXIMUM HEIGHTS AS ROADWAY WORK PROGRESSES.

MINIMUM POLE LENGTHS	CLASS	MIN. BURIAL DEPTHS
25'	V	5'
30'	V	6'
35'	IV	7'
40'	IV	8'
45'	IV	9'

SPAN WIRE
TEMPORARY TRAFFIC SIGNAL

STATE OF WISCONSIN
DEPARTMENT OF TRANSPORTATION

APPROVED
7-14-08 — DATE
/S/ Balu Ananthanarayanan — STATE ELECTRICAL ENGI 180 HWYS
FHWA

6

S.D.D. 9 G 1-3c

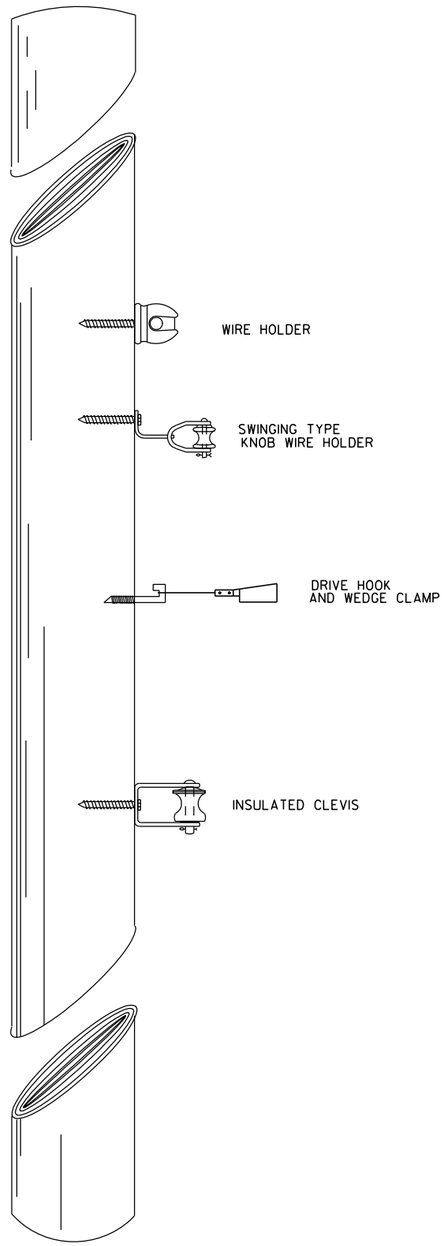

TYPICAL CABLE HANGERS

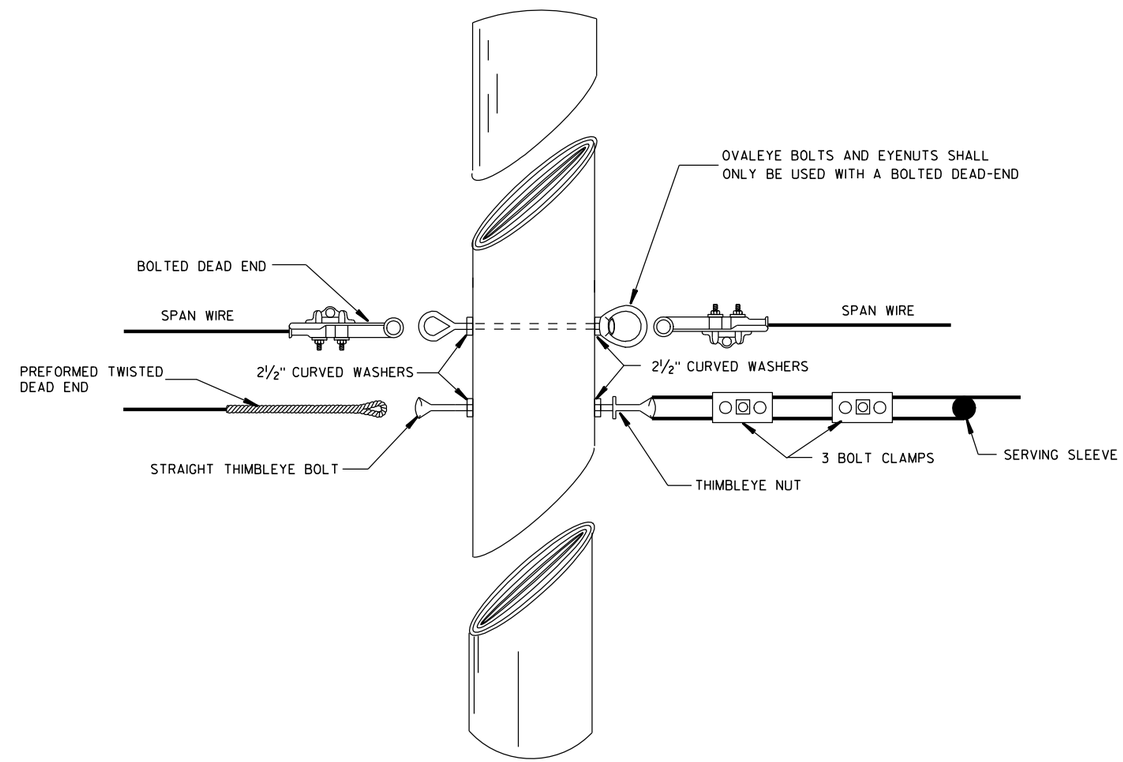

TYPICAL DEAD-ENDING

6

6

S.D.D. 9 G 1-3d

S.D.D. 9 G 1-3d

SPAN WIRE
TEMPORARY TRAFFIC SIGNAL

STATE OF WISCONSIN
DEPARTMENT OF TRANSPORTATION

APPROVED

7-14-08	/S/ Balu Ananthanarayanan
DATE	STATE ELECTRICAL ENGI 181 HWYS

FHWA

GENERAL NOTES

1. USE 3/4" DRILL IN WOOD POLE TO PROVIDE HOLE FOR 5/8" BOLTS.
2. SAFTY LOOP REQUIRED ON EACH END OF ALL SPAN WIRES.

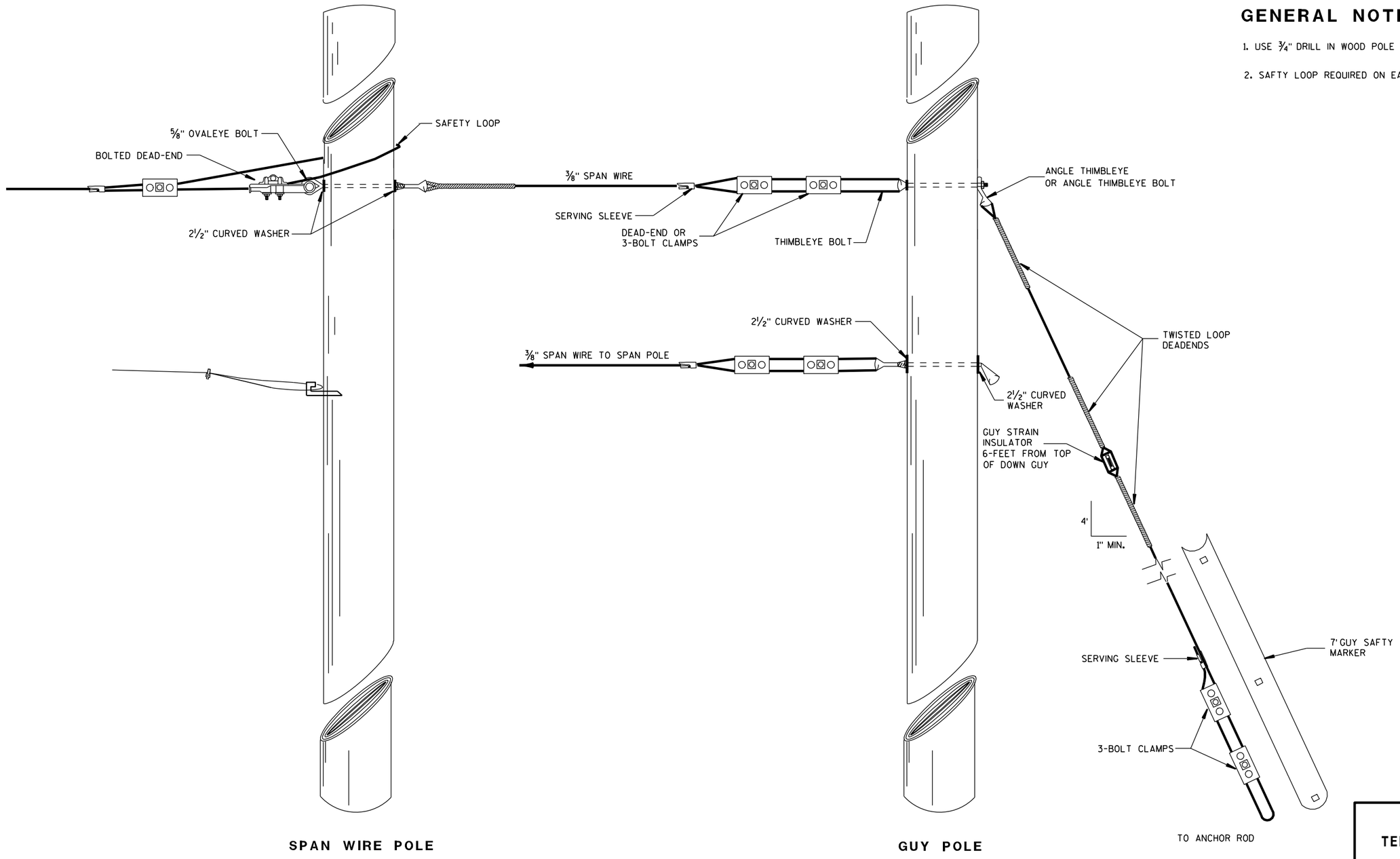

TYPICAL DEAD-ENDINGS OR GUYING

SPAN WIRE
TEMPORARY TRAFFIC SIGNAL

STATE OF WISCONSIN
DEPARTMENT OF TRANSPORTATION

APPROVED
7-14-08 /S/ Balu Ananthanarayanan
DATE STATE ELECTRICAL ENGI HWYS
FHWA

6

S.D.D. 9 G 1-3e

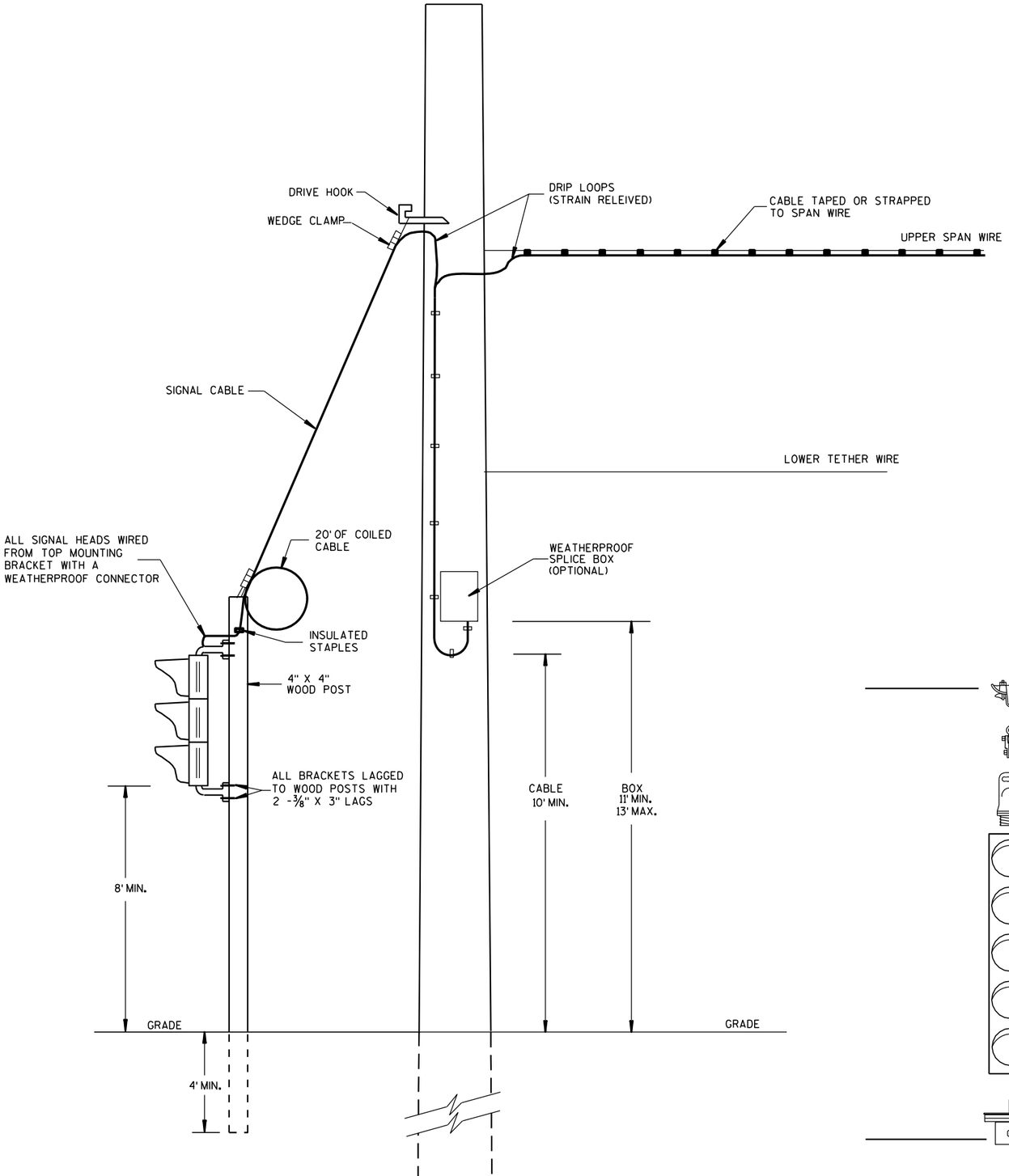

TYPICAL DROP TO TEMPORARY MOVEABLE SIGNAL

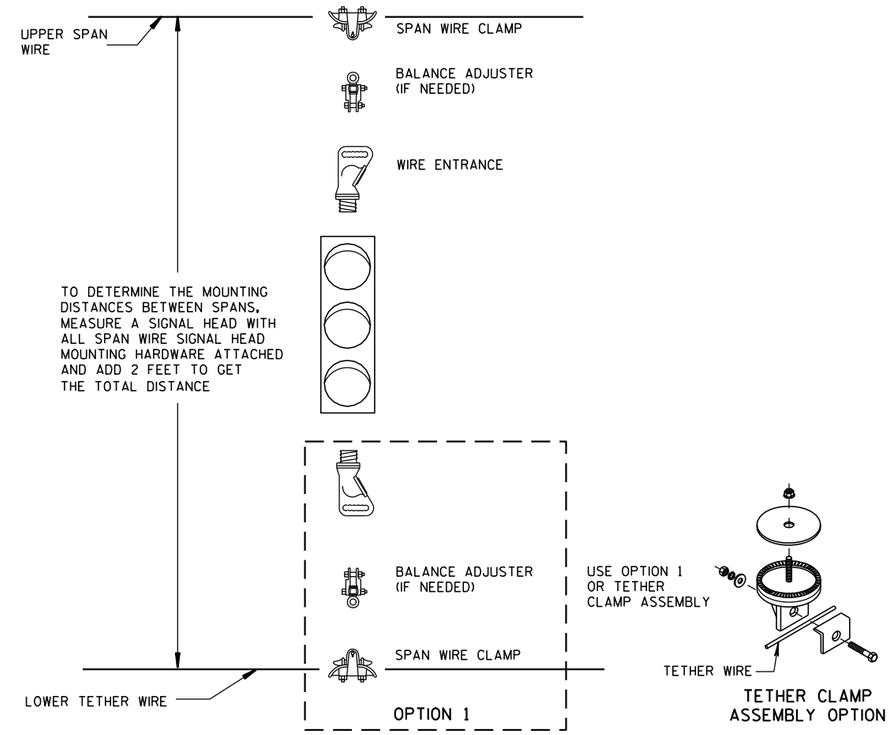

TYPICAL SPAN WIRE MOUNTING HARDWARE

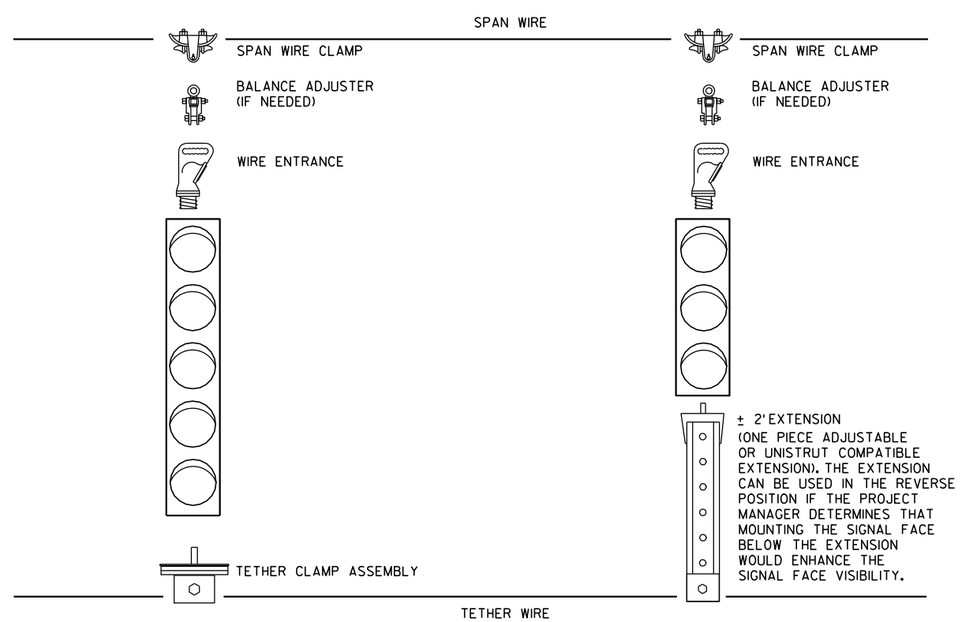

5 SECTION VERTICAL WITH 3 SECTION VERTICAL ON ONE SPAN WIRE

SPAN WIRE
TEMPORARY TRAFFIC SIGNAL

STATE OF WISCONSIN
DEPARTMENT OF TRANSPORTATION

APPROVED
7-14-08 — DATE
/S/ Balu Ananthanarayanan — STATE ELECTRICAL ENGI
HWYS
FHWA

6

S.D.D. 9 G 1-3f

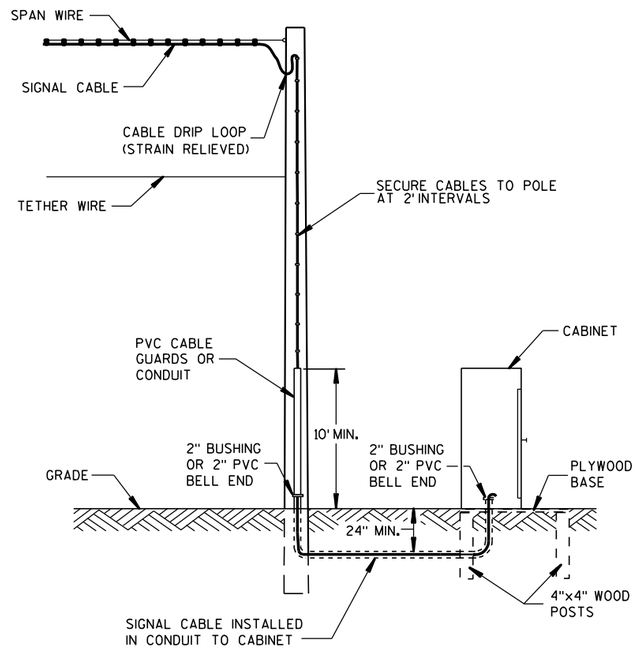

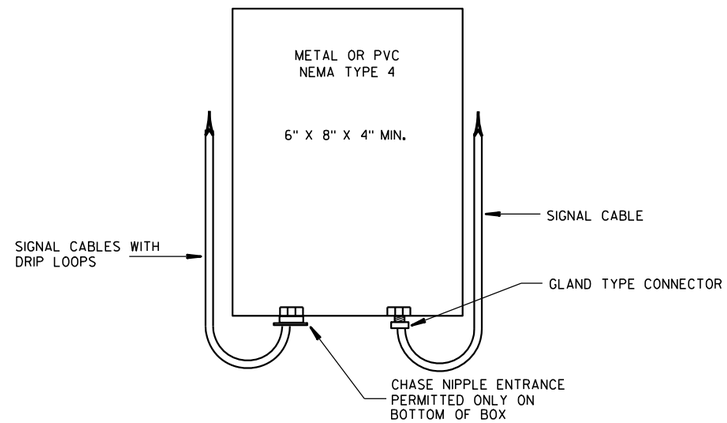

SPLICE BOX

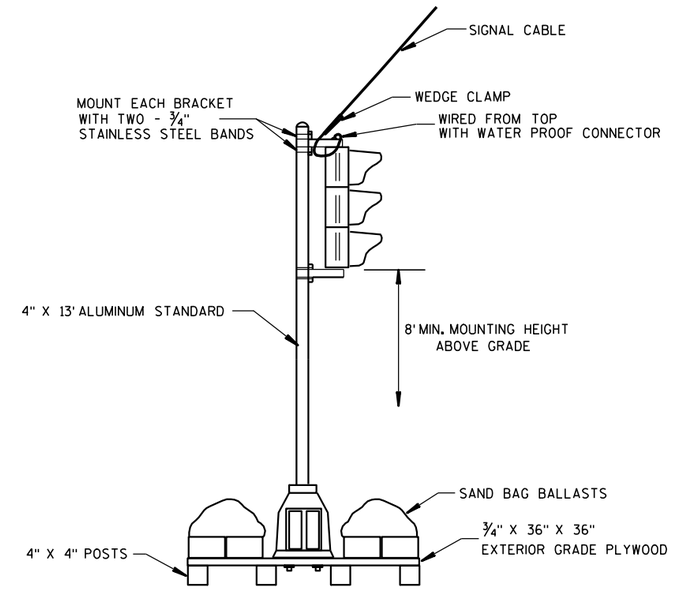

TYPICAL SKID TYPE TEMPORARY

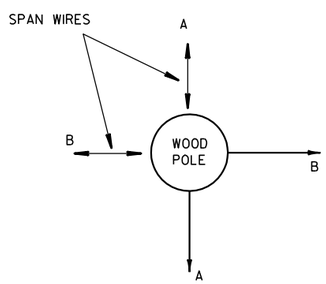

ALL DOWN OR SIDEWALK GUYS SHALL BE INSTALLED IN THE OPPOSITE DIRECTION OF THE STRAIN OF THE SPAN WIRE

CORNER POLES

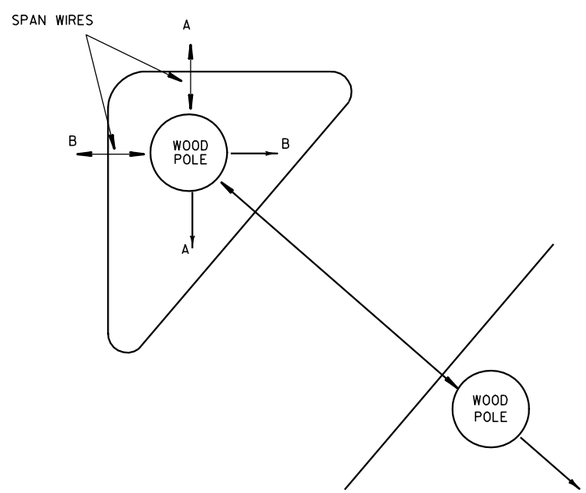

ISLAND POLES

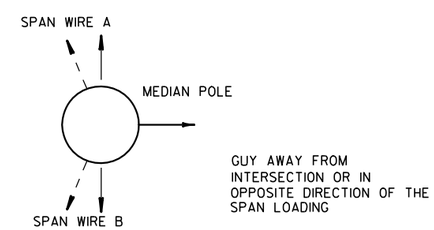

GUY AWAY FROM INTERSECTION OR IN OPPOSITE DIRECTION OF THE SPAN LOADING

MEDIAN POLES

SPAN WIRE
TEMPORARY TRAFFIC SIGNAL

STATE OF WISCONSIN
DEPARTMENT OF TRANSPORTATION

APPROVED

7-14-08 — DATE

/S/ Balu Ananthanarayanan — STATE ELECTRICAL ENGI

HWYS

FHWA

6

S.D.D. 9 G 1-3g

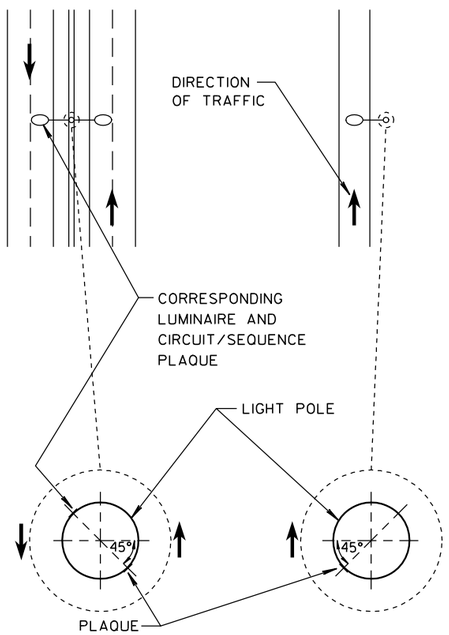

MEDIAN POLE **SINGLE ARM POLE**

LOCATION OF LIGHT POLE CIRCUIT/SEQUENCE PLAQUE

GENERAL NOTES

DETAILS OF CONSTRUCTION AND WORKMANSHIP NOT SHOWN IN THIS DRAWING SHALL CONFORM TO THE PERTINENT REQUIREMENTS OF THE CONTRACT.

PLAQUES SHALL BE INCIDENTAL TO ALL NEW INSTALLATIONS.

WHERE SHOWN IN THE PLANS, REPLACEMENT PLAQUES WILL BE MEASURED AND PAID SEPARATELY.

FASTEN TOP, CENTER AND BOTTOM OF PLAQUE TO POLE OR OTHER LOCATION AS FOLLOWS:

GALVANIZED STEEL SHAFT - STAINLESS STEEL POP RIVETS

A588 STEEL SHAFT - SHIM FOR DRAINAGE WITH STAINLESS WASHERS; FASTEN WITH STAINLESS SELF-TAPPING SCREWS

ALUMINUM SHAFTS - ALUMINUM POP RIVETS

MOUNTING HEIGHT SHALL BE APPROXIMATELY 5.0' ABOVE CURB OR SHOULDER. ADJUST IF IT IS KNOWN THAT REQUIRED TRAFFIC SIGNS WILL OBSTRUCT.

PLAQUE MATERIALS:

BASE - SHEET ALUMINUM, 0.060" THICK.

FACE - WHITE, SELF-ADHESIVE VINYL SHEETING, NON-RETRORFLECTIVE

LINES - BLACK, 1/2" WIDE, SELF-ADHESIVE

CHARACTERS - BLACK, SELF-ADHESIVE, SERIES "D", SIZE AS SHOWN

COLOR PATCHES - VARIOUS COLORS, SELF-ADHESIVE VINYL SHEETING

WITH THE APPROVAL OF THE ENGINEER, THE BASE MATERIAL MAY BE OMITTED AND THE FACE ADHERED DIRECTLY TO THE SURFACE, IN CASES SUCH AS SMOOTH, CLEAN ALUMINUM POLES.

ALTERNATIVE COMPUTER-GENERATED SIGN LETTERING MAY BE ACCEPTED IF THE ENGINEER FINDS IT TO BE EQUIVALENT.

COLOR PATCH CODE FOR HPS LUMINAIRES

1000 WATT - NO PATCH
400 WATT - ORANGE
310 WATT - BLUE
250 WATT - ORANGE WITH WHITE STRIPE
200 WATT - RED
150 WATT - GREEN
100 WATT - BROWN
70 WATT - BROWN WITH WHITE STRIPE

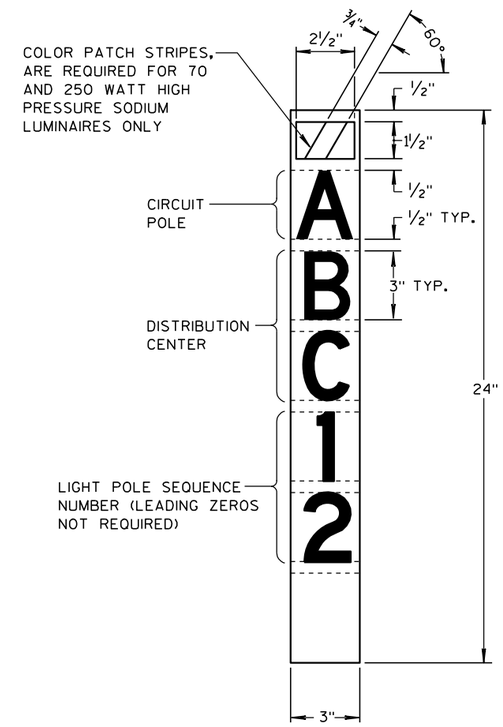

LIGHT POLE CIRCUIT/SEQUENCE PLAQUE

6

6

S.D.D. 10 A 2-2

S.D.D. 10 A 2-2

IDENTIFICATION PLAQUES
LIGHT POLES

STATE OF WISCONSIN
DEPARTMENT OF TRANSPORTATION

APPROVED
10/25/2010 — DATE
/S/ John Corbin — STATE ELECTRICAL ENGI 185 — HWYS
FHWA

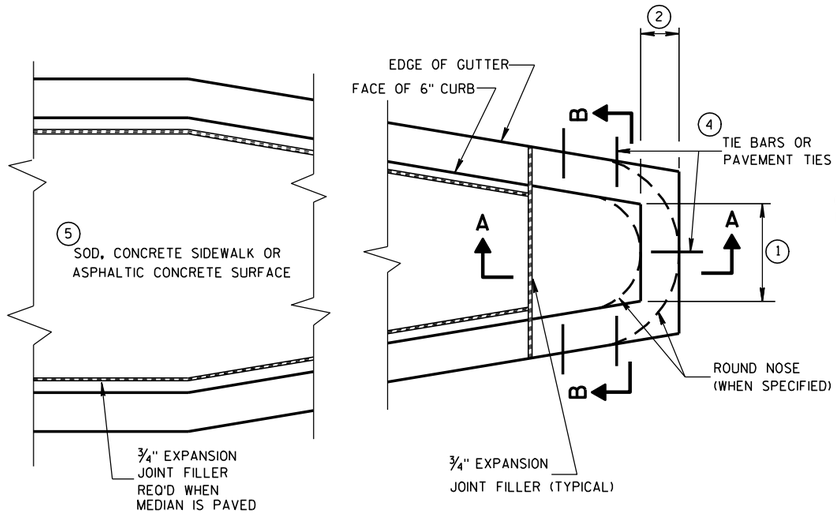

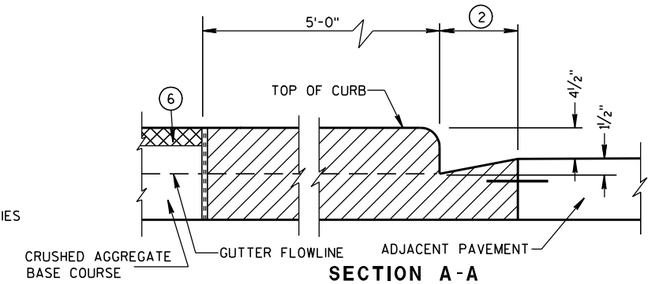

SECTION A-A

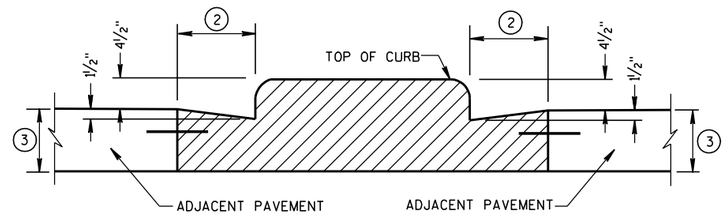

SECTION B-B

CONCRETE MEDIAN BLUNT NOSE DETAIL

GENERAL NOTES

DETAILS OF CONSTRUCTION, MATERIALS AND WORKMANSHIP NOT SHOWN ON THIS DRAWING SHALL CONFORM TO THE PERTINENT REQUIREMENTS OF THE STANDARD SPECIFICATIONS AND THE APPLICABLE SPECIAL PROVISIONS.

1. SEE PLAN FOR MEDIAN NOSE WIDTH AND RADIUS (FOR ROUND NOSE ALTERNATE).
2. WIDTH OF GUTTER TO MATCH EXISTING ADJACENT GUTTER OR AS SPECIFIED ELSEWHERE IN THE PLAN.
3. DEPTH EQUAL TO ADJACENT PAVEMENT. ADJACENT PAVEMENT STRUCTURE DETAILS ARE SHOWN ON THE PLAN. TYPICAL OPTIONS ARE:
   (1) NEW OR EXISTING CONCRETE PAVEMENT.
   (2) ASPHALTIC CONCRETE PAVEMENT OVER NEW OR EXISTING CONCRETE BASE COURSE.
   (3) ASPHALTIC CONCRETE PAVEMENT OVER CRUSHED AGGREGATE BASE COURSE.
4. TIE BARS OR PAVEMENT TIES REQUIRED IN NEW CONCRETE PAVEMENT OR CONCRETE BASE COURSE. TIE BARS SHALL BE NO. 4 X 2'-0" SPACED AT 2'-0" C-C.

   PAVEMENT TIES REQUIRED IN EXISTING CONCRETE BASE COURSE. PAVEMENT TIES SHALL BE NO. 6 X 1'-0" SPACED AT 3'-0" C-C INSTALLED ON A HORIZONTAL SKEW OF 6:1. THE DIRECTION OF SKEW SHALL ALTERNATE AFTER EVERY ONE OR TWO BARS.
5. SURFACE TYPE AND DETAILS ARE SHOWN ELSEWHERE IN THE PLAN.

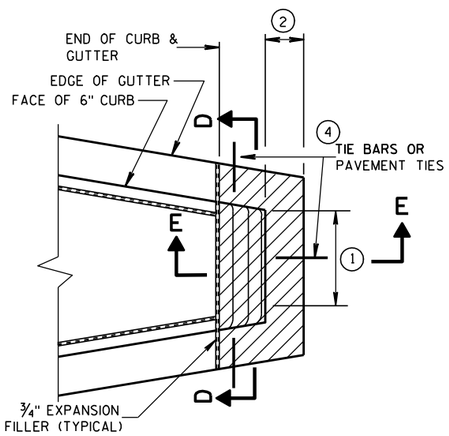

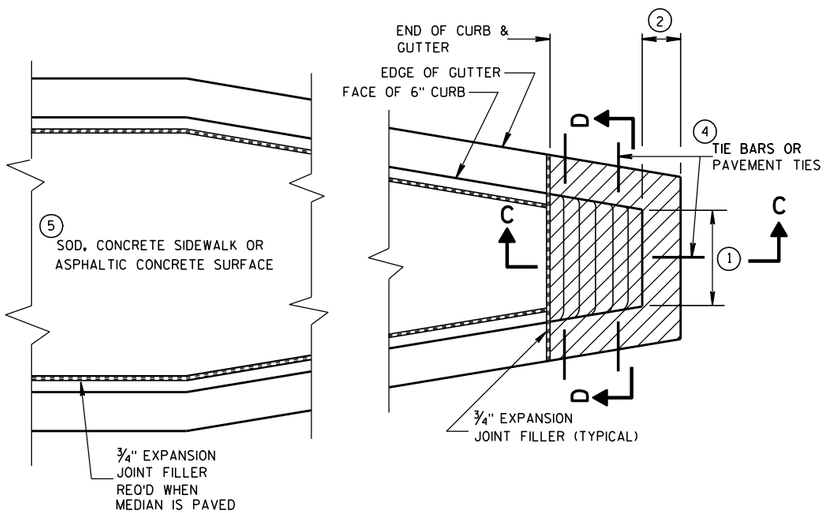

CONCRETE MEDIAN SLOPED NOSE TYPE 1

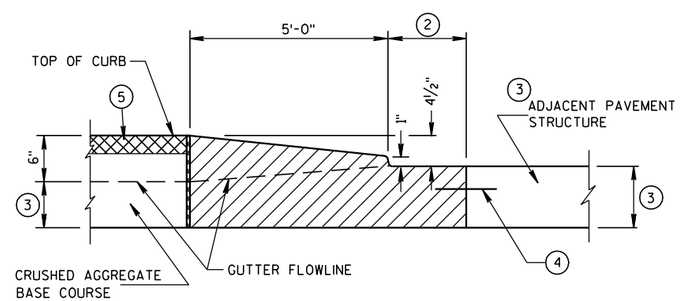

SECTION C-C

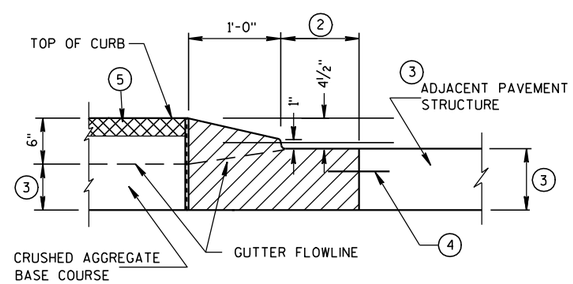

SECTION E-E

CONCRETE MEDIAN SLOPED NOSE TYPE 2

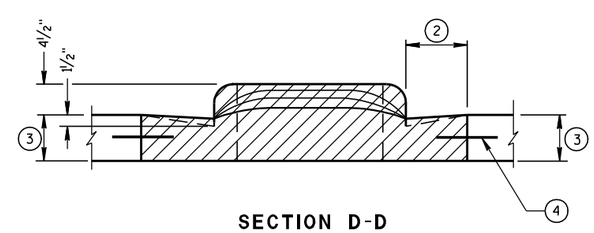

SECTION D-D

CONCRETE MEDIAN NOSE	
STATE OF WISCONSIN DEPARTMENT OF TRANSPORTATION	
APPROVED 6/8/2006 DATE	/S/ Jerry H. ---- ROADWAY STANDARDS ENGINEER
FHWA	NT

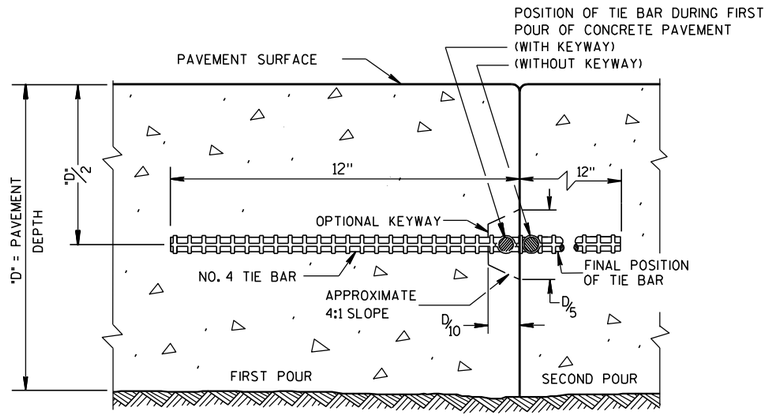

CONSTRUCTION JOINT

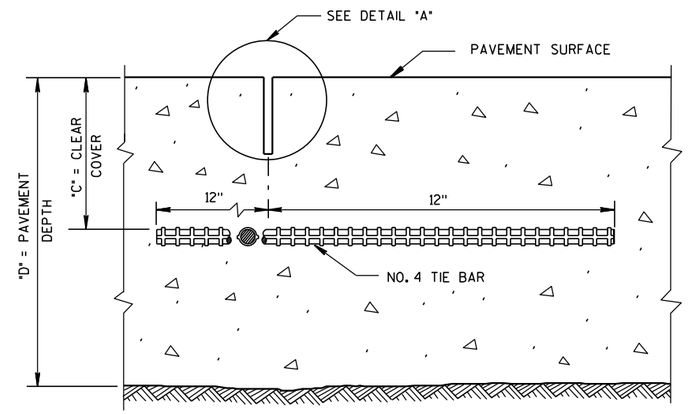

SAWED JOINT

GENERAL NOTES

DO NOT SEAL OR FILL LONGITUDINAL JOINTS.

CREATE A LONGITUDINAL JOINT FOR PAVEMENT WIDTHS GREATER THAN 15 FEET.

CORRELATE LONGITUDINAL JOINTS WITH LANE LINES WHEN POSSIBLE.

(1) ANCHOR TIE BARS INTO DRILLED HOLES WITH AN EPOXY.

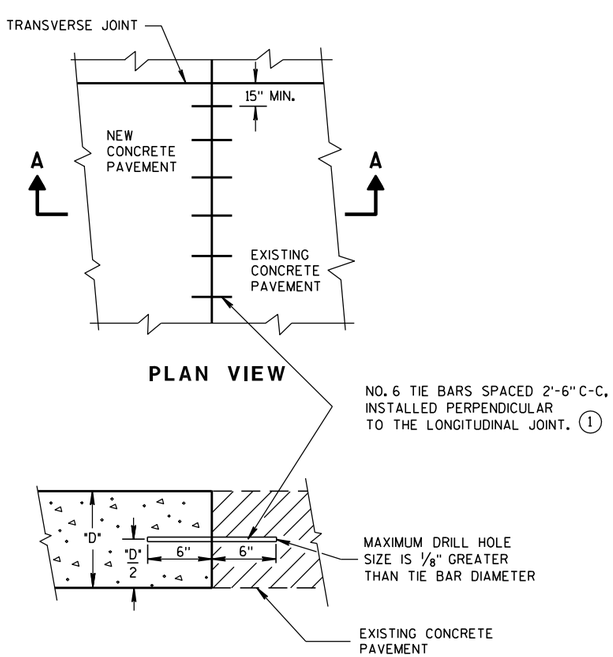

PLAN VIEW

SECTION A-A

LONGITUDINAL CONSTRUCTION JOINT TIE BARS ANCHORED INTO EXISTING PAVEMENT

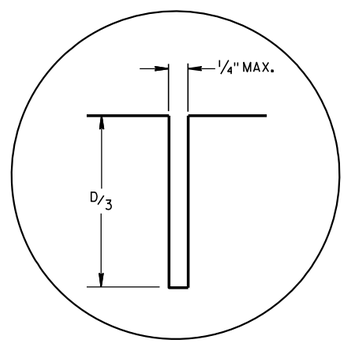

DETAIL "A"

PAVEMENT DEPTH "D"	CLEAR COVER "C"	MAXIMUM TIE BAR SPACING "S"	
		PAVEMENT WIDTH	
		24' OR 26'	≥30'
6, 6 1/2"	3"±1/2"	48"	42"
7, 7 1/2"	3 1/4"±1"	45"	36"
8, 8 1/2"	3 3/4"±1"	39"	30"
9, 9 1/2"	4 1/4"±1"	33"	27"
10, 10 1/2"	4 3/4"±1"	30"	24"
11, 11 1/2"	5 1/4"±1"	27"	21"
12"	5 3/4"±1"	24"	21"

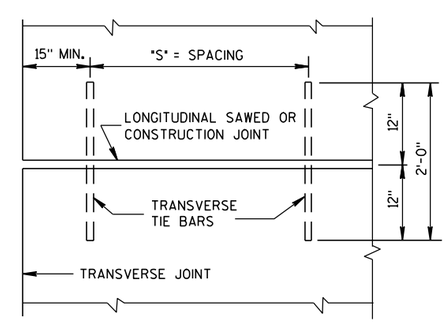

PLAN VIEW

SHOWING LOCATION OF TIE BARS

CONCRETE PAVEMENT
LONGITUDINAL JOINTS AND TIES

STATE OF WISCONSIN
DEPARTMENT OF TRANSPORTATION

APPROVED
10-5-2010 /S/ Deb Bischoff
DATE PAVEMENT POLICY & DI ENGINEER
FHWA

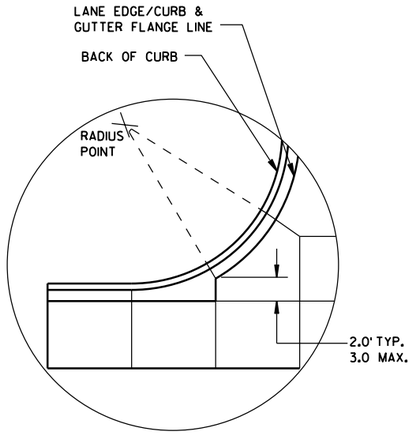

DETAIL "A"

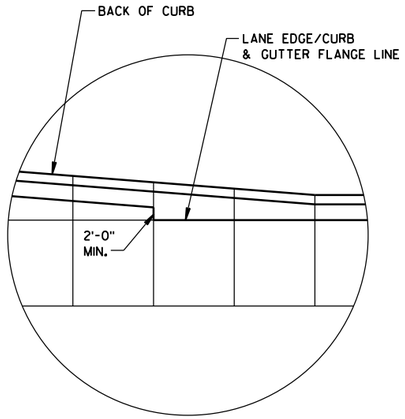

DETAIL "B"

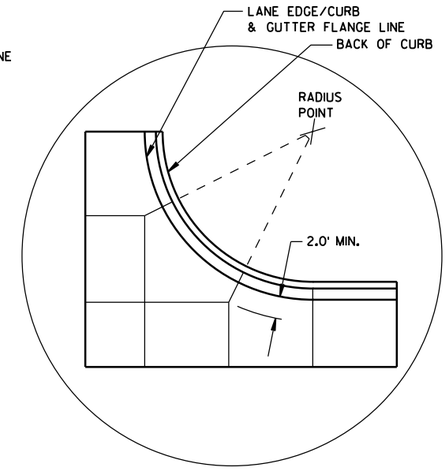

DETAIL "C"

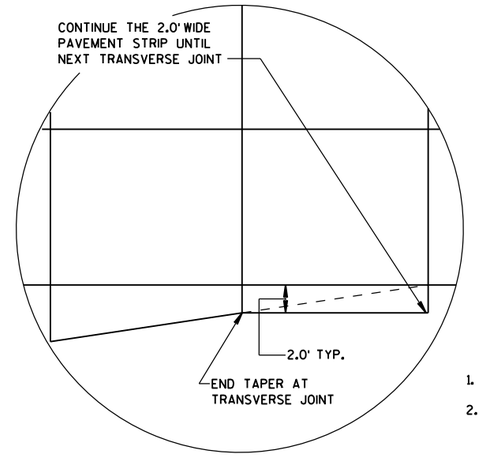

DETAIL "D"

GENERAL NOTES

THE PRIMARY ROADWAY CONTROLS THE TRANSVERSE JOINT PATTERN.

ALIGN NEW JOINTS WITH EXISTING JOINTS OR CRACKS.

CONSTRUCT TRANSVERSE JOINTS PERPENDICULAR TO THE ROADWAY.

ADJUST TRANSVERSE JOINTS TO ALIGN WITH UTILITY FIXTURES (E.G. MANHOLES AND INLETS) IN THE PAVEMENT STRUCTURE WHEN POSSIBLE. WATER VALVES DO NOT REQUIRE JOINT ADJUSTMENT.

AVOID SLABS LESS THAN 2 FEET WIDE OR GREATER THAN 15 FEET WIDE.

SEE TABLE FOR TRANSVERSE JOINT SPACING. JOINT SPACING SPECIFIED IS MAXIMUM AND ACTUAL SPACING CAN BE ADJUSTED TO ACCOMMODATE INTERSECTIONS.

AVOID ANGLES LESS THAN 60° BY DOGLEGGING JOINTS THROUGH CURVE RADIUS POINTS. USE 90° ANGLES WHEN POSSIBLE.

CORRELATE LONGITUDINAL JOINTS WITH LANE LINES WHEN POSSIBLE.

1. PROVIDE TRANSVERSE JOINTS AT ALL PAVEMENT WIDTH CHANGES.
2. CONSTRUCT DOWELED EXPANSION JOINT ON THE SIDE ROAD OF AN INTERSECTION IF THE SIDE ROAD IS CONCRETE PAVEMENT AND GREATER THAN 300 FEET IN LENGTH. ALIGN EXPANSION JOINT WITH EDGE OF RADIUS.
3. THE ENGINEER MAY APPROVE SLIGHT VARIATIONS FROM THESE JOINTING DETAILS.

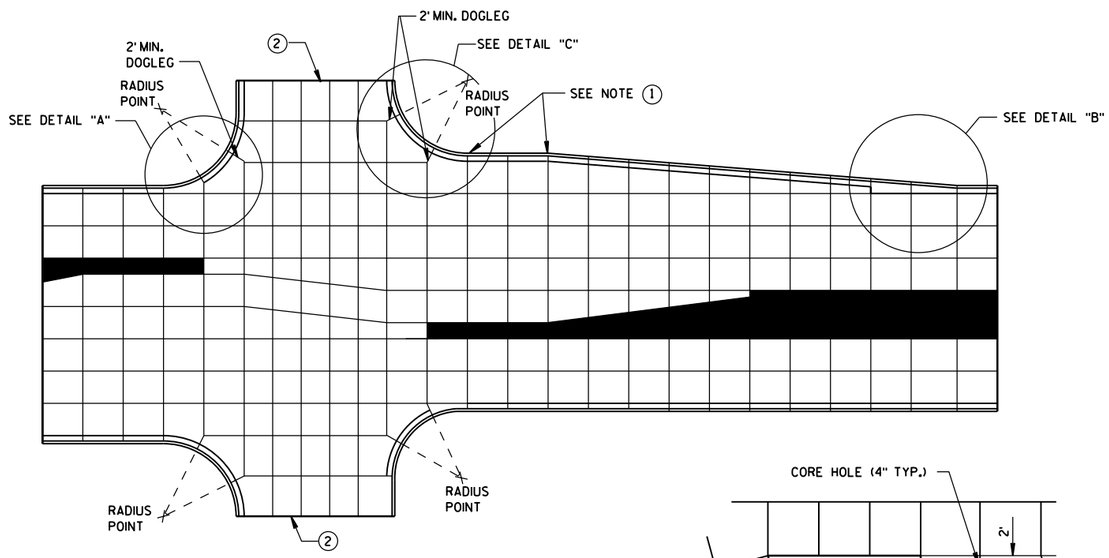

STANDARD INTERSECTION

PAVEMENT DEPTH AND JOINT SPACING TABLE

PAVEMENT DEPTH (D)	CONTRACTION JOINT SPACING
6", 6½"	12'
7", 7½"	14'
8" & ABOVE	15'

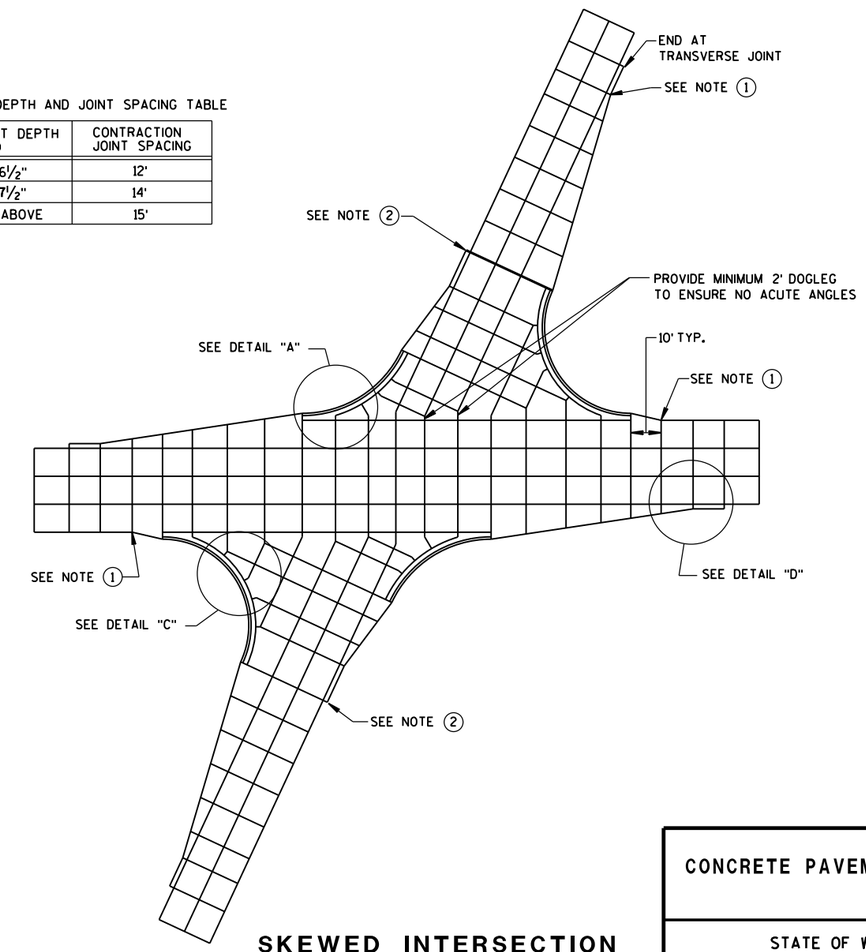

SKEWED INTERSECTION

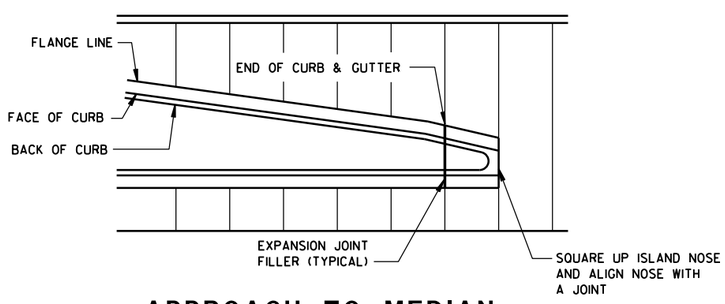

APPROACH TO MEDIAN

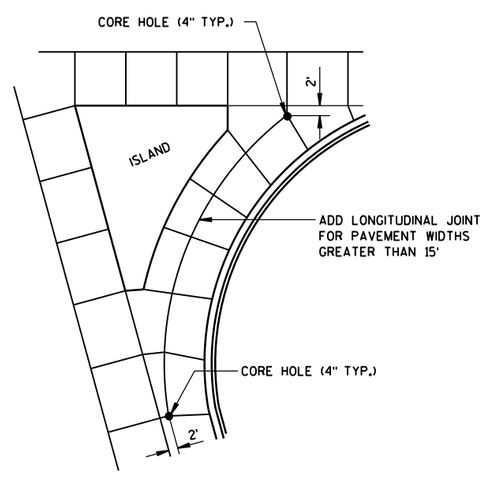

LARGE RIGHT TURN

CONCRETE PAVEMENT JOINTING

STATE OF WISCONSIN
DEPARTMENT OF TRANSPOR

6

S.D.D. 13 C 18-2a

LEGEND

POTENTIAL DOWELED EXPANSION JOINT

DOWELED JOINT

TIED JOINT

GENERAL NOTES

USE AN EXPANSION JOINT FILLER MEETING THE REQUIREMENTS OF STANDARD SPECIFICATION 415.

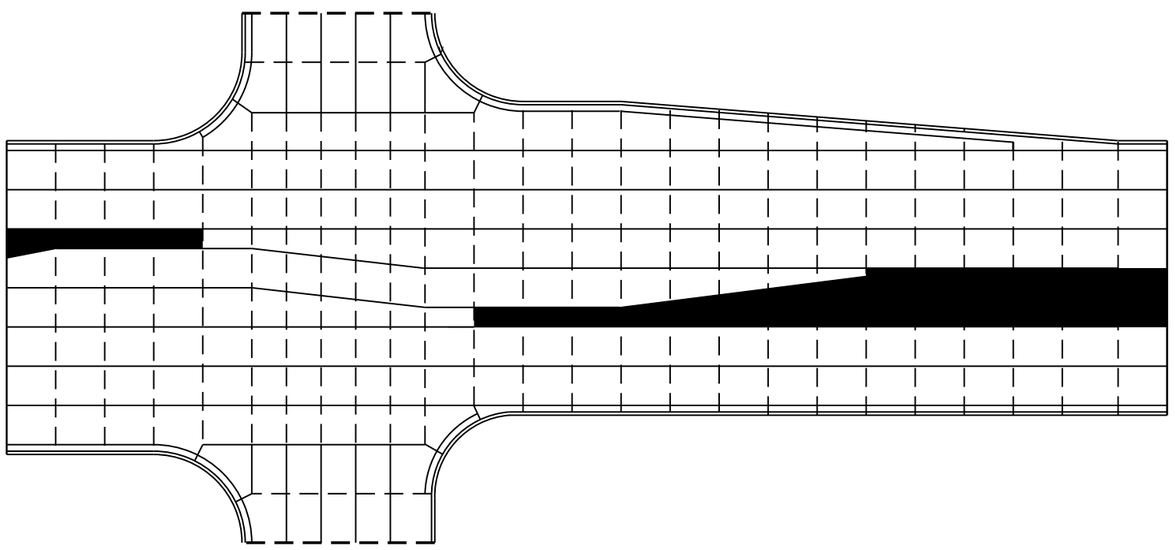

STANDARD INTERSECTION

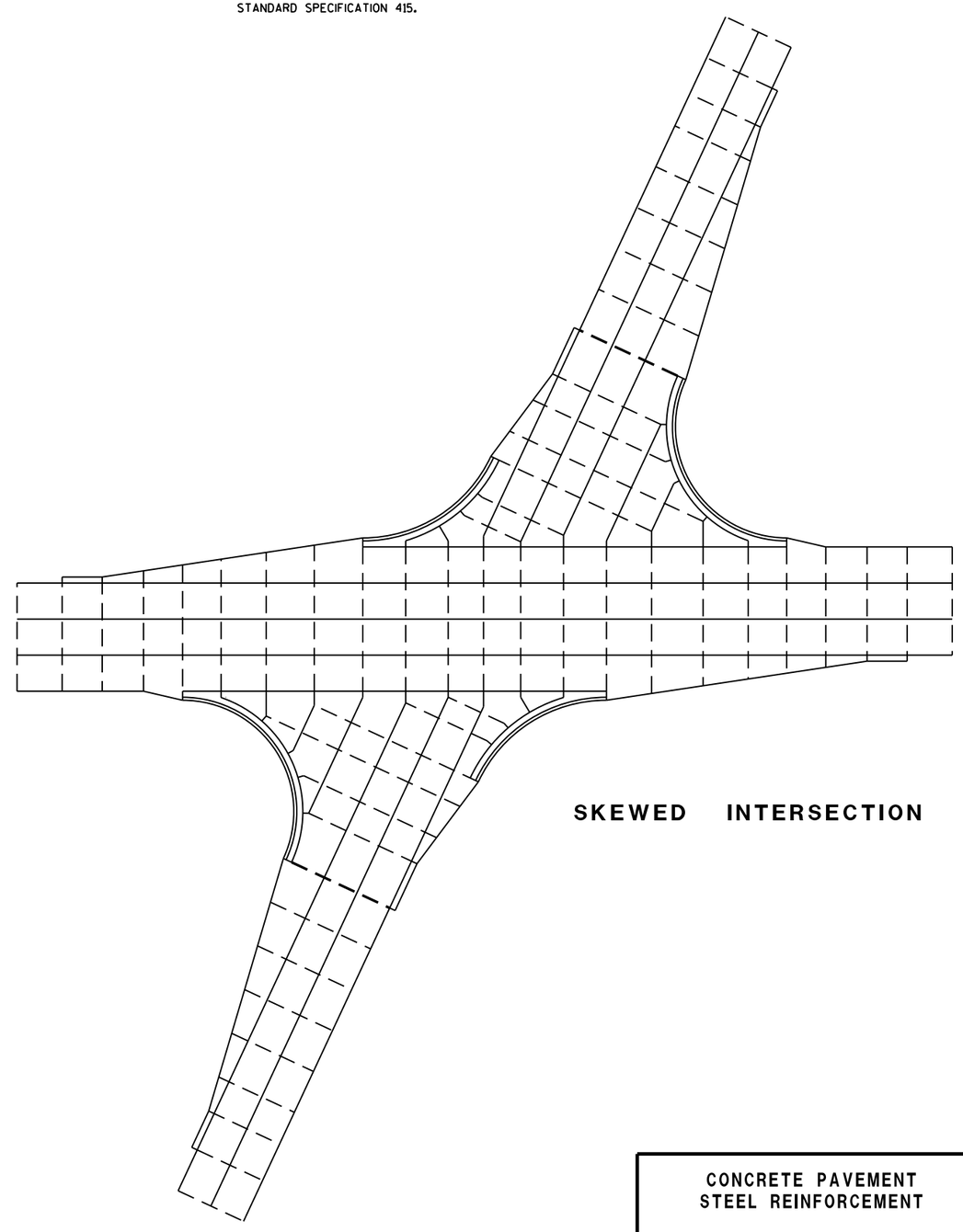

SKEWED INTERSECTION

CONCRETE PAVEMENT
STEEL REINFORCEMENT

STATE OF WISCONSIN
DEPARTMENT OF TRANSPORTATION

6

S.D.D. 13 C 18-2b

6

S.D.D. 13 C 18-2b

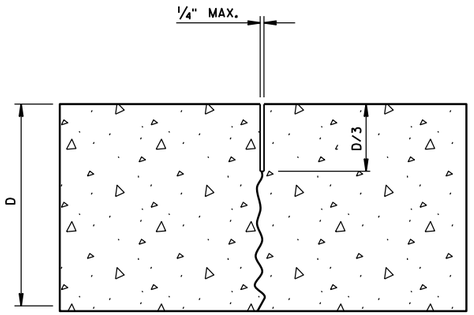

UNDOWELED-TRANSVERSE

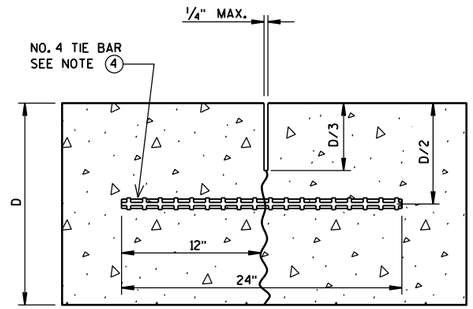

TIED LONGITUDINAL

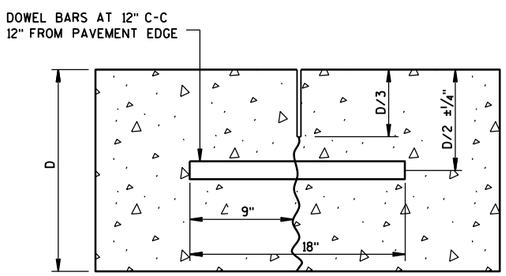

DOWELED-TRANSVERSE

CONTRACTION JOINTS

SEE NOTE 2

GENERAL NOTES

1. USE DOWELED EXPANSION JOINTS ON SIDE ROADS AT INTERSECTIONS (TO ISOLATE THE SIDE ROAD FROM THE THROUGH STREET) IF THE SIDE ROAD IS CONCRETE PAVEMENT AND GREATER THAN 300 FEET IN LENGTH.
2. SPACE CONTRACTION JOINTS IN ACCORDANCE WITH 13C4, 13C11 OR 13C13.
3. LOCATE CONSTRUCTION JOINTS A MINIMUM OF 6 FEET FROM THE NEAREST CONTRACTION JOINT AND ALIGN PARALLEL TO CONTRACTION JOINTS.
4. SPACE TIE BARS AT LONGITUDINAL CONSTRUCTION OR CONTRACTION JOINTS IN ACCORDANCE WITH SDD 13C1.
5. CONSTRUCTION JOINTS CAN BE FORMED OR SAWED.
6. IF JOINT IS FORMED, PROVIDE A 1/4-INCH RADIUS.

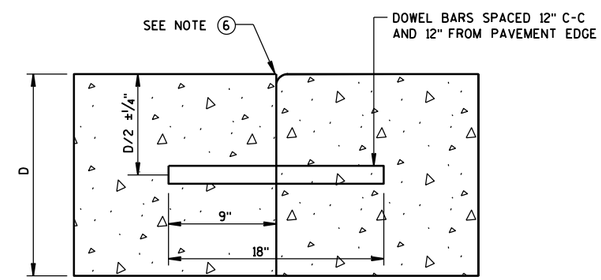

DOWELED TRANSVERSE

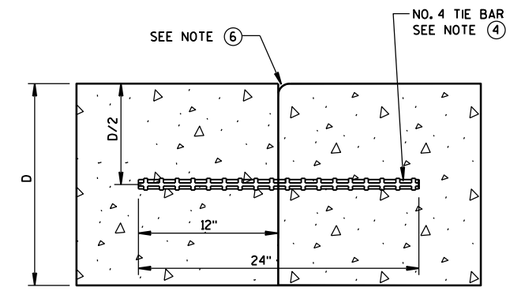

TIED LONGITUDINAL

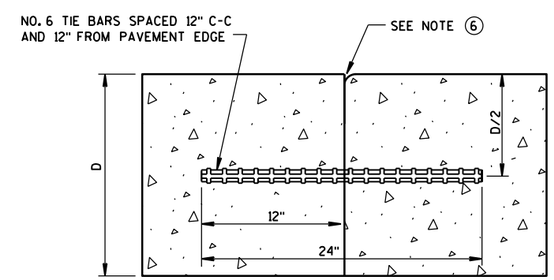

TIED TRANSVERSE

(FOR USE ON NON-DOWELED PAVEMENTS ONLY)

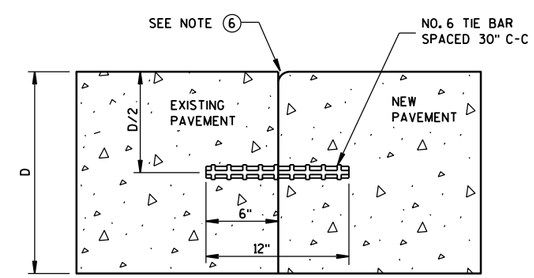

TIED LONGITUDINAL TO EXISTING

CONSTRUCTION JOINTS

SEE NOTE 5

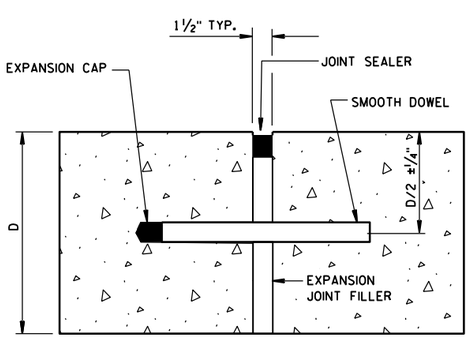

DOWELED-TRANSVERSE

SEE NOTE 1

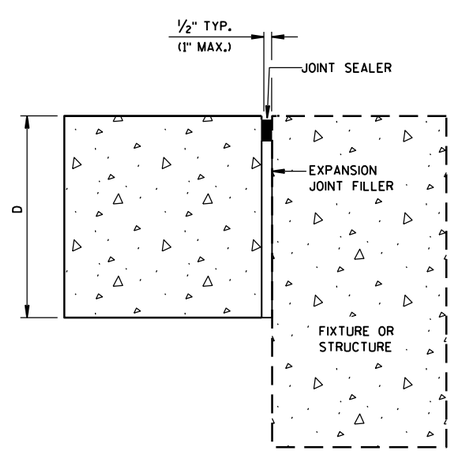

UNTIED-LONGITUDINAL

EXPANSION JOINTS

CONCRETE PAVEMENT
JOINT TYPES

STATE OF WISCONSIN
DEPARTMENT OF TRANSPOR

6

S.D.D. 13 C 18-2c

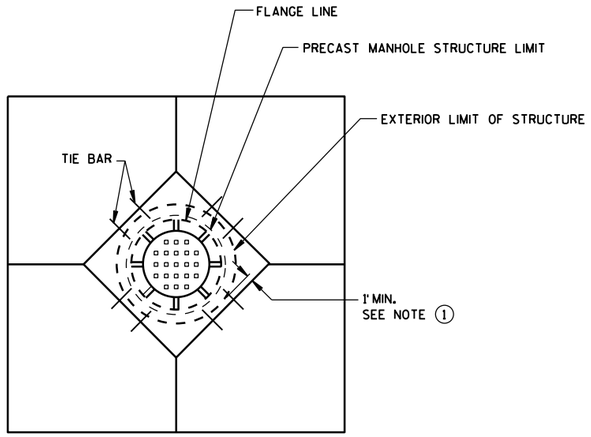

DIAGONAL MANHOLE BOXOUT FOR CONSTRUCTION JOINTS

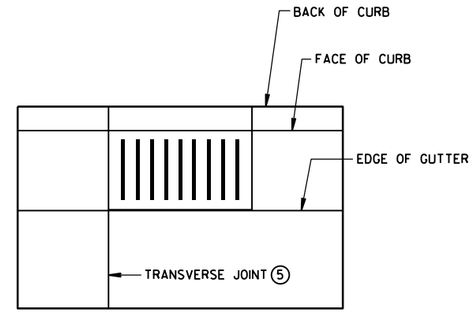

INLET WITH TRANSVERSE JOINT

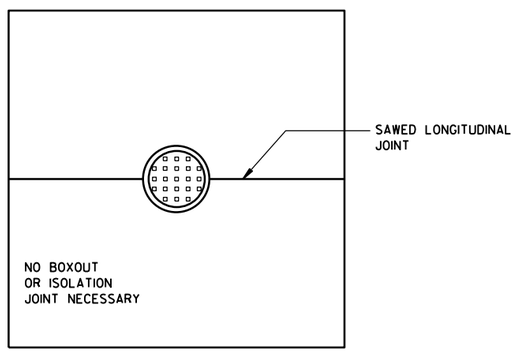

MANHOLE WITH LONGITUDINAL JOINT

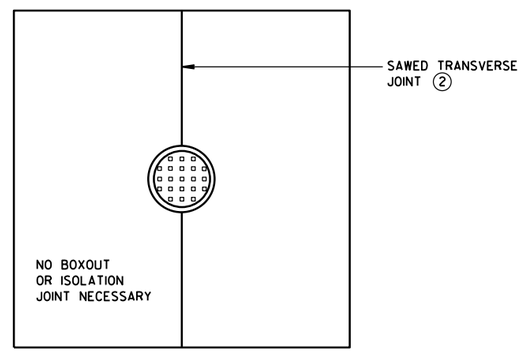

MANHOLE WITH TRANSVERSE JOINT

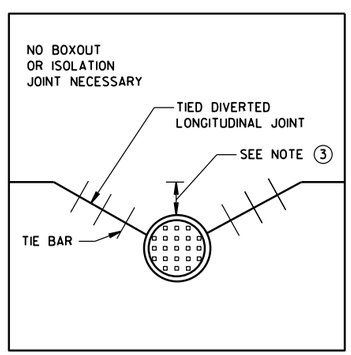

MANHOLE WITH DIVERTED LONGITUDINAL CONTRACTION JOINT

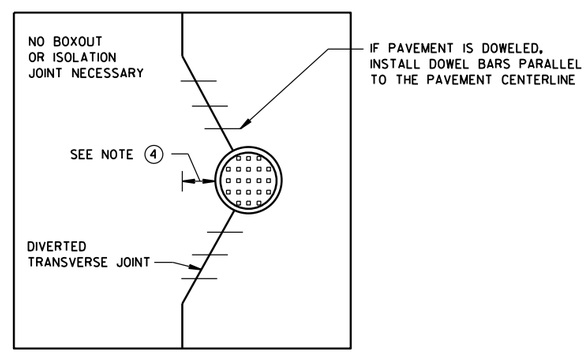

MANHOLE WITH DIVERTED TRANSVERSE CONTRACTION JOINT

GENERAL NOTES

1. USE BOXOUTS WHEN UTILITY STRUCTURE IS IN THE PATH OF CONSTRUCTION JOINTS. PROVIDE A 1-FOOT MINIMUM CLEARANCE BETWEEN THE EXTERIOR LIMIT OF THE STRUCTURE TO THE DIAMOND BOXOUT.
2. ADJUST TRANSVERSE JOINT TO INTERSECT MANHOLE IF POSSIBLE.
3. IF DISTANCE BETWEEN THE LONGITUDINAL JOINT AND THE EDGE OF MANHOLE IS 2 FEET OR LESS, DIVERT THE LONGITUDIAL JOINT AT A 2:1 TAPER RATE TO THE CENTER OF THE MANHOLE. IF THE DISTANCE IS GREATER THAN 2 FEET, DO NOT DIVERT THE JOINT AND SAW AS NORMAL. PLACE REBAR REINFORCEMENT AROUND THE MANHOLE.
4. IF DISTANCE FROM THE EDGE OF THE MANHOLE TO THE NEAREST TRANSVERSE JOINT IS 4 FEET OR LESS, REDIRECT JOINT TO INTERSECT THE CENTER OF THE MANHOLE. IF DISTANCE IS GREATER THAN 4 FEET, DO NOT DIVERT THE JOINT AND SAW AS NORMAL. PLACE REBAR REINFORCEMENT AROUND THE MANHOLE.
5. ALIGN TRANSVERSE JOINT WITH ONE EDGE OF INLET WHEN PRACTICAL.

CONCRETE PAVEMENT JOINTING AT UTILITY FIXTURES

STATE OF WISCONSIN
DEPARTMENT OF TRANSPORTATION

APPROVED
5-3-2013 DATE
/S/ Deb Bischoff PAVEMENT POLICY & DE NEER
FHWA

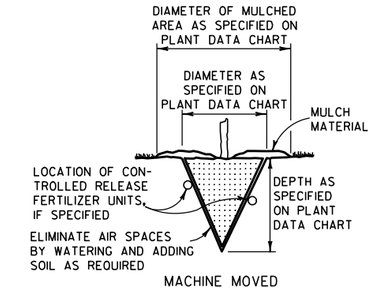

MACHINE MOVED

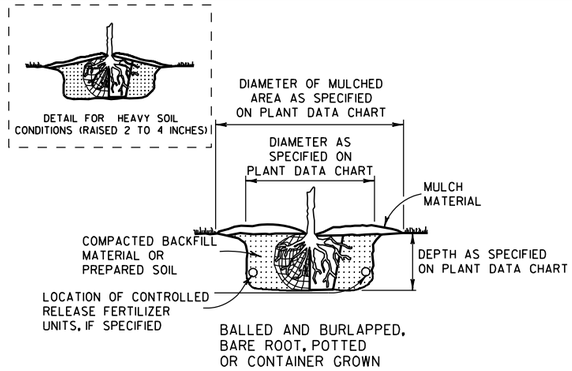

BALLED AND BURLAPPED, BARE ROOT, POTTED OR CONTAINER GROWN

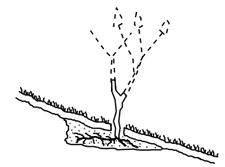

ACCOMMODATE ROOTS (SMOOTH AND STAGHORN SUMAC)

NOTE:
1) ENGINEER SHALL REQUIRE 3 SLITS IN POT TO SPEED DETERIORATION
2) METAL, PLASTIC OR OTHER NONDEGRADABLE POTS SHALL BE REMOVED PRIOR TO PLANTING

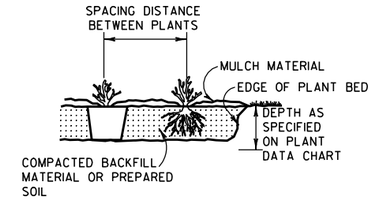

PREPARED BED (BARE ROOT AND POTTED)

PLANTING

TOP VIEW

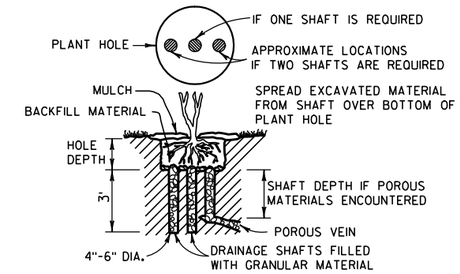

NOTE:
DRAINAGE SHAFT AS SPECIFIED ON PLANT DATA CHART

DRAINING

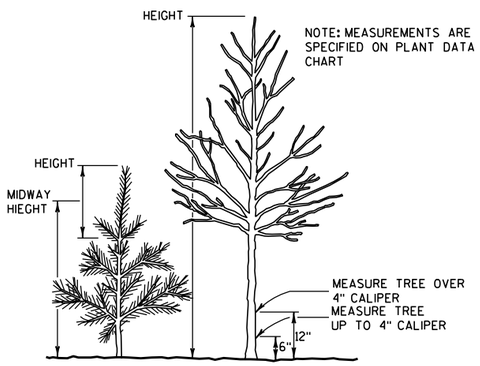

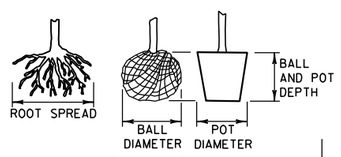

MEASURING

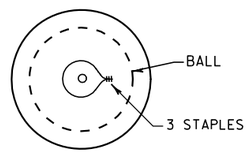

TOP VIEW

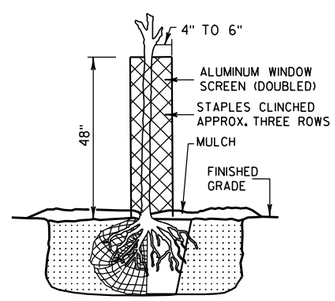

RODENT PROTECTION

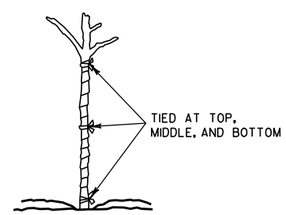

WRAPPING

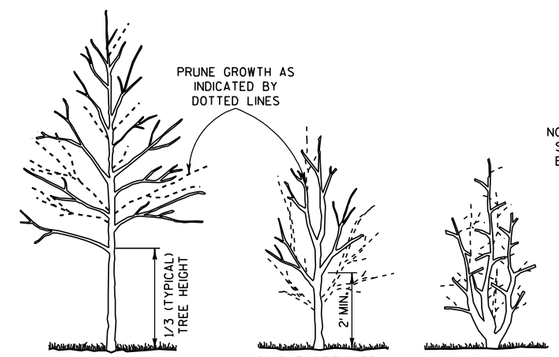

TALL DECIDUOUS TREES (ASH, MAPLE, LINDEN, OAK)

SINGLE STEMMED LOW DECIDUOUS TREES (CRABS AND OTHER SINGLE STEM TYPE)

MULTI-STEMMED LOW DECIDUOUS TREES OR LARGE SHRUBS (HAWTHORN, SERVICEBERRY)

NOTE: WHEN PRUNING, PRESERVE CHARACTER AND SHAPE OF TREE. AVOID LEAVING STUBS - REMOVE BRANCH OR TWIG BACK TO THE NEAREST CROTCH
1) PRUNE TO REMOVE DEAD AND BROKEN BRANCHES
2) PRUNE TO REMOVE BRANCHES THAT TOUCH OR ARE TOO CLOSE TO OTHER BRANCHES

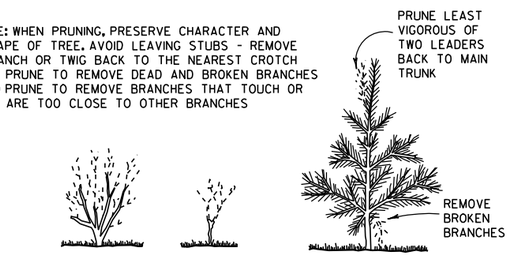

SHRUBS (GRAY DOGWOOD ARROWWOOD VIBURNUM)

SUMAC

TREE TYPE EVERGREENS (PINE, SPRUCE, FIR) EVERGREENS USUALLY ARE NOT PRUNED

PRUNING

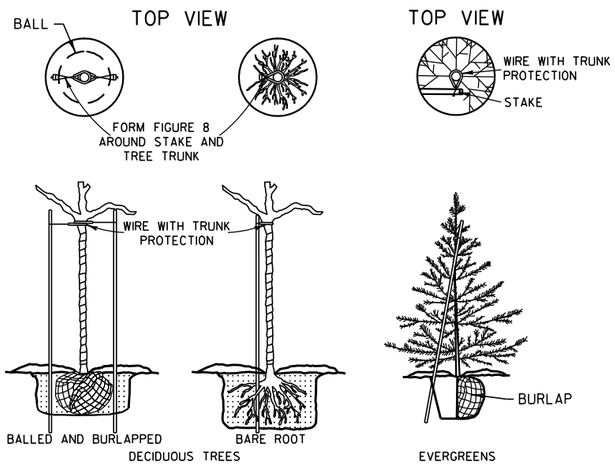

NOTE: BRACING STAKE
1) SHALL BE DRIVEN INTO THE GROUND AS CLOSE TO THE TREE AS POSSIBLE WITHOUT DAMAGING THE BRANCHES.
2) MAY BE DRIVEN AT SUCH AN ANGLE THAT IT DOES NOT PENETRATE THE BALL OR POT.
3) SHALL NOT PROTRUDE ABOVE THE TOP OF THE TREE; AND
4) SHALL HAVE A HOLE NEAR THE TOP TO HOLD THE WIRE IN PLACE.

BRACING

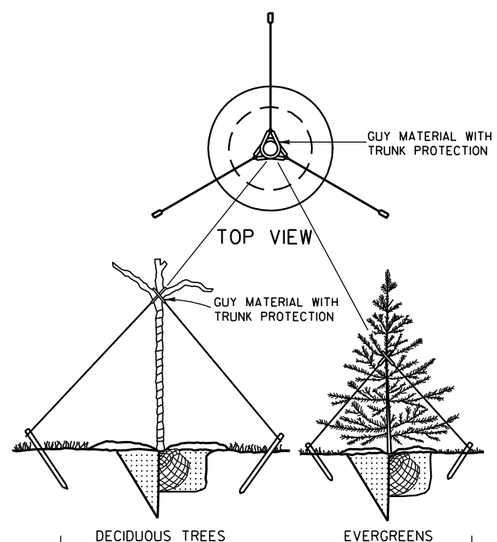

GUYING

PRUNE LARGER SHRUBS BY REMOVING FROM ONE-THIRD TO ONE-HALF TOP GROWTH AS INDICATED BY DOTTED LINE

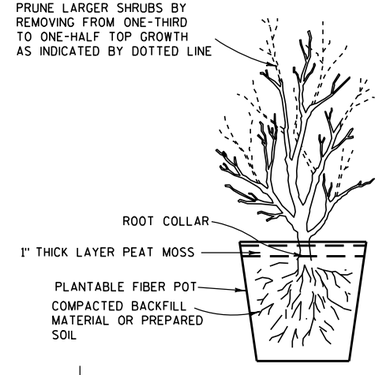

POTTING

NOTES

DETAILS OF CONSTRUCTION NOT SHOWN ON THIS DRAWING SHALL CONFORM TO THE PERTINENT REQUIREMENTS OF THE STANDARD SPECIFICATIONS AND THE APPLICABLE SPECIAL PROVISIONS.

BRACING, WRAPPING, GUYING, RODENT PROTECTION, FERTILIZER AND MULCH SHALL BE USED ONLY WHEN SPECIFIED ON THE PLANT DATA CHART (PART OF PLAN) OR SPECIAL PROVISIONS.

TREE PLANTING DETAIL

STATE OF WISCONSIN
DEPARTMENT OF TRANSPORTATION

APPROVED
4/11/94 — DATE
/S/ Rory L. Rhinesmith — CHIEF METHODS DEVELOPMENT ENGINEER
FHWA

6

S.D.D. 14 A 2-1

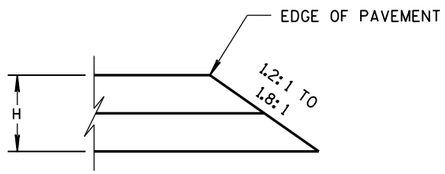

CONSTRUCTED WITH FINAL TWO LAYERS

FOR H 5" OR LESS

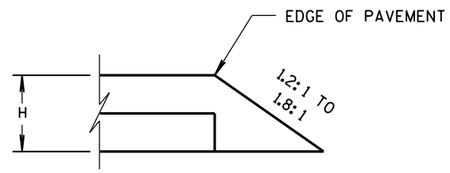

CONSTRUCTED WITH FINAL LAYER

FOR H 5" OR LESS

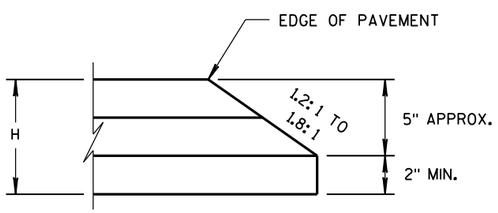

CONSTRUCTED WITH FINAL TWO LAYERS

FOR H GREATER THAN 5"

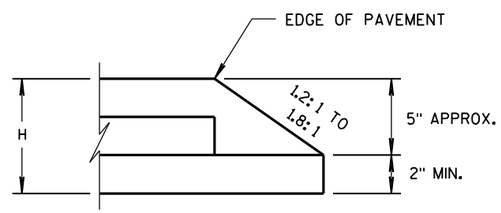

CONSTRUCTED WITH FINAL LAYER

FOR H GREATER THAN 5"

HMA PAVEMENT AND HMA OVERLAYS

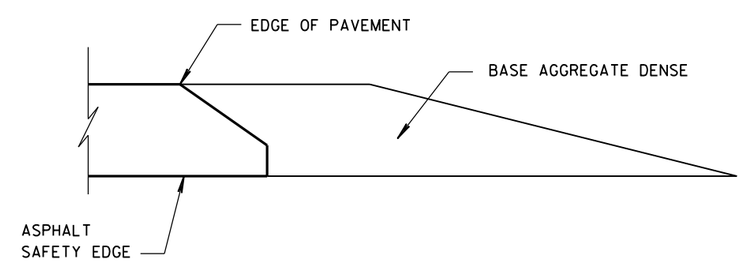

FINISHED SHOULDER AGGREGATE PLACEMENT

6

6

S.D.D. 14 B 29-1

S.D.D. 14 B 29-1

SAFETY EDGE SM

STATE OF WISCONSIN
DEPARTMENT OF TRANSPORTATION

APPROVED

11/30/2012
DATE

/S/ Jerry H. Zogg
ROADWAY STANDARDS DEVELOPMENT ENGINEER

FHWA

GENERAL NOTES

DETAILS OF CONSTRUCTION, MATERIALS AND WORKMANSHIP NOT SHOWN ON THIS DRAWING SHALL CONFORM TO THE PERTINENT REQUIREMENTS OF THE STANDARD SPECIFICATIONS AND THE APPLICABLE SPECIAL PROVISIONS.

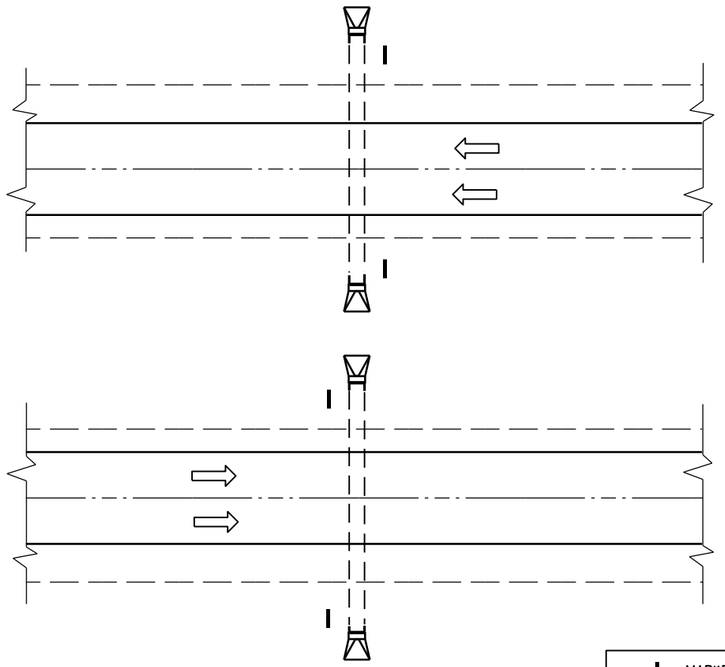

PLAN VIEW

DIVIDED HIGHWAY

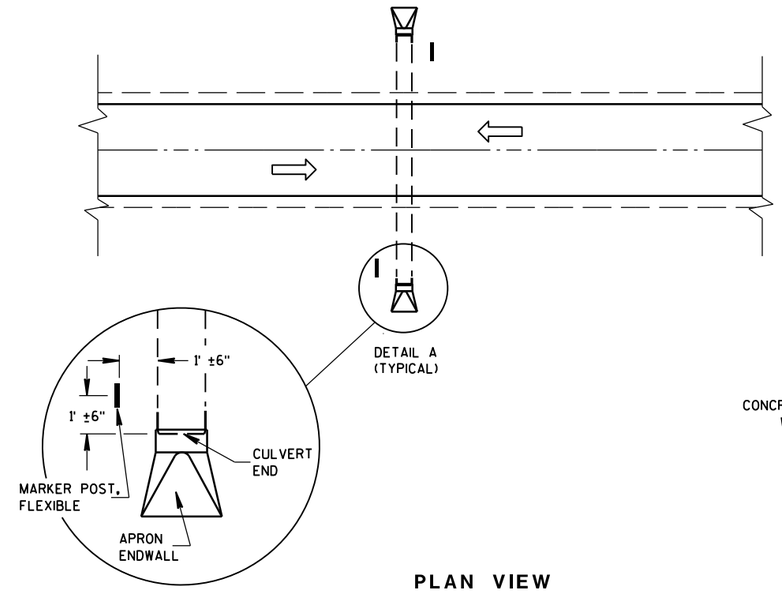

DETAIL A
(TYPICAL)

PLAN VIEW

UNDIVIDED HIGHWAY

MARKER POST, FLEXIBLE

DIRECTION OF TRAFFIC FLOW

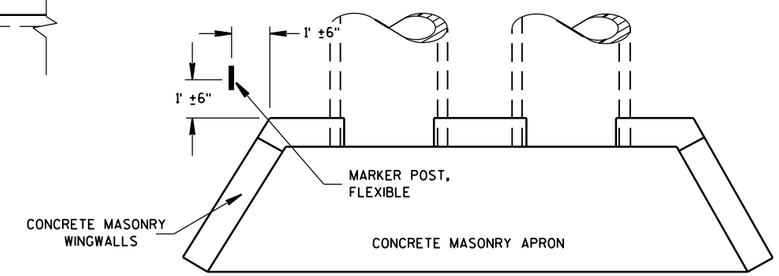

PLAN VIEW

CONCRETE MASONRY ENDWALLS FOR CULVERT PIPE AND PIPE ARCH

FLEXIBLE MARKER POST LOCATION

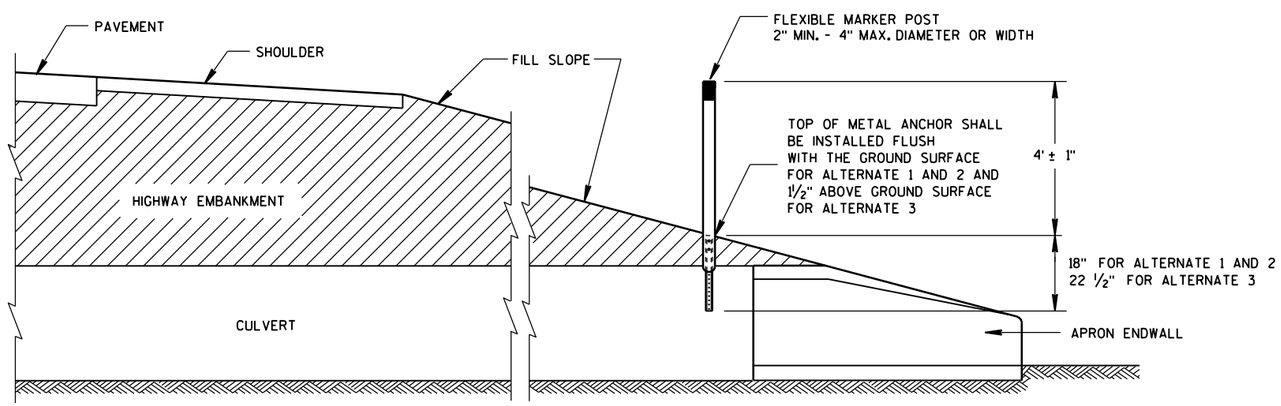

CROSS SECTION

FLEXIBLE MARKER POST

FLEXIBLE MARKER POST FOR CULVERT END

STATE OF WISCONSIN
DEPARTMENT OF TRANSPOR

6

S.D.D. 15 A 3-2a

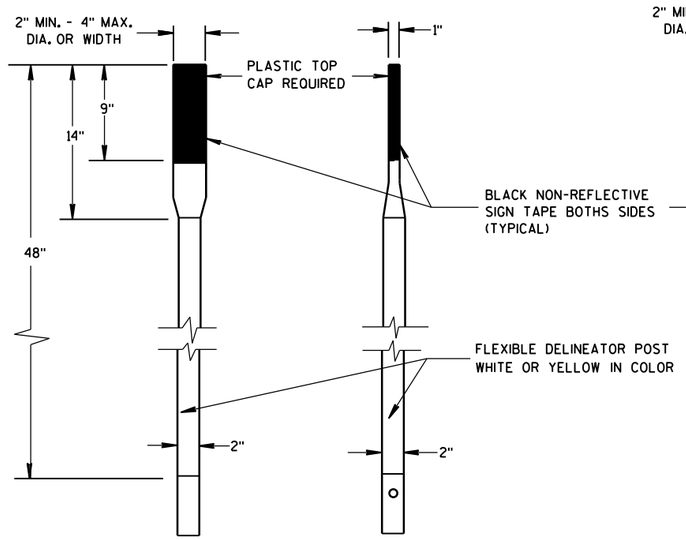

FRONT VIEW SIDE VIEW

ALTERNATE 1

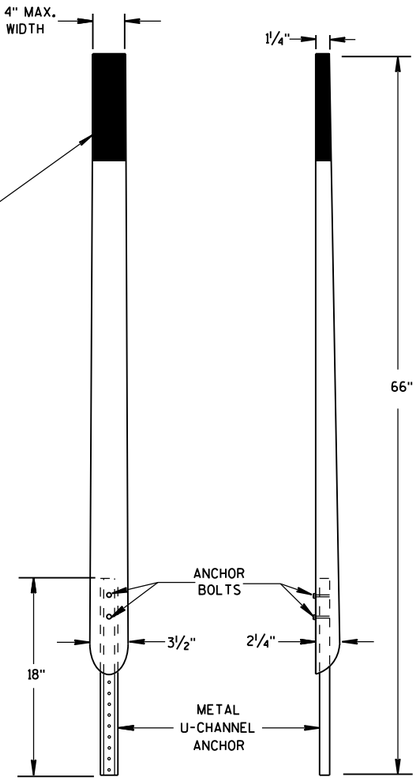

FRONT VIEW SIDE VIEW

ALTERNATE 2

FLEXIBLE MARKER POSTS

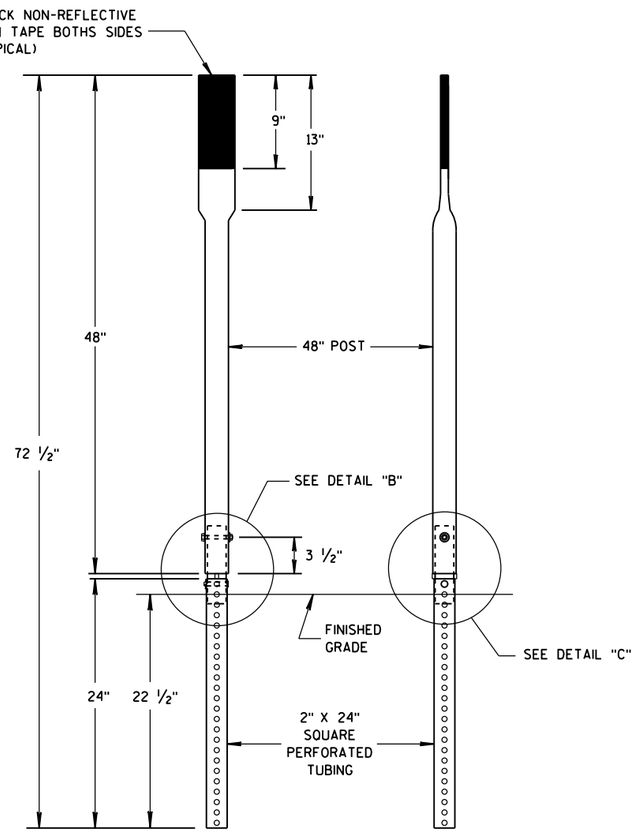

FRONT VIEW SIDE VIEW

ALTERNATE 3

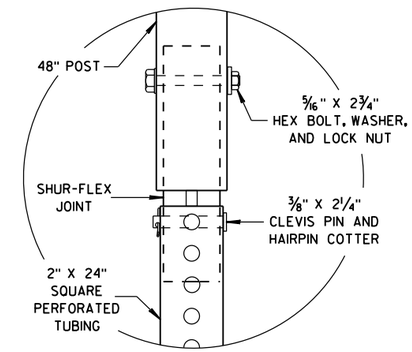

DETAIL B

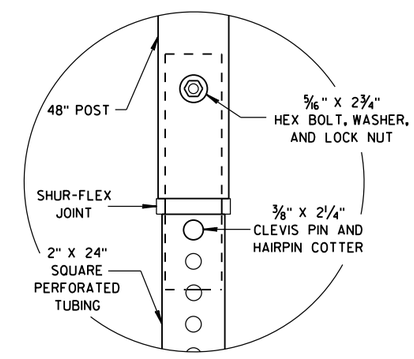

DETAIL C

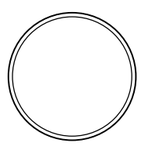

SECTION A-A

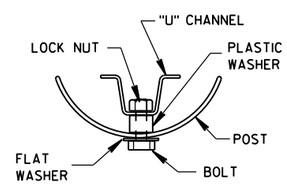

SECTION B-B

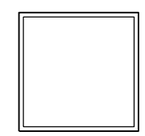

SECTION C-C

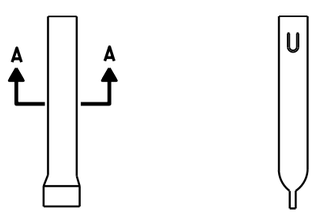

FRONT VIEW SIDE VIEW

ALTERNATE 1

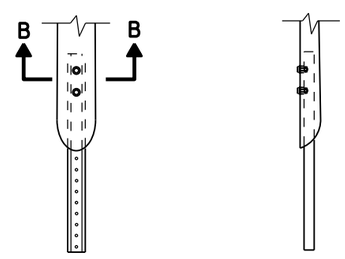

FRONT VIEW SIDE VIEW

ALTERNATE 2

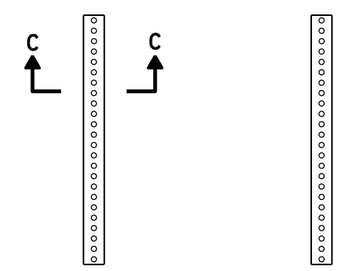

FRONT VIEW SIDE VIEW

ALTERNATE 3

FLEXIBLE MARKER POST ANCHORS

FLEXIBLE MARKER POST
FOR CULVERT END

STATE OF WISCONSIN
DEPARTMENT OF TRANSPORTATION

APPROVED
10/1/2012 /S/ Travis Feltes
DATE STATE TRAFFIC ENGINEER
FHWA

6

6

S.D.D. 15 A 3-2b

S.D.D. 15 A 3-2b

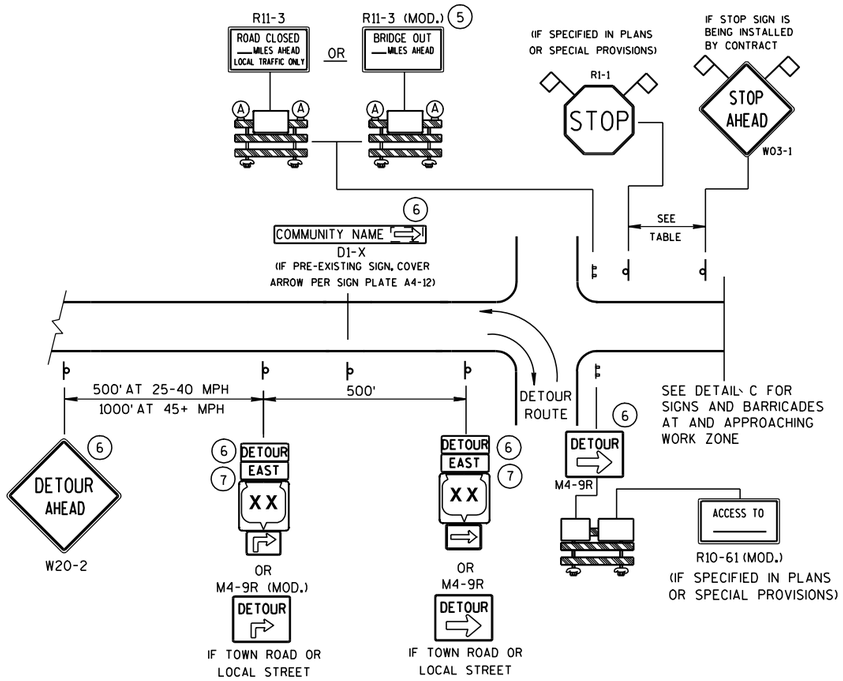

DETAIL A

MAINLINE CLOSURE WITH POSTED DETOUR

WORK ZONE GREATER THAN 1/2 MILE FROM DETOUR ROUTE (1000 FEET IF URBAN)

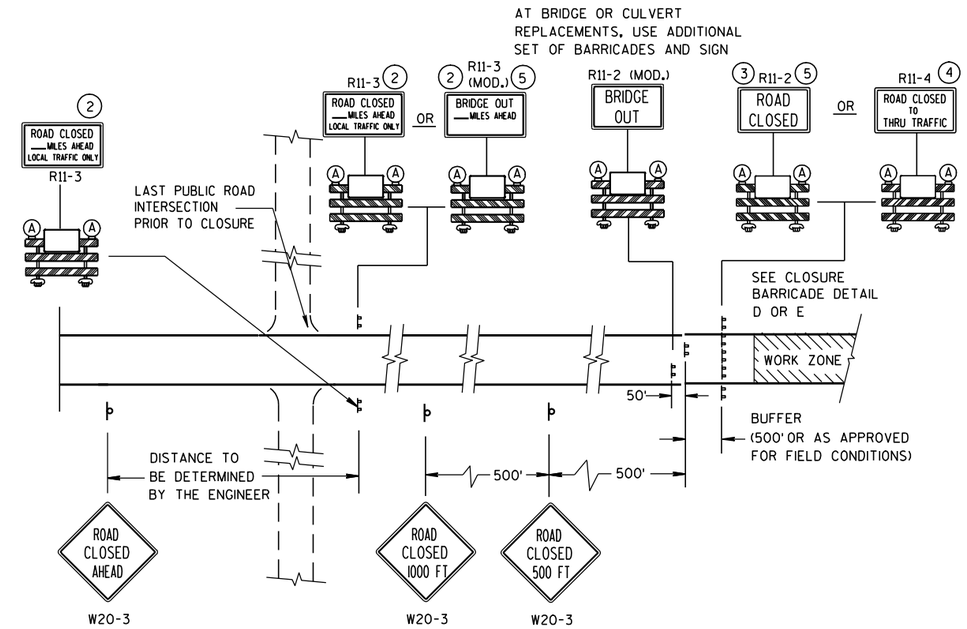

DETAIL C

MAINLINE CLOSURE, NO POSTED DETOUR

SPEED LIMIT (MPH)	"STOP AHEAD" ADVANCE WARNING DISTANCE (FT)
25	200
30	200
35	350
40	350
45	500
50	550
55	750

SEE SDD 15C2-4b FOR GENERAL NOTES AND FOOTNOTES 1 THROUGH 7

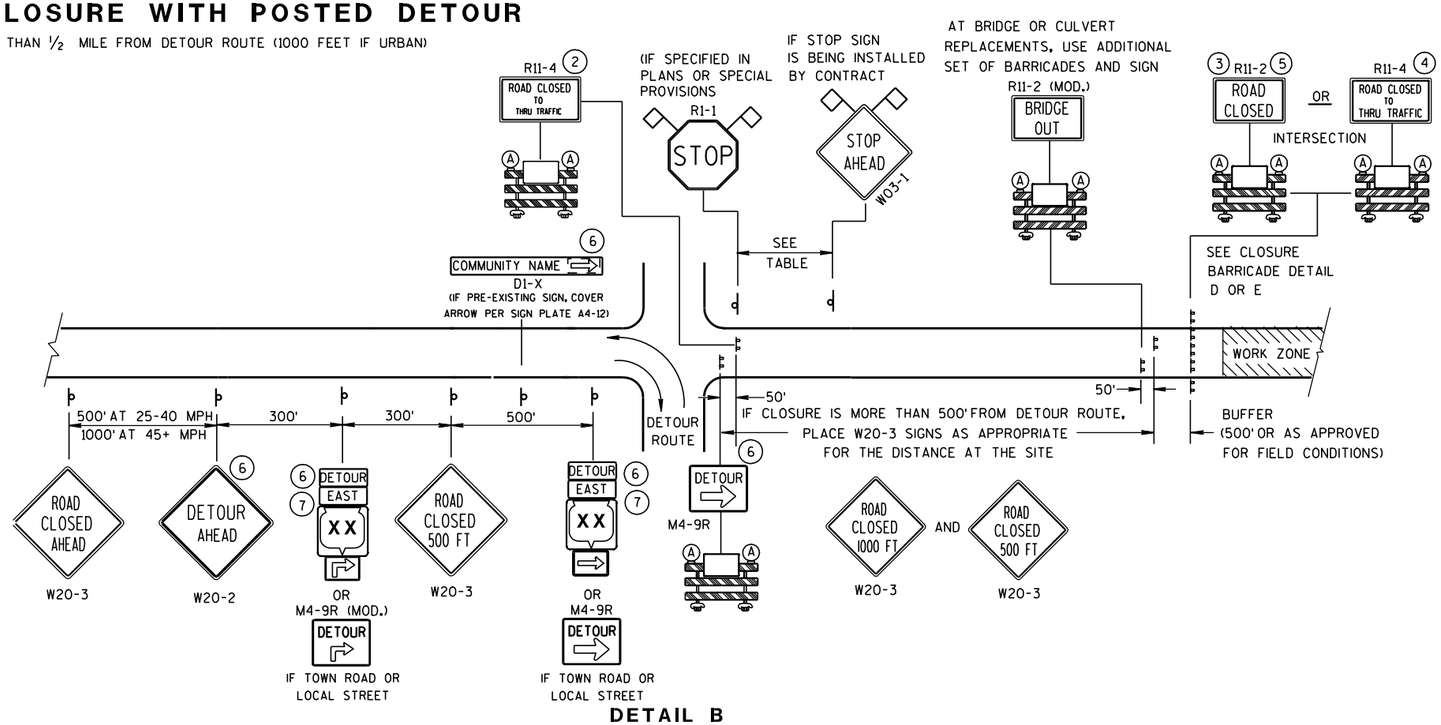

DETAIL B

MAINLINE CLOSURE WITH POSTED DETOUR

WORK ZONE LESS THAN 1/2 MILE FROM DETOUR ROUTE (1000 FEET IF URBAN)

LEGEND

- POST MOUNTED SIGN
- TYPE III BARRICADES
- TYPE "A" LOW INTENSITY FLASHING WARNING LIGHT (FOR NIGHT USE)
- WORK ZONE
- DETOUR / EAST — M4-8 / M3-X
- XX (M1-4) OR COUNTY XX (M1-5A) OR XX (M1-6)
- M05-1 OR M06-1
- FLAGS, 16" X 16" MIN., (ORANGE)

BARRICADES AND SIGNS FOR MAINLINE CLOSURES

STATE OF WISCONSIN
DEPARTMENT OF TRANSPORTATION

6

6

S.D.D. 15 C 2-4a

S.D.D. 15 C 2-4a

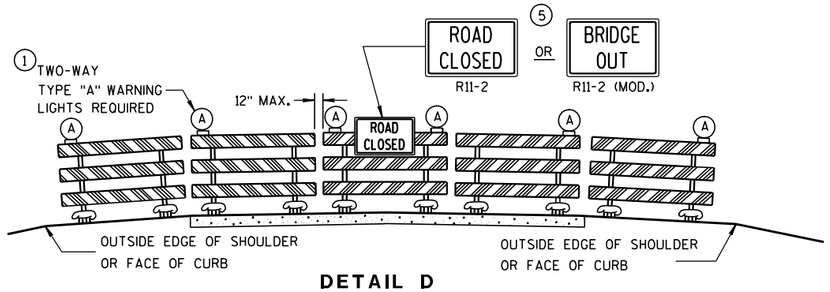

DETAIL D

ROAD CLOSURE BARRICADE DETAIL

APPROACH VIEW

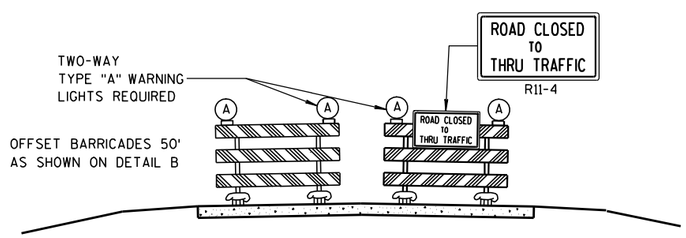

DETAIL E

LANE CLOSURE BARRICADE DETAIL

APPROACH VIEW

SEE SDD 15C2-4a FOR LEGEND

GENERAL NOTES

THE EXACT NUMBER, LOCATION, AND SPACING OF ALL SIGNS AND BARRICADES SHALL BE ADJUSTED TO FIT FIELD CONDITIONS AS APPROVED BY THE ENGINEER.

ANY SIGNS TEMPORARY OR EXISTING, WHICH CONFLICT WITH TRAFFIC CONTROL "IN USE" SHALL BE REMOVED OR COVERED AS NEEDED AND AS APPROVED BY THE ENGINEER.

THE SPACING BETWEEN TRAFFIC CONTROL SIGNS SHOULD BE ADJUSTED TO NOT CONFLICT WITH AND SHOULD PROVIDE A DESIRABLE MINIMUM OF 200 FEET CLEARANCE TO EXISTING SIGNS THAT WILL REMAIN IN PLACE.

BARRICADES THAT MUST BE MOVED FOR A WORK OPERATION SHALL BE IMMEDIATELY RE-ESTABLISHED UPON COMPLETION OF THE OPERATION OR, FOR CONTINUING OPERATIONS, AT THE END OF EACH WORKING DAY.

SIGNS THAT WILL BE IN PLACE LESS THAN 7 CONTINUOUS DAYS AND NIGHTS MAY BE MOUNTED ON PORTABLE SUPPORTS.

ALL TYPE III BARRICADES SHALL HAVE RAILS REFLECTORIZED ON BOTH FACES. STRIPES SHALL BE PROPERLY SLOPED DOWN TOWARD THE TRAFFIC SIDE OR AS SHOWN IN THE ROAD CLOSURE BARRICADE DETAIL D FOR FULL ROAD CLOSURES.

TYPE "A" LOW-INTENSITY FLASHING WARNING LIGHTS SHALL BE VISIBLE ON BOTH SIDES OF THE BARRICADE.

THE R11-2, R11-3, M4-9, R11-4 AND R10-61 SIGNS PLACED ON BARRICADES SHALL COVER NO MORE THAN THE TOP RAIL. THE SIGNS SHALL NOT COVER ANY PORTION OF THE MIDDLE OR BOTTOM RAILS.

THE REFLECTIVE SHEETING USED ON R11-2, R11-3, R11-4, R10-61 AND R1-1 SIGNS SHALL COMPLY WITH SUBSECTION 637.2.2.2 OF THE STANDARD SPECIFICATIONS.

"WO AND "MO" SIGNS ARE THE SAME AS "W" AND "M" SIGNS EXCEPT THE BACKGROUND IS ORANGE.

ALL SIGNS SHALL BE 48" X 48" UNLESS OTHERWISE NOTED BELOW:

- R11-2 SHALL BE 48" X 30".
- R11-3, R11-4 AND R10-61 SHALL BE 60" X 30".
- M4-9 SHALL BE 30" X 24".
- M3-X AND M4-8 SHALL BE 24" X 12". (30" X 15" IF NEEDED TO MATCH EXISTING SIGNS.)
- M1-4, M1-5A, AND M1-6 SHALL BE 24" X 24". (36" X 36" IF NEEDED TO MATCH EXISTING SIGNS.)
- M05-1 AND M06-1 SHALL BE 21" X 21". (30" X 30" IF NEEDED TO MATCH EXISTING SIGNS.)
- D1-X SHALL BE AS SHOWN ON SPECIFIC PROJECT SIGNING DETAIL SHEETS.
- R1-1 SHALL BE 36" X 36".

(1) TWO WARNING LIGHTS SHALL BE PROVIDED ON THE CENTER BARRICADE AND A MINIMUM OF ONE WARNING LIGHT SHALL BE PROVIDED ON EACH OF THE OTHER BARRICADES WITHIN THE ROADWAY LIMITS. SPACING OF THE WARNING LIGHTS SHALL BE UNIFORM TO THE EDGE OF ROADWAY AS SHOWN (APPROX. 8-FOOT LIGHT SPACING).

(2) THESE SIGNS AND BARRICADES ARE NOT REQUIRED IF ROAD CLOSURE BEGINS AT INTERSECTION.

(3) FOR ROAD CLOSURE WITHOUT LOCAL ACCESS TO PROJECT, SEE ROAD CLOSURE BARRICADE DETAIL D.

(4) FOR ROAD CLOSURE WITH LOCAL ACCESS TO PROJECT, SEE LANE CLOSURE BARRICADE DETAIL E.

(5) FOR BRIDGE OR CULVERT REPLACEMENTS, SUBSTITUTE "BRIDGE OUT" INSTEAD OF "ROAD CLOSED" ON R11-2 AND R11-3 SIGNS.

(6) INSTALL DETOUR AND COMMUNITY GUIDE SIGNS AND ARROWS ONLY IF SPECIFIED IN THE CONTRACT. IF THERE ARE EXISTING ROUTE MARKER ASSEMBLIES THAT WILL REMAIN IN PLACE, ADJUST THE LOCATION OF THE DETOUR ROUTE SIGNS TO CORRESPOND WITH THE EXISTING ASSEMBLIES. MODIFY EXISTING SIGNS WHERE POSSIBLE. SEE SPECIFIC PROJECT DETOUR SIGNING DETAIL SHEETS. IF DETOUR SIGNS ARE BEING INSTALLED BY OTHERS, PLACE THE CONTRACTED TRAFFIC CONTROL SIGNS TO ALLOW FOR PLACEMENT OF ALL WARNING, DETOUR AND GUIDE SIGNS AS SHOWN.

(7) "EAST" CARDINAL DIRECTION MARKERS AND RIGHT TURN ARROWS ARE SHOWN. USE OTHER CARDINAL DIRECTIONS AND ARROWS AS APPROPRIATE.

BARRICADES AND SIGNS FOR MAINLINE CLOSURES

STATE OF WISCONSIN
DEPARTMENT OF TRANSPORTATION

APPROVED

9/16/03 — DATE

/S/ Thomas N. N[illegible] — CHIEF SIGNS AND MAR[illegible]INEER

FHWA

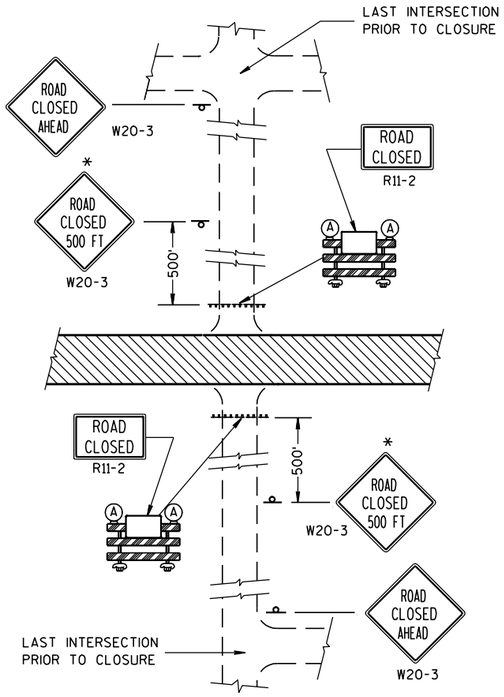

DETAIL 1

(NO ACCESS TO PROJECT)

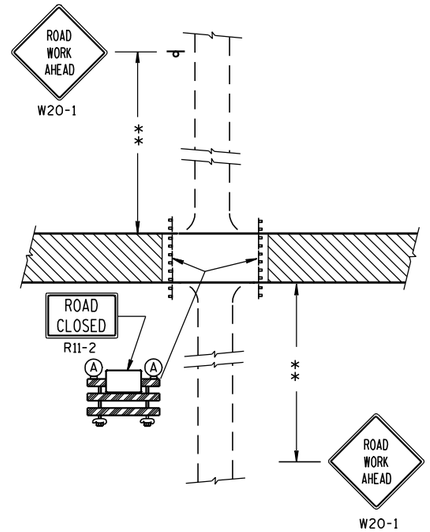

DETAIL 2

(PUBLIC CROSS-TRAFFIC MAINTAINED. NO ACCESS TO PROJECT).

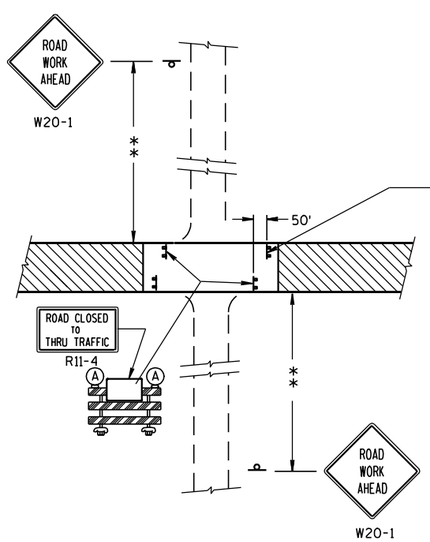

DETAIL 3

(PUBLIC CROSS-TRAFFIC MAINTAINED. CONTRACTOR, LOCAL BUSINESS AND RESIDENT ACCESS).

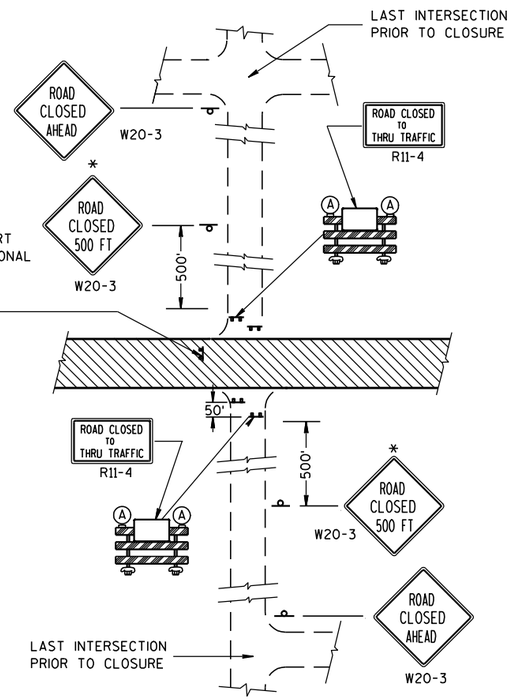

DETAIL 4

(CONTRACTOR, LOCAL BUSINESS AND RESIDENT ACCESS TO PROJECT)

GENERAL NOTES

THE EXACT NUMBER, LOCATION, AND SPACING OF ALL SIGNS AND BARRICADES SHALL BE ADJUSTED TO FIT FIELD CONDITIONS AS APPROVED BY THE ENGINEER.

ANY SIGNS TEMPORARY OR EXISTING, WHICH CONFLICT WITH TRAFFIC CONTROL "IN USE" SHALL BE REMOVED OR COVERED AS NEEDED AND AS APPROVED BY THE ENGINEER.

THE SPACING BETWEEN TRAFFIC CONTROL SIGNS SHOULD BE ADJUSTED TO NOT CONFLICT WITH AND SHOULD PROVIDE A DESIRABLE MINIMUM OF 200 FEET CLEARANCE TO EXISTING SIGNS THAT WILL REMAIN IN PLACE.

IF A "STOP" SIGN MUST BE REMOVED FOR A WORK OPERATION, A TEMPORARY "STOP" SIGN SHALL BE PLACED PRIOR TO THE SIGN REMOVAL, OR A FLAGGER SHALL BE PROVIDED UNTIL THE SIGN IS RE-ESTABLISHED.

BARRICADES THAT MUST BE MOVED FOR A WORK OPERATION SHALL BE IMMEDIATELY RE-ESTABLISHED UPON COMPLETION OF THE OPERATION OR, FOR CONTINUING OPERATIONS, AT THE END OF EACH WORKING DAY.

SIGNS THAT WILL BE IN PLACE LESS THAN 7 CONTINUOUS DAYS AND NIGHTS MAY BE MOUNTED ON PORTABLE SUPPORTS.

ALL TYPE III BARRICADES SHALL HAVE RAILS REFLECTORIZED ON BOTH FACES. STRIPES SHALL BE PROPERLY SLOPED DOWN TOWARD THE TRAFFIC SIDE OR AS SHOWN IN THE ROAD CLOSURE BARRICADE DETAIL D FOR FULL ROAD CLOSURES.

TYPE "A" LOW-INTENSITY FLASHING WARNING LIGHTS SHALL BE VISIBLE ON BOTH SIDES OF THE BARRICADE.

THE R11-2, R11-3 AND R11-4 SIGNS PLACED ON BARRICADES SHALL COVER NO MORE THAN THE TOP RAIL. THE SIGNS SHALL NOT COVER ANY PORTION OF THE MIDDLE OR BOTTOM RAILS.

THE REFLECTIVE SHEETING USED ON R11-2, R11-3 AND R11-4 SIGNS SHALL COMPLY WITH SUBSECTION 637.2.2.2 OF THE STANDARD SPECIFICATIONS.

ALL SIGNS SHALL BE 48" X 48" UNLESS OTHERWISE NOTED BELOW:
R11-2 SHALL BE 48" X 30".
R11-4 AND R11-3 SHALL BE 60" X 30".

*OMIT THE "ROAD CLOSED 500 FT." SIGN IF THE LAST INTERSECTION IS 500 FT. OR LESS FROM THE WORK ZONE.

**500' MAX. OR AT LAST INTERSECTION WHICHEVER IS CLOSER.

LEGEND

- POST MOUNTED WARNING SIGN
- TYPE III BARRICADES
- (A) TYPE "A" LOW INTENSITY FLASHING WARNING LIGHT (FOR NIGHT USE)
- WORK AREA

BARRICADES AND SIGNS FOR SIDEROAD CLOSURES

STATE OF WISCONSIN
DEPARTMENT OF TRANSPORTATION

APPROVED
9-16-03 — DATE
/S/ Thomas N. N[illegible] — CHIEF SIGNS AND MAR[illegible] INEER
FHWA

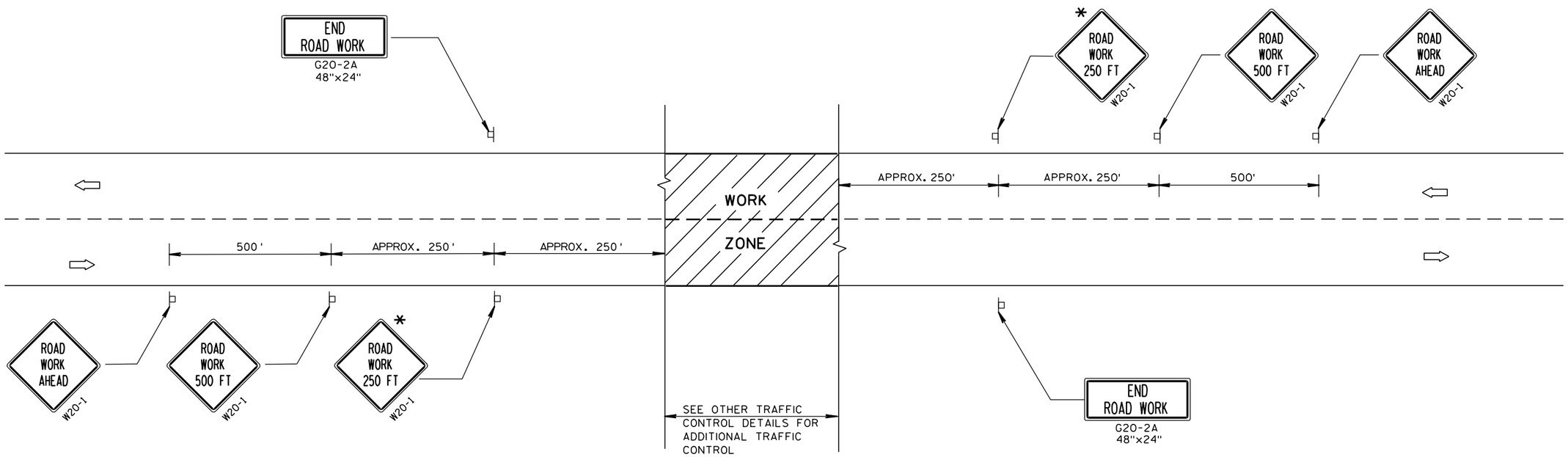

TYPICAL SIDEROAD APPROACH WARNING SIGN DETAIL

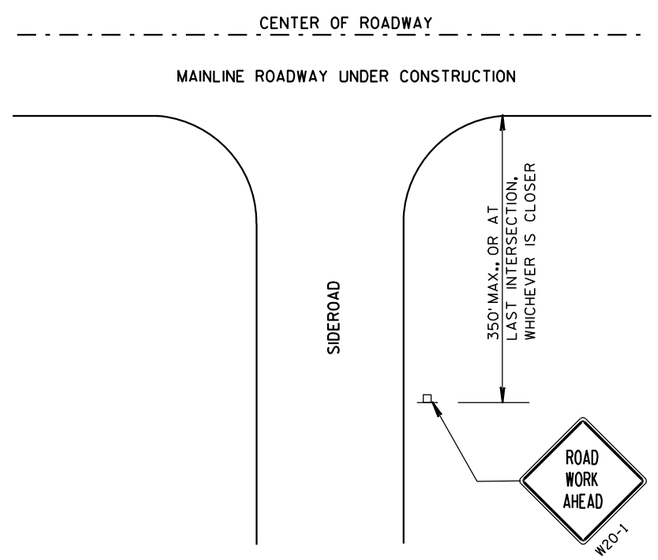

GENERAL NOTES

THE EXACT NUMBER, LOCATION, AND SPACING OF ALL SIGNS AND DEVICES SHALL BE ADJUSTED TO FIT FIELD CONDITIONS.

THE SPACING BETWEEN TRAFFIC CONTROL SIGNS SHOULD BE ADJUSTED TO NOT CONFLICT WITH AND SHOULD PROVIDE A DESIRABLE MINIMUM OF 200 FEET CLEARANCE TO EXISTING SIGNS THAT WILL REMAIN IN PLACE.

ALL SIGNS ARE 48"x48" UNLESS OTHERWISE NOTED. IF NECESSARY DUE TO SPACE CONSTRAINTS, 36"x36" SIGNS MAY BE USED INSTEAD OF 48"x48" SIGNS, IF APPROVED BY DISTRICT TRAFFIC UNIT.

SIGNS THAT WILL BE IN PLACE LESS THAN 7 CONTINUOUS DAYS AND NIGHTS MAY BE MOUNTED ON PORTABLE SUPPORTS.

IF A "STOP" SIGN MUST BE REMOVED FOR A WORK OPERATION, A TEMPORARY "STOP" SIGN SHALL BE PLACED PRIOR TO THE SIGN REMOVAL, OR A FLAGGER SHALL BE PROVIDED UNTIL THE SIGN IS RE-ESTABLISHED.

* THE THIRD W20-1 SIGN IS REQUIRED ONLY IF THERE IS AN INTERSECTION BETWEEN THE "ROAD WORK 500 FT" SIGN AND THE WORK ZONE. ADJUST THE PLACEMENT OF THIS SIGN BASED ON INTERSECTION LOCATION AND OTHER FIELD CONDITIONS.

LEGEND

POST MOUNTED SIGN

DIRECTION OF TRAFFIC FLOW

TRAFFIC CONTROL, ADVANCE WARNING SIGNS 40 M.P.H. OR LESS TWO-WAY UNDIVIDED ROAD OPEN TO TRAFFIC

STATE OF WISCONSIN
DEPARTMENT OF TRANSPORTATION

APPROVED
5/23/00 — DATE
/S/ Chester J. [illegible]
CHIEF SIGNS AND MARKING ENGINEER
FHWA

6

6

S.D.D. 15 C 5-1

S.D.D. 15 C 5-1

GENERAL NOTES

DETAILS OF INSTALLATION, MATERIALS AND WORKMANSHIP NOT SHOWN ON THIS DRAWING SHALL CONFORM TO THE PERTINENT REQUIREMENTS OF THE STANDARD SPECIFICATIONS AND APPLICABLE SPECIAL PROVISIONS.

ALL LETTERS, ARROWS AND SYMBOLS SHALL BE IN CONFORMANCE WITH REQUIREMENTS INCLUDED IN "STANDARD ALPHABETS FOR HIGHWAY SIGNS AND PAVEMENT MARKING" BOOK BY THE FEDERAL HIGHWAY ADMINISTRATION. ALL LETTERS, ARROWS AND SYMBOLS SHALL BE WHITE AND REFLECTORIZED. SMALL DIFFERENCES IN DIMENSIONS WITHIN THE TOLERANCES OF THAT BOOK ARE ACCEPTABLE.

A DETAILED DRAWING OF THE HANDICAPPED PARKING SYMBOL IS ILLUSTRATED IN THE "STANDARD HIGHWAY SIGNS MANUAL" BY THE FEDERAL HIGHWAY ADMINISTRATION.

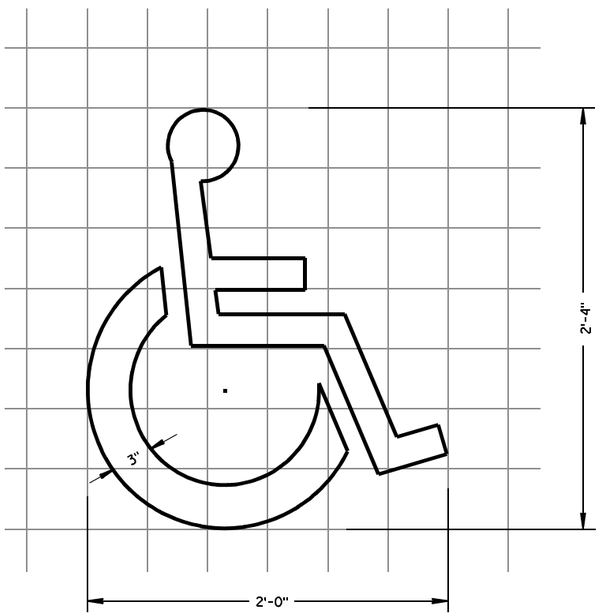

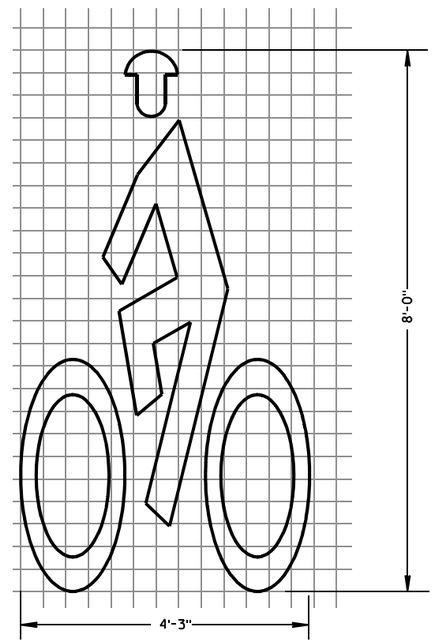

BIKE CROSSING SYMBOL

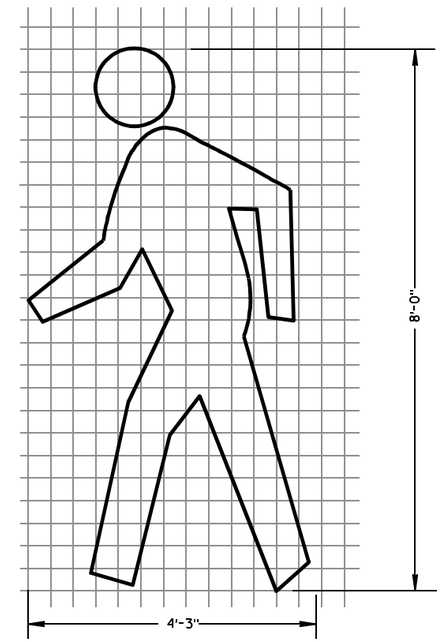

PEDESTRIAN SYMBOL

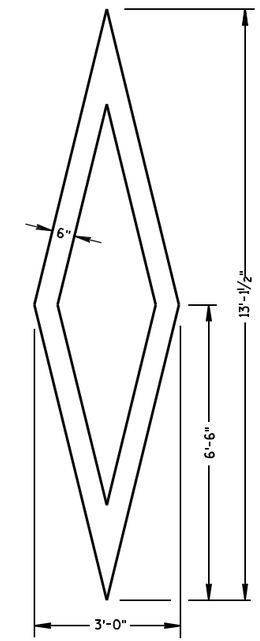

PREFERENTIAL LANE SYMBOL

6

6

S.D.D. 15 C 7-12a

S.D.D. 15 C 7-12a

PAVEMENT MARKING SYMBOLS

STATE OF WISCONSIN
DEPARTMENT OF TRANSPORTATION

APPROVED

7/1/11 — DATE

/S/ Thomas N Nathan — STATE TRAFFIC ENGINEER

FHWA

GENERAL NOTES

DETAILS OF INSTALLATION, MATERIALS AND WORKMANSHIP NOT SHOWN ON THIS DRAWING SHALL CONFORM TO THE PERTINENT REQUIREMENTS OF THE STANDARD SPECIFICATIONS AND APPLICABLE SPECIAL PROVISIONS.

ALL LETTERS, ARROWS AND SYMBOLS SHALL BE IN CONFORMANCE WITH REQUIREMENTS INCLUDED IN "STANDARD ALPHABETS FOR HIGHWAY SIGNS AND PAVEMENT MARKING" BOOK BY THE FEDERAL HIGHWAY ADMINISTRATION. ALL LETTERS, ARROWS AND SYMBOLS SHALL BE WHITE AND REFLECTORIZED. SMALL DIFFERENCES IN DIMENSIONS WITHIN THE TOLERANCES OF THAT BOOK ARE ACCEPTABLE.

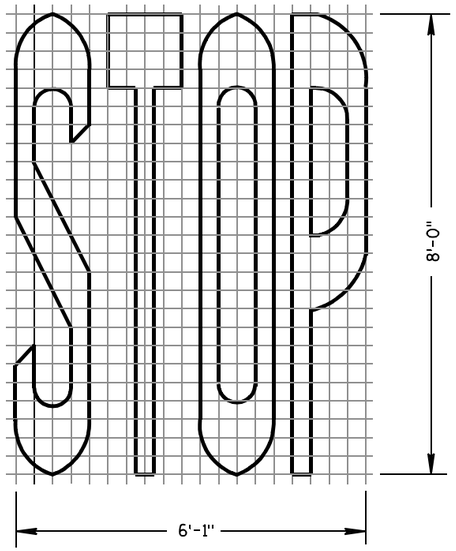

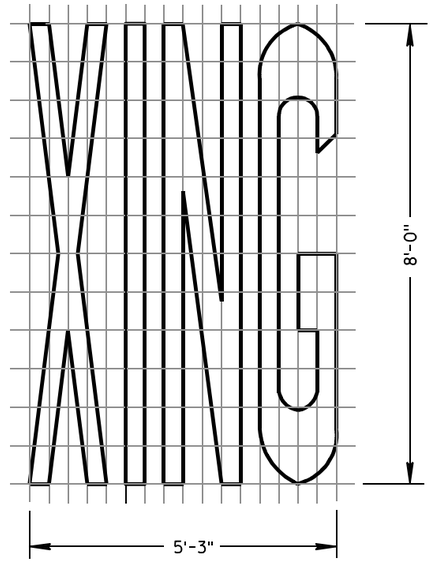

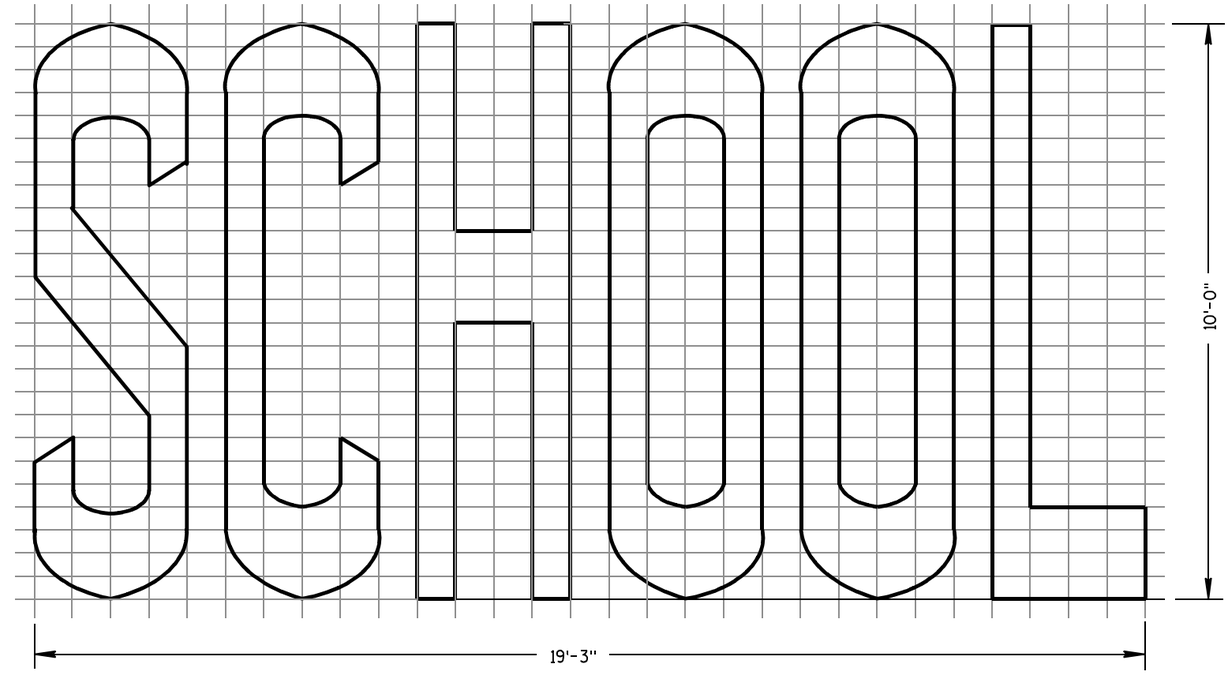

TWO-LANE

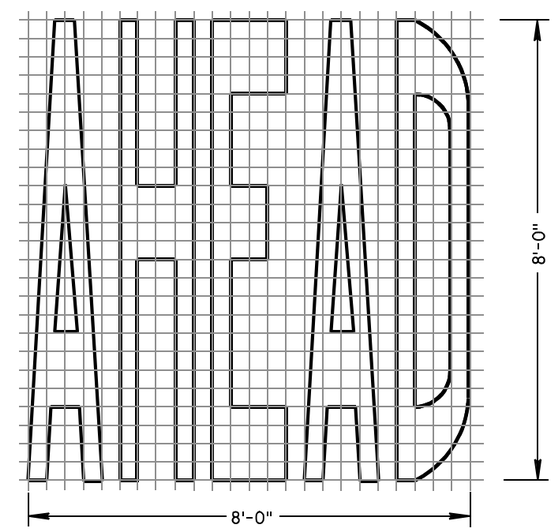

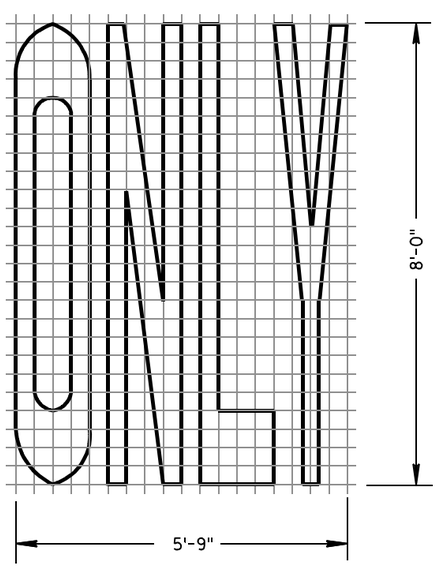

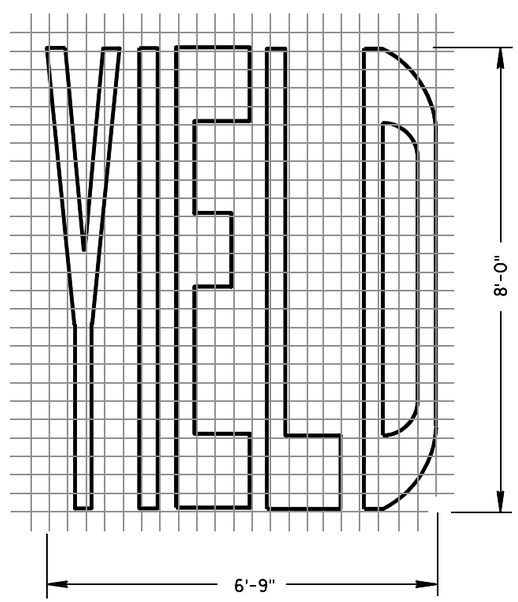

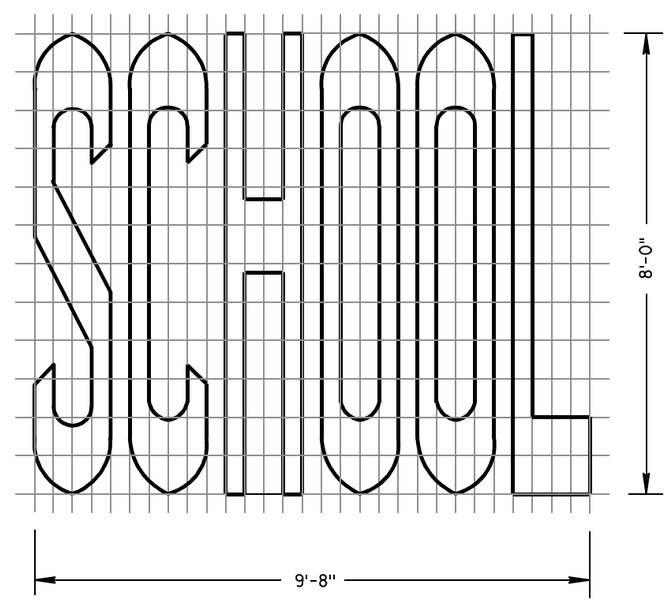

SINGLE-LANE

6

6

S.D.D. 15 C 7-12b

S.D.D. 15 C 7-12b

PAVEMENT MARKING WORDS

STATE OF WISCONSIN
DEPARTMENT OF TRANSPORTATION

APPROVED

7-1-11 — DATE

/S/ Thomas N. Notbohm — STATE TRAFFIC ENGINEER

FHWA

GENERAL NOTES

DETAILS OF INSTALLATION, MATERIALS AND WORKMANSHIP NOT SHOWN ON THIS DRAWING SHALL CONFORM TO THE PERTINENT REQUIREMENTS OF THE STANDARD SPECIFICATIONS AND APPLICABLE SPECIAL PROVISIONS.

ALL LETTERS, ARROWS AND SYMBOLS SHALL BE IN CONFORMANCE WITH REQUIREMENTS INCLUDED IN "STANDARD ALPHABETS FOR HIGHWAY SIGNS AND PAVEMENT MARKING" BOOK BY THE FEDERAL HIGHWAY ADMINISTRATION. ALL LETTERS, ARROWS AND SYMBOLS SHALL BE WHITE AND REFLECTORIZED. SMALL DIFFERENCES IN DIMENSIONS WITHIN THE TOLERANCES OF THAT BOOK ARE ACCEPTABLE.

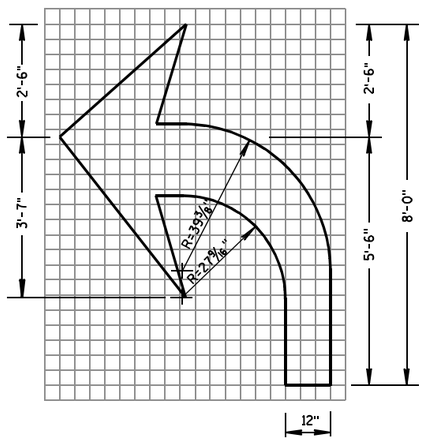

TYPE 2

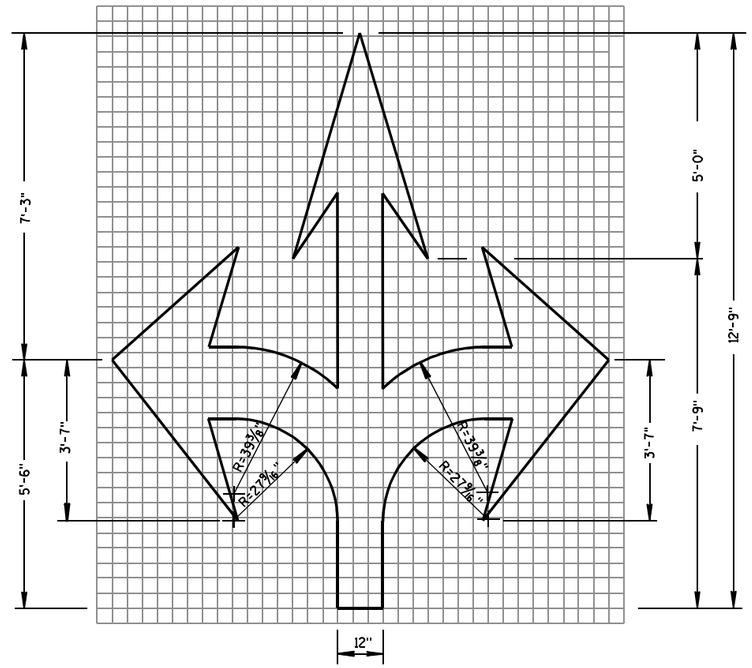

TYPE 6

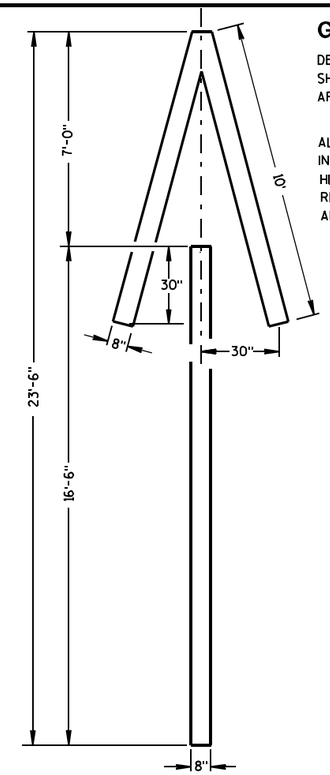

TYPE 4

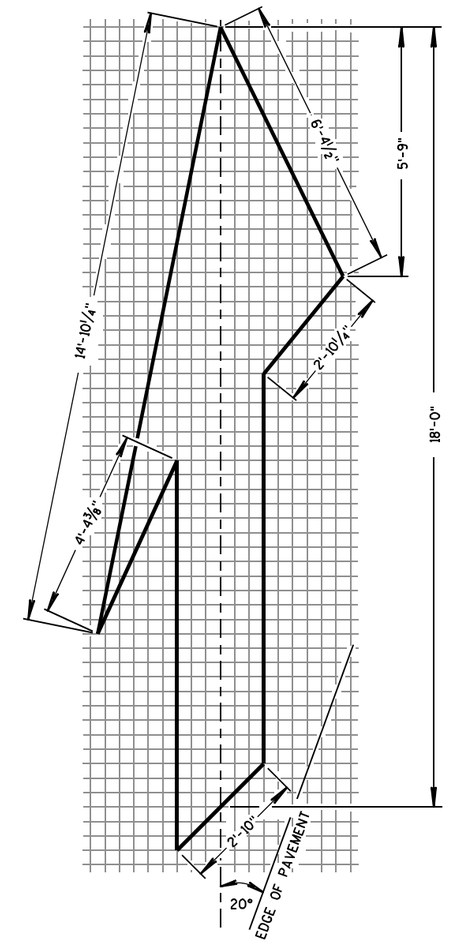

TYPE 5 LANE DROP ARROW

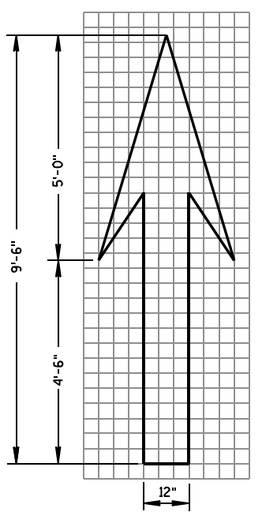

TYPE 1

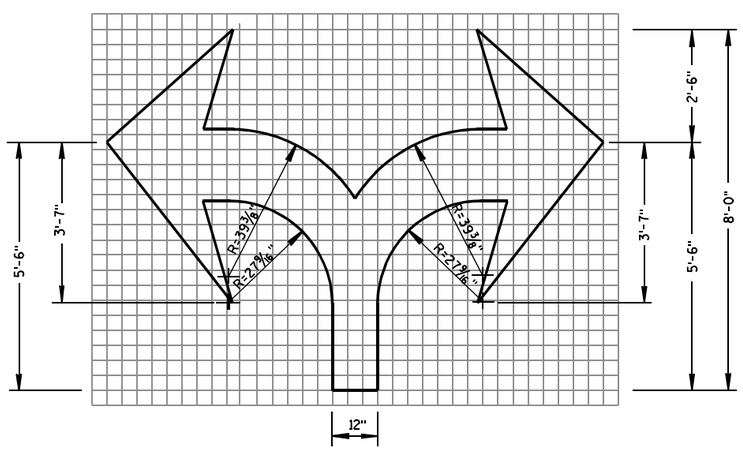

TYPE 7

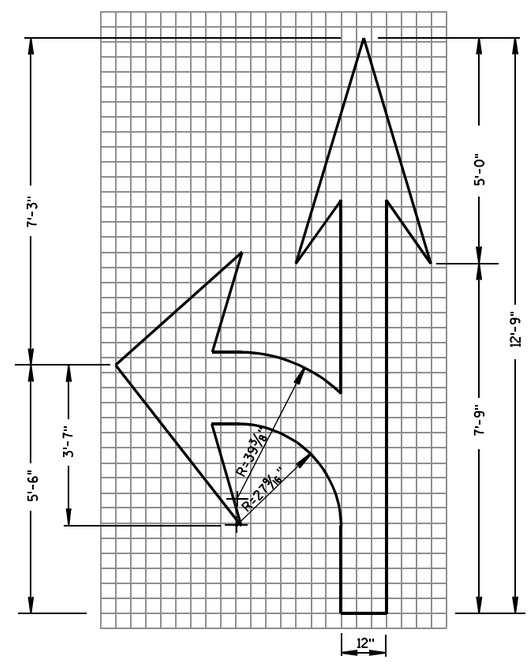

TYPE 3

PAVEMENT MARKING ARROWS

STATE OF WISCONSIN
DEPARTMENT OF TRANSPORTATION

APPROVED

7/1/11	/S/ Thomas N. Nothohm
DATE	STATE TRAFFIC ENGINEER

FHWA

6

6

S.D.D. 15 C 7-12c

S.D.D. 15 C 7-12c

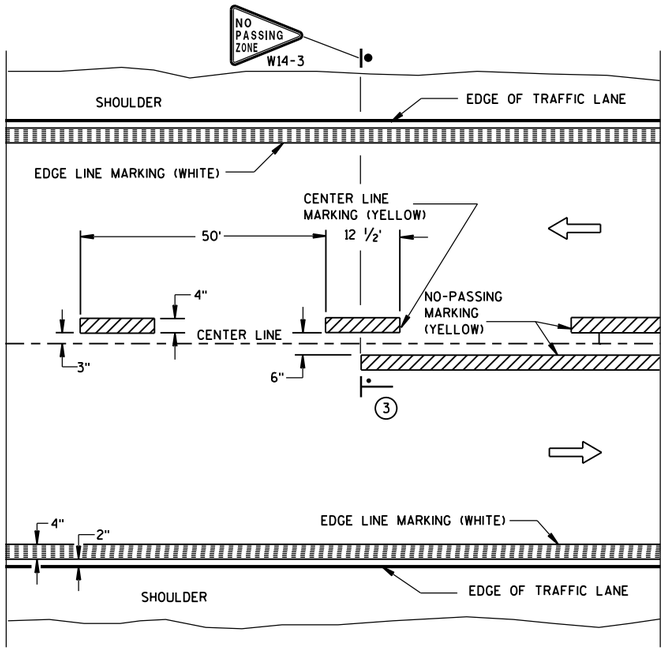

TWO WAY TRAFFIC

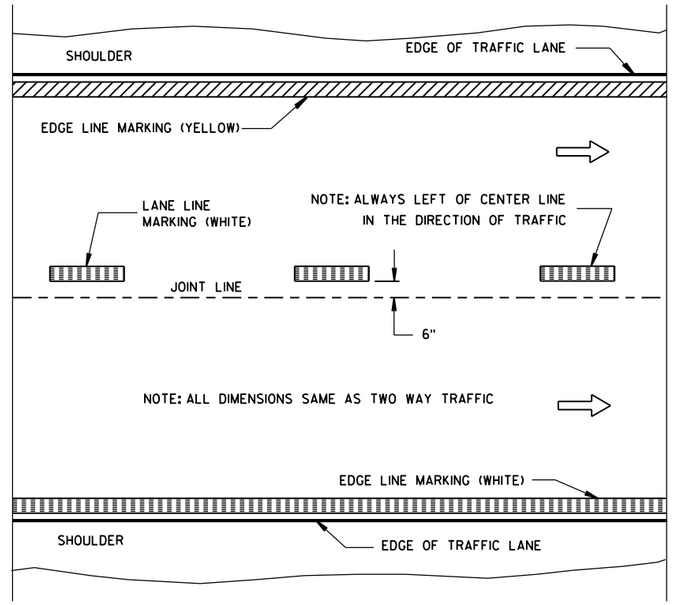

ONE WAY TRAFFIC

PERMANENT PAVEMENT MARKING

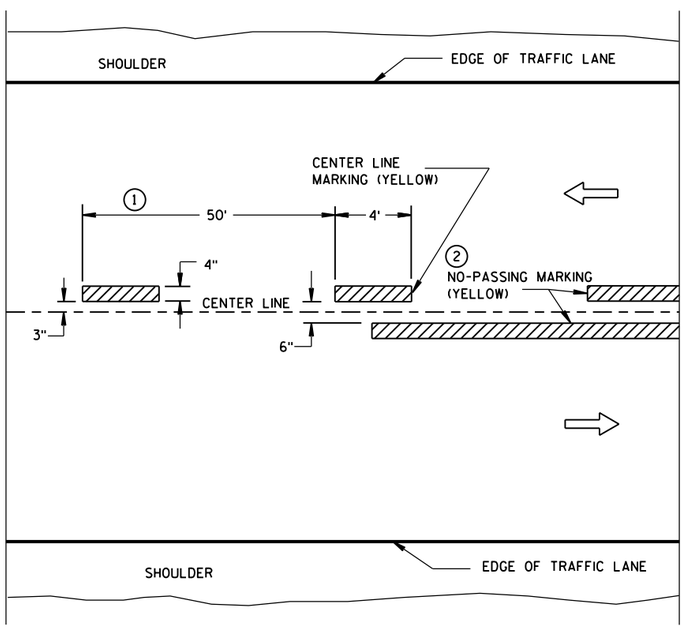

TWO WAY TRAFFIC

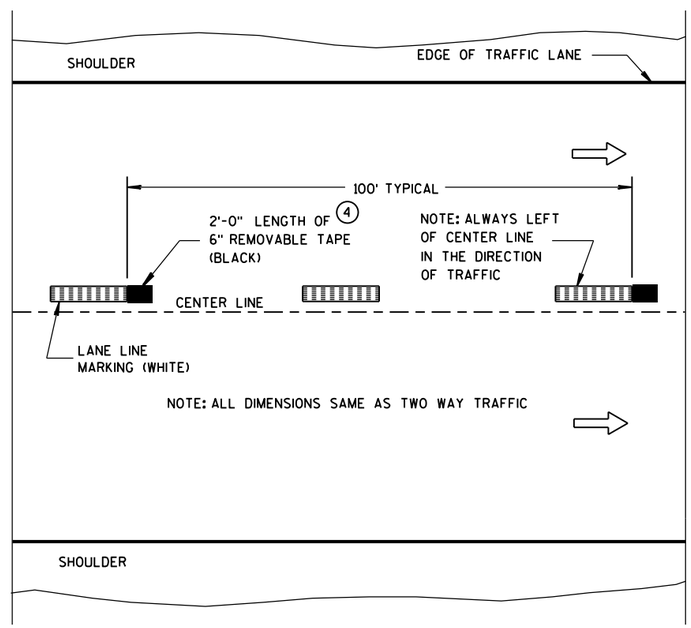

ONE WAY TRAFFIC

TEMPORARY (INTERMEDIATE) PAVEMENT MARKING

(SHOWS CYCLE FOR TEMPORARY CENTER LINE OR TEMPORARY LANE LINE MARKING)

GENERAL NOTES

DETAILS OF CONSTRUCTION NOT SHOWN ON THIS DRAWING SHALL CONFORM TO STANDARD SPECIFICATIONS AND SPECIAL PROVISIONS.

1. HALF CYCLE LENGTHS (25'±) WITH 2' MINIMUM STRIPE LENGTHS SHALL BE PROVIDED ON ROADWAYS (INCLUDING TEMPORARY TRAVELED WAYS) WITH REVERSE CURVATURE, CURVATURE OF OVER 5 DEGREES OR WHEN DIRECTED BY THE ENGINEER TO MARK UNUSUAL ALIGNMENT OF THE TRAVELED WAY.
2. NO PASSING ZONE TEMPORARY PAVEMENT MARKING IS REQUIRED TO BE PLACED, WHERE APPROPRIATE, ALONG WITH CENTERLINE TEMPORARY PAVEMENT MARKING WHEN A SAME DAY PERMANENT PAVEMENT MARKING ITEM IS INCLUDED IN THE CONTRACT.
3. NO PASSING ZONE MARKINGS ARE PLACED ACCORDING TO "T" MARKINGS. IF EXISTING NO PASSING ZONE W14-3 SIGNS ARE BEYOND 50 FEET IN EITHER DIRECTION, THE SIGNS SHALL BE MOVED TO THE "T" MARKINGS.
4. CONCRETE ONLY.

NOTE

ARROW SYMBOL (⇨) SHOWS DIRECTION OF TRAVEL

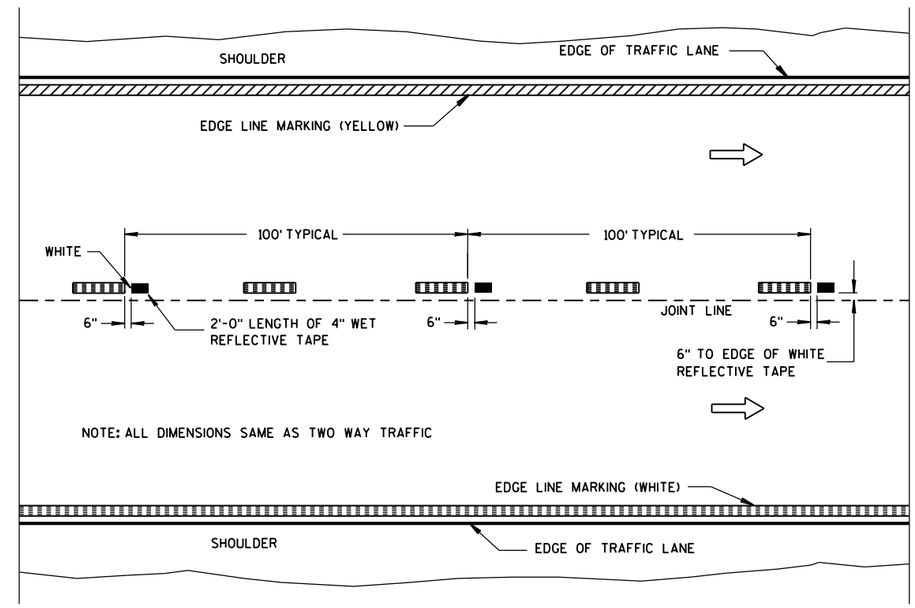

WET REFLECTIVE TAPE SUPPLEMENT TO SPRAYED OR NON WET REFLECTIVE TAPE LANE LINE

LEGEND

"T" MARKING

POST MOUNTED SIGN

PAVEMENT MARKING (MAINLINE)

STATE OF WISCONSIN
DEPARTMENT OF TRANSPORTATION

APPROVED
10-1-2012 /S/ Travis Feltes
DATE STATE TRAFFIC ENGINEER
FHWA

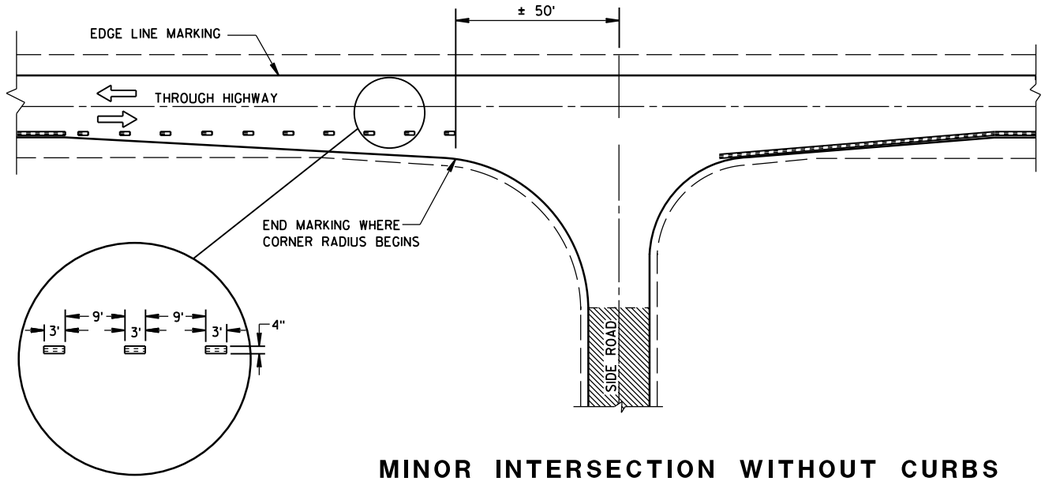

MINOR INTERSECTION WITHOUT CURBS

GENERAL NOTES

EDGE LINES SHALL BE OMITTED THROUGH INTERSECTIONS. EDGE LINES SHALL BE CONTINUED THROUGH DRIVEWAYS.

(1) WHEN DISTANCE "A" IS LESS THAN 250 FEET, OMIT LANE LINE.

(2) WHEN DISTANCE "B" IS LESS THAN 100 FEET, OMIT CHANNELIZING LANE LINE.

(3) ALTERNATIVE MARKING SHALL BE PROVIDED WHEN SPECIFIED IN THE CONTRACT. TYPICAL SITUATIONS WHERE THIS MARKING MAY BE REQUIRED ARE WHERE THE INTERSECTION IS ON A SHARP HORIZONTAL CURVE OR CREST VERTICAL CURVE IN AN UNLIGHTED AREA SUCH THAT THE EDGE LINE MAY BE MISLEADING TO THE MOTORIST OR DISAPPEAR FROM SIGHT.

(4) THE EDGE LINE IN THE TAPER AREAS OF THE BYPASS LANE AND THE BYPASS LANE SHALL BE LOCATED 1-FOOT FROM EDGE OF PAVEMENT TO THE OUTSIDE EDGE OF EDGE LINE.

(5) BARRIER LINE ENDS AT SIDE ROAD PAVEMENT/SURFACE EDGE EXTENSION.

(6) BARRIER LINE STARTS 500 FEET PRIOR TO THE BYPASS TAPER.

(7) IF THE DISTANCE BETWEEN 2 SUCCESSIVE NO-PASSING ZONES IS LESS THAN THE MINIMUM DISTANCE BETWEEN ZONES, CONNECT THE 2 ZONES.

(8) 3' LINE 9' GAP, EXCEPT RETRACE THE EXISTING LINE - GAP PATTERN WHERE EXISTING MARKINGS ARE IN PLACE.

ARROW SYMBOL (⇨) SHOWS DIRECTION OF TRAVEL

(7)

POSTED SPEED (MPH)	MINIMUM DISTANCE BETWEEN ZONES (FEET)
25 - 30	528
35 - 40	528
45 - 50	686
55	792

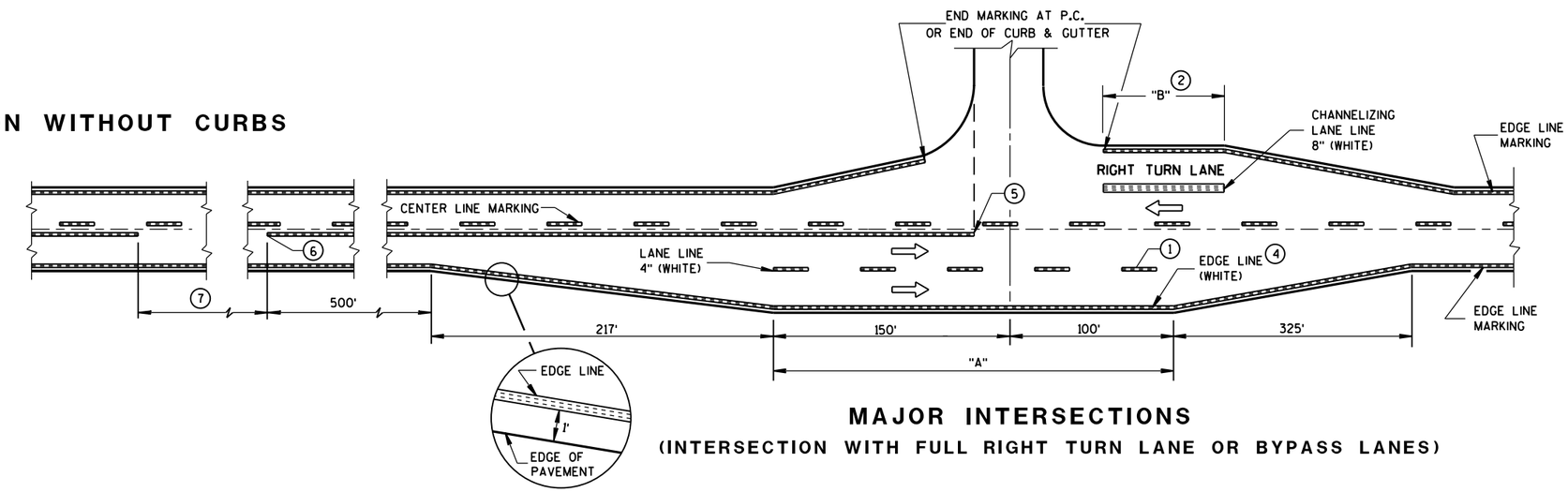

MAJOR INTERSECTIONS

(INTERSECTION WITH FULL RIGHT TURN LANE OR BYPASS LANES)

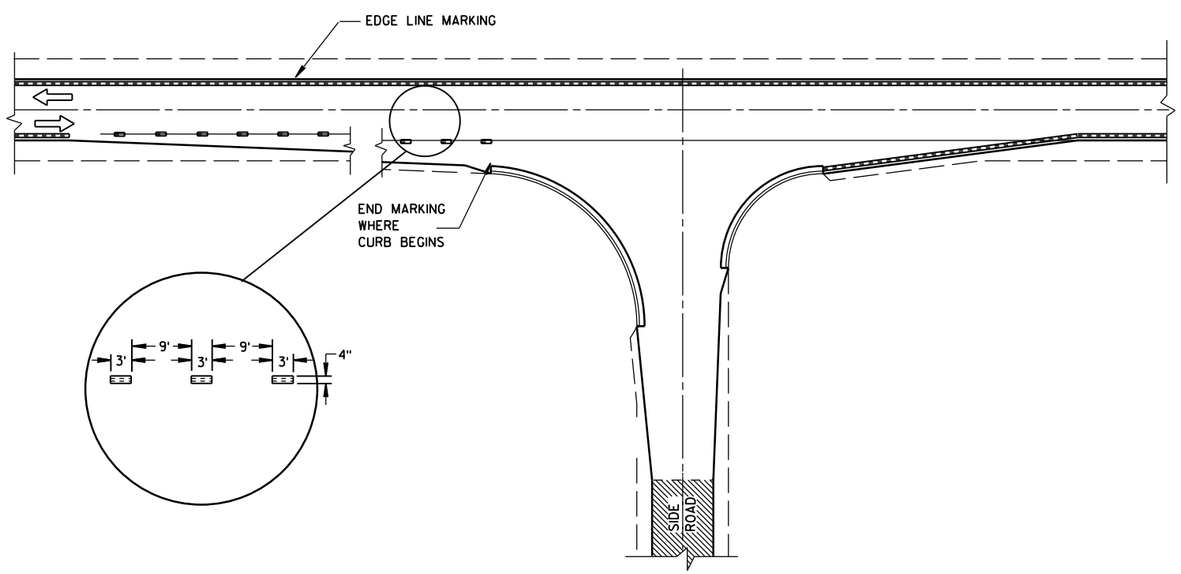

MINOR INTERSECTION WITH CURBS

(TYPICAL MARKING)

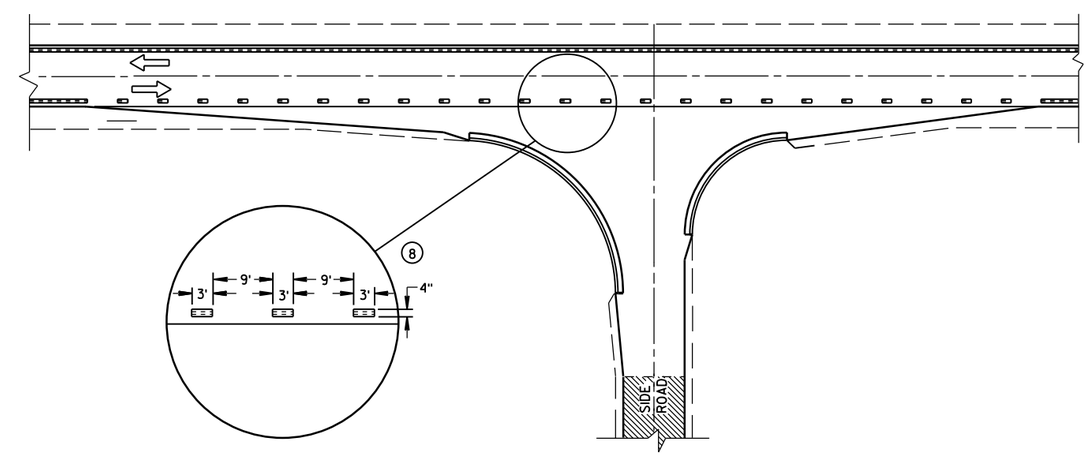

MINOR INTERSECTION WITH CURBS

(3) (FOR SPECIAL CONDITIONS AS SPECIFIED)

PAVEMENT MARKING
(INTERSECTIONS)

STATE OF WISCONSIN
DEPARTMENT OF TRANSPO

6

S.D.D. 15 C 8-15b

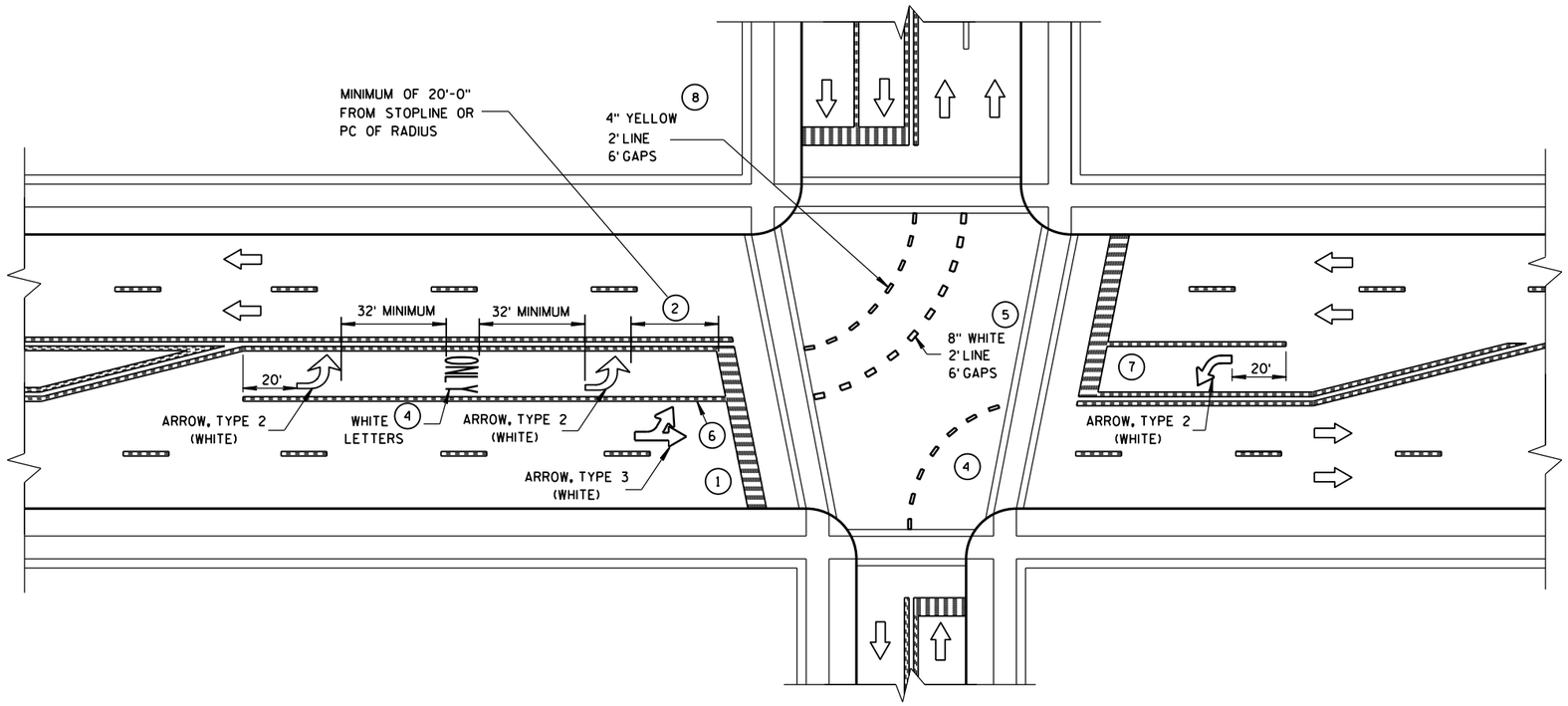

GENERAL NOTES

1. STOP BAR IS REQUIRED ONLY WHEN SPECIFIED IN THE CONTRACT.
2. DISTANCE MAY BE ADJUSTED TO ACCOMODATE SHORT LEFT TURN LANES. AS APPROVED BY THE ENGINEER.
3. A SET OF ARROWS IS REQUIRED EVERY 400' OR NEAR INTERSECTIONS OR DRIVEWAYS WITH TURNING TRAFFIC.
4. ADD EXTRA ARROW AND ONLY PER 160' OR WHEN ON A CURVE.
5. 8" WHITE WITH 2' LINE 6' GAPS FOR DUAL TURN LANE.
6. 8" WHITE
7. ADD SECOND ARROW WHEN TURN BAY IS GREATER THAN OR EQUAL TO 108'.
8. REQUIRED ONLY WHEN SPECIFIED IN THE CONTRACT.

NOTE:
ARROW SYMBOL (⇨)
SHOWS DIRECTION OF TRAVEL

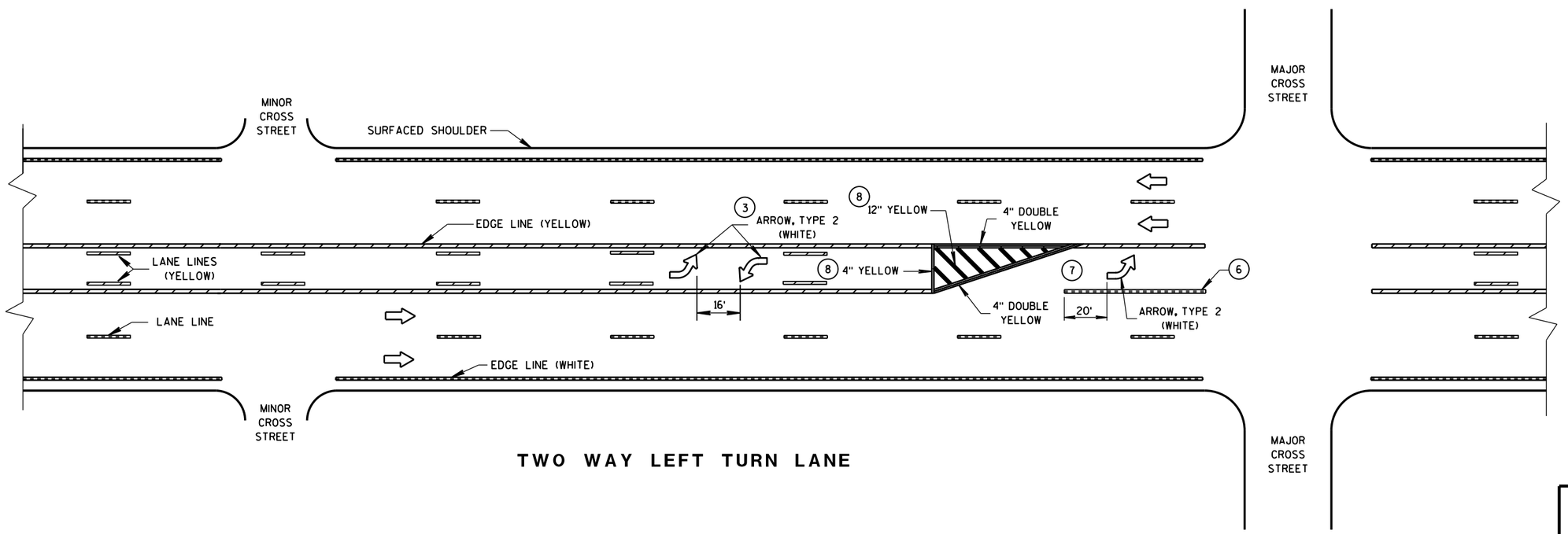

TWO WAY LEFT TURN LANE

PAVEMENT MARKING
(LEFT TURN LANE)

STATE OF WISCONSIN
DEPARTMENT OF TRANSPOR

6

S.D.D. 15 C 8-15e

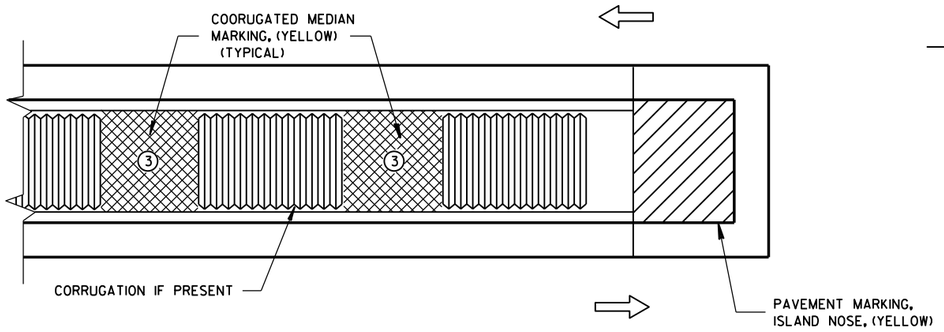

MEDIAN ISLAND WITH SQUARE BLUNT NOSE

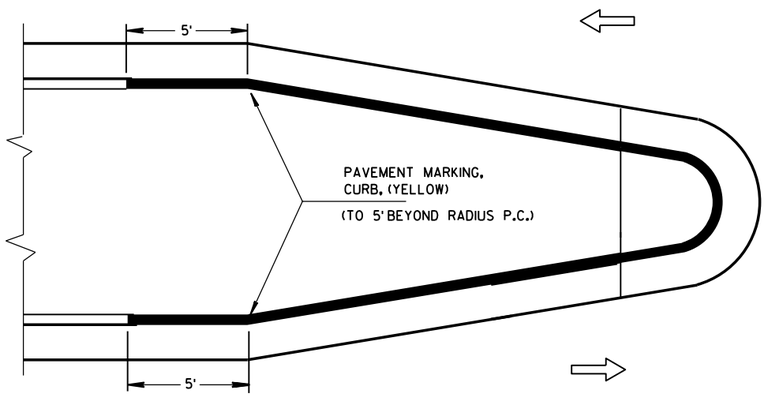

MEDIAN ISLAND WITH ROUND BLUNT NOSE

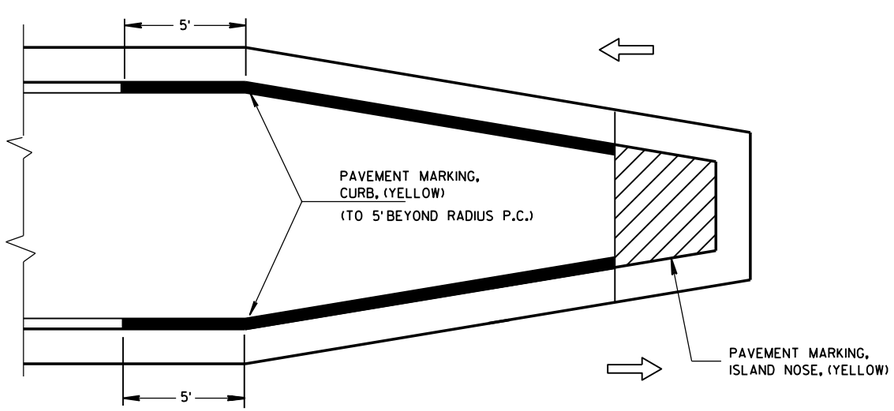

MEDIAN ISLAND WITH SLOPED NOSE

TYPICAL PLACEMENT OF PAVEMENT MARKING ON MEDIAN ISLANDS

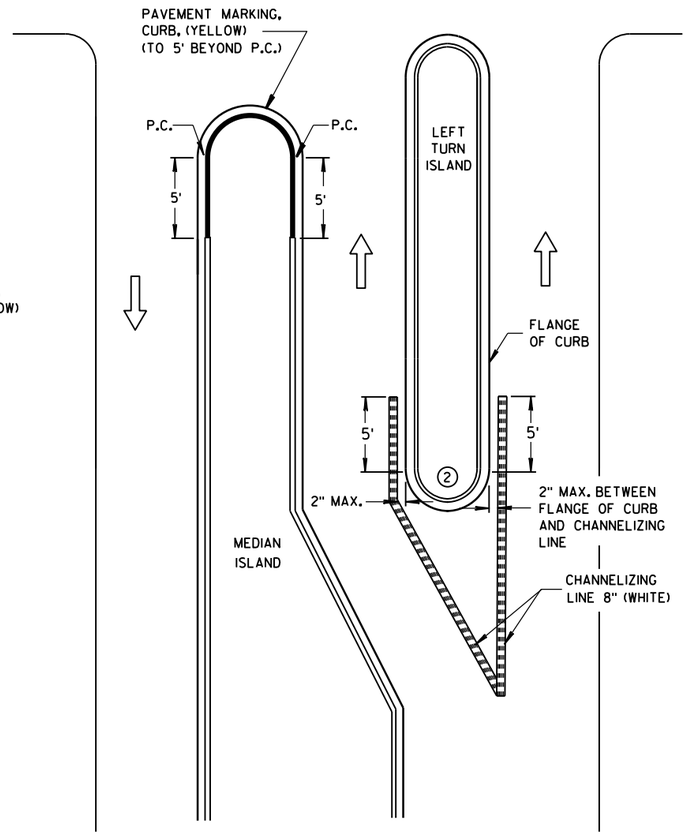

LEFT TURN & MEDIAN ISLAND

GENERAL NOTES

1. STOP LINE IS REQUIRED ONLY WHEN SPECIFIED IN THE CONTRACT.
2. DO NOT MARK CURB NOSES THAT SEPARATE LANES OF TRAFFIC TRAVELING IN THE SAME DIRECTION.
3. WHEN CONCRETE CORRUGATED MEDIAN IS CONSTRUCTED TO SEPARATE TRAFFIC OPERATING IN THE OPPOSING DIRECTION YELLOW PAVEMENT MARKING SHALL BE APPLIED TO THE FLAT PORTION OF THE CONCRETE CORRUGATED MEDIAN. THE ITEM OF PAVEMENT MARKING, CONCRETE CORRUGATED MEDIAN, WILL BE MEASURED IN PLACE AND AND ACCEPTED IN ACCORDANCE WITH THE CONTRACT AND PAID FOR AT THE CONTRACT UNIT PRICE PER SQUARE FOOT.

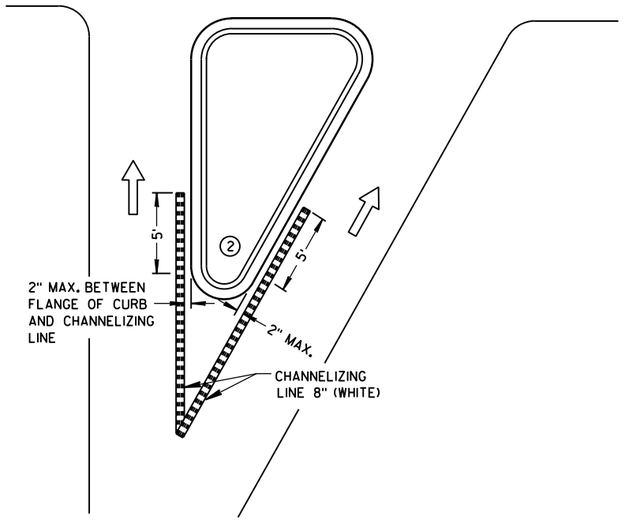

RIGHT TURN ISLAND

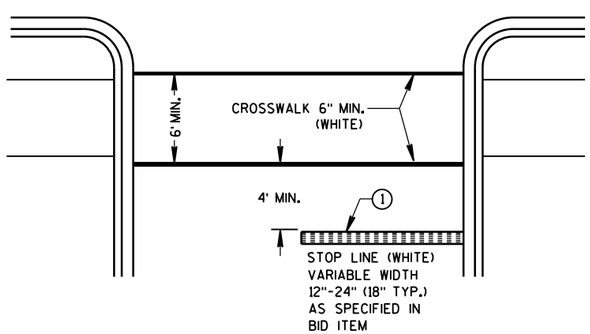

STOP LINE AND CROSSWALK

LEGEND

- ISLAND NOSE MARKING
- CURB MARKING
- CORRUGATED MEDIAN MARKING
- DIRECTION OF TRAVEL

PAVEMENT MARKING (ISLANDS, STOP LINE & CROSS WALK)

STATE OF WISCONSIN
DEPARTMENT OF TRANSPOI

6

6

S.D.D. 15 C 8-15f

S.D.D. 15 C 8-15f

TWO-LANE ROADWAY

SYMBOLS

WORK AREA

FLAGGER, EQUIPPED WITH STOP/SLOW PADDLE FASTENED ON SUPPORT STAFF

SIGN ON PORTABLE OR PERMANENT SUPPORT

USE OF THE "BE PREPARED TO STOP" SIGN IS OPTIONAL. WHEN USED, THIS SIGN SHALL BE LOCATED BETWEEN THE W20-7a AND W20-4 SIGNS. A 500' TYPICAL SPACING SHALL BE PROVIDED BETWEEN THE SIGNS.

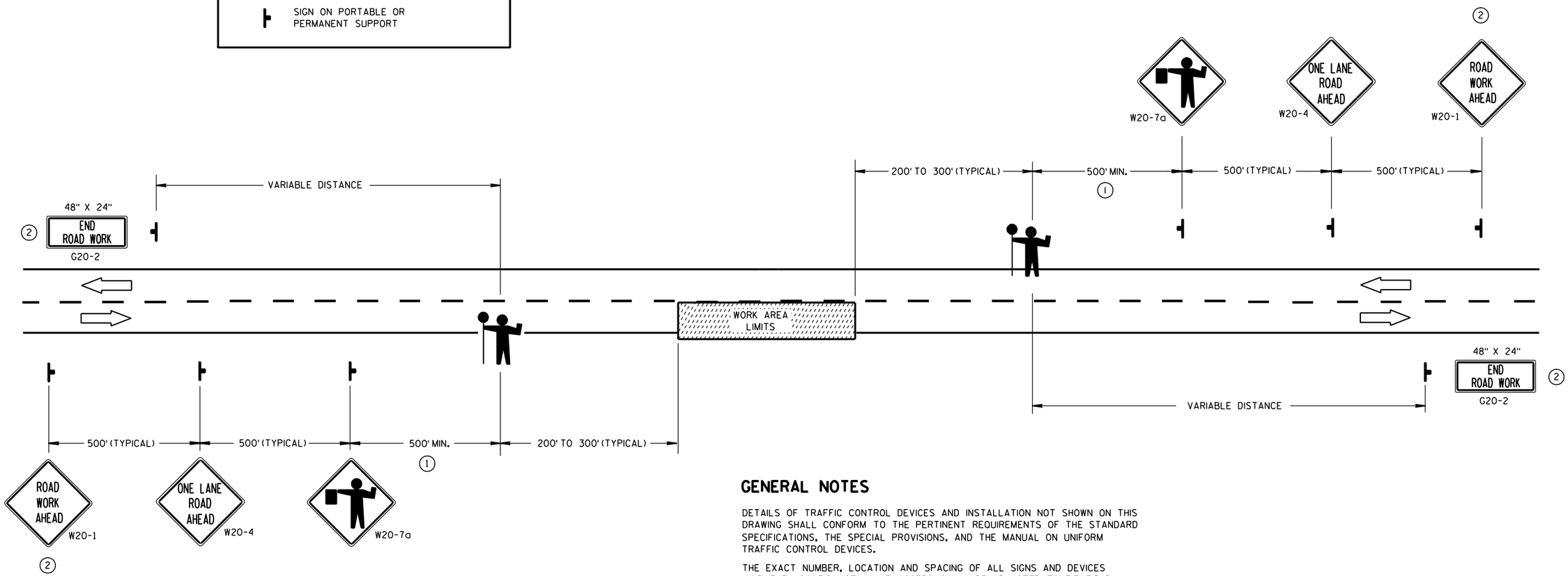

1. FOR A MOVING WORK OPERATION, SIGNING FOR BOTH DIRECTIONS SHALL BE REESTABLISHED (AS SIMULTANEOUSLY AS PRACTICAL) AT APPROXIMATELY 3500 FOOT INTERVALS IN THE MOVING WORK OPERATION OR AS APPROVED BY THE ENGINEER.

2. SIGN NOT REQUIRED IF FLAGGING OPERATION OCCURS WITHIN A SIGNED ROAD WORK ZONE AREA.

GENERAL NOTES

DETAILS OF TRAFFIC CONTROL DEVICES AND INSTALLATION NOT SHOWN ON THIS DRAWING SHALL CONFORM TO THE PERTINENT REQUIREMENTS OF THE STANDARD SPECIFICATIONS, THE SPECIAL PROVISIONS, AND THE MANUAL ON UNIFORM TRAFFIC CONTROL DEVICES.

THE EXACT NUMBER, LOCATION AND SPACING OF ALL SIGNS AND DEVICES (AND THE LOCATION OF ALL FLAGGERS) SHALL BE ADJUSTED TO FIT FIELD CONDITIONS AS APPROVED BY THE ENGINEER.

THE FIRST ADVANCE WARNING SIGN SHOULD TYPICALLY BE LOCATED IN ADVANCE OF THE ANTICIPATED TRAFFIC BACKUP OR QUEUE.

WHEN A SIDE ROAD OR RAMP INTERSECTS THE FACILITY ON WHICH THE WORK IS BEING PERFORMED, ADDITIONAL TRAFFIC CONTROLS SHALL BE PROVIDED AS SPECIFIED IN THE PLANS AND/OR THE SPECIAL PROVISIONS OR AS APPROVED BY THE ENGINEER.

FLAGGERS SHALL BE IN SIGHT OF EACH OTHER OR IN DIRECT COMMUNICATION AT ALL TIMES. THEY SHALL BE EQUIPPED WITH STOP/SLOW PADDLES FASTENED ON SUPPORT STAFFS. WHEN THE FLAGGING OPERATION IS NOT IN EFFECT, THE "FLAGGER AHEAD", THE "ROAD WORK AHEAD" AND THE ONE LANE ROAD AHEAD" SIGNS SHALL BE COVERED OR REMOVED AND THE HIGHWAY RESTORED TO NORMAL OPERATION.

ALL SIGNS ARE 48" X 48" UNLESS OTHERWISE NOTED.

TRAFFIC CONTROL FOR LANE CLOSURE (SUITABLE FOR MOVING OPERATIONS)

STATE OF WISCONSIN
DEPARTMENT OF TRANSPORTATION

APPROVED
9/5/06 — DATE
/S/ Thomas N. Nothohm — STATE TRAFFIC ENGINEER
FHWA

6
S.D.D. 15 C 12-3

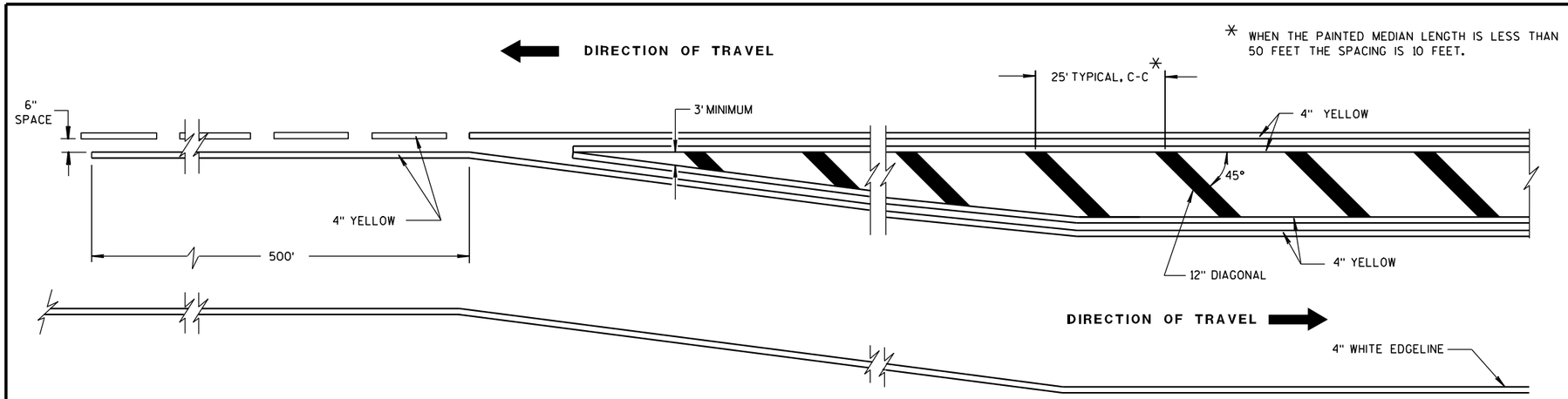

MEDIAN ISLAND DETAIL

GENERAL NOTE

DIAGONALS ARE OPTIONAL WHEN PAINTED ISLAND IS LESS THAN 6 FEET AT WIDEST POINT.

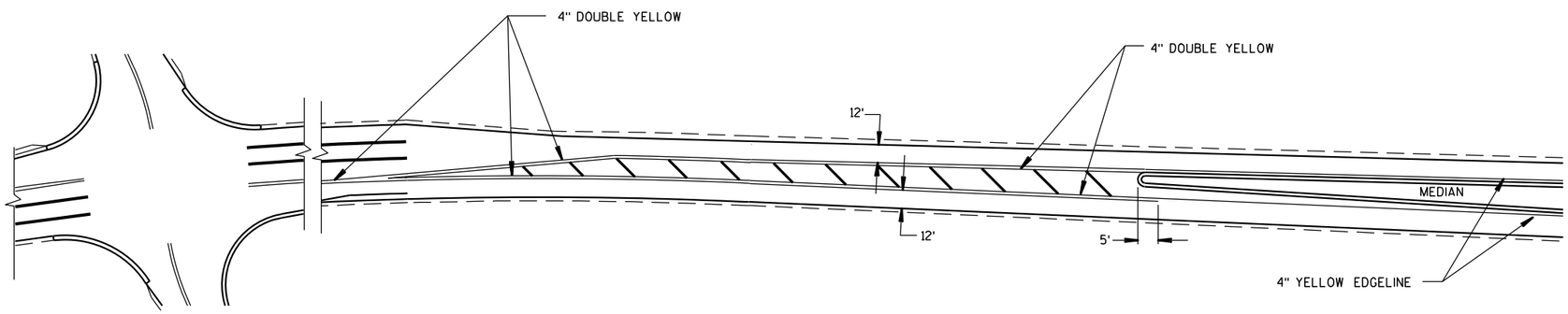

APPROACH MARKINGS FOR OTHER MEDIAN TYPES

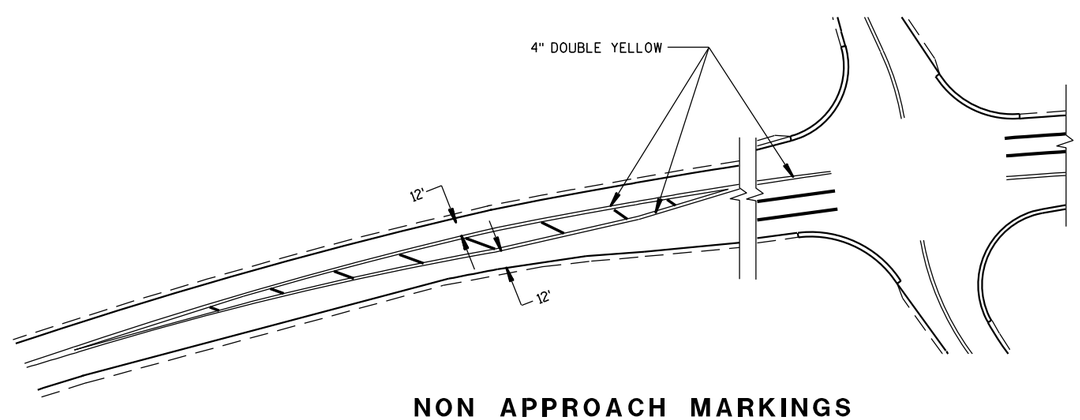

NON APPROACH MARKINGS

6

6

S.D.D. 15 C 18-3

S.D.D. 15 C 18-3

MEDIAN ISLAND MARKING

STATE OF WISCONSIN
DEPARTMENT OF TRANSPORTATION

APPROVED

2-5-09	/S/ Thomas N. Nothohm
DATE	STATE TRAFFIC ENGINEER

FHWA

IGN

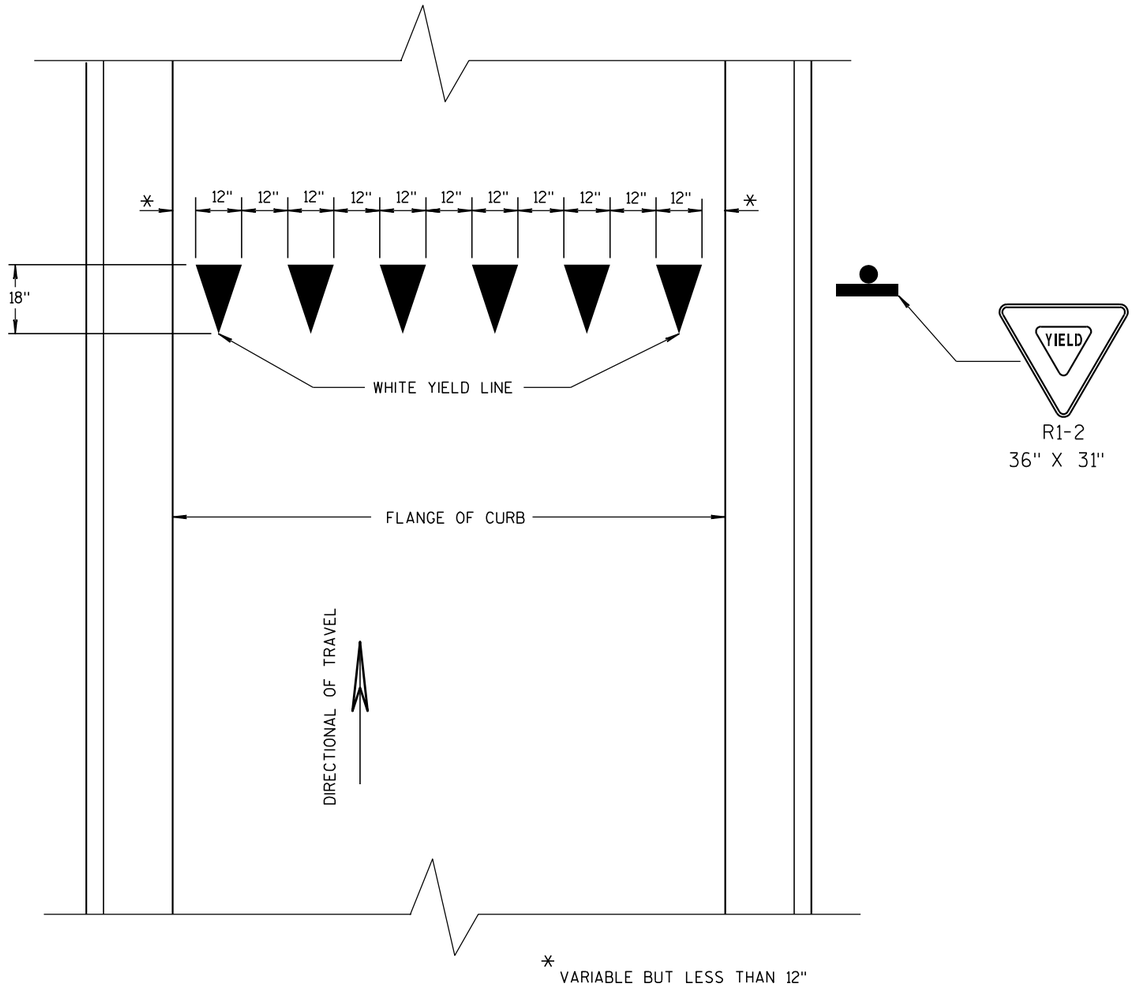

YIELD LINE

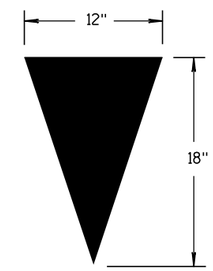

YIELD TRIANGLE

6

6

S.D.D. 15 C 20-1

S.D.D. 15 C 20-1

YIELD MARKINGS

STATE OF WISCONSIN
DEPARTMENT OF TRANSPORTATION

APPROVED

1/28/05 — DATE

/S/ Thomas N. Nothohm — STATE TRAFFIC ENGINEER

FHWA

GENERAL NOTE

APPLIES TO ISLANDS AT LEFT TURNS AT ONE WAY ROADWAYS AS WELL.

SEE MISCELLANEOUS QUANTITIES FOR SIGN SIZE.

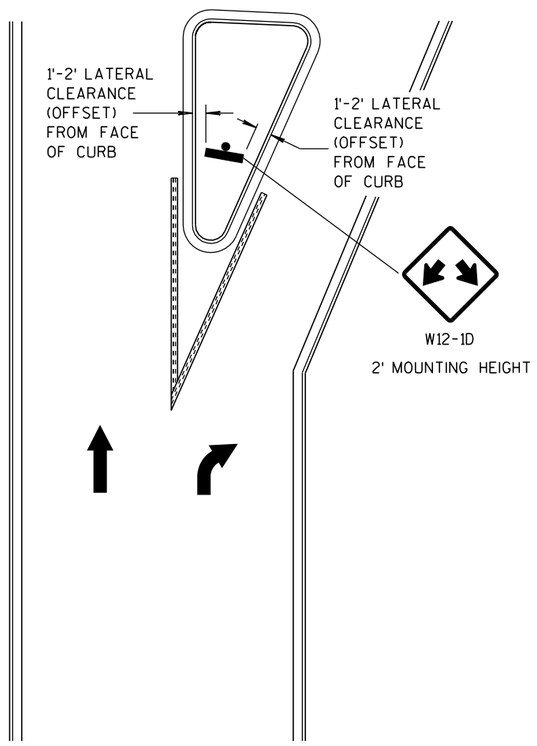

LARGE RIGHT TURN ISLAND

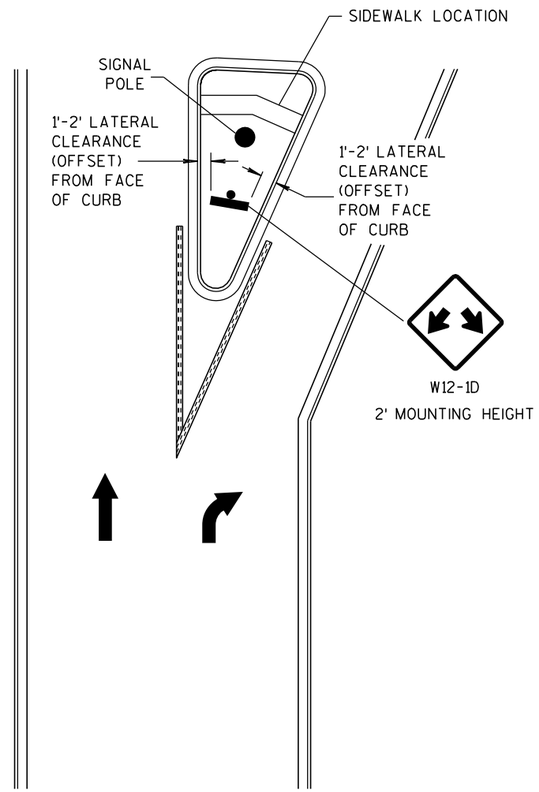

LARGE RIGHT TURN ISLAND
WITH SIGNAL POLE

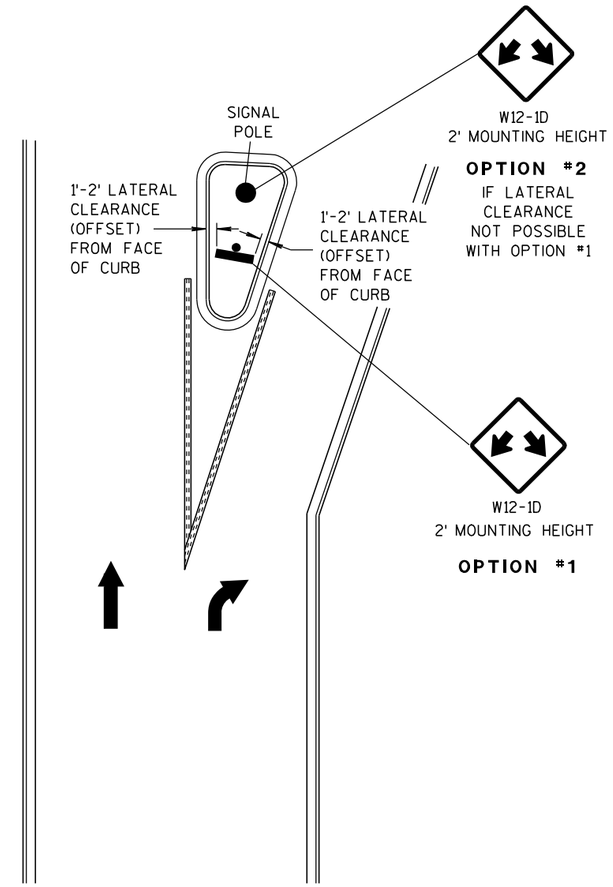

SMALL RIGHT TURN ISLAND

DOUBLE ARROW WARNING SIGN PLACEMENT

6

6

S.D.D. 15 C 27-1

S.D.D. 15 C 27-1

DOUBLE ARROW WARNING SIGN PLACEMENT	
STATE OF WISCONSIN DEPARTMENT OF TRANSPORTATION	
APPROVED	
10-22-08 DATE	/S/ Thomas N. Notbohm STATE TRAFFIC ENGINEER
FHWA	

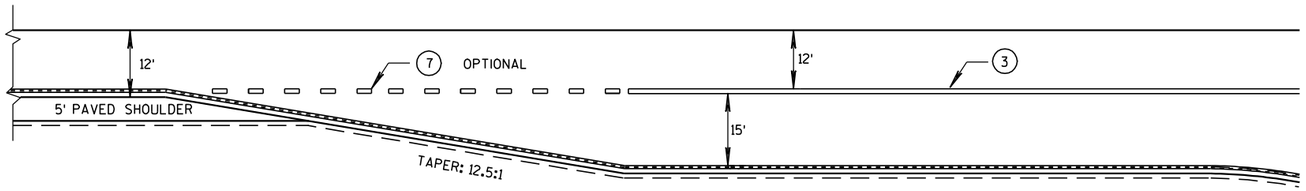

WIDER TURN LANE

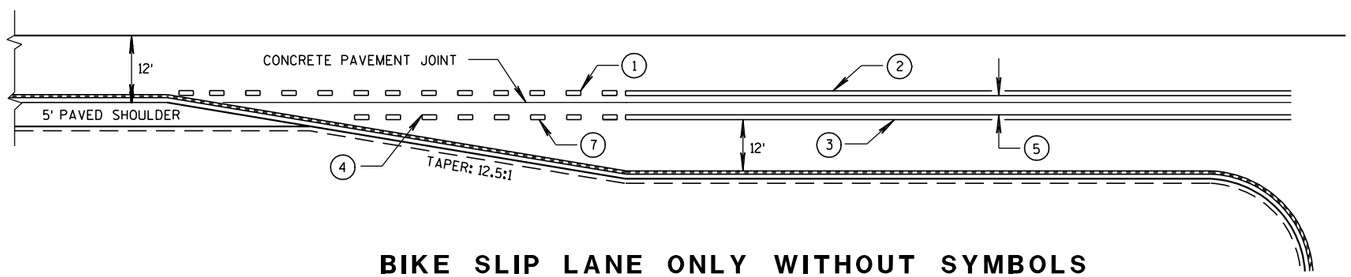

BIKE SLIP LANE ONLY WITHOUT SYMBOLS

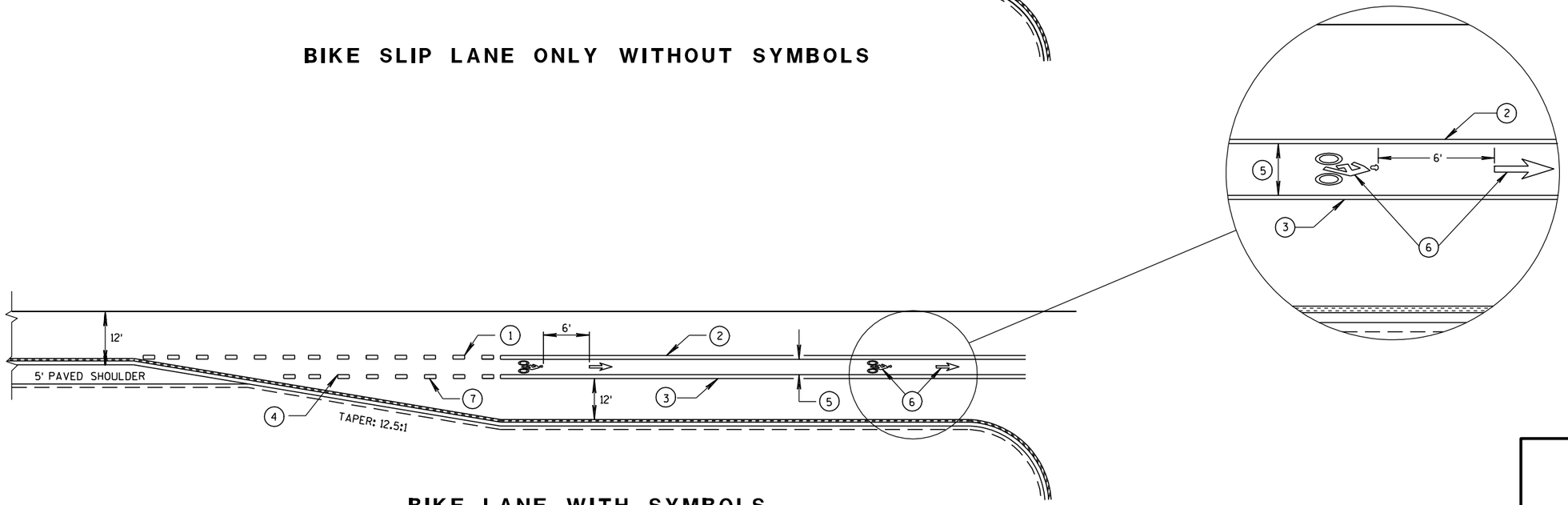

BIKE LANE WITH SYMBOLS

GENERAL NOTES

1. 3' LINE, 9' GAP - 4-INCH WIDE, WHITE.
2. 4-INCH, WHITE.
3. 8-INCH, WHITE.
4. IF SIGNED AND/OR MARKED AS A BICYCLE FACILITY INCLUDE SECOND LINE OF LINE-SPACE MARKING, OTHERWISE DO NOT.
5. BIKE ACCOMMODATION FOR CONCRETE PAVEMENT IS 5' WIDE.
   2 LANE (3' LEFT, 2' RIGHT OF JOINT).
   4 LANE (2' LEFT, 3' RIGHT OF JOINT).
   BIKE ACCOMMODATION FOR ASPHALT PAVEMENT IS A MINIMUM OF 4', 5' AT ≥45 MPH.
6. REQUIRED ONLY WHEN SPECIFIED IN THE CONTRACT.
7. 3' LINE, 9' GAP - 8-INCH WIDE, WHITE.

BICYCLE LANE MARKING	
STATE OF WISCONSIN DEPARTMENT OF TRANSPORTATION	
APPROVED 2/6/2012 DATE FHWA	/S/ Thomas N. N-[illegible] STATE TRAFFIC ENGINE 211 SIGN

6
S.D.D. 15 C 29-2a

GENERAL NOTES

1. 3' LINE, 9' GAP - 4-INCH WIDE, WHITE.
2. 4-INCH, WHITE.
3. 8-INCH, WHITE.
4. IF SIGNED AND/OR MARKED AS A BICYCLE FACILITY INCLUDE SECOND LINE OF LINE-SPACE MARKING, OTHERWISE DO NOT.
5. BIKE ACCOMMODATION FOR CONCRETE PAVEMENT IS 5' WIDE.
   2 LANE (3' LEFT, 2' RIGHT OF JOINT).
   4 LANE (2' LEFT, 3' RIGHT OF JOINT).
   BIKE ACCOMMODATION FOR ASPHALT PAVEMENT IS A MINIMUM OF 4', 5' AT ≥45 MPH.
6. REQUIRED ONLY WHEN SPECIFIED IN THE CONTRACT.
7. 3' LINE, 9' GAP - 8-INCH WIDE, WHITE.

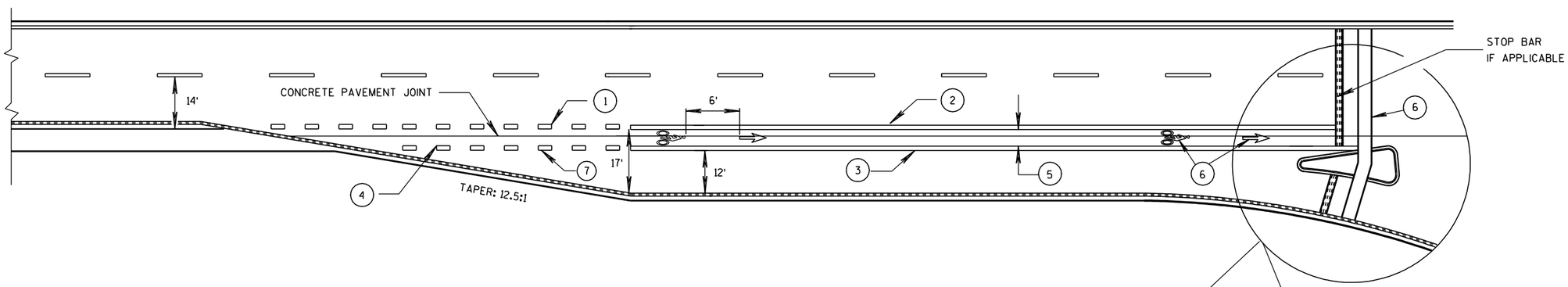

BIKE LANE - 4-LANE DIVIDED WITH RIGHT TURN LANE

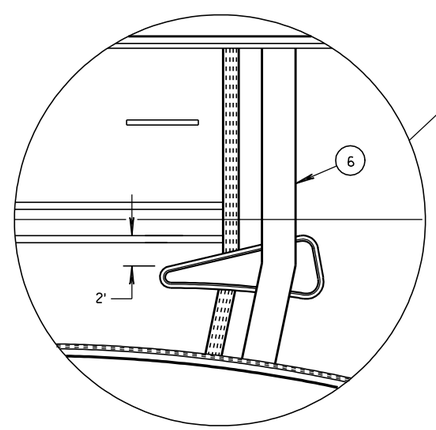

4 LANE DIVIDED WITH ISLAND

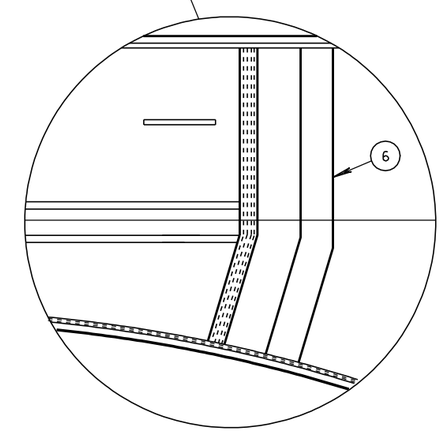

4 LANE DIVIDED WITHOUT ISLAND

BICYCLE LANE MARKING	
STATE OF WISCONSIN DEPARTMENT OF TRANSPORTATION	
APPROVED 2/6/2012 DATE	/S/ Thomas N. [illegible] STATE TRAFFIC ENGINEER SIGN
FHWA	

6

S.D.D. 15 C 29-2b

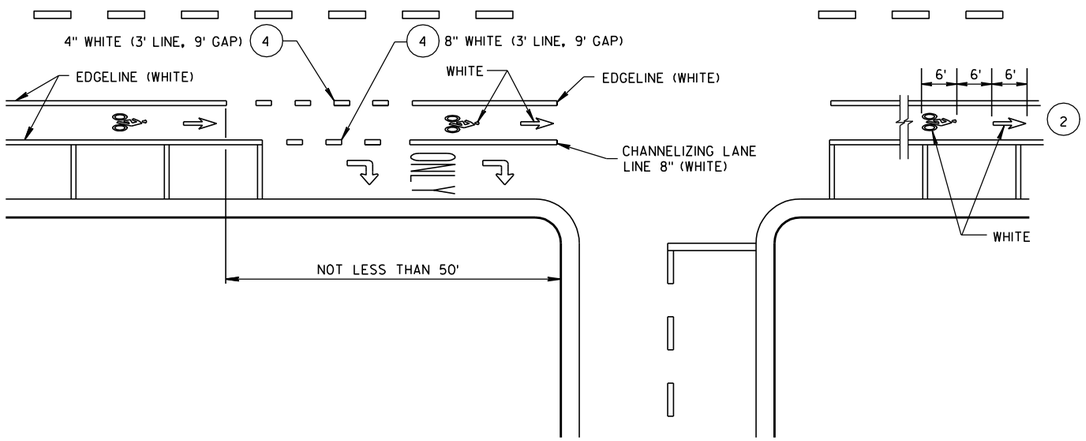

DESIGNATED BICYCLE LANE

GENERAL NOTES

1. DETAILS OF CONSTRUCTION NOT SHOWN ON THIS DRAWING SHALL CONFORM TO STANDARD SPECIFICATIONS AND SPECIAL PROVISIONS.
2. THE SERIES OF PAVEMENT MARKING SYMBOLS SHALL BE REPEATED AFTER INTERSECTIONS AND SPACED A MAXIMUM OF 250'. NO PAVEMENT MARKING WILL TAKE PLACE IN THE CROSSWALK.
3. DOTTED LINES SHOULD BE USED 50' TO 200' IN ADVANCE OF AN INTERSECTION WHERE THERE IS NO RIGHT TURN ONLY LANE AND THERE IS HEAVY RIGHT TURN TRAFFIC OR THERE IS A NEAR-SIDE BUS STOP. AT OTHER INTERSECTIONS WHERE RIGHT TURN TRAFFIC IS LIGHT TO MODERATE, A SOLID LINE CAN BE USED UP TO THE INTERSECTION.
4. WHEN SPECIFIED IN THE CONTRACT.

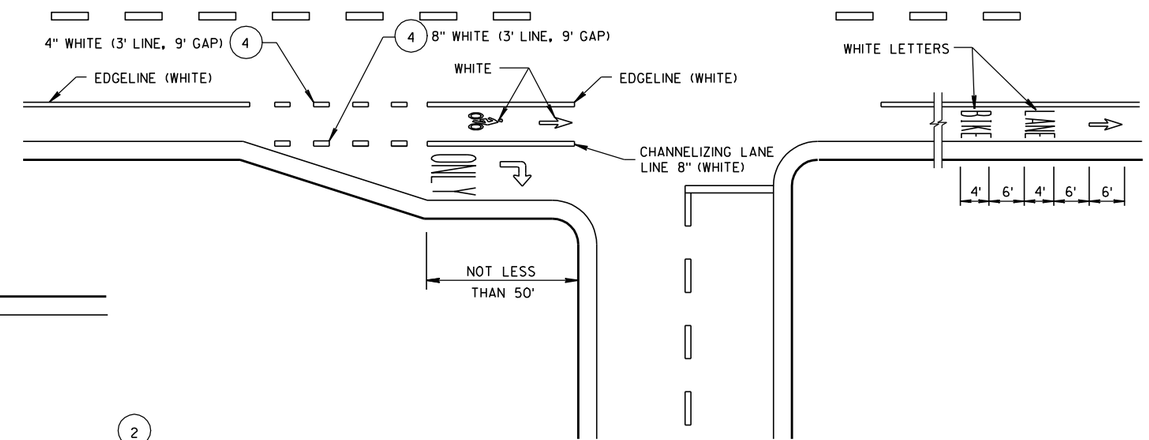

DESIGNATED BICYCLE LANE
NO PARKING, RIGHT TURN LANE

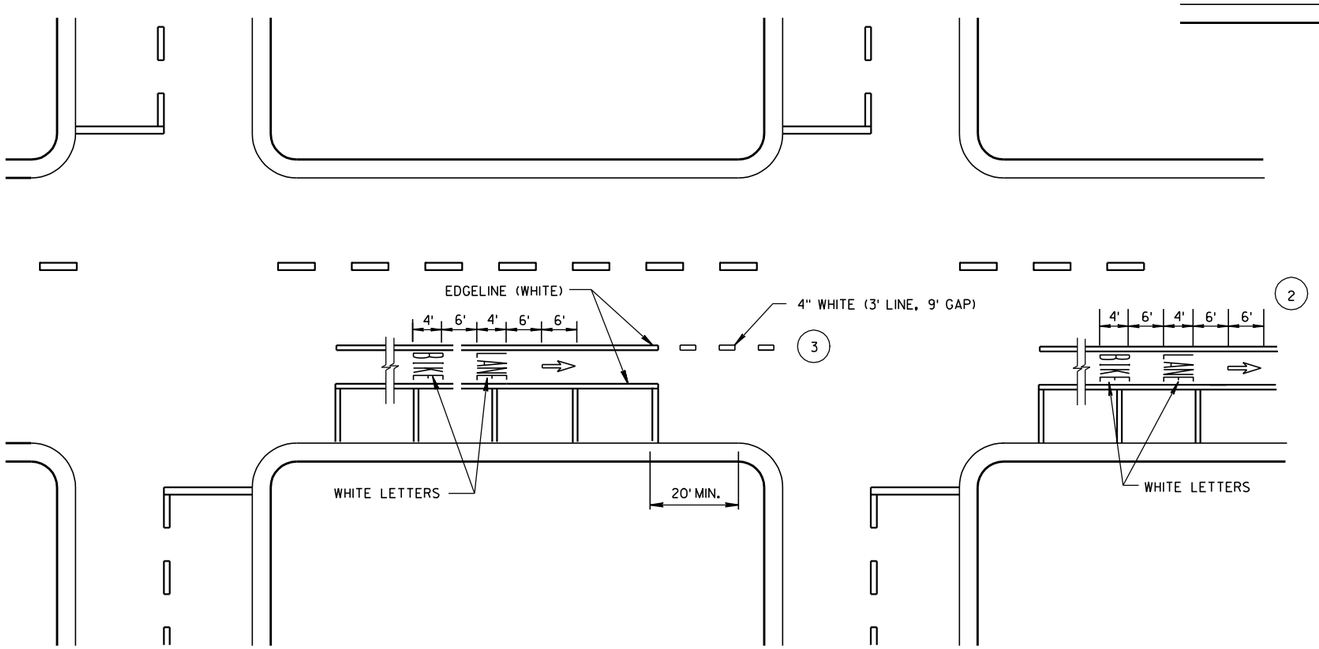

DESIGNATED BICYCLE LANE
WITH PARKING, NO RIGHT TURN LANE

URBAN BICYCLE LANE MARKING

STATE OF WISCONSIN
DEPARTMENT OF TRANSPORTATION

APPROVED
2/6/2012 — DATE
/S/ Thomas N. Nathan — STATE TRAFFIC ENGINEER
FHWA

6

S.D.D. 15 C 29-2c

GENERAL NOTES

1. DETAILS OF CONSTRUCTION NOT SHOWN ON THIS DRAWING SHALL CONFORM TO STANDARD SPECIFICATIONS AND SPECIAL PROVISIONS.
2. THE SERIES OF PAVEMENT MARKING SYMBOLS SHALL BE REPEATED AFTER INTERSECTIONS AND SPACED A MAXIMUM OF 250'. NO PAVEMENT MARKING WILL TAKE PLACE IN THE CROSSWALK.
3. DOTTED LINES SHOULD BE USED 50' TO 200' IN ADVANCE OF AN INTERSECTION WHERE THERE IS NO RIGHT TURN ONLY LANE AND THERE IS HEAVY RIGHT TURN TRAFFIC OR THERE IS A NEAR-SIDE BUS STOP. AT OTHER INTERSECTIONS WHERE RIGHT TURN TRAFFIC IS LIGHT TO MODERATE, A SOLID LINE CAN BE USED UP TO THE INTERSECTION.
4. 3' LINE, 9' GAP - 4" WIDE, WHITE.

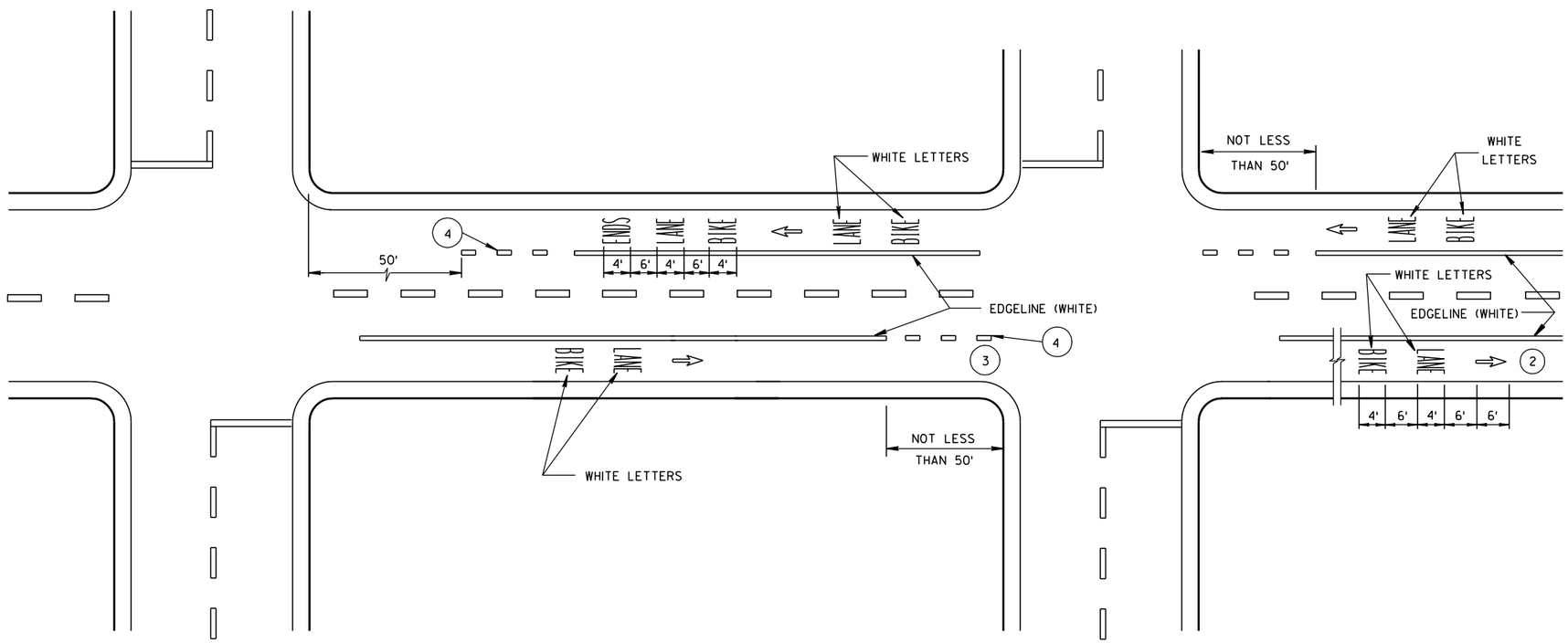

DESIGNATED BICYCLE LANE
NO PARKING

URBAN BICYCLE LANE MARKING

STATE OF WISCONSIN
DEPARTMENT OF TRANSPORTATION

APPROVED

2/6/2012 — DATE

/S/ Thomas N. N[illegible] — STATE TRAFFIC ENGINEER

FHWA

6

S.D.D. 15 C 29-2d

GENERAL NOTES

DETAILS OF INSTALLATION, MATERIALS AND WORKMANSHIP NOT SHOWN ON THIS DRAWING SHALL CONFORM TO THE PERTINENT REQUIREMENTS OF THE STANDARD SPECIFICATIONS AND APPLICABLE SPECIAL PROVISIONS.

ALL LETTERS, ARROWS AND SYMBOLS SHALL BE IN CONFORMANCE WITH REQUIREMENTS INCLUDED IN "STANDARD ALPHABETS FOR HIGHWAY SIGNS AND PAVEMENT MARKING" BOOK BY THE FEDERAL HIGHWAY ADMINISTRATION. ALL LETTERS, ARROWS AND SYMBOLS SHALL BE WHITE AND REFLECTORIZED. SMALL DIFFERENCES IN DIMENSIONS WITHIN THE TOLERANCES OF THAT BOOK ARE ACCEPTABLE.

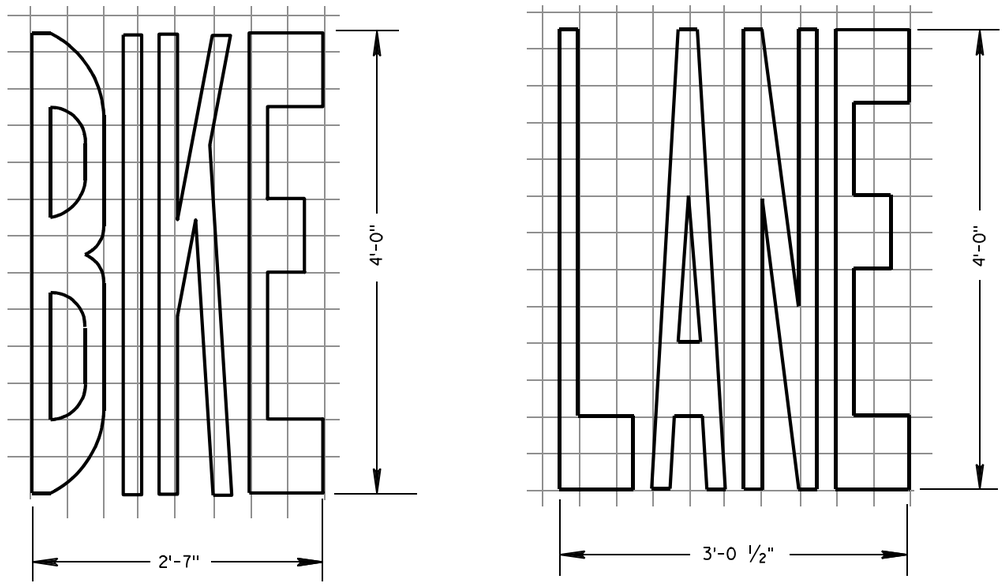

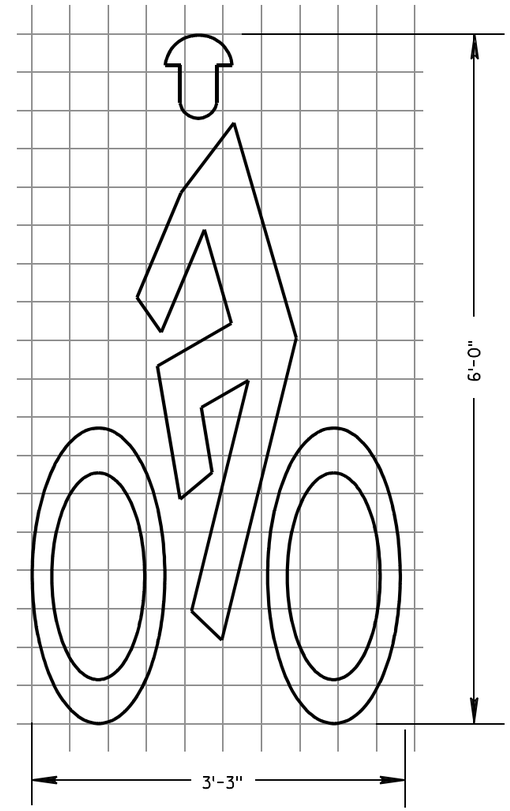

BIKE LANE SYMBOL

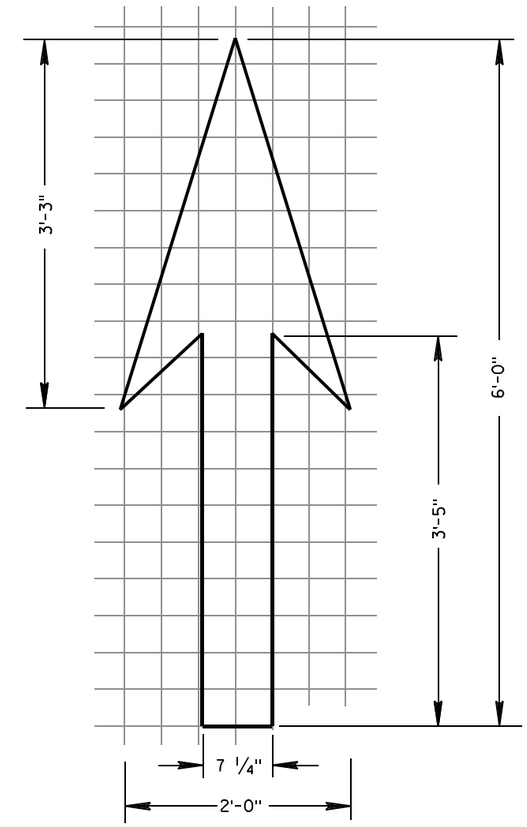

BIKE LANE ARROW

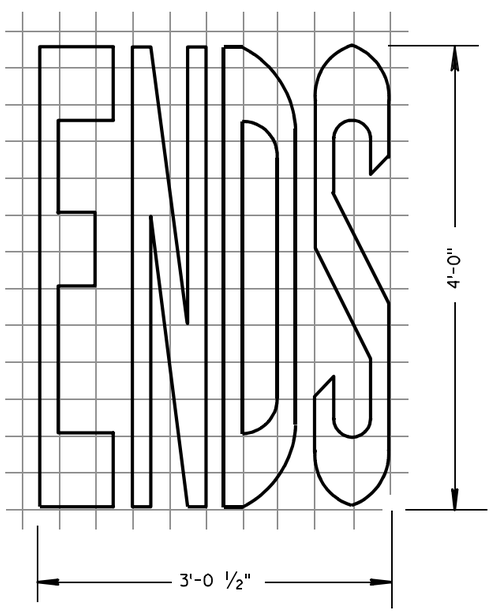

BIKE LANE WORDS

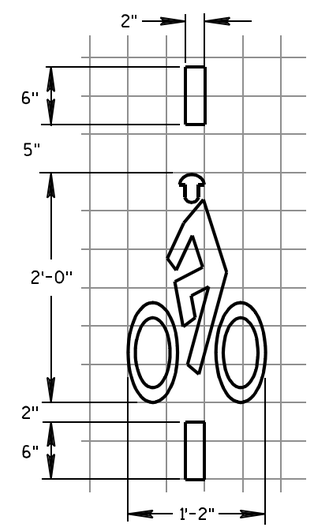

BICYCLE DETECTOR PAVEMENT MARKING

PAVEMENT MARKING FOR BIKE LANES
STATE OF WISCONSIN DEPARTMENT OF TRANSPORTATION
APPROVED 2-6-2012 DATE — /S/ Thomas N. N[illegible] STATE TRAFFIC ENGINEER — GN FHWA

6

6

S.D.D. 15 C 29-2e

S.D.D. 15 C 29-2e

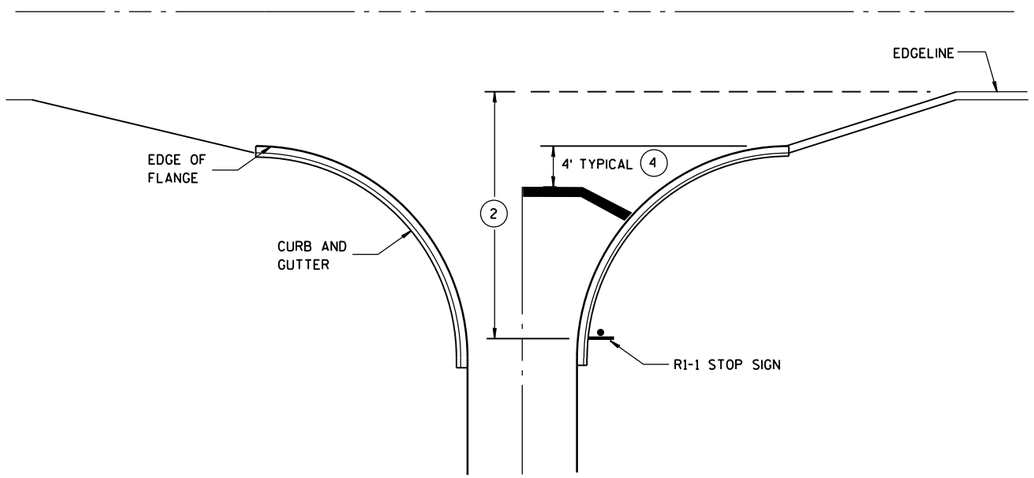

TYPICAL STOP LINE PAVEMENT MARKING WITH CURB AND GUTTER

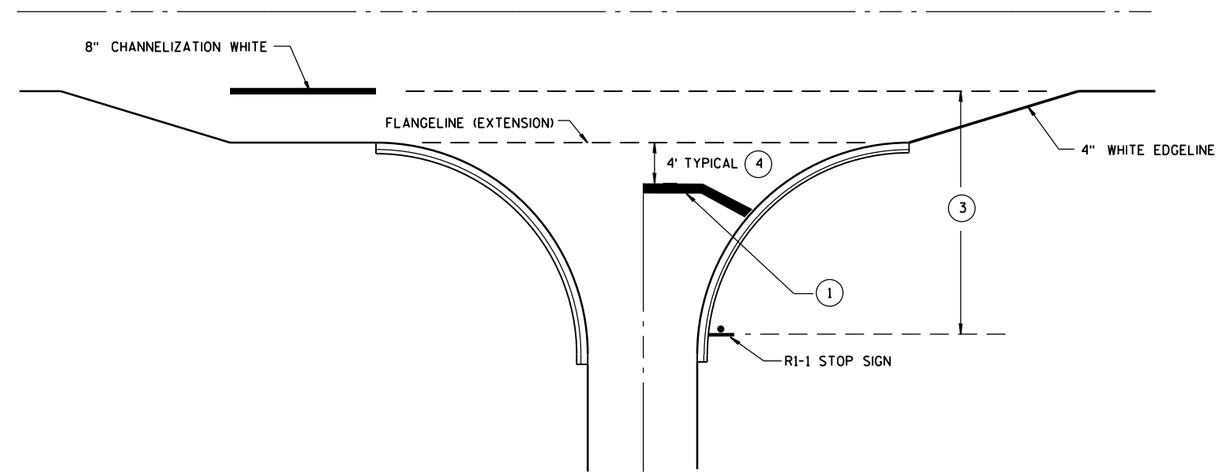

TYPICAL STOP LINE PAVEMENT MARKING FOR SIDEROADS WITH RIGHT TURN LANE

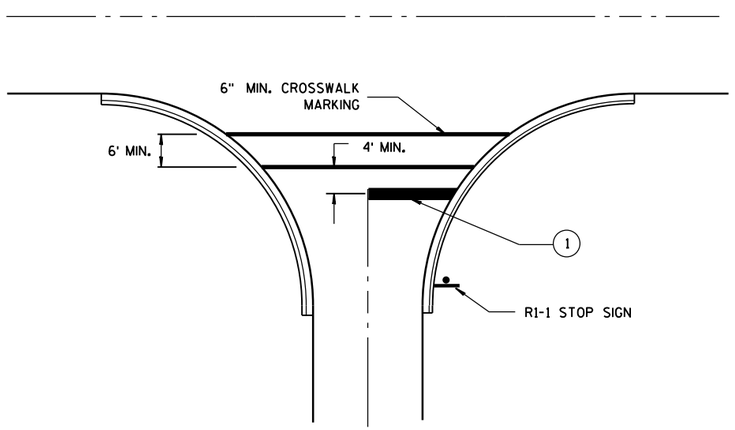

TYPICAL STOP LINE PAVEMENT MARKING FOR SIDEROADS WITH CROSSWALK MARKING

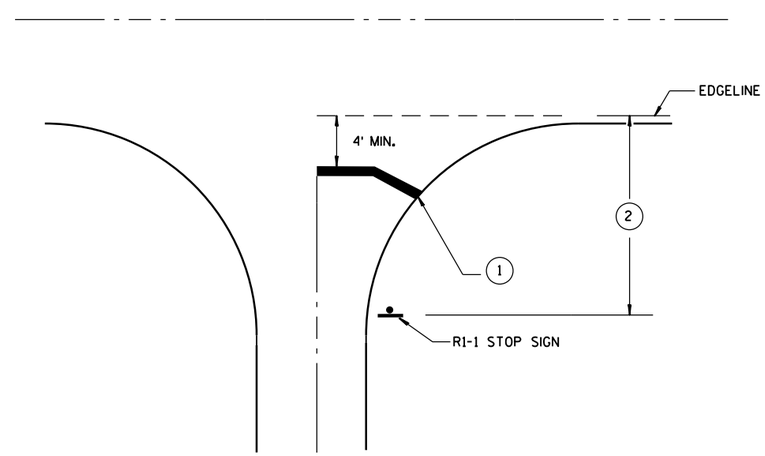

TYPICAL STOP LINE PAVEMENT MARKING WITHOUT CURB AND GUTTER

GENERAL NOTES

1. 18-INCH STOP LINES MAY BE DELETED OR ADDED BY THE PROJECT ENGINEER BASED ON VISIBILITY AND SIGHT LINES.
2. IF STOP SIGN IS LESS THAN OR EQUAL TO 40 FEET FROM THE EDGELINE THAN NO STOP LINE IS REQUIRED.
3. IF STOP SIGN IS LESS THAN OR EQUAL TO 30 FEET FROM THE FLANGELINE EXTENSION THAN NO STOP LINE IS REQUIRED.
4. MOVE CLOSER TO EDGE OF TRAVEL LANE AS NEEDED FOR VISIBILITY AND SIGHT LINES.

STOP LINE AND CROSSWALK PAVEMENT MARKING

STATE OF WISCONSIN
DEPARTMENT OF TRANSPORTATION

APPROVED
4/30/2013 — DATE
/S/ Travis Feltes — STATE TRAFFIC E
FHWA

6

S.D.D. 15 C 33-1

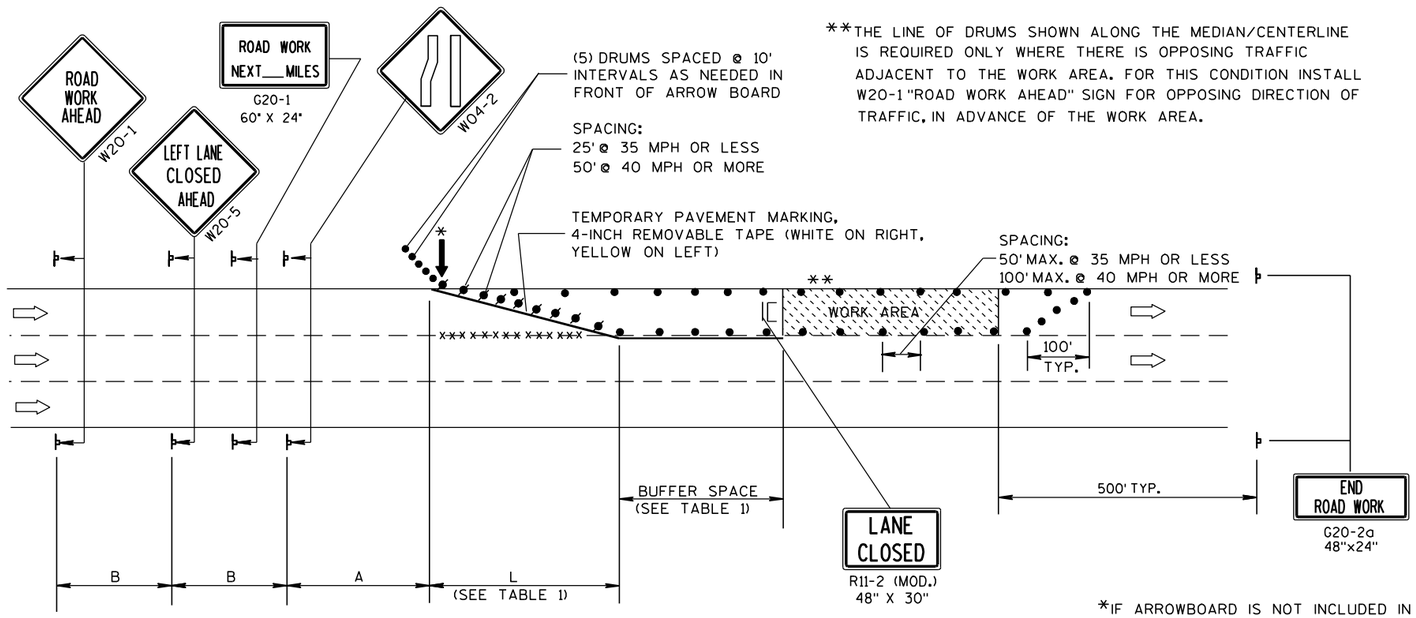

**THE LINE OF DRUMS SHOWN ALONG THE MEDIAN/CENTERLINE IS REQUIRED ONLY WHERE THERE IS OPPOSING TRAFFIC ADJACENT TO THE WORK AREA. FOR THIS CONDITION INSTALL W20-1 "ROAD WORK AHEAD" SIGN FOR OPPOSING DIRECTION OF TRAFFIC, IN ADVANCE OF THE WORK AREA.

B=400' AT 25-30 MPH
700' AT 35-40 MPH
1000' AT 45-55 MPH

A=200' AT 25-30 MPH
350' AT 35-40 MPH
500' AT 45-55 MPH

(PLACE BARRICADE AND SIGN APPROX. EVERY 1000' ACROSS THE CLOSED LANE)

*IF ARROWBOARD IS NOT INCLUDED IN MISCELLANEOUS QUANTITIES, SUBSTITUTE A TYPE III BARRICADE WITH W01-6 SIGN IN THE LANE CLOSURE TAPER.

W01-6
48"x24"

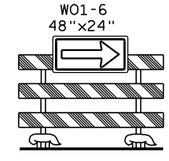

GENERAL NOTES

THIS LANE CLOSURE DETAIL IS TYPICAL FOR CLOSING THE LEFT LANE. FOR A RIGHT LANE CLOSURE, REVERSE THE TRAFFIC CONTROL.

THIS DETAIL MAY BE USED FOR ROADWAYS WITH EITHER TWO OR THREE LANES IN EACH DIRECTION.

THE EXACT NUMBER, LOCATION, AND SPACING OF ALL SIGNS AND DEVICES SHALL BE ADJUSTED TO FIT FIELD CONDITIONS AS APPROVED BY THE ENGINEER.

THE SPACING BETWEEN TRAFFIC CONTROL SIGNS SHOULD BE ADJUSTED TO NOT CONFLICT WITH AND SHOULD PROVIDE A DESIRABLE MINIMUM OF 200 FEET CLEARANCE TO EXISTING SIGNS THAT WILL REMAIN IN PLACE.

ALL SIGNS ARE 48"x48" UNLESS OTHERWISE NOTED. IF NECESSARY DUE TO SPACE CONSTRAINTS IN URBAN AREAS, 36" X 36" SIGNS MAY BE USED IF APPROVED BY DISTRICT TRAFFIC UNIT.

"WO" SIGNS ARE THE SAME AS "W" SIGNS EXCEPT THE BACKGROUND IS ORANGE.

SIGNS THAT WILL BE IN PLACE LESS THAN 7 CONTINUOUS DAYS AND NIGHTS, OR THAT WILL BE PLACED IN A CLOSED LANE, MAY BE MOUNTED ON PORTABLE SUPPORTS.

ANY SIGNS TEMPORARY OR EXISTING, WHICH CONFLICT WITH TRAFFIC CONTROL "IN USE" SHALL BE REMOVED OR COVERED AS NEEDED AND AS APPROVED BY THE ENGINEER.

REMOVE PAVEMENT MARKINGS AND PLACE TEMPORARY PAVEMENT MARKING, REMOVABLE TAPE IF LANE CLOSURE IS TO BE IN PLACE FOR 7 OR MORE CONTINUOUS DAYS AND NIGHTS.

ON UNDIVIDED ROADWAYS, OMIT THE SIGNS SHOWN ON LEFT SIDE OF ROAD.

W20-1, G20-1 AND G20-2A SIGNS ARE NOT REQUIRED IF THE LANE CLOSURE IS WITHIN A LARGER WORK ZONE WHERE THESE SIGNS ARE ALREADY PRESENT.

OMIT G20-1 SIGNS IF LENGTH OF WORK AREA IS 2 MILES OR LESS.

CONSIDER GEOMETRICS WHEN LOCATING SIGNS AND ARROWBOARDS SO THE APPROACHING DRIVER HAS A CLEAR VIEW OF THE ARROWBOARDS AND LANE CLOSURE DRUMS.

PLACE THE ARROWBOARD AS CLOSE AS POSSIBLE TO THE BEGINNING OF THE LANE CLOSURE TAPER, PREFERABLY ON THE SHOULDER OR TERRACE.

CHANNELIZING DEVICES PLACED ADJACENT TO WORK AREA SHALL BE PULLED BACK FROM THE TRAVEL LANE WHEN WORK IS NOT IN PROGRESS.

BARRICADES IN A CLOSED LANE THAT MUST BE MOVED FOR A WORK OPERATION SHALL BE IMMEDIATELY RE-ESTABLISHED UPON COMPLETION OF THE OPERATION OR, FOR CONTINUING OPERATIONS, AT THE END OF EACH WORKING DAY.

WARNING LIGHTS ARE NOT REQUIRED IF THE LANE CLOSURE IS A DAYTIME ONLY OPERATION.

TABLE 1
TAPER AND BUFFER SPACE FOR 12' LANE WIDTH

S	L	BUFFER SPACE
25	125'	55'
30	180'	85'
35	245'	120'
40	320'	170'
45	540'	220'
50	600'	280'
55	660'	335'

FOR LANE WIDTH OTHER THAN 12':

L = WS AT 45 MPH OR GREATER

$L = \frac{WS^2}{60}$ AT 40 MPH OR LESS

L = TAPER LENGTH IN FEET

S = NON-CONSTRUCTION SPEED LIMIT (MPH)

W = WIDTH OF LANE CLOSURE

LEGEND

DRUM WITH/WITHOUT WARNING LIGHT, TYPE C (STEADY-BURN)

POST MOUNTED SIGN

ARROW BOARD

TYPE III BARRICADE (8' EQUIVALENT) AND WARNING LIGHTS, TYPE A (FLASHING) WITH/WITHOUT SIGN

DIRECTION OF TRAFFIC FLOW

xxxx REMOVING PAVEMENT MARKING (SEE GENERAL NOTES)

TRAFFIC CONTROL, SINGLE LANE CLOSURE, NON-FREEWAY/EXPRESSWAY

STATE OF WISCONSIN
DEPARTMENT OF TRANSPORTATION

APPROVED

5/23/00 — DATE

/S/ Chester J. [illegible] — CHIEF SIGNS AND MAR[illegible] [illegible]INEER

FHWA

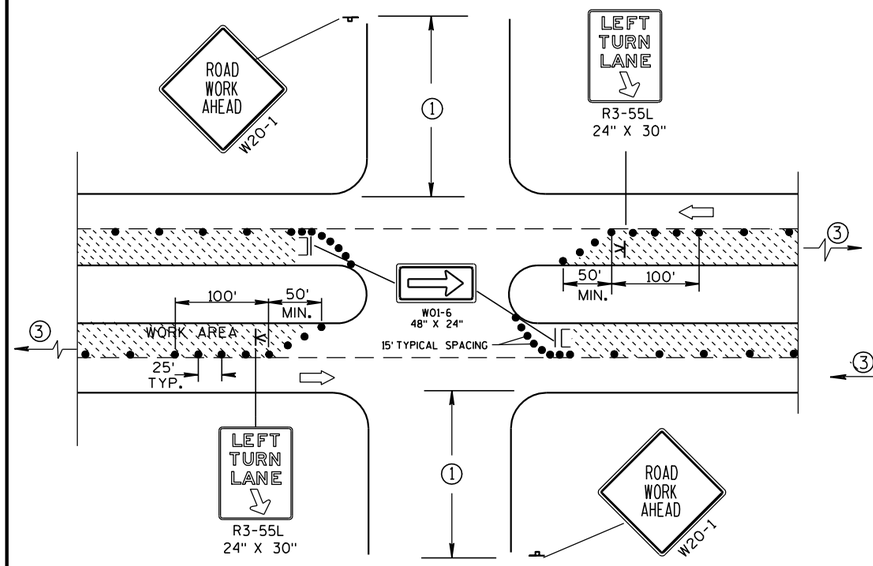

DETAIL A

FOR LEFT LANE CLOSURE AT INTERSECTION OR MEDIAN OPENING

PROVIDE TURN LANES AT INTERSECTIONS WHENEVER STAGING OF WORK ALLOWS. TAPER AND TURN LANE LENGTHS BASED ON FIELD CONDITIONS AS APPROVED BY THE ENGINEER.

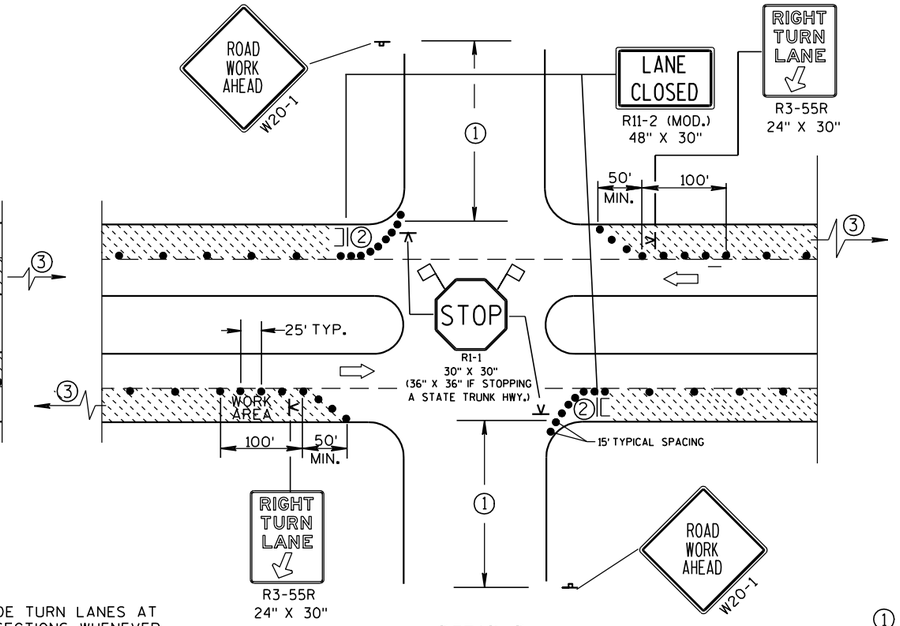

DETAIL B

FOR RIGHT LANE CLOSURE AT INTERSECTION

GENERAL NOTES

THE EXACT NUMBER, LOCATION, AND SPACING OF ALL SIGNS AND DEVICES SHALL BE ADJUSTED TO FIT FIELD CONDITIONS AS APPROVED BY THE ENGINEER.

THE SPACING BETWEEN SIGNS SHOULD BE ADJUSTED TO NOT CONFLICT WITH AND SHOULD PROVIDE A DESIRABLE MINIMUM OF 200 FEET CLEARANCE TO EXISTING SIGNS THAT WILL REMAIN IN PLACE.

ALL SIGNS ARE 48"×48" UNLESS OTHERWISE NOTED. IF NECESSARY DUE TO SPACE CONSTRAINTS IN URBAN AREAS, 36" X 36" SIGNS MAY BE USED IF APPROVED BY DISTRICT TRAFFIC UNIT.

"WO" SIGNS ARE THE SAME AS "W" SIGNS EXCEPT THE BACKGROUND IS ORANGE.

SIGN LAYOUTS SHALL BE IN ACCORDANCE WITH THE FHWA'S MANUAL OF STANDARD HIGHWAY SIGNS OR THE WISCONSIN STANDARD SIGN PLATES.

SIGNS THAT WILL BE IN PLACE LESS THAN 7 CONTINUOUS DAYS AND NIGHTS, OR THAT WILL BE PLACED IN A CLOSED LANE, MAY BE MOUNTED ON PORTABLE SUPPORTS.

ANY SIGNS TEMPORARY OR EXISTING, WHICH CONFLICT WITH TRAFFIC CONTROL "IN USE" SHALL BE REMOVED OR COVERED AS NEEDED AND AS APPROVED BY THE ENGINEER.

CHANNELIZING DEVICES PLACED ADJACENT TO WORK AREA SHALL BE PULLED BACK FROM THE TRAVEL LANE WHEN WORK IS NOT IN PROGRESS.

BARRICADES IN A CLOSED LANE THAT MUST BE MOVED FOR A WORK OPERATION SHALL BE IMMEDIATELY RE-ESTABLISHED UPON COMPLETION OF THE OPERATION OR, FOR CONTINUING OPERATIONS, AT THE END OF EACH WORKING DAY.

1. 500' TYPICAL OR AT LAST INTERSECTION, WHICHEVER IS CLOSER.
   350' IF 35-40 MPH.
   200' IF 25-30 MPH.
2. ALSO USE BARRICADE AND 15' TYPICAL DRUM SPACING AT COMMERCIAL DRIVEWAYS.
3. SEE SEPARATE LANE CLOSURE DETAIL FOR ADDITIONAL TRAFFIC CONTROL.

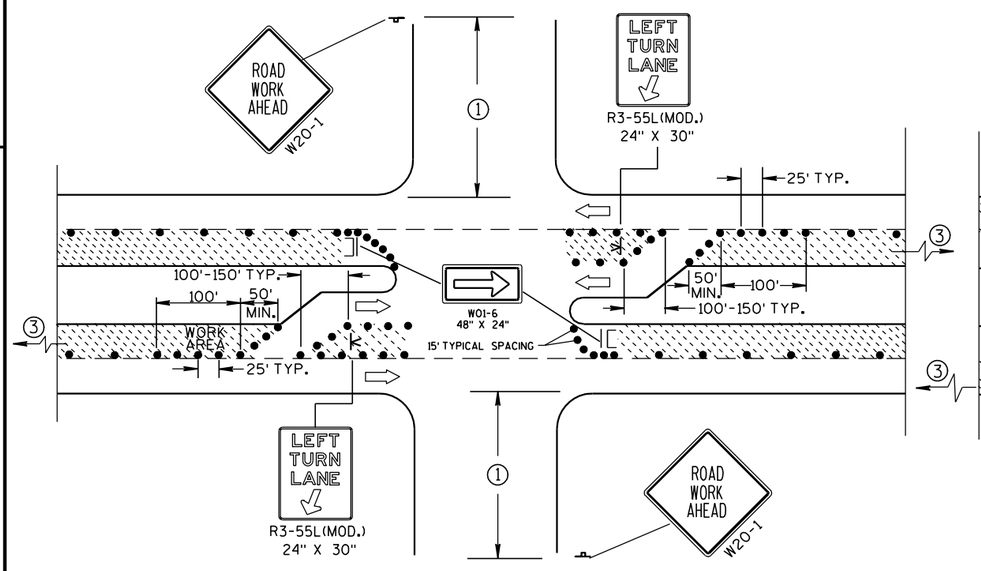

DETAIL C

FOR LEFT LANE CLOSURE AT INTERSECTION OR MEDIAN OPENING (WITH LEFT TURN BAY OPEN)

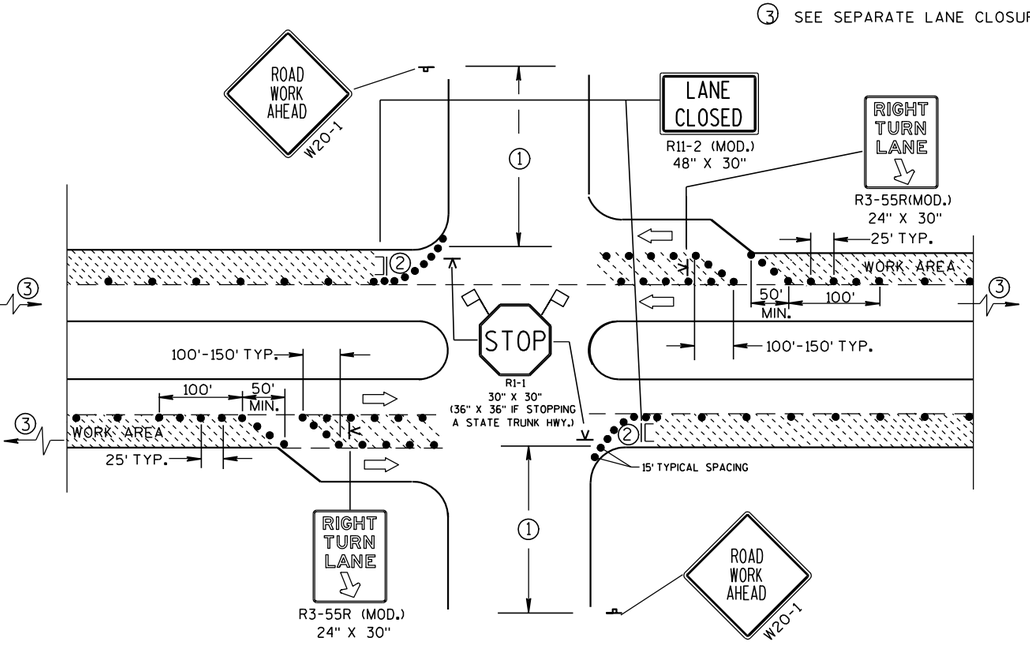

DETAIL D

FOR RIGHT LANE CLOSURE AT INTERSECTION (WITH RIGHT TURN BAY OPEN)

LEGEND

- DRUM
- POST MOUNTED SIGN
- SIGN ON PORTABLE SUPPORT (5' MIN. MOUNTING HEIGHT)
- TYPE III BARRICADE (8' EQUIVALENT) AND WARNING LIGHT, TYPE A (FLASHING) WITH SIGN
- DIRECTION OF TRAFFIC FLOW
- FLAGS, 16" X 16" MIN., ORANGE

TRAFFIC CONTROL, INTERSECTION WITHIN SINGLE LANE CLOSURE

STATE OF WISCONSIN
DEPARTMENT OF TRANSPORTATION

APPROVED
5/23/00 — DATE
/S/ Chester J. Spang — CHIEF SIGNS AND MARKINGS ENGINEER
FHWA

6

S.D.D. 15 D 21-1

WARNING OF LOCALIZED SIDEWALK WORK AREAS

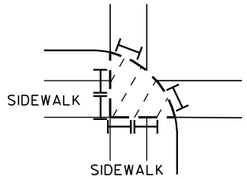

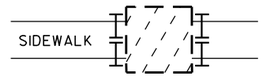

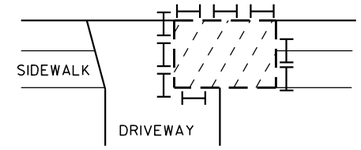

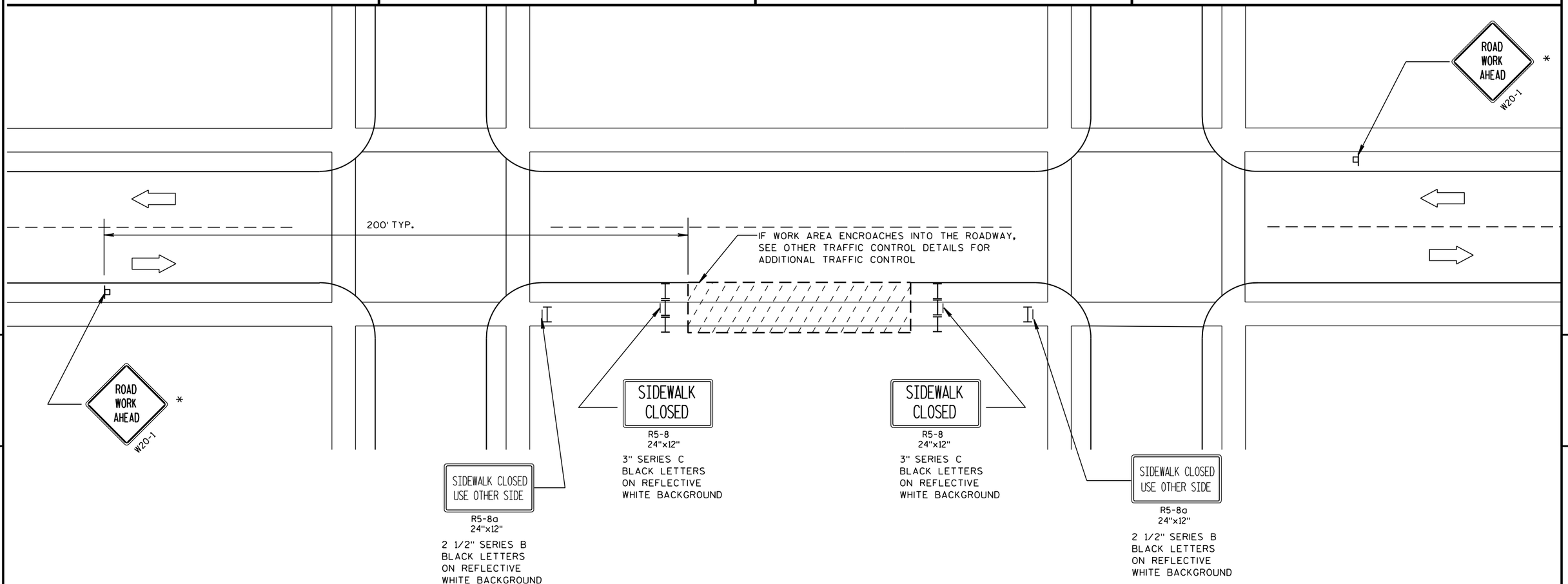

LEGEND

- POST MOUNTED SIGN
- TYPE II BARRICADE WITH/WITHOUT SIGN (ALL WITH ONE WARNING LIGHT, TYPE A, LOW-INTENSITY FLASHING)
- WORK AREA
- DIRECTION OF TRAFFIC FLOW

GENERAL NOTES :

ALL SIGNS ARE 48"x48" UNLESS OTHERWISE NOTED. IF NECESSARY DUE TO SPACE CONSTRAINTS, 36"x36" SIGNS MAY BE USED INSTEAD OF 48"x48" SIGNS, IF APPROVED BY DISTRICT TRAFFIC UNIT.

THE EXACT LOCATION AND PLACEMENT OF ALL SIGNS AND DEVICES SHALL BE ADJUSTED TO FIT FIELD CONDITIONS.

"WO" SIGNS ARE THE SAME AS "W" SIGNS EXCEPT THE BACKGROUND IS ORANGE.

* "ROAD WORK AHEAD" SIGNS ARE NOT REQUIRED IF THE SIDEWALK CLOSURE OCCURS WITHIN A LARGER WORK ZONE WHERE ADVANCE WARNING SIGNS ARE ALREADY PRESENT, OR IF THE WORK AREA AND EQUIPMENT ARE MORE THAN 2 FEET BEHIND THE CURB.

WARNING SIGNS THAT WILL BE IN PLACE LESS THAN 7 CONTINUOUS DAYS AND NIGHTS MAY BE MOUNTED ON PORTABLE SUPPORTS.

TRAFFIC CONTROL, SIDEWALK CLOSURE

TRAFFIC CONTROL, SIDEWALK CLOSURE

STATE OF WISCONSIN
DEPARTMENT OF TRANSPORTATION

APPROVED
5/23/2000 /S/ Chester J. [illegible]
DATE CHIEF SIGNS AND MARK[illegible]NEER
FHWA

6

S.D.D. 15 D 30-1

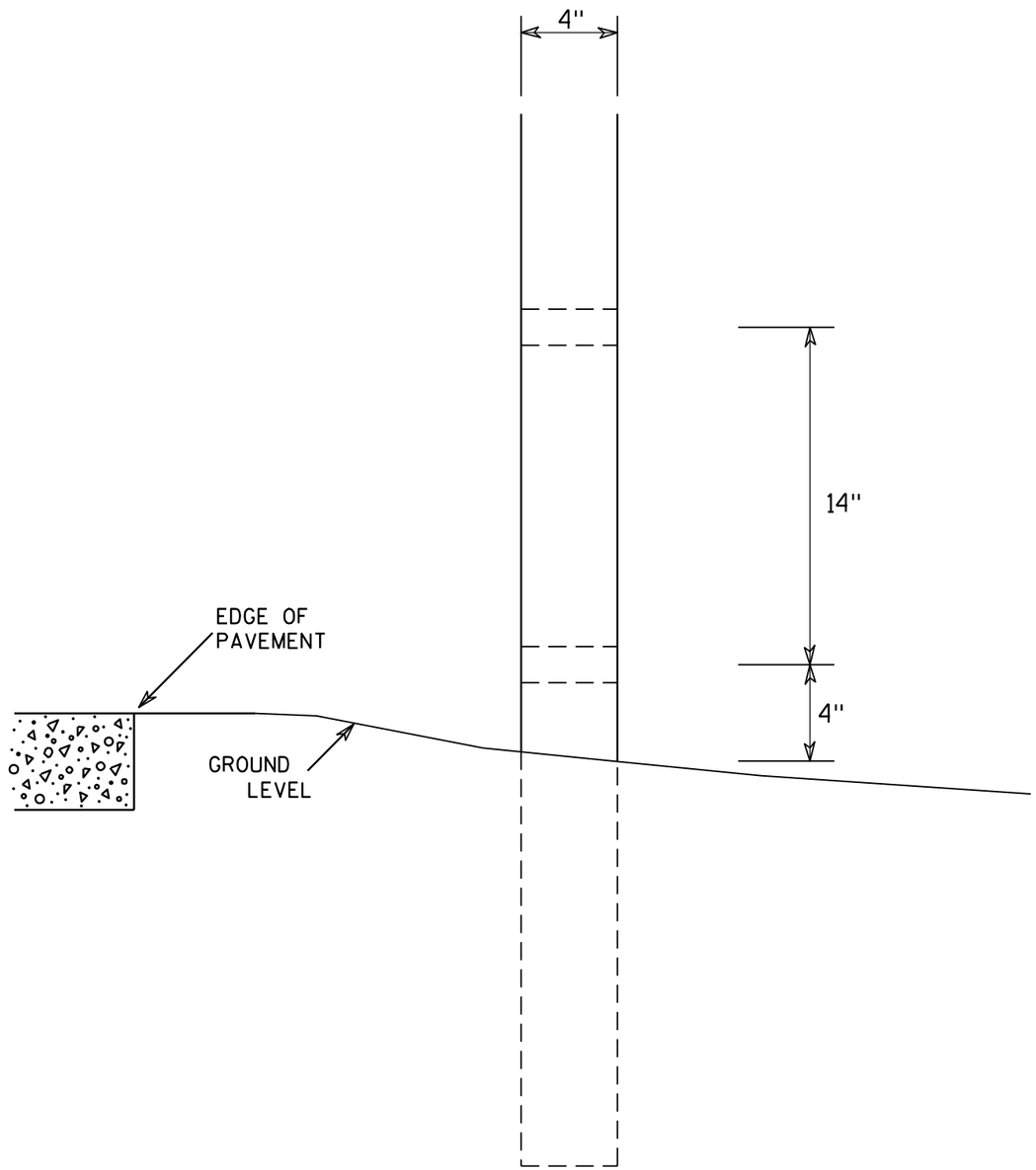

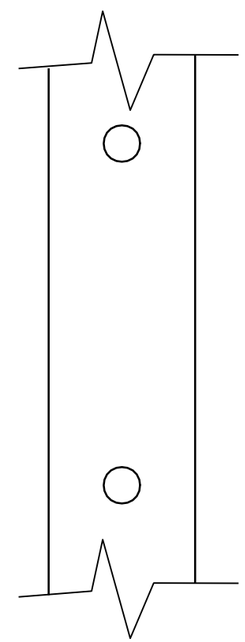

SIDE VIEW

GENERAL NOTES

1. All 4 x 6 Wood Posts shall be modified by having two 1½" diameter holes drilled perpendicular to the roadway centerline.

7

7

4 X 6 WOOD POST MODIFICATIONS

WISCONSIN DEPT OF TRANSPORTATION

APPROVED Chester J Spang for State Traffic Engineer

DATE 3/27/97 PLATE NO. A4-11.2

PROJECT NO:	HWY:	COUNTY:		SHEET NO: 220	E

URBAN AREA

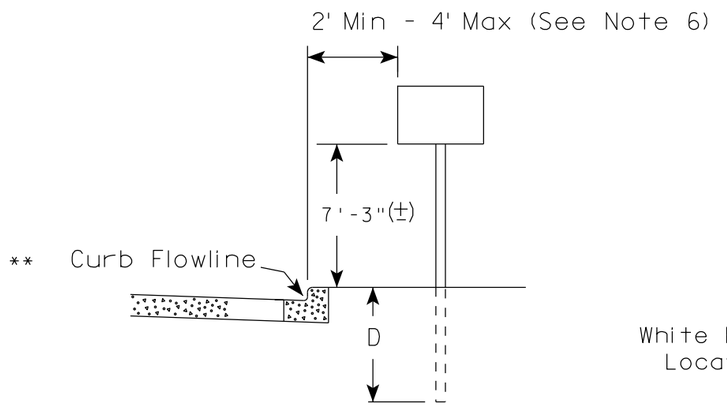

RURAL AREA (See Note 2)

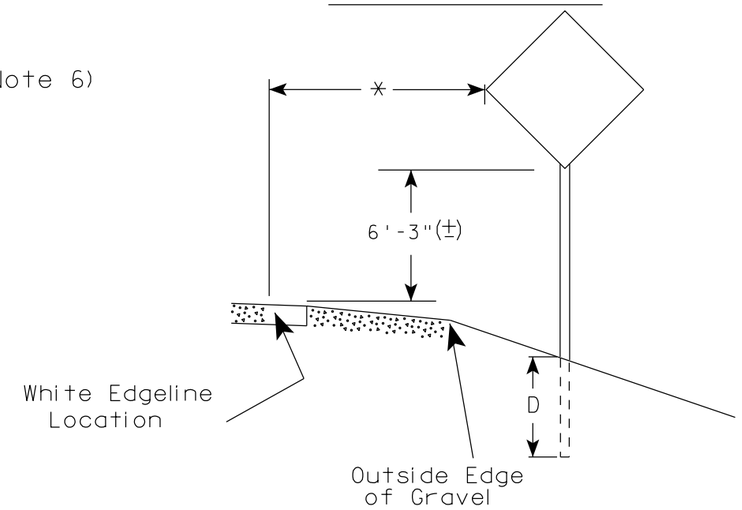

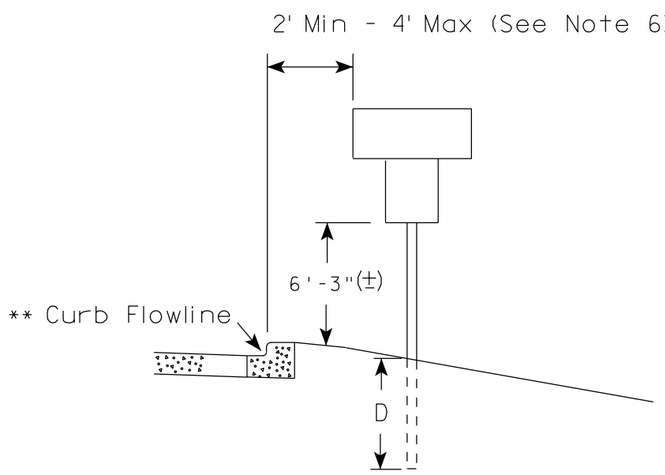

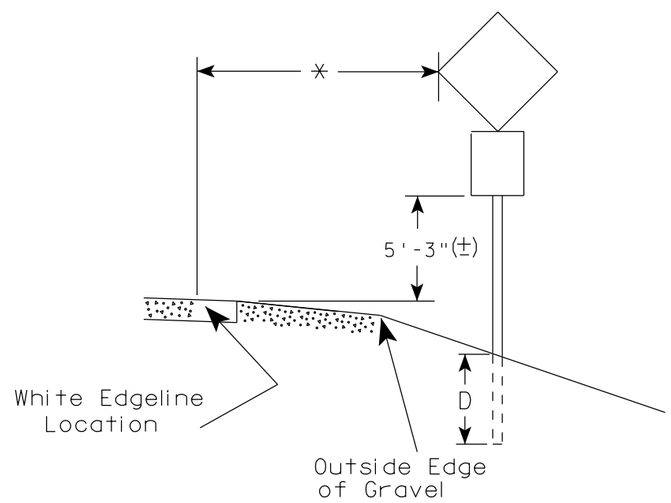

** The existence of curb and gutter does not in itself mandate the vertical clearance illustrated. That height is typically measured where there is sidewalk adjacent to the roadway or parking is permitted. In the absence of sidewalk vertical clearance is measured from the top of the curb. Offset of signs is measured from the flow line.

* 6 feet from edge of a paved shoulder or 12 feet from the edge of pavement (edge line location) or 2 feet from outside edge of gravel, whichever is greater unless directed by project engineer.

GENERAL NOTES

1. Signs wider than 4 feet, 20 sq.ft or larger, shall be mounted on multiple posts. Refer to plate A4-4.
2. If signs are mounted on barrier wall, see A4-10 sign plate.
3. For expressways and freeways, mounting height is 7'- 3" (±) or 6'-3" (±) depending upon existence of a sub-sign.
4. Minimum mounting height for J assemblies (A4-5) is 7'-3" (±) or 6'-3" (±) per urban or rural detail respectively.
5. Minimum mounting height for signs mounted on traffic signal poles is 5'- 3" (±).
6. Offset distance shall be consistent with existing signs or consistent throughout length of project.
7. The (±) tolerance for mounting height is 3 inches.
8. Folding stop signs (R1-1F) shall be mounted at a height of 5'-3" (±) or as directed by the Engineer.
9. The Double Arrow sign (W12-1) shall be mounted at a height of 2'-3" (±). The Chevron sign (W1-8), Roundabout Chevron panel (R6-4B), Enhanced Reference Markers, Clearance Markers (W5-52), Mile Markers (D10 series) & End of Rod Markers (W5-56 & W5-56A) shall be mounted at a height of 4'-3" (+).

POST EMBEDMENT DEPTH

Area of Sign Installation (Sq. Ft.)	D (Min)
20 or Less	4'
Greater than 20	5'

TYPICAL INSTALLATION OF PERMANENT TYPE II SIGNS ON SINGLE POSTS

WISCONSIN DEPT OF TRANSPORTATION

APPROVED Matthew R Rauch for State Traffic Engineer

DATE 9/30/13 PLATE NO. A4-3.18

PROJECT NO:	HWY:	COUNTY:		SHEET NO:	E

URBAN AREA

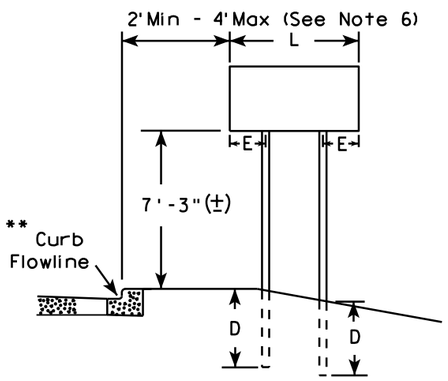

RURAL AREA (See Note 3)

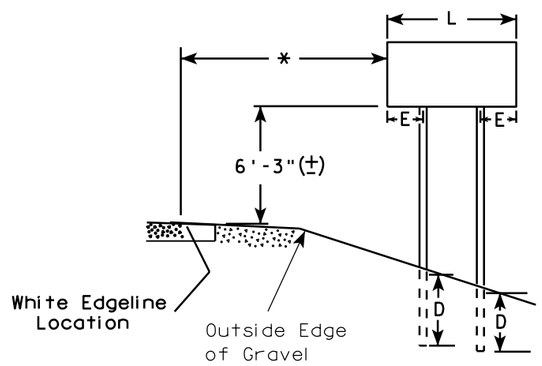

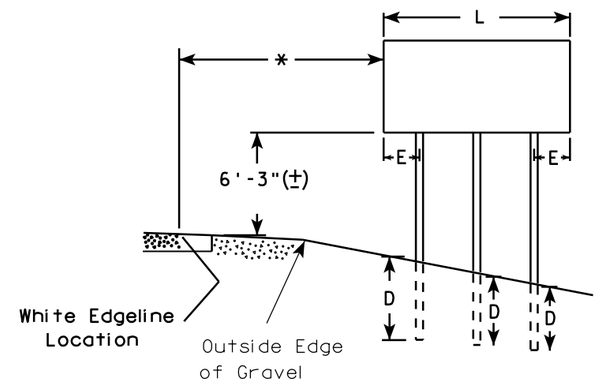

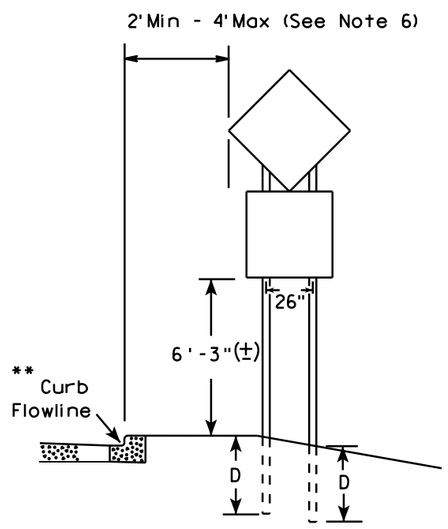

48" DIAMOND WARNING SIGN

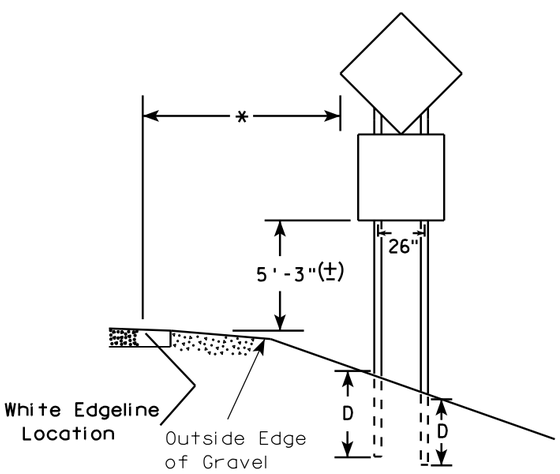

48" DIAMOND WARNING SIGN

GENERAL NOTES

1. For 3 or 4 post installations, individual post spacing shall be greater than 3'-6".
2. See tables below for required number of posts.
3. For expressways and freeways, mounting height is 7'-3" (±) or 6'-3" (±) depending upon existence of sub-sign.
4. The (±) tolerance for mounting height is 3 inches.
5. Minimum mounting height for J assemblies (A4-5) is 7'-3" (±) or 6'-3" (±) per urban or rural detail respectively.
6. Offset distance shall be consistent with existing signs or consistent throughout length of project.
7. Folding stop signs (R1-1F) shall be mounted at a height of 5'-3" (±) or as directed by the engineer.
8. The Double Arrow sign (W12-1) shall be mounted at a height of 2'-3" (±). The Chevron sign (W1-8), Roundabout Chevron panel (R6-4B), Clearance Markers (W5-52), Mile Markers (D10 series) & End of Road Markers (W5-56 & W5-56A) shall be mounted at a height of 4"-3" (±).

* 6 feet from edge of a paved shoulder or 12 feet from the edge of pavement (edge line location) or 2 feet from outside edge of gravel, whichever is greater unless directed by project engineer.

** The existence of curb and gutter does not in itself mandate the vertical clearance illustrated. That height is typically measured where there is sidewalk adjacent to the roadway or parking is permitted. In the absence of sidewalk vertical clearance is measured from the top of the curb. Offset of signs is measured from the flow line.

*** See A4-3 sign plate for signs 4' or less in width or 20 S.F. or less in area.

SIGN SHAPE OTHER THAN DIAMOND (TWO POSTS REQUIRED)	
L	E
*** Greater than 48" Less than 60"	12"
60" to 120"	L/5

SIGN SHAPE OTHER THAN DIAMOND (THREE POSTS REQUIRED)	
L	E
Greater than 120" less than 168"	12"

SIGN SHAPE OTHER THAN DIAMOND (FOUR POSTS REQUIRED)	
L	E
168" and greater	12"

POST EMBEDMENT DEPTH

Area of Sign Installation (Sq. Ft.)	D (Min)
20 or Less	4'
Greater than 20	5'

TYPICAL INSTALLATION OF TYPE II SIGNS ON MULTIPLE POSTS

WISCONSIN DEPT OF TRANSPORTATION

APPROVED Matthew R Rauch
for State Traffic Engineer

DATE 9/30/13 PLATE NO. A4-4 12 222

PROJECT NO:	HWY:	COUNTY:		SHEET NO:	E

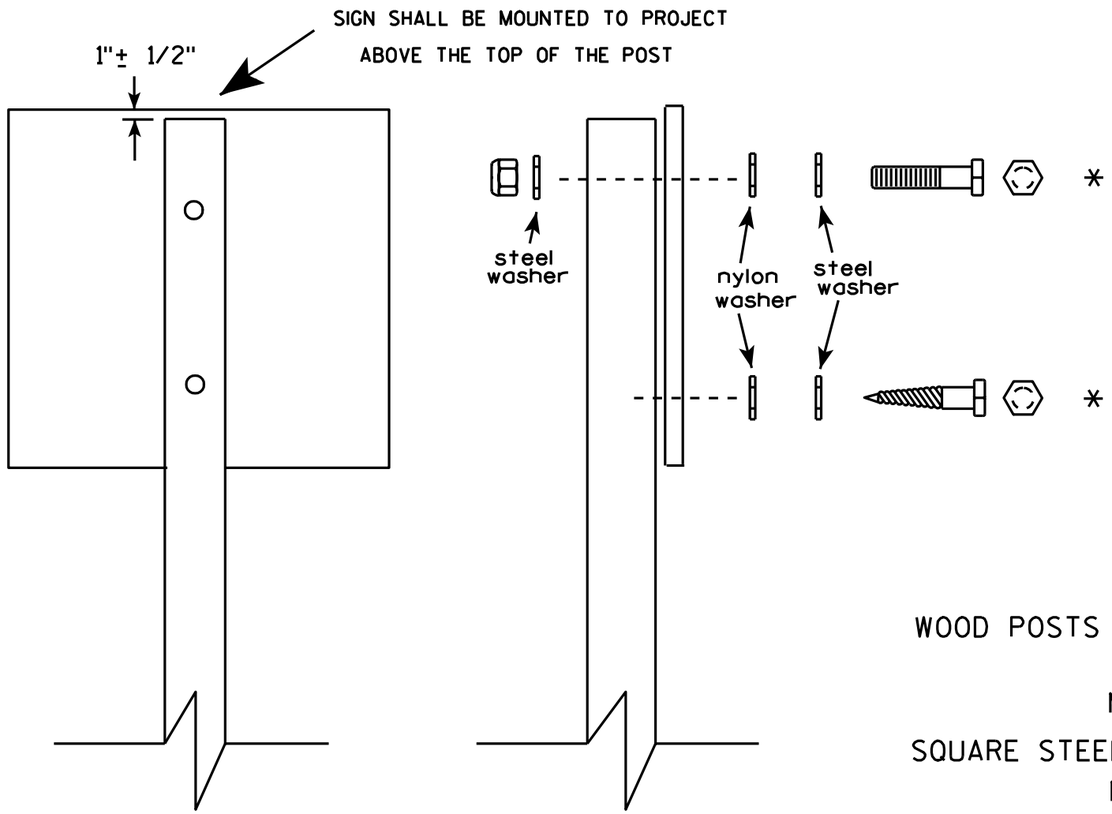

Nuts, bolts and lags used for mounting signs shall have hexagonal heads and shall be either :

a. Hot dip galvanized in accordance with ASTM Designation: A 153, Class D, or SC 3

b. Electro-galvanized in accordance with ASTM Designation : B 633, TYPE III, SC 3.

Threads on bolts and nuts shall be manufactured with sufficient allowance for the cadmium plate or galvanized coating to permit the nuts to run freely on the bolts.

WOOD POSTS (4" x 4" or 4" x 6")

LAG SCREWS - 3/8" X 3"

MACHINE BOLTS - 5/16" X 6-1/2" or 7" Length w/ nuts

SQUARE STEEL POSTS (2" x 2")

MACHINE BOLTS - 3/8" X 3-1/4" Length w/ nuts

RIVETS - 9/32 " (6605-9-6) BULB-TITE, TRI-FOLD, ALUMINUM BODY/MANDREL O.D. FLANGE .720-.765 INCH, GRIP RANGE .042-.375 INCH

WASHERS (ALL POSTS) -

1-1/4" O.D. X 3/8" I.D. X 1/16" STEEL

1-1/4" O.D. X 3/8" I.D. X .080 NYLON for all Type H signs.

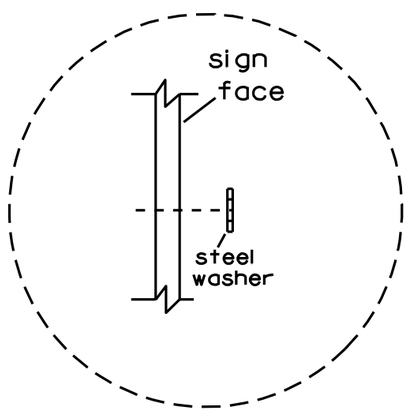

Washer Placement when Sign Has Other Than Type H or Type F Face

* Two different fastening systems are shown for illustration purposes. On any individual sign, either one or the other system shall be used. Actual number of fasteners per sign varies with the sign area, but normally there are two. For a single post installation, all signs greater than 9 sq. ft. require the use of 3 fasteners.

ATTACHMENT OF SIGNS TO POSTS

WISCONSIN DEPT OF TRANSPORTATION

APPROVED Matthew R Rauch
for State Traffic Engineer

DATE 3/23/10 PLATE NO. A4-8.7

7

7

PROJECT NO:

SHEET NO: 223 E

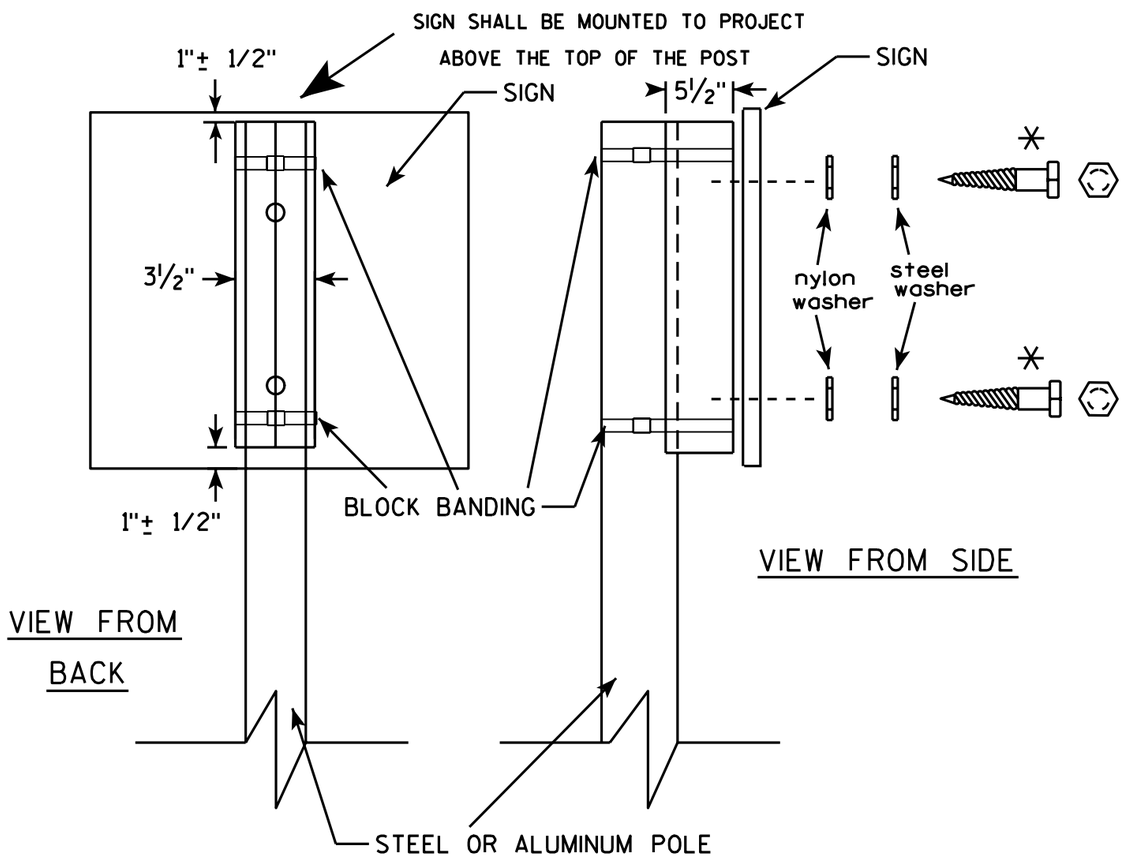

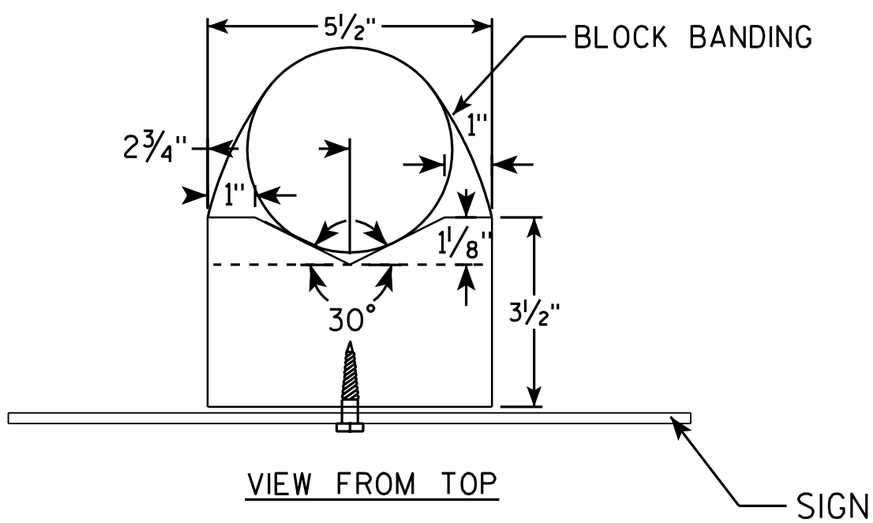

GENERAL NOTES

1. WOOD 4"X6" POST MATERIAL SHALL CONFORM TO 507.2.2 OF THE WisDOT STANDARD SPECIFICATIONS
2. BLOCK BANDING AND CLIPS SHALL BE STAINLESS STEEL, ¾" WIDTH AND 0.025" THICKNESS
3. SIGNS 3' OR GREATER IN HEIGHT SHALL UTILIZE 3 BLOCK BANDS. SIGNS UNDER 3' IN HEIGHT SHALL UTILIZE 2 BLOCK BANDS
4. ACTUAL NUMBER OF FASTENERS PER SIGN VARIES WITH THE SIGN AREA, BUT NORNALLY THERE ARE TWO. FOR SIGNS GREATER THAN 9 S.F. 3 FASTENERS SHALL BE USED.
5. ALL SIGN MOUNTING BOLTS AND WASHERS SHALL BE EITHER:
   a. Hot dip or mechanically galvanized in accordance with ASTM Designation: A 153, Class D, or
   b. Cadmium plated in accordance with ASTM Designation : B 766 TYPE 3, Class 12, or
   c. Electro-galvanized in accordance with ASTM Designation : B 633, TYPE III, SC 3.
6. ALL BOLTS SHALL HAVE HEXAGONAL HEADS.
7. STEEL WASHERS SHALL BE 1¼" O.D. X ⅜" I.D. X 1/16"
8. NYLON WASHERS SHALL BE 1¼" O.D. X ⅜" I.D. X .080 FOR TYPE H OR TYPE F FACE SIGN

✳ LAG BOLTS SHALL BE ⅜" X 2½"

BLOCK BANDING DETAIL
(V-BLOCK OPTION)

WISCONSIN DEPT OF TRANSPORTATION

APPROVED Matthew R Rauch
for State Traffic Engineer

DATE 7/12/07 PLATE NO. A5-10.1

PROJECT NO:				SHEET NO: 224	E

BANDING

SINGLE SIGN

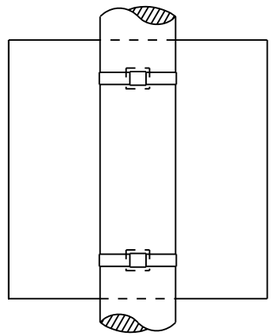

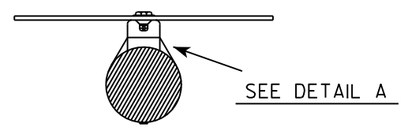

"J" ASSEMBLY

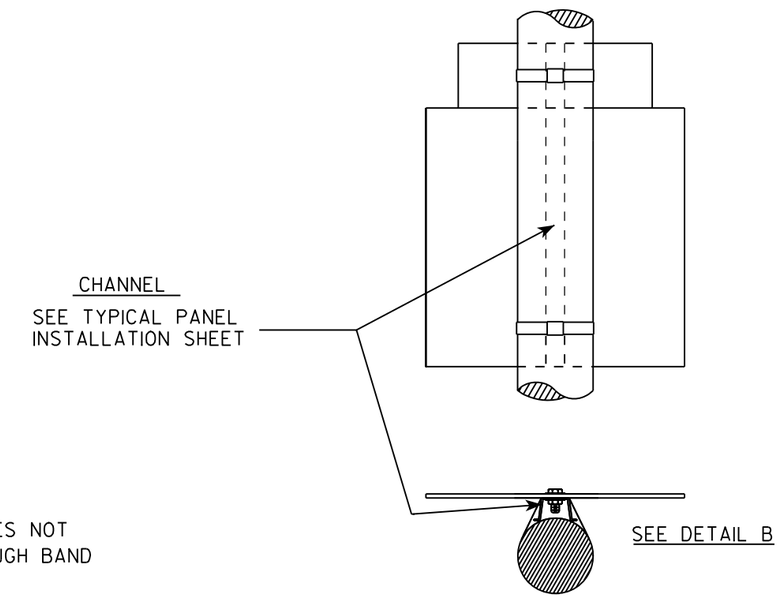

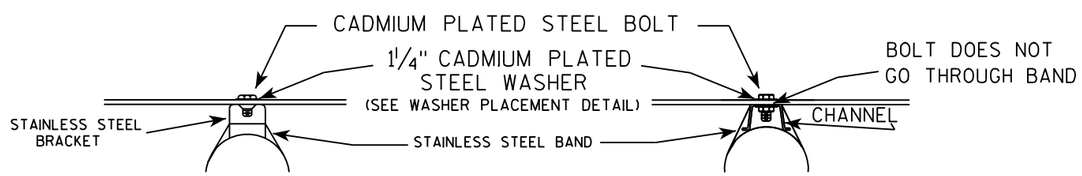

DETAIL A

DETAIL B

WASHER PLACEMENT

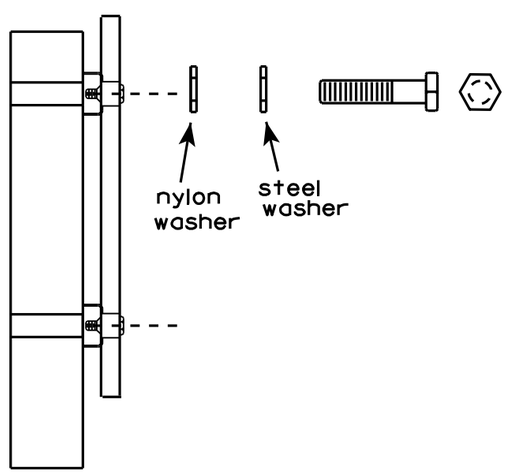

WASHERS (ALL POSTS) -

1-1/4" O.D. X 3/8" I.D. X 1/16" STEEL

1-1/4" O.D. X 3/8" I.D. X .080 NYLON

FOR ALL TYPE H SIGNS

GENERAL NOTES

1. Any sign over 3 feet in width shall use the V-Block banding method. See A5-10 standard plate.
2. Signs 3 feet or greater in height shall have three bracket bands installed. Signs less than 3 feet in height shall have two bracket bands installed.
3. Banding and assembly bracket shall be stainless steel. All bands shall be ¾" in width and 0.025" thickness.

STANDARD SIGN

SIGN BANDING DETAILS

WISCONSIN DEPT OF TRANSPORTATION

APPROVED Matthew R Rauch for State Traffic Engineer

DATE 8/16/13 PLATE NO. A5-9.3

PROJECT NO:	HWY:	COUNTY:		SHEET NO: 225	E

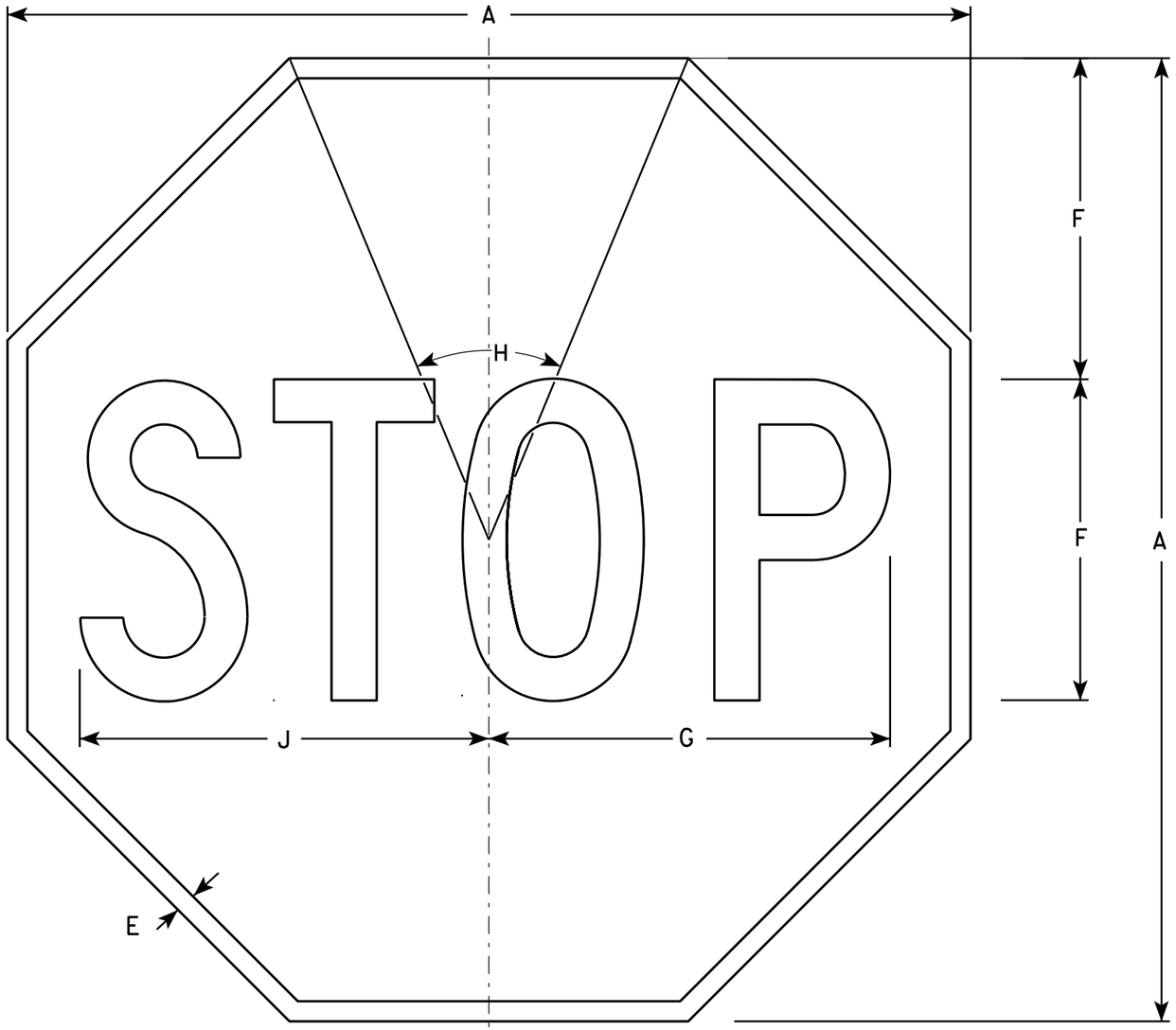

R1-1

NOTES

1. Sign is Type II - Type H Reflective - reference WIS DOT Standard Specification for HIGHWAY and STRUCTURE CONSTRUCTION latest edition.
2. Color:
   Background - Red
   Message - White
3. Message Series - C

SIZE	A	B	C	D	E	F	G	H	I	J	K	L	M	N	O	P	Q	R	S	T	U	V	W	X	Y	Z	Area sq. ft.
1	24				3/8	8	10	45°		10 1/4																	3.31
2S	30				5/8	10	12 1/2	45°		12 3/4																	5.18
2M	36				3/4	12	15	45°		15 3/8																	7.46
3	36				3/4	12	15	45°		15 3/8																	7.46
4	48				1	16	20	45°		20 1/2																	13.25
5	48				1	16	20	45°		20 1/2																	13.25
6	18				3/8	6	7 3/4	45°		7 3/4																	1.86
7	12				1/4	4	5	45°		5 1/8																	0.78

STANDARD SIGN
R1-1

WISCONSIN DEPT OF TRANSPORTATION

APPROVED Matthew R Rauch
for State Traffic Engineer

DATE 12/03/10 PLATE NO. R1-1.12

PROJECT NO: | HWY: | COUNTY: | SHEET NO: 226 | E

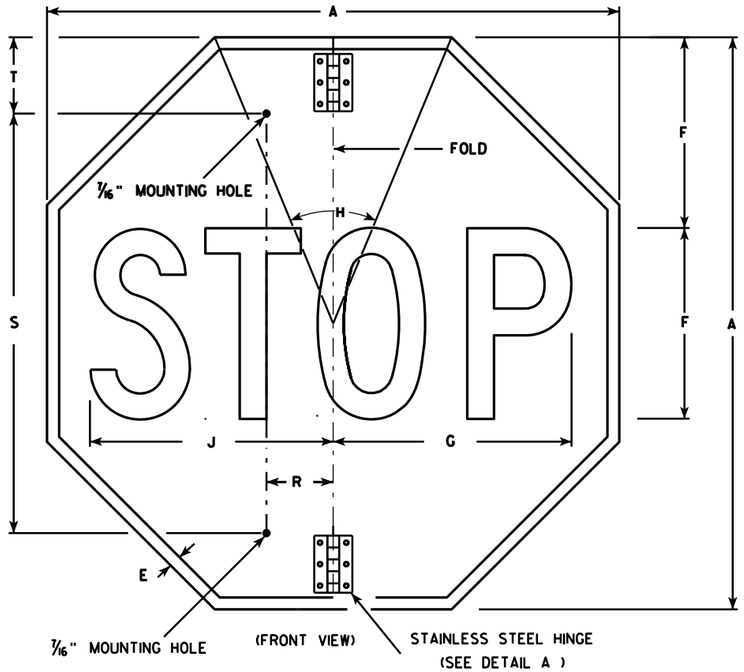

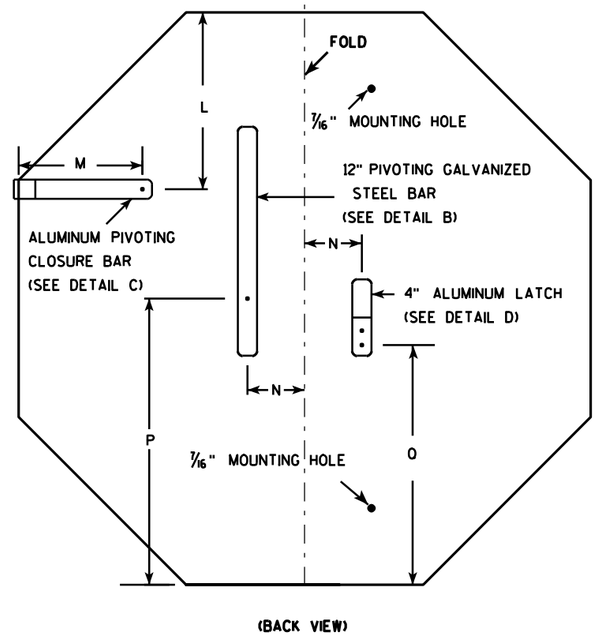

NOTES

1. Sign is Type II - Type H Reflective - reference WIS DOT Standard Specification for HIGHWAY and STRUCTURE CONSTRUCTION latest edition.
2. Color:
   Background - Red
   Message - White
3. Message Series - C
4. All hardware used on the folding STOP sign installation shall conform to 637.2.4 of the WIS DOT Standard Specification.

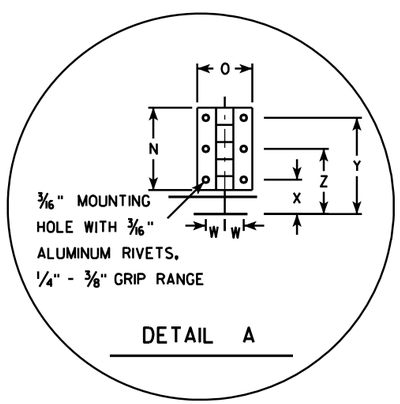

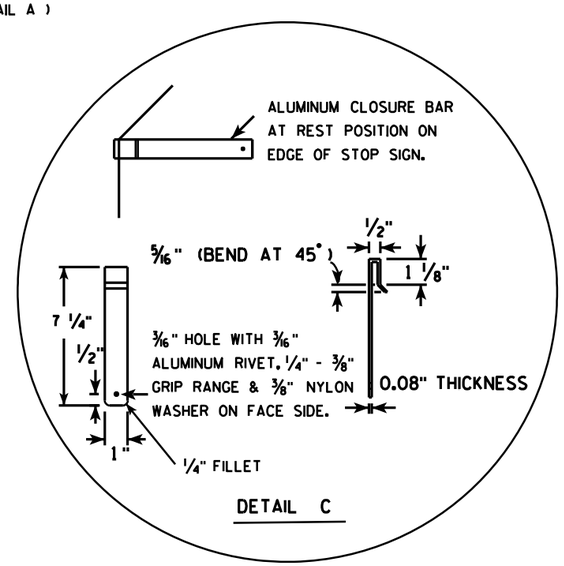

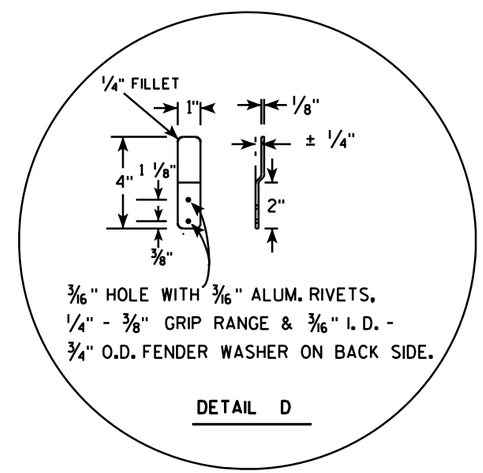

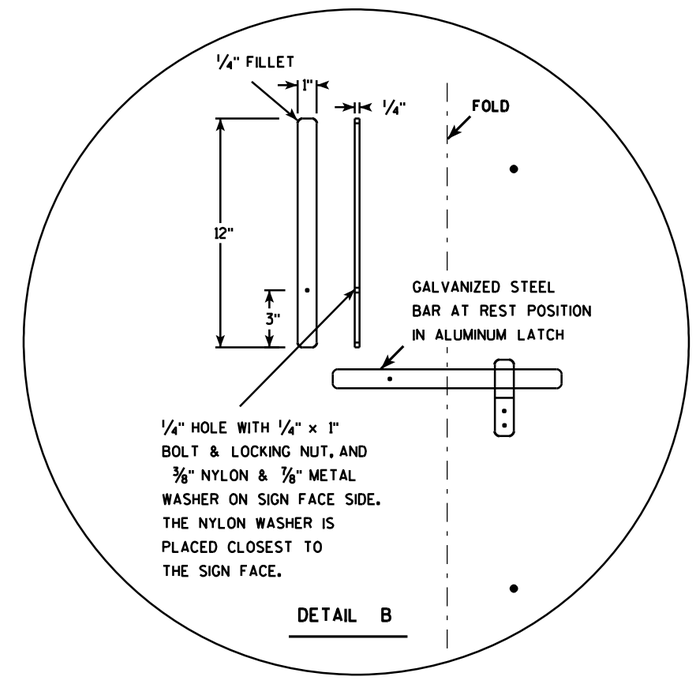

SIZE	A	B	C	D	E	F	G	H	I	J	K	L	M	N	O	P	Q	R	S	T	U	V	W	X	Y	Z	Area sq. ft.
1																											
2S	30				5/8	10	12 1/2	45		12 3/4		9 1/4	6 1/2	3	2	15	12 3/8	2 1/2	22	5			11/16	1 1/4	3 1/2	2 3/8	5.18
2M	36				3/4	12	15	45		15 3/8		11	6 1/2	3	2	18	15 3/8	2 1/2	26	5			11/16	1 1/4	3 1/2	2 3/8	7.46
3	36				3/4	12	15	45		15 3/8		11	6 1/2	3	2	18	15 3/8	2 1/2	26	5			11/16	1 1/4	3 1/2	2 3/8	7.46
4																											
5																											

STANDARD SIGN
R1-1F

WISCONSIN DEPT OF TRANSPORTATION

APPROVED Matthew R Rauch
for State Traffic Engineer

DATE 12/03/10 PLATE NO. R1-1F.3

PROJECT NO:	HWY:	COUNTY:		SHEET NO: 227	E

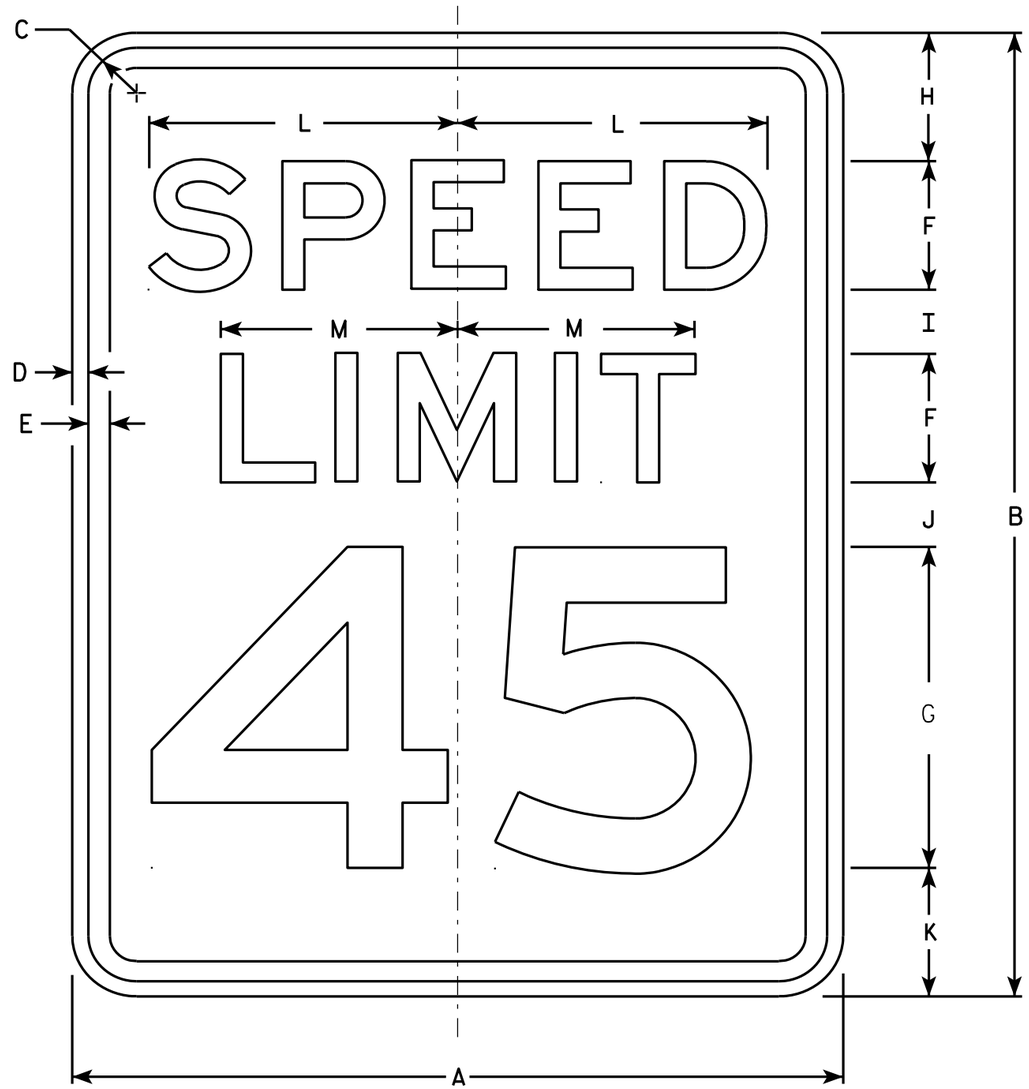

R2-1

NOTES

1. Sign is Type II - Type H Reflective - reference WIS DOT Standard Specification for HIGHWAY and STRUCTURE CONSTRUCTION latest edition.
2. Color:
   Background - White
   Message - Black
3. Message Series - E
4. Corners may be square or rounded when base material is plywood but borders shall be rounded as shown. When base material is metal, the corners and borders shall be rounded.
5. Substitute appropriate numerals and optically adjust spacing to achieve proper balance.

SIZE	A	B	C	D	E	F	G	H	I	J	K	L	M	N	O	P	Q	R	S	T	U	V	W	X	Y	Z	Area sq. ft.
1	18	24	1 1/8	3/8	1/2	3	8	3	2	2	3	7 1/4	5 1/2														3.0
2S	24	30	1 1/8	3/8	1/2	4	10	3	2 1/4	3 3/8	3 3/8	9 5/8	7 3/8														5.0
2M	30	36	1 3/8	1/2	5/8	5	12	5	2 1/2	2 1/2	4	12	9 1/4														7.5
3	36	48	1 3/8	1/2	5/8	6	14	6	5	5	6	14 3/8	11														12.0
4	36	48	1 3/8	1/2	5/8	6	14	6	5	5	6	14 3/8	11														12.0
5	48	60	2 1/4	3/4	1	8	20	6	4 1/2	6 3/4	6 3/4	19 1/4	14 5/8														20.0

STANDARD SIGN
R2-1

WISCONSIN DEPT OF TRANSPORTATION

APPROVED Matthew R Rauch
for State Traffic Engineer

DATE 5/26/10 PLATE NO. R2-1.13

PROJECT NO: | HWY: | COUNTY: | SHEET NO: 228 | E

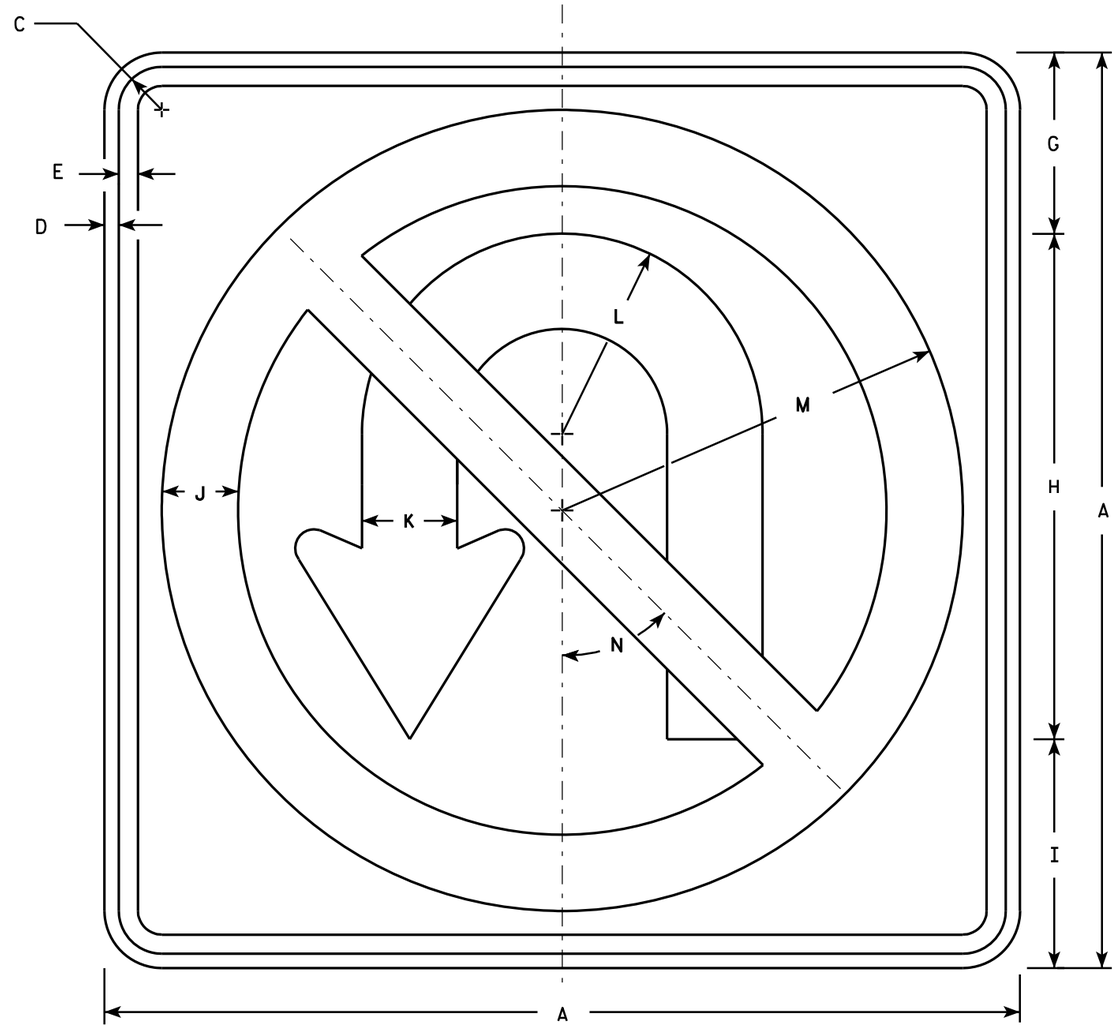

R3-4

NOTES

1. Sign is Type II - Type H Reflective - reference WIS DOT Standard Specification for HIGHWAY and STRUCTURE CONSTRUCTION latest edition.
2. Color:
   Background - White
   Message - See note 4
3. Corners may be square or rounded when base material is plywood but borders shall be rounded as shown. When base material is metal, the corners and borders shall be rounded.
4. Border & Arrow are non reflective black, the circle with diagonal bar is reflective red.

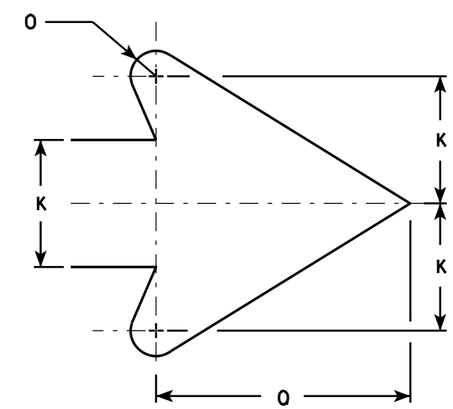

ARROW DETAIL

SIZE	A	B	C	D	E	F	G	H	I	J	K	L	M	N	O	P	Q	R	S	T	U	V	W	X	Y	Z	Area sq. ft.
1																											
2S	24		1 1/8	3/8	1/2		4 3/4	13 1/4	6	2	2 1/2	5 1/4	10 1/2	45°	1/2		5										4.0
2M	36		1 5/8	5/8	3/4		7 1/8	19 7/8	9	3	3 3/4	7 7/8	15 3/4	45°	3/4		7 5/8										9.0
3	36		1 5/8	5/8	3/4		7 1/8	19 7/8	9	3	3 3/4	7 7/8	15 3/4	45°	3/4		7 5/8										9.0
4	36		1 5/8	5/8	3/4		7 1/8	19 7/8	9	3	3 3/4	7 7/8	15 3/4	45°	3/4		7 5/8										9.0
5	36		1 5/8	5/8	3/4		7 1/8	19 7/8	9	3	3 3/4	7 7/8	15 3/4	45°	3/4		7 5/8										9.0

STANDARD SIGN
R3-4

WISCONSIN DEPT OF TRANSPORTATION

APPROVED Matthew R Rauch
for State Traffic Engineer

DATE 12/08/10 PLATE NO. R3-4.11

PROJECT NO: | HWY: | COUNTY: | SHEET NO: 229 | E

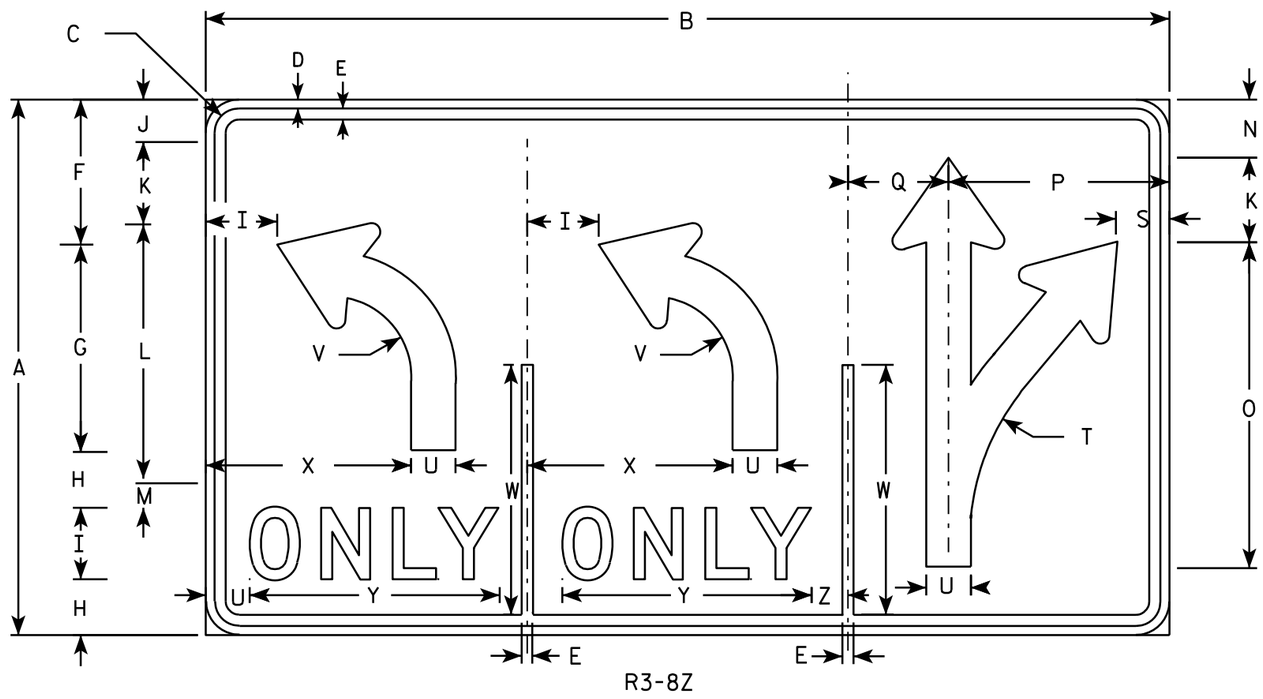

R3-8Z

NOTES

1. Sign is Type II - Type H Reflective - reference WIS DOT Standard Specification for HIGHWAY and STRUCTURE CONSTRUCTION latest edition.
2. Color:
   Background - WHITE
   Message - BLACK
3. Message Series - D
4. Corners may be square or rounded when base material is plywood but borders shall be rounded as shown. When base material is metal, the corners and borders shall be rounded.

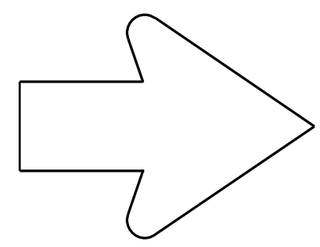

SEE R3-8 FOR ARROW DETAIL

SIZE	A	B	C	D	E	F	G	H	I	J	K	L	M	N	O	P	Q	R	S	T	U	V	W	X	Y	Z	Area sq. ft.
1																											
2S	30	54	1 3/8	1/2	5/8	8 1/8	11 5/8	3 1/8	4	2 1/4	4 3/4	14 1/4	1 5/8	3 1/4	18 1/4	12 3/8	5 5/8		3	13 1/4	2 1/2	4 1/2	14	11 1/2	14	2	11.25
2M	30	54	1 3/8	1/2	5/8	8 1/8	11 5/8	3 1/8	4	2 1/4	4 3/4	14 1/4	1 5/8	3 1/4	18 1/4	12 3/8	5 5/8		3	13 1/4	2 1/2	4 1/2	14	11 1/2	14	2	11.25
3																											
4	48	84	2 1/4	3/4	1	13 1/4	18 1/2	5 1/8	6	3 1/2	7	29 1/8	2 7/8	5 1/4	29 1/8	18 5/8	8 3/4		4 3/8	21 7/8	3 3/4	7 1/4	22 3/8	17 1/4	20 5/8	3 1/4	28.0
5	48	84	2 1/4	3/4	1	13 1/4	18 1/2	5 1/8	6	3 1/2	7	29 1/8	2 7/8	5 1/4	29 1/8	18 5/8	8 3/4		4 3/8	21 7/8	3 3/4	7 1/4	22 3/8	17 1/4	20 5/8	3 1/4	28.0

STANDARD SIGN
R3-8Z

WISCONSIN DEPT OF TRANSPORTATION

APPROVED Matthew R Rauch
for State Traffic Engineer

DATE 3/24/2011 PLATE NO. R3-8Z.2

PROJECT NO:

SHEET NO: 230 E

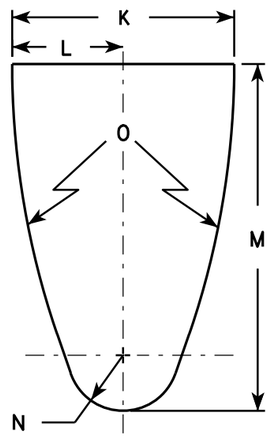

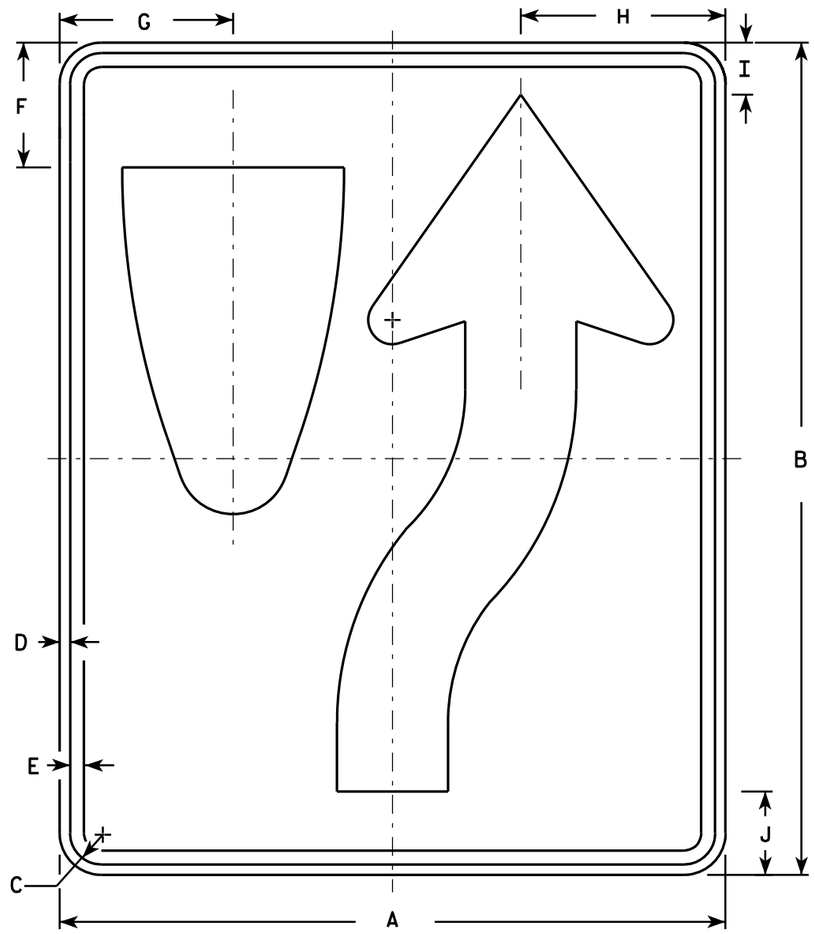

R4-7

NOTES

1. Sign is Type II - Type H Reflective - reference WIS DOT Standard Specification for HIGHWAY and STRUCTURE CONSTRUCTION latest edition. material is plywood but borders shall be rounded
2. Color:
   Background - White
   Message - Black
3. Corners may be square or rounded when base as shown. When base material is metal, the corners and borders shall be rounded.
4. R4-8 is the same as R4-7 except Legend is reversed.

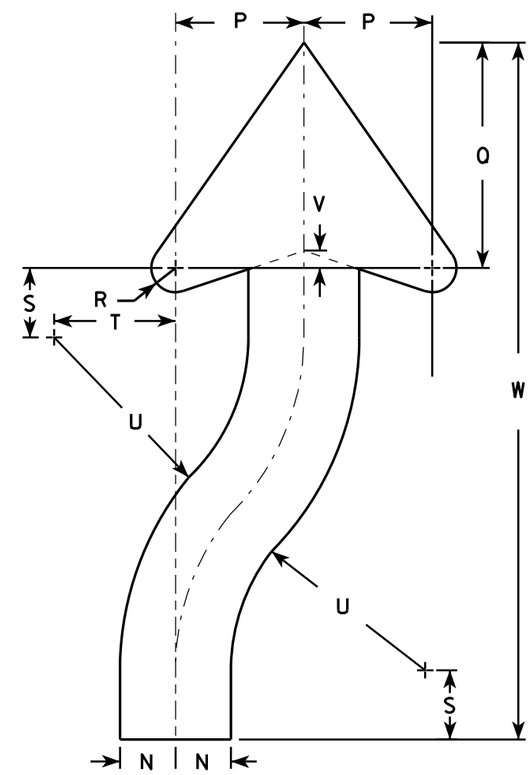

ARROW DETAIL

SIZE	A	B	C	D	E	F	G	H	I	J	K	L	M	N	O	P	Q	R	S	T	U	V	W	X	Y	Z	Area sq. ft.
1	18	24	1 1/8	3/8	1/2	3 3/8	4 3/4	5 1/2	1 3/8	2 1/4	6	3	9 3/8	1 1/2	22 1/2	3 1/2	6 1/8	5/8	1 7/8	3 1/4	6 3/4	1/2	20 3/8				3.0
2S	24	30	1 1/8	3/8	1/2	4 1/2	6 1/4	7 3/8	1 7/8	3	8	4	12 1/2	2	30	4 5/8	8 1/8	7/8	2 1/2	4 3/8	9	5/8	25 1/8				5.0
2M	24	30	1 1/8	3/8	1/2	4 1/2	6 1/4	7 3/8	1 7/8	3	8	4	12 1/2	2	30	4 5/8	8 1/8	7/8	2 1/2	4 3/8	9	5/8	25 1/8				5.0
3	36	48	1 3/4	1/2	5/8	6 3/4	9 3/8	11 1/8	2 7/8	4 1/2	12	6	18 3/4	3	45	6 7/8	12 1/4	1 1/4	3 3/4	6 5/8	13 1/2	1	40 3/4				12.0
4	36	48	1 3/4	1/2	5/8	6 3/4	9 3/8	11 1/8	2 7/8	4 1/2	12	6	18 3/4	3	45	6 7/8	12 1/4	1 1/4	3 3/4	6 5/8	13 1/2	1	40 3/4				12.0
5	48	60	2 1/4	3/4	1	9	12 1/2	14 3/4	3 3/4	6	16	8	25	4	60	9 1/4	16 1/4	1 5/8	5	8 3/4	18	1 1/4	50 1/4				20.0

STANDARD SIGN
R4-7 & R4-8

WISCONSIN DEPT OF TRANSPORTATION

APPROVED Matthew R Rauch for State Traffic Engineer

DATE 3/25/2011 PLATE NO. R4-7.8

PROJECT NO:	HWY:	COUNTY:		SHEET NO: 231	E

R7-52

NOTES

1. Sign is Type II - Type H Reflective - reference WIS DOT Standard Specification for HIGHWAY and STRUCTURE CONSTRUCTION latest edition.
2. Color:
   Background - White
   Message - Red
3. Message Series - See Note 5
4. Corners may be square or rounded when base material is plywood but borders shall be rounded as shown. When base material is metal, the corners and borders shall be rounded.
5. Lines 1, 3 and 4 are series C, line 2 is series B.
6. R7-52D (double arrow)
   R7-52L (left arrow)
   R7-52R (right arrow)

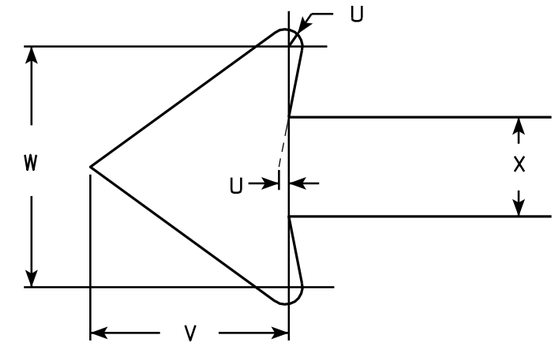

ARROW DETAIL

SIZE	A	B	C	D	E	F	G	H	I	J	K	L	M	N	O	P	Q	R	S	T	U	V	W	X	Y	Z	Area sq. ft.
1	12	18	1 1/8	3/8	3/8	3	1 7/8	1 1/2	7/8	7/8	2	2 1/2	2	2	4 7/8	4 7/8	5 1/8	5	3 1/8	3 7/8	1/8	1 1/2	1 3/4	3/4			1.5
2S	18	24	1 1/8	3/8	1/2	4	2 1/2	2 1/2	1 1/4	1	2	3 1/4	2 3/4	2 5/8	7 1/8	7	6 3/8	6 1/4	3 7/8	5 7/8	1/4	2 1/4	2 5/8	1 1/8			3.0
2M	24	30	1 1/8	3/8	1/2	5	3	3	2	1 1/4	2 1/2	4	3 1/4	3 3/8	9 1/4	9 1/4	7 5/8	7 5/8	4 3/4	7 3/4	1/4	3	3 1/2	1 1/2			5.0
3	24	30	1 1/8	3/8	1/2	5	3	3	2	1 1/4	2 1/2	4	3 1/4	3 3/8	9 1/4	9 1/4	7 5/8	7 5/8	4 3/4	7 3/4	1/4	3	3 1/2	1 1/2			5.0
4																											
5																											

STANDARD SIGN
R7-52

WISCONSIN DEPT OF TRANSPORTATION

APPROVED Matthew R Rauch
for State Traffic Engineer

DATE 3/31/2011 PLATE NO. R7-52.6

PROJECT NO:	HWY:	COUNTY:		SHEET NO: 232	E

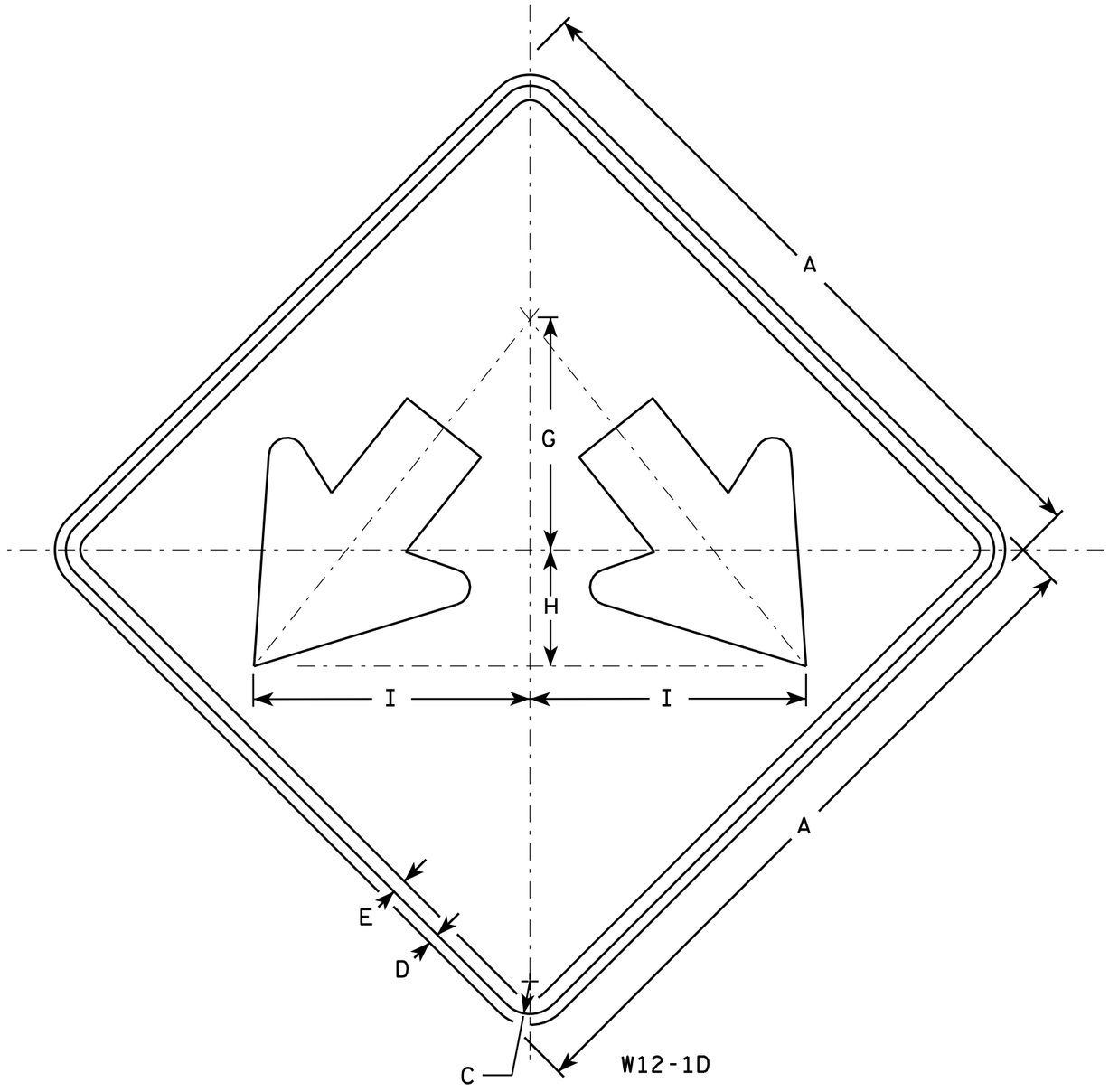

NOTES

1. Sign is Type II - Type F Reflective - reference WIS DOT Standard Specification for HIGHWAY and STRUCTURE CONSTRUCTION latest edition.
2. Color:
   Background - Yellow
   Message - Black
3. Corners may be square or rounded when base material is plywood but borders shall be rounded as shown. When base material is metal, the corners and borders shall be rounded.

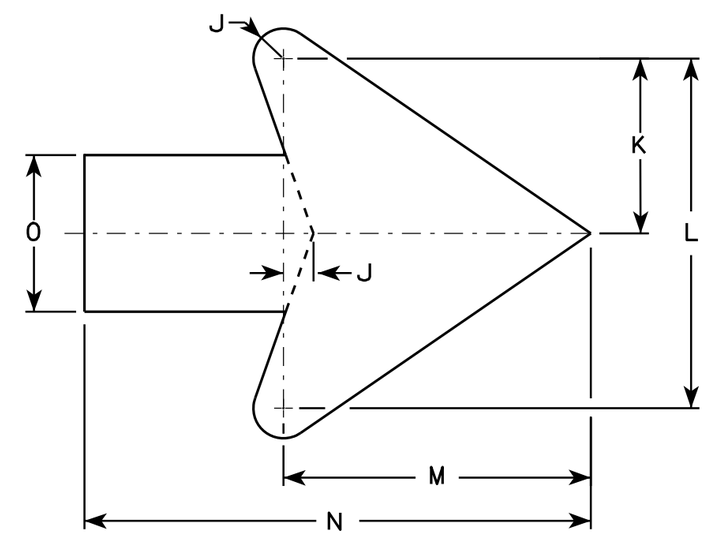

Arrow Detail

SIZE	A	B	C	D	E	F	G	H	I	J	K	L	M	N	O	P	Q	R	S	T	U	V	W	X	Y	Z	Area sq. ft.
1																											
2S	24		1 1/8	1/2	3/8		8	4	9 1/2	3/8	3 3/8	7 1/4	6 3/8	10 3/8	3 1/4												4.0
2M	24		1 1/8	1/2	3/8		8	4	9 1/2	3/8	3 3/8	7 1/4	6 3/8	10 3/8	3 1/4												4.0
3	30		1 3/8	1/2	5/8		10	5	11 7/8	3/4	4 1/2	9	7 7/8	13	4												6.25
4	36		1 3/8	1/2	5/8		12	6	14 1/4	1	5 1/2	10 7/8	9 5/8	15 3/4	4 3/4												9.0
5	48		2 1/4	3/4	1		16	8	19	1 1/4	7 1/4	14 1/2	12 3/4	21	6 1/4												16.0

STANDARD SIGN
W12-1D

WISCONSIN DEPT OF TRANSPORTATION

APPROVED Matthew R Rauch
for State Traffic Engineer

DATE 3/13/13 PLATE NO. W12-1D.15

PROJECT NO: | HWY: | COUNTY: | SHEET NO: 233 | E

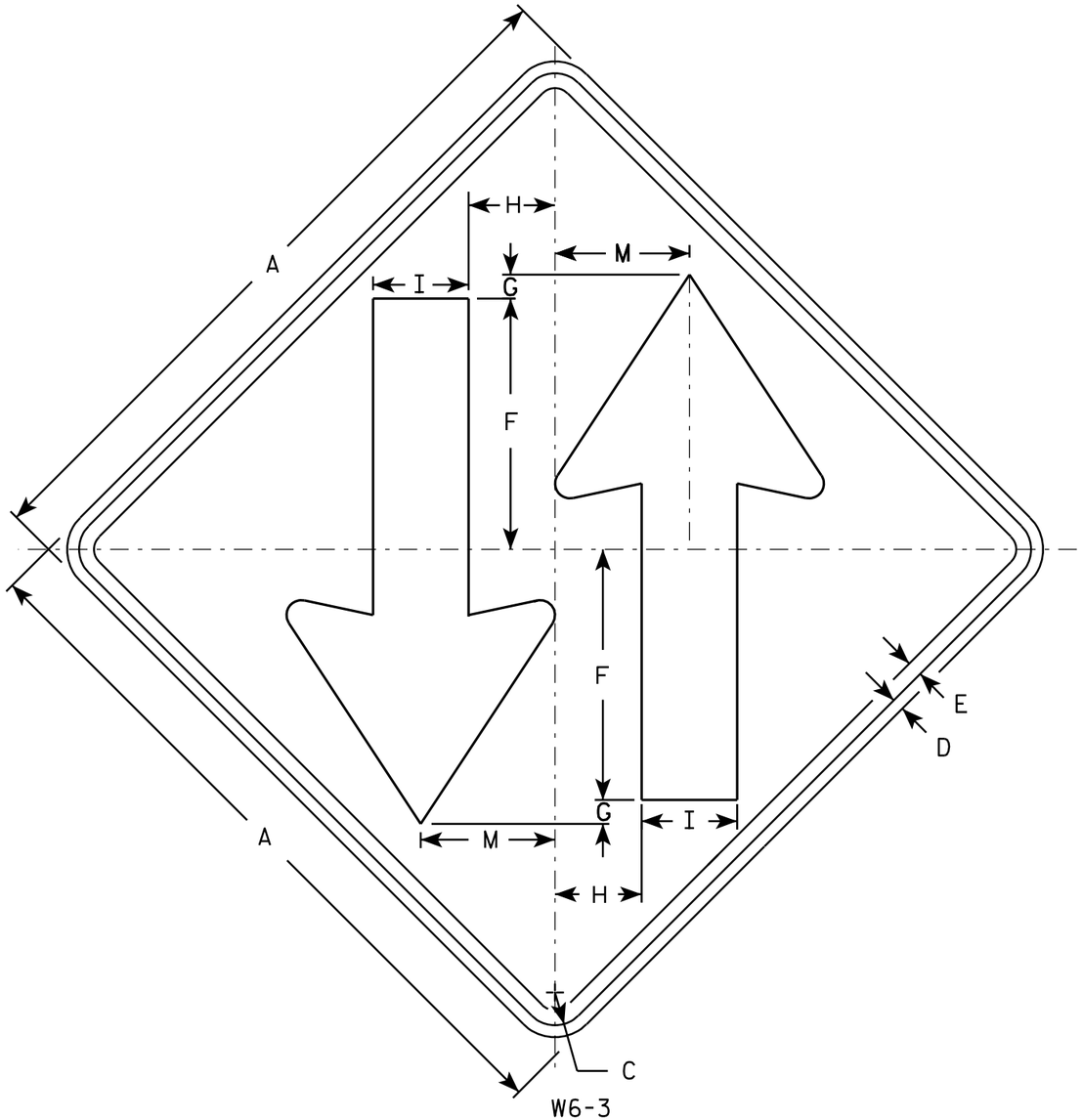

W6-3

NOTES

1. Sign is Type II - Type F Reflective - reference WIS DOT Standard Specification for HIGHWAY and STRUCTURE CONSTRUCTION latest edition.
2. Color:
   Background - Yellow
   Message - Black
3. Corners may be square or rounded when base material is plywood but borders shall be rounded as shown. When base material is metal, the corners and borders shall be rounded.

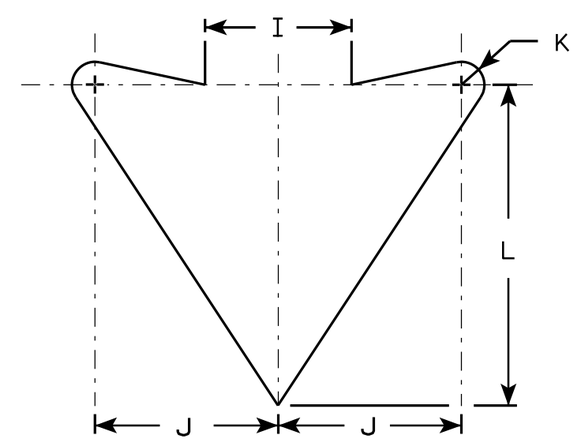

ARROW DETAIL

SIZE	A	B	C	D	E	F	G	H	I	J	K	L	M	N	O	P	Q	R	S	T	U	V	W	X	Y	Z	Area sq. ft.
1	30		1 3/8	1/2	5/8	10 1/2	1	3 5/8	4	5	5/8	8 3/4	5 5/8														6.25
2S	36		1 5/8	5/8	3/4	12	1	4 1/4	5	6	3/4	10 1/2	6 3/4														9.0
2M	36		1 5/8	5/8	3/4	12	1	4 1/4	5	6	3/4	10 1/2	6 3/4														9.0
3																											
4	48		2 1/4	3/4	1	15 1/2	1	6	6	8	1	14	9														16.0
5	48		2 1/4	3/4	1	15 1/2	1	6	6	8	1	14	9														16.0

STANDARD SIGN
W6-3

WISCONSIN DEPT OF TRANSPORTATION

APPROVED Matthew R Rauch
for State Traffic Engineer

DATE 03/12/13 PLATE NO. W6-3.10

PROJECT NO: | HWY: | COUNTY: | SHEET NO: 234 | E

EARTHWORK COFFEE RD

BASELINE STATION	CUT AREA (SF)	CUT VOLUME (CY)	FILL AREA (SF)	UNADJUSTED FILL VOLUME (CY)	ADJUSTED FILL VOLUME (CY)	MASS HAUL (CY)
165+00.	146	0	0	0	0	0
165+50.	187	308	0	0	0	308
166+00.	188	347	0	0	0	655
166+50.	192	352	0	0	0	1007
167+00.	173	339	0	0	0	1346
167+50.	106	259	0	0	0	1605
168+00.	34	130	15	15	17	1718
168+50.	22	52	36	36	43	1727
169+00.	15	34	44	45	54	1707
169+50.	10	23	58	61	73	1657
170+00.	3	12	72	78	93	1576
170+50.	1	4	75	82	98	1482
171+00.	1	1	78	84	101	1382
171+50.	0	1	85	88	105	1278
172+00.	1	1	74	77	92	1187
172+50.	3	1	54	54	65	1123
173+00.	9	9	33	33	39	1093
173+50.	14	21	23	23	27	1087
174+00.	12	24	28	28	34	1077
174+50.	6	17	35	35	42	1052
175+00.	5	11	38	38	45	1018
175+50.	8	12	35	35	42	988
176+00.	13	19	27	27	33	974
176+50.	17	28	23	23	27	975
177+00.	16	31	24	24	29	977
177+50.	14	28	27	27	33	972
178+00.	16	28	16	16	19	981
178+50.	32	44	4	4	5	1020
179+00.	45	70	6	6	7	1083
179+50.	78	113	1	1	1	1195
180+00.	69	136	1	1	1	1330
180+50.	59	118	2	2	3	1445
181+00.	43	94	10	11	13	1526
181+50.	48	84	13	13	16	1594
182+00.	48	89	15	15	18	1665
182+50.	28	70	32	32	38	1697
183+00.	31	54	41	43	51	1700
183+50.	29	55	37	38	46	1709
184+00.	30	55	40	42	51	1713
184+50.	34	59	28	32	38	1734
185+00.	25	55	34	37	45	1744
185+50.	27	48	22	24	28	1764
186+00.	37	59	14	14	17	1806
186+50.	60	90	6	6	7	1889
187+00.	46	98	5	5	6	1981

EARTHWORK COFFEE RD (CONTINUED)

BASELINE STATION	CUT AREA (SF)	CUT VOLUME (CY)	FILL AREA (SF)	UNADJUSTED FILL VOLUME (CY)	ADJUSTED FILL VOLUME (CY)	MASS HAUL (CY)
187+50.	53	91	5	5	6	2066
188+00.	89	131	2	2	2	2195
188+50.	85	161	2	4	4	2352
189+00.	107	178	1	2	3	2527
189+50.	115	205	0	1	1	2731
190+00.	146	241	0	0	0	2972
190+50.	112	239	1	0	1	3210
191+00.	175	265	0	0	1	3474
191+50.	167	316	0	0	0	3790
192+00.	236	372	0	0	0	4162
192+50.	312	507	0	0	0	4669
193+00.	356	619	0	0	0	5288
193+50.	347	651	0	0	0	5939
194+00.	116	428	5	4	5	6362
194+50.	106	205	9	13	15	6552
195+00.	103	193	12	19	23	6722
195+50.	101	188	7	17	20	6890
196+00.	121	205	4	9	11	7084
196+50.	166	265	0	3	4	7345
197+00.	223	360	0	0	0	7705
197+50.	283	468	0	0	0	8173
198+00.	286	527	0	0	0	8700
198+50.	259	504	0	0	0	9204
199+00.	263	483	0	0	0	9687
199+50.	296	518	0	0	0	10205
200+00.	249	504	0	0	0	10709
200+50.	157	376	0	0	0	11085
201+00.	91	230	14	13	16	11299
201+50.	63	143	38	48	58	11384
202+00.	38	94	29	62	74	11404
202+50.	23	57	43	66	80	11381
203+00.	13	33	65	100	119	11295
203+50.	19	30	68	122	147	11178
204+00.	29	45	78	135	162	11061
204+50.	35	60	73	140	168	10953
205+00.	46	75	33	98	117	10911
205+50.	66	103	26	54	65	10949
206+00.	119	171	7	30	36	11084
206+50.	168	266	0	7	8	11342
207+00.	208	348	0	0	0	11690
207+50.	151	333	2	2	3	12020
208+00.	91	224	19	20	24	12220
208+50.	61	141	40	55	66	12295
209+00.	46	99	41	76	91	12303
209+50.	56	94	18	55	66	12331

EARTHWORK COFFEE RD (CONTINUED)

BASELINE STATION	CUT AREA (SF)	CUT VOLUME (CY)	FILL AREA (SF)	UNADJUSTED FILL VOLUME (CY)	ADJUSTED FILL VOLUME (CY)	MASS HAUL (CY)
210+00.	57	105	20	35	42	12394
210+50.	65	114	17	34	41	12467
211+00.	88	142	8	23	28	12581
211+50.	106	180	9	15	18	12743
212+00.	128	216	5	12	15	12944
212+50.	141	249	6	10	12	13181
213+00.	126	247	14	19	23	13405
213+50.	52	165	32	43	52	13518
214+00.	35	80	65	90	108	13490
214+50.	46	75	60	116	139	13426
215+00.	77	114	62	113	136	13404
215+50.	106	169	13	69	83	13490
216+00.	174	259	5	16	19	13730
216+50.	167	315	1	5	6	14039
217+00.	190	330	1	1	2	14367
217+50.	164	328	1	1	2	14693
218+00.	0	152	0	0	1	14844
218+50.	0	0	0	0	0	14844
219+00.	164	152	3	2	3	14993
219+50.	155	295	3	5	6	15282
220+00.	201	329	1	4	4	15607
220+50.	252	419	3	4	4	16022
221+00.	259	473	2	5	6	16489
221+50.	166	394	7	8	10	16873
222+00.	121	266	11	16	20	17119
222+50.	76	182	14	23	28	17273
223+00.	41	109	25	36	43	17339
223+50.	57	91	28	49	59	17371
224+00.	82	129	23	47	56	17444
224+50.	108	176	17	37	44	17576
225+00.	116	208	19	34	40	17744
225+50.	150	246	16	33	39	17951
226+00.	193	318	17	31	37	18232
226+50.	205	369	14	28	34	18567
227+00.	188	364	10	22	27	18904
227+50.	132	296	8	17	20	19180
228+00.	145	256	7	14	17	19419
228+50.	122	246	5	11	13	19652
229+00.	128	231	3	7	9	19874
229+50.	146	253	0	3	4	20123
230+00.	151	275	4	3	4	20394
230+50.	146	275	4	6	8	20661
231+00.	183	305	2	5	6	20960
231+50.	187	343	2	3	4	21299
232+00.	193	352	5	6	7	21644
232+50.	212	375	3	7	8	22011
233+00.	197	379	0	3	3	22387
233+50.	86	262	1	1	1	22648
TOTALS		**26836**		**3491**	**4189**	

9

9

STATE PROJECT NUMBER: 2722-10-70 | HWY: COFFEE ROAD | COUNTY: WAUKESHA | COMPUTER EARTHWORK DATA | SHEET NO: 235 | E

EARTHWORK ST FRANCIS RD

BASELINE STATION	CUT AREA (SF)	CUT VOLUME (CY)	FILL AREA (SF)	UNADJUSTED FILL VOLUME (CY)	ADJUSTED FILL VOLUME (CY)	MASS HAUL (CY)
10+24.	20	0	0	0	0	0
10+50.	37	28	28	1	1	27
10+81.44	45	48	1	1	1	47
TOTALS		**75**		**2**	**2**	

EARTHWORK 159TH ST

BASELINE STATION	CUT AREA (SF)	CUT VOLUME (CY)	FILL AREA (SF)	UNADJUSTED FILL VOLUME (CY)	ADJUSTED FILL VOLUME (CY)	MASS HAUL (CY)
37+40.	68	0	0	0	0	0
38+00.	52	96	2	2	2	94
38+50.	97	138	1	3	3	229
39+00.	140	219	0	1	1	447
39+37.	134	188	0	0	0	635
39+89.	108	0	0	0	0	635
40+00.	94	41	0	0	0	676
40+50.	94	174	0	0	0	850
41+00.	90	170	0	0	0	1020
41+50.	64	142	0	0	0	1162
42+00.	43	99	0	0	0	1261
42+07.	43	11	0	0	0	1272
TOTALS		**1277**		**5**	**6**	

EARTHWORK Monterey

BASELINE STATION	CUT AREA (SF)	CUT VOLUME (CY)	FILL AREA (SF)	UNADJUSTED FILL VOLUME (CY)	ADJUSTED FILL VOLUME (CY)	MASS HAUL (CY)
70+30.	91	0	0	0	0	0
70+50.	53	53	0	0	0	53
71+00.	79	122	1	1	1	174
71+50.	63	131	1	1	1	304
72+00.	52	106	0	1	1	409
72+50.	43	87	0	0	0	496
73+00.	51	86	0	0	0	582
73+45.	46	80	0	0	0	662
TOTALS		**667**		**3**	**3**	

EARTHWORK 153RD ST

BASELINE STATION	CUT AREA (SF)	CUT VOLUME (CY)	FILL AREA (SF)	UNADJUSTED FILL VOLUME (CY)	ADJUSTED FILL VOLUME (CY)	MASS HAUL (CY)
25+25.	43	0	0	0	0	0
25+50.	47	41	0	0	0	41
26+00.	58	97	0	0	0	138
26+40.	55	83	0	0	0	221
TOTALS		**222**		**0**	**0**	

EARTHWORK BACKLOT BERM

BASELINE STATION	CUT AREA (SF)	CUT VOLUME (CY)	FILL AREA (SF)	UNADJUSTED FILL VOLUME (CY)	ADJUSTED FILL VOLUME (CY)	MASS HAUL (CY)
20+03.	0	0	0	0	0	0
20+09.	0	0	12	1	2	-2
20+50.	0	0	9	16	19	-21
21+00.	0	0	12	19	23	-44
21+50.	0	0	9	19	23	-67
22+00.	0	0	12	19	23	-90
22+50.	0	0	14	24	28	-118
23+00.	0	0	12	24	29	-147
23+50.	0	0	11	22	26	-173
23+91.	0	0	12	18	21	-194
23+97.	0	0	0	1	2	-196
TOTALS		**0**		**164**	**197**	

EARTHWORK DETENTION POND

BASELINE STATION	CUT AREA (SF)	CUT VOLUME (CY)	FILL AREA (SF)	UNADJUSTED FILL VOLUME (CY)	ADJUSTED FILL VOLUME (CY)	MASS HAUL (CY)
		17444		7391	8869	8575
TOTALS		**17444**		**7391**	**8869**	

9

9

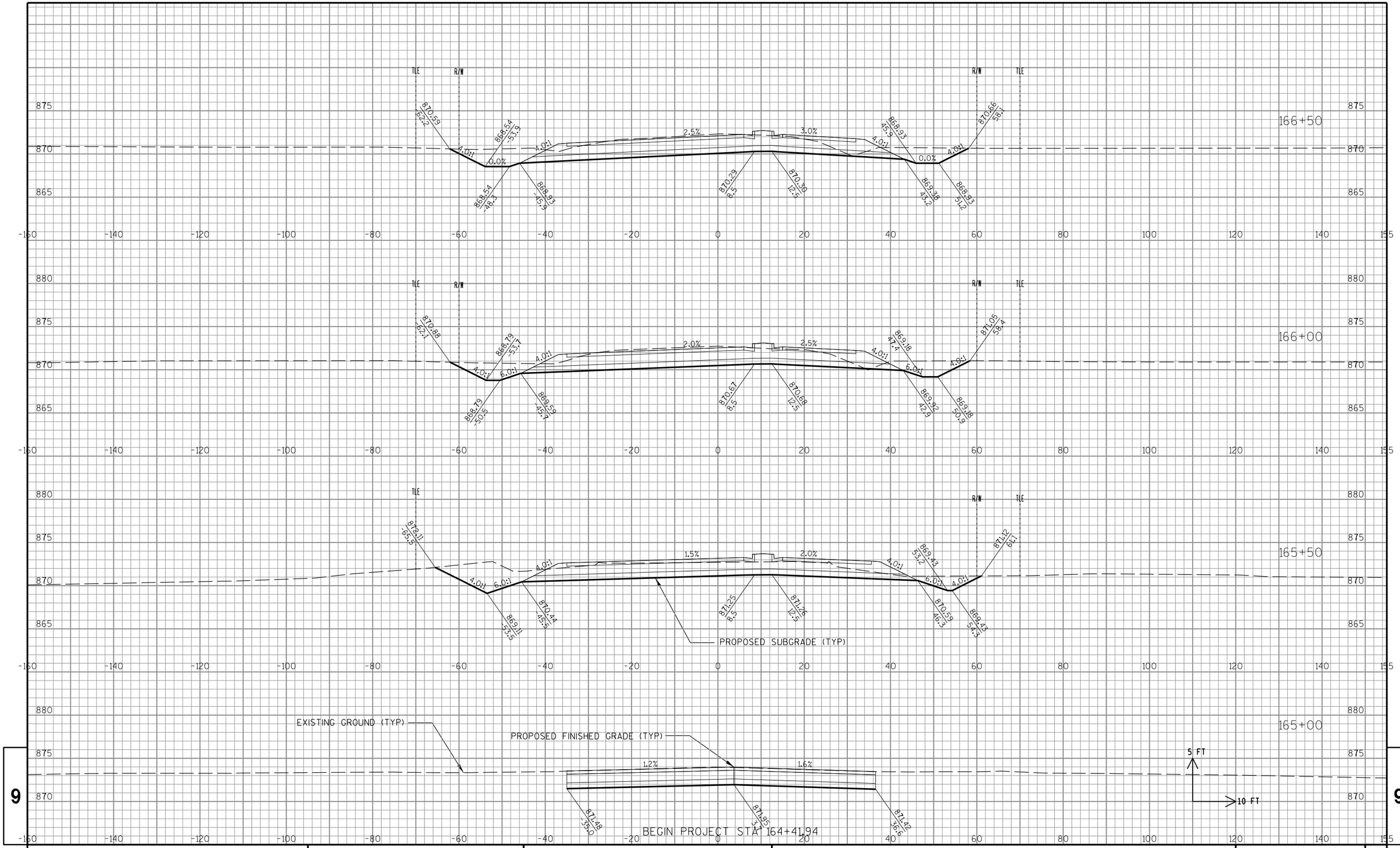

9

9

STATE PROJECT NO: 2722-10-70	HWY: COFFEE ROAD	COUNTY: WAUKESHA	CROSS SECTIONS: COFFEE RD	SHEET NO: . 237	E

FILE NAME : S:\Wauk_Co\NewBerlin\Gov\08.0099 Coffee Rd\Design\090201_XS_Coffee.dgn PLOT DATE : 10/30/2013 PLOT BY : Nick_B PLOT NAME : PLOT SCALE : 1:20

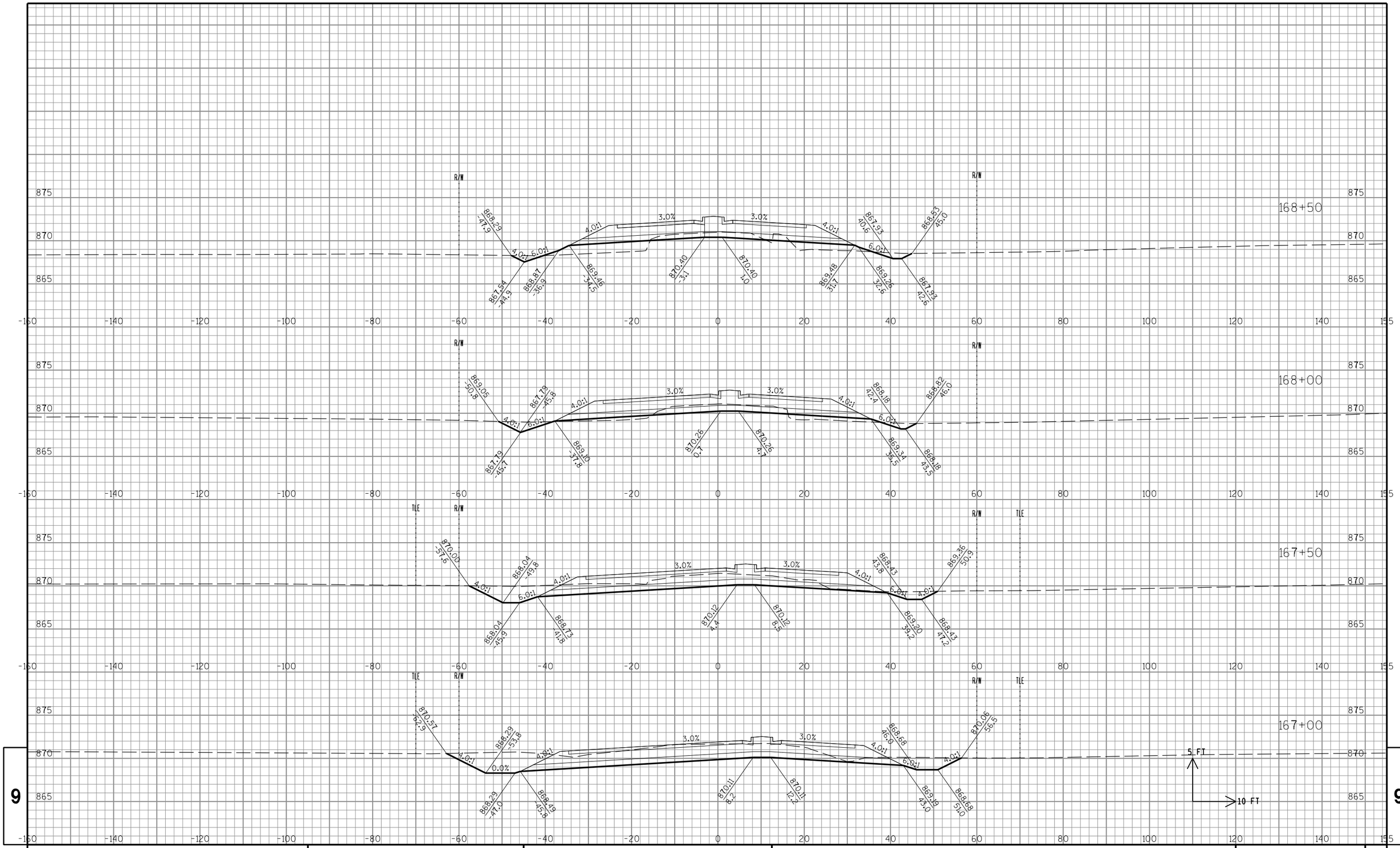

STATE PROJECT NO: 2722-10-70	HWY: COFFEE ROAD	COUNTY: WAUKESHA	CROSS SECTIONS: COFFEE RD	SHEET NO: . 238	E

FILE NAME : S:\Wauk_Co\NewBerlin\Gov\08.0099 Coffee Rd\Design\090201_XS_Coffee.dgn PLOT DATE : 10/30/2013 PLOT BY : Nick_B PLOT NAME : PLOT SCALE : 1:20

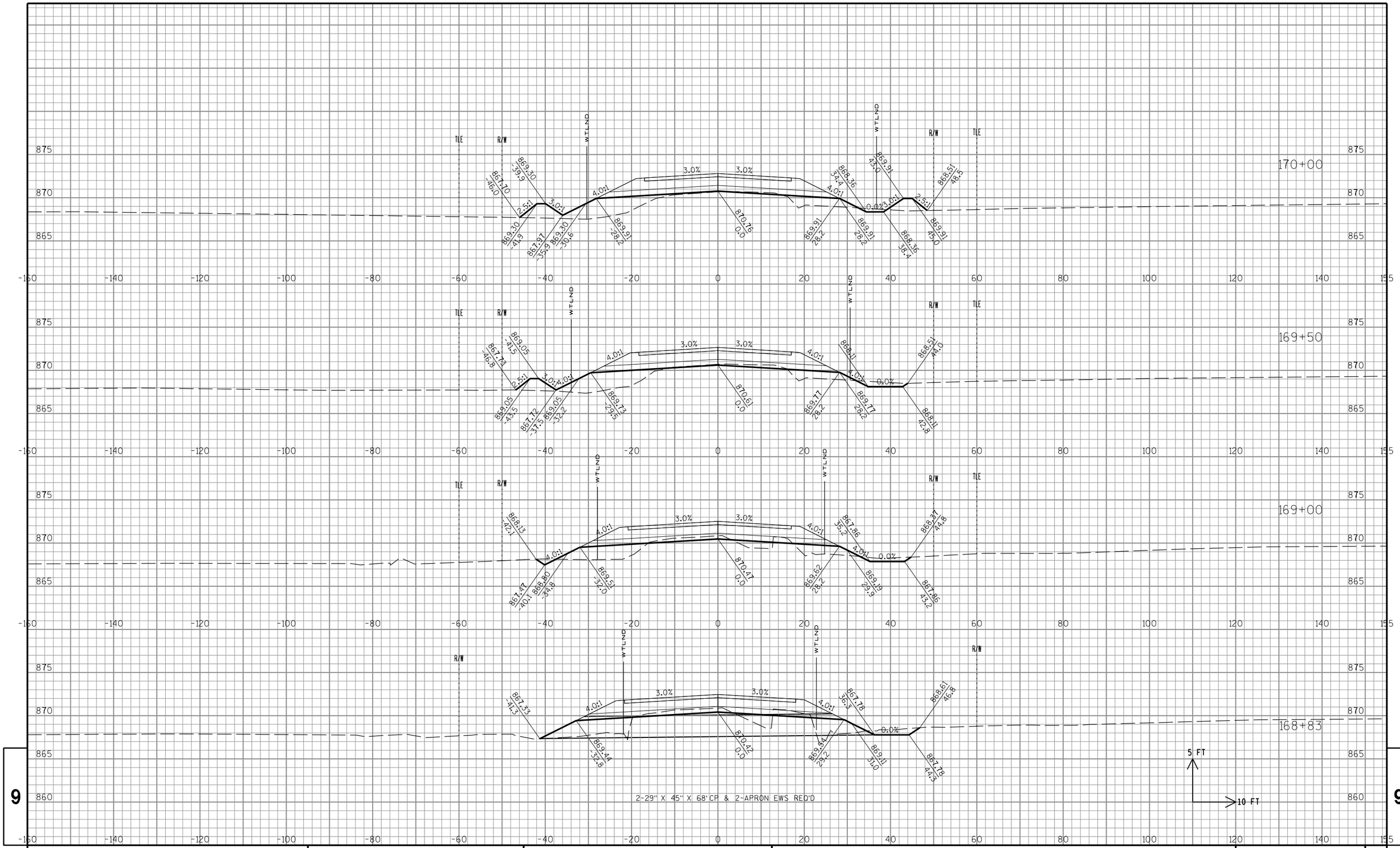

9

STATE PROJECT NO: 2722-10-70	HWY: COFFEE ROAD	COUNTY: WAUKESHA	CROSS SECTIONS: COFFEE RD	SHEET NO: . 239	E

FILE NAME : S:\Wauk_Co\NewBerlin\Gov\08.0099 Coffee Rd\Design\090201_XS_Coffee.dgn PLOT DATE : 10/30/2013 PLOT BY : Nick_B PLOT NAME : PLOT SCALE : 1:20

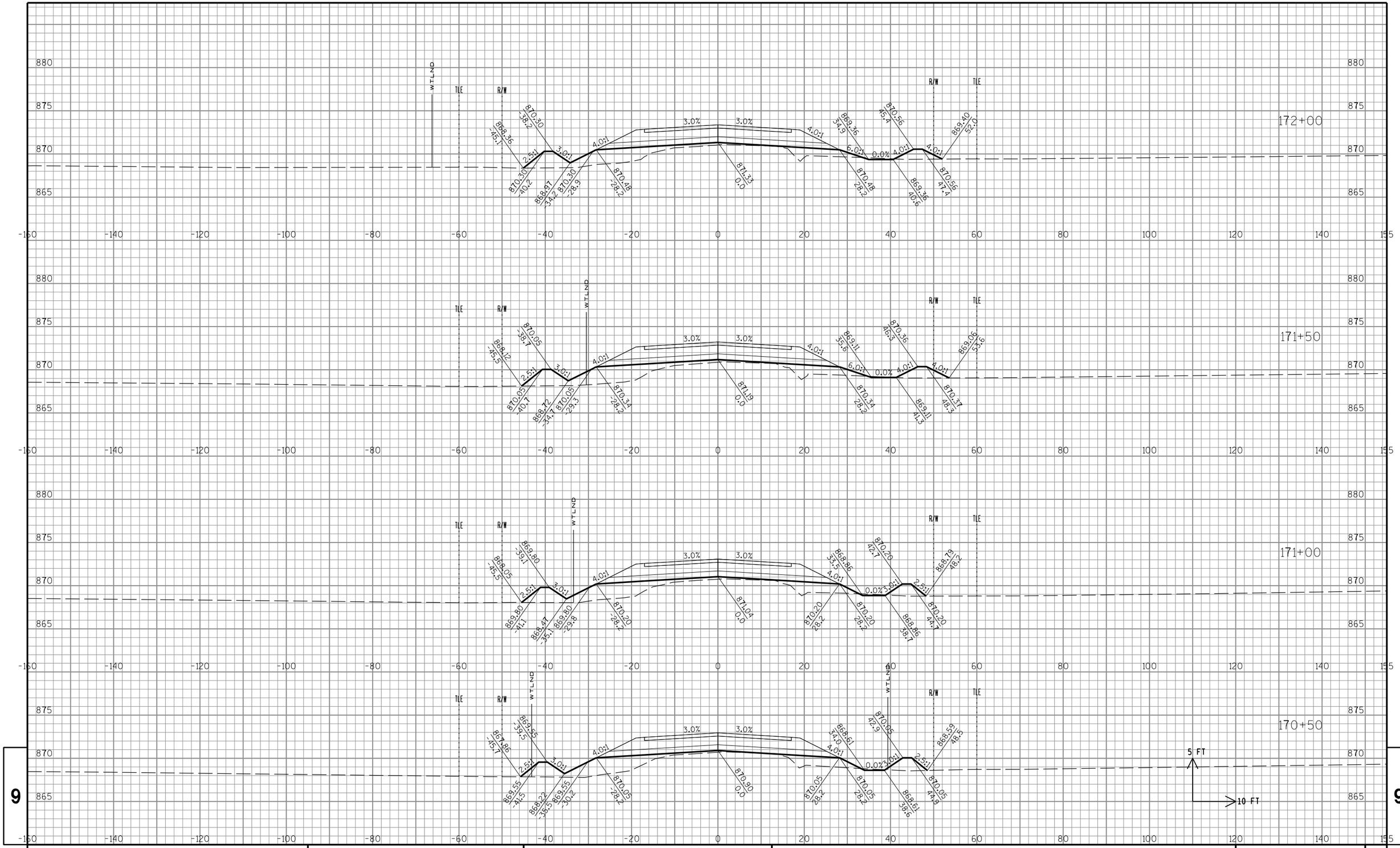

STATE PROJECT NO: 2722-10-70	HWY: COFFEE ROAD	COUNTY: WAUKESHA	CROSS SECTIONS: COFFEE RD	SHEET NO: . 240	E

FILE NAME : S:\Wauk_Co\NewBerlin\Gov\08.0099 Coffee Rd\Design\090201_XS_Coffee.dgn PLOT DATE : 10/30/2013 PLOT BY : Nick_B PLOT NAME : PLOT SCALE : 1:20

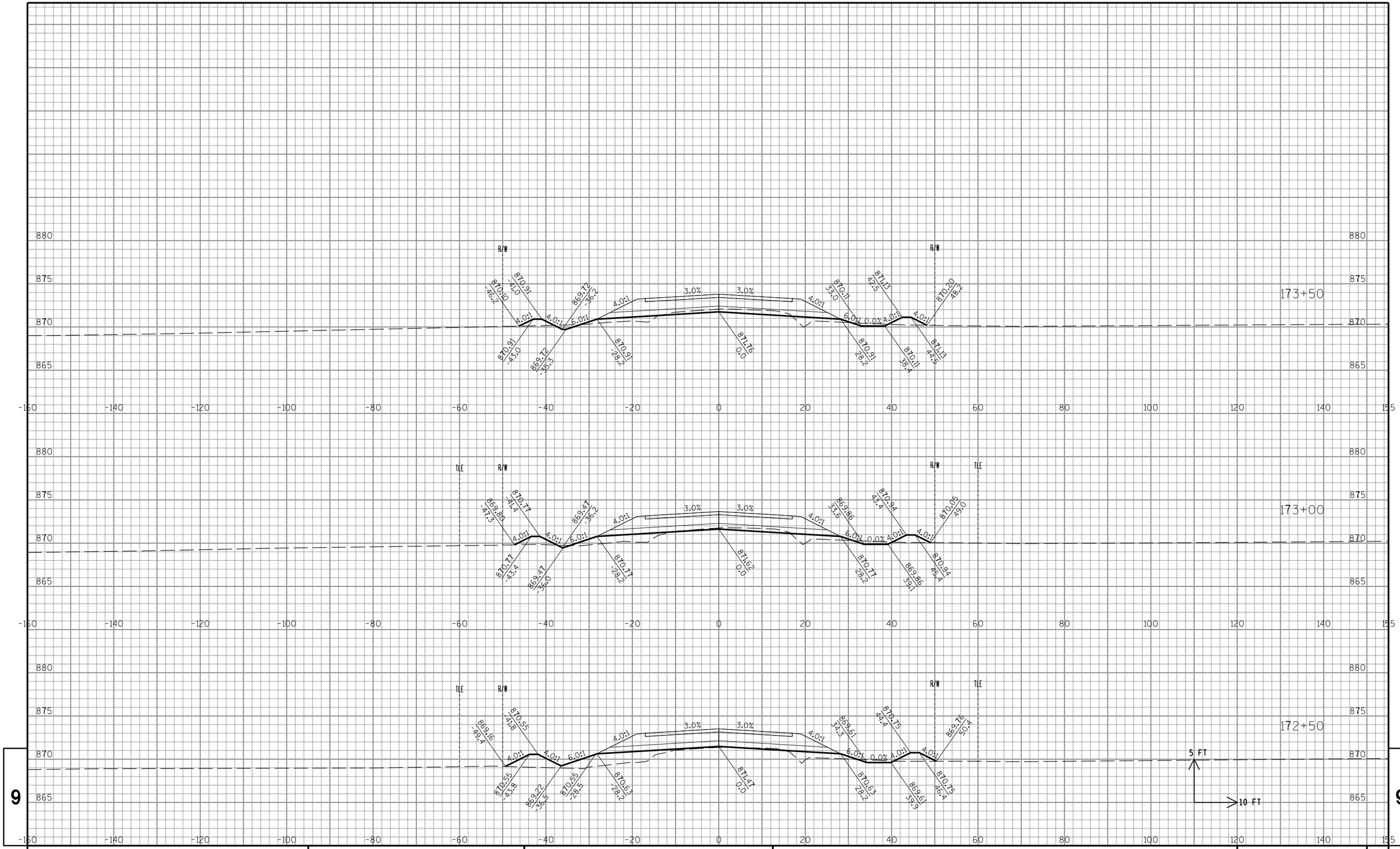

9

9

STATE PROJECT NO: 2722-10-70	HWY: COFFEE ROAD	COUNTY: WAUKESHA	CROSS SECTIONS: COFFEE RD	SHEET NO: . 241	E

FILE NAME : S:\Wauk_Co\NewBerlin\Gov\08.0099 Coffee Rd\Design\090201_XS_Coffee.dgn PLOT DATE : 10/30/2013 PLOT BY : Nick_B PLOT NAME : PLOT SCALE : 1:20

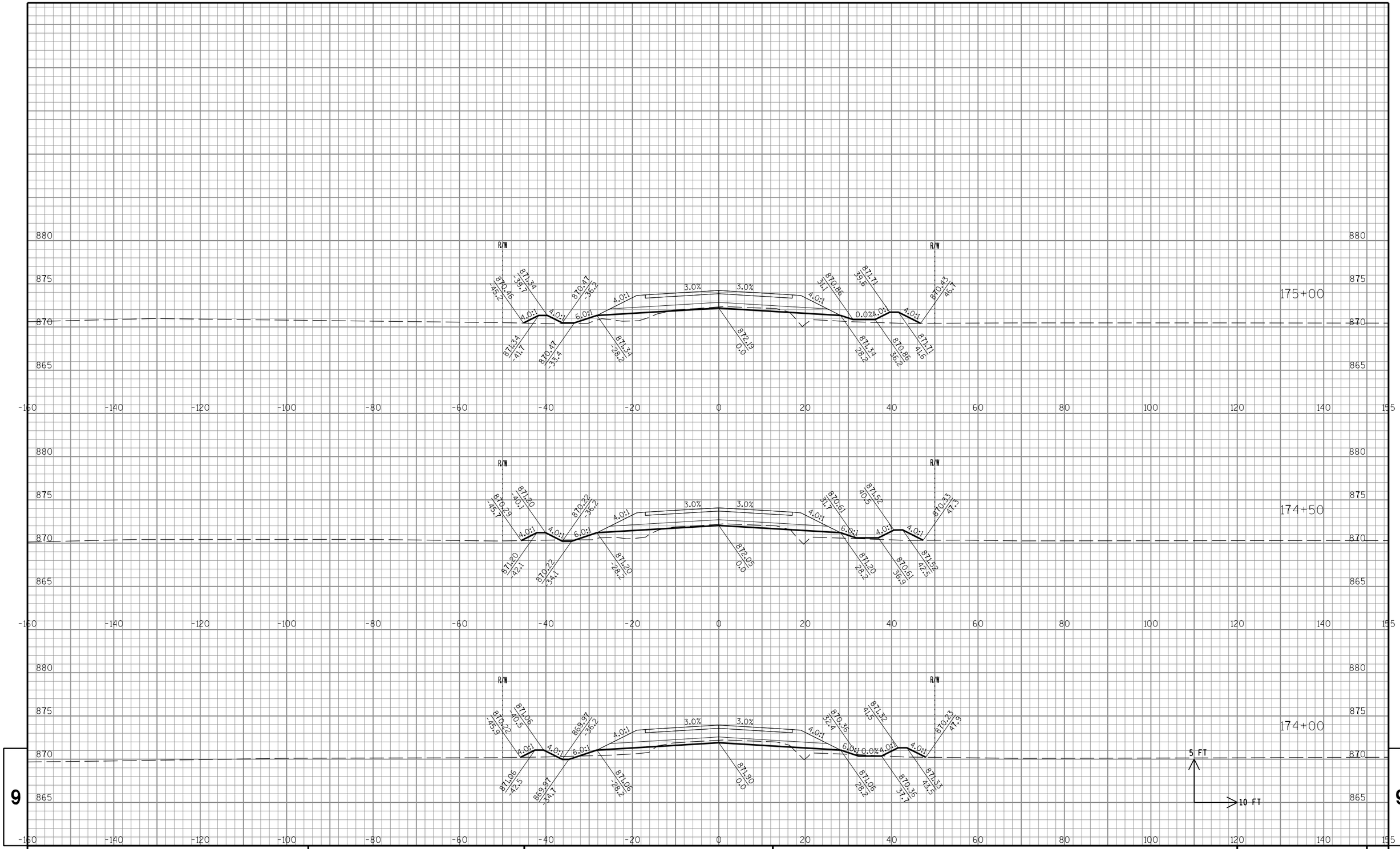

9

9

STATE PROJECT NO: 2722-10-70	HWY: COFFEE ROAD	COUNTY: WAUKESHA	CROSS SECTIONS: COFFEE RD	SHEET NO: . 242	E

FILE NAME : S:\Wauk_Co\NewBerlin\Gov\08.0099 Coffee Rd\Design\090201_XS_Coffee.dgn PLOT DATE : 10/30/2013 PLOT BY : Nick_B PLOT NAME : PLOT SCALE : 1:20

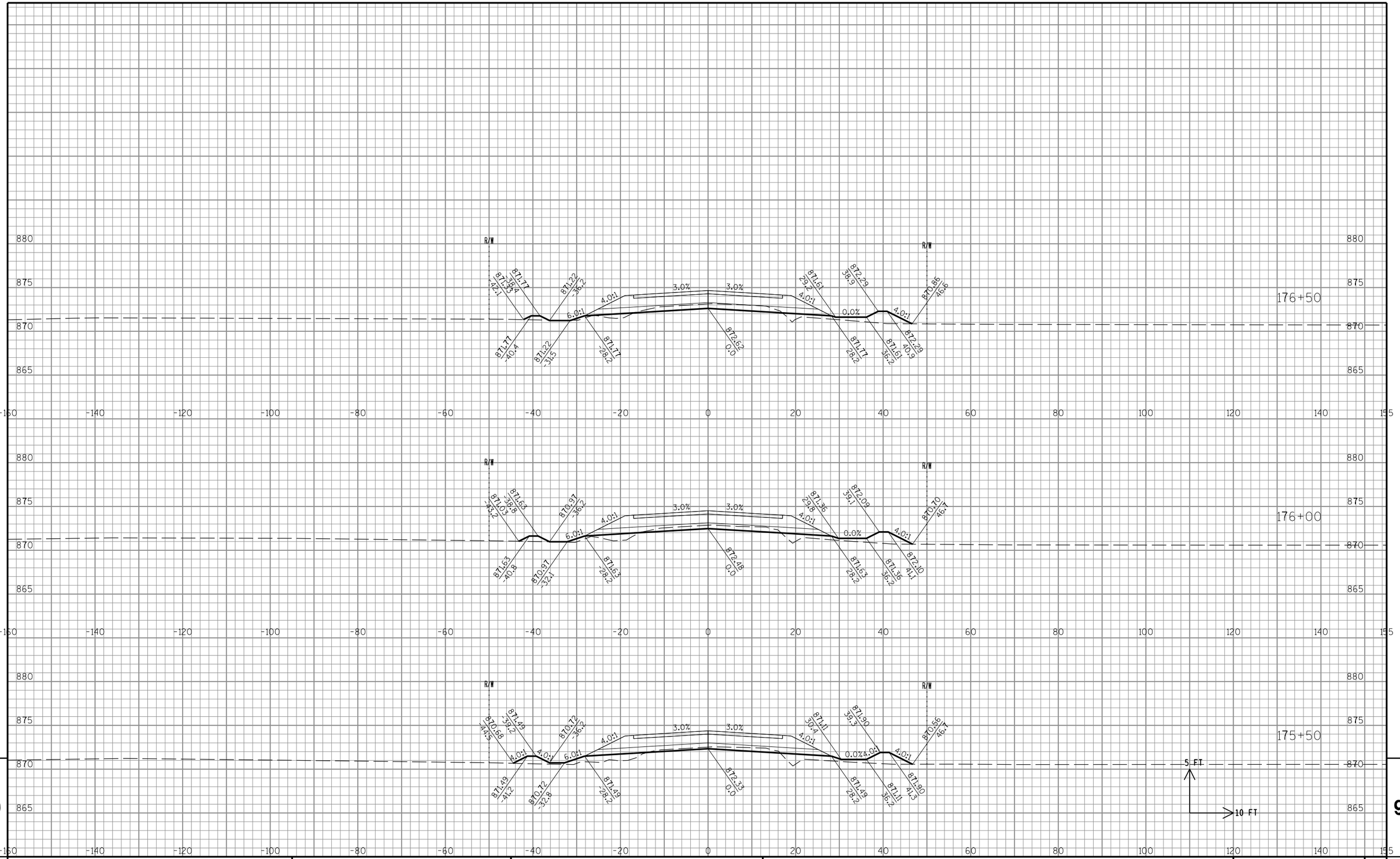

STATE PROJECT NO: 2722-10-70	HWY: COFFEE ROAD	COUNTY: WAUKESHA	CROSS SECTIONS: COFFEE RD	SHEET NO: 243	E

FILE NAME : S:\Wauk_Co\NewBerlin\Gov\08.0099 Coffee Rd\Design\090201_XS_Coffee.dgn PLOT DATE : 10/30/2013 PLOT BY : Nick_B PLOT NAME : PLOT SCALE : 1:20

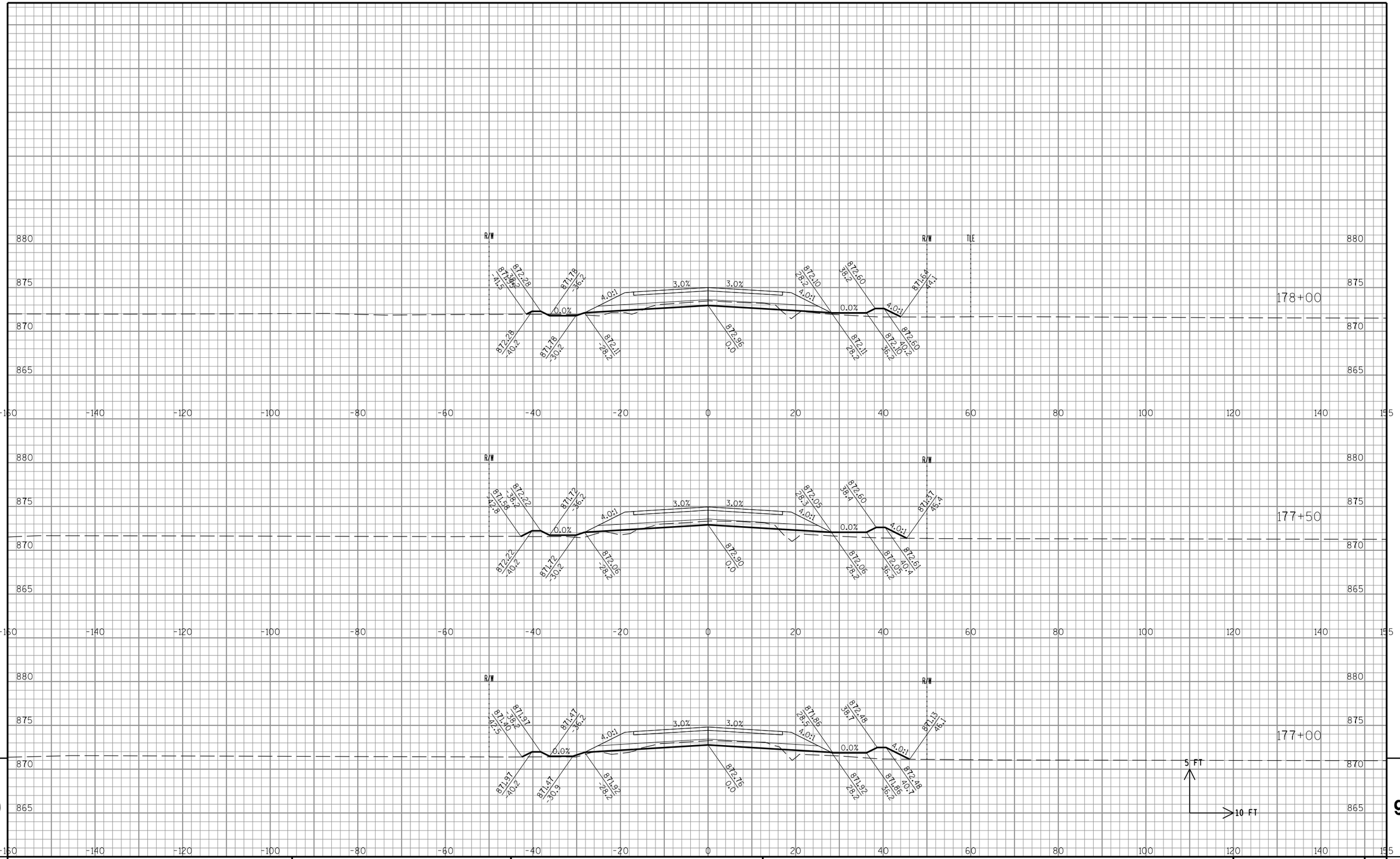

9

9

STATE PROJECT NO: 2722-10-70	HWY: COFFEE ROAD	COUNTY: WAUKESHA	CROSS SECTIONS: COFFEE RD	SHEET NO: . 244	E

FILE NAME : S:\Wauk_Co\NewBerlin\Gov\08.0099 Coffee Rd\Design\090201_XS_Coffee.dgn PLOT DATE : 10/30/2013 PLOT BY : Nick_B PLOT NAME : PLOT SCALE : 1:20

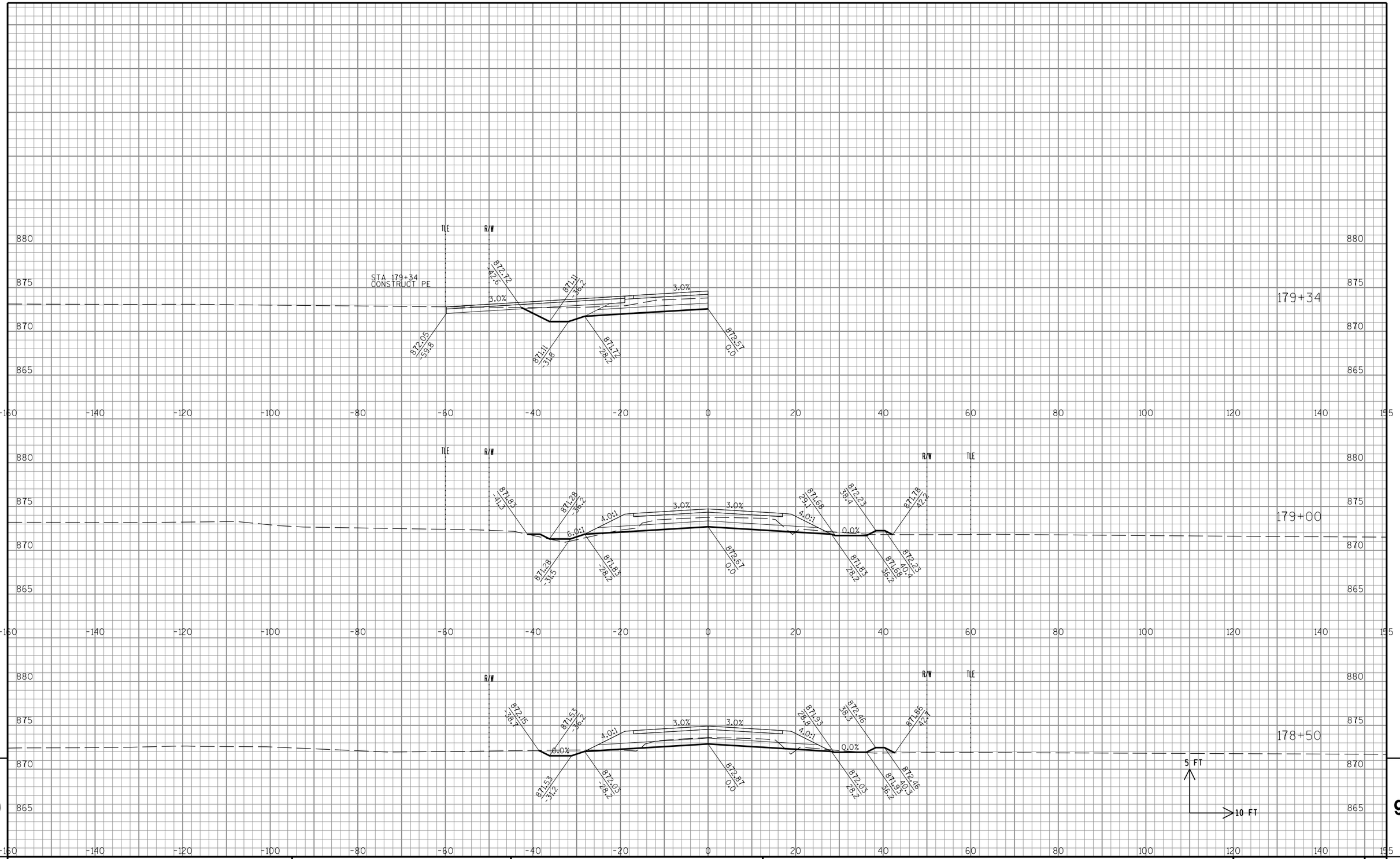

9

9

STATE PROJECT NO: 2722-10-70	HWY: COFFEE ROAD	COUNTY: WAUKESHA	CROSS SECTIONS: COFFEE RD	SHEET NO: 245	E

FILE NAME : S:\Wauk_Co\NewBerlin\Gov\08.0099 Coffee Rd\Design\090201_XS_Coffee.dgn PLOT DATE : 10/30/2013 PLOT BY : Nick_B PLOT NAME : PLOT SCALE : 1:20

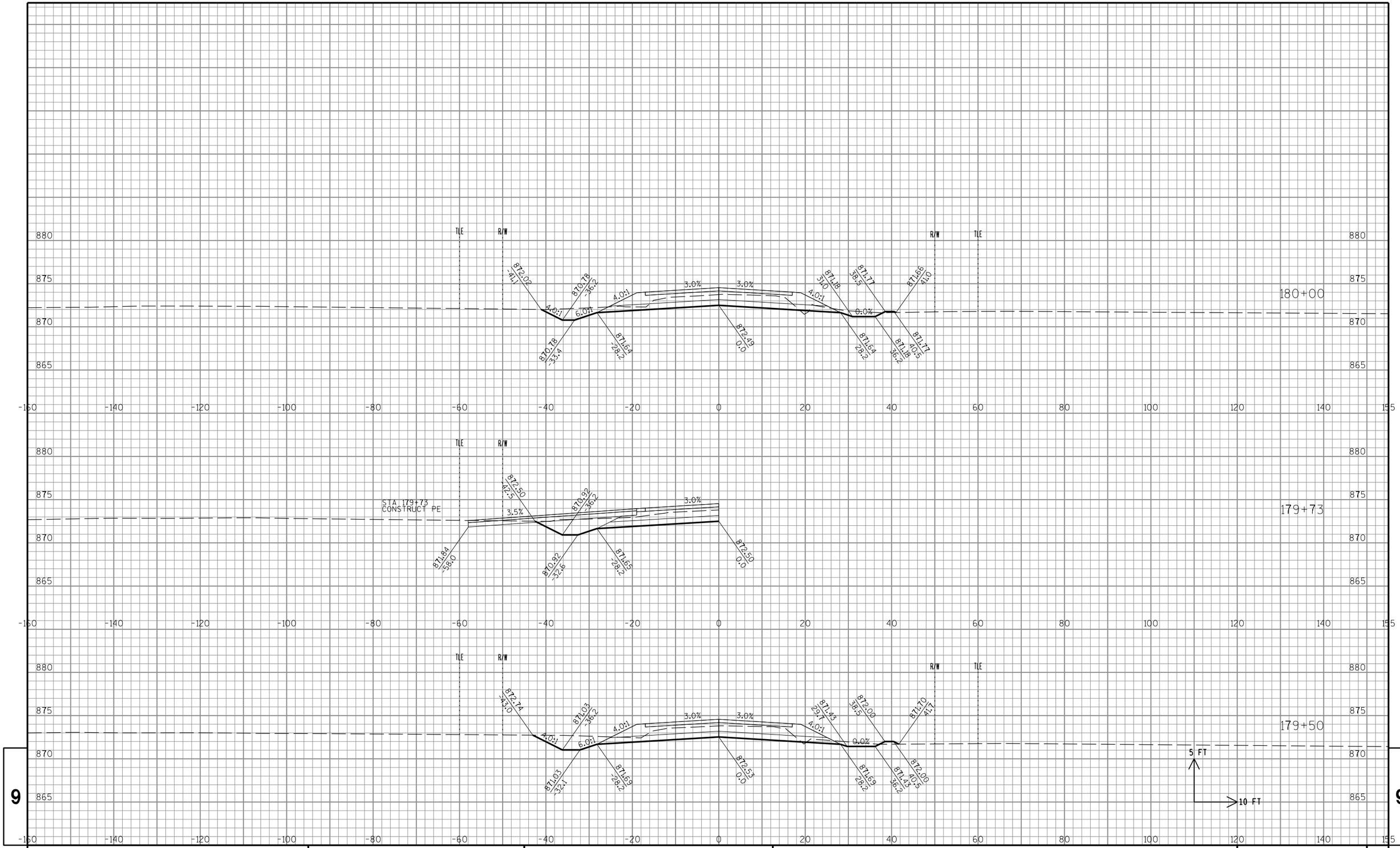

9

9

STATE PROJECT NO: 2722-10-70	HWY: COFFEE ROAD	COUNTY: WAUKESHA	CROSS SECTIONS: COFFEE RD	SHEET NO: . 246	E

FILE NAME : S:\Wauk_Co\NewBerlin\Gov\08.0099 Coffee Rd\Design\090201_XS_Coffee.dgn PLOT DATE : 10/30/2013 PLOT BY : Nick_B PLOT NAME : PLOT SCALE : 1:20

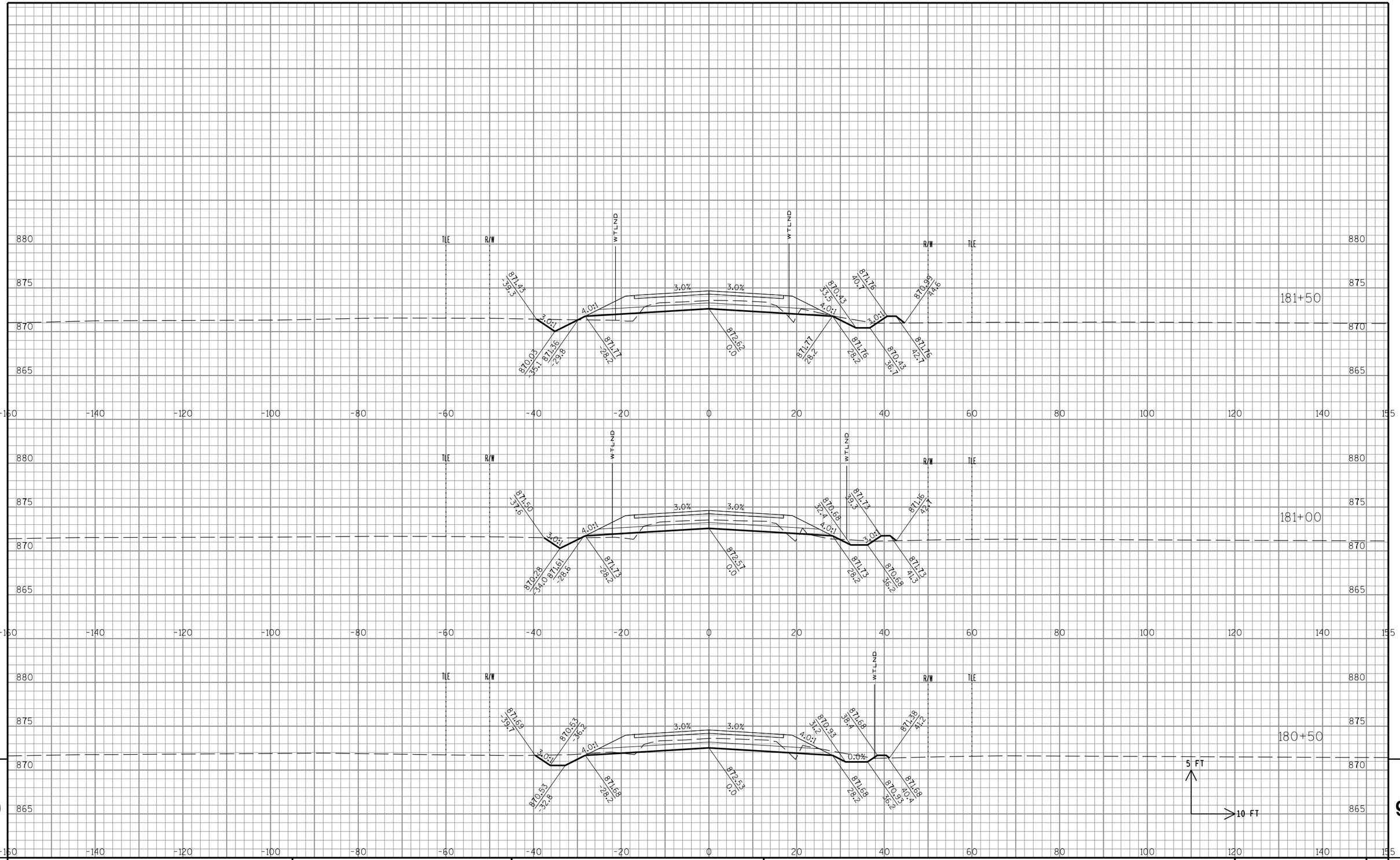

9

9

STATE PROJECT NO: 2722-10-70	HWY: COFFEE ROAD	COUNTY: WAUKESHA	CROSS SECTIONS: COFFEE RD	SHEET NO: . 247	E

FILE NAME : S:\Wauk_Co\NewBerlin\Gov\08.0099 Coffee Rd\Design\090201_XS_Coffee.dgn PLOT DATE : 10/30/2013 PLOT BY : Nick_B PLOT NAME : PLOT SCALE : 1:20

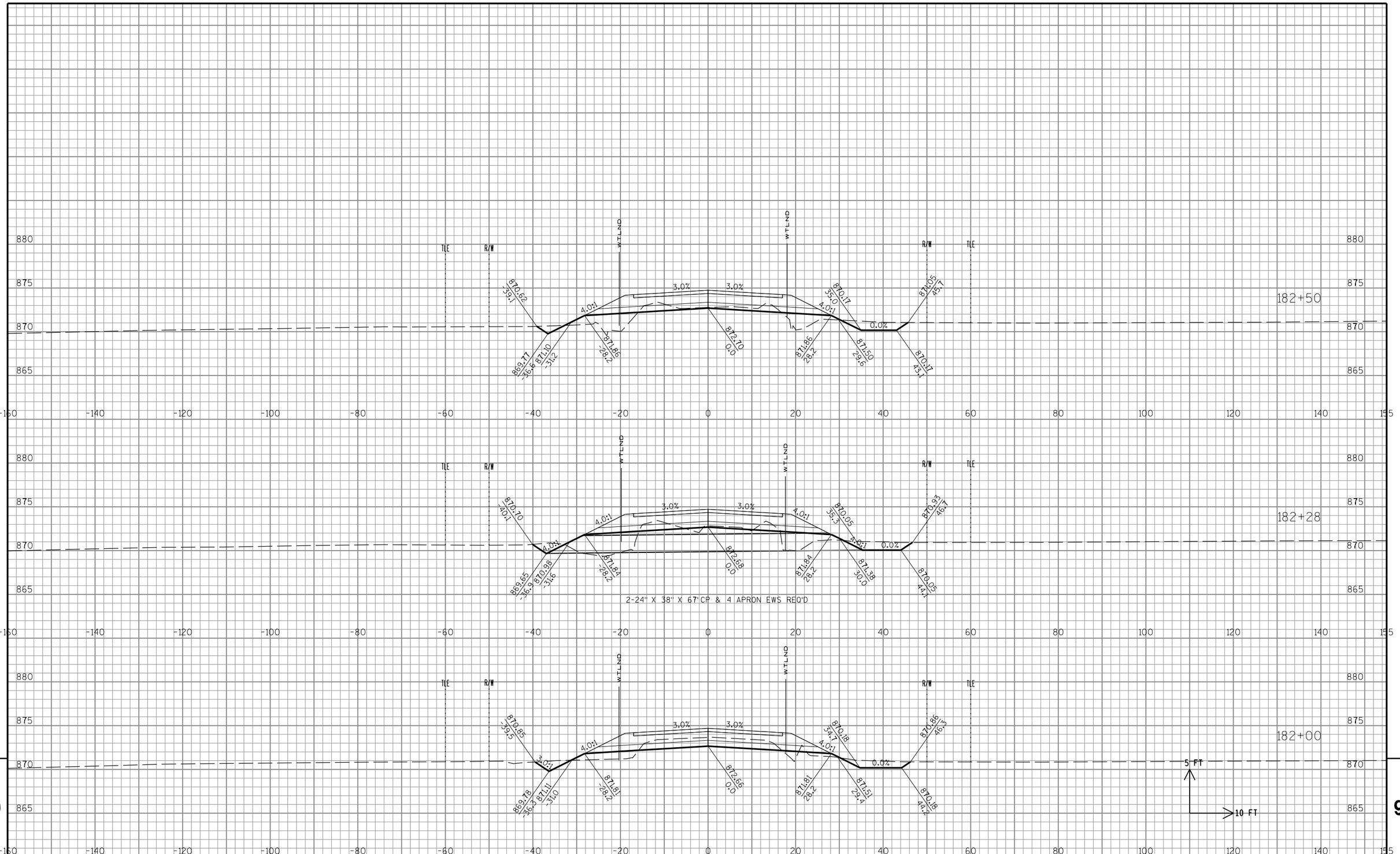

9

9

STATE PROJECT NO: 2722-10-70	HWY: COFFEE ROAD	COUNTY: WAUKESHA	CROSS SECTIONS: COFFEE RD	SHEET NO: . 248	E

FILE NAME : S:\Wauk_Co\NewBerlin\Gov\08.0099 Coffee Rd\Design\090201_XS_Coffee.dgn PLOT DATE : 10/30/2013 PLOT BY : Nick_B PLOT NAME : PLOT SCALE : 1:20

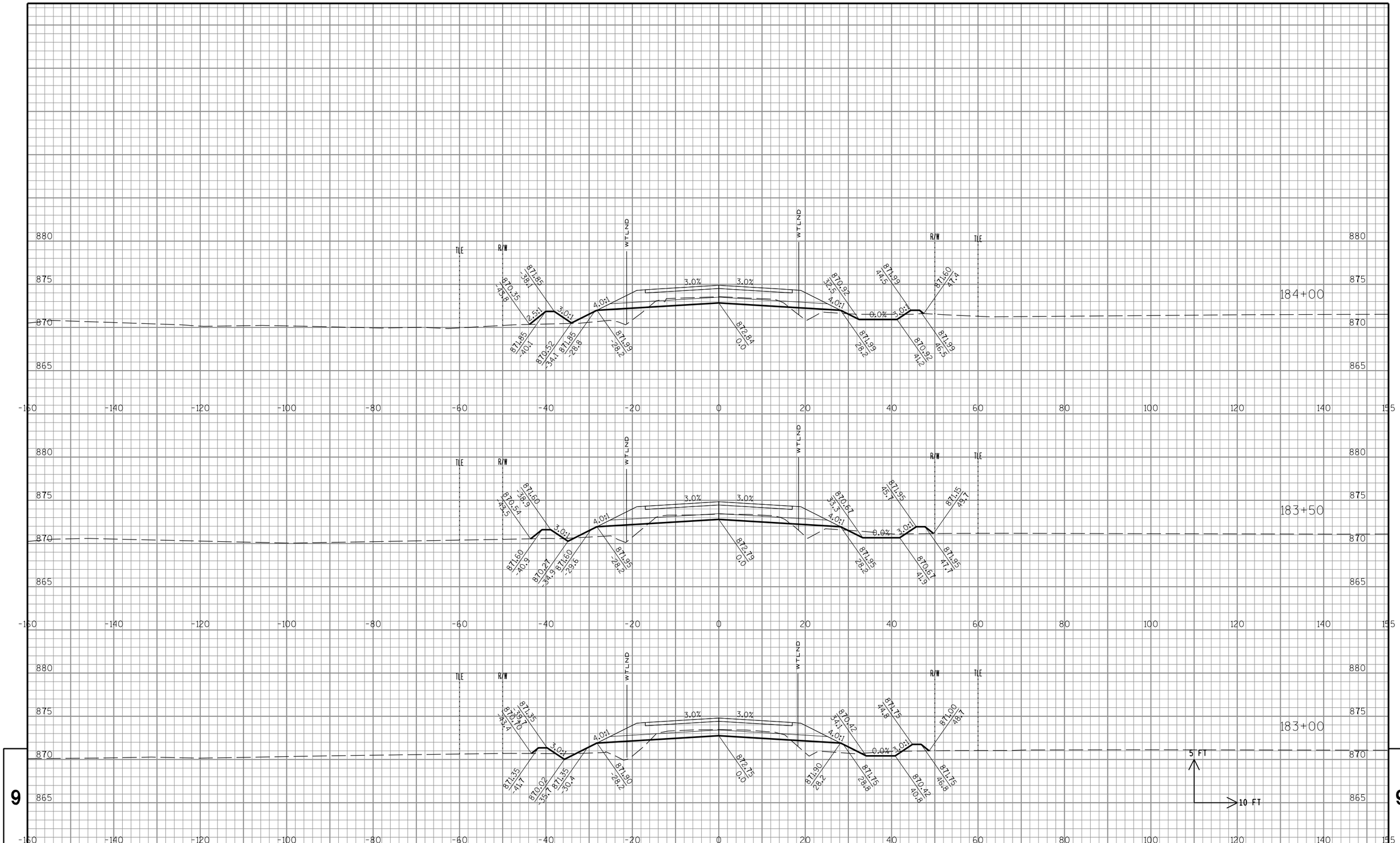

9

9

STATE PROJECT NO: 2722-10-70	HWY: COFFEE ROAD	COUNTY: WAUKESHA	CROSS SECTIONS: COFFEE RD	SHEET NO: . 249	E

FILE NAME : S:\Wauk_Co\NewBerlin\Gov\08.0099 Coffee Rd\Design\090201_XS_Coffee.dgn PLOT DATE : 10/30/2013 PLOT BY : Nick_B PLOT NAME : PLOT SCALE : 1:20

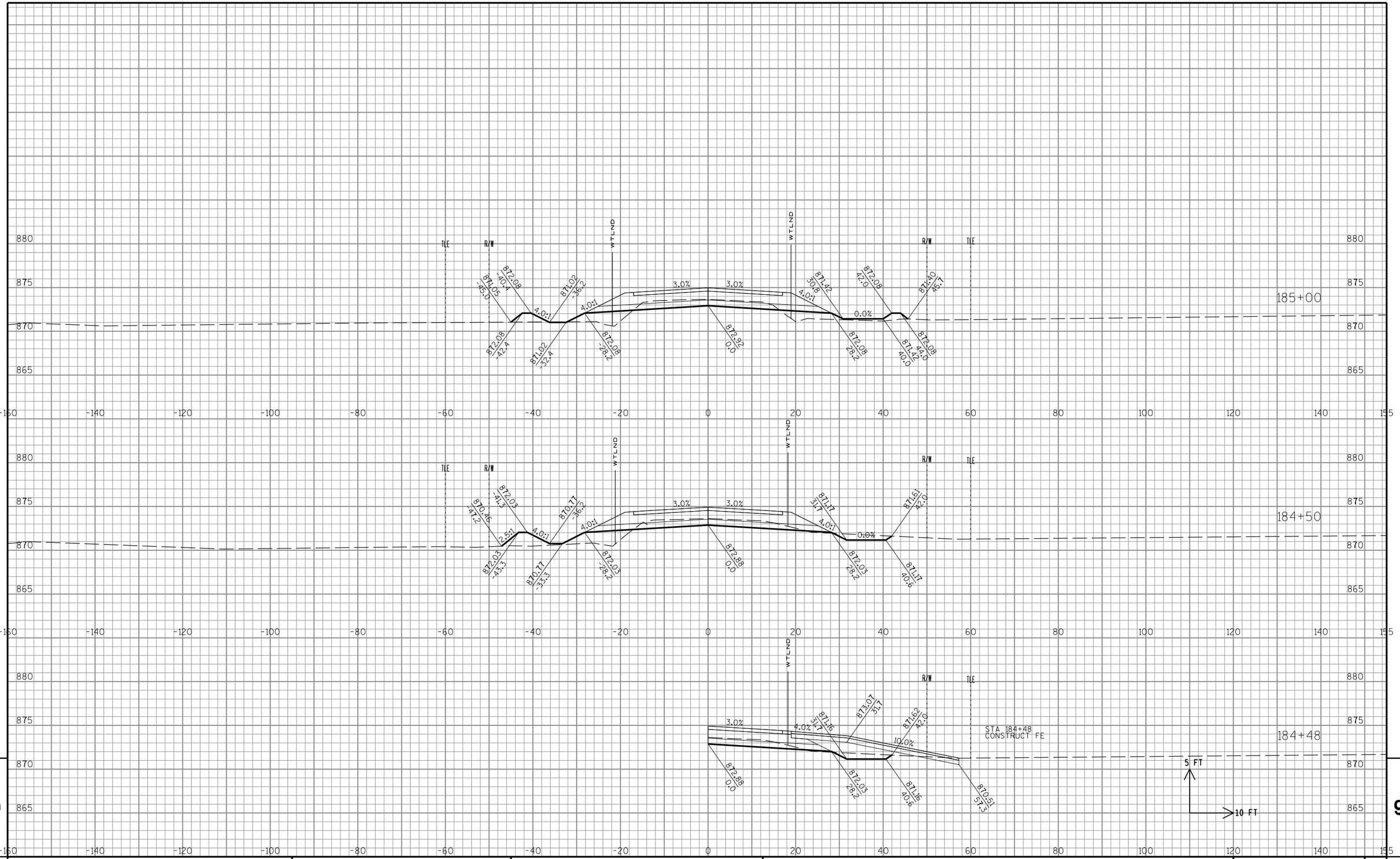

STATE PROJECT NO: 2722-10-70	HWY: COFFEE ROAD	COUNTY: WAUKESHA	CROSS SECTIONS: COFFEE RD	SHEET NO: 250	E

FILE NAME : S:\Wauk_Co\NewBerlin\Gov\08.0099 Coffee Rd\Design\090201_XS_Coffee.dgn PLOT DATE : 10/30/2013 PLOT BY : Nick_B PLOT NAME : PLOT SCALE : 1:20

9

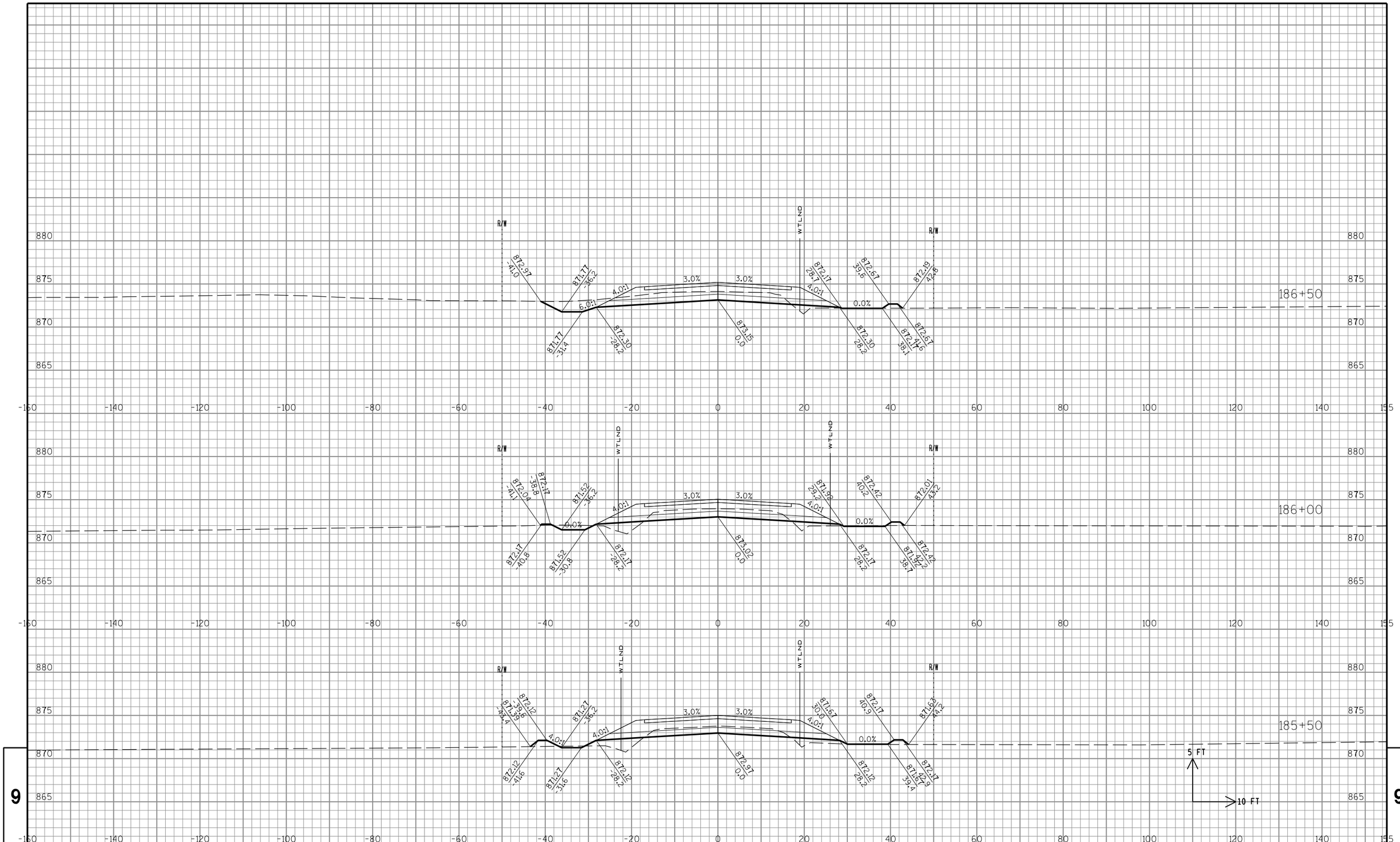

STATE PROJECT NO: 2722-10-70	HWY: COFFEE ROAD	COUNTY: WAUKESHA	CROSS SECTIONS: COFFEE RD	SHEET NO: . 251	E

FILE NAME : S:\Wauk_Co\NewBerlin\Gov\08.0099 Coffee Rd\Design\090201_XS_Coffee.dgn PLOT DATE : 10/30/2013 PLOT BY : Nick_B PLOT NAME : PLOT SCALE : 1:20

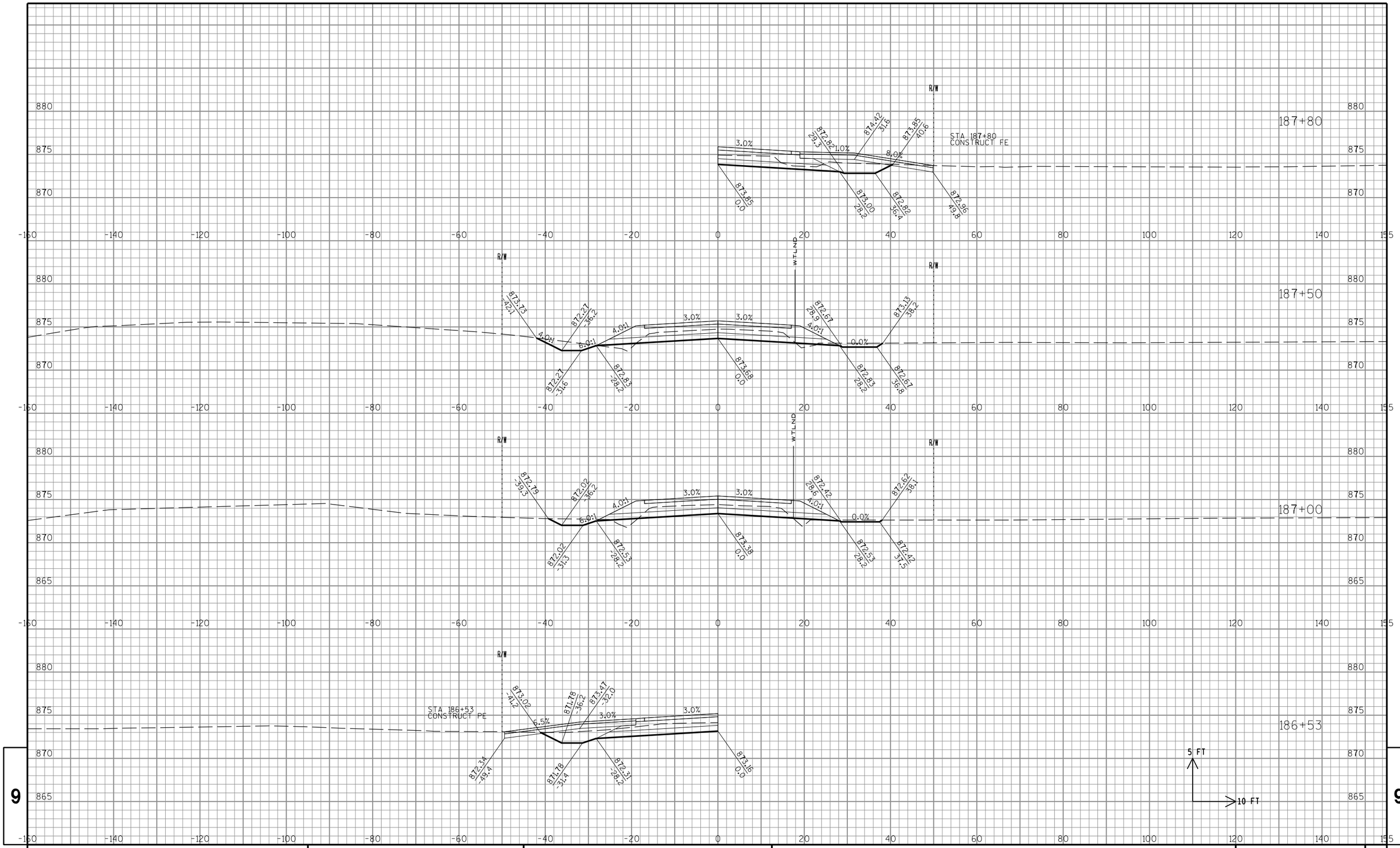

9

9

STATE PROJECT NO: 2722-10-70	HWY: COFFEE ROAD	COUNTY: WAUKESHA	CROSS SECTIONS: COFFEE RD	SHEET NO: . 252	E

FILE NAME : S:\Wauk_Co\NewBerlin\Gov\08.0099 Coffee Rd\Design\090201_XS_Coffee.dgn PLOT DATE : 10/30/2013 PLOT BY : Nick_B PLOT NAME : PLOT SCALE : 1:20

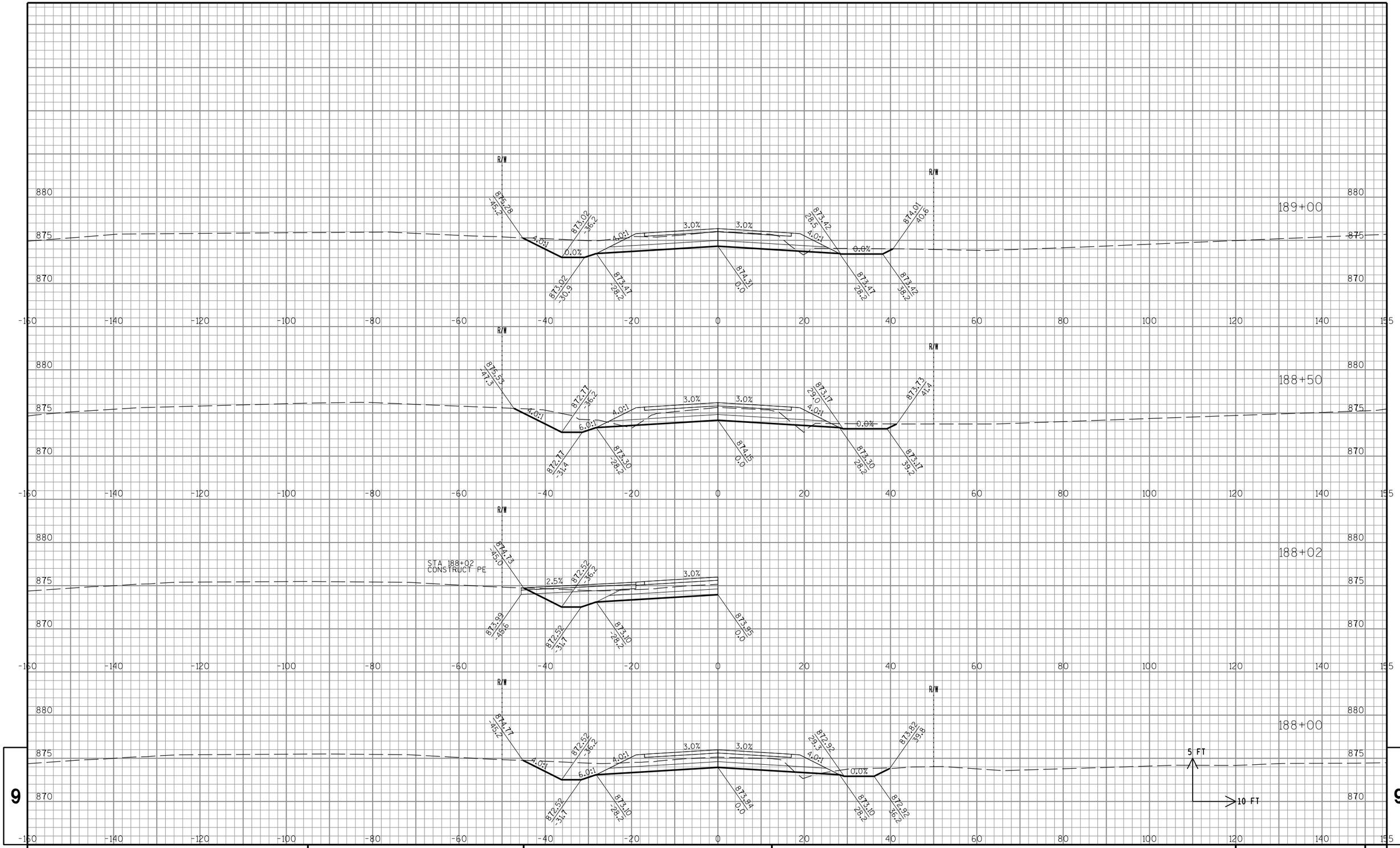

STATE PROJECT NO: 2722-10-70	HWY: COFFEE ROAD	COUNTY: WAUKESHA	CROSS SECTIONS: COFFEE RD	SHEET NO: . 253	E

FILE NAME : S:\Wauk_Co\NewBerlin\Gov\08.0099 Coffee Rd\Design\090201_XS_Coffee.dgn PLOT DATE : 10/30/2013 PLOT BY : Nick_B PLOT NAME : PLOT SCALE : 1:20

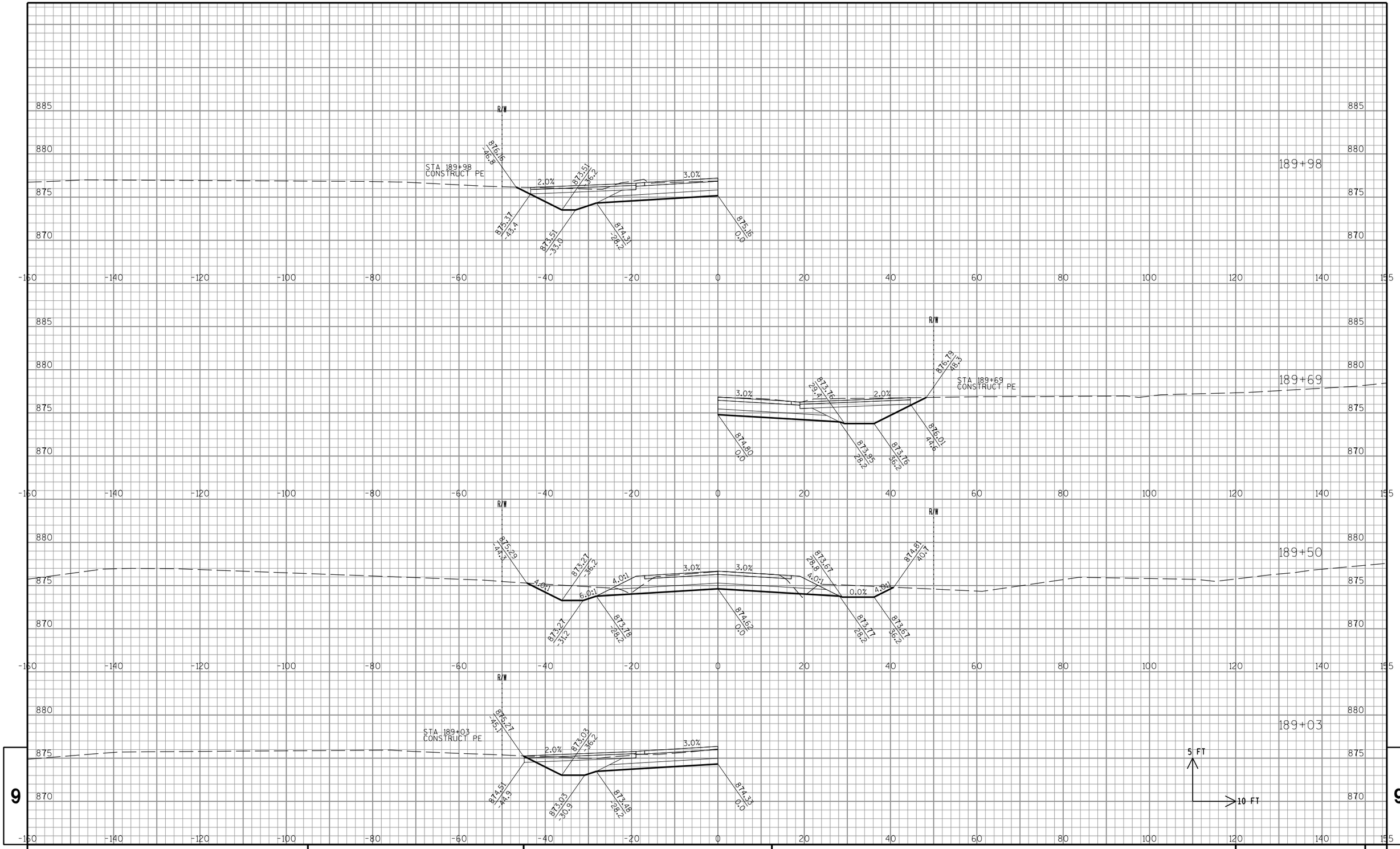

STATE PROJECT NO: 2722-10-70	HWY: COFFEE ROAD	COUNTY: WAUKESHA	CROSS SECTIONS: COFFEE RD	SHEET NO: . 254	E

FILE NAME : S:\Wauk_Co\NewBerlin\Gov\08.0099 Coffee Rd\Design\090201_XS_Coffee.dgn PLOT DATE : 10/30/2013 PLOT BY : Nick_B PLOT NAME : PLOT SCALE : 1:20

9 9

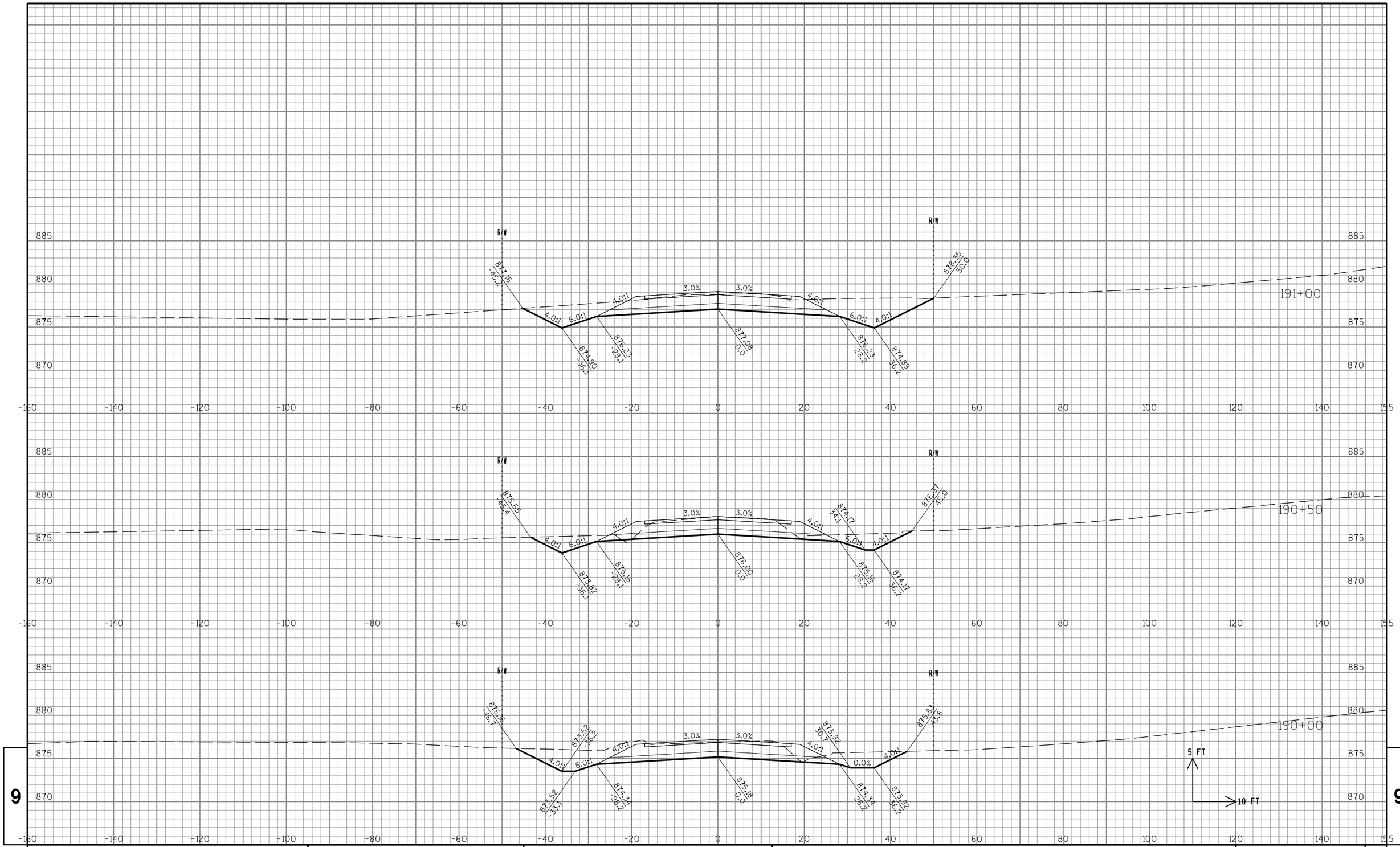

9

9

STATE PROJECT NO: 2722-10-70	HWY: COFFEE ROAD	COUNTY: WAUKESHA	CROSS SECTIONS: COFFEE RD	SHEET NO: . 255	E

FILE NAME : S:\Wauk_Co\NewBerlin\Gov\08.0099 Coffee Rd\Design\090201_XS_Coffee.dgn PLOT DATE : 10/30/2013 PLOT BY : Nick_B PLOT NAME : PLOT SCALE : 1:20

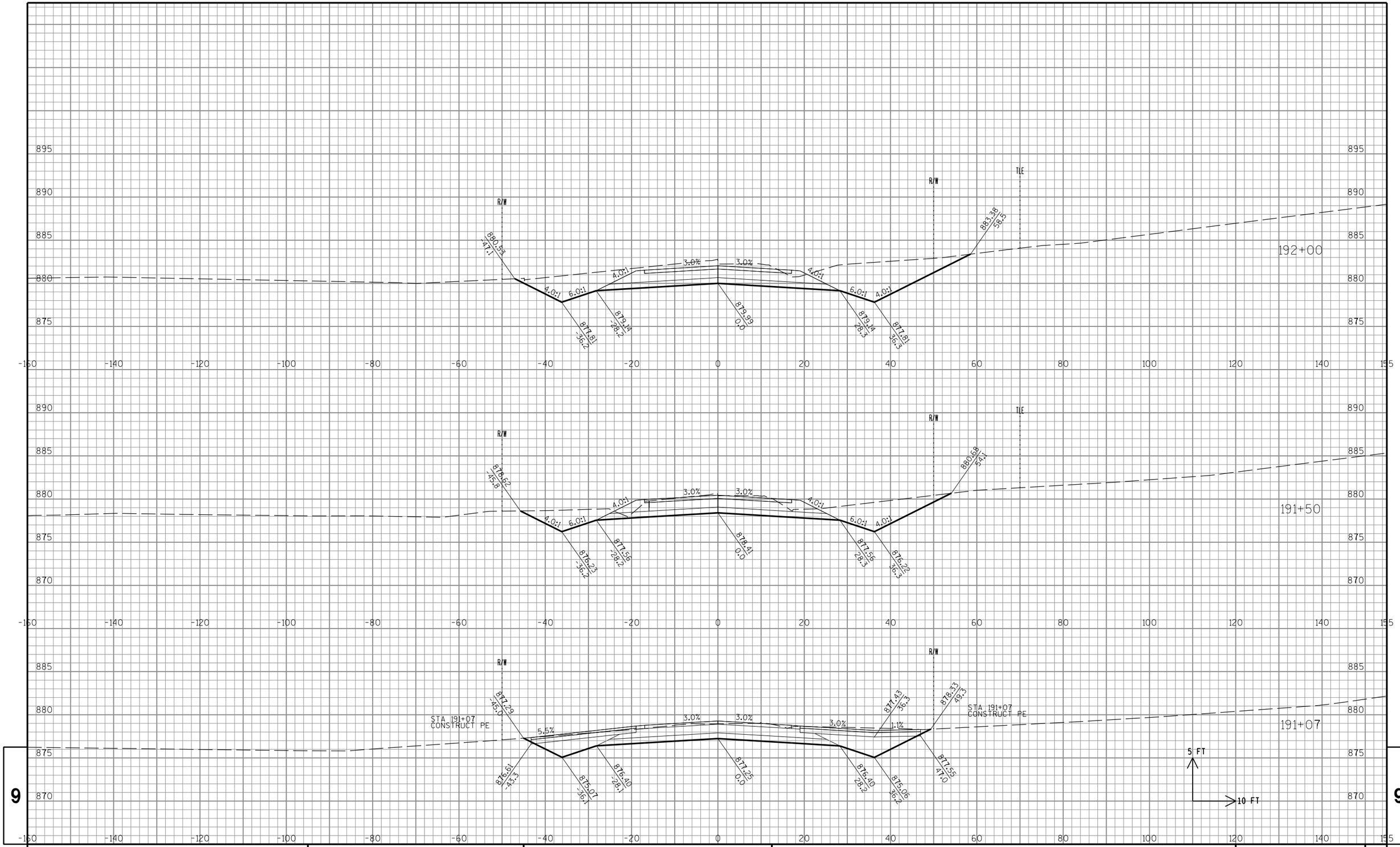

STATE PROJECT NO: 2722-10-70	HWY: COFFEE ROAD	COUNTY: WAUKESHA	CROSS SECTIONS: COFFEE RD	SHEET NO: . 256	E

FILE NAME : S:\Wauk_Co\NewBerlin\Gov\08.0099 Coffee Rd\Design\090201_XS_Coffee.dgn PLOT DATE : 10/30/2013 PLOT BY : Nick_B PLOT NAME : PLOT SCALE : 1:20

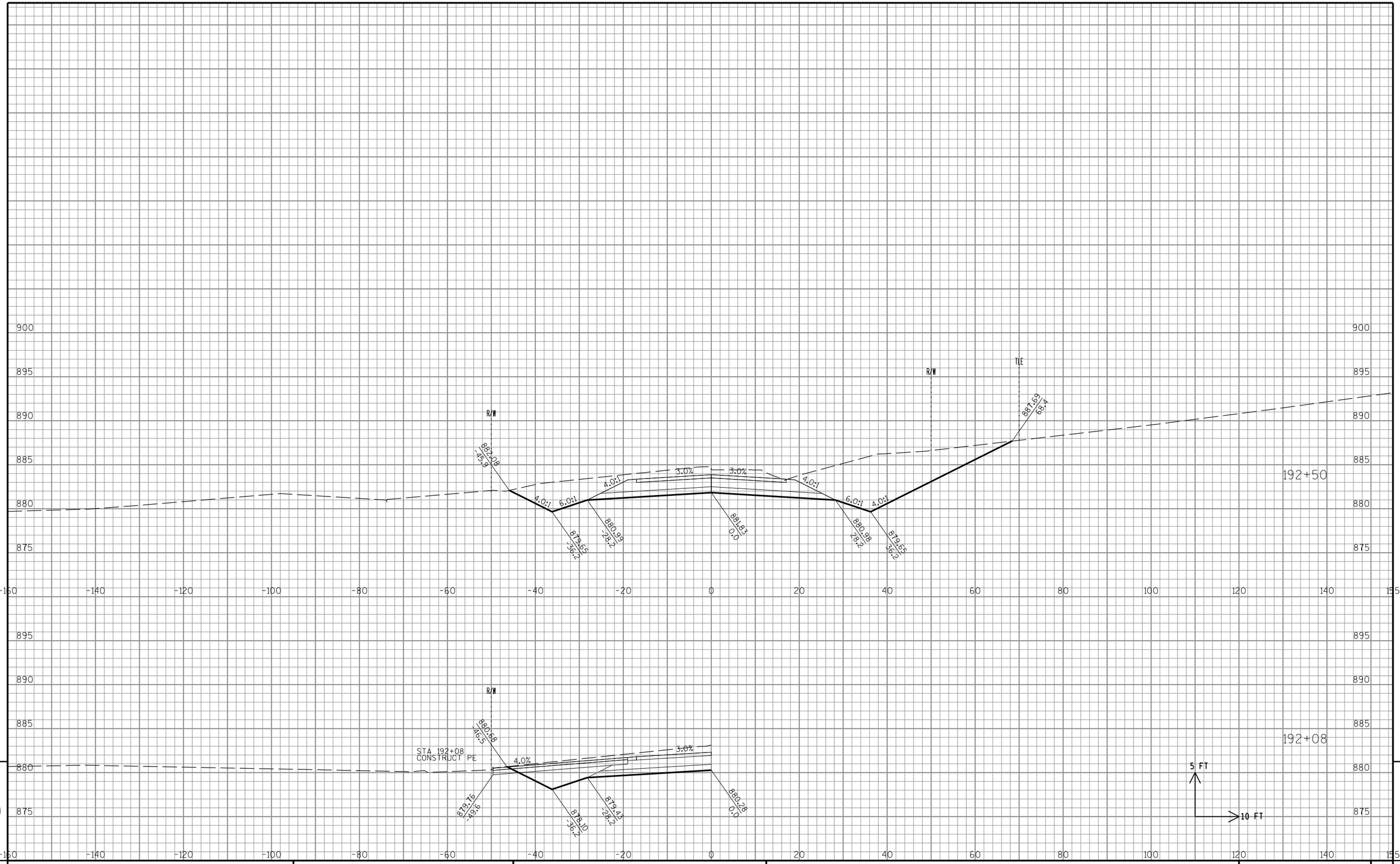

9

9

STATE PROJECT NO: 2722-10-70	HWY: COFFEE ROAD	COUNTY: WAUKESHA	CROSS SECTIONS: COFFEE RD	SHEET NO: . 257	E

FILE NAME : S:\Wauk_Co\NewBerlin\Gov\08.0099 Coffee Rd\Design\090201_XS_Coffee.dgn PLOT DATE : 10/30/2013 PLOT BY : Nick_B PLOT NAME : PLOT SCALE : 1:20

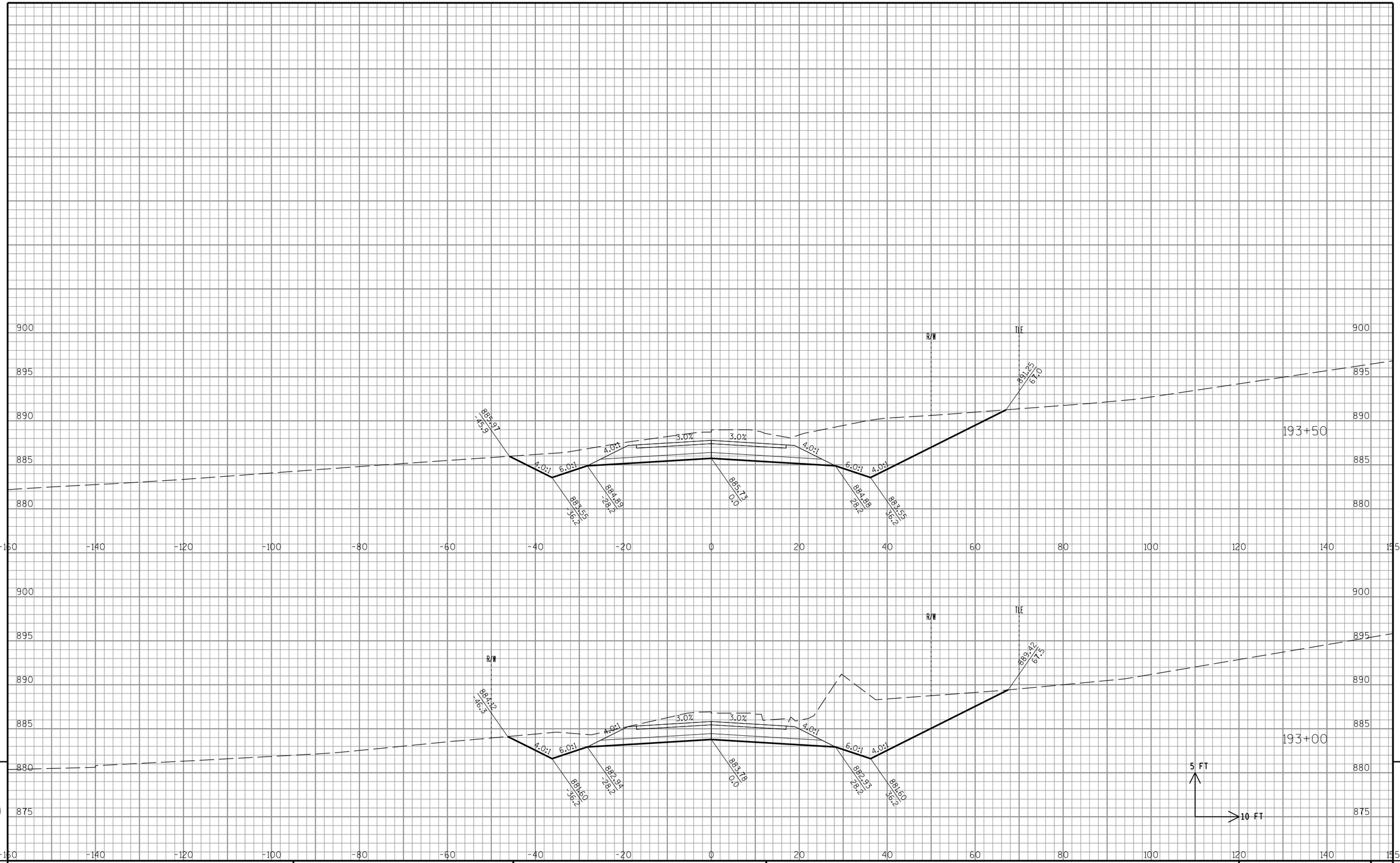

9

9

STATE PROJECT NO: 2722-10-70	HWY: COFFEE ROAD	COUNTY: WAUKESHA	CROSS SECTIONS: COFFEE RD	SHEET NO: . 258	E

FILE NAME : S:\Wauk_Co\NewBerlin\Gov\08.0099 Coffee Rd\Design\090201_XS_Coffee.dgn PLOT DATE : 10/30/2013 PLOT BY : Nick_B PLOT NAME : PLOT SCALE : 1:20

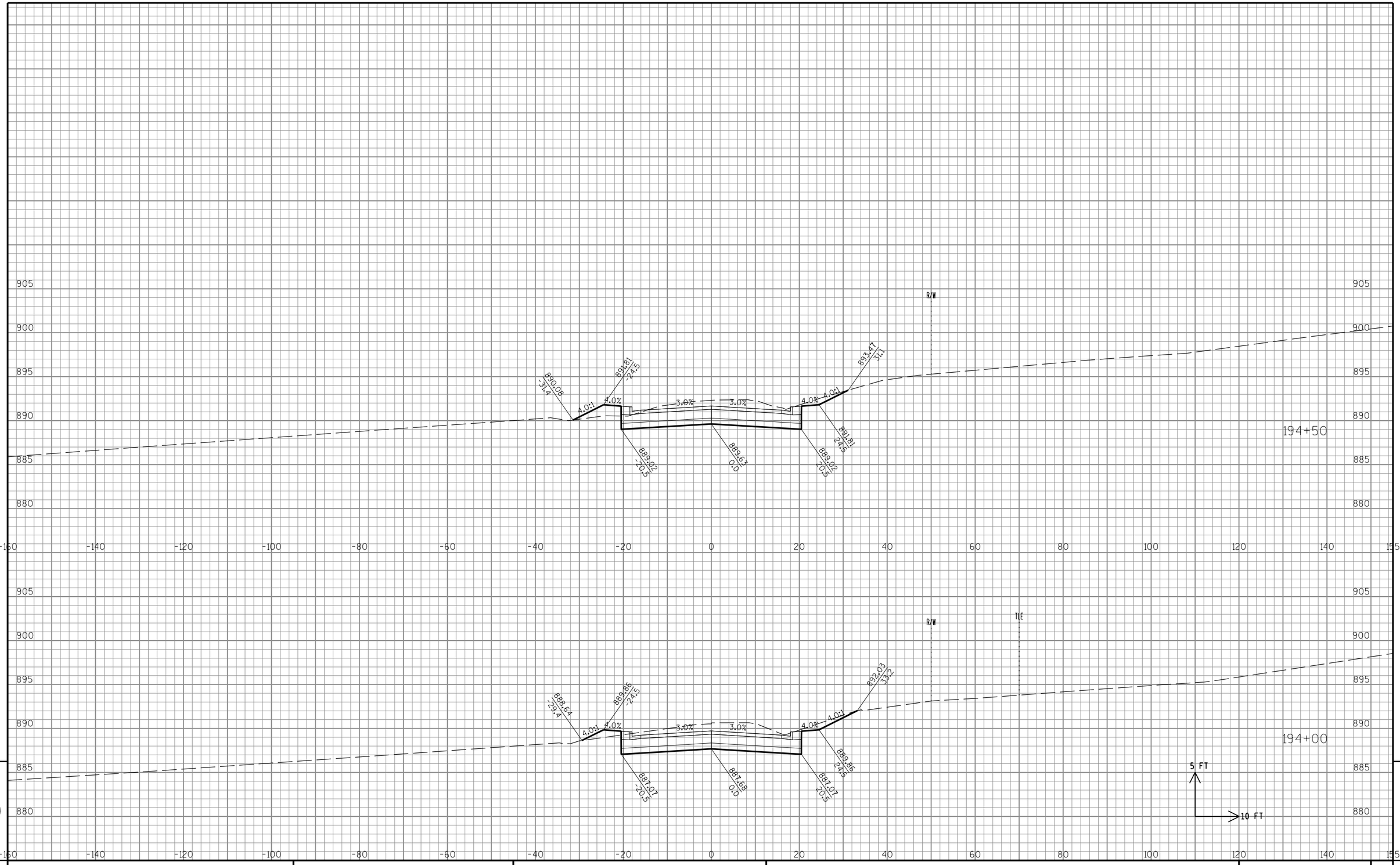

STATE PROJECT NO: 2722-10-70	HWY: COFFEE ROAD	COUNTY: WAUKESHA	CROSS SECTIONS: COFFEE RD	SHEET NO: . 259	E

FILE NAME : S:\Wauk_Co\NewBerlin\Gov\08.0099 Coffee Rd\Design\090201_XS_Coffee.dgn PLOT DATE : 10/30/2013 PLOT BY : Nick_B PLOT NAME : PLOT SCALE : 1:20

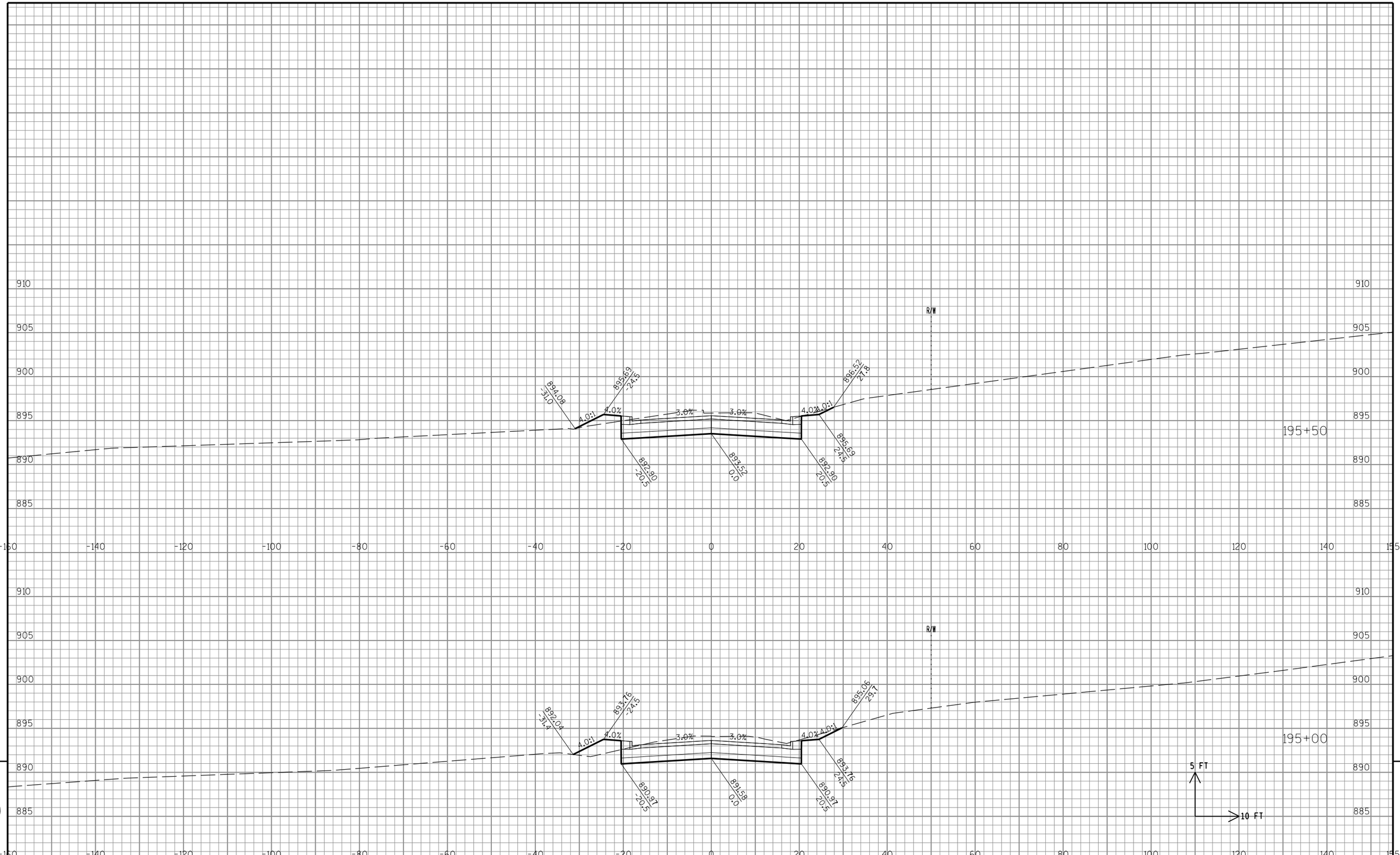

STATE PROJECT NO: 2722-10-70	HWY: COFFEE ROAD	COUNTY: WAUKESHA	CROSS SECTIONS: COFFEE RD	SHEET NO: . 260	E

FILE NAME : S:\Wauk_Co\NewBerlin\Gov\08.0099 Coffee Rd\Design\090201_XS_Coffee.dgn PLOT DATE : 10/30/2013 PLOT BY : Nick_B PLOT NAME : PLOT SCALE : 1:20

9 9

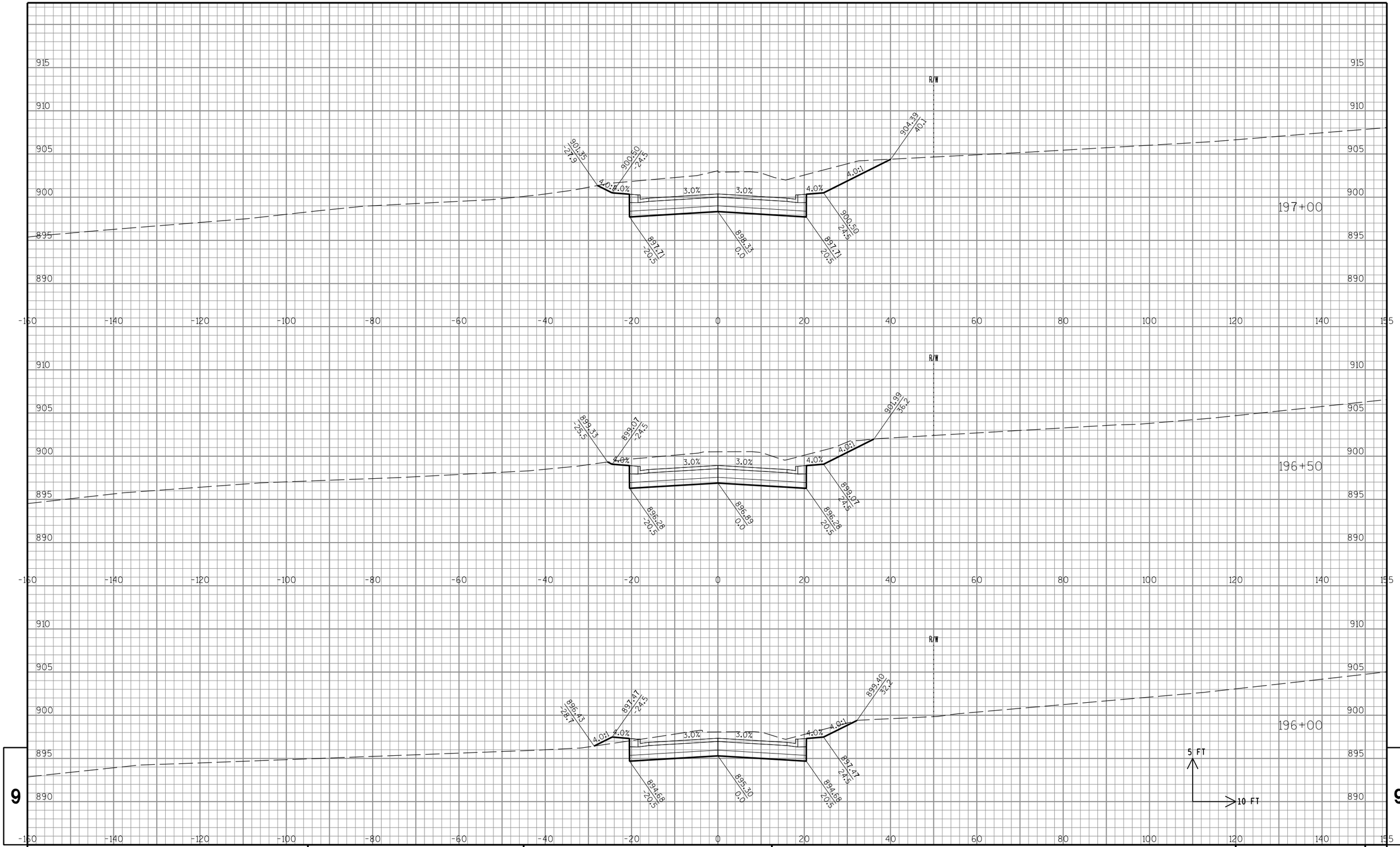

9

9

STATE PROJECT NO: 2722-10-70	HWY: COFFEE ROAD	COUNTY: WAUKESHA	CROSS SECTIONS: COFFEE RD	SHEET NO: . 261	E

FILE NAME : S:\Wauk_Co\NewBerlin\Gov\08.0099 Coffee Rd\Design\090201_XS_Coffee.dgn PLOT DATE : 10/30/2013 PLOT BY : Nick_B PLOT NAME : PLOT SCALE : 1:20

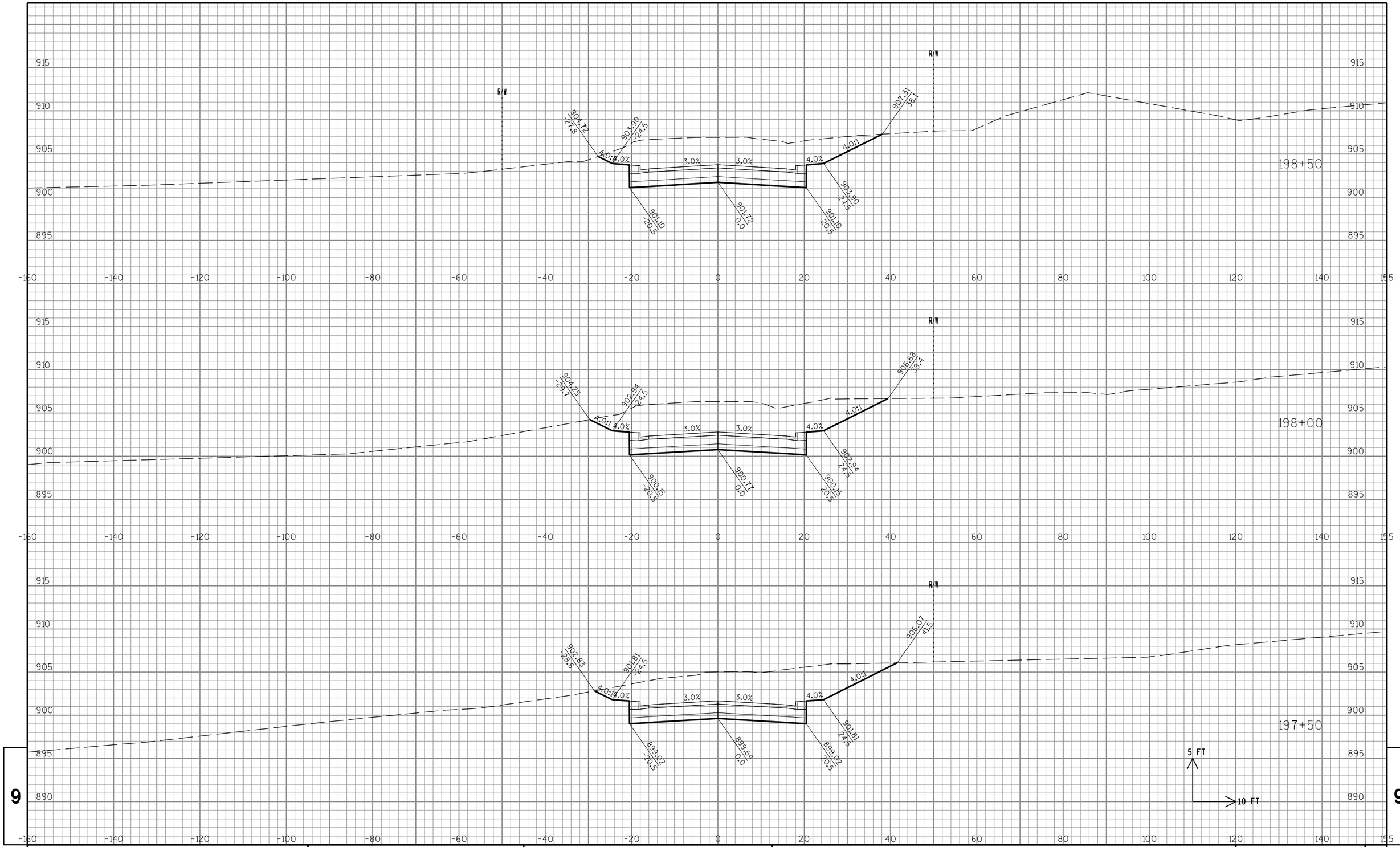

9

9

STATE PROJECT NO: 2722-10-70	HWY: COFFEE ROAD	COUNTY: WAUKESHA	CROSS SECTIONS: COFFEE RD	SHEET NO: . 262	E

FILE NAME : S:\Wauk_Co\NewBerlin\Gov\08.0099 Coffee Rd\Design\090201_XS_Coffee.dgn PLOT DATE : 10/30/2013 PLOT BY : Nick_B PLOT NAME : PLOT SCALE : 1:20

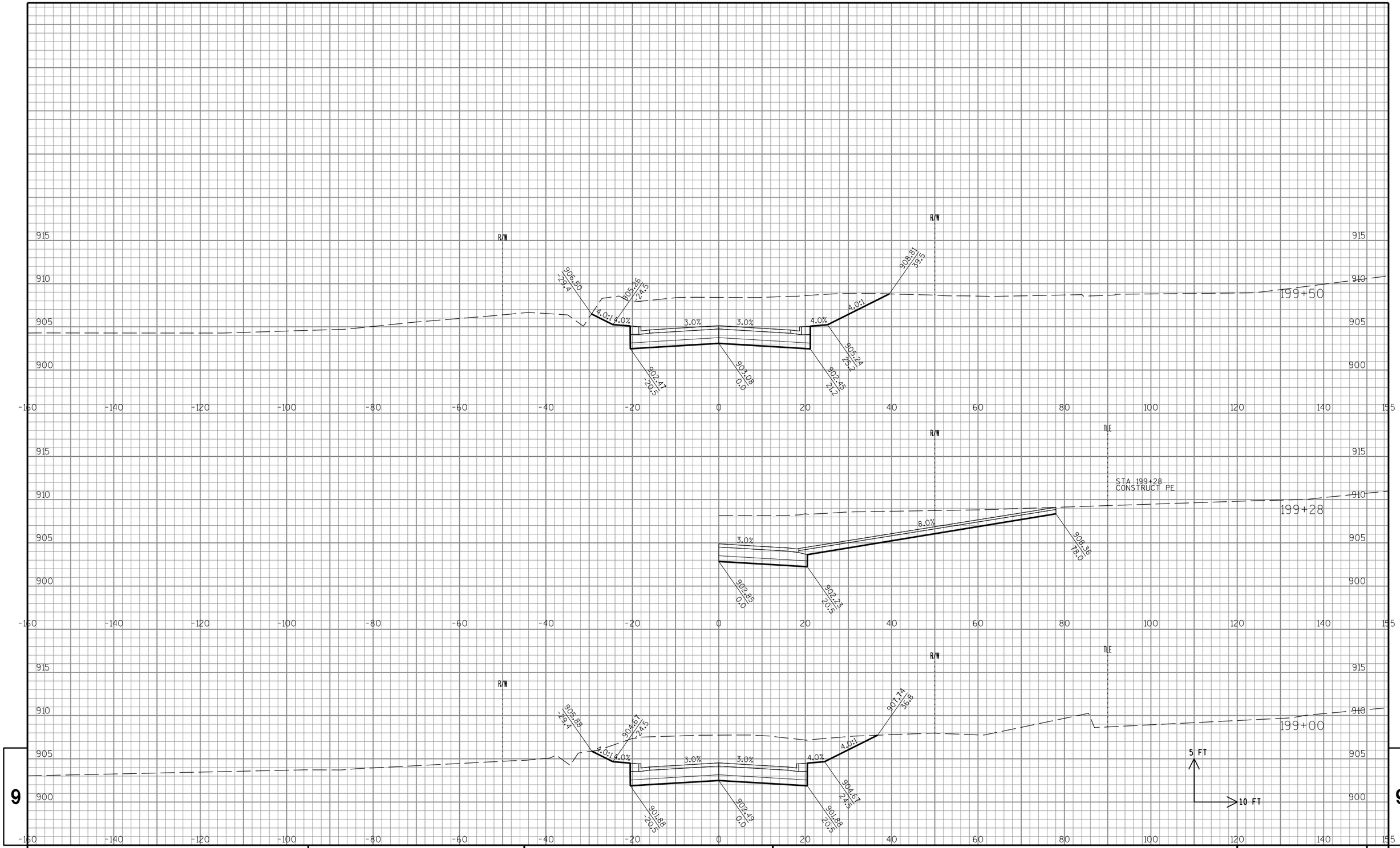

9

STATE PROJECT NO: 2722-10-70	HWY: COFFEE ROAD	COUNTY: WAUKESHA	CROSS SECTIONS: COFFEE RD	SHEET NO: . 263	E

FILE NAME : S:\Wauk_Co\NewBerlin\Gov\08.0099 Coffee Rd\Design\090201_XS_Coffee.dgn PLOT DATE : 10/30/2013 PLOT BY : Nick_B PLOT NAME : PLOT SCALE : 1:20

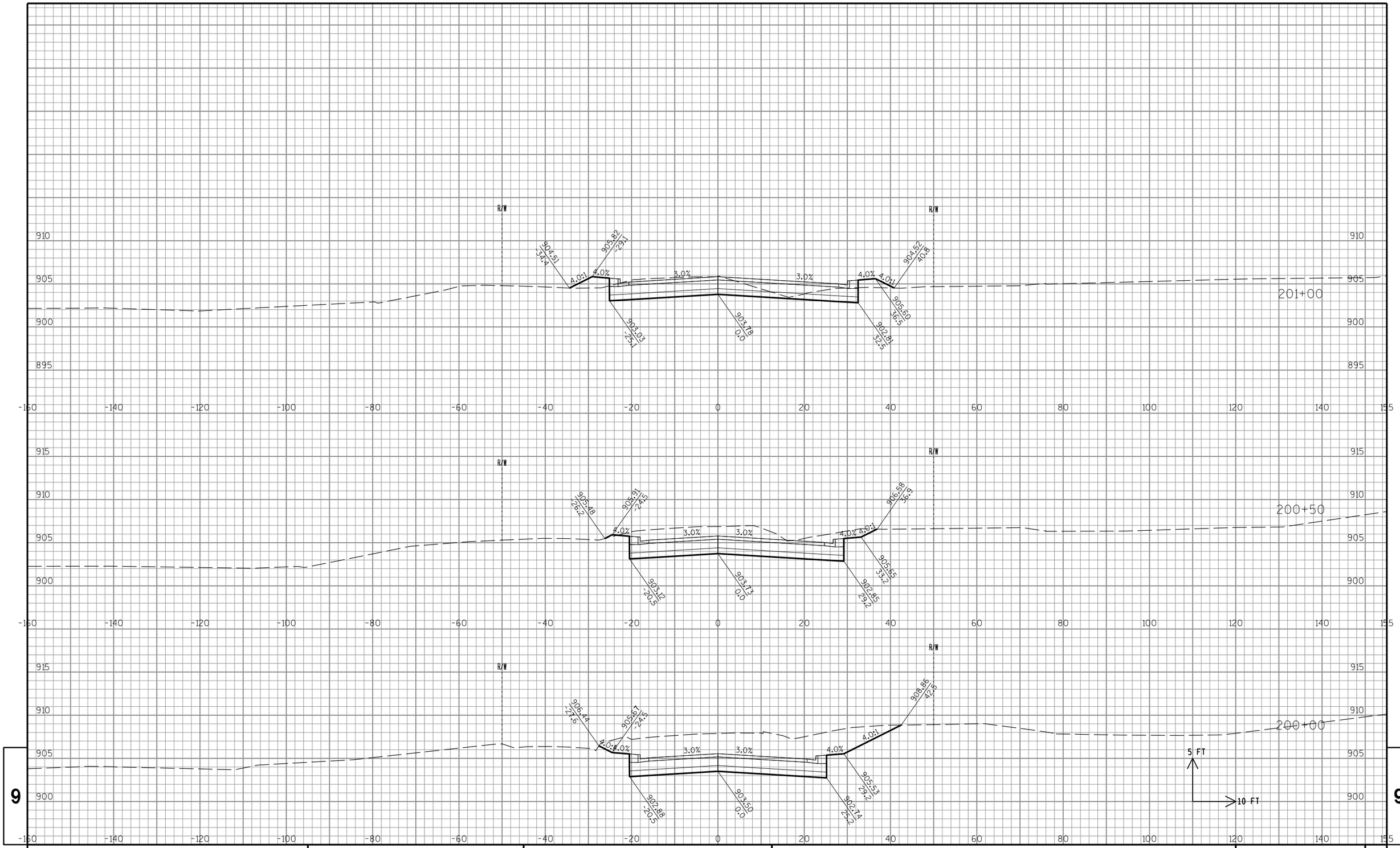

STATE PROJECT NO: 2722-10-70	HWY: COFFEE ROAD	COUNTY: WAUKESHA	CROSS SECTIONS: COFFEE RD	SHEET NO: . 264	E

FILE NAME : S:\Wauk_Co\NewBerlin\Gov\08.0099 Coffee Rd\Design\090201_XS_Coffee.dgn PLOT DATE : 10/30/2013 PLOT BY : Nick_B PLOT NAME : PLOT SCALE : 1:20

9 9

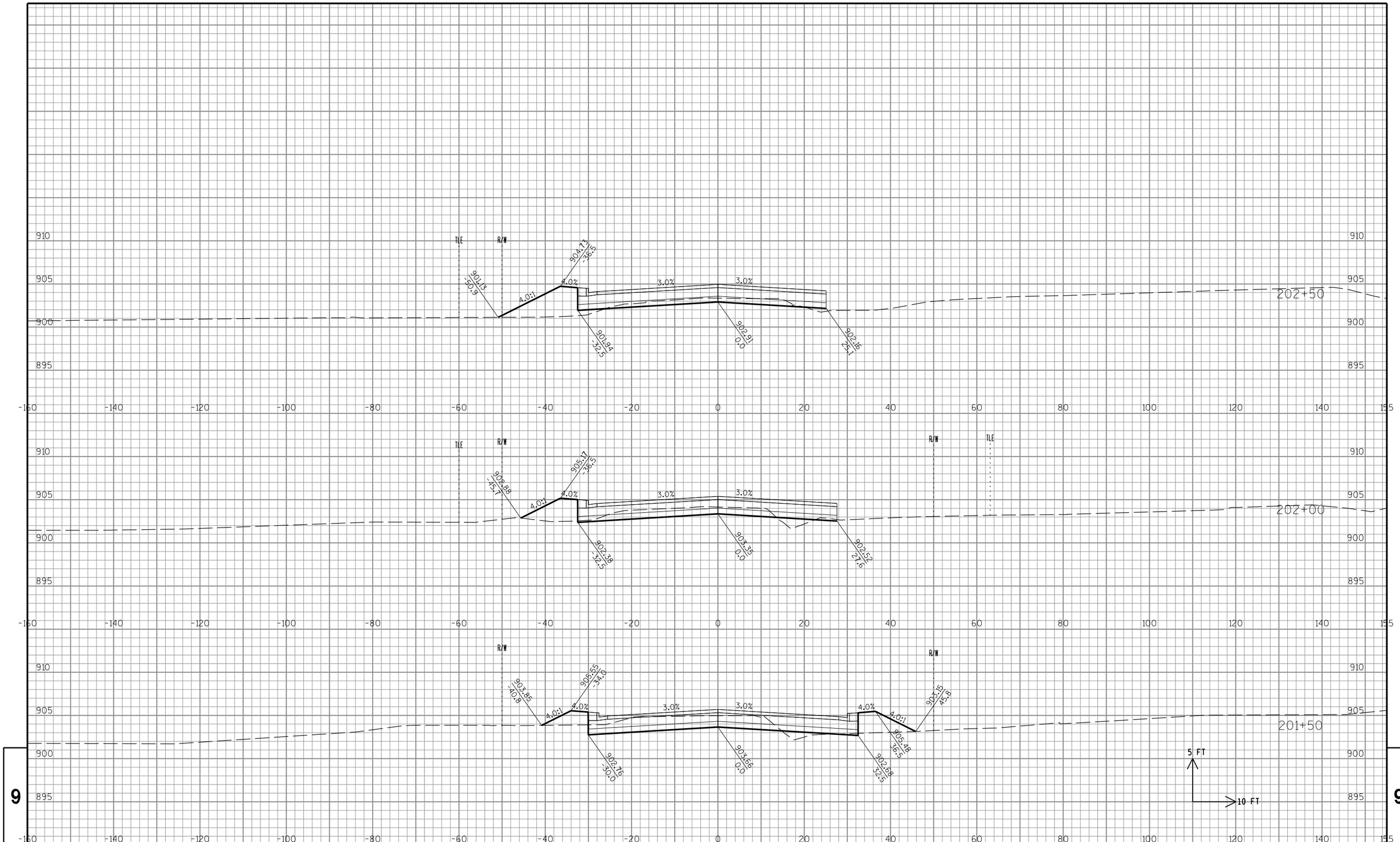

9

9

STATE PROJECT NO: 2722-10-70	HWY: COFFEE ROAD	COUNTY: WAUKESHA	CROSS SECTIONS: COFFEE RD	SHEET NO: . 265	E

FILE NAME : S:\Wauk_Co\NewBerlin\Gov\08.0099 Coffee Rd\Design\090201_XS_Coffee.dgn PLOT DATE : 10/30/2013 PLOT BY : Nick_B PLOT NAME : PLOT SCALE : 1:20

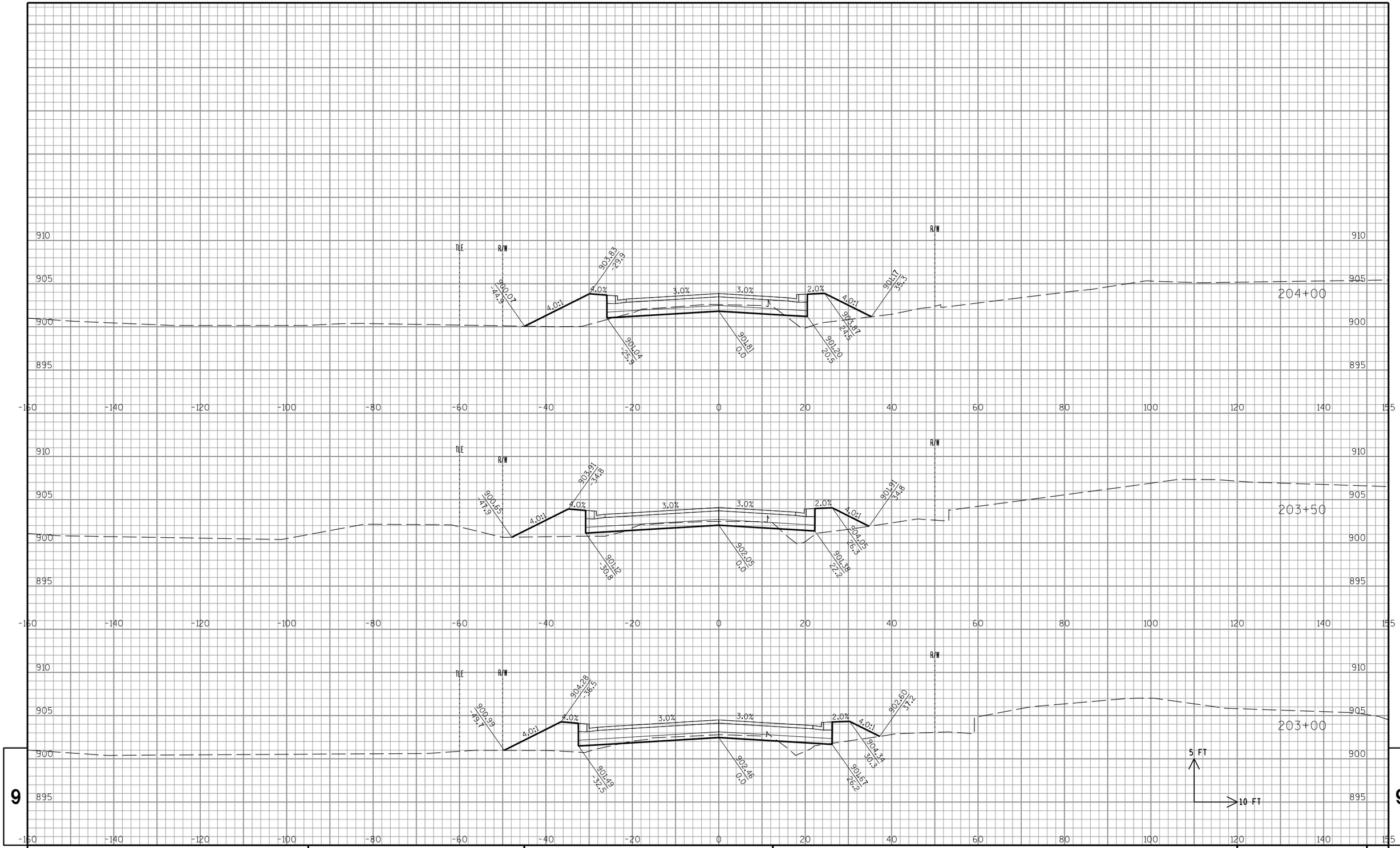

9

9

STATE PROJECT NO: 2722-10-70	HWY: COFFEE ROAD	COUNTY: WAUKESHA	CROSS SECTIONS: COFFEE RD	SHEET NO: . 266	E

FILE NAME : S:\Wauk_Co\NewBerlin\Gov\08.0099 Coffee Rd\Design\090201_XS_Coffee.dgn PLOT DATE : 10/30/2013 PLOT BY : Nick_B PLOT NAME : PLOT SCALE : 1:20

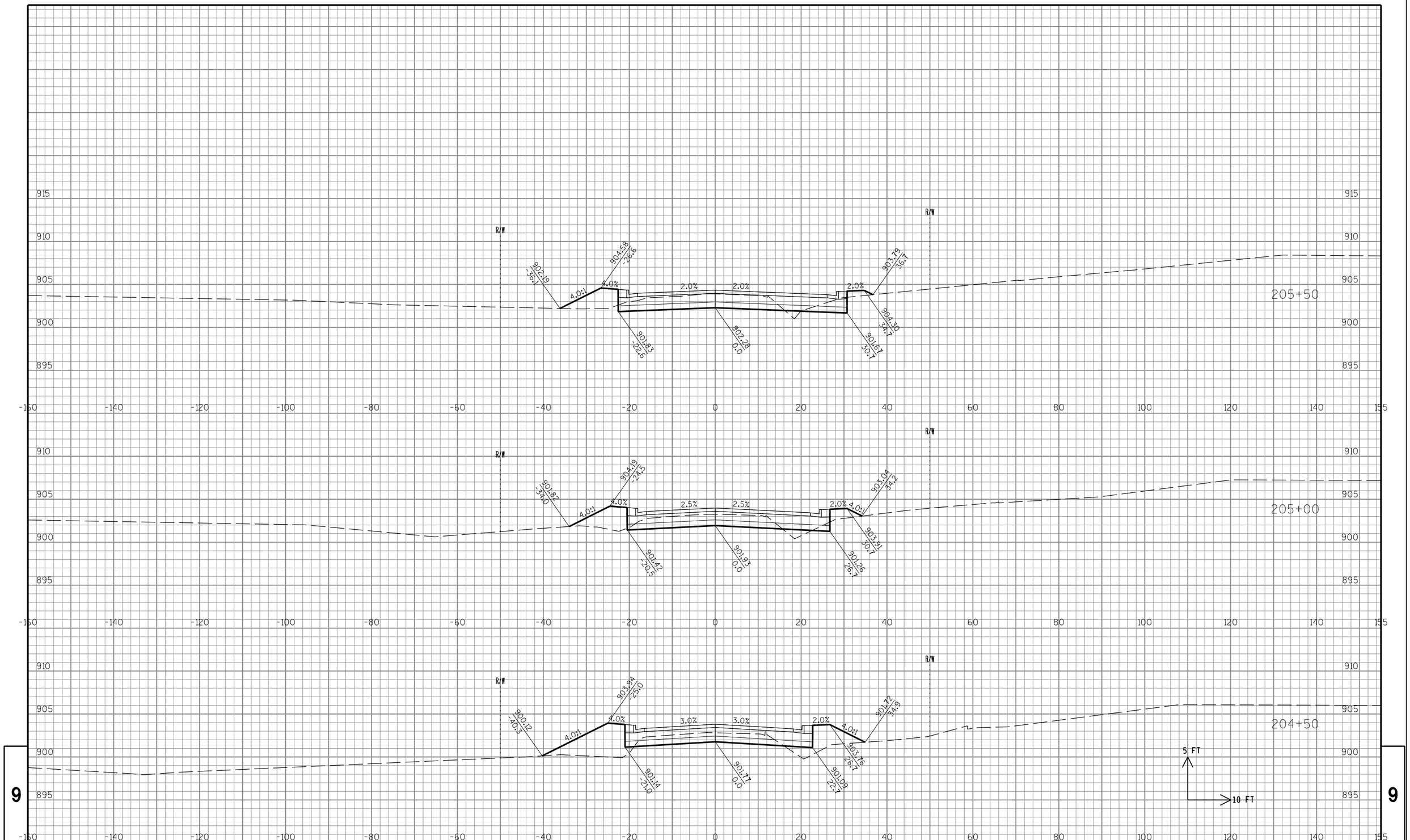

STATE PROJECT NO: 2722-10-70	HWY: COFFEE ROAD	COUNTY: WAUKESHA	CROSS SECTIONS: COFFEE RD	SHEET NO: . 267	E

FILE NAME : S:\Wauk_Co\NewBerlin\Gov\08.0099 Coffee Rd\Design\090201_XS_Coffee.dgn PLOT DATE : 10/30/2013 PLOT BY : Nick_B PLOT NAME : PLOT SCALE : 1:20

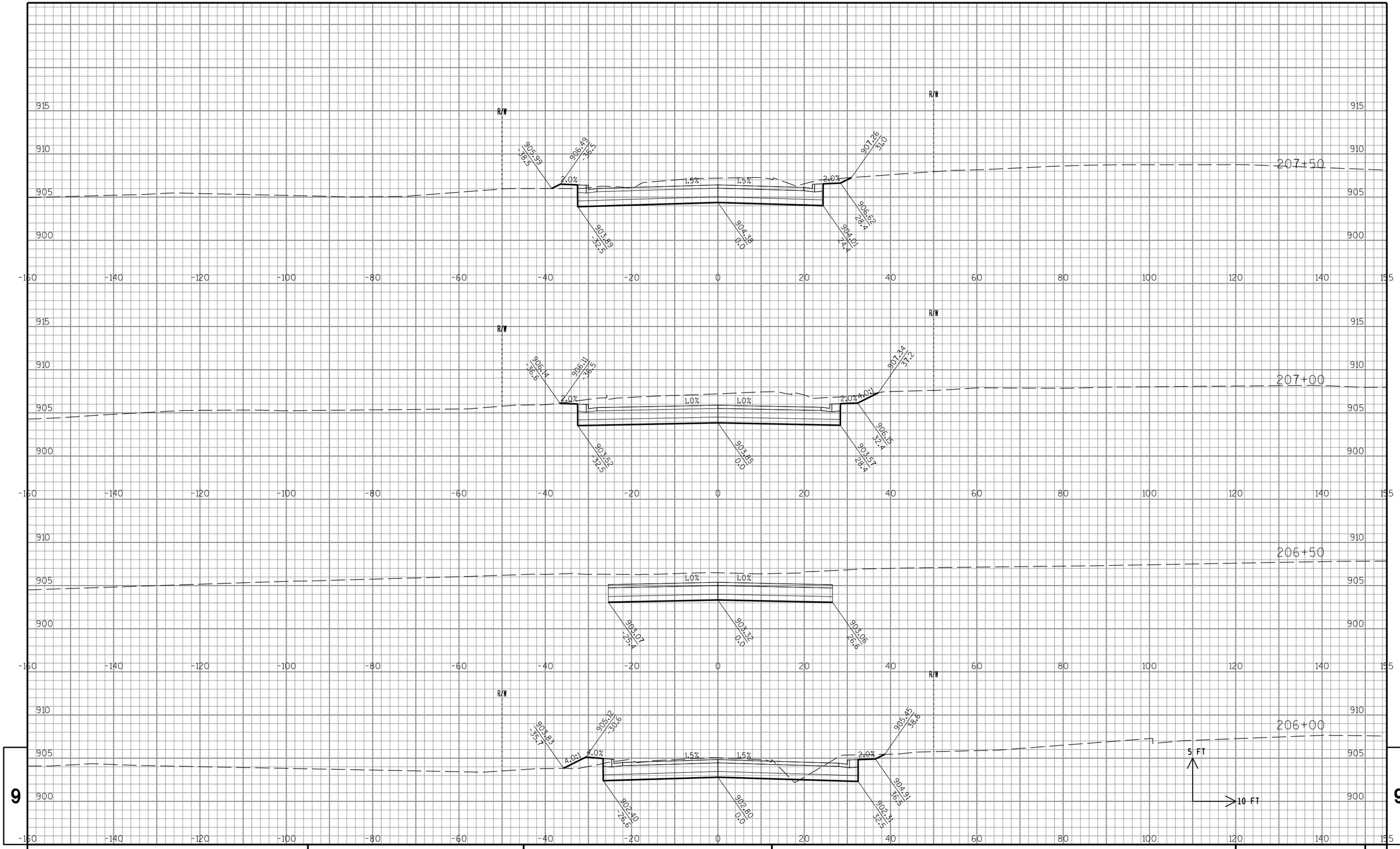

STATE PROJECT NO: 2722-10-70	HWY: COFFEE ROAD	COUNTY: WAUKESHA	CROSS SECTIONS: COFFEE RD	SHEET NO: . 268	E

FILE NAME : S:\Wauk_Co\NewBerlin\Gov\08.0099 Coffee Rd\Design\090201_XS_Coffee.dgn PLOT DATE : 10/30/2013 PLOT BY : Nick_B PLOT NAME : PLOT SCALE : 1:20

9 9

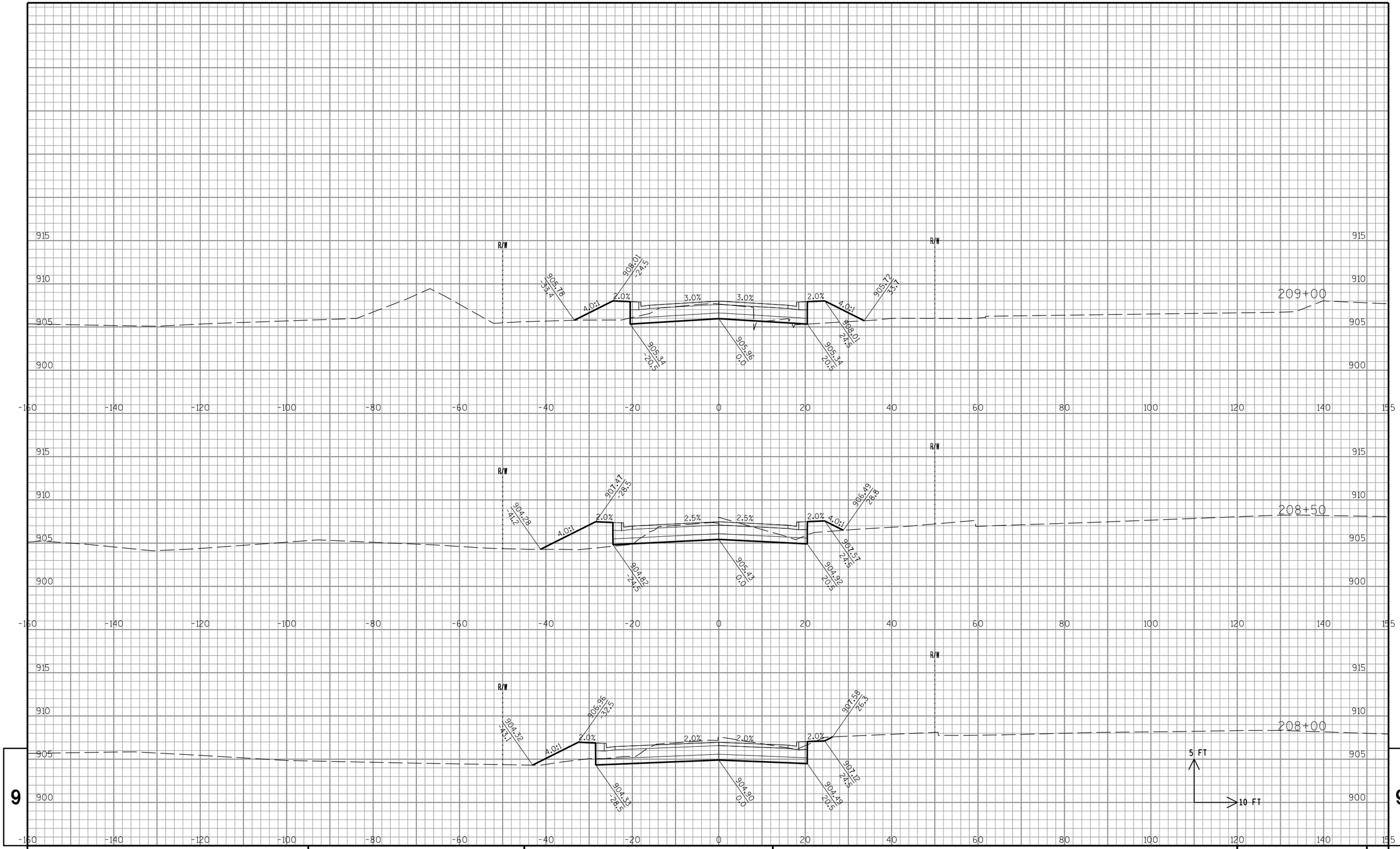

STATE PROJECT NO: 2722-10-70	HWY: COFFEE ROAD	COUNTY: WAUKESHA	CROSS SECTIONS: COFFEE RD	SHEET NO: . 269	E

FILE NAME : S:\Wauk_Co\NewBerlin\Gov\08.0099 Coffee Rd\Design\090201_XS_Coffee.dgn PLOT DATE : 10/30/2013 PLOT BY : Nick_B PLOT NAME : PLOT SCALE : 1:20

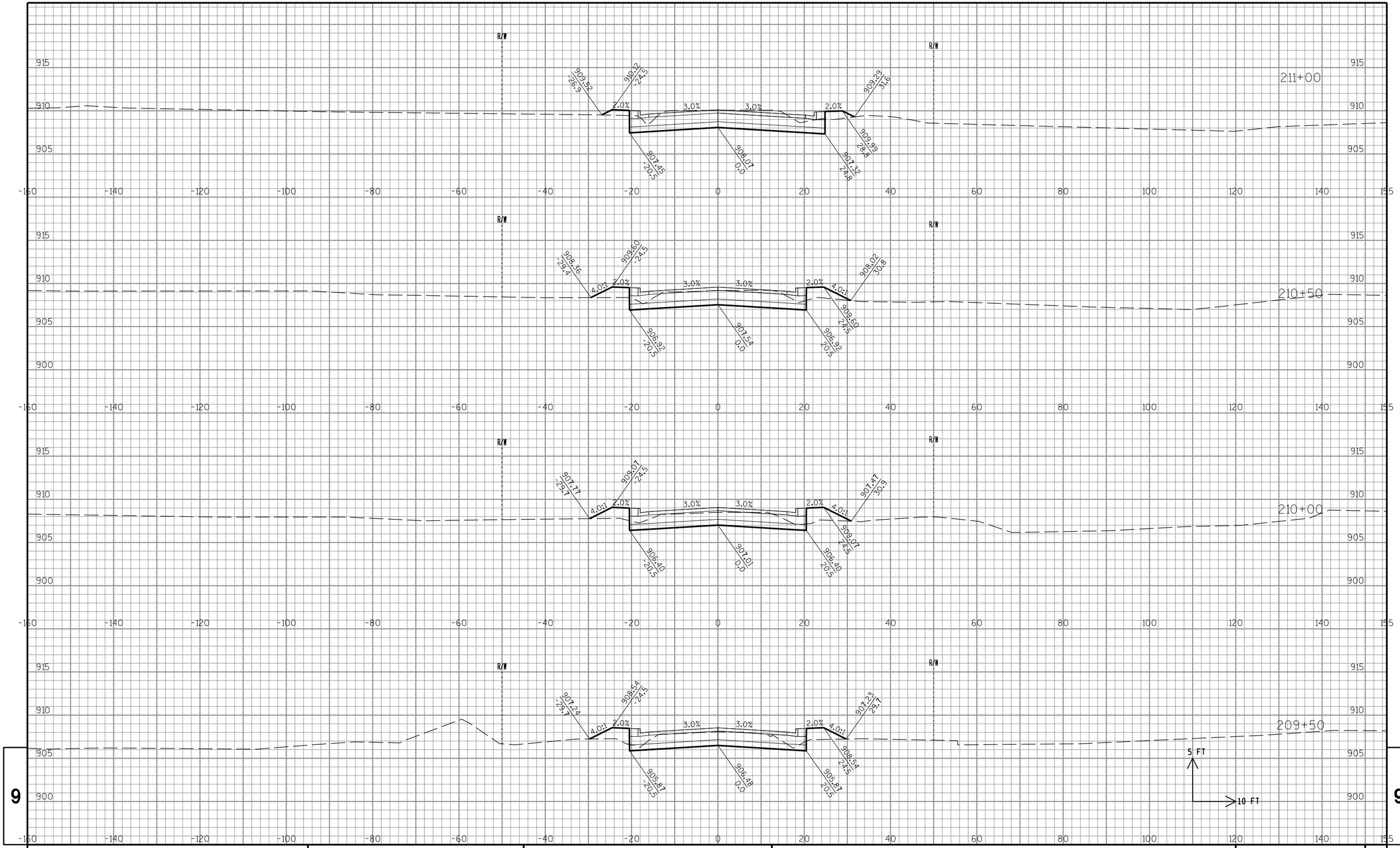

STATE PROJECT NO: 2722-10-70	HWY: COFFEE ROAD	COUNTY: WAUKESHA	CROSS SECTIONS: COFFEE RD	SHEET NO: . 270	E

FILE NAME : S:\Wauk_Co\NewBerlin\Gov\08.0099 Coffee Rd\Design\090201_XS_Coffee.dgn PLOT DATE : 10/30/2013 PLOT BY : Nick_B PLOT NAME : PLOT SCALE : 1:20

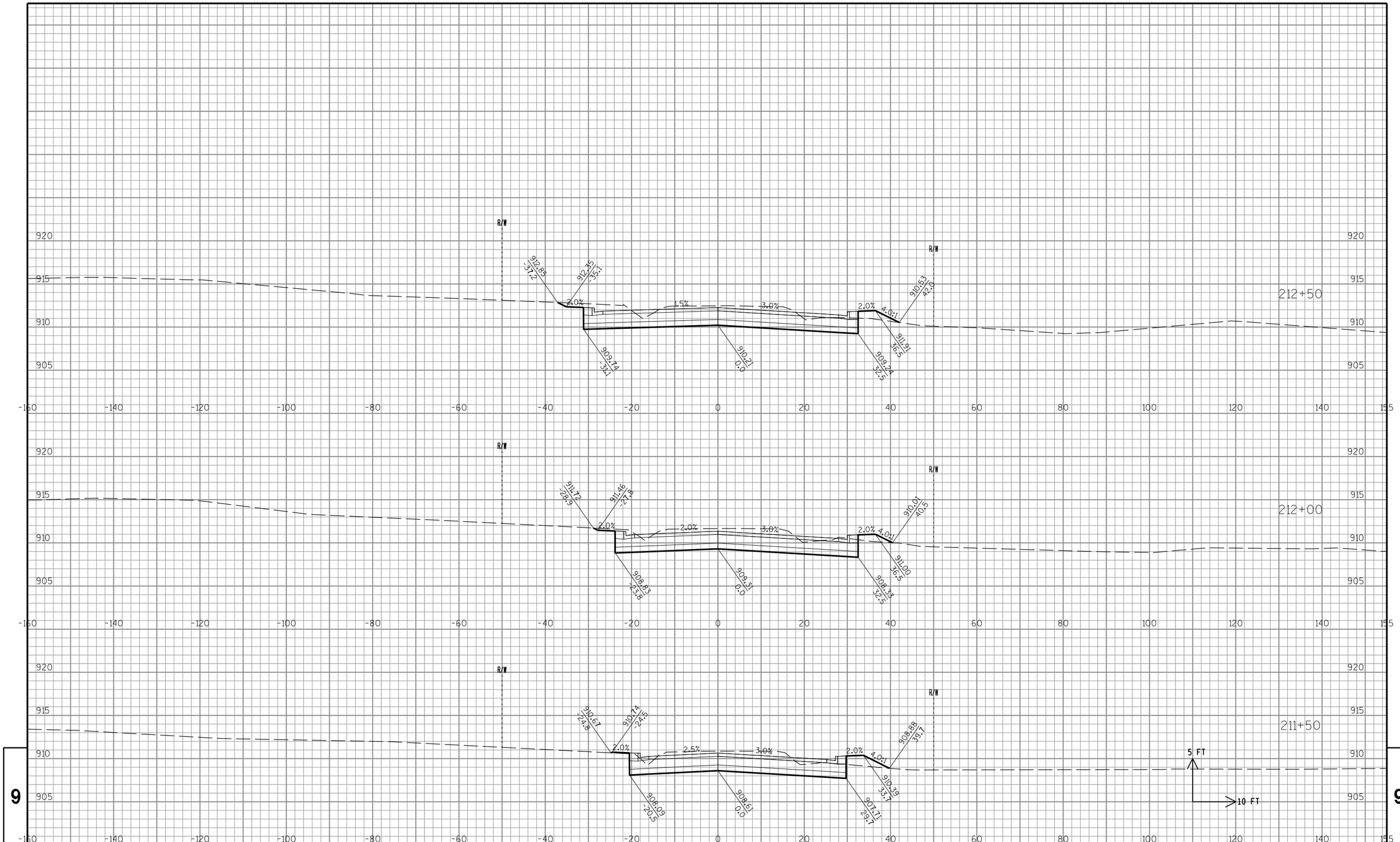

9

9

STATE PROJECT NO: 2722-10-70	HWY: COFFEE ROAD	COUNTY: WAUKESHA	CROSS SECTIONS: COFFEE RD	SHEET NO: . 271	E

FILE NAME : S:\Wauk_Co\NewBerlin\Gov\08.0099 Coffee Rd\Design\090201_XS_Coffee.dgn PLOT DATE : 10/30/2013 PLOT BY : Nick_B PLOT NAME : PLOT SCALE : 1:20

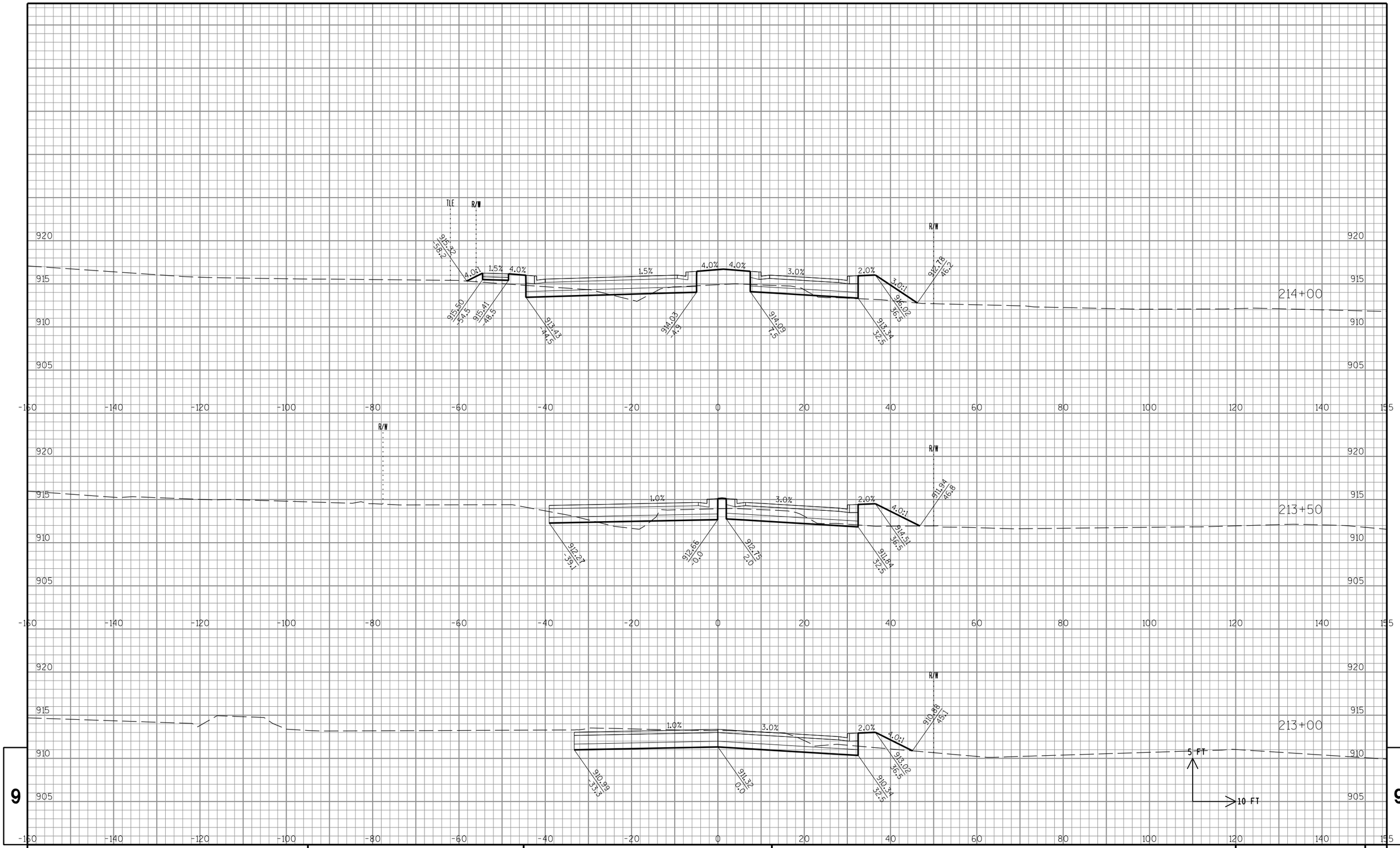
TLE
R/W
915.32
58.2
4.0:1
1.5%
4.0%
1.5%
4.0%
4.0%
3.0%
2.0%
3.0:1
912.78
46.2
915.50
54.3
915.41
48.5
913.43
44.5
914.03
-4.9
914.09
7.5
913.34
32.5
916.02
36.5
214+00
912.27
-39.1
912.65
-0.0
912.79
2.0
911.84
32.5
914.51
36.5
4.0:1
911.94
46.8
213+50
910.99
35.3
911.32
0.0
910.34
32.5
913.02
36.5
4.0:1
910.88
45.1
213+00
5 FT
10 FT
9
9
STATE PROJECT NO: 2722-10-70
HWY: COFFEE ROAD
COUNTY: WAUKESHA
CROSS SECTIONS: COFFEE RD
SHEET NO: . 272
E
FILE NAME : S:\Wauk_Co\NewBerlin\Gov\08.0099 Coffee Rd\Design\090201_XS_Coffee.dgn
PLOT DATE : 10/30/2013
PLOT BY : Nick_B
PLOT NAME :
PLOT SCALE : 1:20

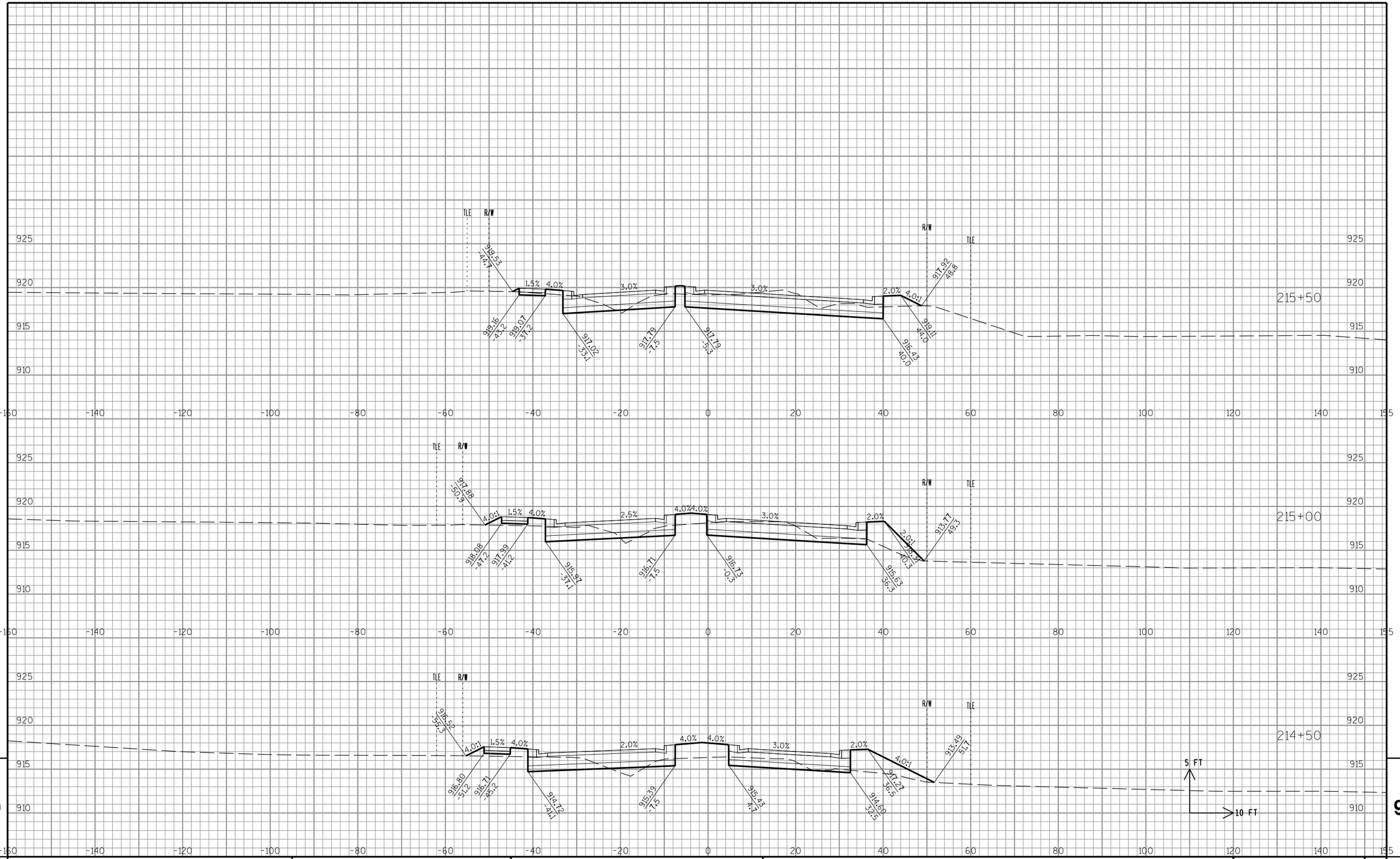

STATE PROJECT NO: 2722-10-70	HWY: COFFEE ROAD	COUNTY: WAUKESHA	CROSS SECTIONS: COFFEE RD	SHEET NO: . 273	E

FILE NAME : S:\Wauk_Co\NewBerlin\Gov\08.0099 Coffee Rd\Design\090201_XS_Coffee.dgn PLOT DATE : 10/30/2013 PLOT BY : Nick_B PLOT NAME : PLOT SCALE : 1:20

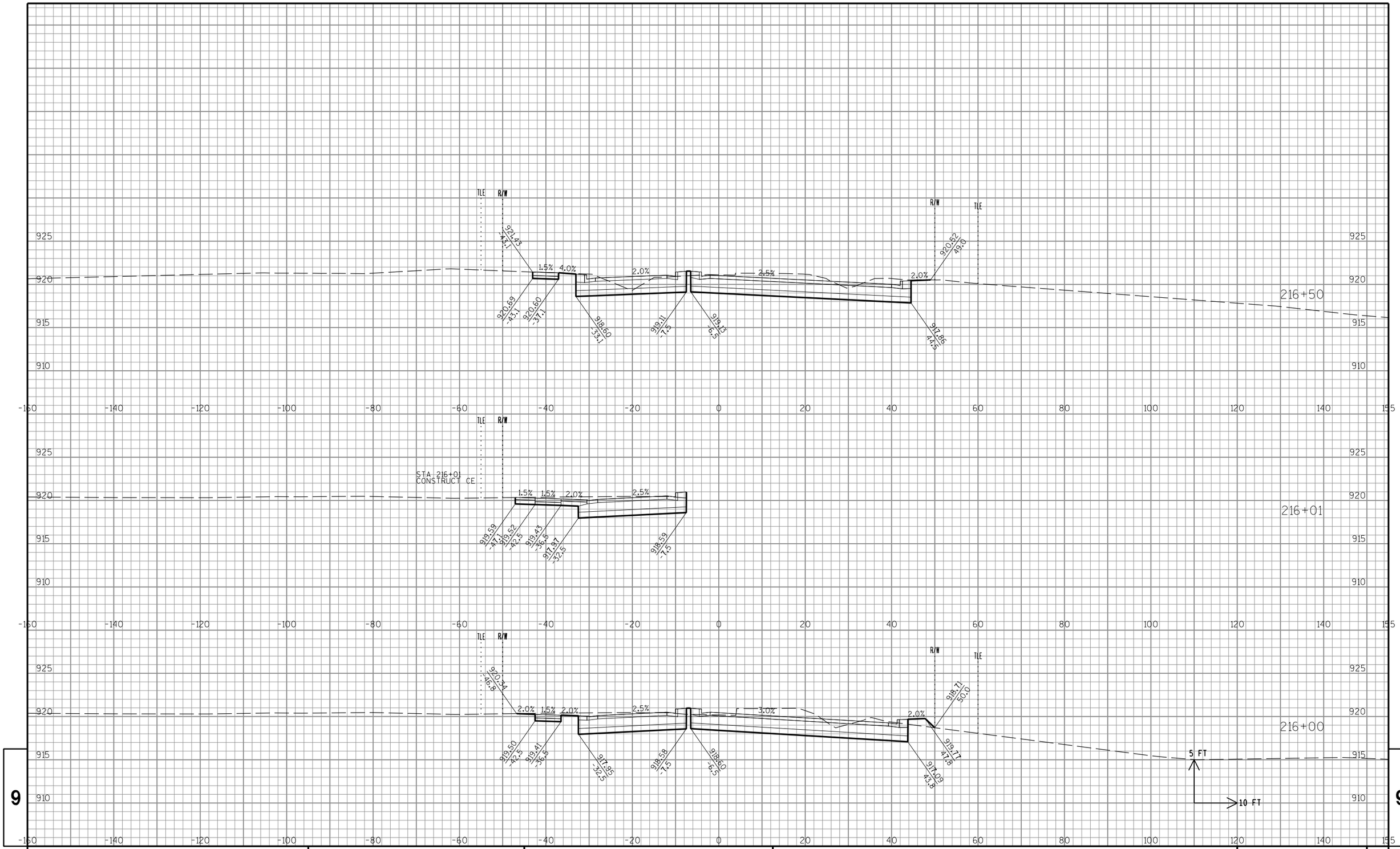

9

9

STATE PROJECT NO: 2722-10-70	HWY: COFFEE ROAD	COUNTY: WAUKESHA	CROSS SECTIONS: COFFEE RD	SHEET NO: . 274	E

FILE NAME : S:\Wauk_Co\NewBerlin\Gov\08.0099 Coffee Rd\Design\090201_XS_Coffee.dgn PLOT DATE : 10/30/2013 PLOT BY : Nick_B PLOT NAME : PLOT SCALE : 1:20

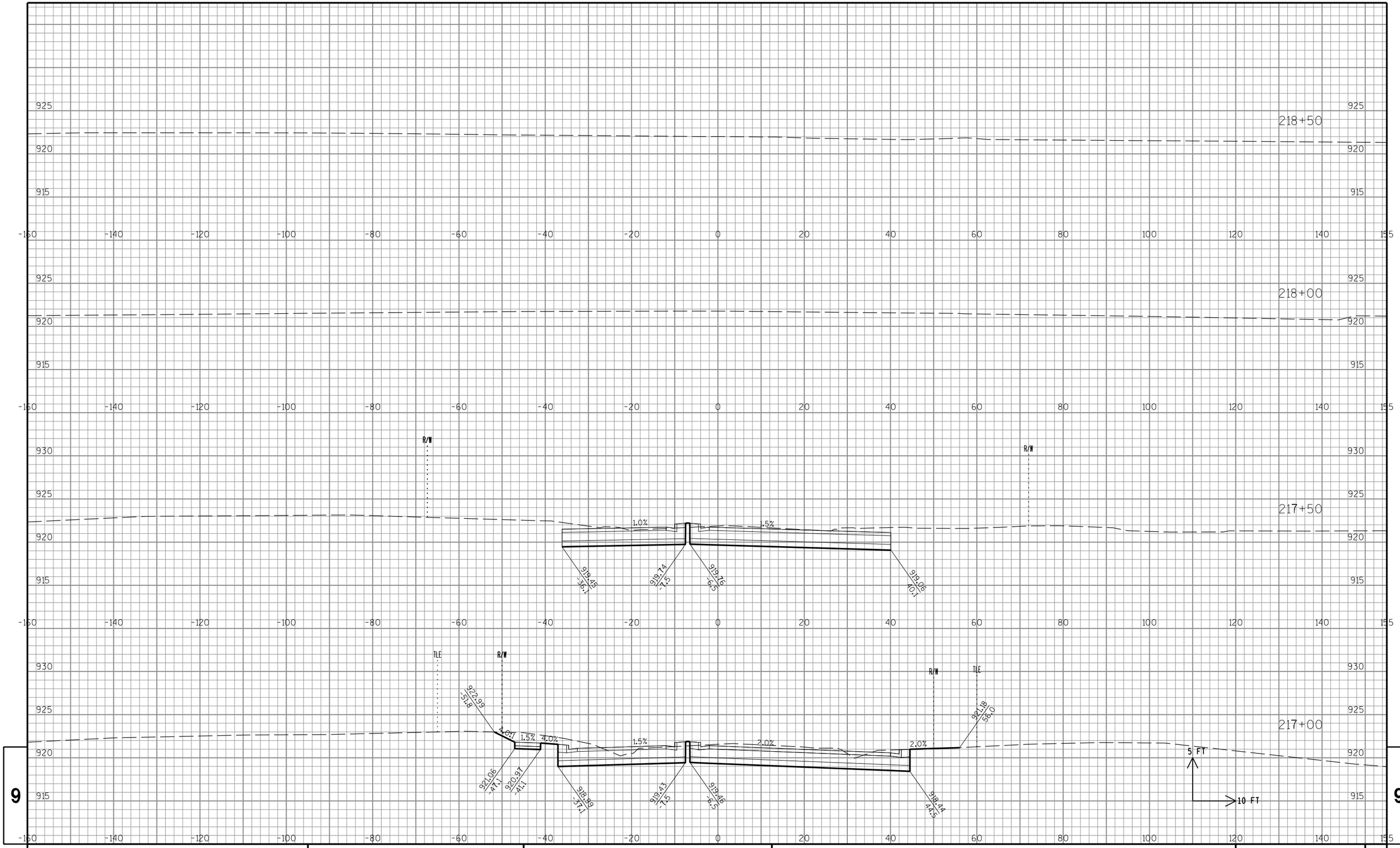

9

9

STATE PROJECT NO: 2722-10-70	HWY: COFFEE ROAD	COUNTY: WAUKESHA	CROSS SECTIONS: COFFEE RD	SHEET NO: . 275	E

FILE NAME : S:\Wauk_Co\NewBerlin\Gov\08.0099 Coffee Rd\Design\090201_XS_Coffee.dgn PLOT DATE : 10/30/2013 PLOT BY : Nick_B PLOT NAME : PLOT SCALE : 1:20

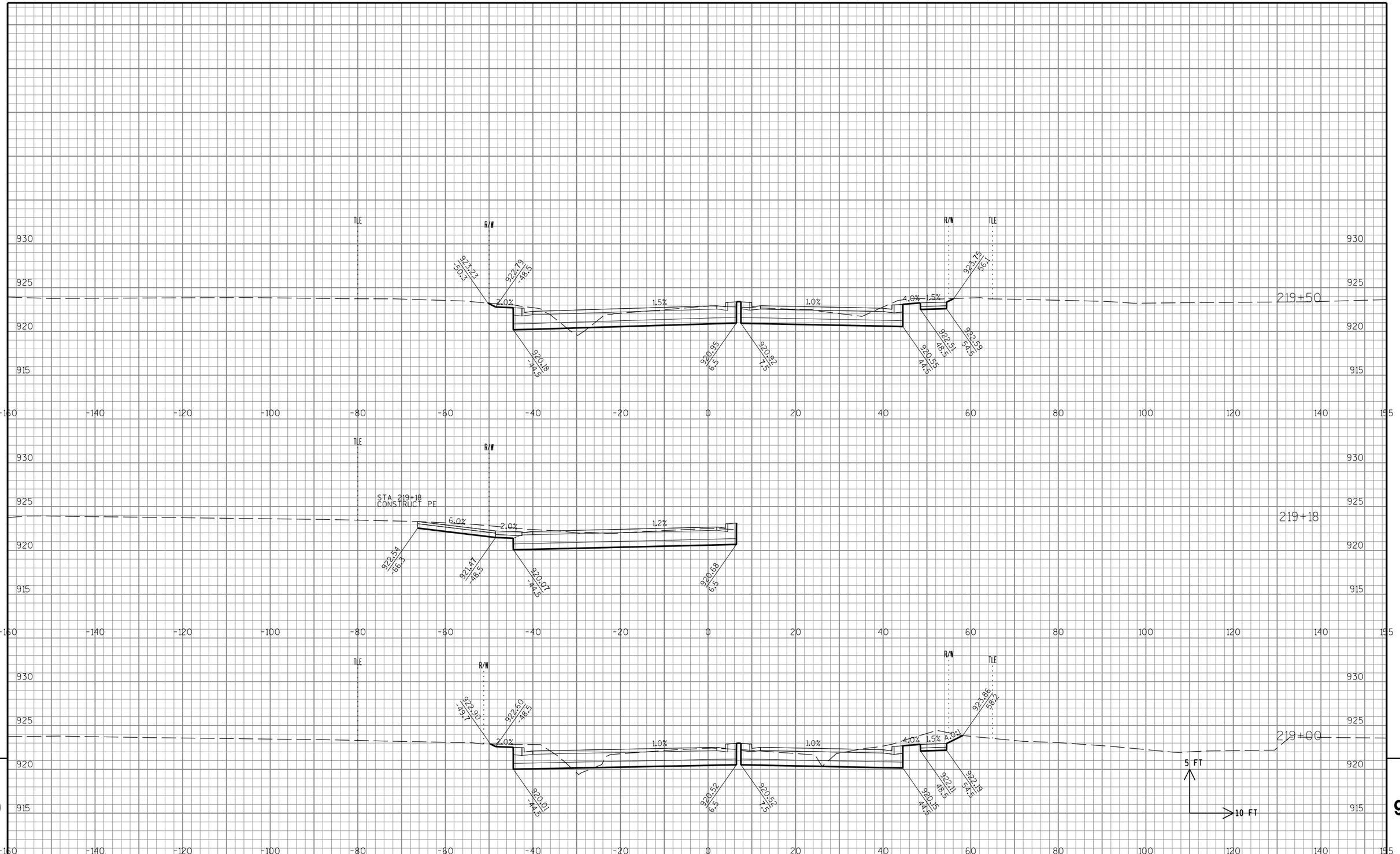

STATE PROJECT NO: 2722-10-70	HWY: COFFEE ROAD	COUNTY: WAUKESHA	CROSS SECTIONS: COFFEE RD	SHEET NO: . 276	E

FILE NAME : S:\Wauk_Co\NewBerlin\Gov\08.0099 Coffee Rd\Design\090201_XS_Coffee.dgn PLOT DATE : 10/30/2013 PLOT BY : Nick_B PLOT NAME : PLOT SCALE : 1:20

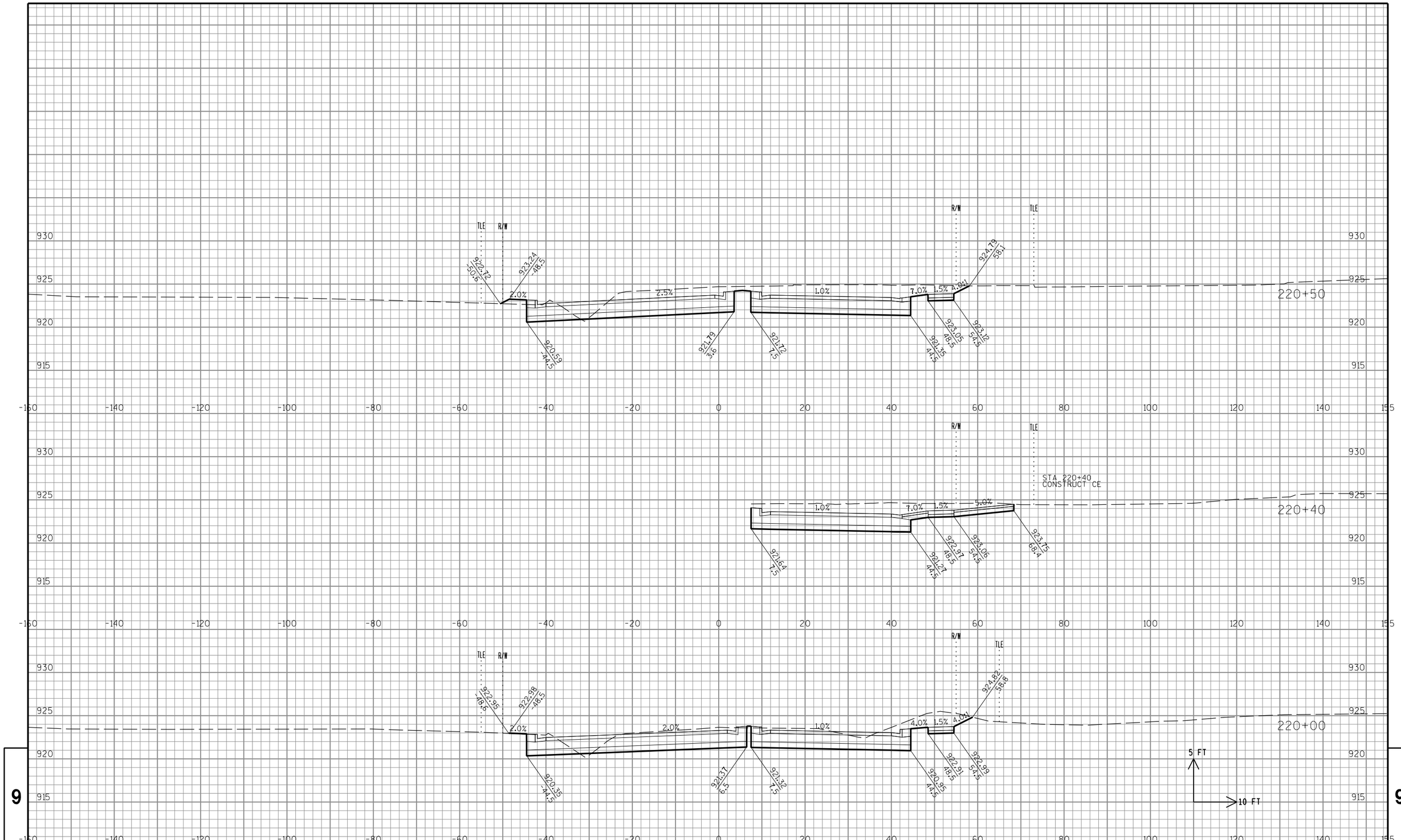

9

9

STATE PROJECT NO: 2722-10-70	HWY: COFFEE ROAD	COUNTY: WAUKESHA	CROSS SECTIONS: COFFEE RD	SHEET NO: . 277	E

FILE NAME : S:\Wauk_Co\NewBerlin\Gov\08.0099 Coffee Rd\Design\090201_XS_Coffee.dgn PLOT DATE : 10/30/2013 PLOT BY : Nick_B PLOT NAME : PLOT SCALE : 1:20

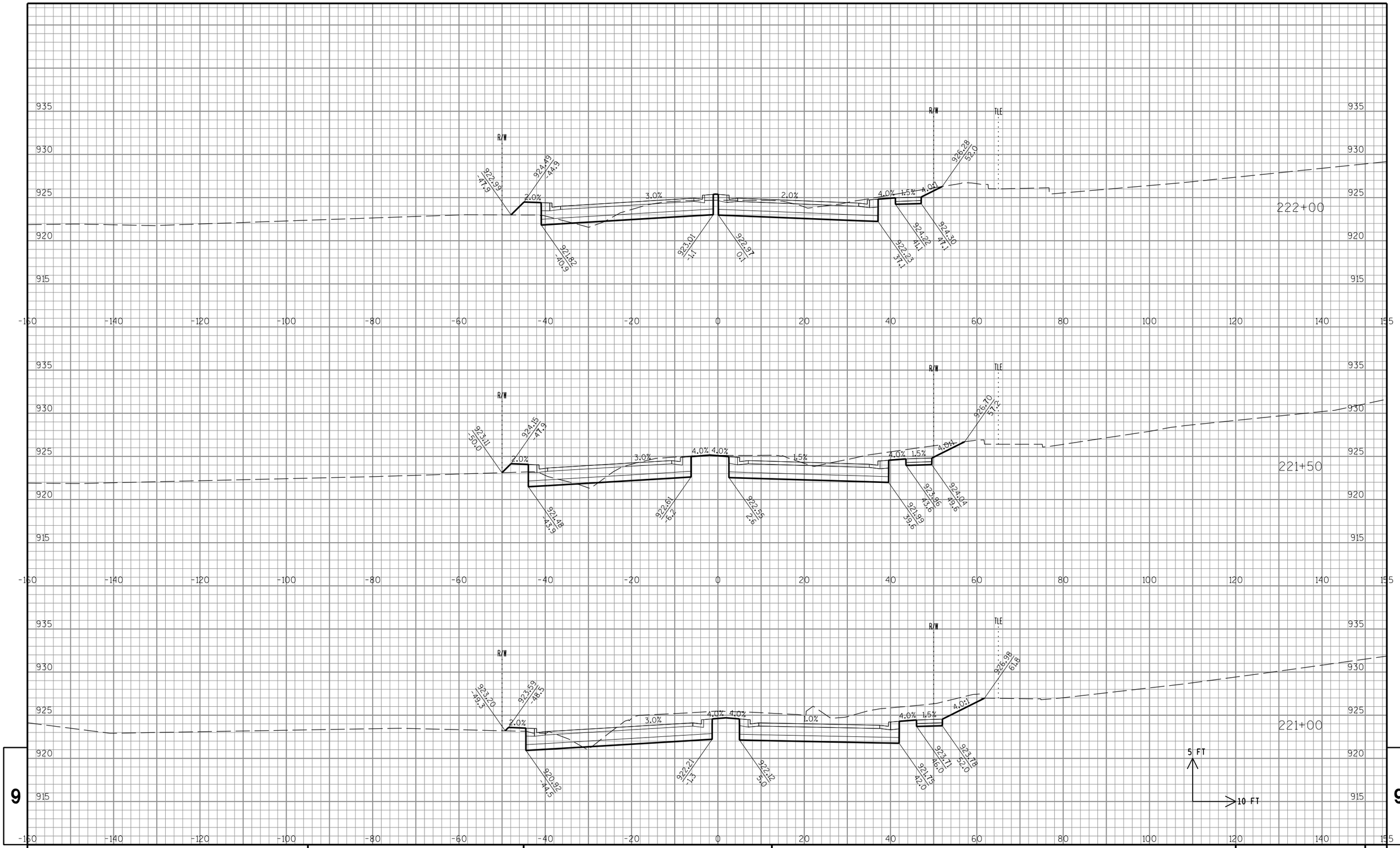

STATE PROJECT NO: 2722-10-70	HWY: COFFEE ROAD	COUNTY: WAUKESHA	CROSS SECTIONS: COFFEE RD	SHEET NO: . 278	E

FILE NAME : S:\Wauk_Co\NewBerlin\Gov\08.0099 Coffee Rd\Design\090201_XS_Coffee.dgn PLOT DATE : 10/30/2013 PLOT BY : Nick_B PLOT NAME : PLOT SCALE : 1:20

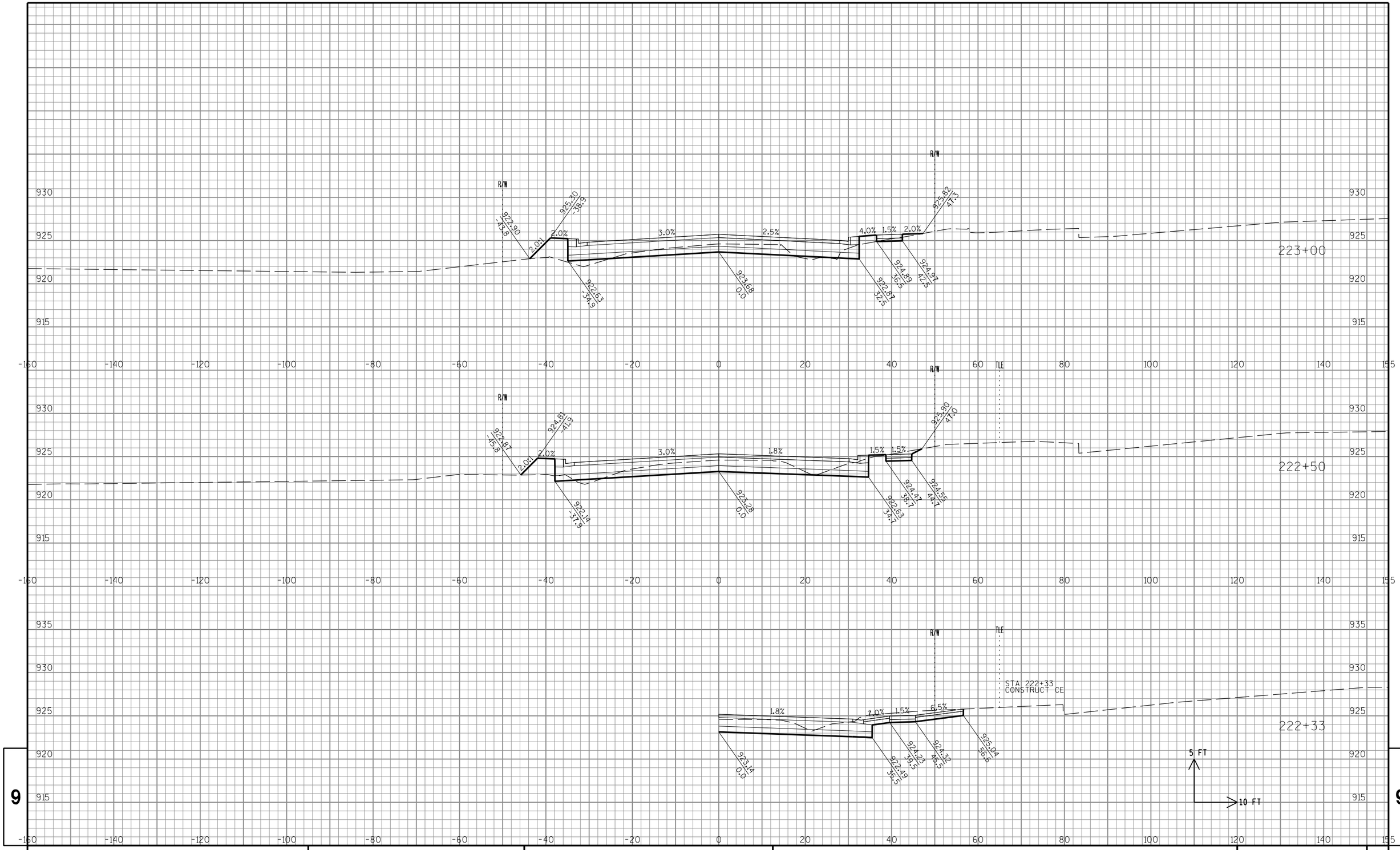

STATE PROJECT NO: 2722-10-70	HWY: COFFEE ROAD	COUNTY: WAUKESHA	CROSS SECTIONS: COFFEE RD	SHEET NO: . 279	E

FILE NAME : S:\Wauk_Co\NewBerlin\Gov\08.0099 Coffee Rd\Design\090201_XS_Coffee.dgn PLOT DATE : 10/30/2013 PLOT BY : Nick_B PLOT NAME : PLOT SCALE : 1:20

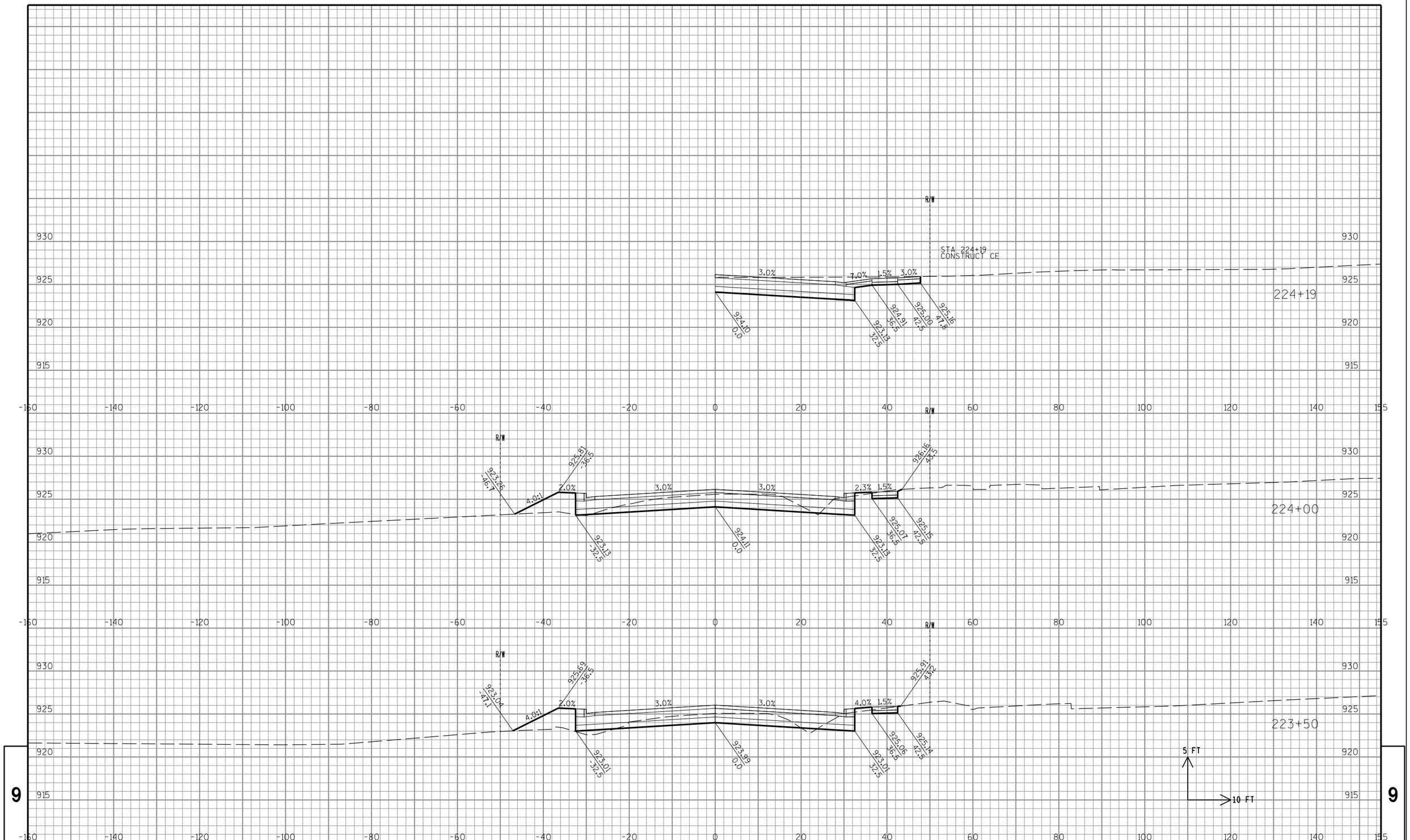

9

9

STATE PROJECT NO: 2722-10-70	HWY: COFFEE ROAD	COUNTY: WAUKESHA	CROSS SECTIONS: COFFEE RD	SHEET NO: . 280	E

FILE NAME : S:\Wauk_Co\NewBerlin\Gov\08.0099 Coffee Rd\Design\090201_XS_Coffee.dgn PLOT DATE : 10/30/2013 PLOT BY : Nick_B PLOT NAME : PLOT SCALE : 1:20

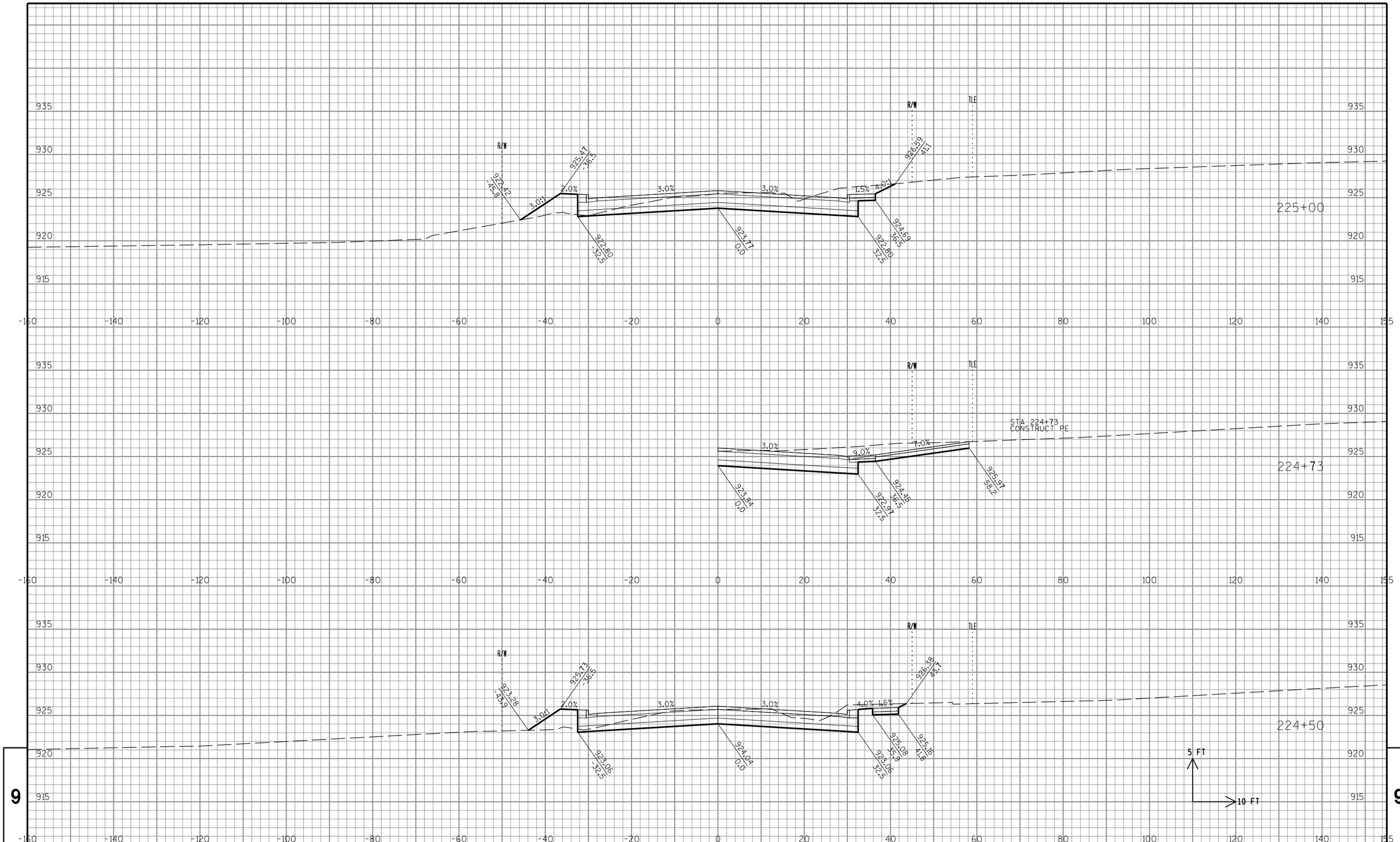

9

9

STATE PROJECT NO: 2722-10-70	HWY: COFFEE ROAD	COUNTY: WAUKESHA	CROSS SECTIONS: COFFEE RD	SHEET NO: . 281	E

FILE NAME : S:\Wauk_Co\NewBerlin\Gov\08.0099 Coffee Rd\Design\090201_XS_Coffee.dgn PLOT DATE : 10/30/2013 PLOT BY : Nick_B PLOT NAME : PLOT SCALE : 1:20

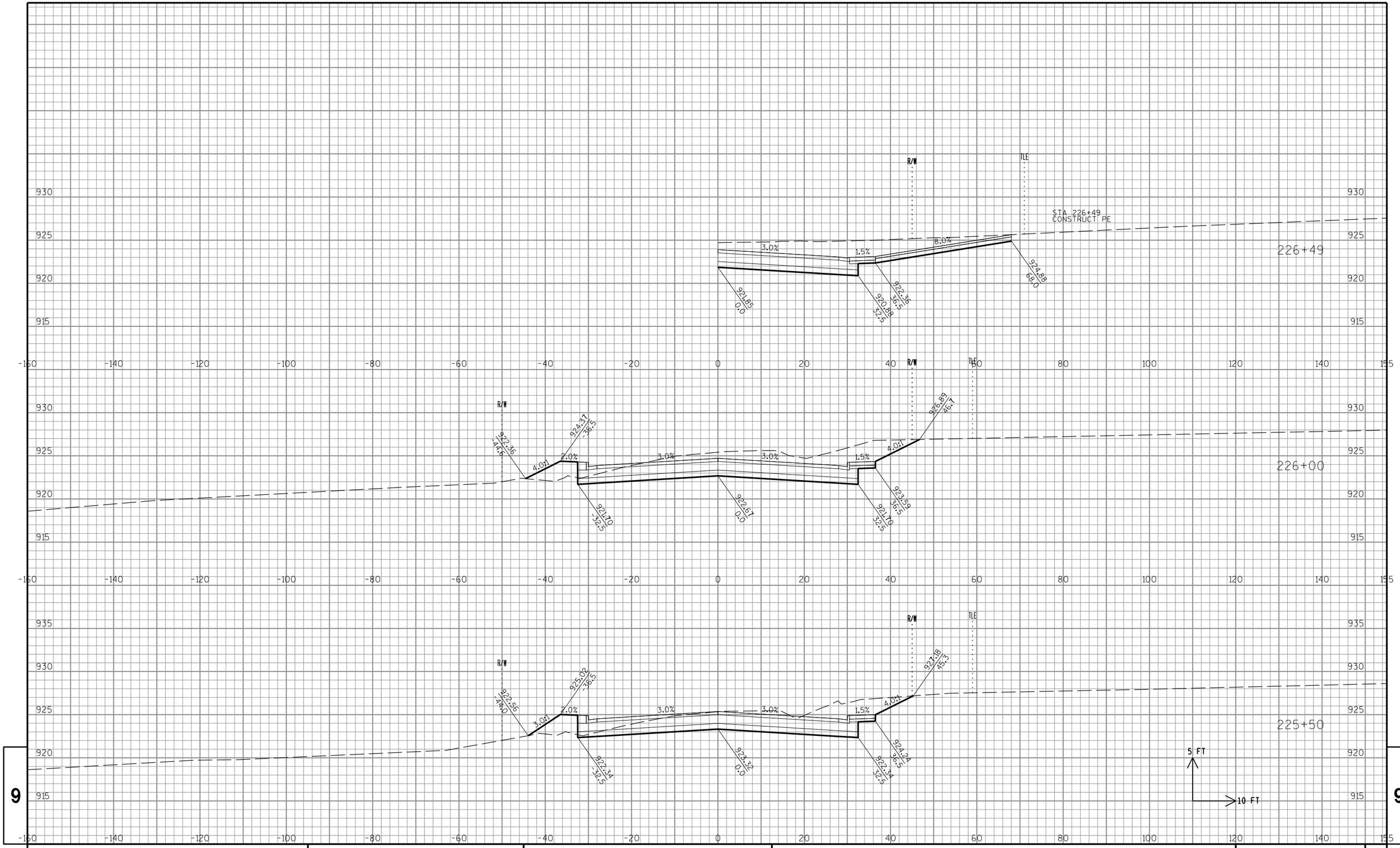

STATE PROJECT NO: 2722-10-70	HWY: COFFEE ROAD	COUNTY: WAUKESHA	CROSS SECTIONS: COFFEE RD	SHEET NO: . 282	E

FILE NAME : S:\Wauk_Co\NewBerlin\Gov\08.0099 Coffee Rd\Design\090201_XS_Coffee.dgn PLOT DATE : 10/30/2013 PLOT BY : Nick_B PLOT NAME : PLOT SCALE : 1:20

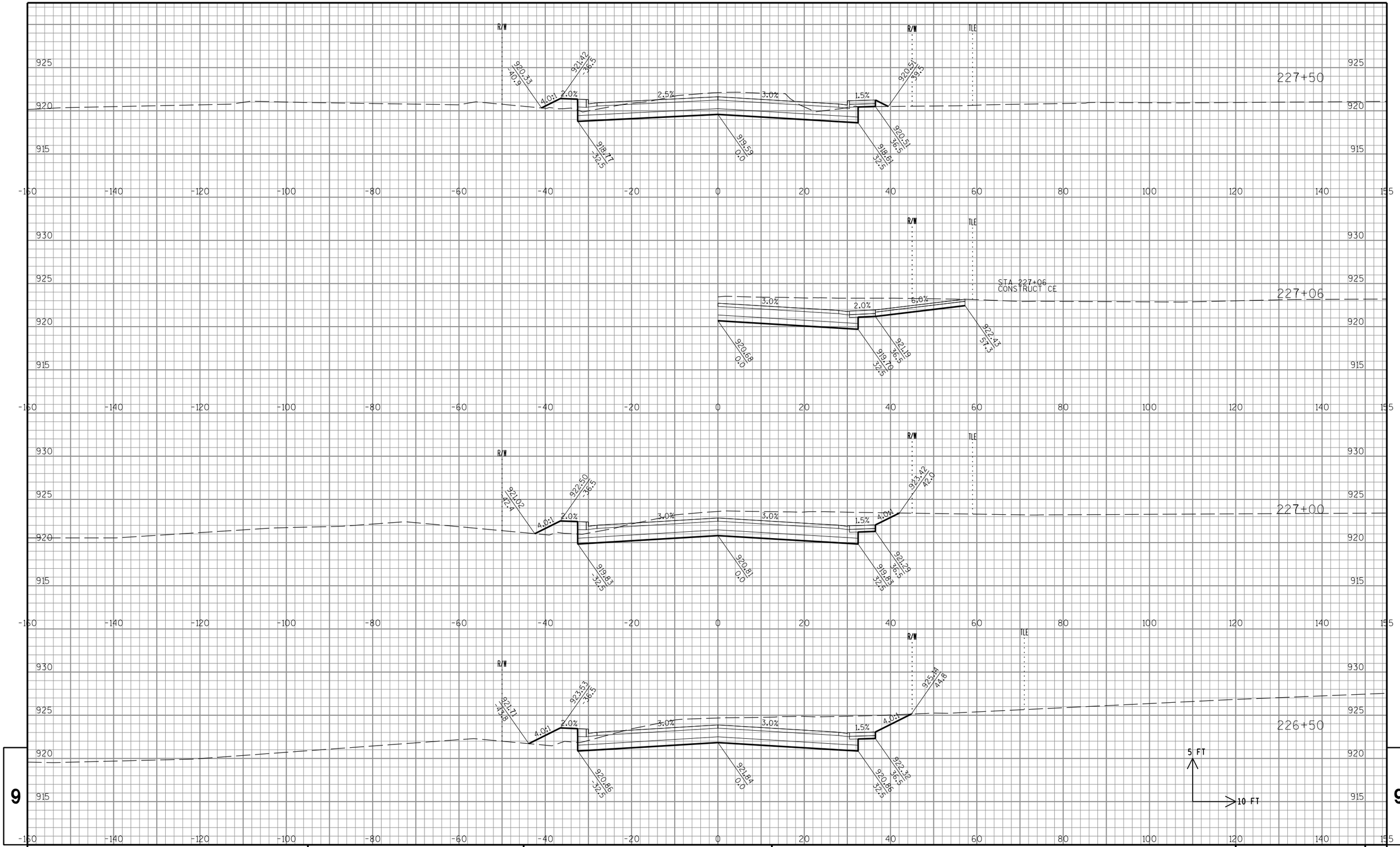

STATE PROJECT NO: 2722-10-70	HWY: COFFEE ROAD	COUNTY: WAUKESHA	CROSS SECTIONS: COFFEE RD	SHEET NO: . 283	E

FILE NAME : S:\Wauk_Co\NewBerlin\Gov\08.0099 Coffee Rd\Design\090201_XS_Coffee.dgn PLOT DATE : 10/30/2013 PLOT BY : Nick_B PLOT NAME : PLOT SCALE : 1:20

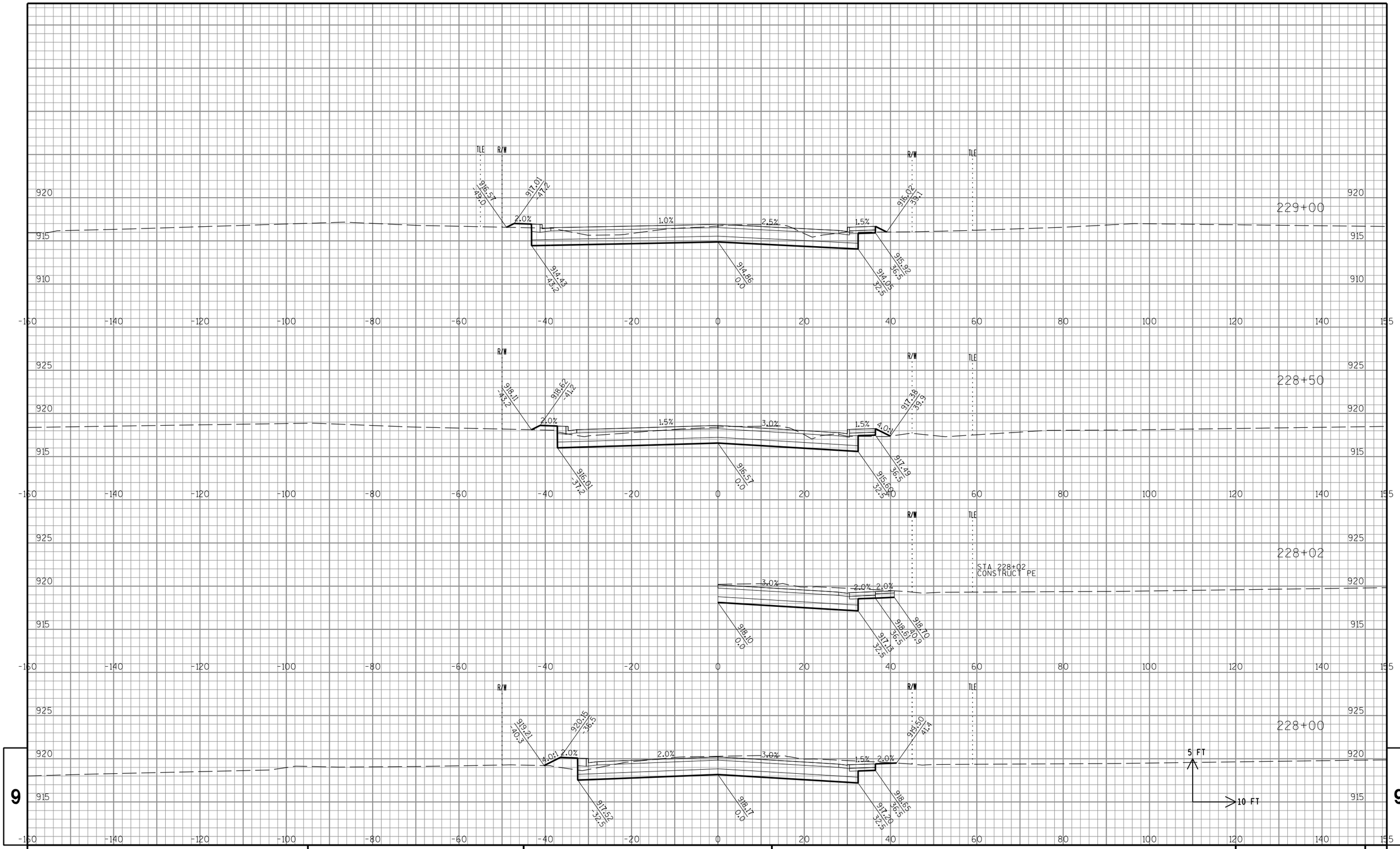

9

9

STATE PROJECT NO: 2722-10-70	HWY: COFFEE ROAD	COUNTY: WAUKESHA	CROSS SECTIONS: COFFEE RD	SHEET NO: . 284	E

FILE NAME : S:\Wauk_Co\NewBerlin\Gov\08.0099 Coffee Rd\Design\090201_XS_Coffee.dgn PLOT DATE : 10/30/2013 PLOT BY : Nick_B PLOT NAME : PLOT SCALE : 1:20

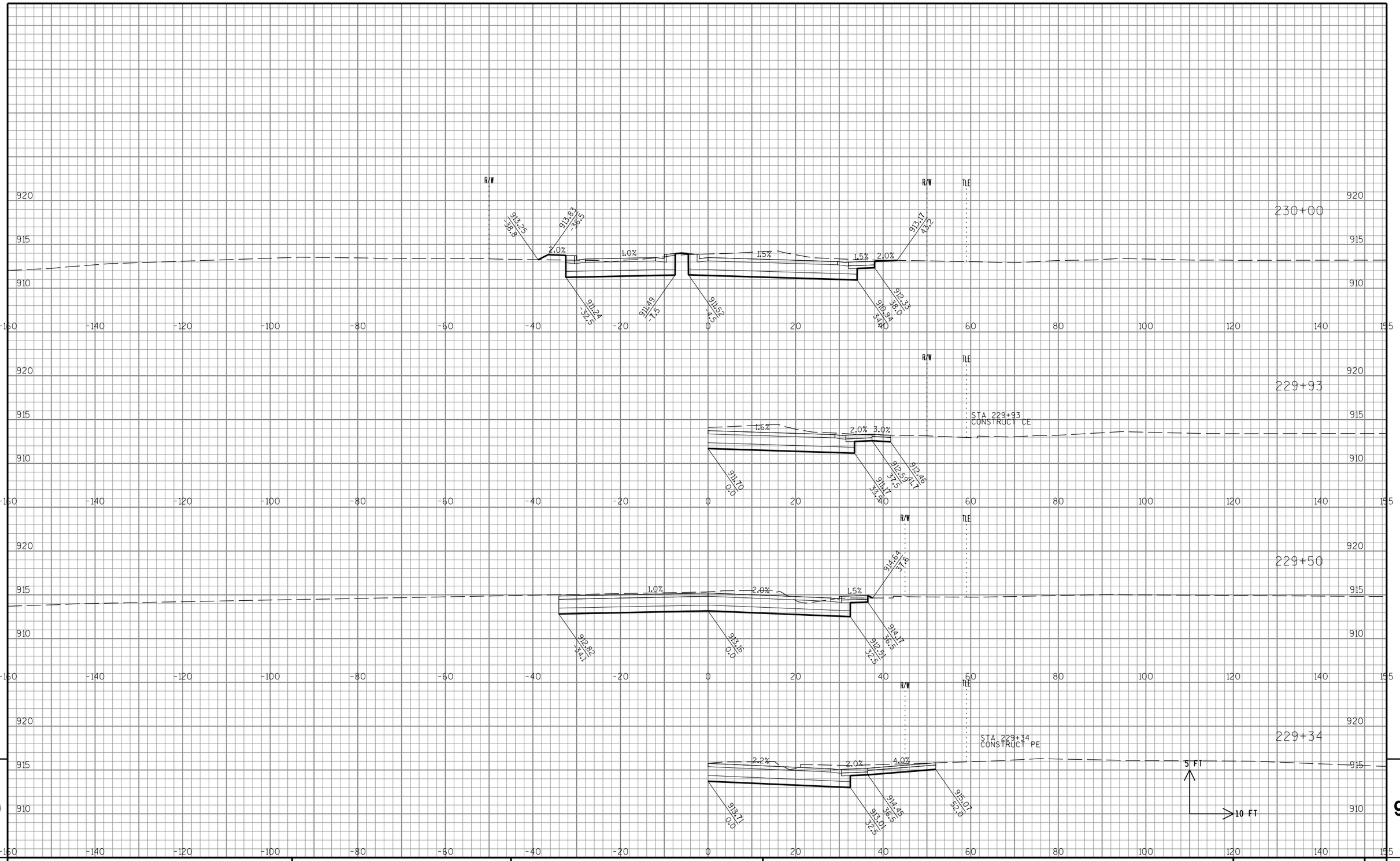

9

9

STATE PROJECT NO: 2722-10-70	HWY: COFFEE ROAD	COUNTY: WAUKESHA	CROSS SECTIONS: COFFEE RD	SHEET NO: . 285	E

FILE NAME : S:\Wauk_Co\NewBerlin\Gov\08.0099 Coffee Rd\Design\090201_XS_Coffee.dgn PLOT DATE : 10/30/2013 PLOT BY : Nick_B PLOT NAME : PLOT SCALE : 1:20

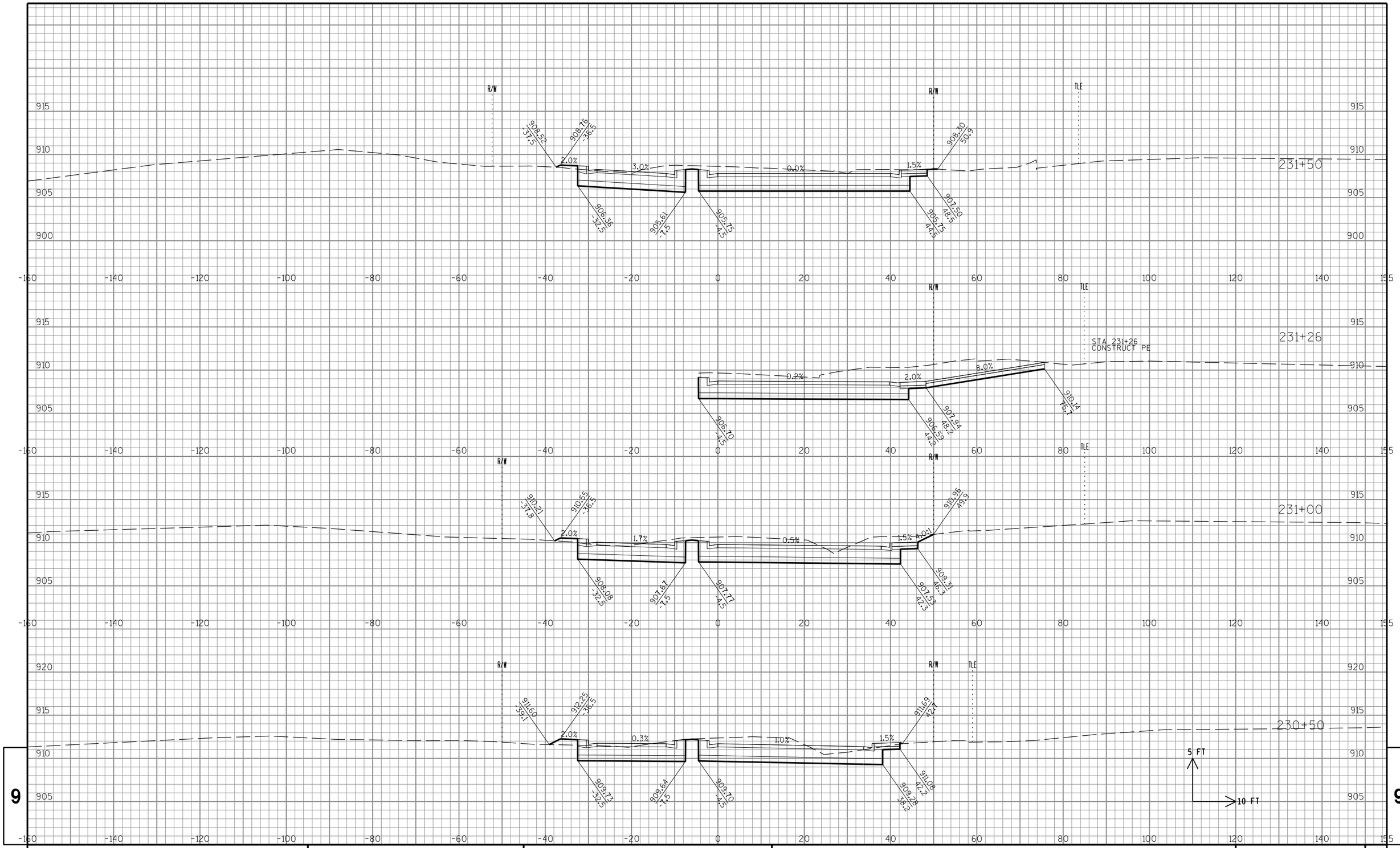

STATE PROJECT NO: 2722-10-70	HWY: COFFEE ROAD	COUNTY: WAUKESHA	CROSS SECTIONS: COFFEE RD	SHEET NO: . 286	E

FILE NAME : S:\Wauk_Co\NewBerlin\Gov\08.0099 Coffee Rd\Design\090201_XS_Coffee.dgn PLOT DATE : 10/30/2013 PLOT BY : Nick_B PLOT NAME : PLOT SCALE : 1:20

9 9

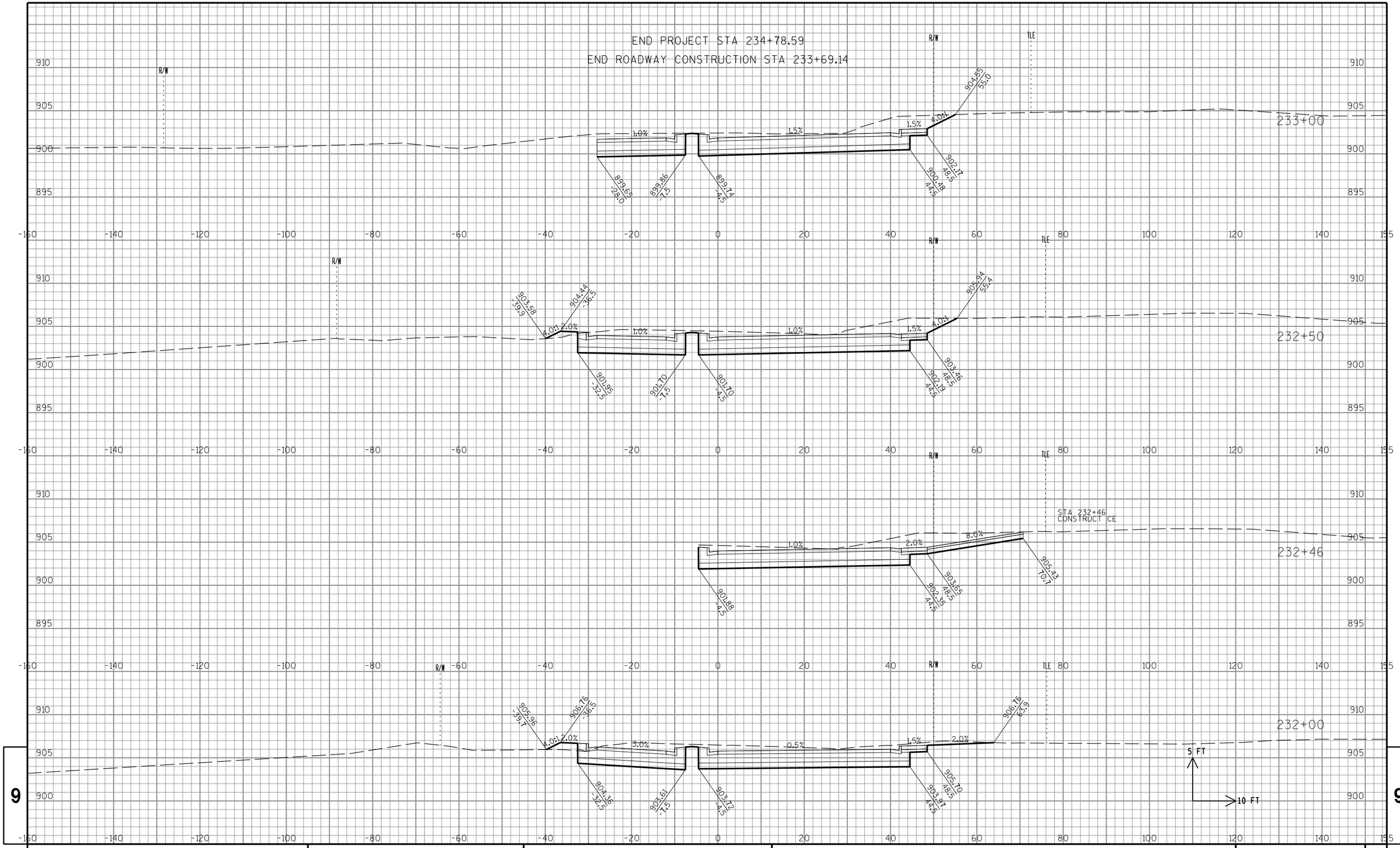

STATE PROJECT NO: 2722-10-70	HWY: COFFEE ROAD	COUNTY: WAUKESHA	CROSS SECTIONS: COFFEE RD	SHEET NO: . 287	E

FILE NAME : S:\Wauk_Co\NewBerlin\Gov\08.0099 Coffee Rd\Design\090201_XS_Coffee.dgn PLOT DATE : 10/30/2013 PLOT BY : Nick_B PLOT NAME : PLOT SCALE : 1:20

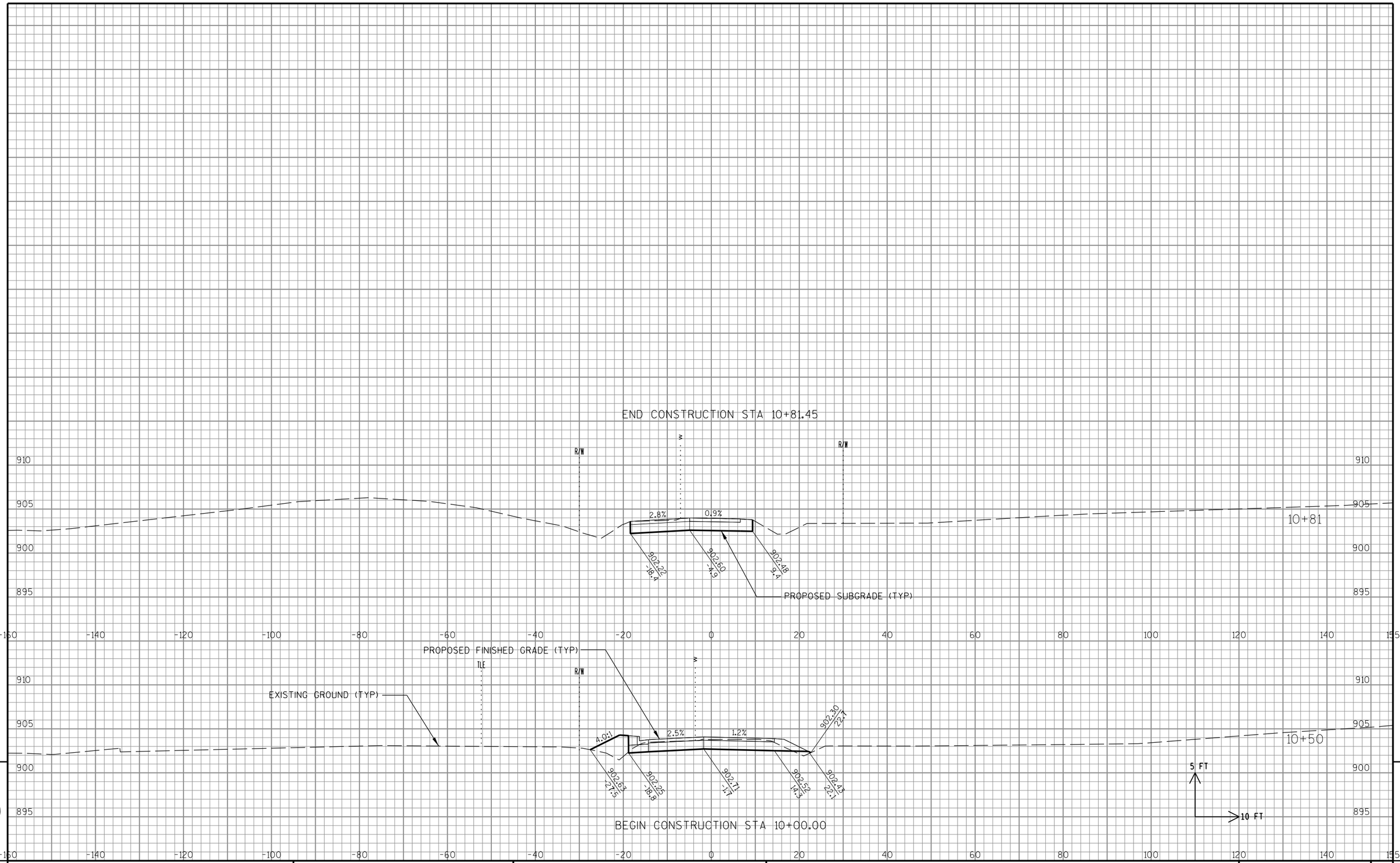

STATE PROJECT NO: 2722-10-70	HWY: COFFEE ROAD	COUNTY: WAUKESHA	CROSS SECTIONS: ST. FRANCIS DR	SHEET NO: . 288	E

FILE NAME : S:\Wauk_Co\NewBerlin\Gov\08.0099 Coffee Rd\Design\090202_XS_STFrancis.dgn PLOT DATE : 10/30/2013 PLOT BY : Nick_B PLOT NAME : PLOT SCALE : 1:20

9 9

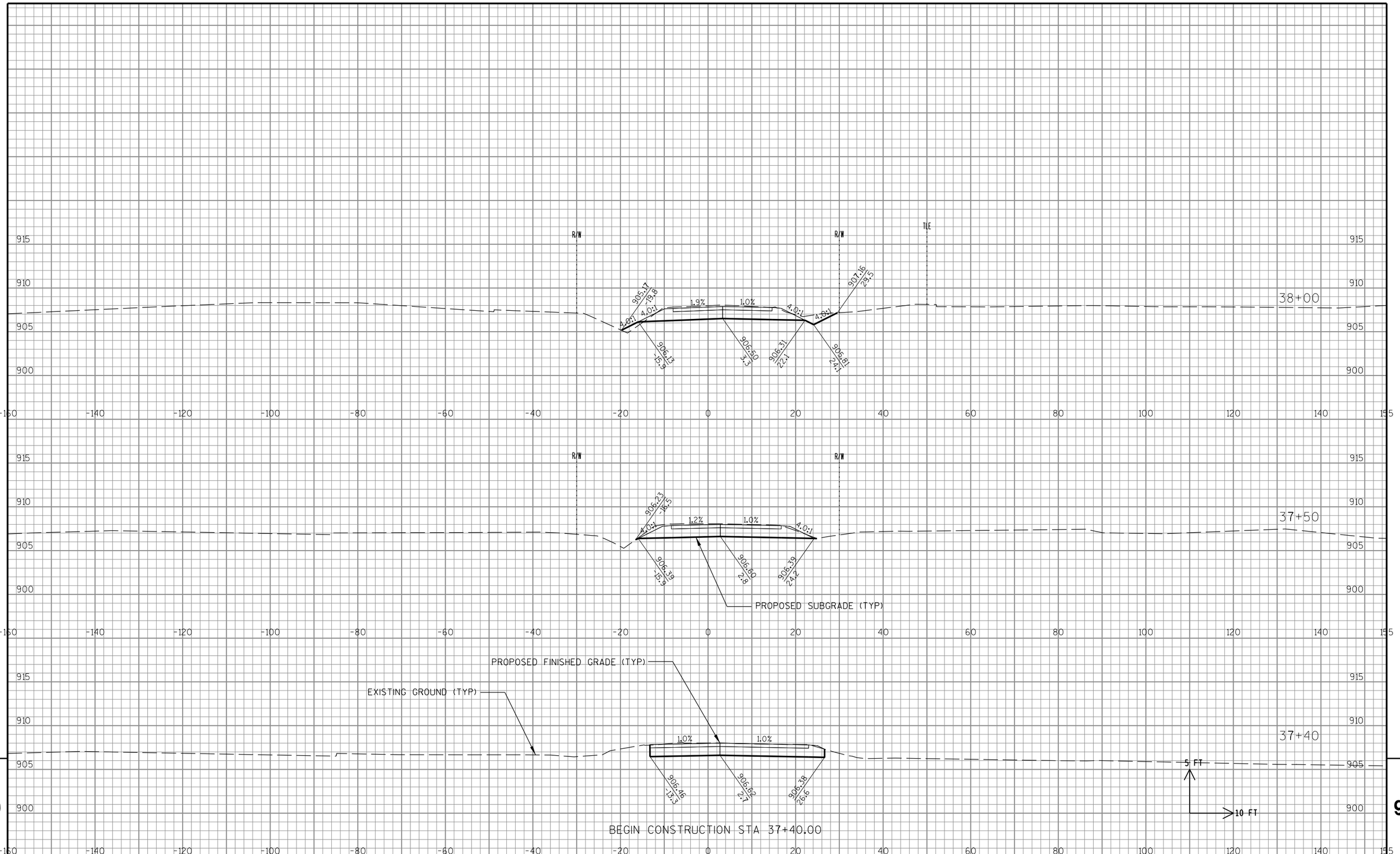

9

9

STATE PROJECT NO: 2722-10-70	HWY: COFFEE ROAD	COUNTY: WAUKESHA	CROSS SECTIONS: 159TH ST	SHEET NO: . 289	E

FILE NAME : S:\Wauk_Co\NewBerlin\Gov\08.0099 Coffee Rd\Design\090203_XS_159th.dgn PLOT DATE : 10/30/2013 PLOT BY : Nick_B PLOT NAME : PLOT SCALE : 1:20

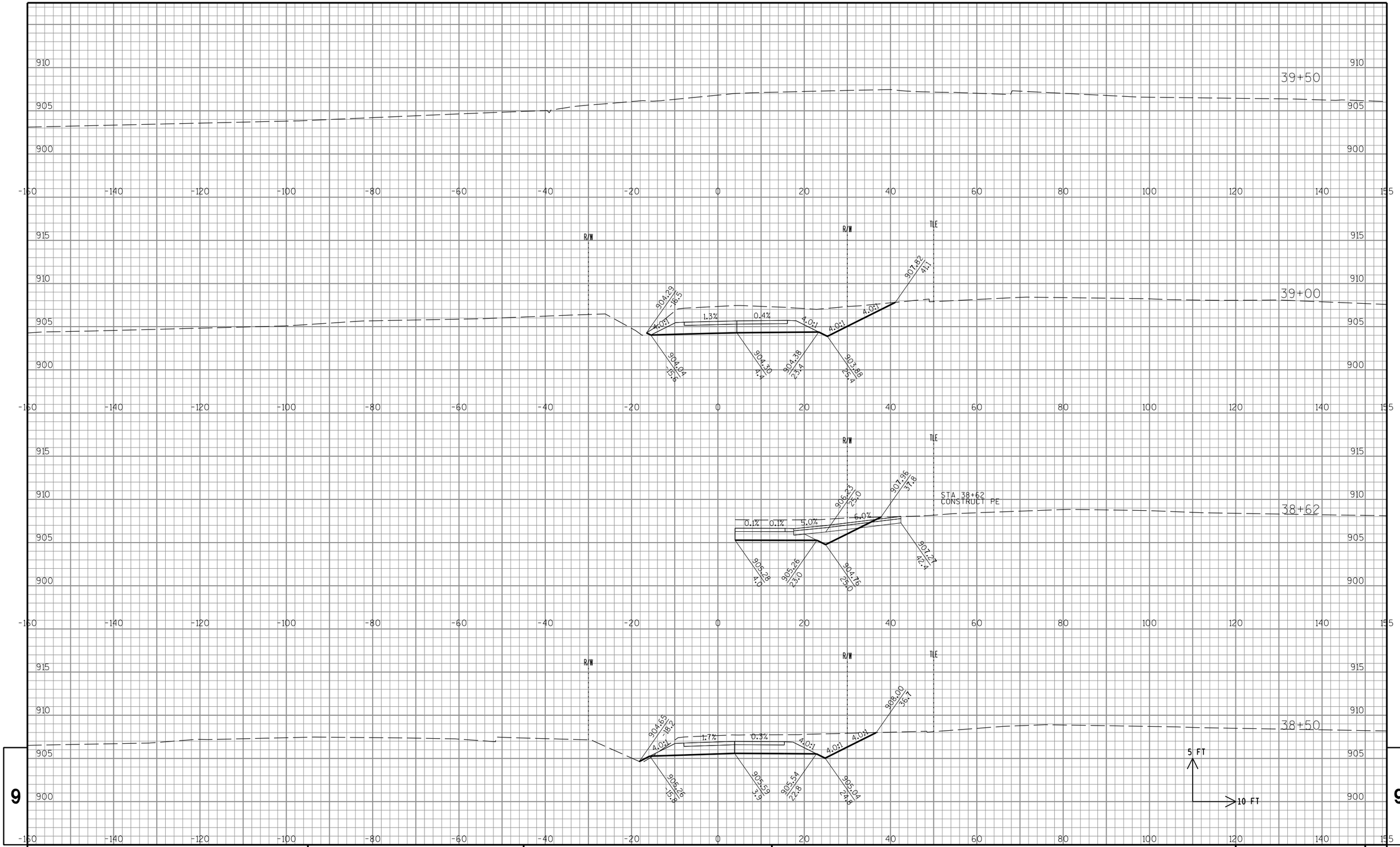

9

9

STATE PROJECT NO: 2722-10-70	HWY: COFFEE ROAD	COUNTY: WAUKESHA	CROSS SECTIONS: 159TH ST	SHEET NO: 290	E

FILE NAME : S:\Wauk_Co\NewBerlin\Gov\08.0099 Coffee Rd\Design\090203_XS_159th.dgn PLOT DATE : 10/30/2013 PLOT BY : Nick_B PLOT NAME : PLOT SCALE : 1:20

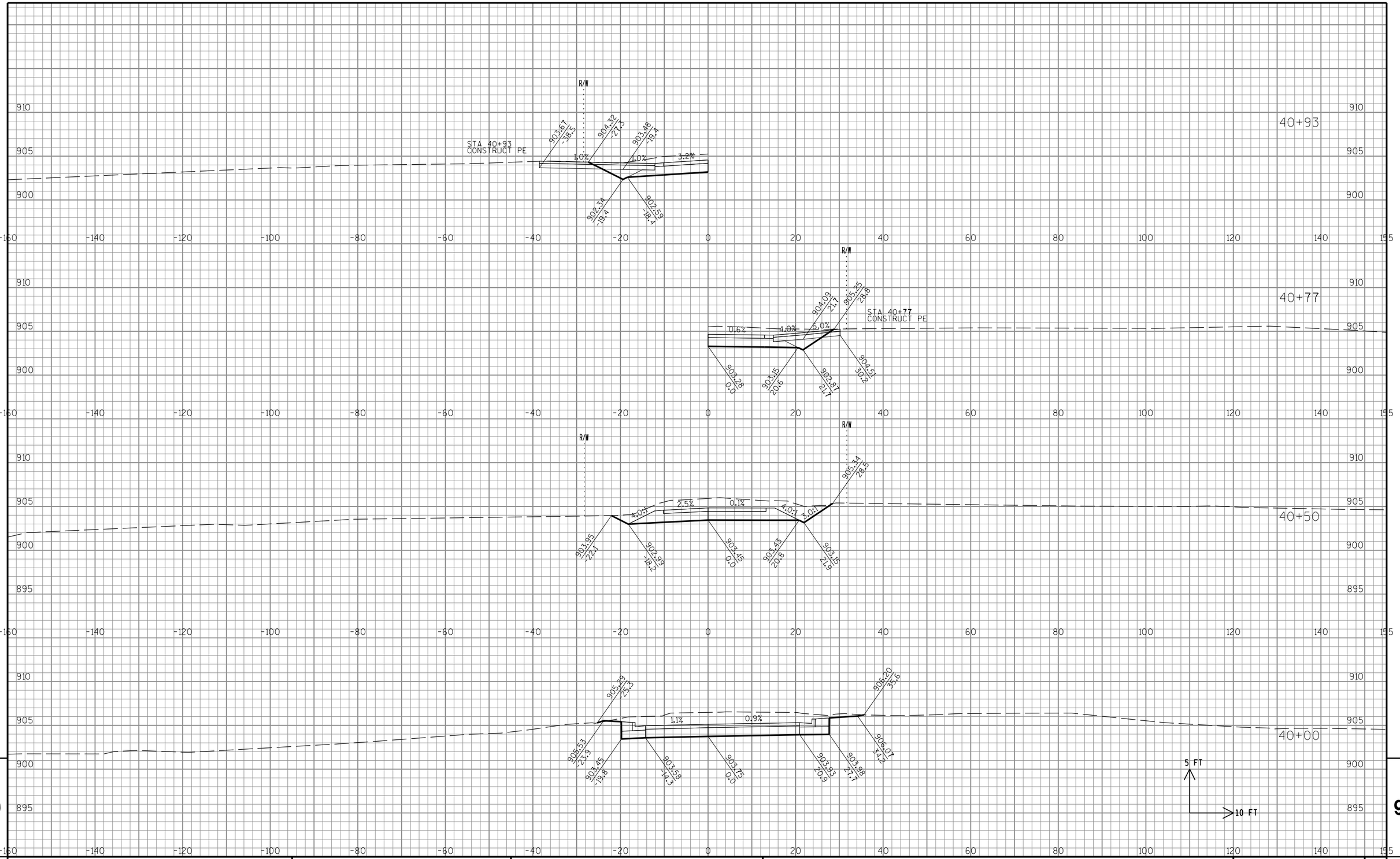

9

9

STATE PROJECT NO: 2722-10-70	HWY: COFFEE ROAD	COUNTY: WAUKESHA	CROSS SECTIONS: 159TH ST	SHEET NO: . 291	E

FILE NAME : S:\Wauk_Co\NewBerlin\Gov\08.0099 Coffee Rd\Design\090203_XS_159th.dgn PLOT DATE : 10/30/2013 PLOT BY : Nick_B PLOT NAME : PLOT SCALE : 1:20

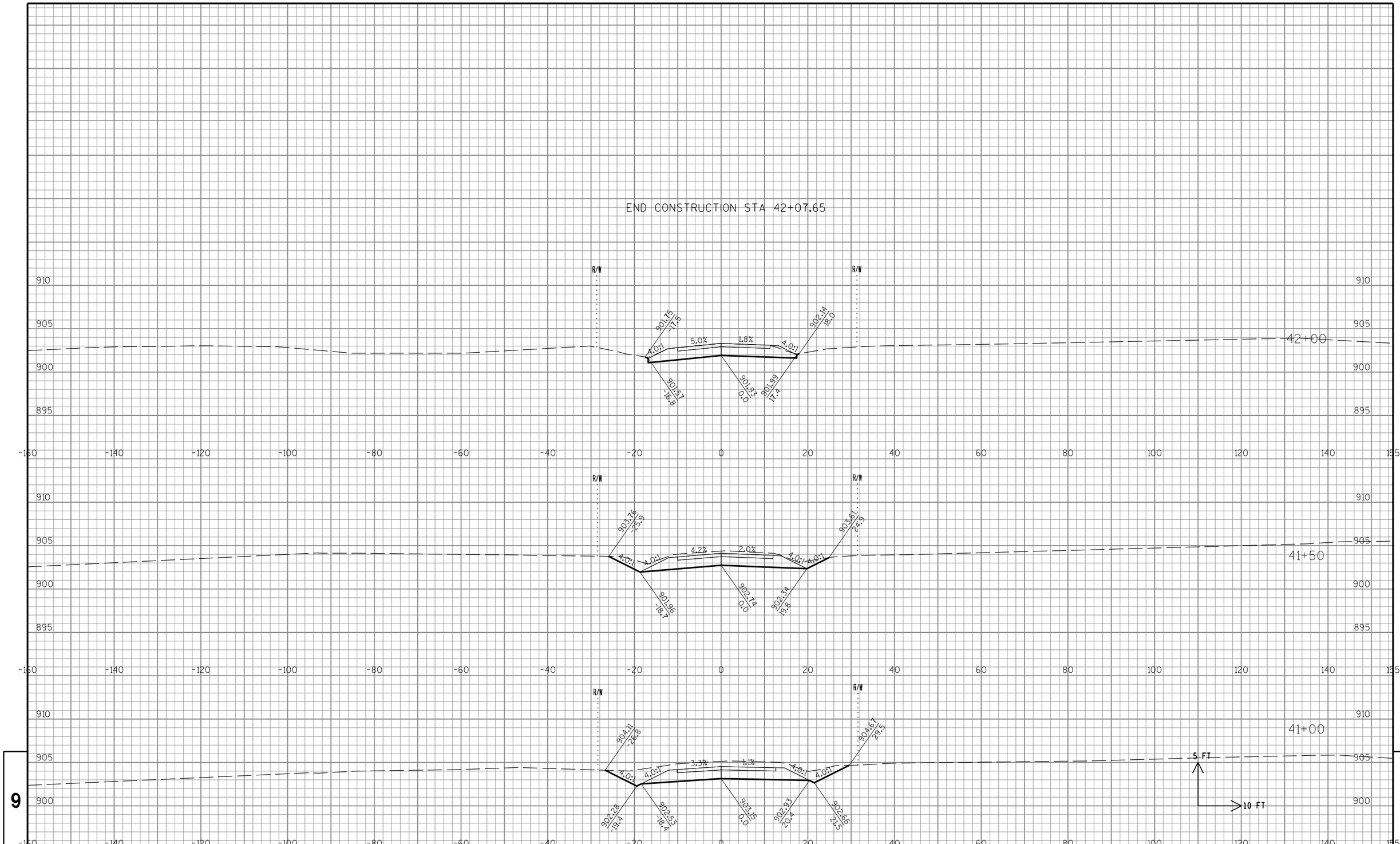

STATE PROJECT NO: 2722-10-70	HWY: COFFEE ROAD	COUNTY: WAUKESHA	CROSS SECTIONS: 159TH ST	SHEET NO: . 292	E

FILE NAME : S:\Wauk_Co\NewBerlin\Gov\08.0099 Coffee Rd\Design\090203_XS_159th.dgn PLOT DATE : 10/30/2013 PLOT BY : Nick_B PLOT NAME : PLOT SCALE : 1:20

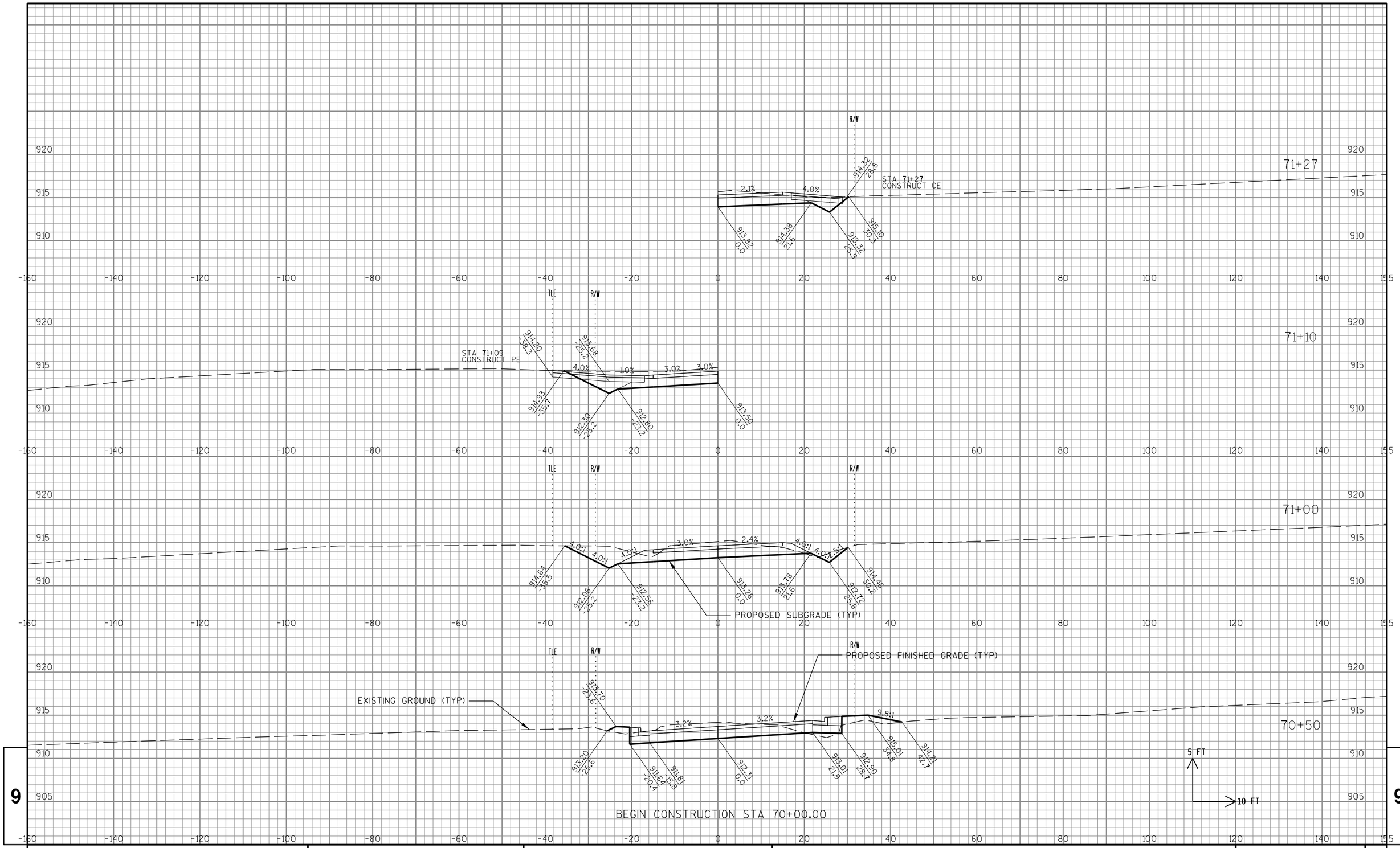

STATE PROJECT NO: 2722-10-70	HWY: COFFEE ROAD	COUNTY: WAUKESHA	CROSS SECTIONS: MONTEREY DR	SHEET NO: . 293	E

FILE NAME : S:\Wauk_Co\NewBerlin\Gov\08.0099 Coffee Rd\Design\090204_XS_Monterey.dgn PLOT DATE : 10/30/2013 PLOT BY : Nick_B PLOT NAME : PLOT SCALE : 1:20

9

9

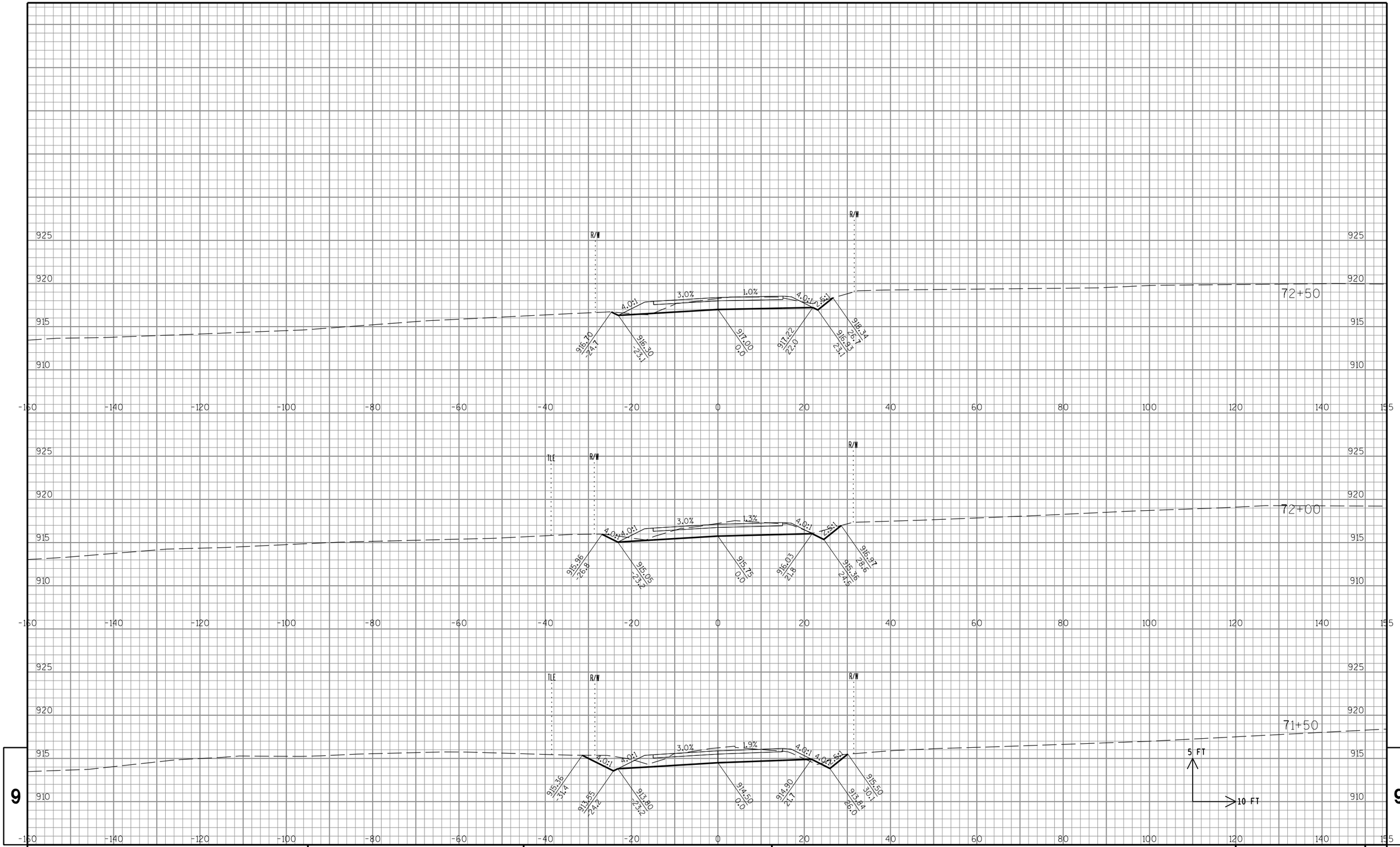

9

9

STATE PROJECT NO: 2722-10-70	HWY: COFFEE ROAD	COUNTY: WAUKESHA	CROSS SECTIONS: MONTEREY DR	SHEET NO: . 294	E

FILE NAME : S:\Wauk_Co\NewBerlin\Gov\08.0099 Coffee Rd\Design\090204_XS_Monterey.dgn PLOT DATE : 10/30/2013 PLOT BY : Nick_B PLOT NAME : PLOT SCALE : 1:20

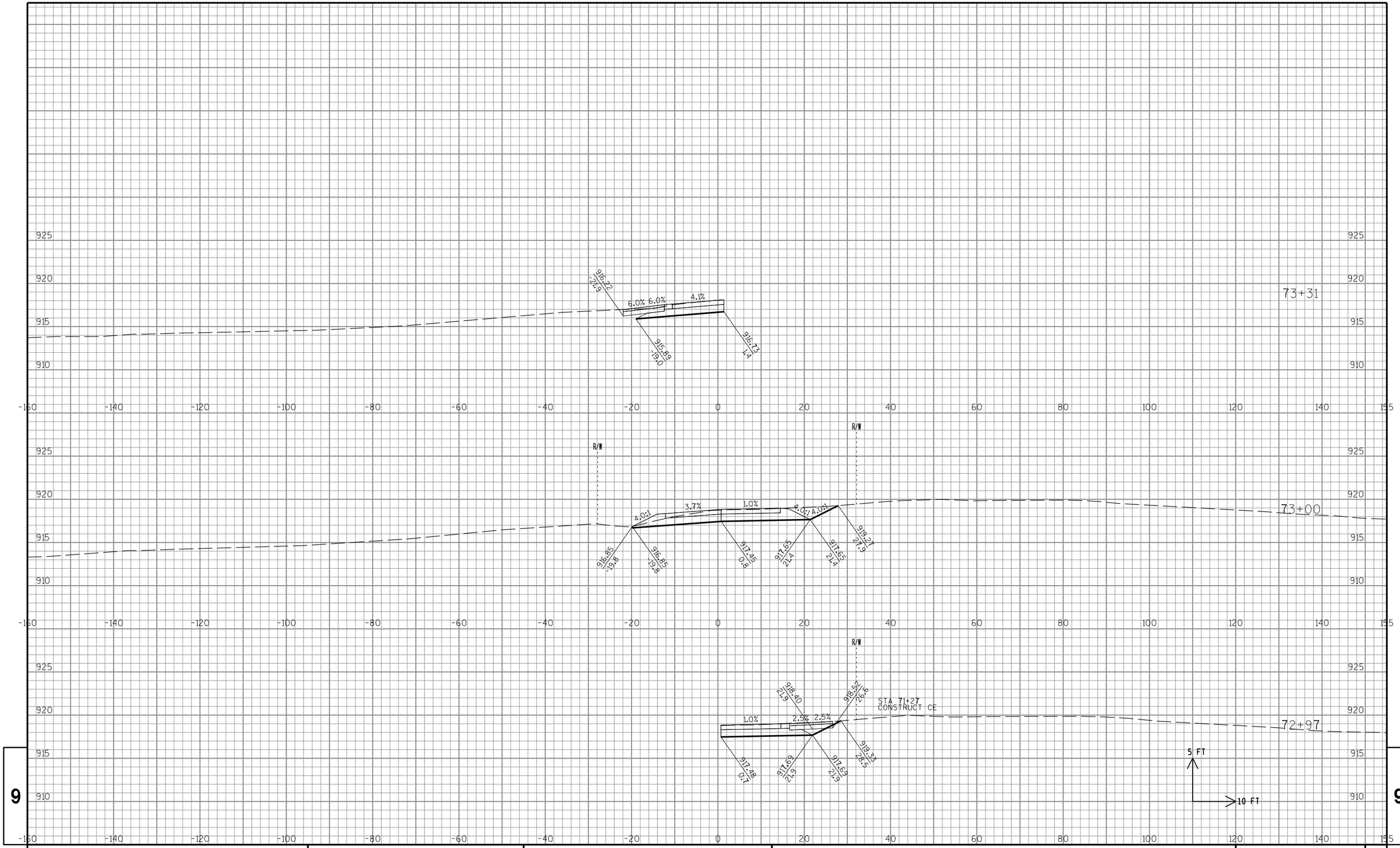

STATE PROJECT NO: 2722-10-70	HWY: COFFEE ROAD	COUNTY: WAUKESHA	CROSS SECTIONS: MONTEREY DR	SHEET NO: . 295	E

FILE NAME : S:\Wauk_Co\NewBerlin\Gov\08.0099 Coffee Rd\Design\090204_XS_Monterey.dgn PLOT DATE : 10/30/2013 PLOT BY : Nick_B PLOT NAME : PLOT SCALE : 1:20

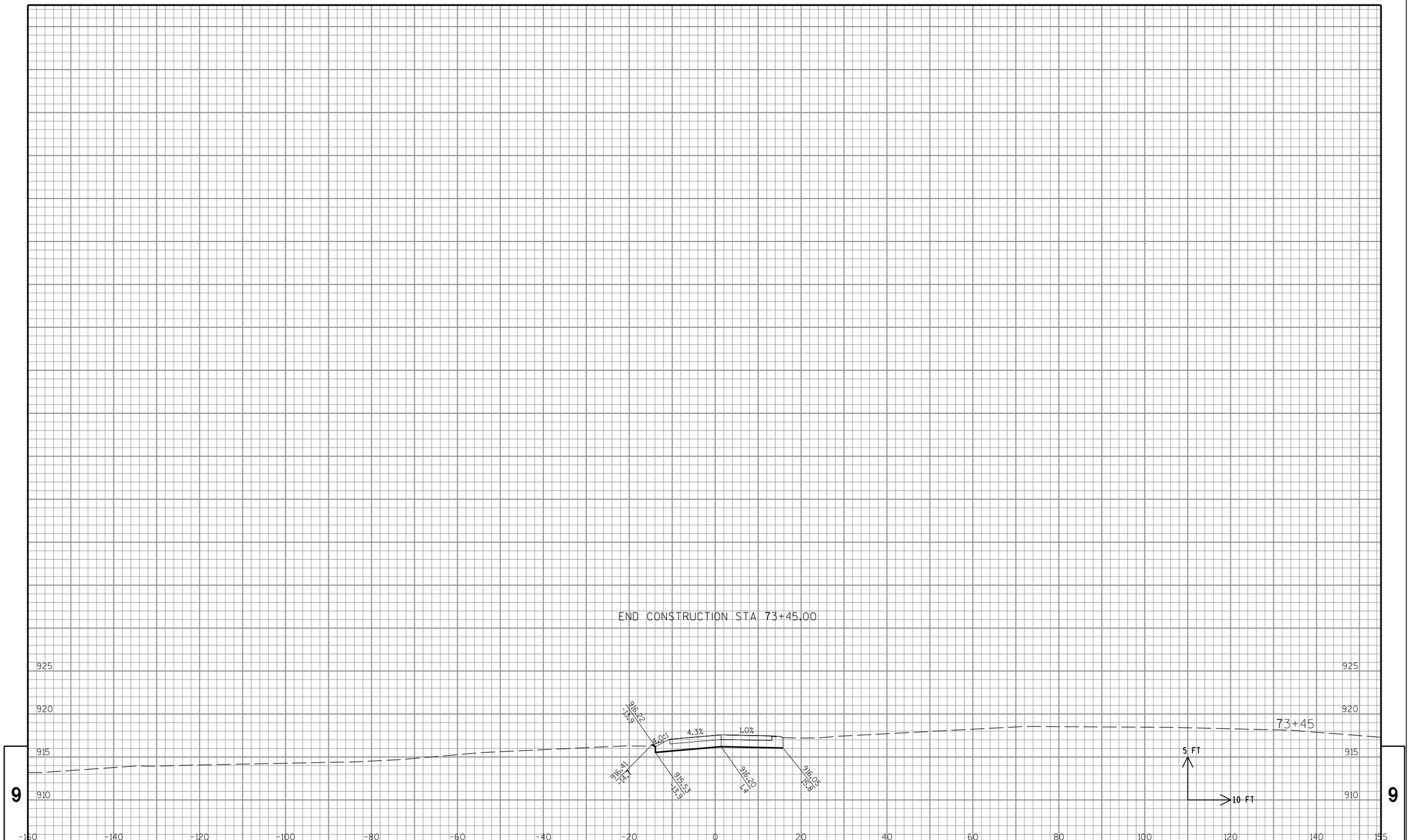

STATE PROJECT NO: 2722-10-70	HWY: COFFEE ROAD	COUNTY: WAUKESHA	CROSS SECTIONS: MONTEREY DR	SHEET NO: . 296	E

FILE NAME : S:\Wauk_Co\NewBerlin\Gov\08.0099 Coffee Rd\Design\090204_XS_Monterey.dgn PLOT DATE : 10/30/2013 PLOT BY : Nick_B PLOT NAME : PLOT SCALE : 1:20

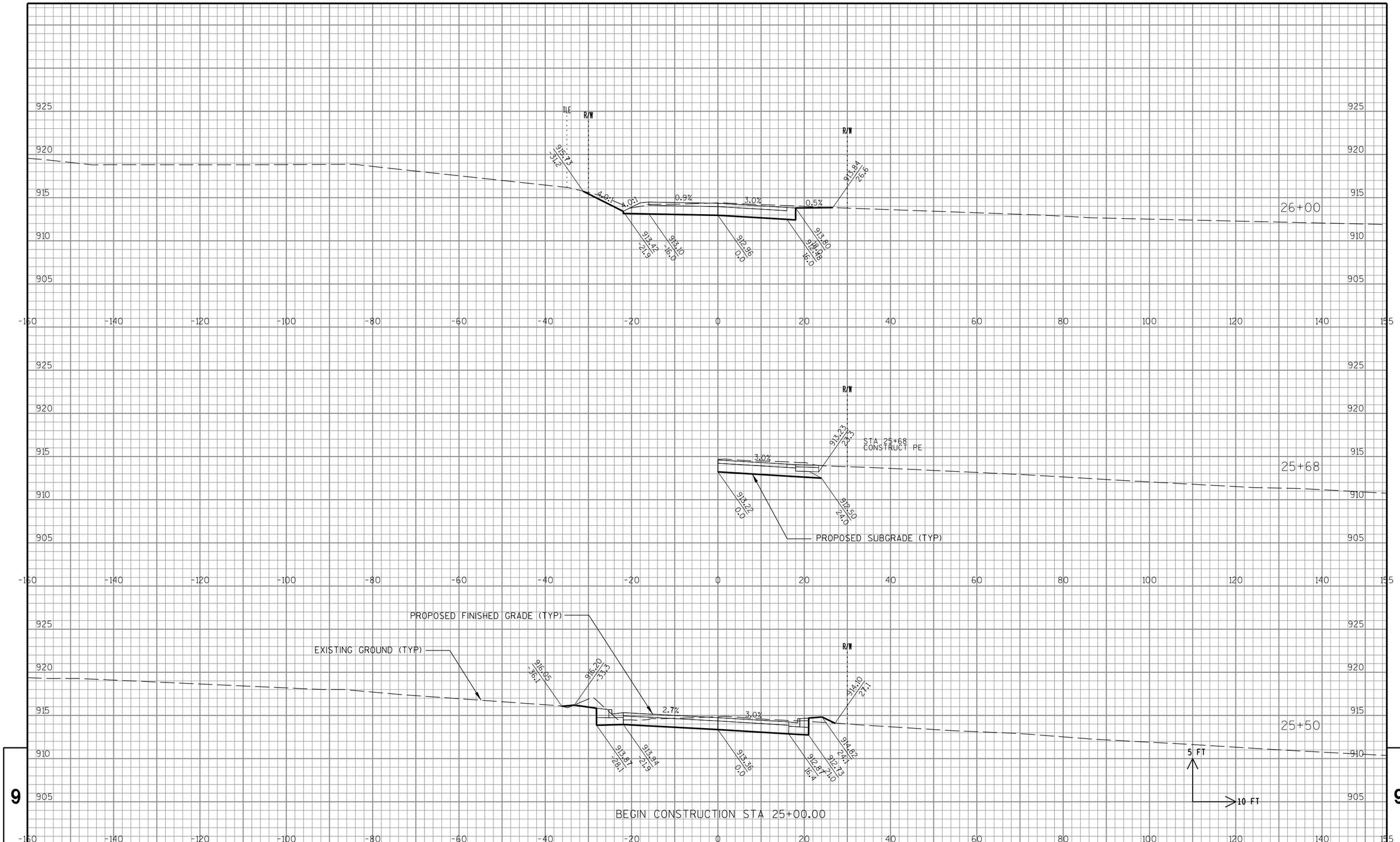

STATE PROJECT NO: 2722-10-70	HWY: COFFEE ROAD	COUNTY: WAUKESHA	CROSS SECTIONS: 153RD ST	SHEET NO: . 297	E

FILE NAME : S:\Wauk_Co\NewBerlin\Gov\08.0099 Coffee Rd\Design\090205_XS_153rd.DGN PLOT DATE : 10/30/2013 PLOT BY : Nick_B PLOT NAME : PLOT SCALE : 1:20

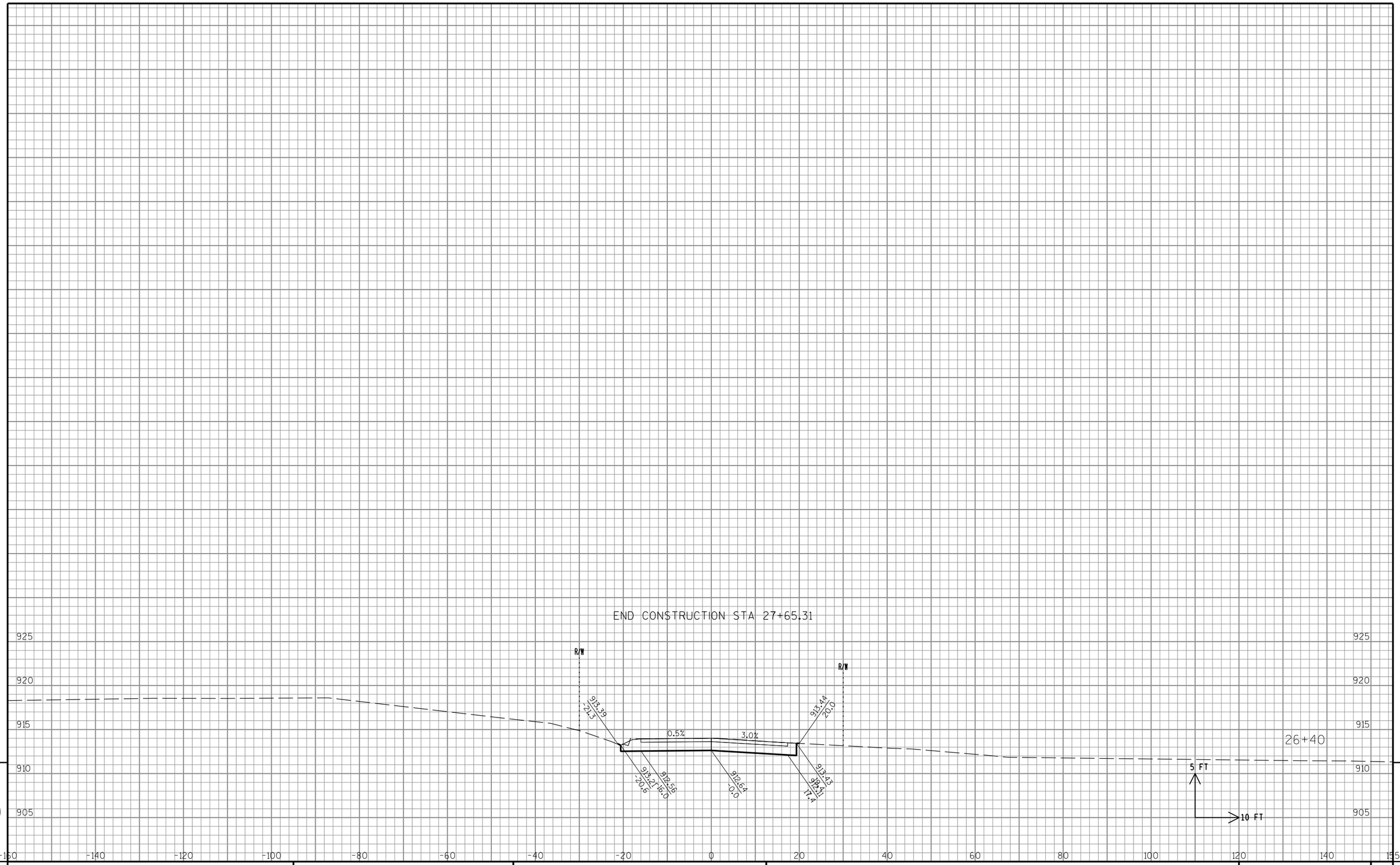

STATE PROJECT NO: 2722-10-70	HWY: COFFEE ROAD	COUNTY: WAUKESHA	CROSS SECTIONS: 153RD ST	SHEET NO: . 298	E

FILE NAME : S:\Wauk_Co\NewBerlin\Gov\08.0099 Coffee Rd\Design\090205_XS_153rd.DGN PLOT DATE : 10/30/2013 PLOT BY : Nick_B PLOT NAME : PLOT SCALE : 1:20

9 9

Notes

Wisconsin Department of Transportation

Dedicated people creating transportation solutions through innovation and exceptional service.

http://www.dot.wisconsin.gov