MAD DECEMBER 2013

PROJECT ID: 3042-00-73
WITH:

COUNTY: DODGE

ORDER OF SHEETS

TOTAL SHEETS = 216

STATE OF WISCONSIN
DEPARTMENT OF TRANSPORTATION

PLAN OF PROPOSED IMPROVEMENT

LOWELL - HARTFORD

(CTH P INTERSECTION)

STH 60
DODGE COUNTY

STATE PROJECT	FEDERAL PROJECT	
	PROJECT	CONTRACT
3042-00-73	WISC 2013507	1

STATE PROJECT NUMBER
3042-00-73

N

DESIGN DESIGNATION

		STH 60	CTH P
A.A.D.T. (2013)	=	9,300	3,000
A.A.D.T. (2033)	=	12,300	4,400
D.H.V.	=	10.6%	10.6%
D.D.	=	62/38	62/38
T.	=	12%	12%
DESIGN SPEED	=	60	60
ESALS	=	2,620,700	

CONVENTIONAL SYMBOLS

PLAN
- CORPORATE LIMITS
- PROPERTY LINE
- LOT LINE
- LIMITED HIGHWAY EASEMENT
- EXISTING RIGHT OF WAY
- PROPOSED OR NEW R/W LINE
- SLOPE INTERCEPT
- REFERENCE LINE
- EXISTING CULVERT
- PROPOSED CULVERT (Box or Pipe)
- COMBUSTIBLE FLUIDS — CAUTION
- MARSH AREA
- WOODED OR SHRUB AREA

PROFILE
- GRADE LINE
- ORIGINAL GROUND
- MARSH OR ROCK PROFILE (To be noted as such) — ROCK
- SPECIAL DITCH — LABEL
- GRADE ELEVATION — 95.36
- CULVERT (Profile View)

UTILITIES
- ELECTRIC — E
- FIBER OPTIC — FO
- GAS — G
- SANITARY SEWER — SAN
- STORM SEWER — SS
- TELEPHONE — T
- WATER — W
- UTILITY PEDESTAL
- POWER POLE
- TELEPHONE POLE

BEGIN PROJECT
STA. 100+00.00'EB'
Y = 675,554.996
X = 947,219.024

END CONSTRUCTION
STA. 217+04.32'NB'

END PROJECT
STA. 117+46.68'EB'

BEGIN CONSTRUCTION
STA. 199+00.00'NB'

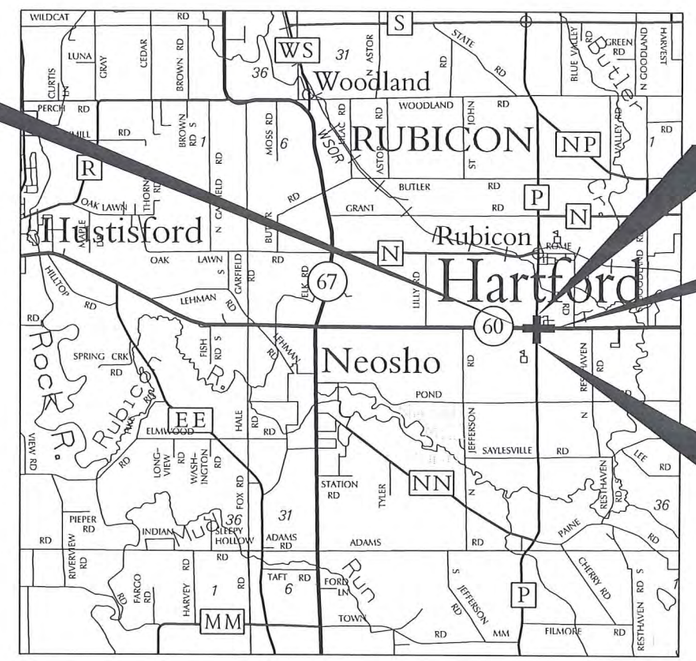

LAYOUT
SCALE 0 — 1 MI.

TOTAL NET LENGTH OF CENTERLINE = 0.331 MI.

-"ELEVATIONS SHOWN ON THIS PLAN ARE REFERENCED TO VERTICAL DATUM NAVD 88 (2007)."

-"COORDINATES ON THIS PLAN ARE REFERENCED TO THE WISCONSIN COUNTY COORDINATE SYSTEM (WCCS), DODGE COUNTY."

ORIGINAL PLANS PREPARED BY

GHD, Inc.,
5325 Wall Street, Suite 2305
T 608 249 4545 F 608 249 4402
E madison@ghd.com W www.ghd.com

WISCONSIN
RIELLY P. O'DONNELL
E-32011
MADISON, WI
PROFESSIONAL ENGINEER

DATE: 7/22/13 Rielly O'Donnell
(Professional Engineer)

STATE OF WISCONSIN
DEPARTMENT OF TRANSPORTATION

PREPARED BY

Surveyor	WisDOT SW REGION
Designer	GHD, INC.
Project Manager	LALITHA BALACHANDRAN
Regional Examiner	
Regional Supervisor	WILLIAM STROBEL
C.O. Examiner	

APPROVED FOR THE DEPARTMENT
DATE: 7/22/13 William Strobel
(Signature)

E

2

SECTION 2 ORDER OF SHEETS

DESIGN CONTACTS

RIELLY O'DONNELL
GHD
5325 WALL ST, SUITE 2305
MADISON, WI 53718
PHONE: (608) 216-2052
EMAIL: rielly.odonnell@ghd.com

LALITHA BALACHANDRAN
WISDOT SW REGION
2101 WRIGHT ST
MADISON, WI 53704
PHONE: (608) 243-3382
EMAIL: Lalitha.Balachandran@dot.wi.gov

DNR CONTACT

ERIC HEGGELUND
WISCONSIN DNR, SW REGION
3911 FISH HATCHERY RD
FITCHBURG, WI 53711
PHONE: (608) 275-3301
EMAIL: Eric.Hegglund@wisconsin.gov

UTILITY CONTACTS

JOEL OSTRENGA
AT&T WISCONSIN
2005 PEWAUKEE ROAD
WAUKESHA, WI 53188
PHONE: (262) 896-6527
EMAIL: Jo4761@att.com

ALAN SCHMITT
WE ENERGIES (ELECTRIC)
245 SAND DRIVE
WEST BEND, WI 53095
PHONE: (262) 338-7662
EMAIL: Alan.Schmitt@we-energies.com

RONALD FRASE
CHARTER COMMUNICATIONS
N 3760 CTH DJ
JUNEAU, WI 53039
PHONE: (920) 349-3202 X 103
EMAIL: ronald.frase@chartercom.com

JOSHUA JOHNSON
NEXTERA ENERGY SERVICES (BUTLER RIDGE WIND FARM)
W1724 ILLINOIS RD
MAYVILLE, WI 53050
PHONE: (920) 387-9256 EXT 2
EMAIL: Joshua.johnson@nexteraenergy.com
OR
STEVEN BUSS (FIELD CONTACT)
NEXTERA ENERGY SERVICES (BUTLER RIDGE WIND FARM)
4001 FELLAND RD, STE 108
MADISON, WI
PHONE: (920) 392-9684 EXT 2
EMAIL: sbuss@diversifiedenergy.com

PAUL OSMANSKI
WE ENERGIES (GAS)
500 SOUTH 116TH STREET
WEST ALLIS, WI 53214
PHONE: (414) 944-5796
EMAIL: Paul.Osmanski@we-energies.com

DAVID PIQUETT
CITY OF HARTFORD UTILITY DEPARTMENT
109 N MAIN ST
HARTFORD, WI 53027-1591
PHONE: (262) 673-2423
EMAIL: dpiquett@ci.hartford.wi.us

DIGGERS HOTLINE

Call 811 3 Work Days Before You Dig
or Toll Free (800) 242-8511
Hearing Impaired TDD (800) 542-2289
www.DiggersHotline.com

GENERAL NOTES

THE LOCATIONS OF EXISTING AND PROPOSED UTILITY INSTALLATIONS AS SHOWN ON THE PLANS ARE APPROXIMATE. THERE MAY BE OTHER UTILITY INSTALLATIONS WITHIN THE PROJECT AREA THAT ARE NOT SHOWN.

THE CONTRACTOR SHALL NOTIFY DIGGERS HOTLINE AND AFFECTED UTILITIES PRIOR TO THE START OF WORK.

THE LOCATIONS OF EROSION CONTROL ITEMS SHALL BE DETERMINED BY THE ENGINEER. ALL EROSION CONTROL MEASURES SHALL BE MAINTAINED UNTIL SUCH TIME AS THE ENGINEER DETERMINES THE MEASURE IS NO LONGER NECESSARY.

ALL DISTURBED AREAS WITHIN THE RIGHT-OF-WAY SHALL BE TOPSOILED, FERTILIZED, AND SEEDED AS DIRECTED BY THE ENGINEER.

RESTORATION OF EXPOSED SLOPES AND DITCHES SHALL TAKE PLACE 48 HOURS AFTER FINISHED GRADING IS COMPLETE.

TRAFFIC CONTROL DEVICES SHALL BE ADJUSTED TO FIT FIELD CONDITIONS AS DIRECTED BY THE ENGINEER.

CURB AND GUTTER GRADES ARE MEASURED AT THE FLANGE LINE.

CURB AND GUTTER RADII ARE MEASURED TO THE FACE OF THE CURB.

THE LOCATION OF STORM SEWER STRUCTURES REFERS TO THE CENTER OF THE STRUCTURE.

NO TREES OR SHRUBS ARE TO BE REMOVED UNLESS INDICATED FOR REMOVAL BY THE ENGINEER.

THE CONTRACTOR'S PAVING OPERATIONS SHALL BE CONSISTENT WITH THE PLAN TYPICAL SECTIONS AND CONSTRUCTED TO PREVENT HMA LONGITUDINAL JOINTS FROM BEING LOCATED WITHIN A DRIVING, TURNING, PASSING OR PARKING LANE.

HMA PAVEMENT WIEGHT CALCULATIONS ARE BASED ON 112 LB/SY/IN.

KEEP ALL EQUIPMENT AND MATERIALS OUT OF ENVIRONMENTALLY SENSITIVE AREAS. DO NOT PARK IN THESE AREAS.

APPROXIMATELY 250 TONS OF EXCAVATION, HAULING, AND DISPOSAL OF PETROLEUM CONTAMINATED SOIL IS ANTICIPATED. A COPY OF THE PHASE 2.5 HAZARDOUS MATERIALS SITE INVESTIGATION CAN BE ACQUIRED FROM:
DENNIS SIEWART OR DANIEL HACK
TRC SOLUTIONS
708 HEARTLAND TRAIL
SUITE 3000
MADISON, WI 53717
(608) 826-3600

GROUNDWATER MONITORING WELLS ARE EXPECTED TO BE ABANDONED PRIOR TO CONSTRUCTION. INFORMATION CAN BE INQUIRED FROM:
JASON POWELL
METCO
1421 STATE ROAD 16
LA CROSSE, WI 54601
(608) 781-8879

HMA E-10 PAVEMENT SHALL BE CONSTRUCTED WITH THE FOLLOWING LAYERS AND GRADATIONS:

TOTAL PAVEMENT DEPTH	LAYER DEPTH	MINIMAL NOMINAL SIZE	ASPHALTIC MATERIAL
5½ -INCH	2½ - INCH UPPER LAYER	12.5 MM	PG64-28
	3 - INCH LOWER LAYER	19.0 MM	PG58-28

NOTE: WITHOLD PLACEMENT OF UPPER LAYER ON STH 60 UNTIL STAGE 4

DESIGNER NOTES

DESIGN PLANS, SPECIFICATIONS, AND ESTIMATES FOR LIGHTING PROVIDED BY KL ENGINEERING.

ALL OTHER DESIGN PLANS, SPECIFICATIONS, AND ESTIMATES PROVIDED BY GHD.

END CONSTRUCTION
STA. 217+04.32 NB

CTH P

N

BEGIN PROJECT
STA. 100+00 EB
Y = 675,554.996
X = 947,219.024

END PROJECT
STA. 117+46.68 EB

STH 60

STH 60

BEGIN CONSTRUCTION
STA. 199+00 NB

CTH P

PROJECT NO:3042-00-73	HWY:STH 60	COUNTY:DODGE	PROJECT OVERVIEW	SHEET 3	E

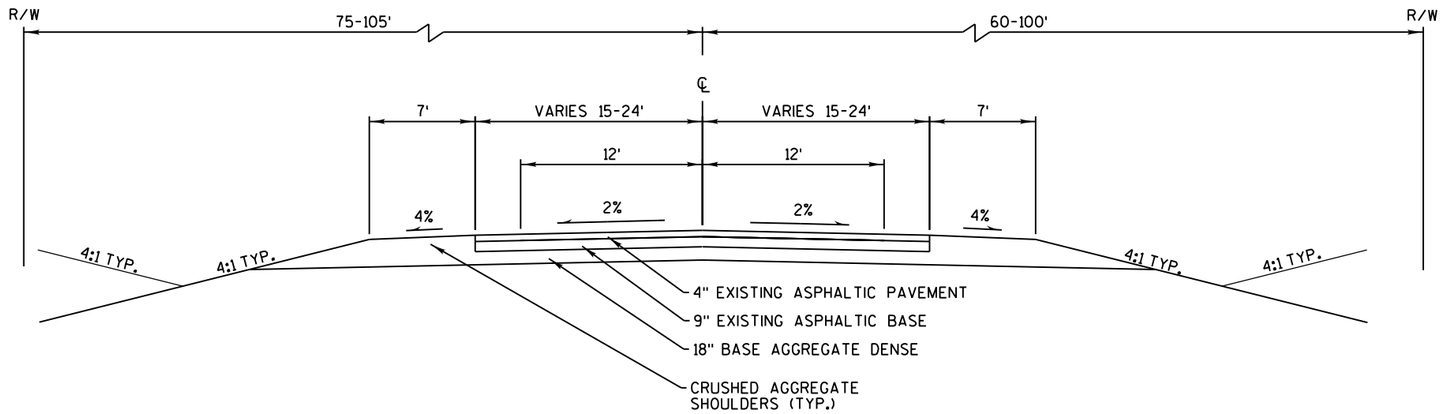

EXISTING TYPICAL SECTION

STH 60
STA 100+00'EB' - STA 117+47'EB'

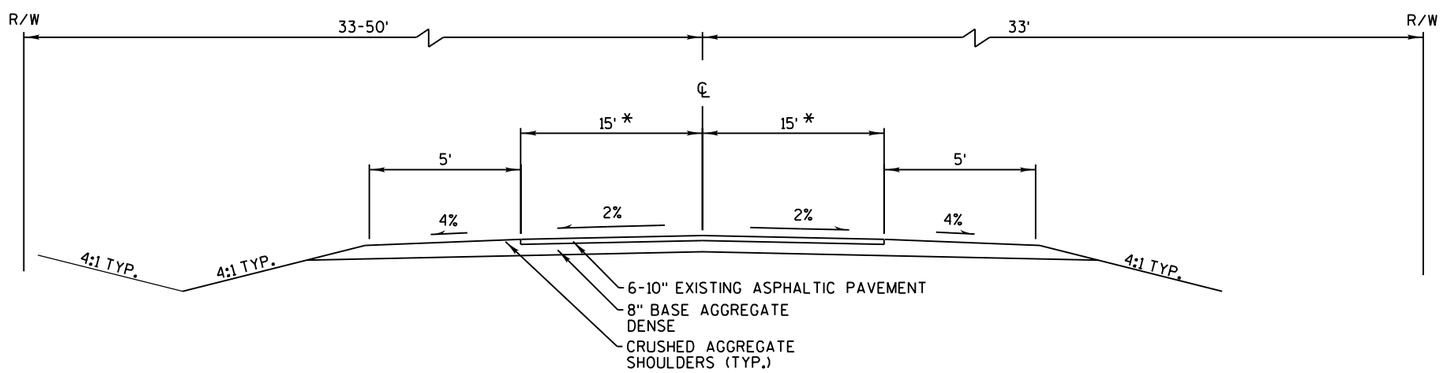

* LANES WIDEN AT INTERSECTION

EXISTING TYPICAL SECTION

CTH P
STA 199+00'NB' - STA 217+04'NB'

PROJECT NO:3042-00-73	HWY:STH 60	COUNTY:DODGE	EXISTING TYPICAL SECTIONS	SHEET 4	E

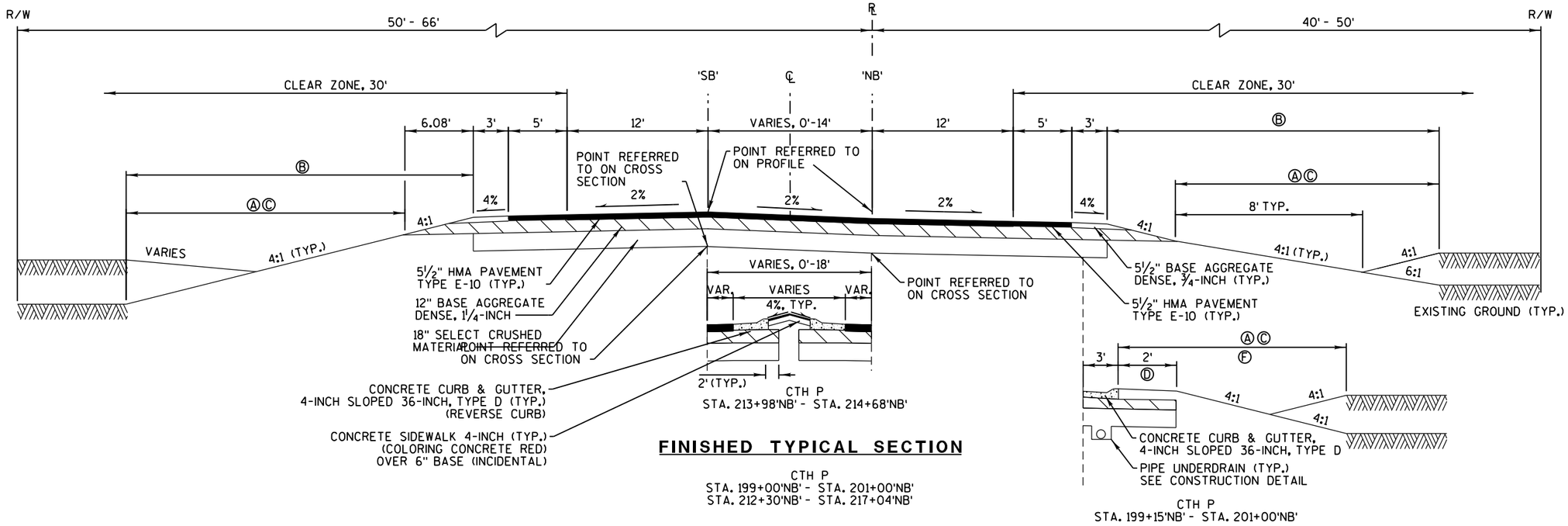

FINISHED TYPICAL SECTION

CTH P
STA. 199+00'NB' - STA. 201+00'NB'
STA. 212+30'NB' - STA. 217+04'NB'

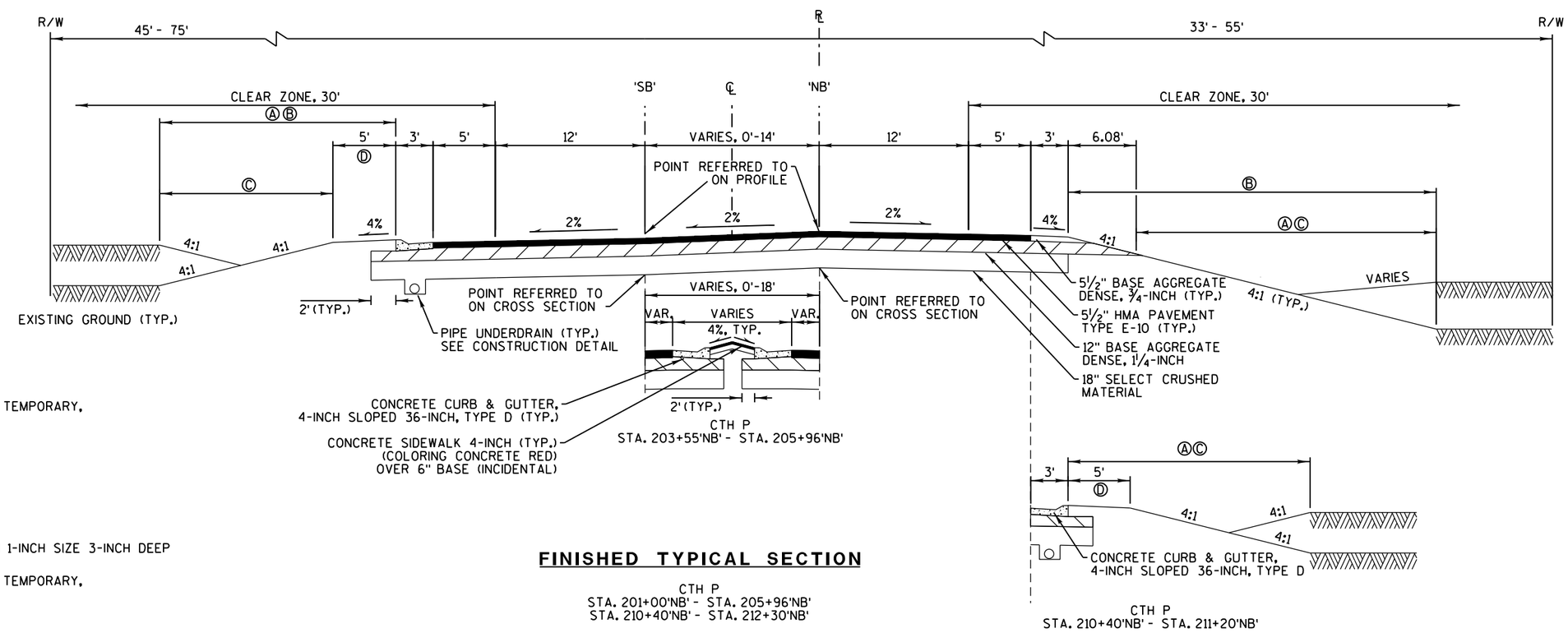

FINISHED TYPICAL SECTION

CTH P
STA. 201+00'NB' - STA. 205+96'NB'
STA. 210+40'NB' - STA. 212+30'NB'

LEGEND

- Ⓐ SEEDING MIXTURE #20, SEEDING TEMPORARY, AND FERTILIZER TYPE B
- Ⓑ MULCHING
- Ⓒ SALVAGED TOPSOIL
- Ⓓ EROSION MAT
- Ⓔ WEED BARRIER, AND ROCK MUCH 1-INCH SIZE 3-INCH DEEP
- Ⓕ SEEDING MIXTURE #40, SEEDING TEMPORARY, AND FERTILIZER TYPE B

PROJECT NO: 3042-00-73	HWY: STH 60	COUNTY: DODGE	FINISHED TYPICAL SECTIONS	SHEET 5	E

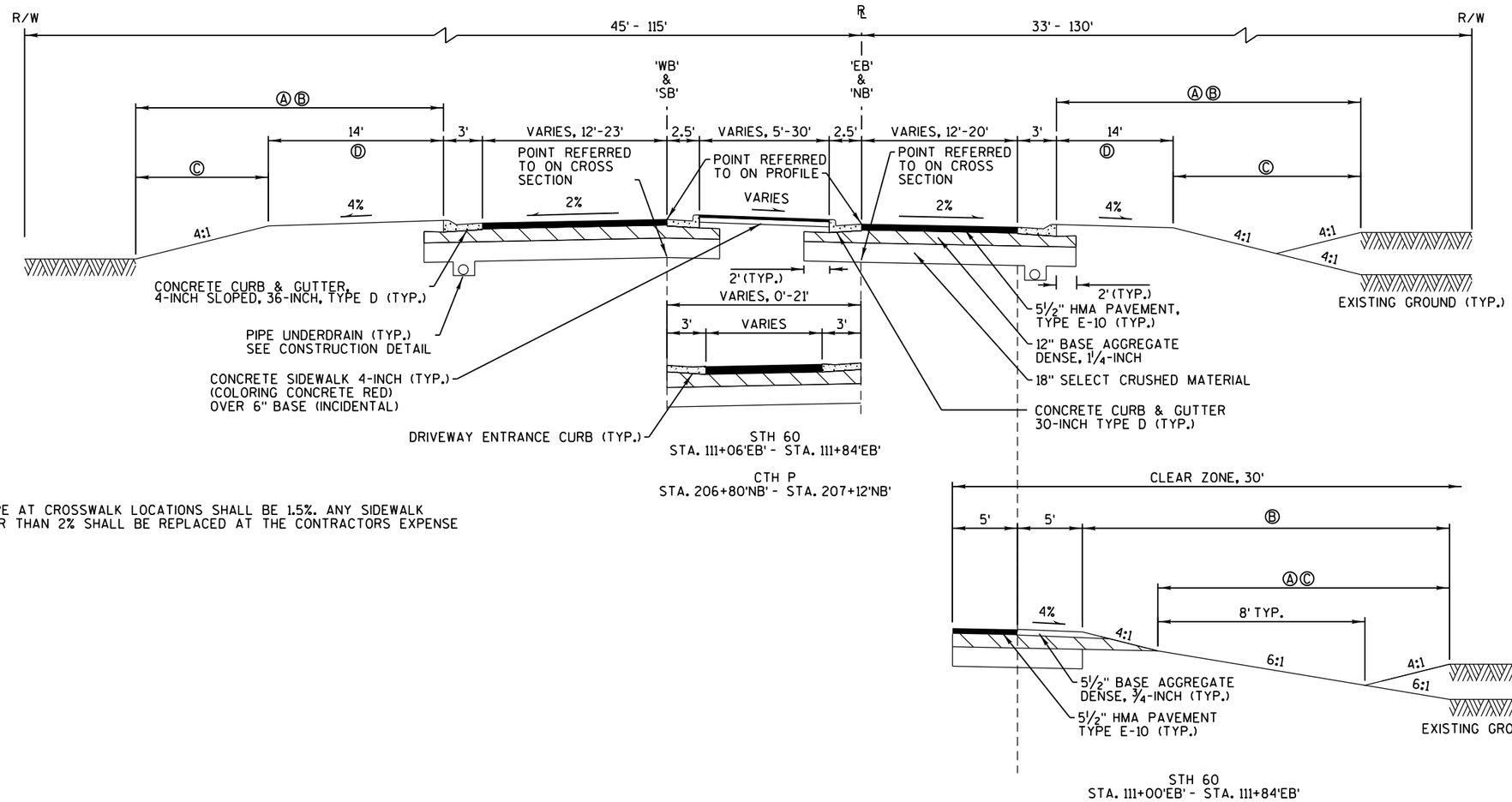

SIDEWALK SLOPE AT CROSSWALK LOCATIONS SHALL BE 1.5%. ANY SIDEWALK SLOPE GREATER THAN 2% SHALL BE REPLACED AT THE CONTRACTORS EXPENSE

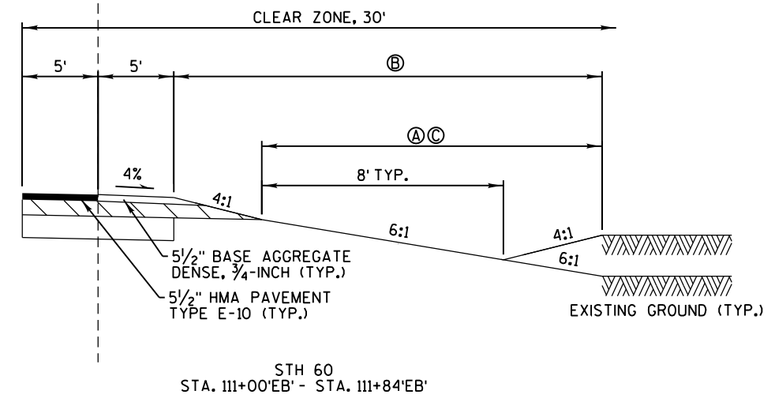

LEGEND

Ⓐ SEEDING MIXTURE #20, SEEDING TEMPORARY, AND FERTILIZER TYPE B

Ⓑ MULCHING

Ⓒ SALVAGED TOPSOIL

Ⓓ EROSION MAT

Ⓔ WEED BARRIER, AND ROCK MUCH 1-INCH SIZE 3-INCH DEEP

Ⓕ SEEDING MIXTURE #40, SEEDING TEMPORARY, AND FERTILIZER TYPE B

FINISHED TYPICAL SECTION

STH 60
STA. 106+62'EB' - STA. 108+35'EB'
STA. 109+78'EB' - STA. 111+84'EB'

CTH P
STA. 205+96'NB' - STA. 207+63'NB'
STA. 209+09'NB' - STA. 210+40'NB'

PROJECT NO: 3042-00-73	HWY: STH 60	COUNTY: DODGE	FINISHED TYPICAL SECTIONS	SHEET 6	E

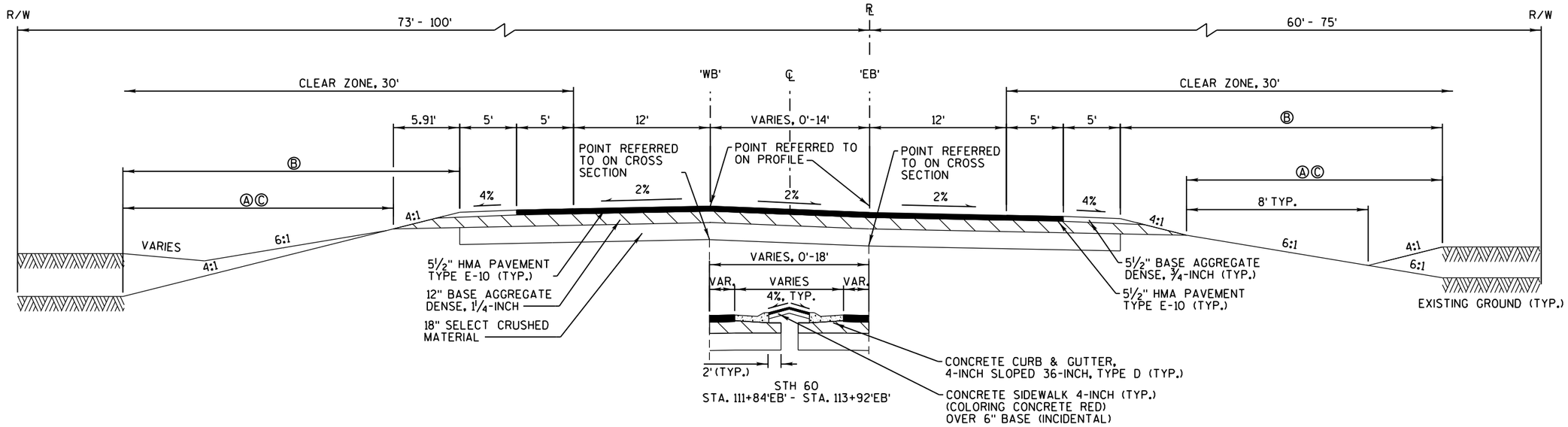

FINISHED TYPICAL SECTION

STH 60
STA. 100+00'EB' - STA. 102+50'EB'
STA. 111+84'EB' - STA. 117+47'EB'

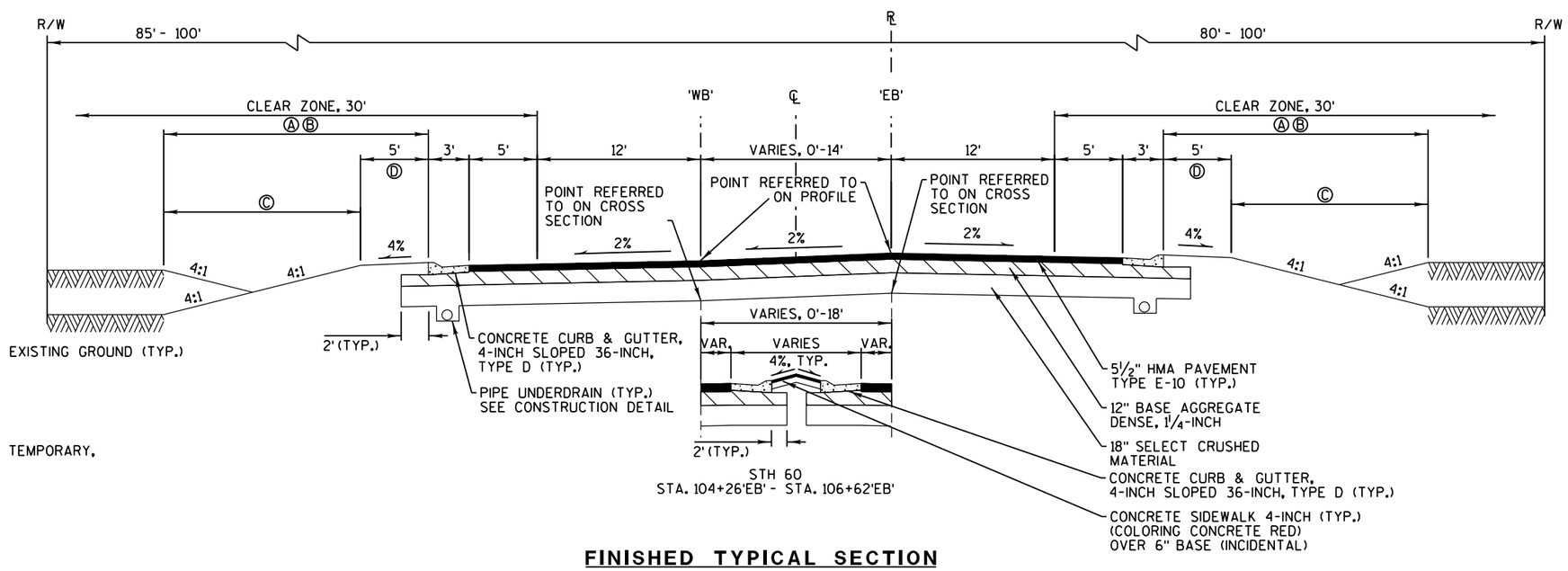

FINISHED TYPICAL SECTION

STH 60
STA. 102+50'EB' - STA. 106+62'EB'

LEGEND

- Ⓐ SEEDING MIXTURE #20, SEEDING TEMPORARY, AND FERTILIZER TYPE B
- Ⓑ MULCHING
- Ⓒ SALVAGED TOPSOIL
- Ⓓ EROSION MAT
- Ⓔ WEED BARRIER, AND ROCK MUCH 1-INCH SIZE 3-INCH DEEP
- Ⓕ SEEDING MIXTURE #40, SEEDING TEMPORARY, AND FERTILIZER TYPE B

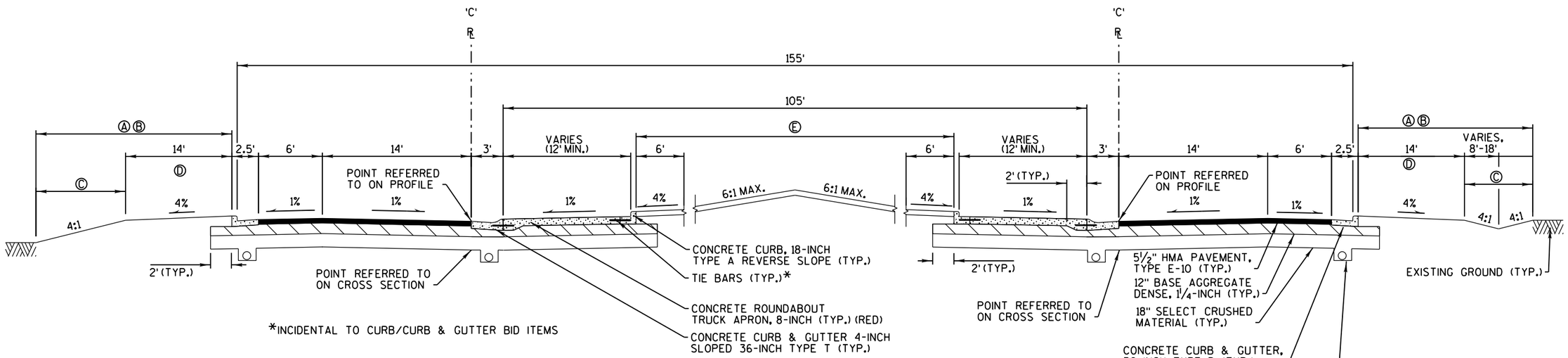

FINISHED TYPICAL SECTION

ROUNDABOUT
STA. 1+00'C' - STA. 4+45.58'C'

LEGEND

Ⓐ SEEDING MIXTURE #20, SEEDING TEMPORARY, AND FERTILIZER TYPE B

Ⓑ MULCHING

Ⓒ SALVAGED TOPSOIL

Ⓓ EROSION MAT

Ⓔ WEED BARRIER, AND ROCK MUCH 1-INCH SIZE 3-INCH DEEP

Ⓕ SEEDING MIXTURE #40, SEEDING TEMPORARY, AND FERTILIZER TYPE B

PROJECT NO: 3042-00-73	HWY: STH 60	COUNTY: DODGE	FINISHED TYPICAL SECTIONS	SHEET 8	E

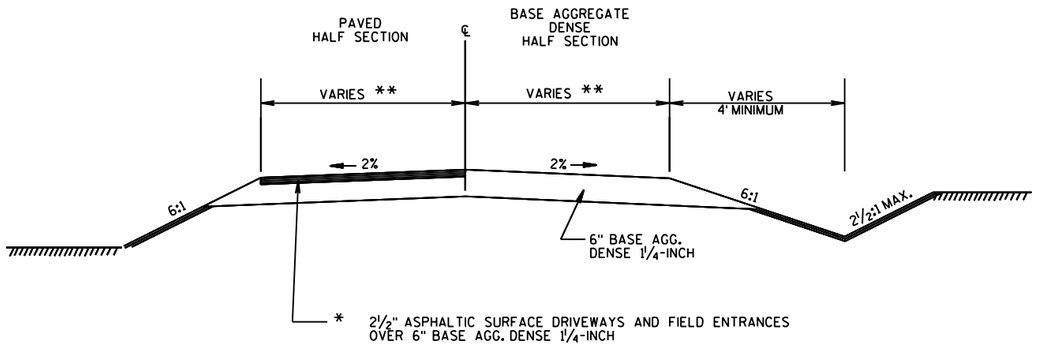

* OR MATCH EXISTING ASPHALT DEPTH

** SEE INTERSECTION DETAILS FOR EXACT LAYOUTS AND WIDTHS OF DRIVEWAYS.

TYPICAL SECTION FOR DRIVEWAYS

RUNOFF COEFFICIENT TABLE

	HYDROLOGIC SOIL GROUP											
	A			B			C			D		
	SLOPE RANGE (PERCENT)			SLOPE RANGE (PERCENT)			SLOPE RANGE (PERCENT)			SLOPE RANGE (PERCENT)		
LAND USE:	0-2	2-6	6 & OVER	0-2	2-6	6 & OVER	0-2	2-6	6 & OVER	0-2	2-6	6 & OVER
ROW CROPS	.08 .22	.16 .30	.22 .38	.12 .26	.20 .34	.27 .44	.15 .30	.24 .37	.33 .50	.19 .34	.28 .41	.38 .56
MEDIAN STRIP-TURF	.19 .24	.20 .26	.24 .30	.19 .25	.22 .28	.26 .33	.20 .26	.23 .30	.30 .37	.20 .27	.25 .32	.30 .40
SIDE SLOPE-TURF			.25 .32			.27 .34			.28 .36			.30 .38
PAVEMENT:												
ASPHALT	.70 - .95											
CONCRETE	.80 - .95											
BRICK	.70 - .80											
DRIVES, WALKS	.75 - .85											
ROOFS	.75 - .95											
GRAVEL ROADS, SHOULDERS	.40 - .60											

TOTAL PROJECT AREA = 12.04 ACRES
TOTAL AREA EXPECTED TO BE DISTURBED BY CONSTRUCTION ACTIVITIES = 8.31 ACRES

2

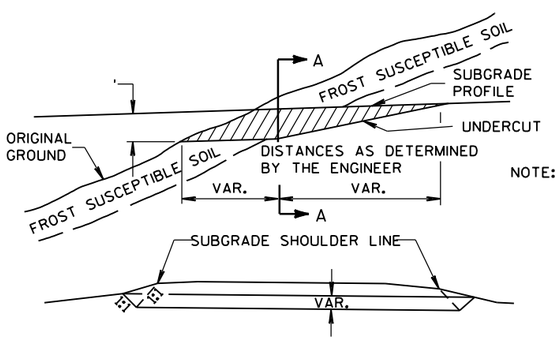

SECTION A-A

CROSS SECTION SHOWING UNDERCUT

DETAIL FOR EXCAVATION BELOW SUBGRADE AT CUTS

NOTE: EXACT LOCATIONS AND EXTENT OF E.B.S. SECTIONS SHALL BE DETERMINED BY THE ENGINEER IN THE FIELD.

E.B.S. AREA TO BE BACKFILLED WITH SELECT CRUSHED MATERIAL

BACKFILL MUST BE HOMOGENEOUS WITH ADJOINING FILL MATERIAL.

THE FILL SECTION WITHIN 100' OF THE MOUTH OF THE CUT MUST BE KEPT 2' BELOW SUBGRADE UNTIL E.B.S. IS COMPLETED.

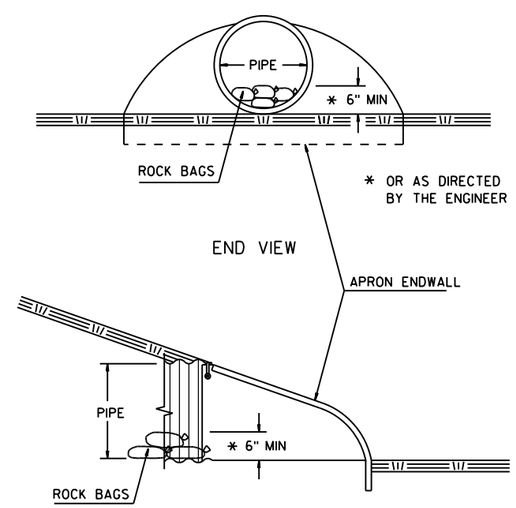

SIDE VIEW

CULVERT PIPE CHECKS

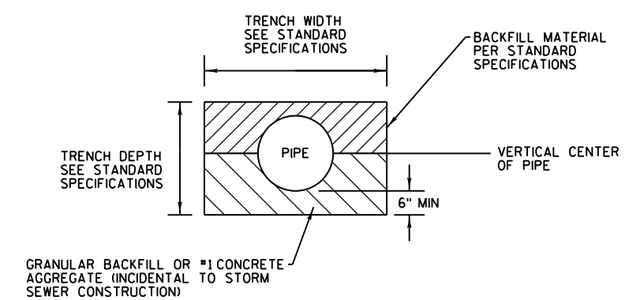

STORM SEWER TRENCH DETAIL

2

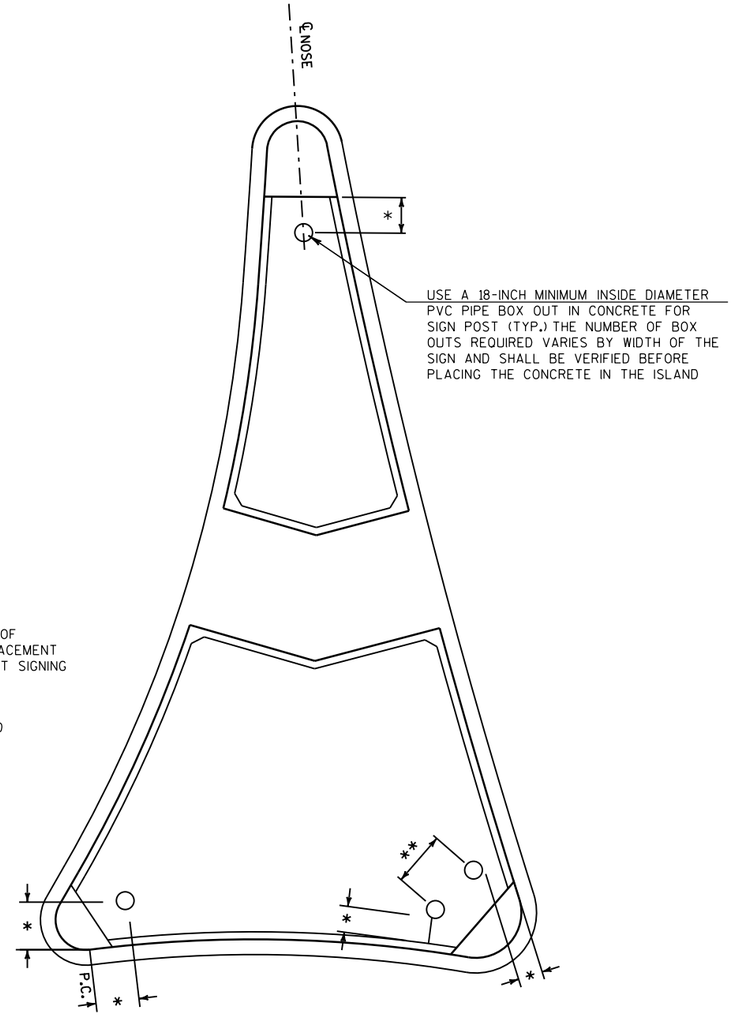

NOTIFY THE PROJECT ENGINEER A MINIMUM OF 2-WEEKS PRIOR TO THE NEED FOR SIGN PLACEMENT TO ALLOW FOR STAKING OF ANY PERMANENT SIGNING REQUIRED ON THE PROJECT.

* DISTANCE TO BE LAID OUT IN THE FIELD BASED ON SIGN SIZE. TWO FOOT MINIMUM CLEARANCE BETWEEN THE EDGE OF SIGN AND THE FACE OF CURB.

**SEE SIGN DETAILS FOR POST SPACING.

ISLAND SIGN LOCATION DETAIL (TYP.)

NOTES:

1. TROWEL ISLAND NOSE TO A SMOOTH FINISH.
2. TRUNCATED DOMES IN DETECTABLE WARNING FIELD ALIGNED IN A ROW AND PARALLEL TO THE CROSSWALK.
3. JOINT SPACING TO BE DETERMINED IN FIELD.

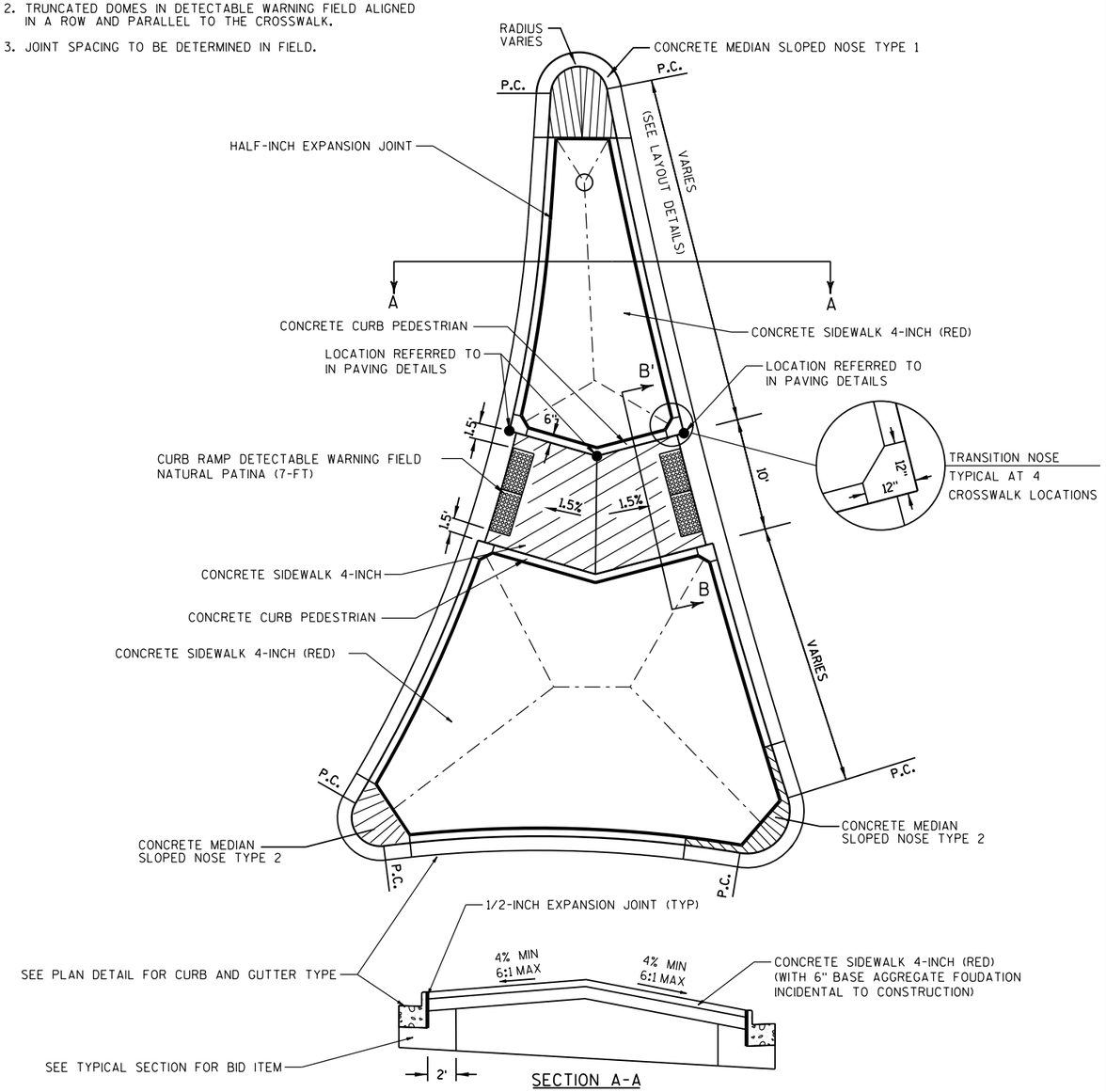

SPLITTER ISLAND DETAIL (TYP.)

2

PROJECT NO:3042-00-73	HWY:STH 60	COUNTY:DODGE	CONSTRUCTION DETAILS	SHEET 10	E

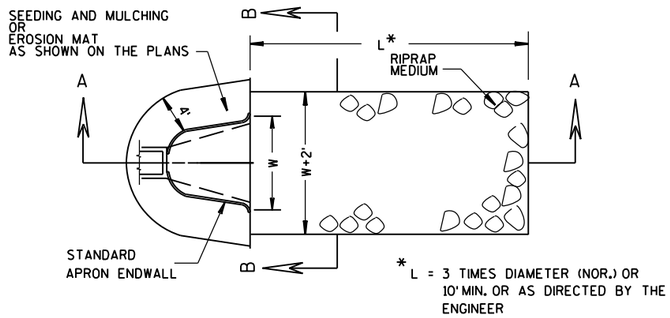

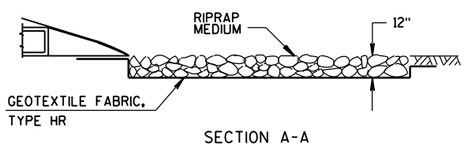

SECTION A-A

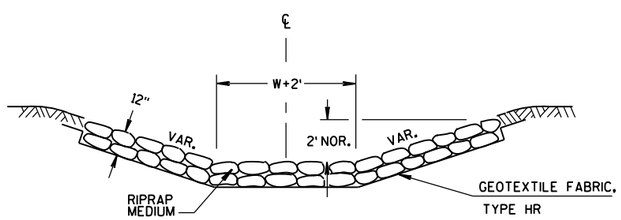

SECTION B-B

RIPRAP AND GEOTEXTILE FABRIC DETAIL AT APRON ENDWALLS

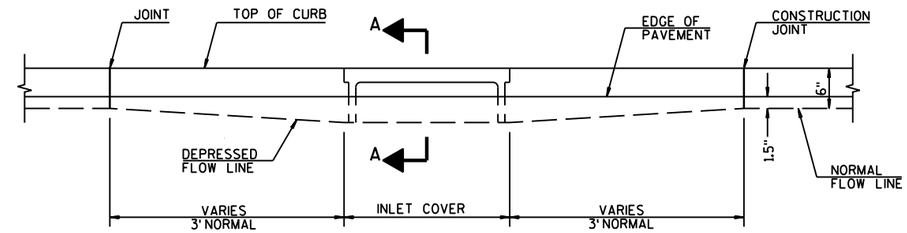

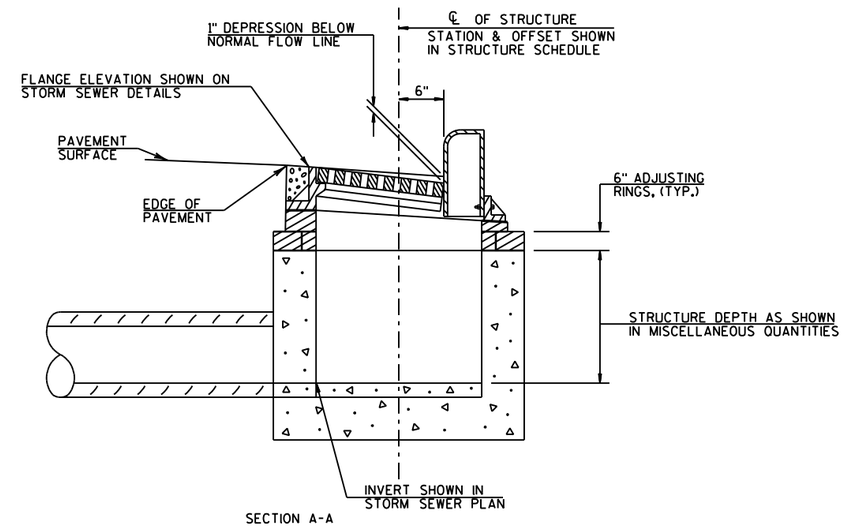

SECTION A-A

DETAIL OF CURB AND GUTTER AT INLETS

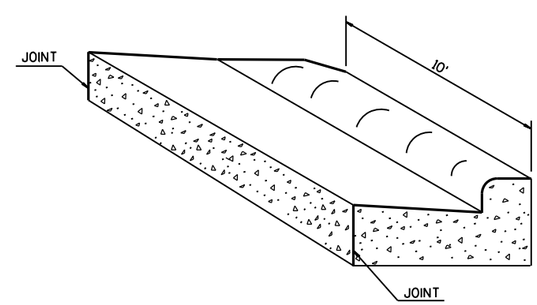

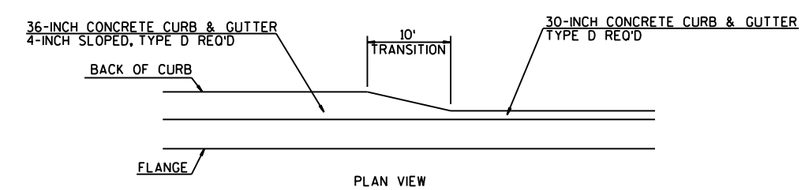

CONCRETE CURB & GUTTER TRANSITION DETAILS

36-INCH CONCRETE CURB & GUTTER, 4-INCH SLOPED, TYPE D TO 30-INCH CONCRETE CURB & GUTTER, TYPE D (TO BE MEASURED AND PAID FOR AS 36-INCH CONCRETE CURB & GUTTER, 4-INCH SLOPED, TYPE D)

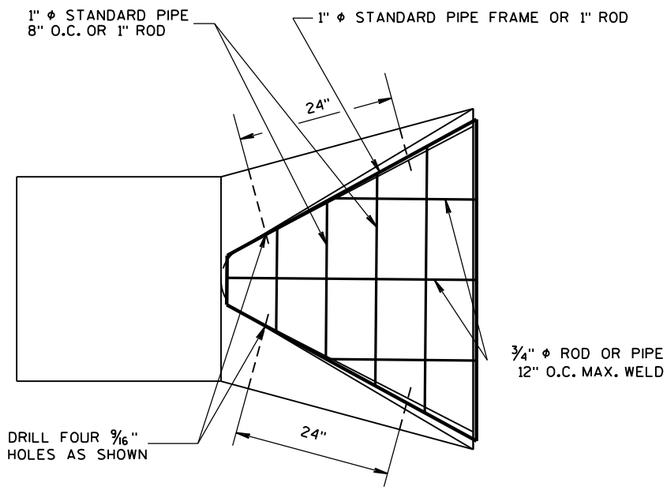

AT EACH PIPE

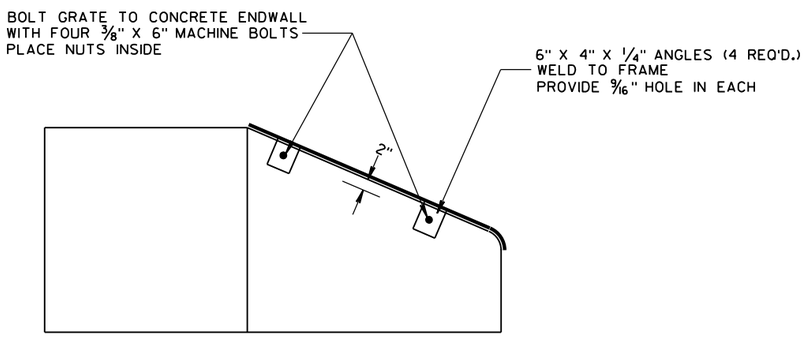

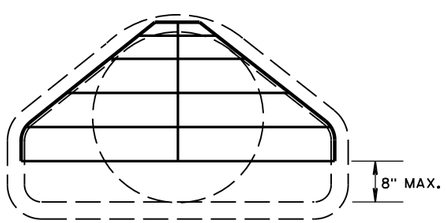

PIPE GRATE DETAIL

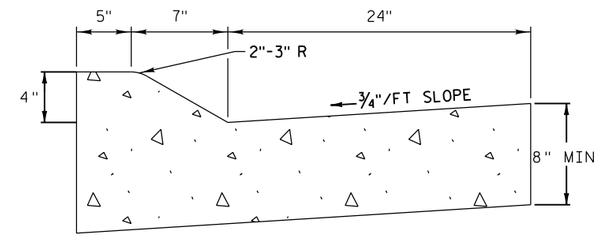

DETAIL FOR CONCRETE CURB & GUTTER,
4-INCH SLOPED 36-INCH TYPE D MODIFIED

NOTE: PLACE 6" BASE AGGREGATE DENSE 1 1/4-INCH AND 18" SELECT CRUSHED MATERIAL CONCRETE PAVEMENT 8-INCH. EXTEND TWO FEET BEYOND OUTSIDE EDGE OF PAD.

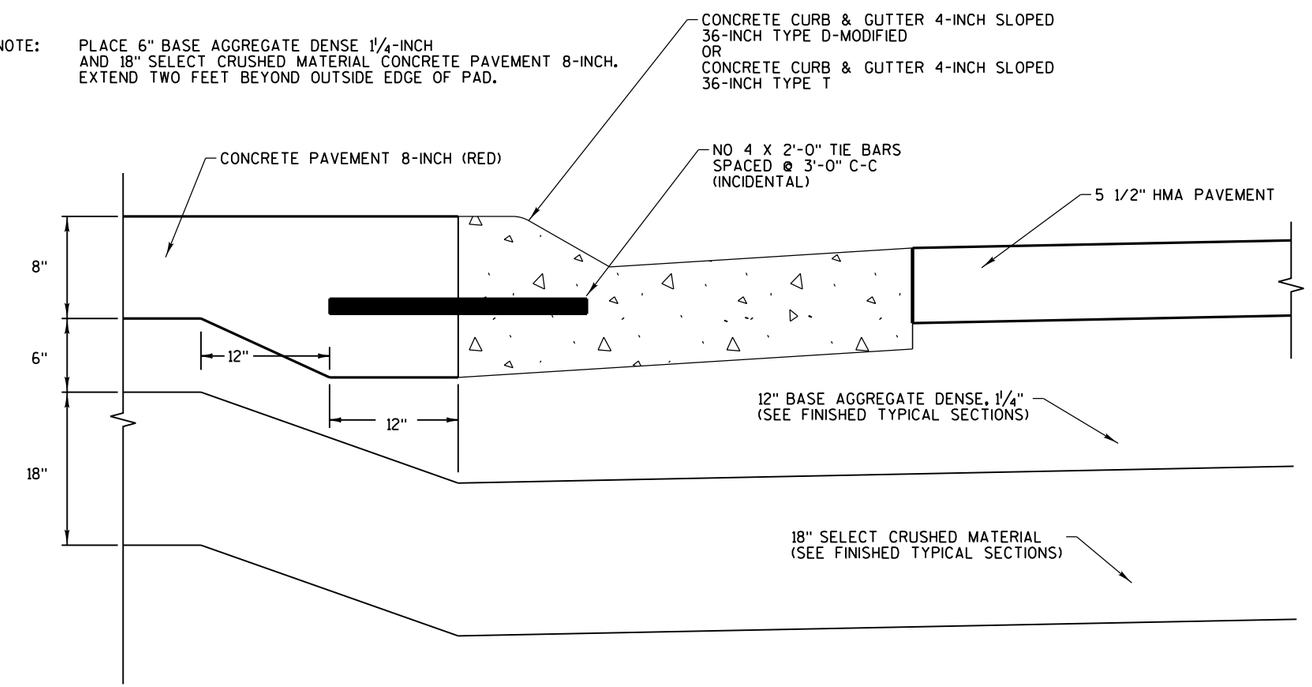

TRUCK OVERTRACKING PAD DETAIL

2

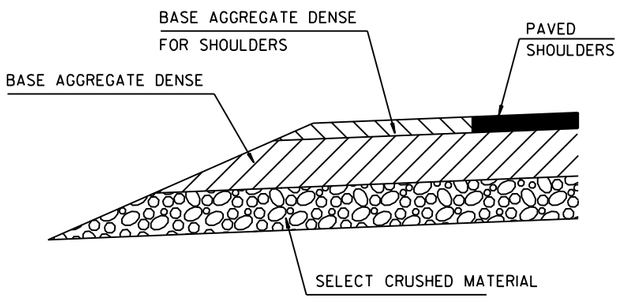

SECTION A-A

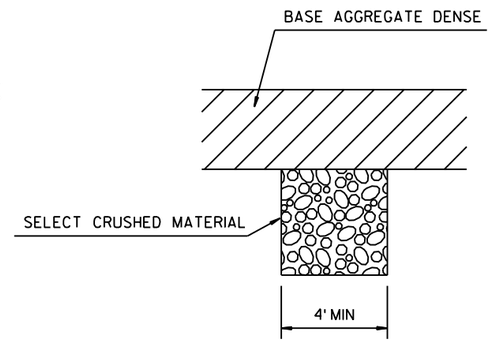

SECTION B-B

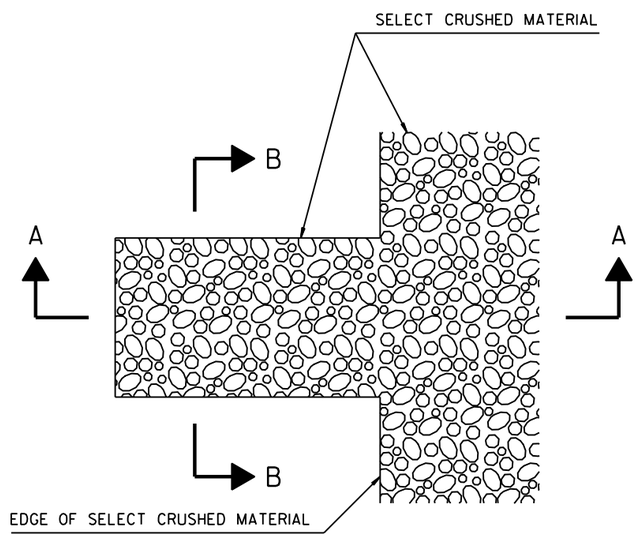

DETAIL FOR FRENCH DRAINS

DRAINS ARE TO BE CONSTRUCTED AT LEAST EVERY 250'
AND AT EACH SAG VERTICAL CURVE IN THE PROFILE.

LOCATIONS TO BE DETERMINED IN THE FIELD BY THE ENGINEER.

EXCAVATION REQUIRED TO CONSTRUCT FRENCH DRAINS SHALL
BE CONSIDERED INCIDENTAL TO THE ITEM SELECT CRUSHED MATERIAL.

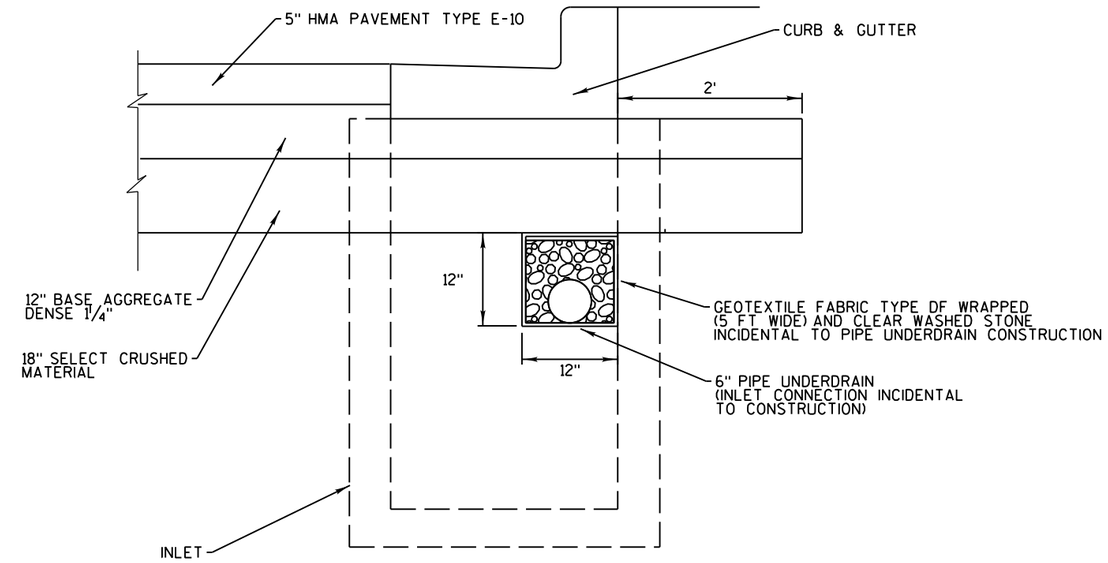

DETAIL FOR PIPE UNDERDRAINS
AND INLET CONNECTIONS

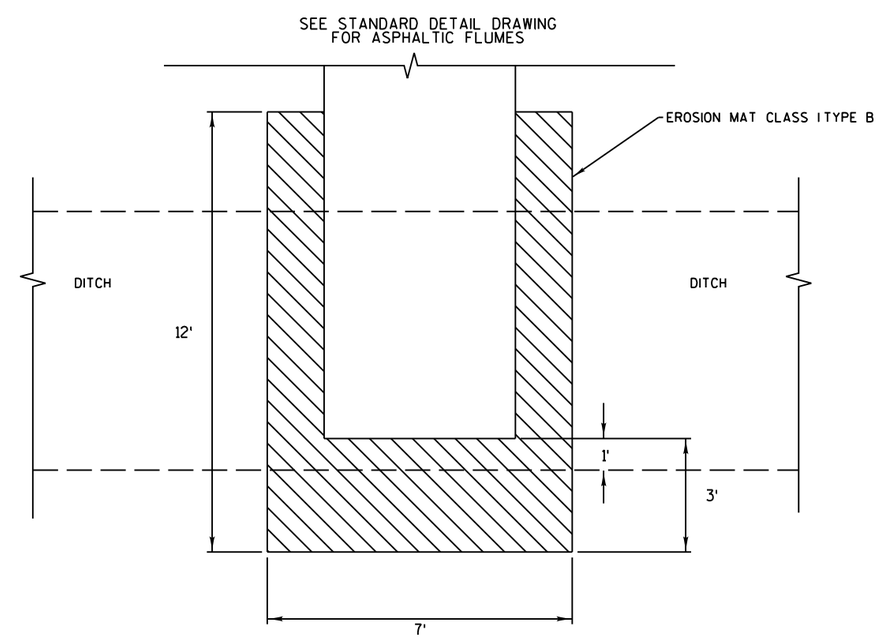

DETAIL FOR ASPHALTIC FLUME ENDS

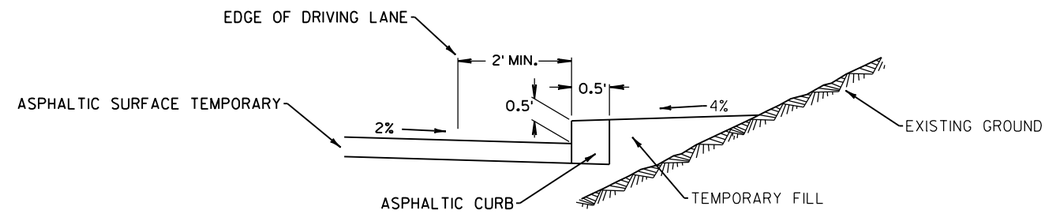

ASPHALTIC CURB DETAIL

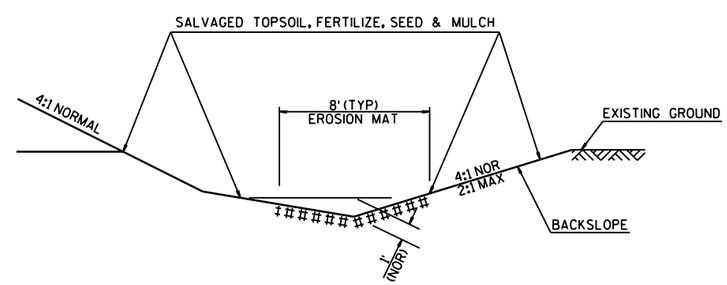

TYPICAL INSTALLATION FOR EROSION MAT

DITCH LINING
(SEE EROSION CONTROL PLANS FOR LOCATIONS)

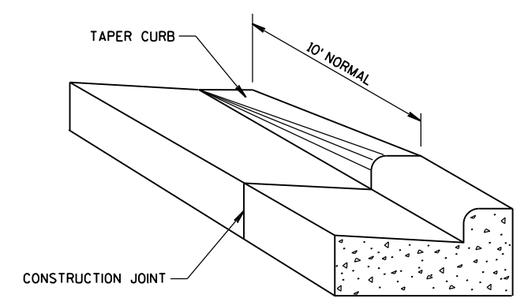

DETAIL OF CURB & GUTTER TERMINI

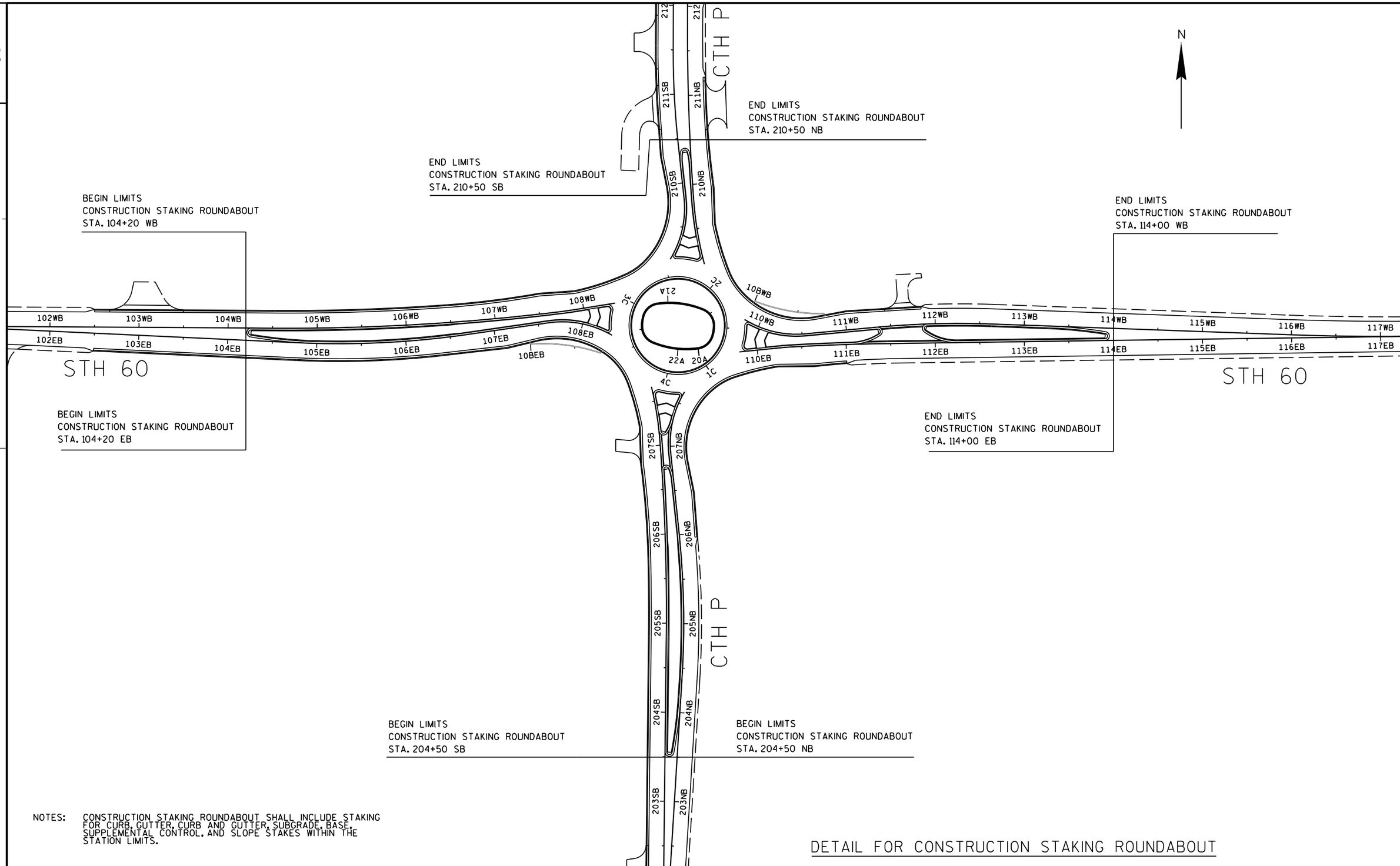

NOTES: CONSTRUCTION STAKING ROUNDABOUT SHALL INCLUDE STAKING FOR CURB, GUTTER, CURB AND GUTTER, SUBGRADE, BASE, SUPPLEMENTAL CONTROL, AND SLOPE STAKES WITHIN THE STATION LIMITS.

DETAIL FOR CONSTRUCTION STAKING ROUNDABOUT

PROJECT NO: 3042-00-73	HWY: STH 60	COUNTY: DODGE	CONSTRUCTION DETAILS	SHEET 15	E

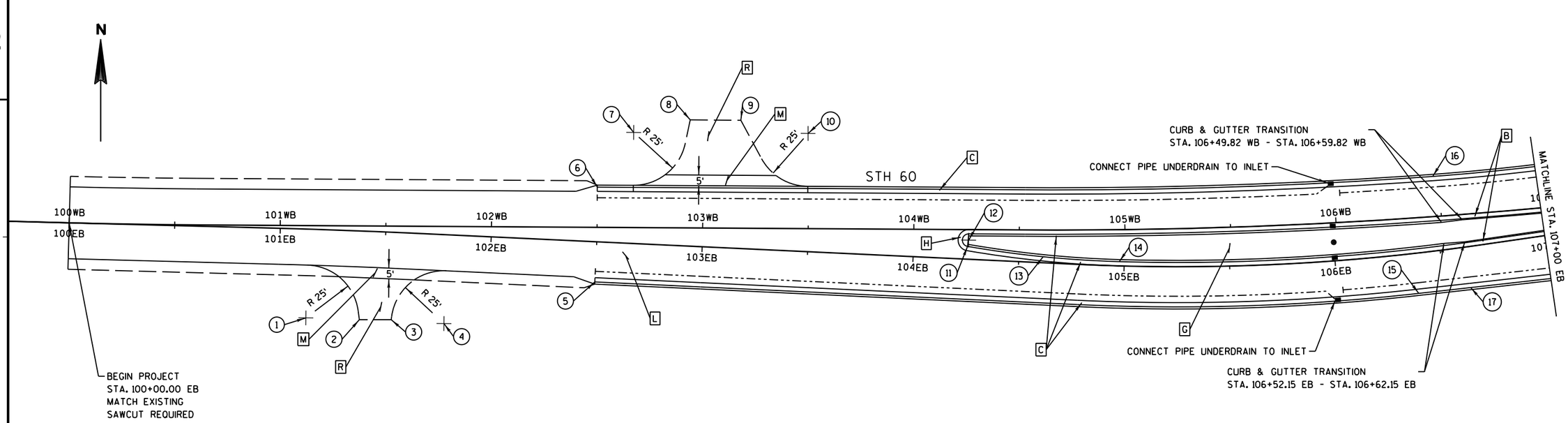

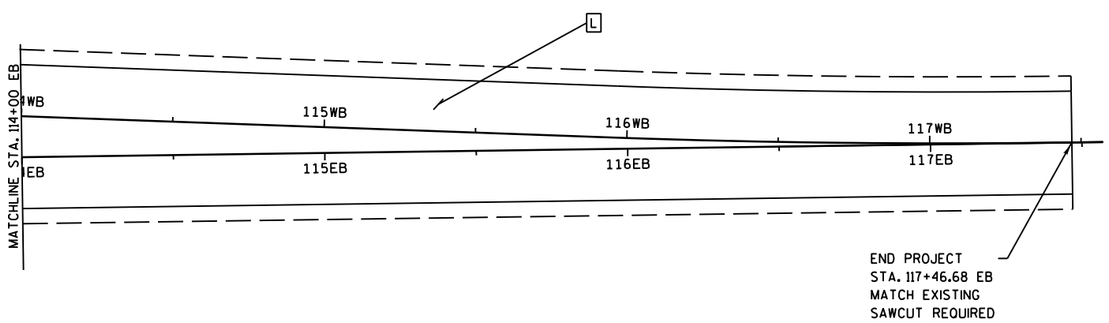

LEGEND

- A CONCRETE CURB & GUTTER, 18-INCH, TYPE A (REVERSE SLOPE)
- B CONCRETE CURB & GUTTER, 30-INCH, TYPE D
- C CONCRETE CURB & GUTTER, 4-INCH SLOPED, 36-INCH, TYPE D
- D CONCRETE CURB & GUTTER, 4-INCH SLOPED, 36-INCH, TYPE D MODIFIED
- E CONCRETE CURB & GUTTER, 4-INCH SLOPED, 36-INCH, TYPE T
- F CONCRETE SIDEWALK, 4-INCH
- G CONCRETE SIDEWALK, 4-INCH (RED)
- H CONCRETE MEDIAN SLOPE NOSE TYPE 1
- I CONCRETE MEDIAN SLOPE NOSE TYPE 2
- J CONCRETE PAVEMENT 8-INCH (RED)
- K CONCRETE ROUNDABOUT TRUCK APRON 8-INCH (RED)
- L 5½-INCH HMA PAVEMENT, TYPE E-10
- M 4-INCH ASPHALTIC SURFACE DRIVEWAY AND FIELD ENTRANCES
- N ASPHALTIC FLUME
- O CURB RAMP TYPE 5
- P CONCRETE CURB & GUTTER, 4-INCH SLOPED 36-INCH, TYPE D (REVERSE SLOPE)
- R BASE AGGREGATE DRIVEWAY
- ■ PROPOSED INLET
- ● PROPOSED MANHOLE
- (3) DATA POINT
- —-- PIPE UNDERDRAIN

DATA TABLE

NUMBER	STATION	OFFSET	LOCATION	RADIUS
1	101+13.45 EB	42	RT	25'
2	101+39.15 EB	41.95	RT	--
3	101+54.43 EB	41.32	RT	--
4	101+79.55 EB	42	RT	25'
5	102+50.00 EB	19	RT	--
6	102+50.00 WB	-19	LT	--
7	102+67.04 WB	-45	LT	25'
8	102+93.82 WB	-51.06	LT	--
9	103+17.82 WB	-51.06	LT	--
10	103+49.66 WB	-45	LT	25'
11	104+25.54 EB	-6.02	LT	--
12	104+25.92 EB	-9	LT	3'
13	104+61.51 EB	-2.8	LT	500'
14	104+97.66 EB	-2	LT	--
15	106+37.64 EB	19	RT	--
16	106+47.26 WB	-19	LT	--
17	106+61.62 EB	19.29	RT	--

NOTE

DIMENSIONS ARE SHOWN TO FACE OF CURB

SEE ALIGNMENT DETAILS FOR ADDITIONAL ALIGNMENT INFORMATION

2

DATA TABLE

NUMBER	STATION	OFFSET	LOCATION	RADIUS
18	106+99.86 WB	-19.82	LT	--
19	107+11.58 EB	20.83	RT	--
20	107+52.45 WB	-22.29	LT	--
21	107+92.82 WB	-19.96	LT	--
22	108+05.59 EB	-2.00	LT	--
23	108+05.79 WB	2.00	RT	--
24	108+06.60 EB	-10.33	LT	--
25	108+28.05 EB	-4.00	LT	2'
26	108+26.43 WB	6.00	RT	4'
27	207+55.67 SB	6.00	RT	4'
28	207+35.24 NB	-10.17	LT	--
29	207+34.74 SB	2.00	RT	--
30	207+22.96 SB	-20.30	LT	--
31	207+21.43 SB	-33.48	LT	12'
32	207+11.41 SB	-49.22	LT	--
33	207+11.97 SB	2.00	RT	--
34	207+15.28 NB	-5.77	LT	--
35	207+16.63 NB	-8.41	LT	3'
36	207+18.55 NB	-2.00	LT	--
37	207+22.03 NB	-2.96	LT	40'
38	207+29.35 NB	-2.00	LT	--
39	207+34.07 NB	-2.00	LT	--
40	207+56.74 NB	-4.00	LT	2'
41	C	-53.00	LT	53'
42	209+18.55 SB	4.00	RT	2'
43	209+41.09 SB	2.00	RT	--
44	209+41.09 NB	-2.00	LT	--
45	209+40.68 NB	-10.23	LT	--
46	209+20.12 NB	-6.00	LT	4'
47	109+89.25 EB	-6.00	LT	4'
48	109+89.54 WB	4.00	RT	2'

NOTE

DIMENSIONS ARE SHOWN TO FACE OF CURB

SEE ALIGNMENT DETAILS FOR ADDITIONAL ALIGNMENT INFORMATION

DATA TABLE (CONT.)

NUMBER	STATION	OFFSET	LOCATION	RADIUS
49	110+08.92 EB	-10.09	LT	--
50	110+09.66 EB	-2.00	LT	--
51	110+12.19 WB	2.00	RT	--
52	110+63.12 EB	22.36	RT	--
53	111+00.00 EB	20.40	RT	--
54	111+01.96 WB	-20.50	LT	--
55	111+06.04 EB	-2.00	LT	--
56	111+21.46 EB	-2.00	LT	--
57	111+22.31 EB	-4.31	LT	60'
58	111+35.68 EB	-13.58	LT	3'
59	111+37.27 EB	-11.05	LT	--
60	111+38.95 WB	2.00	RT	--
61	111+44.97 WB	-35.22	LT	15'
62	111+59.46 WB	-57.00	LT	--
63	111+65.84 WB	-19.00	LT	--
64	111+86.32 WB	-57.00	LT	--
65	111+83.00 WB	-40.00	LT	15'
66	111+83.09 WB	-32.00	LT	12'
67	111+84.87 WB	-19.00	LT	--
68	111+86.59 WB	2.00	RT	--
69	111+89.13 EB	-13.95	LT	--
70	111+90.93 EB	-16.35	LT	3'
71	112+06.13 EB	-5.07	LT	60'
72	112+09.44 EB	-2.00	LT	--
73	112+25.06 EB	-2.00	LT	--
74	113+27.98 WB	2.00	RT	--
75	113+59.70 WB	3.01	RT	500'
76	113+91.29 WB	6.02	RT	--
77	113+90.49 EB	-5.00	LT	3'

LEGEND

- A CONCRETE CURB & GUTTER, 18-INCH, TYPE A (REVERSE SLOPE)
- B CONCRETE CURB & GUTTER, 30-INCH, TYPE D
- C CONCRETE CURB & GUTTER, 4-INCH SLOPED, 36-INCH, TYPE D
- D CONCRETE CURB & GUTTER, 4-INCH SLOPED, 36-INCH, TYPE D MODIFIED
- E CONCRETE CURB & GUTTER, 4-INCH SLOPED, 36-INCH, TYPE T
- F CONCRETE SIDEWALK, 4-INCH
- G CONCRETE SIDEWALK, 4-INCH (RED)
- H CONCRETE MEDIAN SLOPE NOSE TYPE 1
- I CONCRETE MEDIAN SLOPE NOSE TYPE 2
- J CONCRETE PAVEMENT 8-INCH (RED)
- K CONCRETE ROUNDABOUT TRUCK APRON 8-INCH (RED)
- L 5½-INCH HMA PAVEMENT, TYPE E-10
- M 4-INCH ASPHALTIC SURFACE DRIVEWAY AND FIELD ENTRANCES
- N ASPHALTIC FLUME
- O CURB RAMP TYPE 5
- P CONCRETE CURB & GUTTER, 4-INCH SLOPED 36-INCH, TYPE D (REVERSE SLOPE)
- R BASE AGGREGATE DRIVEWAY
- ■ PROPOSED INLET
- ● PROPOSED MANHOLE
- (3) DATA POINT
- —·- PIPE UNDERDRAIN

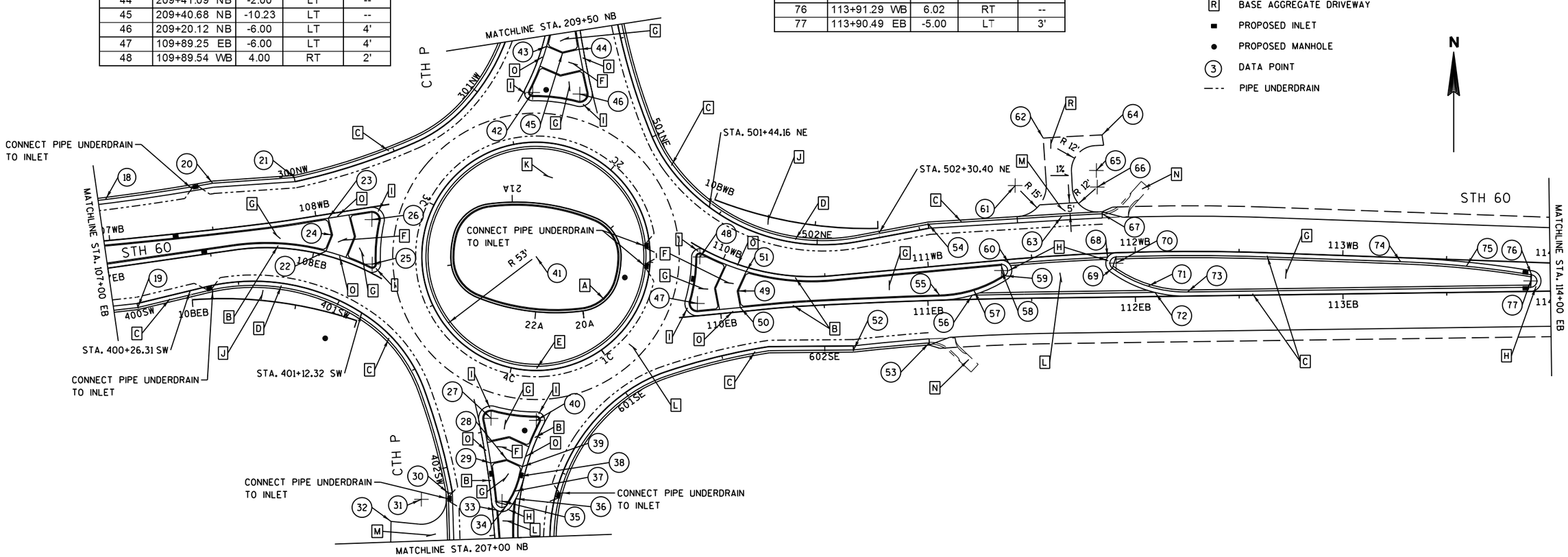

PROJECT NO:3042-00-73	HWY:STH 60	COUNTY:DODGE	INTERSECTION DETAILS	SHEET 17	E

2

LEGEND

- A CONCRETE CURB & GUTTER, 18-INCH, TYPE A (REVERSE SLOPE)
- B CONCRETE CURB & GUTTER, 30-INCH, TYPE D
- C CONCRETE CURB & GUTTER, 4-INCH SLOPED, 36-INCH, TYPE D
- D CONCRETE CURB & GUTTER, 4-INCH SLOPED, 36-INCH, TYPE D MODIFIED
- E CONCRETE CURB & GUTTER, 4-INCH SLOPED, 36-INCH, TYPE T
- F CONCRETE SIDEWALK, 4-INCH
- G CONCRETE SIDEWALK, 4-INCH (RED)
- H CONCRETE MEDIAN SLOPE NOSE TYPE 1
- I CONCRETE MEDIAN SLOPE NOSE TYPE 2
- J CONCRETE PAVEMENT 8-INCH (RED)
- K CONCRETE ROUNDABOUT TRUCK APRON 8-INCH (RED)
- L 5½-INCH HMA PAVEMENT, TYPE E-10
- M 4-INCH ASPHALTIC SURFACE DRIVEWAY AND FIELD ENTRANCES
- N ASPHALTIC FLUME
- O CURB RAMP TYPE 5
- P CONCRETE CURB & GUTTER, 4-INCH SLOPED 36-INCH, TYPE D (REVERSE SLOPE)
- R BASE AGGREGATE DRIVEWAY
- ■ PROPOSED INLET
- ● PROPOSED MANHOLE
- (3) DATA POINT
- --- PIPE UNDERDRAIN

NOTE

DIMENSIONS ARE SHOWN TO FACE OF CURB

SEE ALIGNMENT DETAILS FOR ADDITIONAL ALIGNMENT INFORMATION

DATA TABLE

NUMBER	STATION	OFFSET	LOCATION	RADIUS
78	199+15.00 NB	18.00	RT	--
79	199+23.00 NB	31.00	RT	12'
80	199+35.00 NB	42.00	RT	--
81	199+65.00 NB	42.00	RT	--
82	199+77.00 NB	31.00	RT	12'
83	200+26.08 NB	29.00	RT	10'
84	200+26.06 NB	26.39	RT	10'
85	200+25.31 NB	36.40	RT	--
86	200+25.35 NB	41.89	RT	--
87	200+56.61 NB	41.47	RT	--
88	200+71.65 NB	34.00	RT	15'
89	201+00.00 NB	18.00	RT	--
90	201+50.00 SB	-19.00	LT	--
91	202+03.25 SB	-35.00	LT	15'
92	202+19.48 SB	-41.50	LT	--
93	202+34.00 SB	-41.67	LT	--
94	202+50.14 SB	-35.00	LT	15'
95	203+54.84 NB	-6.02	LT	--

DATA TABLE (CONT.)

NUMBER	STATION	OFFSET	LOCATION	RADIUS
96	203+55.22 NB	-9.00	LT	3'
97	203+86.43 NB	-3.01	LT	500'
98	204+18.15 NB	-2.00	LT	--
99	205+72.75 SB	-19.00	LT	--
100	205+95.73 NB	19.21	RT	--
101	206+26.97 SB	-19.88	LT	993'
102	206+45.65 NB	20.67	RT	--
103	206+62.98 NB	-2.00	LT	--
104	206+69.22 NB	-2.49	LT	40'
105	206+74.38 NB	-6.80	LT	3'
106	206+75.30 NB	-3.94	LT	--
107	206+75.79 NB	-2.00	LT	--
108	206+76.22 SB	2.00	RT	--
109	206+80.51 NB	17.38	RT	--
110	206+81.17 SB	-22.51	LT	--
111	206+81.78 SB	-35.50	LT	12'
112	206+96.74 SB	-50.46	LT	--

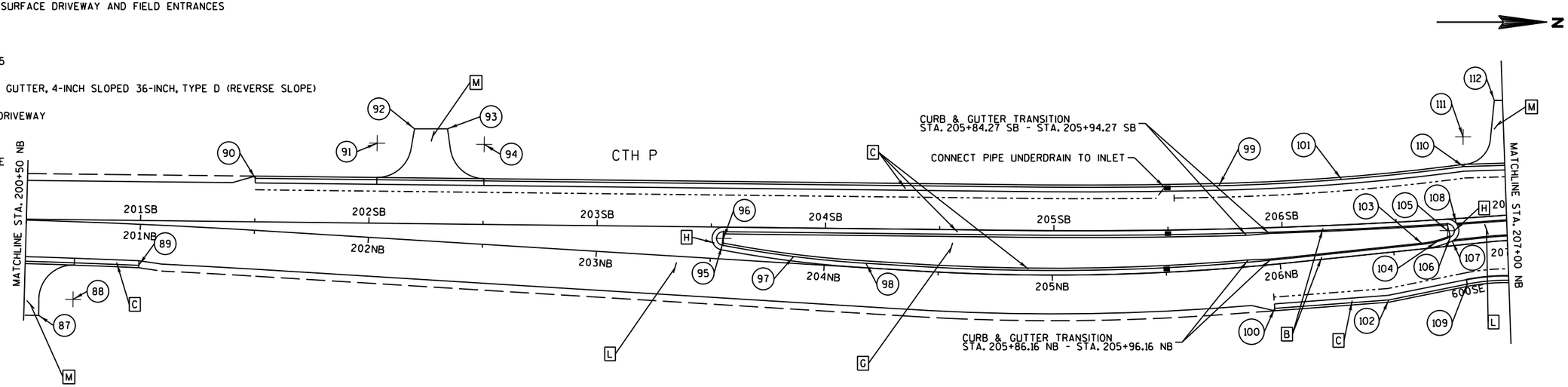

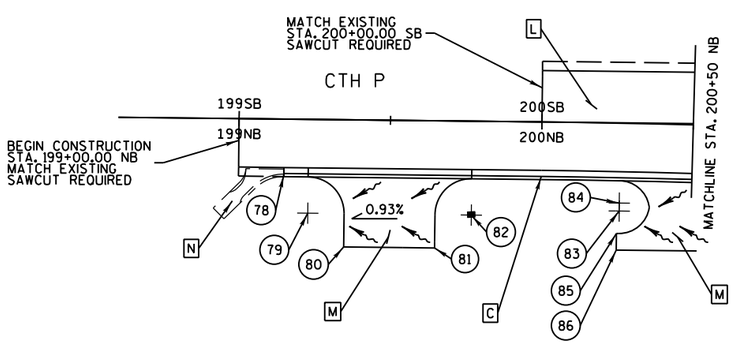

2

PROJECT NO:3042-00-73	HWY:STH 60	COUNTY:DODGE	INTERSECTION DETAILS	SHEET 18	E

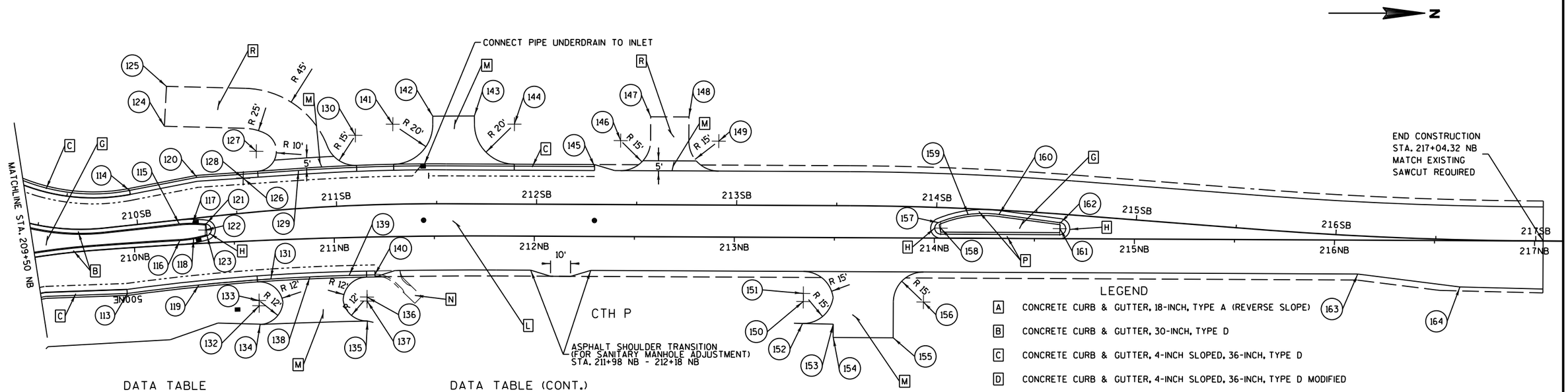

LEGEND

- A CONCRETE CURB & GUTTER, 18-INCH, TYPE A (REVERSE SLOPE)
- B CONCRETE CURB & GUTTER, 30-INCH, TYPE D
- C CONCRETE CURB & GUTTER, 4-INCH SLOPED, 36-INCH, TYPE D
- D CONCRETE CURB & GUTTER, 4-INCH SLOPED, 36-INCH, TYPE D MODIFIED
- E CONCRETE CURB & GUTTER, 4-INCH SLOPED, 36-INCH, TYPE T
- F CONCRETE SIDEWALK, 4-INCH
- G CONCRETE SIDEWALK, 4-INCH (RED)
- H CONCRETE MEDIAN SLOPE NOSE TYPE 1
- I CONCRETE MEDIAN SLOPE NOSE TYPE 2
- J CONCRETE PAVEMENT 8-INCH (RED)
- K CONCRETE ROUNDABOUT TRUCK APRON 8-INCH (RED)
- L 5½-INCH HMA PAVEMENT, TYPE E-10
- M 4-INCH ASPHALTIC SURFACE DRIVEWAY AND FIELD ENTRANCES
- N ASPHALTIC FLUME
- O CURB RAMP TYPE 5
- P CONCRETE CURB & GUTTER, 4-INCH SLOPED 36-INCH, TYPE D (REVERSE SLOPE)
- R BASE AGGREGATE DRIVEWAY
- ■ PROPOSED INLET
- ● PROPOSED MANHOLE
- (3) DATA POINT
- —-- PIPE UNDERDRAIN

DATA TABLE

NUMBER	STATION	OFFSET	LOCATION	RADIUS
113	209+94.87 NB	22.73	RT	--
114	209+97.89 SB	-17.33	LT	--
115	210+20.75 SB	2.00	RT	--
116	210+22.82 NB	-2.00	LT	--
117	210+27.45 SB	2.38	RT	60'
118	210+29.73 NB	-2.41	LT	60'
119	210+31.19 NB	20.71	RT	993'
120	210+32.16 SB	-20.22	LT	--
121	210+34.06 SB	3.50	RT	--
122	210+35.83 NB	-6.55	LT	3'
123	210+36.53 NB	-3.63	LT	--
124	210+18.64 SB	-47.38	LT	--
125	210+21.84 SB	-67.13	LT	--
126	210+54.84 SB	-17.35	LT	25'
127	210+62.39 SB	-30.20	LT	10'
128	210+54.84 SB	-17.35	LT	45'
129	210+82.19 SB	-19.00	LT	--
130	211+10.73 SB	-35.00	LT	15'
131	210+67.51 NB	19.46	RT	--
132	210+61.05 NB	32.63	RT	12'
133	210+61.08 NB	30.00	RT	12'
134	210+61.08 NB	42.00	RT	--
135	211+15.74 NB	42.00	RT	--
136	211+15.74 NB	30.00	RT	12'
137	211+15.76 NB	32.00	RT	12'
138	210+87.22 NB	19.12	RT	993'

DATA TABLE (CONT.)

NUMBER	STATION	OFFSET	LOCATION	RADIUS
139	211+06.94 NB	19.00	RT	--
140	211+20.00 NB	19.00	RT	--
141	211+28.90 SB	-40.00	LT	20'
142	211+48.13 SB	-43.82	LT	--
143	211+68.67 SB	-43.98	LT	--
144	211+88.71 SB	-40.00	LT	20'
145	212+28.88 SB	-19.00	LT	--
146	212+41.84 SB	-32.00	LT	15'
147	212+56.84 SB	-44.00	LT	--
148	212+75.91 SB	-44.00	LT	--
149	212+90.91 SB	-32.00	LT	15'
150	213+34.65 NB	32.00	RT	15'
151	213+34.65 NB	28.00	RT	15'
152	213+34.32 NB	43.00	RT	--
153	213+49.65 NB	43.34	RT	--
154	213+49.65 NB	50.00	RT	--
155	213+79.65 NB	50.00	RT	--
156	213+94.65 NB	32.00	RT	15'
157	214+01.08 SB	7.59	RT	--
158	214+03.15 NB	-5.00	LT	3'
159	214+15.84 SB	2.95	RT	58'
160	214+31.26 SB	2.19	RT	--
161	214+62.64 NB	-5.00	LT	3'
162	214+62.30 SB	4.32	RT	--
163	216+11.73 NB	17.00	RT	--
164	216+62.84 NB	23.21	RT	--

NOTE

DIMENSIONS ARE SHOWN TO FACE OF CURB

SEE ALIGNMENT DETAILS FOR ADDITIONAL ALIGNMENT INFORMATION

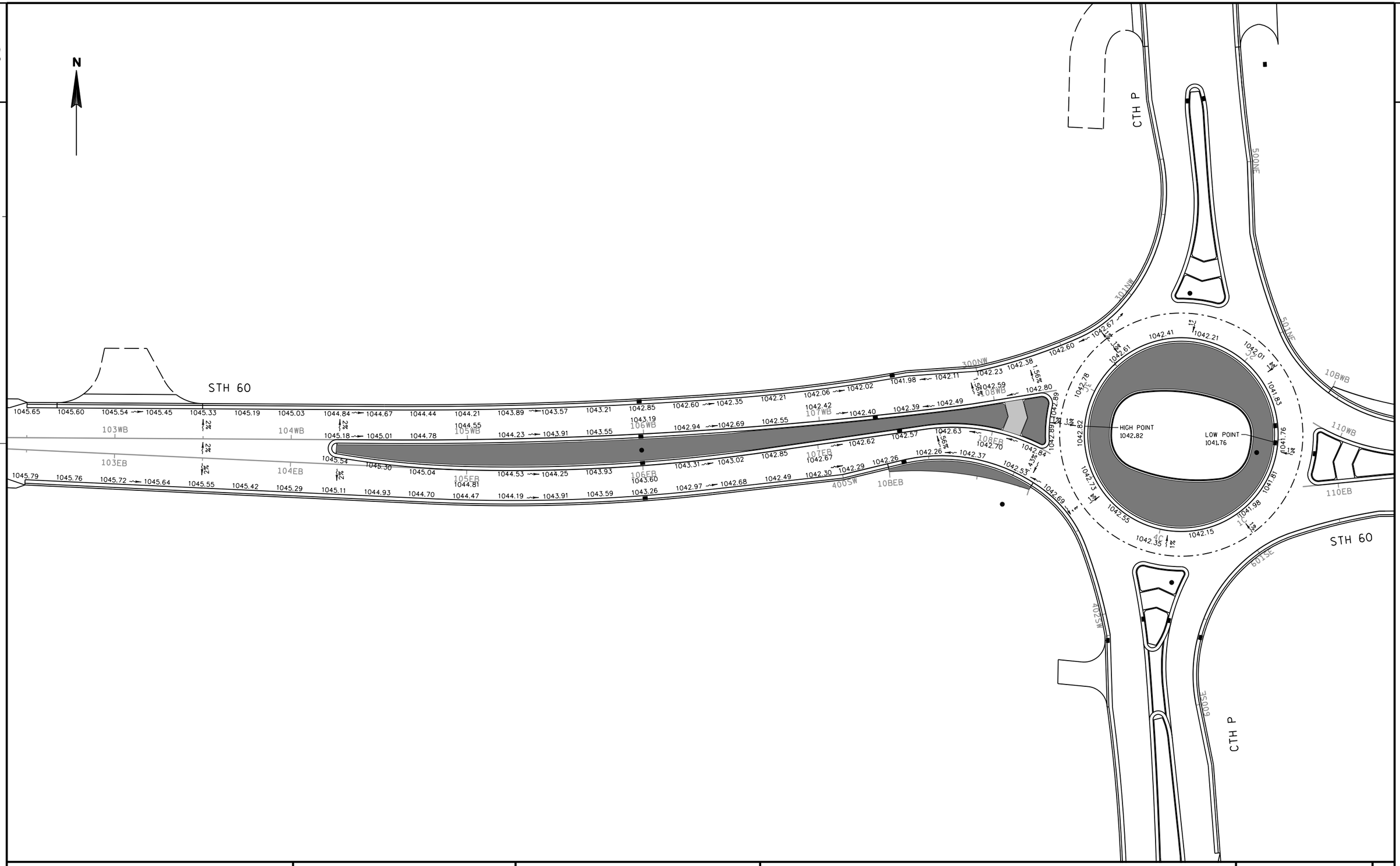

PROJECT NO:3042-00-73	HWY:STH 60	COUNTY:DODGE	PAVING DETAILS - STH 60	SHEET 20	E

FILE NAME : G:\2011\11981 STH 60 & CTH P Rubicon\Micros\Plansheets\021201_pd.dgn PLOT DATE : 7/19/2013 PLOT BY : O.R.E., Inc. PLOT NAME : PLOT SCALE : 50.0000 sf / in.

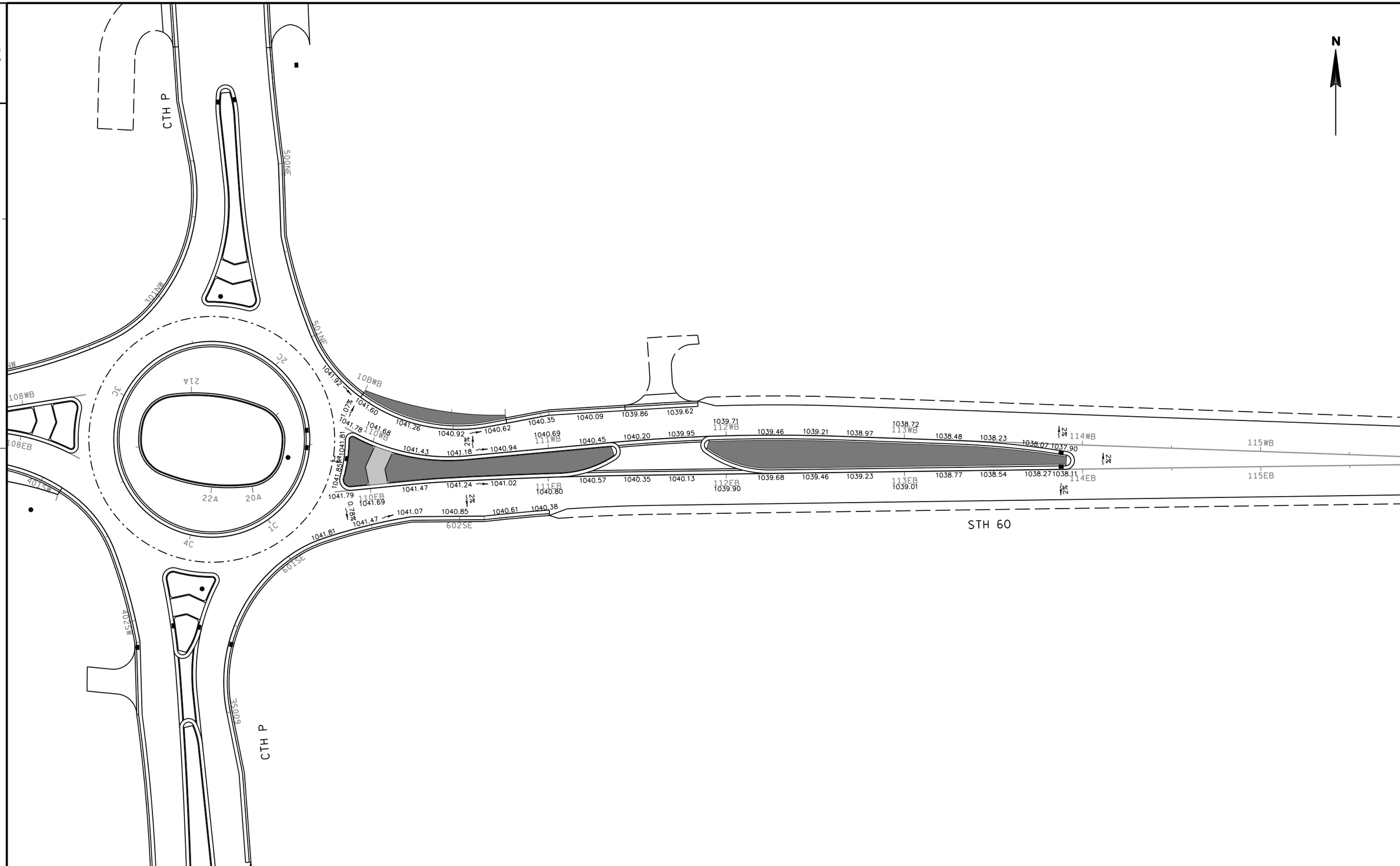

PROJECT NO:3042-00-73	HWY:STH 60	COUNTY:DODGE	PAVING DETAILS - STH 60	SHEET 21	E

FILE NAME : G:\2011\11981 STH 60 & CTH P Rubicon\Micros\Plansheets\021202_pd.dgn PLOT DATE : 7/19/2013 PLOT BY : O.R.E., Inc. PLOT NAME : PLOT SCALE : 50.0000 sf / in.

WISDOT/CADDS SHEET 42

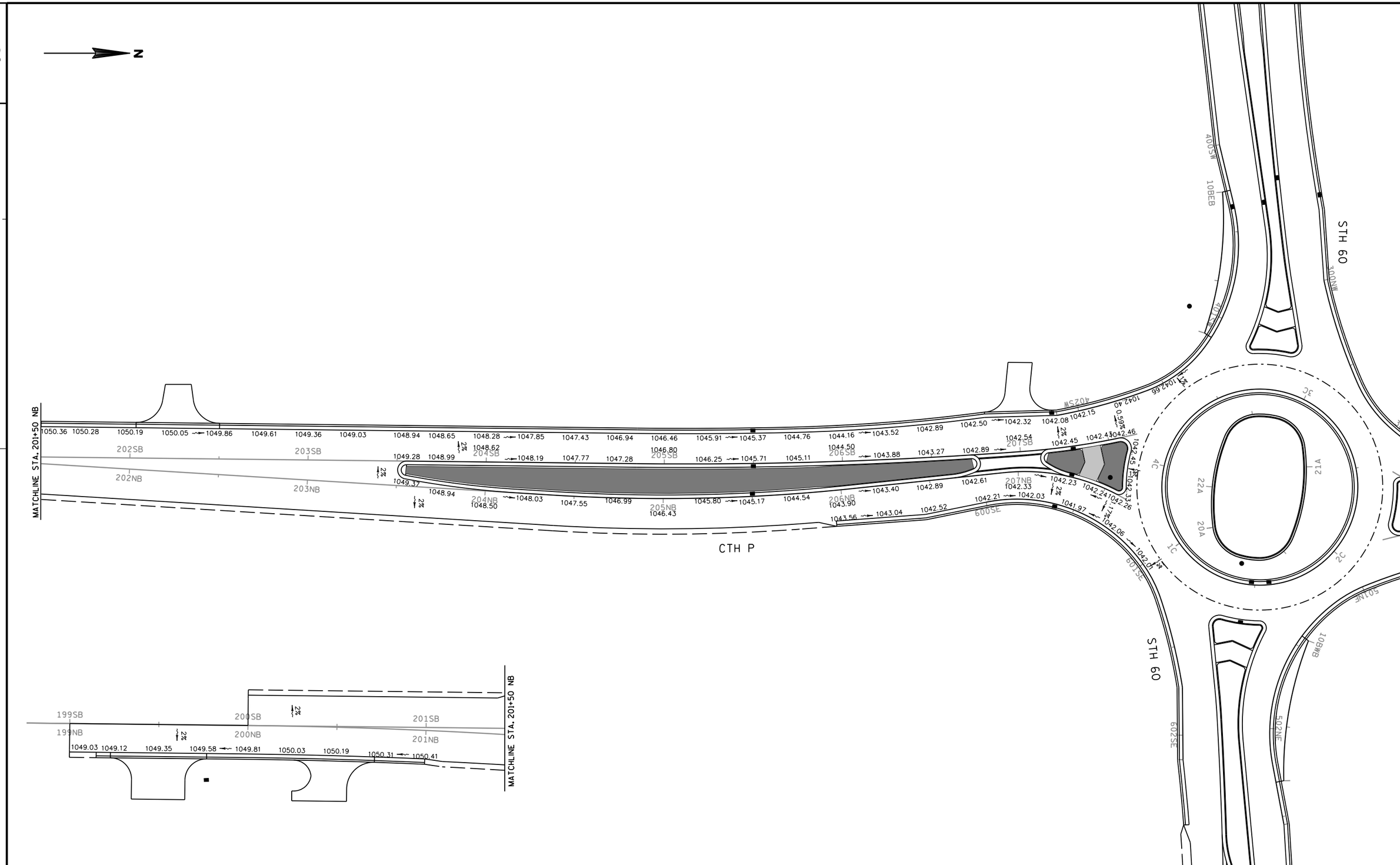

PROJECT NO:3042-00-73	HWY:STH 60	COUNTY:DODGE	PAVING DETAILS - CTH P	SHEET 22	E

FILE NAME : G:\2011\11981 STH 60 & CTH P Rubicon\Micros\Plansheets\021203_pd.dgn PLOT DATE : 7/19/2013 PLOT BY : O.R.E., Inc. PLOT NAME : PLOT SCALE : 50.0000 sf / in.

WISDOT/CADDS SHEET 42

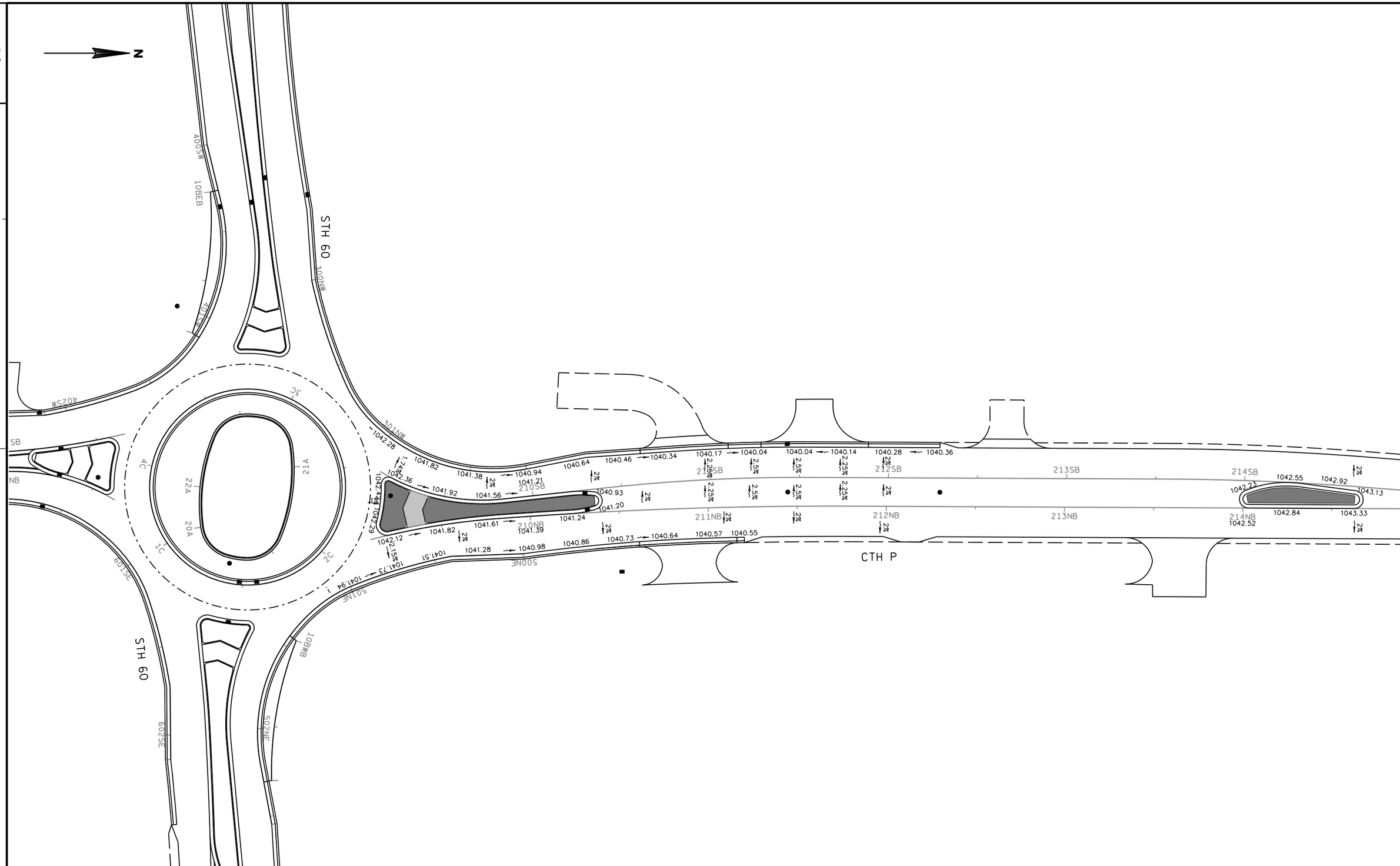

PROJECT NO:3042-00-73	HWY:STH 60	COUNTY:DODGE	PAVING DETAILS - CTH P	SHEET 23	E

FILE NAME : G:\2011\11981 STH 60 & CTH P Rubicon\Micros\Plansheets\021204_pd.dgn PLOT DATE : 7/19/2013 PLOT BY : O.R.E., Inc. PLOT NAME : PLOT SCALE : 50.0000 sf / in.

WISDOT/CADDS SHEET 42

2

N

EROSION CONTROL LEGEND

- EROSION MAT CLASS I, TYPE B
- EROSION MAT URBAN CLASS I, TYPE A
- SILT FENCE
- RIPRAP, MEDIUM
- SLOPE INTERCEPT
- INLET PROTECTION
- TEMPORARY DITCH CHECK
- CULVERT PIPE CHECK
- SURFACE WATER FLOW
- ROCK MULCH

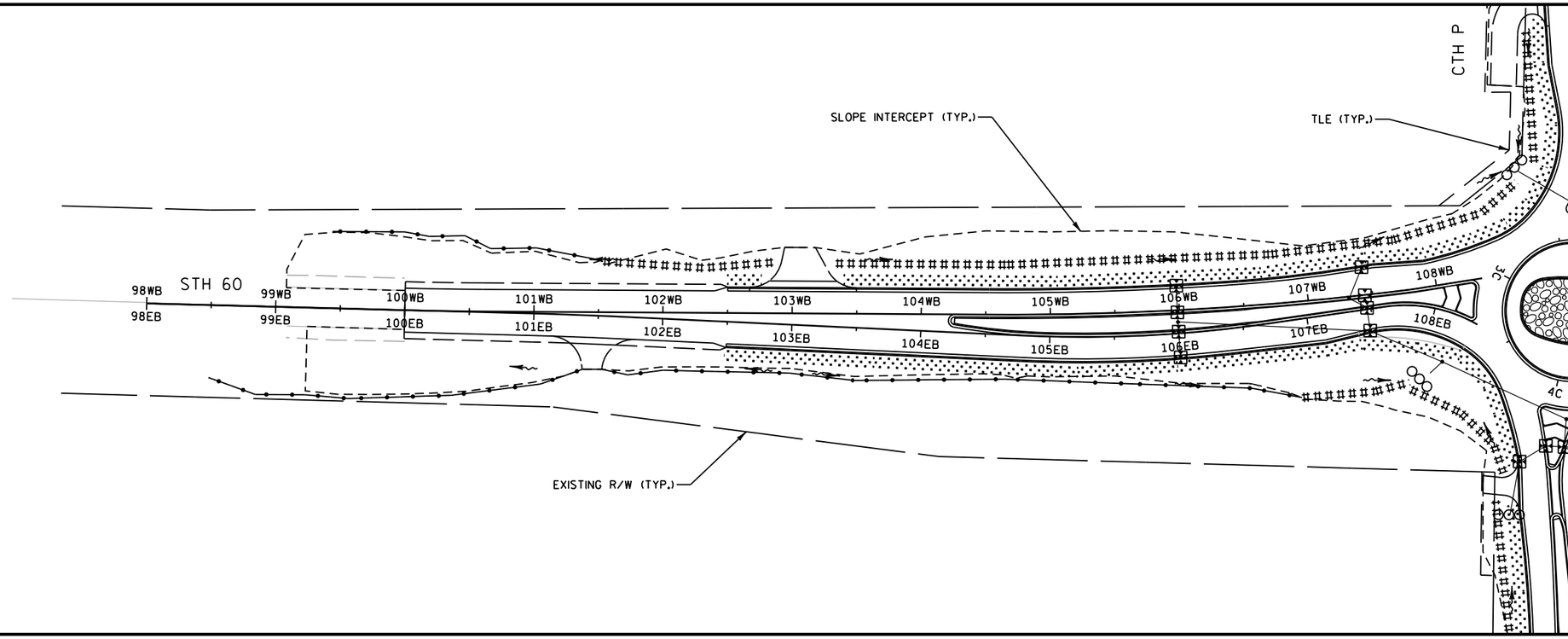

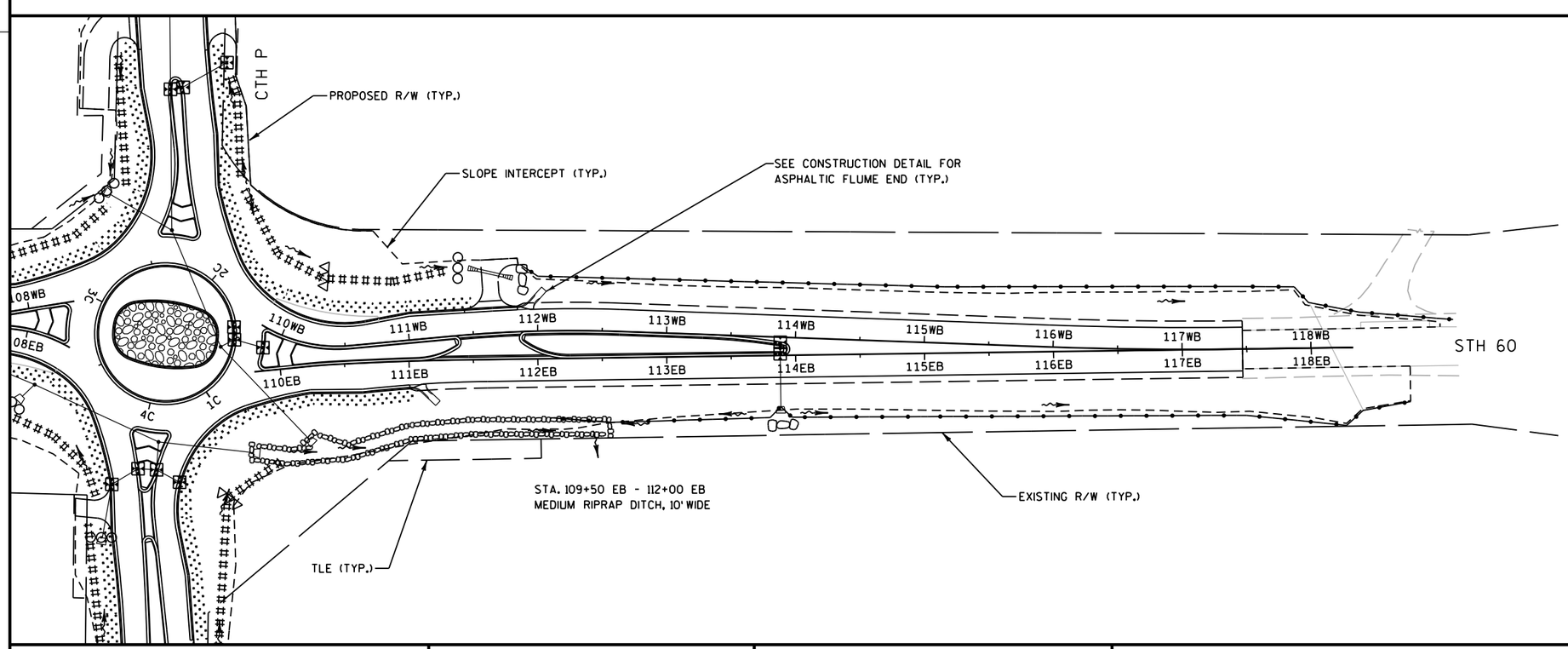

PROJECT NO:3042-00-73	HWY:STH 60	COUNTY:DODGE	EROSION CONTROL	SHEET 24	E

2

N

EROSION CONTROL LEGEND

- EROSION MAT CLASS I, TYPE B
- EROSION MAT URBAN CLASS I, TYPE A
- SILT FENCE
- RIPRAP, MEDIUM
- SLOPE INTERCEPT
- INLET PROTECTION
- TEMPORARY DITCH CHECK
- CULVERT PIPE CHECK
- SURFACE WATER FLOW
- ROCK MULCH

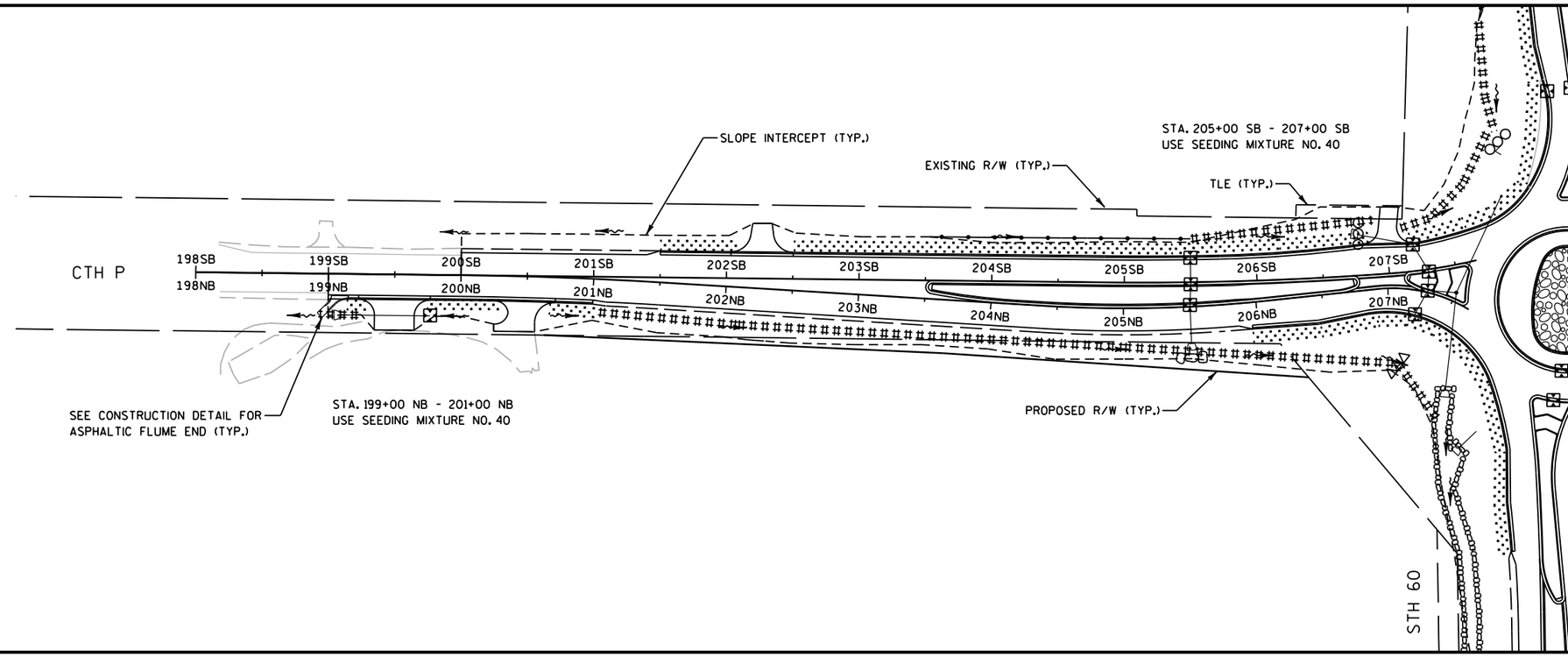

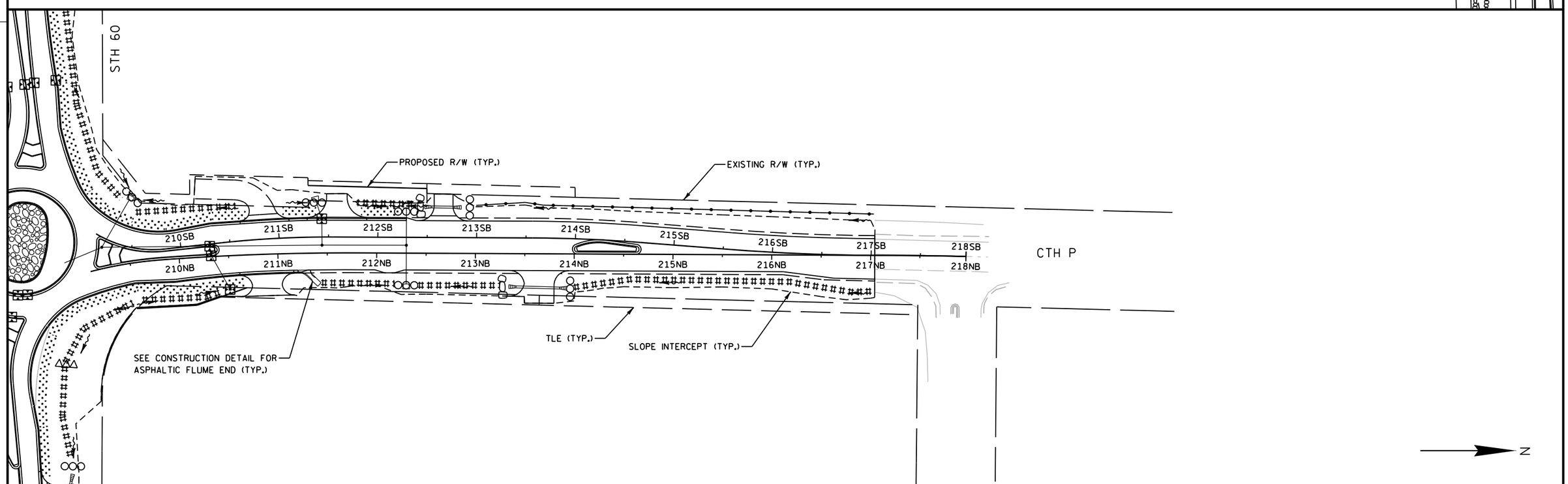

2

N

PROJECT NO:3042-00-73	HWY:STH 60	COUNTY:DODGE	EROSION CONTROL	SHEET 25	E

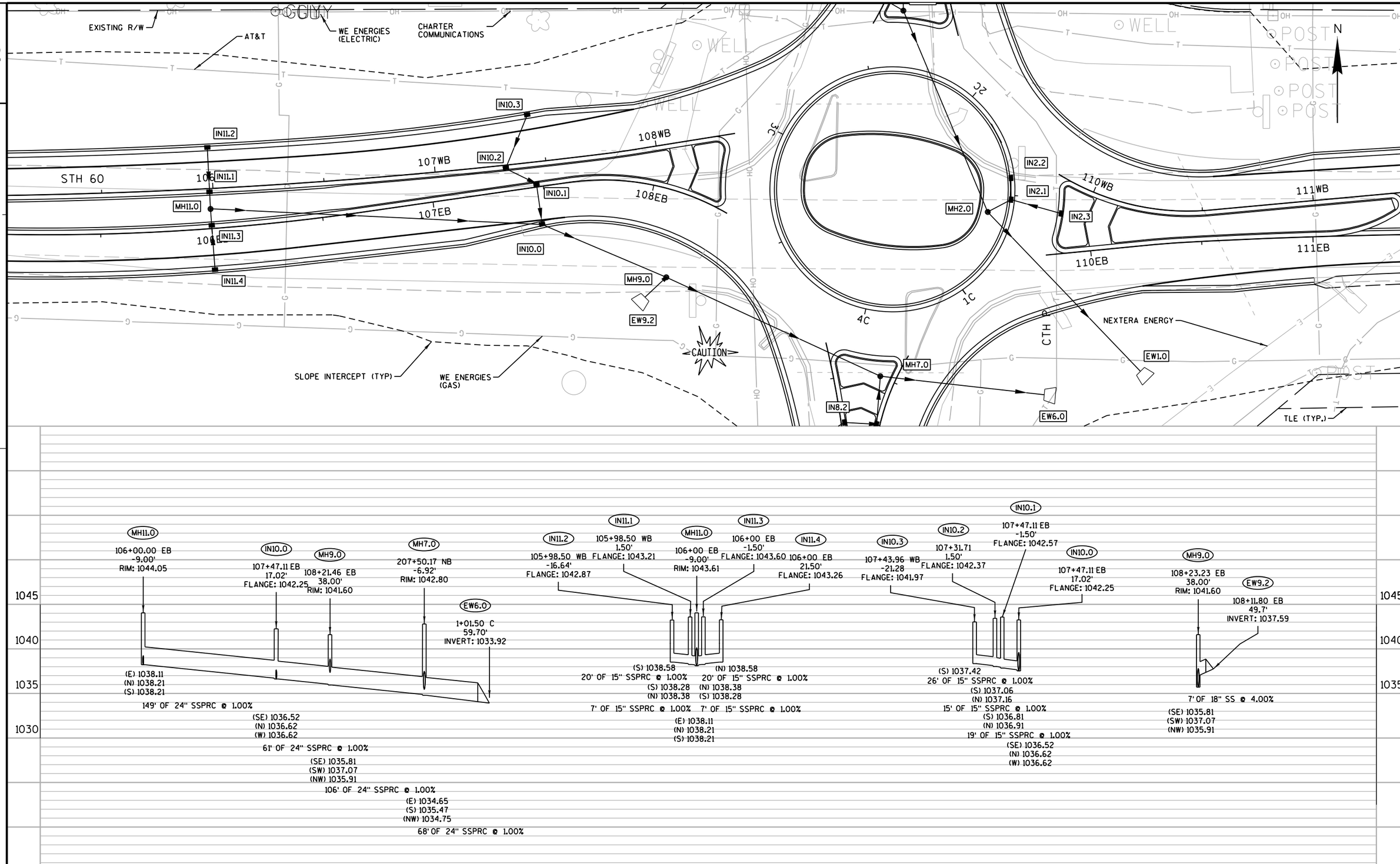

PROJECT NO:3042-00-73	HWY:STH 60	COUNTY:DODGE	STORM SEWER	SHEET 26	E

FILE NAME : G:\2011\11981 STH 60 & CTH P Rubicon\Micros\Plansheets\022501_ss.dgn PLOT DATE : 9/23/2013 PLOT BY : O.R.E., Inc. PLOT NAME : PLOT SCALE : 100.0000 sf / in.

WISDOT/CADDS SHEET 41

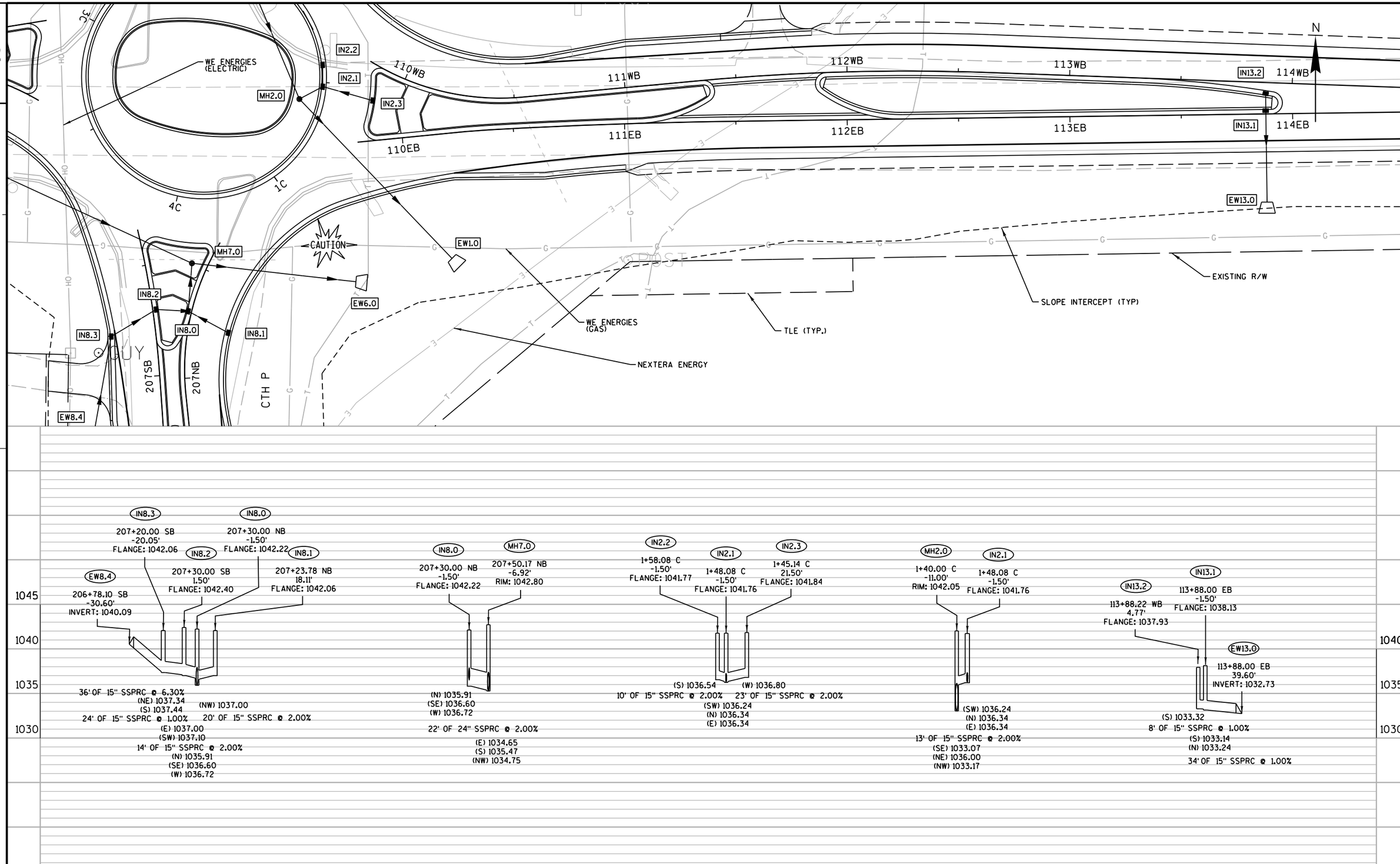

PROJECT NO:3042-00-73	HWY:STH 60	COUNTY:DODGE	STORM SEWER	SHEET 27	E

FILE NAME : G:\2011\11981 STH 60 & CTH P Rubicon\Micros\Plansheets\022502_ss.dgn PLOT DATE : 9/23/2013 PLOT BY : O.R.E., Inc. PLOT NAME : PLOT SCALE : 100.0000 sf / in.

WISDOT/CADDS SHEET 41

2

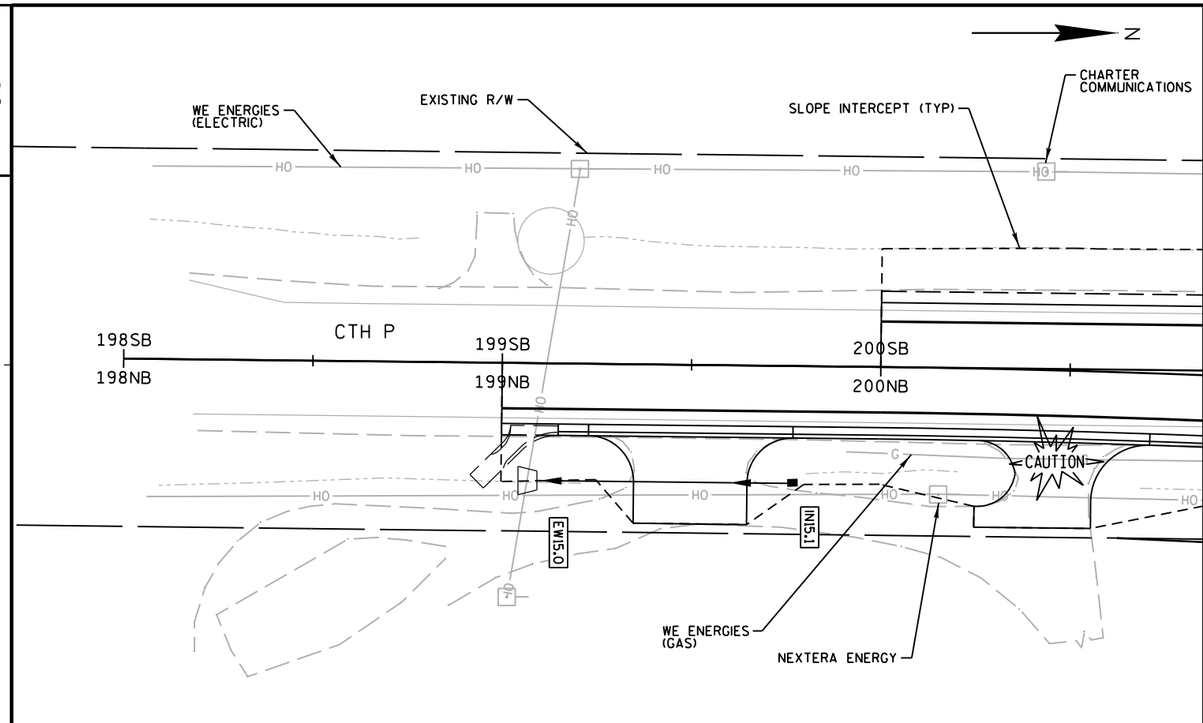

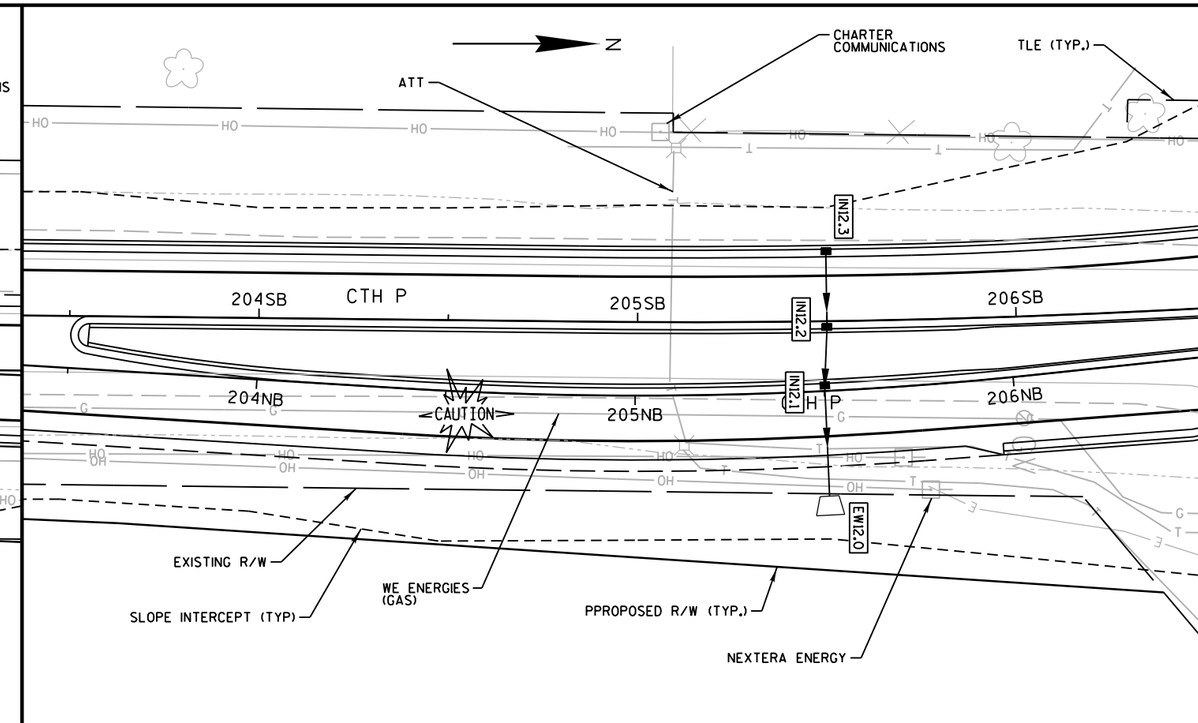

2

PROJECT NO:3042-00-73	HWY:STH 60	COUNTY:DODGE	STORM SEWER	SHEET 28	E

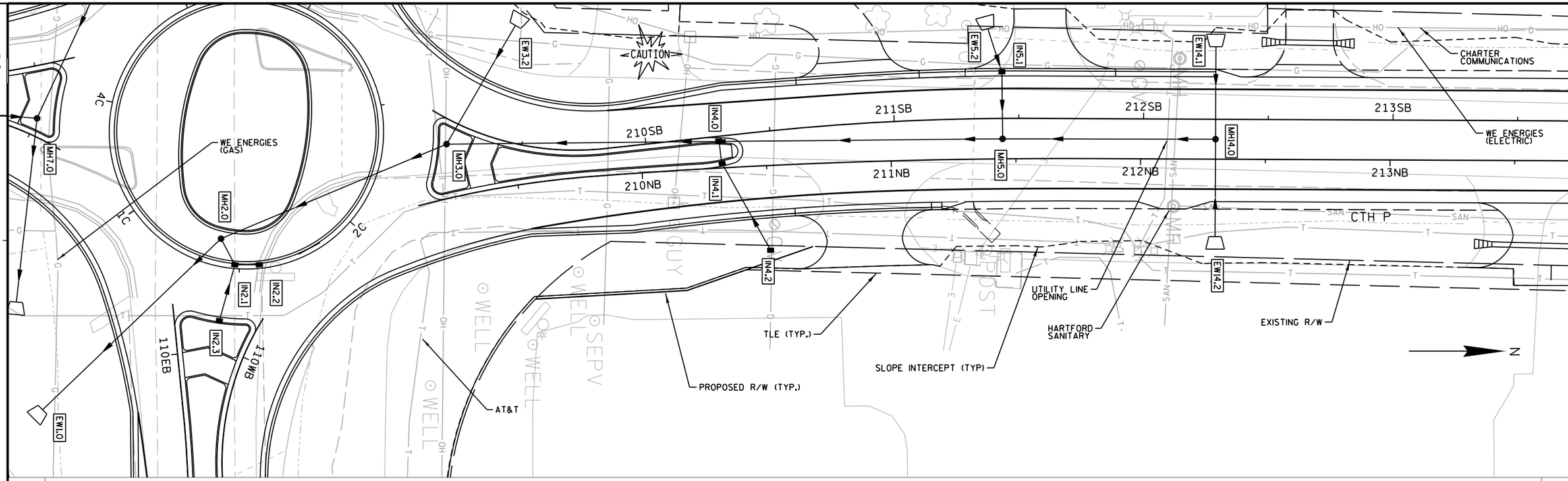

PROJECT NO: 3042-00-73	HWY: STH 60	COUNTY: DODGE	STORM SEWER	SHEET 29	E

FILE NAME : G:\2011\11981 STH 60 & CTH P Rubicon\Micros\Plansheets\022504_ss.dgn PLOT DATE : 9/23/2013 PLOT BY : O.R.E., Inc. PLOT NAME : PLOT SCALE : 100.0000 sf / in.

2

STORM SEWER SCHEDULE

STRUCTURE											DISCHARGE PIPE					
NO.	STATION	OFFSET		STRUCTURE	STRUCTURE TYPE	COVER TYPE	RIM OR FLANGE ELEV	TOP OF STRUCTURE ELEV	FLOWLINE OF STRUCTUE	STRUCTURE DEPTH FEET	REMARKS	SIZE INCHES	DISTANCE FEET	SLOPE %	PIPE CLASS	DRAINS TO	DOWNSTREAM DISCHARGE ELEV
IN11.2	105+98.50 WB	16.64	LT	INLET	2X3-FT	HM	1042.87	1041.87	1038.58	3.29	PIPE UNDERDRAIN CONNECTION	15	20	1.00%	III	IN11.1	1038.38
IN11.1	105+98.50 WB	1.50	RT	INLET	2X3-FT	HM	1043.21	1042.21	1038.28	3.93		15	7	1.00%	III	MH11.0	1038.21
IN11.4	106+00.00 EB	21.50	RT	INLET	2X3-FT	HM	1043.26	1042.26	1038.58	3.68	PIPE UNDERDRAIN CONNECTION	15	20	1.00%	III	IN11.3	1038.38
IN11.3	106+00.00 EB	1.50	LT	INLET	2X3-FT	HM	1043.60	1042.60	1038.28	4.32		15	7	1.00%	III	MH11.0	1038.21
MH11.0	106+00.00 EB	9.00	LT	MANHOLE	5' DIAM	J	1043.61	1042.36	1038.11	4.25		24	149	1.00%	III	IN10.0	1036.62
IN10.3	107+43.96 WB	21.28	LT	INLET	2X3-FT	HM-S	1041.97	1040.97	1037.42	3.55	PIPE UNDERDRAIN CONNECTION	15	26	1.00%	III	IN10.2	1037.16
IN10.2	107+31.71 WB	1.50	RT	INLET	2X3-FT	H-S	1042.37	1041.37	1037.06	4.31		15	15	1.00%	III	IN10.1	1036.91
IN10.1	107+47.11 EB	1.50	LT	INLET	2X3-FT	H-S	1042.57	1041.57	1036.81	4.76		15	19	1.00%	III	IN10.0	1036.62
IN10.0	107+47.11 EB	17.02	RT	INLET	4' DIAM	T	1042.25	1041.25	1036.52	4.73	PIPE UNDERDRAIN CONNECTION	24	61	1.00%	III	MH9.0	1035.91
EW9.2	108+11.8 EB	49.70	RT	ENDWALL	---	---	---	---	1037.59	---	PIPE GRATE REQUIRED	18	7	4.00%	III	MH9.0	1037.07
MH9.0	108+23.23 EB	38.00	RT	MANHOLE	5' DIAM	J	1041.60	1040.35	1035.81	4.54		24	106	1.00%	III	MH7.0	1034.75
EW8.4	206+78.1 SB	30.60	LT	ENDWALL	---	---	---	---	1040.09	---		15	36	6.30%	III	IN8.3	1037.44
IN8.3	207+20.00 SB	20.05	LT	INLET	2X3-FT	HM-S	1042.06	1041.06	1037.34	3.72	PIPE UNDERDRAIN CONNECTION	15	24	1.00%	III	IN8.2	1037.10
IN8.2	207+30.00 SB	1.50	RT	INLET	2X3-FT	H-S	1042.40	1041.40	1037.00	4.40		15	14	2.00%	III	IN8.0	1036.72
IN8.1	207+23.78 NB	18.11	RT	INLET	2X3-FT	H-S	1042.06	1041.06	1037.00	4.06	PIPE UNDERDRAIN CONNECTION	15	20	2.00%	III	IN8.0	1036.60
IN8.0	207+30.00 NB	1.50	LT	INLET	4' DIAM	HM-S	1042.22	1041.22	1035.91	5.31		24	22	2.00%	III	MH7.0	1035.47
MH7.0	207+50.17 NB	6.92	LT	MANHOLE	5' DIAM	J	1042.80	1041.55	1034.65	6.90		24	68	1.00%	III	EW6.0	1033.92
EW6.0	1+01.50 C	59.70	RT	ENDWALL	---	---	---	---	1033.92	---	PIPE GRATE REQUIRED	---	---	---	---	---	---
EW14.1	212+28.9 SB	29.10	LT	ENDWALL	---	---	---	---	1037.60	---		12	31	7.57%	III	MH14.0	1034.80
EW14.2	212+30.00 NB	31.10	RT	ENDWALL	---	---	---	---	1037.42	---		12	33	6.72%	III	MH14.0	1034.80
MH14.0	212+30.00 NB	8.00	LT	MANHOLE	6' DIAM	J	1040.88	1039.63	1034.70	4.93		30	85	0.31%	III	MH5.0	1034.44
EW5.2	211+40.00 NB	52.00	LT	ENDWALL	---	---	---	---	1037.50	---		12	12	10.00%	III	IN5.1	1035.70
IN5.1	211+44.75 NB	34.70	LT	INLET	2X3-FT	H(D)	1040.00	1039.00	1034.75	4.25	PIPE UNDERDRAIN CONNECTION	15	31	1.00%	III	MH5.0	1034.44
MH5.0	211+44.75 NB	8.00	LT	MANHOLE	6' DIAM	J	1040.66	1039.41	1034.34	5.07		36	114	0.30%	III	IN4.0	1034.00
IN4.2	210+50.00 NB	33.96	RT	INLET	MEDIAN 1 GRATE	MS	1037.77	1036.77	1034.57	2.20	NO GRATE SLOPE	15	40	1.00%	III	IN4.1	1034.17
IN4.1	210+32.00 NB	2.22	LT	INLET	2X3-FT	H	1041.17	1040.17	1034.07	6.10		15	8	1.00%	III	IN4.0	1033.99
IN4.0	210+29.33 SB	2.11	RT	INLET	6' DIAM	H	1040.92	1039.92	1033.89	6.03		36	109	0.30%	III	MH3.0	1033.56
EW3.2	209+29.7 SB	45.40	LT	ENDWALL	---	---	---	---	1038.05	---	PIPE GRATE REQUIRED	18	49	2.00%	III	MH3.0	1036.95
MH3.0	2+35.86 C	25.39	LT	MANHOLE	6' DIAM	J	1042.89	1041.64	1033.46	8.18		36	98	0.30%	III	MH2.0	1033.17
IN2.2	1+58.08 C	1.50	LT	INLET	2X2.5	T	1041.77	1040.69	1036.54	4.15	PIPE UNDERDRAIN CONNECTION	15	10	2.00%	III	IN2.1	1036.34
IN2.3	1+45.14 C	21.50	RT	INLET	2X3-FT	H-S	1041.84	1040.76	1036.80	3.96		15	23	2.00%	III	IN2.1	1036.34
IN2.1	1+48.08 C	1.50	LT	INLET	2X2.5	T	1041.76	1040.76	1036.24	4.52	PIPE UNDERDRAIN CONNECTION	15	12	2.00%	III	MH2.0	1036.00
MH2.0	1+40.00 C	11.00	LT	MANHOLE	6' DIAM	J	1042.05	1040.80	1033.07	7.73		36	91	0.30%	III	EW1.0	1032.77
EW1.0	110+16.9 EB	56.07	RT	ENDWALL	---	---	---	---	1032.77	---	PIPE GRATE REQUIRED	---	---	---	---	---	---
IN12.3	205+50.00 NB	18.50	LT	INLET	2X3-FT	HM	1045.37	1044.37	1041.33	3.04	PIPE UNDERDRAIN CONNECTION	15	20	0.50%	III	IN12.2	1041.23
IN12.2	205+50.00 SB	1.50	RT	INLET	2X3-FT	HM	1045.71	1044.71	1041.13	3.58		15	16	0.50%	III	IN12.1	1041.05
IN12.1	205+50.21 NB	1.50	LT	INLET	2X3-FT	HM	1045.17	1044.17	1040.95	3.22		15	23	0.52%	III	EW12.0	1040.80
EW12.0	205+50.00 NB	27.80	RT	ENDWALL	---	---	---	---	1040.80	---		---	---	---	---	---	---
IN13.2	113+88.22 WB	4.77	RT	INLET	2X3-FT	HM	1037.93	1036.93	1033.32	3.61		15	8	1.00%	III	IN13.1	1033.24
IN13.1	113+88.00 EB	1.50	LT	INLET	2X3-FT	HM	1038.13	1037.13	1033.14	3.99		15	34	1.00%	III	EW13.0	1032.73
EW13.0	113+88.00 EB	39.60	RT	ENDWALL	---	---	---	---	1032.73	---		---	---	---	---	---	---
IN15.1	199+77.00 NB	31.00	RT	INLET	MEDIAN 1 GRATE	MS	1047.34	1047.15	1046.20	0.95	6:1 GRATE SLOPE	6	60	0.85%	---	EW15.0	1045.69
EW15.0	199+09.5 NB	31.00	RT	ENDWALL	---	---	---	---	1045.69	---		---	---	---	---	---	---

STRUCTURE DEPTH = RIM ELEVATION MINUS 15" FOR STRUCTURES WITH TYPE J COVERS (9" CASTING, 6" ADJUSTING)
STRUCTURE DEPTH = FLANGE ELEVATION MINUS 12" FOR STRUCTURES WITH ALL H COVER TYPES (6" CASTING, 6" ADJUSTING)
STRUCTURE DEPTH = FLANGE ELEVATION MINUS 13" FOR STRUCTURES WITH TYPE T COVERS (7" CASTING, 6" ADJUSTING)
STRUCTURE DEPTH = RIM ELEVATION MINUS 2.25" FOR STRUCTURES WITH TYPE MS COVER

PIPE LENGTHS DO NOT INCLUDE ENDWALLS
OFFSET IS TO CENTER OF STRUCTURE FOR MANHOLES AND INLETS OR TO END OF STRUCTURE ENDWALLS
H(D) = DRIVEWAY INLET COVER

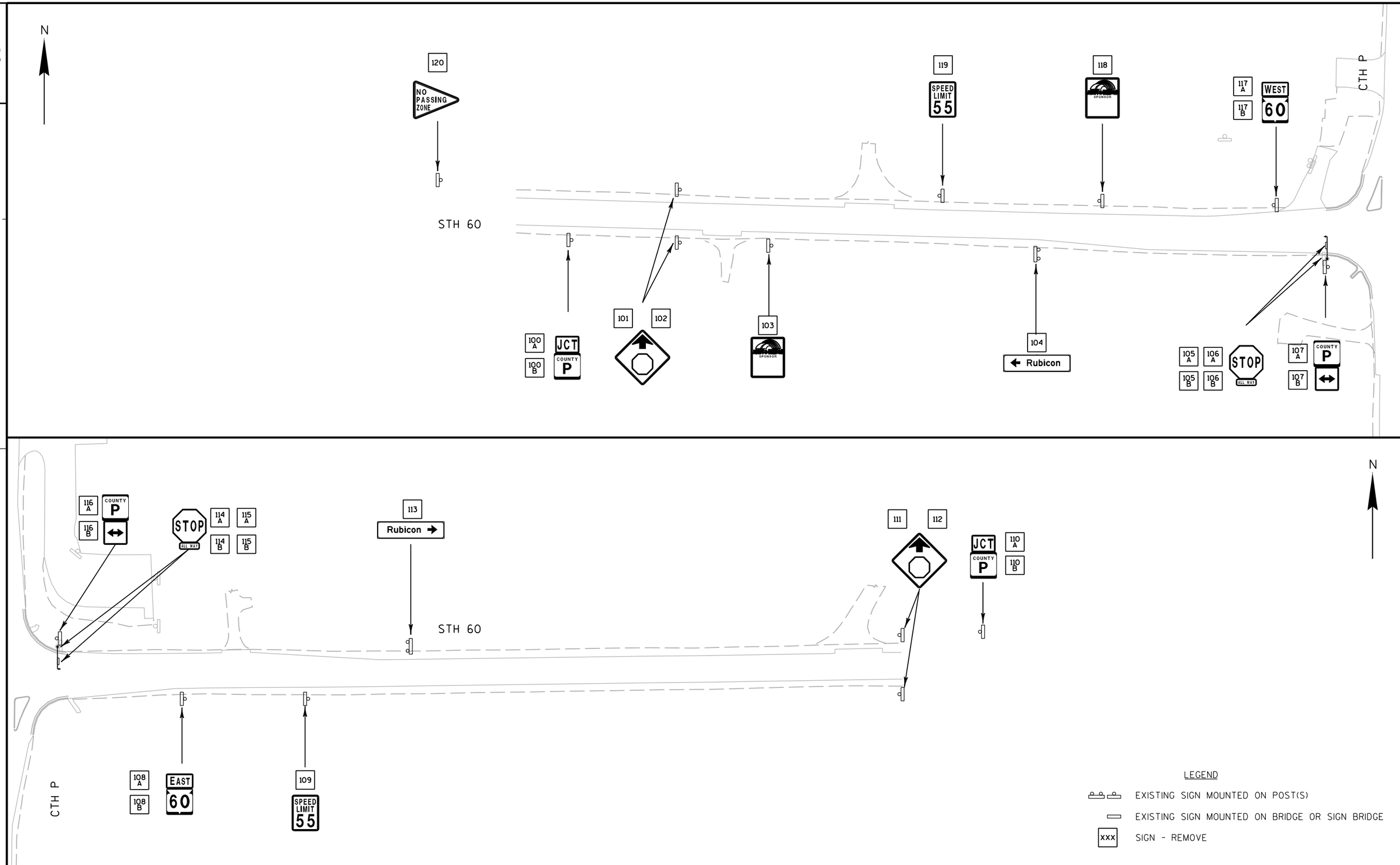

PROJECT NO:3042-00-73	HWY:STH 60	COUNTY:DODGE	SIGN REMOVALS	SHEET 31	E

FILE NAME : G:\2011\11981 STH 60 & CTH P Rubicon\Micros\Plansheets\023201_ps.dgn PLOT DATE : 7/19/2013 PLOT BY : O.R.E., Inc. PLOT NAME : PLOT SCALE : 100.0000 sf / in.

WISDOT/CADDS SHEET 42

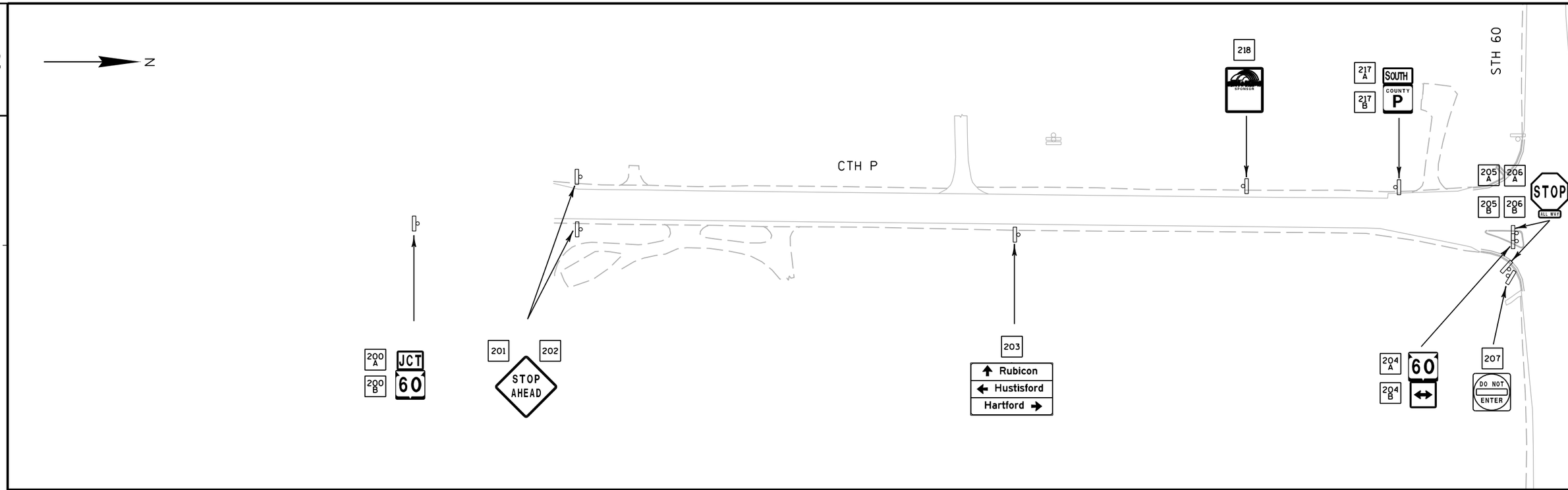

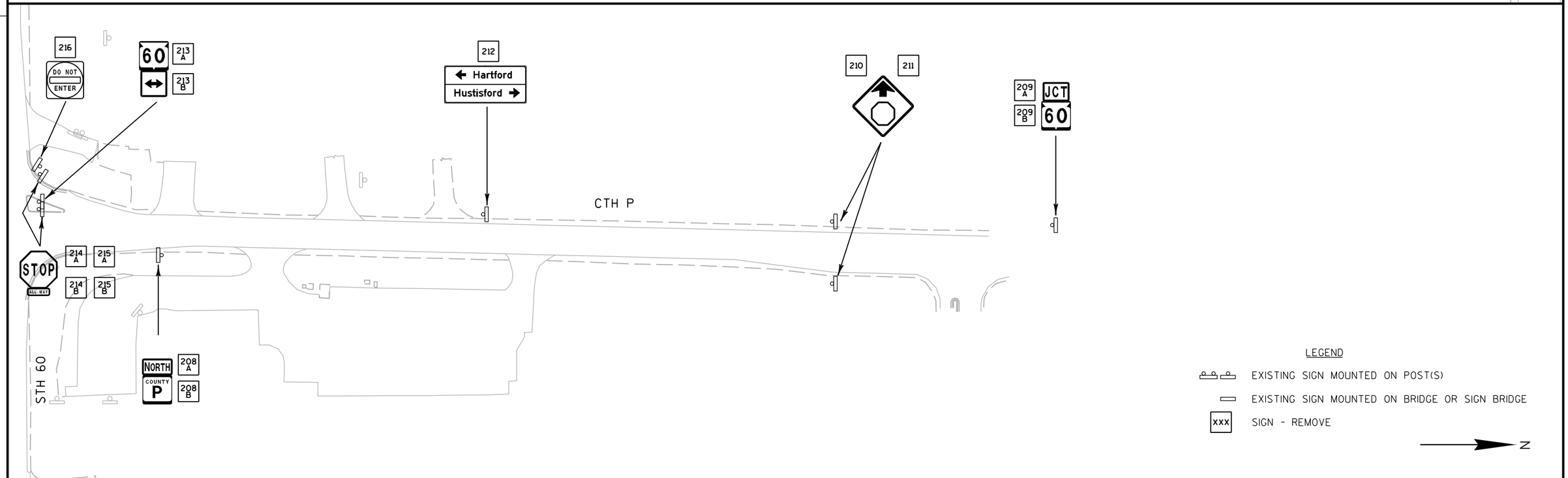

PROJECT NO:3042-00-73	HWY:STH 60	COUNTY:DODGE	SIGN REMOVALS	SHEET 32	E

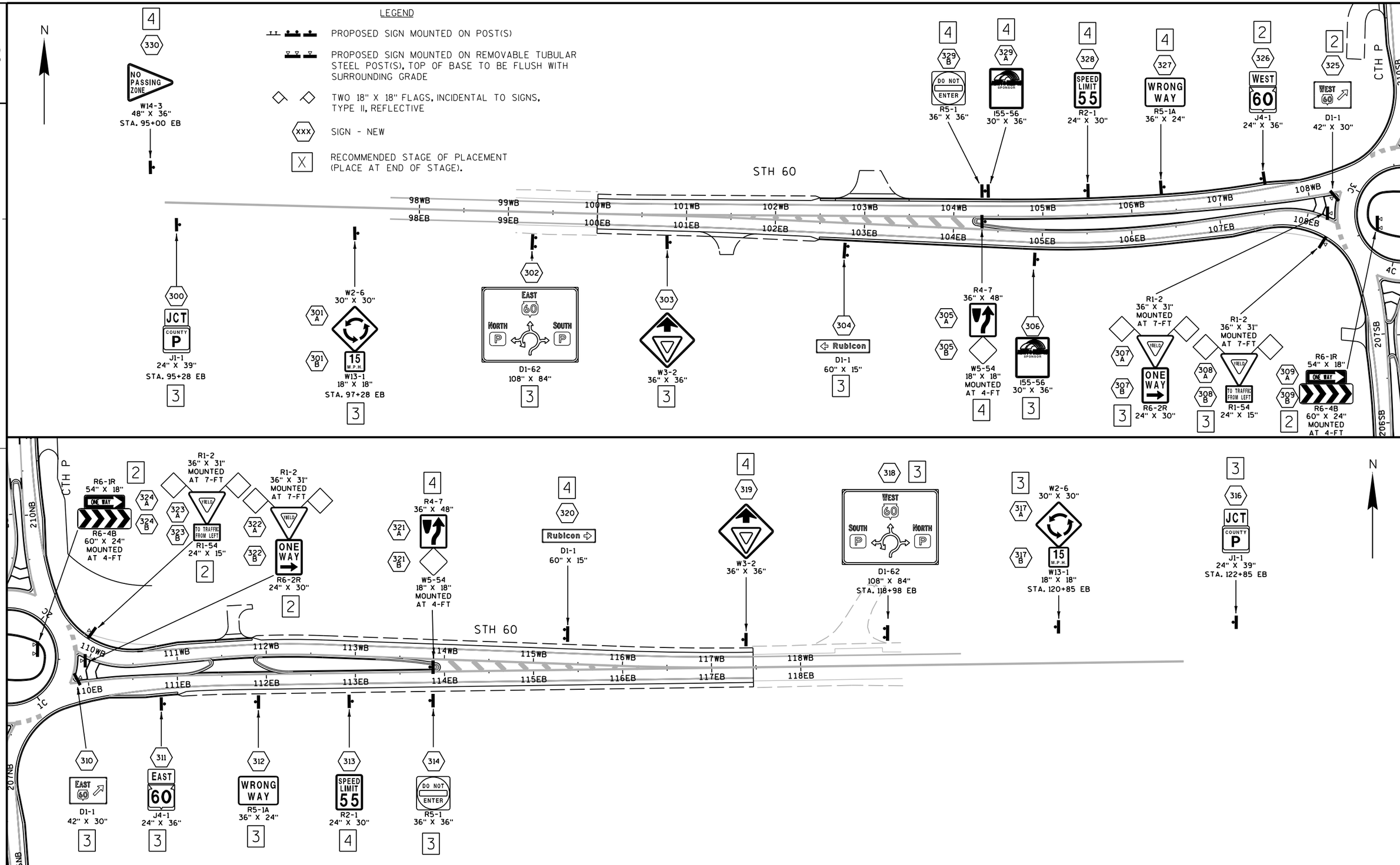

PROJECT NO:3042-00-73	HWY:STH 60	COUNTY:DODGE	PERMANENT SIGNS	SHEET 33	E

FILE NAME : G:\2011\11981 STH 60 & CTH P Rubicon\Micros\Plansheets\023203_ps.dgn PLOT DATE : 7/19/2013 PLOT BY : O.R.E., Inc. PLOT NAME : PLOT SCALE : 100.0000 sf / in.

WISDOT/CADDS SHEET 42

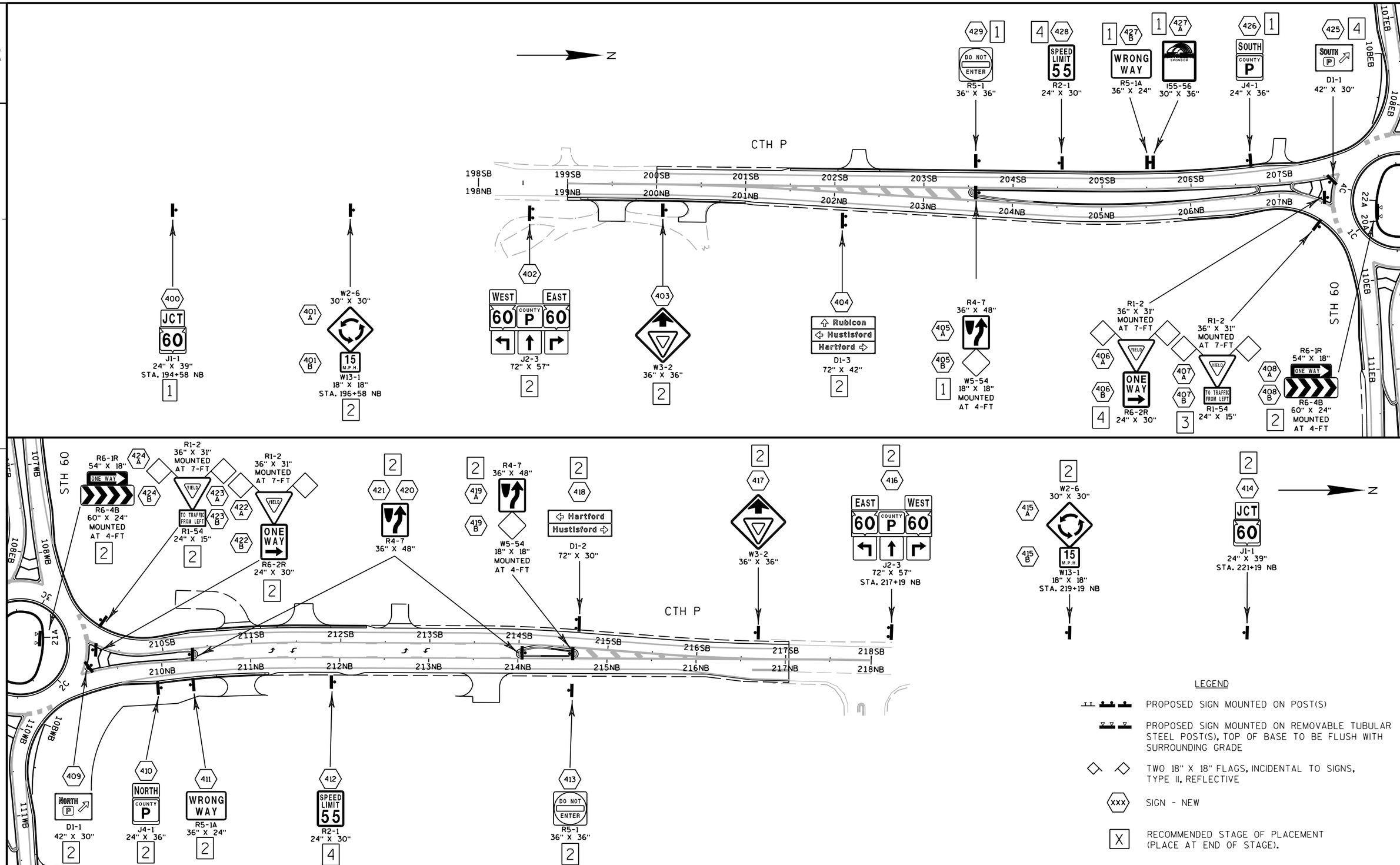

LEGEND

- PROPOSED SIGN MOUNTED ON POST(S)
- PROPOSED SIGN MOUNTED ON REMOVABLE TUBULAR STEEL POST(S), TOP OF BASE TO BE FLUSH WITH SURROUNDING GRADE
- TWO 18" X 18" FLAGS, INCIDENTAL TO SIGNS, TYPE II, REFLECTIVE
- (XXX) SIGN - NEW
- [X] RECOMMENDED STAGE OF PLACEMENT (PLACE AT END OF STAGE).

PROJECT NO:3042-00-73	HWY:STH 60	COUNTY:DODGE	PERMANENT SIGNS	SHEET 34	E

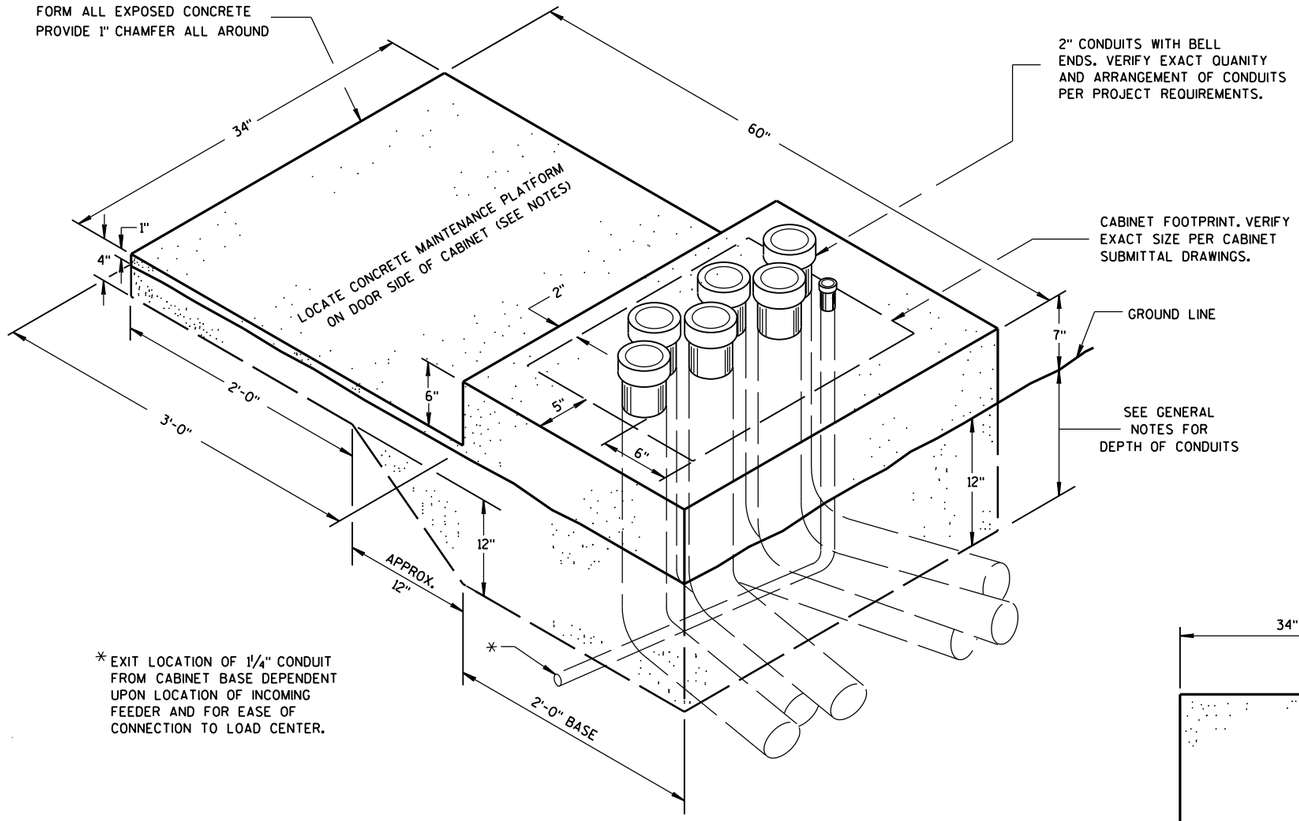

* EXIT LOCATION OF 1¼" CONDUIT FROM CABINET BASE DEPENDENT UPON LOCATION OF INCOMING FEEDER AND FOR EASE OF CONNECTION TO LOAD CENTER.

ISOMETRIC VIEW

CONCRETE CONTROL CABINET BASE TYPE SPECIAL

(C.Y. CONCRETE = APPROX. 0.4)

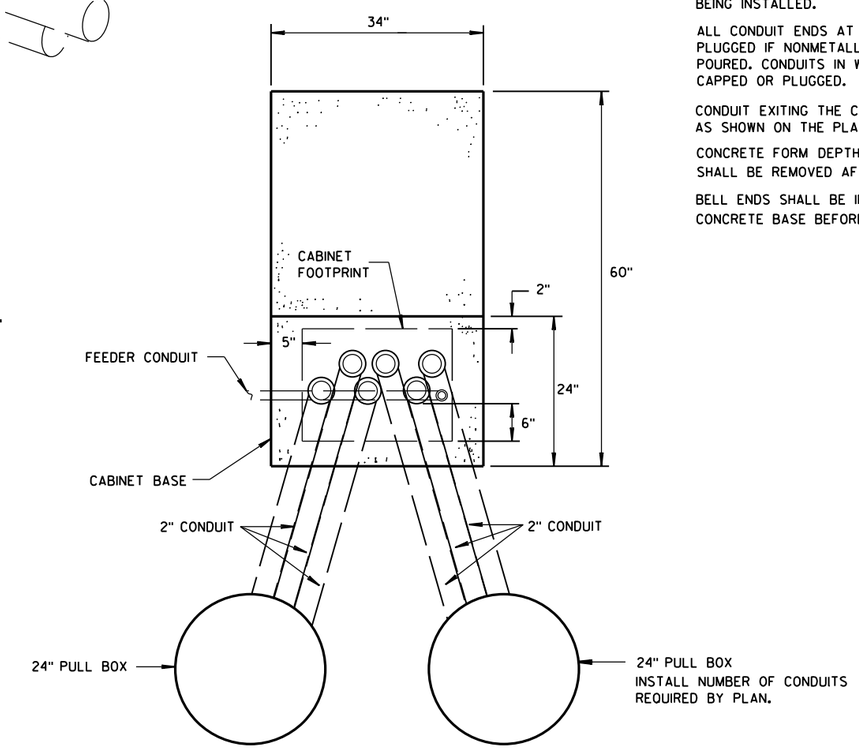

PLAN VIEW

CONCRETE CONTROL CABINET BASE TYPE SPECIAL

GENERAL NOTES

DETAILS OF CONSTRUCTION, MATERIALS AND WORKMANSHIP NOT SHOWN ON THIS DRAWING SHALL CONFORM TO THE PERTINENT REQUIREMENTS OF THE CONTRACT.

INSTALL FOUR STAINLESS STEEL APPROVED CONCRETE MASONRY ANCHORS TO ANCHOR THE CABINET BASES. THE ANCHORS SHALL BE LOCATED AS DIRECTED BY THE ENGINEER TO PROPERLY ANCHOR THE CONTROL CABINET TO THE BASE.

WHEN REQUIRED TO CONNECT NONMETALLIC CONDUIT TO METALLIC CONDUIT, ONLY ADAPTER FITTINGS, U.L. LISTED FOR ELECTRICAL USE, SHALL BE USED.

CONDUIT HEIGHT ABOVE THE CONCRETE BASE SHALL BE 1 INCH.

DEPTH OF CONDUIT INSTALLED BELOW THE TRAVELED WAY SHALL BE 24 INCHES MINIMUM AND 36 INCHES MAXIMUM.

DEPTH OF CONDUIT INSTALLED THAT IS NOT BELOW THE TRAVELED WAY SHALL BE 18 INCHES MINIMUM AND 36 INCHES MAXIMUM.

ANY EXCEPTION TO THE MAXIMUM DEPTH SHALL BE ONLY WITH THE WRITTEN APPROVAL OF THE ENGINEER.

CONTROL CABINET BASE TOP SURFACE SHALL BE TROWEL FINISHED SMOOTH AND LEVEL.

MAINTENANCE PLATFORM SHALL BE FLOAT OR BROOM FINISHED AND BE LEVEL.

MAINTENANCE PLATFORMS ARE NOT REQUIRED WHEN THE SURROUNDING AREA IS PAVED.

MINIMUM BENDING RADIUS OF CONDUIT = 6 X THE DIAMETER.

ALL METALLIC CONDUIT ENDS SHALL BE REAMED AND THREADED.

CAP ALL BELOW GRADE METALLIC CONDUIT ENDS IN WHICH WIRE OR CABLE IS NOT BEING INSTALLED.

PLUG ALL BELOW GRADE NONMETALLIC CONDUIT ENDS IN WHICH WIRE OR CABLE IS NOT BEING INSTALLED.

ALL CONDUIT ENDS AT THE TOP OF CONCRETE BASES SHALL BE CAPPED IF METALLIC OR PLUGGED IF NONMETALLIC IMMEDIATELY AFTER PLACEMENT AND BEFORE CONCRETE IS POURED. CONDUITS IN WHICH WIRE OR CABLE IS NOT BEING INSTALLED SHALL REMAIN CAPPED OR PLUGGED.

CONDUIT EXITING THE CONCRETE BASE (SIX THREE INCH) SHALL TERMINATE IN PULL BOXES AS SHOWN ON THE PLANS.

CONCRETE FORM DEPTH BELOW FINISHED GRADE SHALL BE 6" MAXIMUM. CONCRETE FORMS SHALL BE REMOVED AFTER CONCRETE HAS SET.

BELL ENDS SHALL BE INSTALLED ON ALL PVC CONDUIT EXPOSED AT THE TOP OF THE CONCRETE BASE BEFORE INSTALLATION OF CABLE OR WIRE.

2

LIGHTING PLAN LEGEND

STATION (LOCATION)

XXX+XX - XX.XX' XT

III - A - 8 - 6 - A - (L-13-LOXXX-0001)

- POLE NUMBER
- CIRCUIT NUMBER
- BASE TYPE
- MAST ARM LENGTH IN FEET
- LUMINAIRES UTILITY LED CATEGORY
- DISTRIBUTION TYPE

SINGLE ARM LIGHTING UNIT

CONTROL CABINET AND BASE

PULL BOX 24" X 42"

NONMETALLIC CONDUIT, SCHEDULE 40, 2-INCH UNLESS NOTED OTHERWISE)

STREET LIGHTING PLANS PREPARED BY

WISCONSIN PROFESSIONAL ENGINEER
MIKE D. SCARMON
E-37613
EVANSVILLE, WI

8/1/2013 (DATE) (SIGNATURE)

2

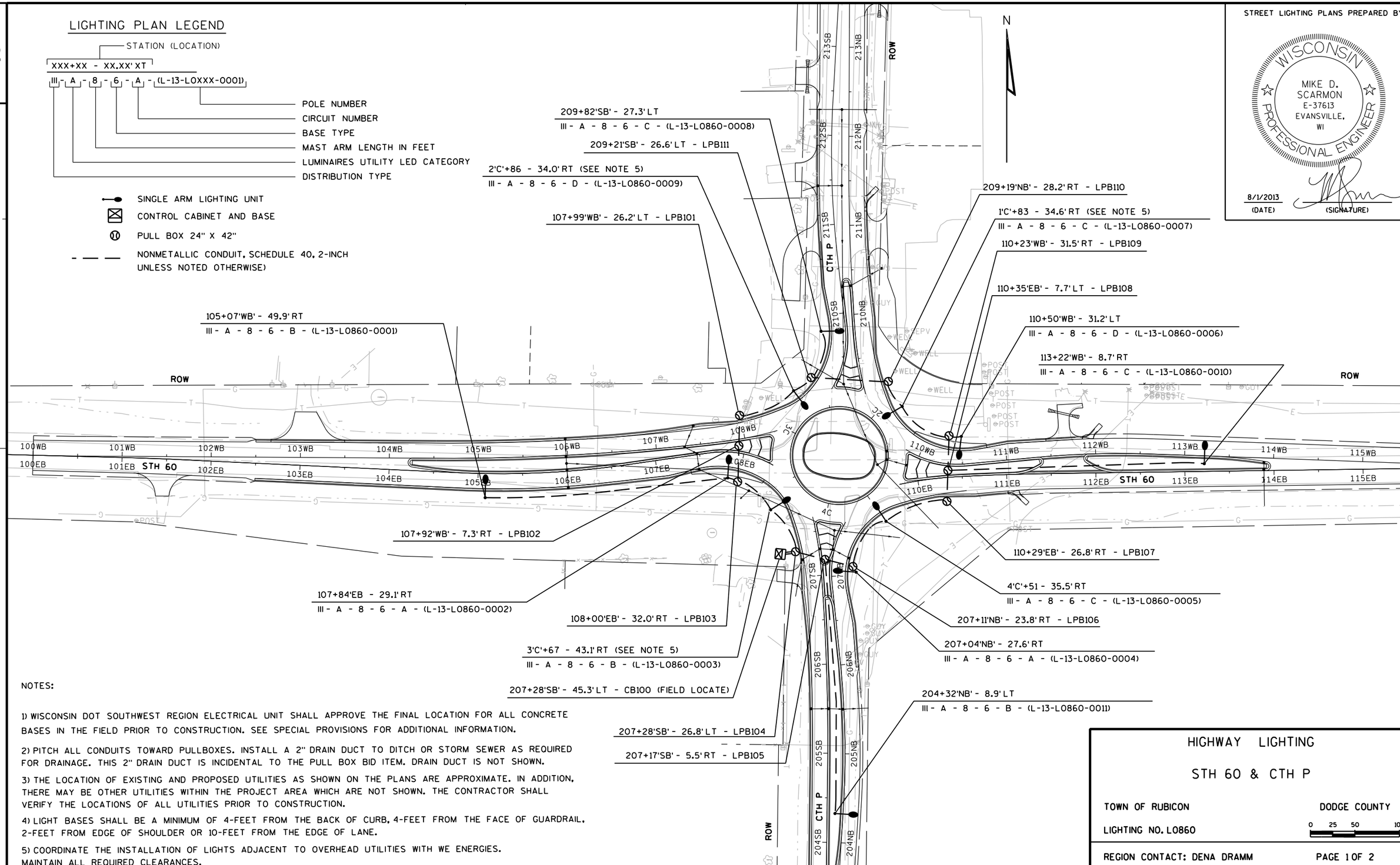

NOTES:

1) WISCONSIN DOT SOUTHWEST REGION ELECTRICAL UNIT SHALL APPROVE THE FINAL LOCATION FOR ALL CONCRETE BASES IN THE FIELD PRIOR TO CONSTRUCTION. SEE SPECIAL PROVISIONS FOR ADDITIONAL INFORMATION.

2) PITCH ALL CONDUITS TOWARD PULLBOXES. INSTALL A 2" DRAIN DUCT TO DITCH OR STORM SEWER AS REQUIRED FOR DRAINAGE. THIS 2" DRAIN DUCT IS INCIDENTAL TO THE PULL BOX BID ITEM. DRAIN DUCT IS NOT SHOWN.

3) THE LOCATION OF EXISTING AND PROPOSED UTILITIES AS SHOWN ON THE PLANS ARE APPROXIMATE. IN ADDITION, THERE MAY BE OTHER UTILITIES WITHIN THE PROJECT AREA WHICH ARE NOT SHOWN. THE CONTRACTOR SHALL VERIFY THE LOCATIONS OF ALL UTILITIES PRIOR TO CONSTRUCTION.

4) LIGHT BASES SHALL BE A MINIMUM OF 4-FEET FROM THE BACK OF CURB, 4-FEET FROM THE FACE OF GUARDRAIL, 2-FEET FROM EDGE OF SHOULDER OR 10-FEET FROM THE EDGE OF LANE.

5) COORDINATE THE INSTALLATION OF LIGHTS ADJACENT TO OVERHEAD UTILITIES WITH WE ENERGIES. MAINTAIN ALL REQUIRED CLEARANCES.

HIGHWAY LIGHTING

STH 60 & CTH P

TOWN OF RUBICON — DODGE COUNTY

LIGHTING NO. L0860 — 0 25 50 100

REGION CONTACT: DENA DRAMM — PAGE 1 OF 2

PROJECT NO: 3042-00-73	HWY: STH 60	COUNTY: DODGE	LIGHTING PLAN	SHEET 36	E

2

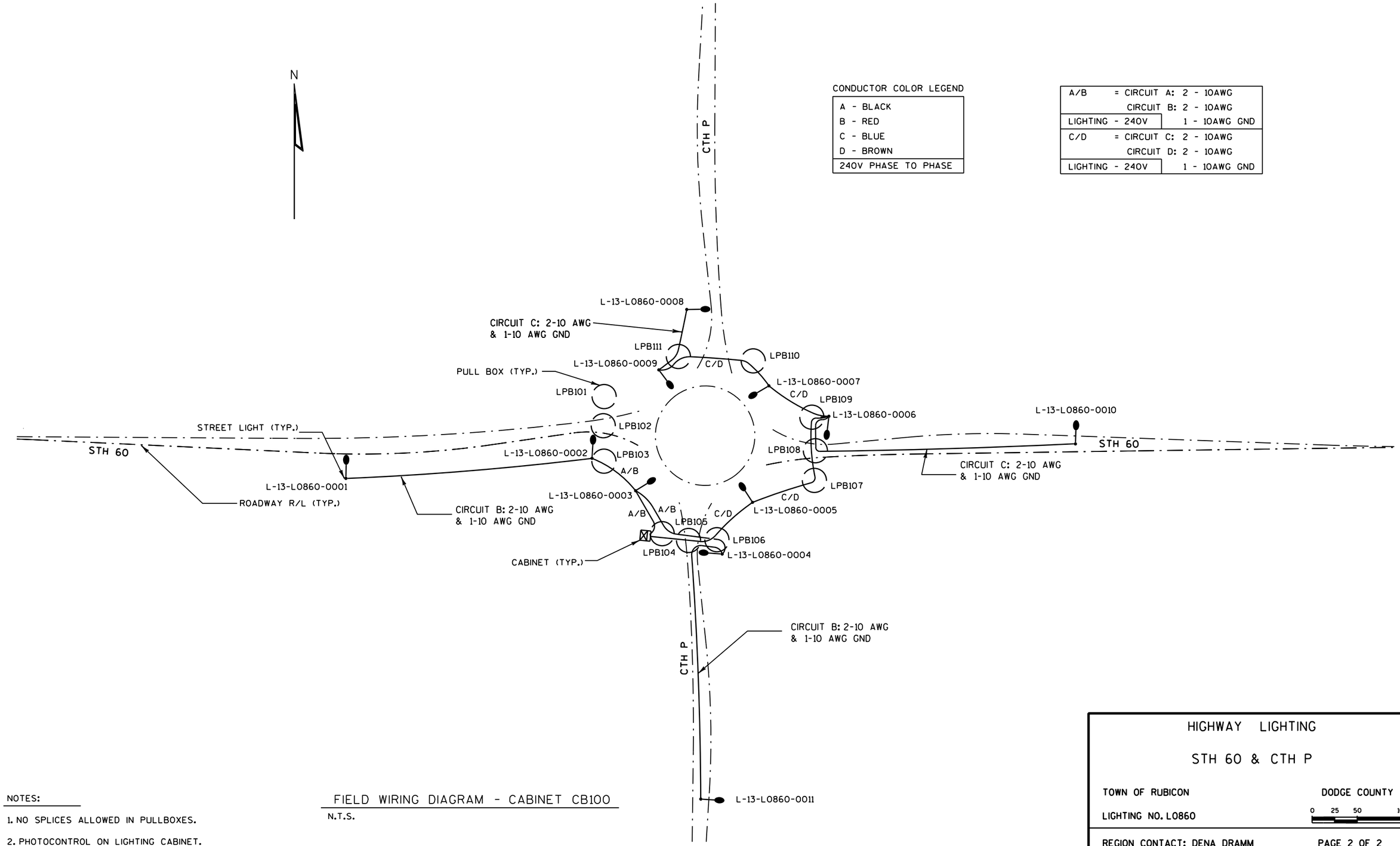

CONDUCTOR COLOR LEGEND

A - BLACK
B - RED
C - BLUE
D - BROWN
240V PHASE TO PHASE

A/B	= CIRCUIT A:	2 - 10AWG
	CIRCUIT B:	2 - 10AWG
LIGHTING - 240V		1 - 10AWG GND
C/D	= CIRCUIT C:	2 - 10AWG
	CIRCUIT D:	2 - 10AWG
LIGHTING - 240V		1 - 10AWG GND

NOTES:

1. NO SPLICES ALLOWED IN PULLBOXES.
2. PHOTOCONTROL ON LIGHTING CABINET.

FIELD WIRING DIAGRAM - CABINET CB100

N.T.S.

HIGHWAY LIGHTING

STH 60 & CTH P

TOWN OF RUBICON — DODGE COUNTY

LIGHTING NO. L0860 — 0 25 50 100

REGION CONTACT: DENA DRAMM — PAGE 2 OF 2

PROJECT NO: 3042-00-73	HWY: STH 60	COUNTY: DODGE	LIGHTING PLAN	SHEET 37	E

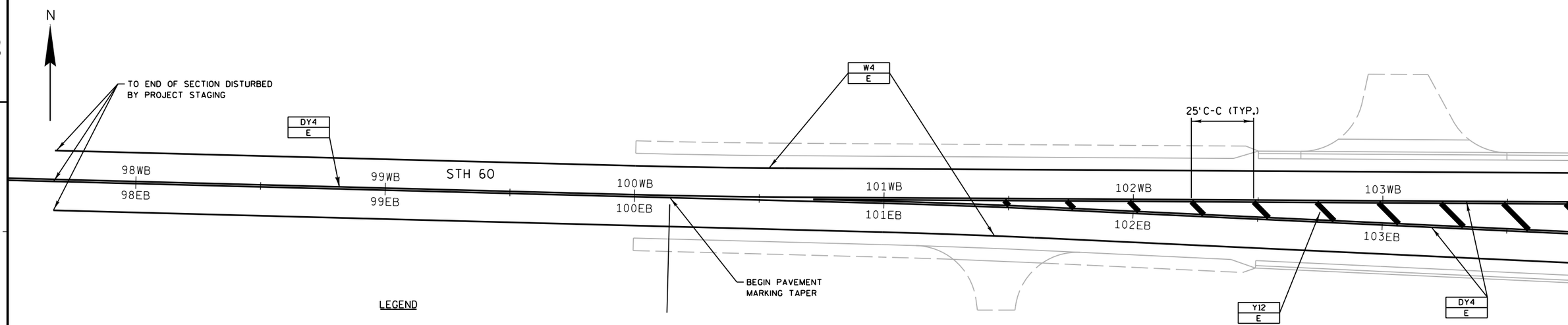

LEGEND

MARKING		MATERIAL	
CBY	PAVEMENT MARKING CURB, YELLOW	E	EPOXY
INY	PAVEMENT MARKING ISLAND NOSE, YELLOW	GTP	GROOVED PREFORMED THERMOPLASTIC
W4	PAVEMENT MARKING 4-INCH, WHITE	GWRT	GROOVED WET REFLECTIVE TAPE
Y4	PAVEMENT MARKING 4-INCH, YELLOW		
DY4	PAVEMENT MARKING 4-INCH, DOUBLE YELLOW		
Y4-12.5	PAVEMENT MARKING 4-INCH, YELLOW, 12.5' SEG., 37.5' GAP		
W8	PAVEMENT MARKING 8-INCH, WHITE		
W18-2	PAVEMENT MARKING 18-INCH, WHITE, 2' SEG., 2' GAP		
DY12	PAVEMENT MARKING DIAGONAL, 12-INCH, YELLOW		

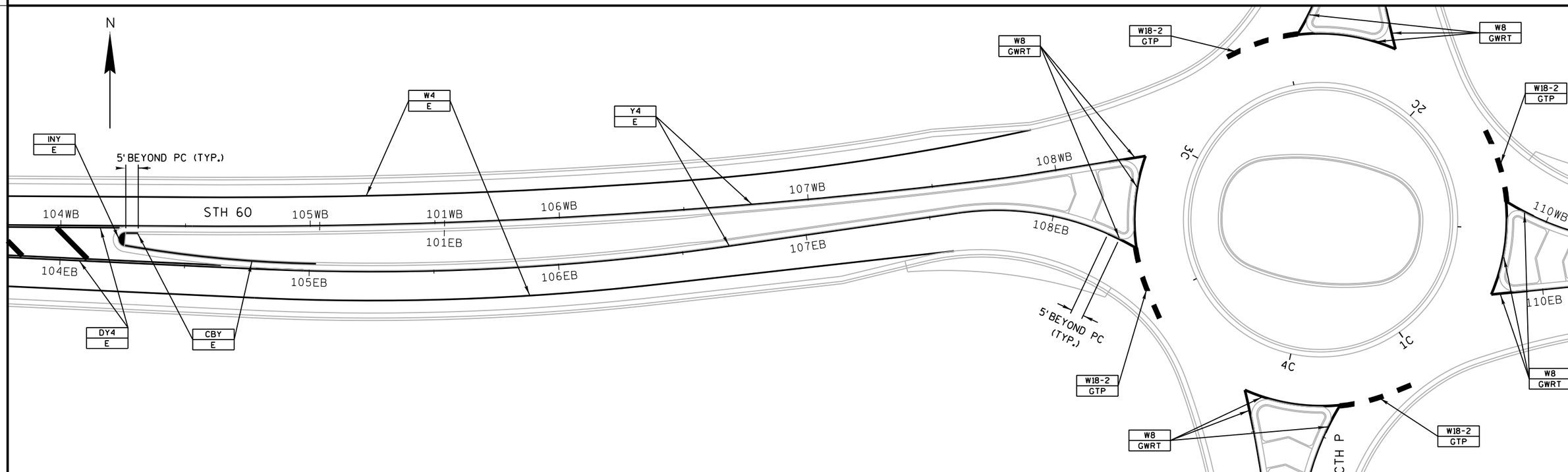

PROJECT NO:3042-00-73	HWY:STH 60	COUNTY:DODGE	PAVEMENT MARKING	SHEET 38	E

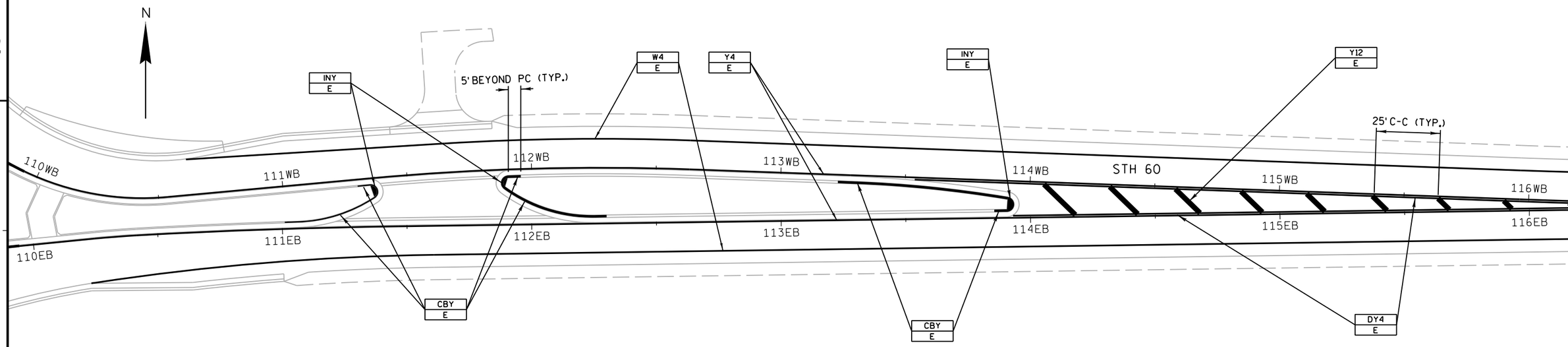

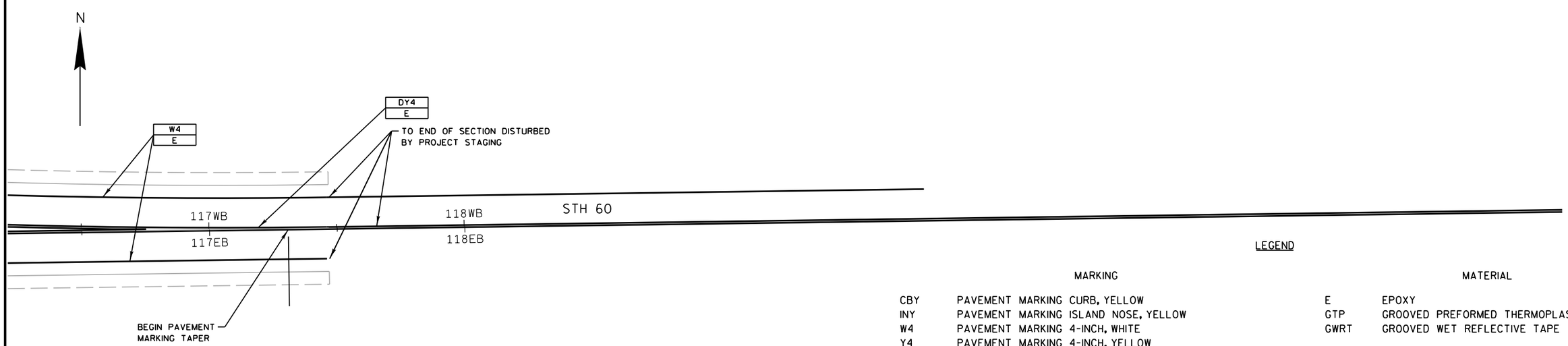

LEGEND

MARKING		MATERIAL	
CBY	PAVEMENT MARKING CURB, YELLOW	E	EPOXY
INY	PAVEMENT MARKING ISLAND NOSE, YELLOW	GTP	GROOVED PREFORMED THERMOPLASTIC
W4	PAVEMENT MARKING 4-INCH, WHITE	GWRT	GROOVED WET REFLECTIVE TAPE
Y4	PAVEMENT MARKING 4-INCH, YELLOW		
DY4	PAVEMENT MARKING 4-INCH, DOUBLE YELLOW		
Y4-12.5	PAVEMENT MARKING 4-INCH, YELLOW, 12.5' SEG., 37.5' GAP		
W8	PAVEMENT MARKING 8-INCH, WHITE		
W18-2	PAVEMENT MARKING 18-INCH, WHITE, 2' SEG., 2' GAP		
DY12	PAVEMENT MARKING DIAGONAL, 12-INCH, YELLOW		

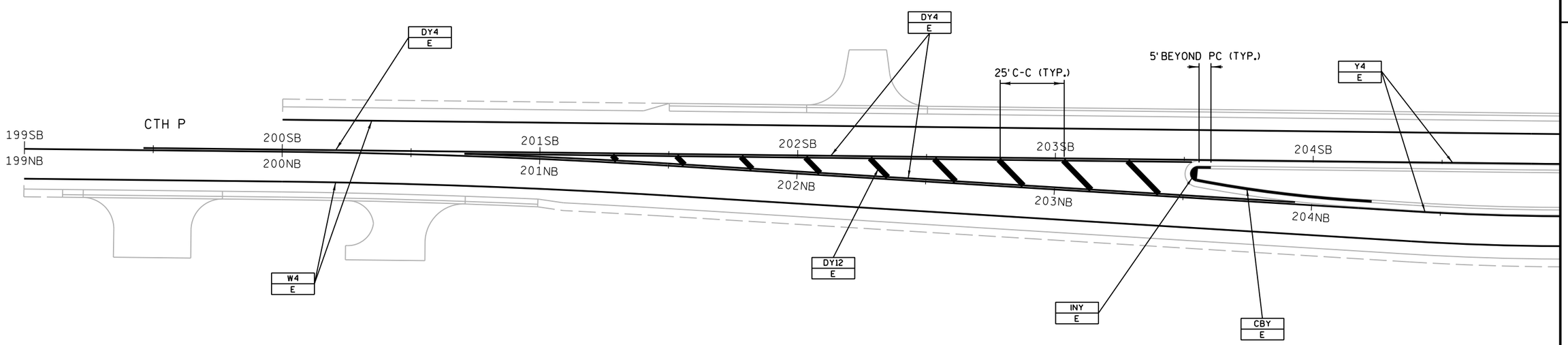

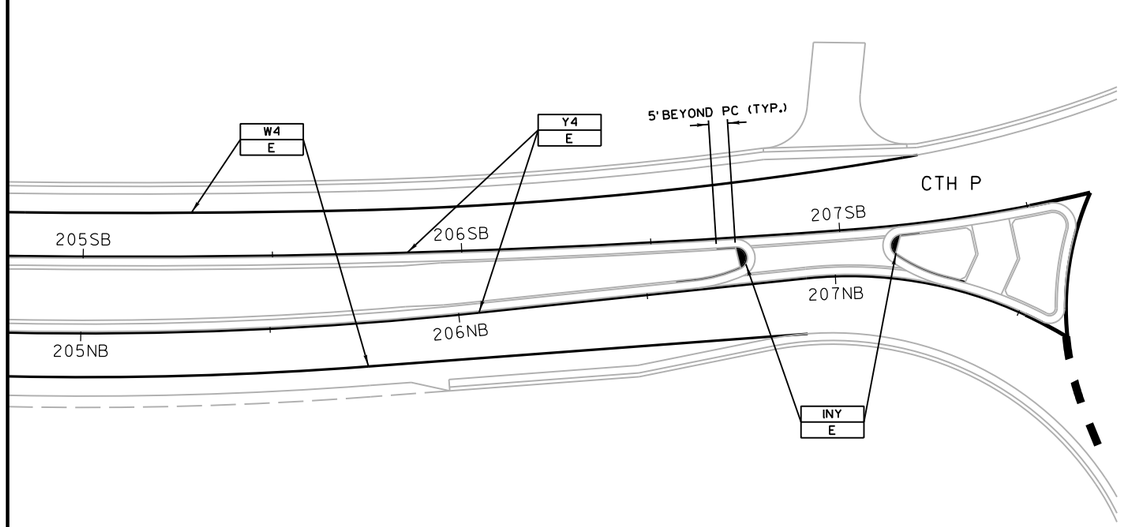

LEGEND

MARKING		MATERIAL	
CBY	PAVEMENT MARKING CURB, YELLOW	E	EPOXY
INY	PAVEMENT MARKING ISLAND NOSE, YELLOW	GTP	GROOVED PREFORMED THERMOPLASTIC
W4	PAVEMENT MARKING 4-INCH, WHITE	GWRT	GROOVED WET REFLECTIVE TAPE
Y4	PAVEMENT MARKING 4-INCH, YELLOW		
DY4	PAVEMENT MARKING 4-INCH, DOUBLE YELLOW		
Y4-12.5	PAVEMENT MARKING 4-INCH, YELLOW, 12.5' SEG., 37.5' GAP		
W8	PAVEMENT MARKING 8-INCH, WHITE		
W18-2	PAVEMENT MARKING 18-INCH, WHITE, 2' SEG., 2' GAP		
DY12	PAVEMENT MARKING DIAGONAL, 12-INCH, YELLOW		
ARW2	PAVEMENT MARKING ARROWS, TYPE 2, WHITE		

PROJECT NO:3042-00-73	HWY:STH 60	COUNTY:DODGE	PAVEMENT MARKING	SHEET 40	E

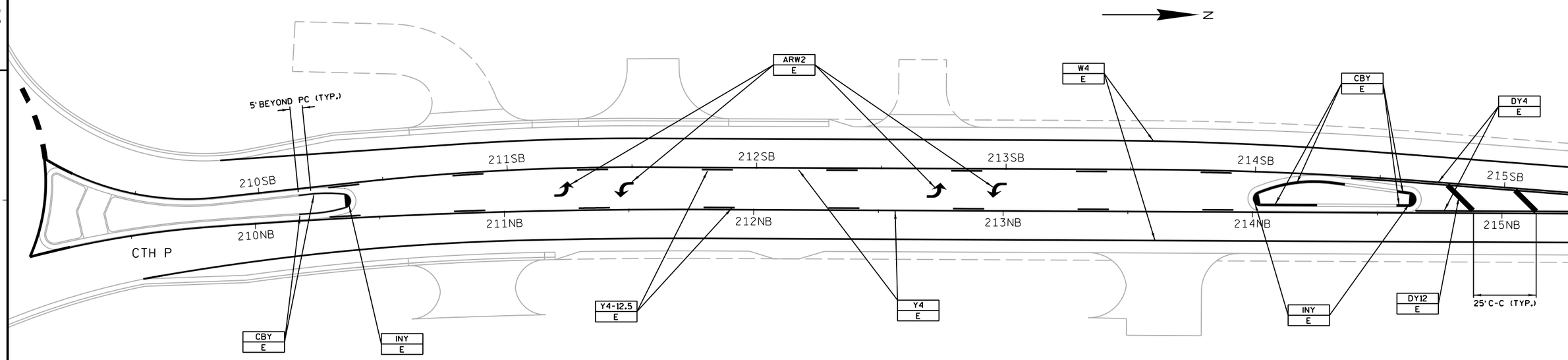

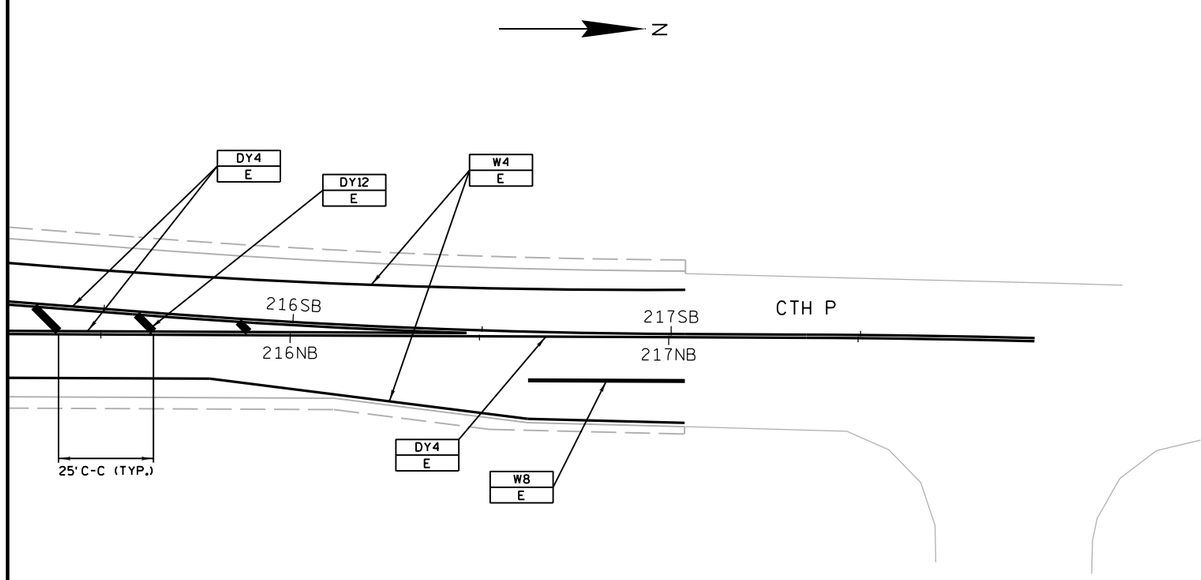

LEGEND

MARKING		MATERIAL	
CBY	PAVEMENT MARKING CURB, YELLOW	E	EPOXY
INY	PAVEMENT MARKING ISLAND NOSE, YELLOW	GTP	GROOVED PREFORMED THERMOPLASTIC
W4	PAVEMENT MARKING 4-INCH, WHITE	GWRT	GROOVED WET REFLECTIVE TAPE
Y4	PAVEMENT MARKING 4-INCH, YELLOW		
DY4	PAVEMENT MARKING 4-INCH, DOUBLE YELLOW		
Y4-12.5	PAVEMENT MARKING 4-INCH, YELLOW, 12.5' SEG., 37.5' GAP		
W8	PAVEMENT MARKING 8-INCH, WHITE		
W18-2	PAVEMENT MARKING 18-INCH, WHITE, 2' SEG., 2' GAP		
DY12	PAVEMENT MARKING DIAGONAL, 12-INCH, YELLOW		
ARW2	PAVEMENT MARKING ARROWS, TYPE 2, WHITE		

PROJECT NO:3042-00-73	HWY:STH 60	COUNTY:DODGE	PAVEMENT MARKING	SHEET 41	E

STAGE 1 DETOUR ROUTE

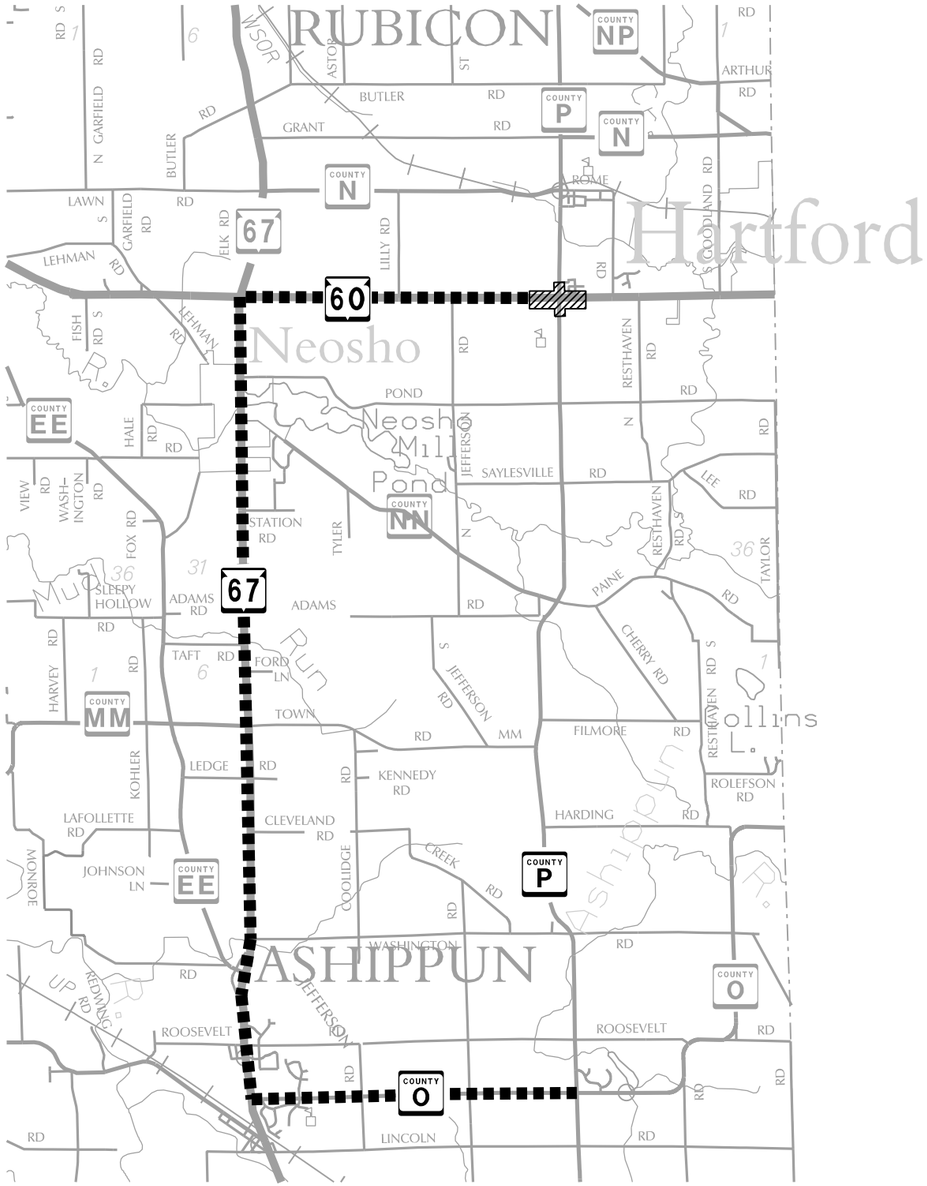

NOT TO SCALE

STAGE 2 DETOUR ROUTE

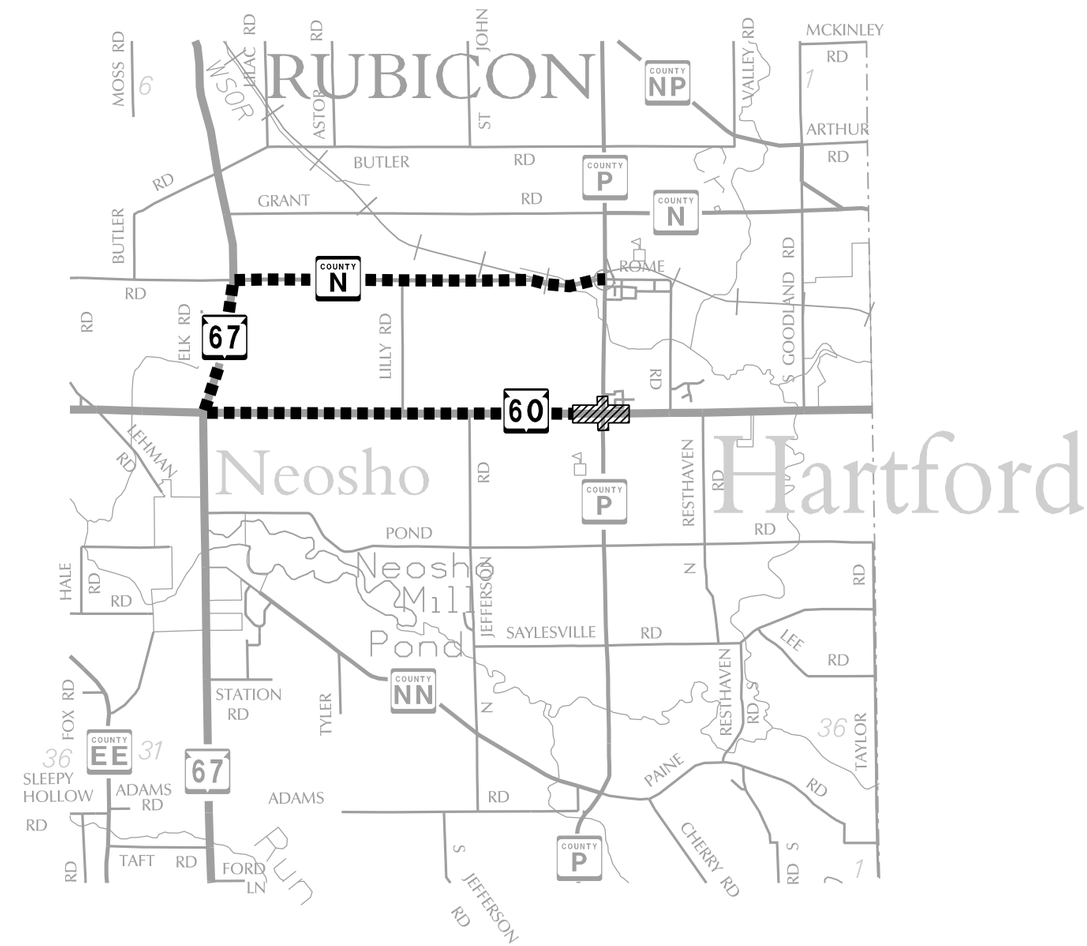

NOT TO SCALE

LEGEND

DETOUR ROUTE

WORK AREA

2

LEGEND

- TYPE III BARRICADE
- TYPE III BARRICADE WTH ATTACHED SIGN
- SIGN ON PERMANENT SUPPORT
- TYPE A WARNING LIGHT (FLASHING)
- WORK AREA
- DETOUR ROUTE

SOUTH M3-3 24" X 12"
NORTH M3-1 24" X 12"
DETOUR M4-8 24" X 12"
END DETOUR M4-8A 24" X 18"
M05-1L 21" X 21"
M06-1 21" X 21"
M06-1 21" X 21"
M05-1R 21" X 21"
COUNTY P M1-5A 24" X 24"
DETOUR AHEAD W20-2 48" X 48"
DETOUR NEXT X MILES G20-51 60" X 24"
R11-3 60" X 30" ROAD CLOSED XX MILES AHEAD LOCAL TRAFFIC ONLY
TYPE III BARRICADE

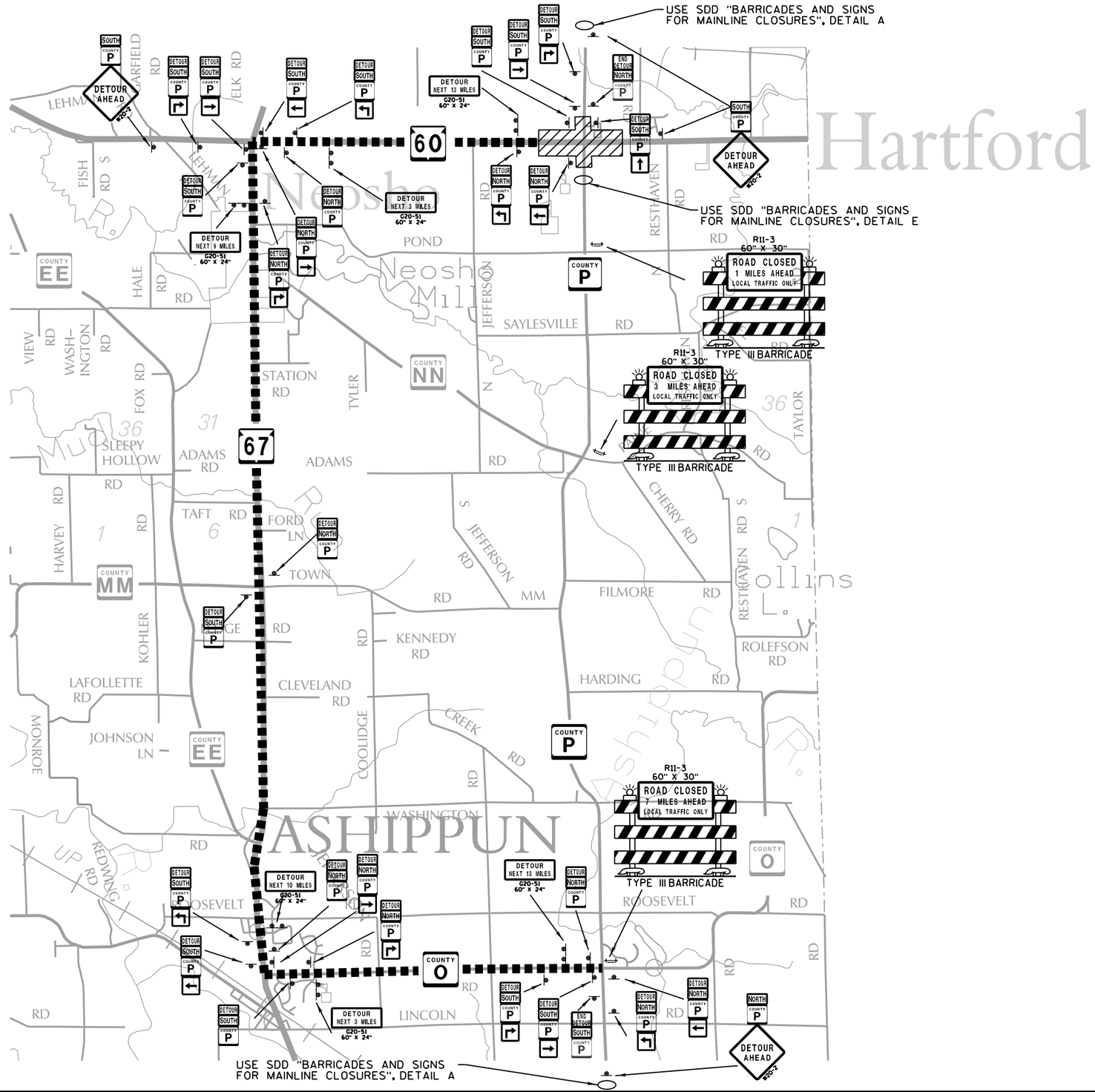

PROJECT NO:3042-00-73	HWY:STH 60	COUNTY:DODGE	DETOUR SIGNING - STAGE 1	SHEET 43	E

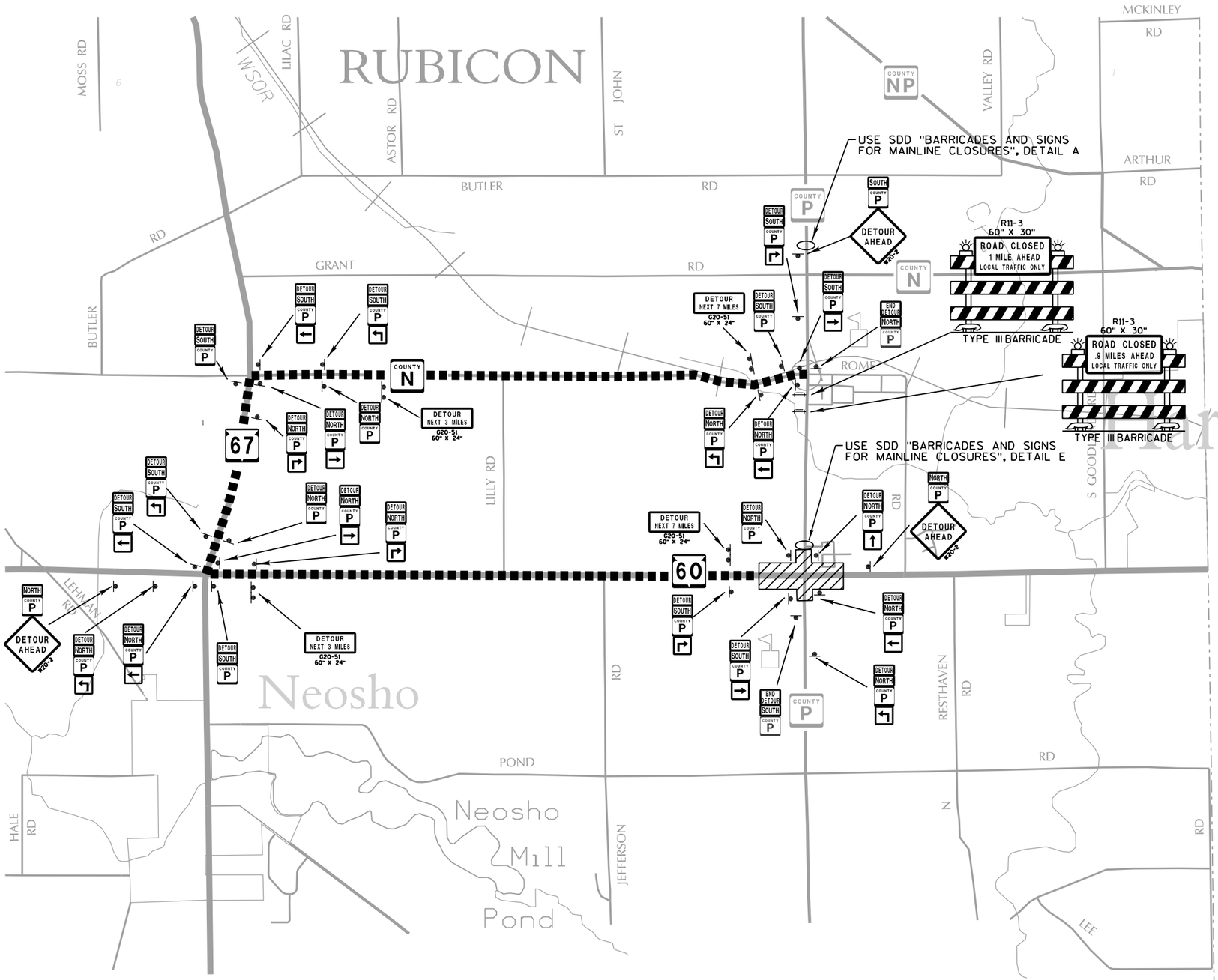

LEGEND

- TYPE III BARRICADE
- TYPE III BARRICADE WTH ATTACHED SIGN
- SIGN ON PERMANENT SUPPORT
- TYPE A WARNING LIGHT (FLASHING)
- WORK AREA
- DETOUR ROUTE

SOUTH M3-3 24" X 12"	NORTH M3-1 24" X 12"	DETOUR M4-8 24" X 12"	END DETOUR M4-8A 24" X 18"
M05-1L 21" X 21"	M06-1 21" X 21"	M06-1 21" X 21"	M05-1R 21" X 21"
COUNTY P M1-5A 24" X 24"	DETOUR AHEAD W20-2 48" X 48"	DETOUR NEXT X MILES G20-51 60" X 24"	

R11-3
60" X 30"
ROAD CLOSED
XX MILES AHEAD
LOCAL TRAFFIC ONLY
TYPE III BARRICADE

PROJECT NO:3042-00-73	HWY:STH 60	COUNTY:DODGE	DETOUR SIGNING - STAGE 2	SHEET 44	E

2

GENERAL NOTES FOR TRAFFIC CONTROL

GENERAL NOTES FOR TRAFFIC CONTROL

1) THE EXACT NUMBER, LOCATION, AND SPACING OF ALL SIGNS AND DEVICES SHALL BE ADJUSTED TO FIT FIELD CONDITIONS AS DIRECTED BY THE ENGINEER.

2) A FLAGGER MAY BE REQUIRED WHERE CONSTRUCTION VEHICLES ENTER OR LEAVE WORK AREAS IF WARRANTED BY CONDITIONS OR AS DIRECTED BY THE ENGINEER.

3) ALL SIGNS ARE 48" X 48" UNLESS OTHERWISE NOTED.

4) FOR NIGHTTIME OPERATION, ALL DRUMS IN TAPERS SHALL HAVE A TYPE "C" WARNING LIGHT.

5) ALL TYPE III BARRICADES WITH SIGNS SHALL BE 8' WIDE, UNLESS OTHERWISE NOTED, AND EQUIPPED WITH TWO TYPE "A" (LOW INTENSITY FLASHING) LIGHTS.

6) ALL TEMPORARY PAVEMENT SHALL CONSIST OF 3 INCHES OF ASPHALTIC SURFACE TEMPORARY, ON 9 INCHES OF BASE AGGREGATE DENSE.

7) ALL PAVEMENT MARKINGS ON PERMANENT PAVEMENT SHALL BE REMOVABLE TAPE.

8) EXISTING STOP AHEAD AND STOP SIGNS CAN BE RELOCATED AND USED FOR TRAFFIC CONTROL.

9) ALL TEMPORARY STOP SIGNS SHALL HAVE TWO FLAGS MOUNTED ABOVE THE SIGN.

10) "WO" SIGNS ARE THE SAME AS "W" SIGNS EXCEPT THE BACKGROUND IS REFLECTIVE ORANGE.

11) BARRICADE STRIPES ARE TO BE SLOPED DOWNWARD IN THE DIRECTION OF TRAFFIC FLOW.

12) ALL TRAFFIC CONTROL DRUMS AND TUBULAR MARKERS ARE SPACED AT 50-FEET UNLESS OTHERWISE NOTED.

13) SEE MISCELLANEOUS QUANTITIES FOR STORM SEWER STAGING INFORMATION.

WORK ZONE TRAFFIC CONTROL SYMBOLS

- TRAFFIC CONTROL BARRICADE TYPE III
- TRAFFIC CONTROL BARRICADE TYPE III W/ SIGN
- TRAFFIC CONTROL DRUMS
- TRAFFIC CONTROL DRUMS W/ WARNING LIGHTS TYPE C
- TRAFFIC CONTROL SIGN ON PERMANENT SUPPORT
- TRAFFIC CONTROL SIGN ON TEMPORARY SUPPORT
- TRAFFIC CONTROL FLEXIBLE TUBULAR MARKER POSTS/BASES
- FLAGS, 16" x 16", ORANGE
- DIRECTION OF TRAFFIC
- FLAGGER, EQUIPPED WITH STOP/SLOW PADDLE FASTENED ON SUPPORT STAFF
- REMOVING PAVEMENT MARKING
- XXXXX SAWING ASPHALT

WORK ZONE PAVEMENT MARKINGS

DY	CONTINUOUS DOUBLE YELLOW, 4-INCH	TPM	TEMPORARY PAVEMENT MARKING
W	CONTINUOUS WHITE, 4-INCH	TPMRT	TEMPORARY PAVEMENT MARKING, REMOVABLE TAPE
Y	CONTINUOUS YELLOW, 4-INCH	RPM	REMOVE PAVEMENT MARKING
SB	STOP LINE, 12-INCH		

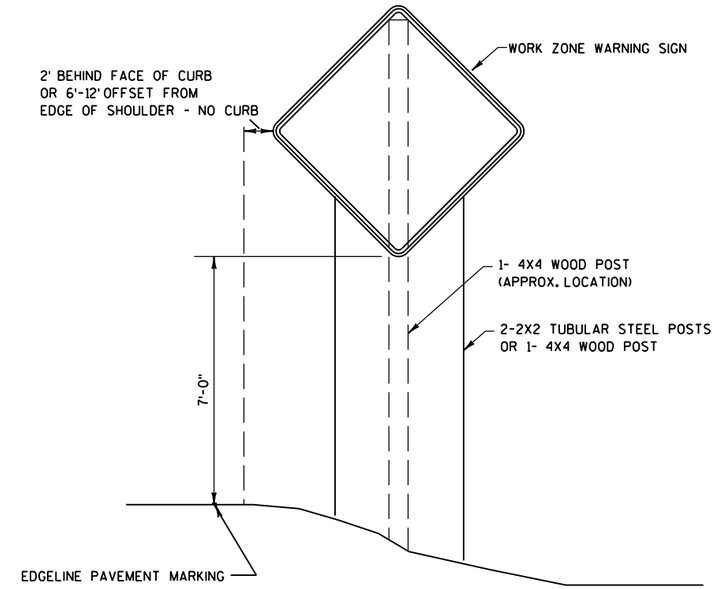

TYPICAL TEMPORARY TRAFFIC CONTROL DETAIL

MOUNTING ON FIXED SUPPORT

LONG TERM
7 DAYS OR MORE

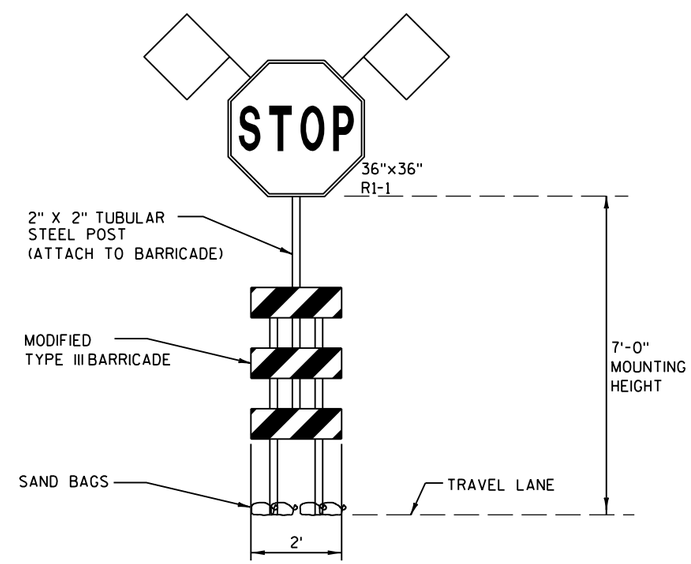

TEMPORARY STOP SIGN

PAID FOR AS:
1-TRAFFIC CONTROL BARRICADES TYPE III
1-TRAFFIC CONTROL SIGNS

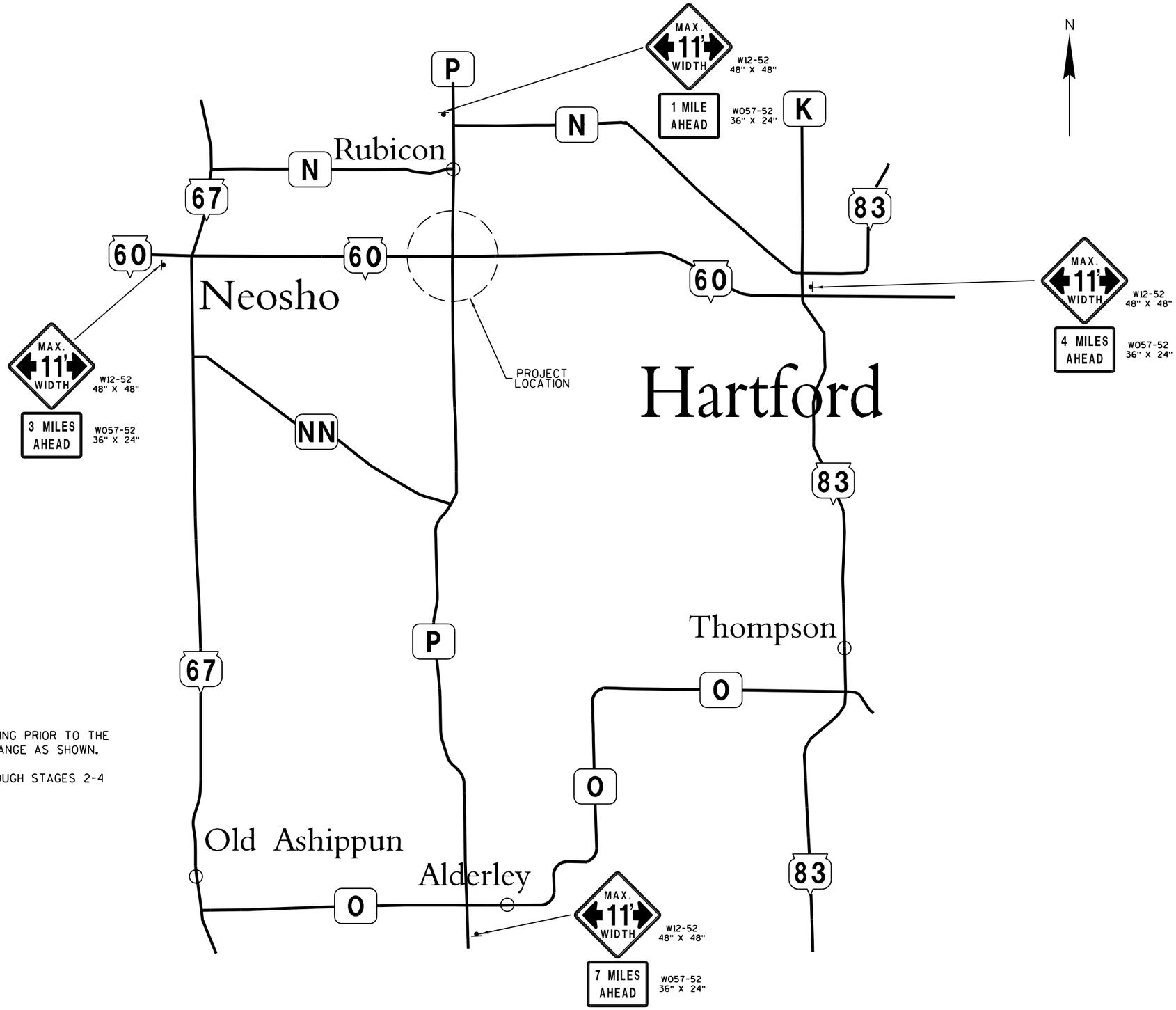

NOTES:

PLACE ADVANCED SIGNING PRIOR TO THE INTERSECTION/INTERCHANGE AS SHOWN.

MAINTAIN SIGNING THROUGH STAGES 2-4 OF CONSTRUCTION.

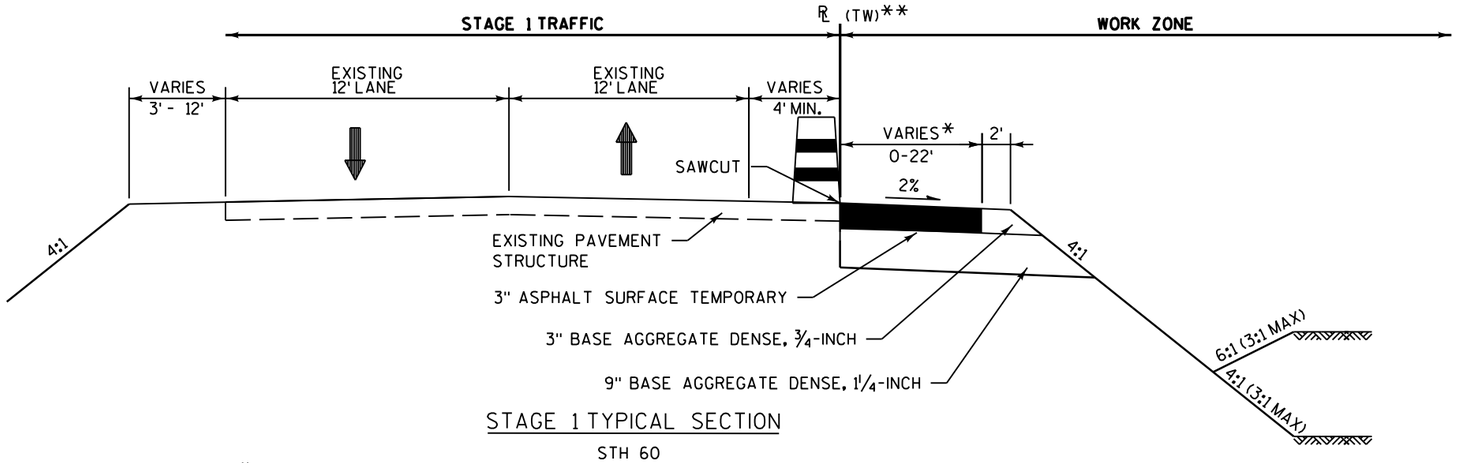

STAGE 1 TYPICAL SECTION

STH 60

*(SEE CROSS SECTIONS - TEMPORARY ASPHALT WIDTHS SHOWN ON TW1 CROSS SECTIONS)

**SEE STAGE 1-TW1 TEMPORARY WIDENING ALIGNMENT DATA

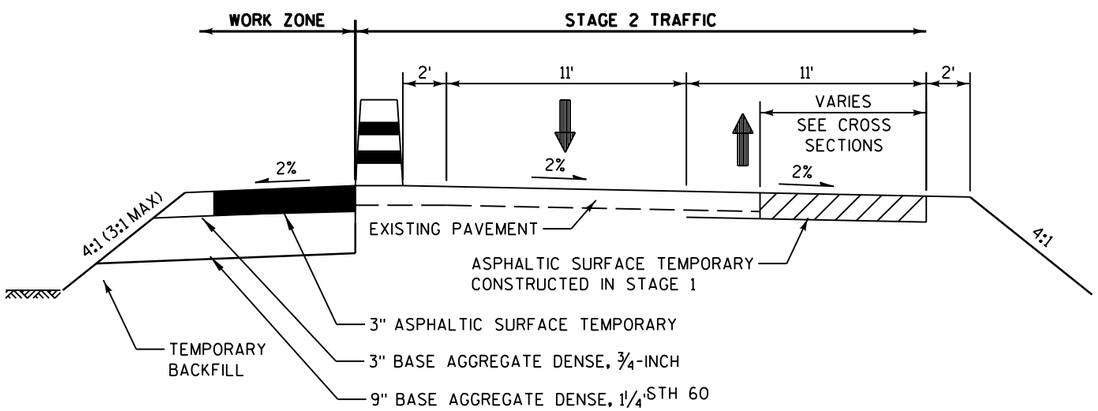

STH 60

STAGE 2 TYPICAL SECTION

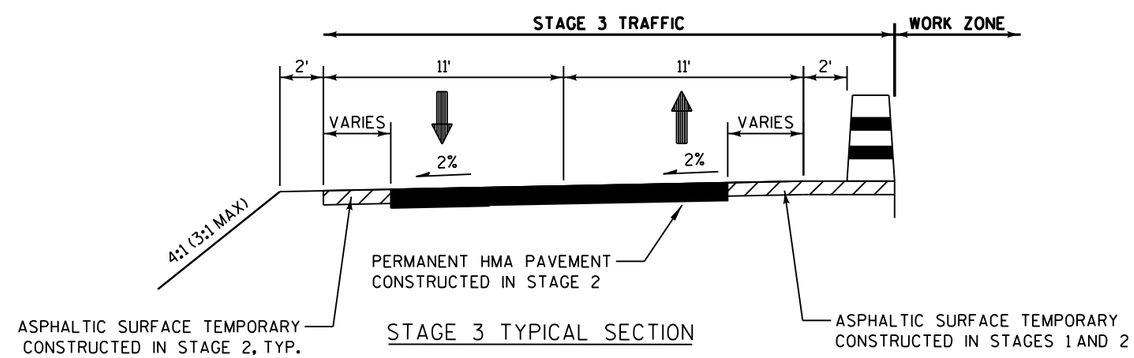

STAGE 3 TYPICAL SECTION

STH 60

2

STAGE 1 CONSTRUCTION:

STH 60: CONSTRUCT CTH P INTERSECTION SOUTH OF EXISTING LANES. CONSTRUCT TEMPORARY WIDENING ON SOUTH SIDE OF ROAD.

CTH P: CONSTRUCT SOUTH OF STH 60.

STAGE 1 TRAFFIC:

STH 60: MAINTAIN EXISTING TRAFFIC, WITH CLOSED SHOULDERS ADJACENT TO WORK ZONES. CLOSE ACCESS TO SOUTH CTH P.

CTH P: CLOSE CTH P TO THROUGH TRAFFIC SOUTH OF STH 60. UTILIZE SIGNED DETOUR.

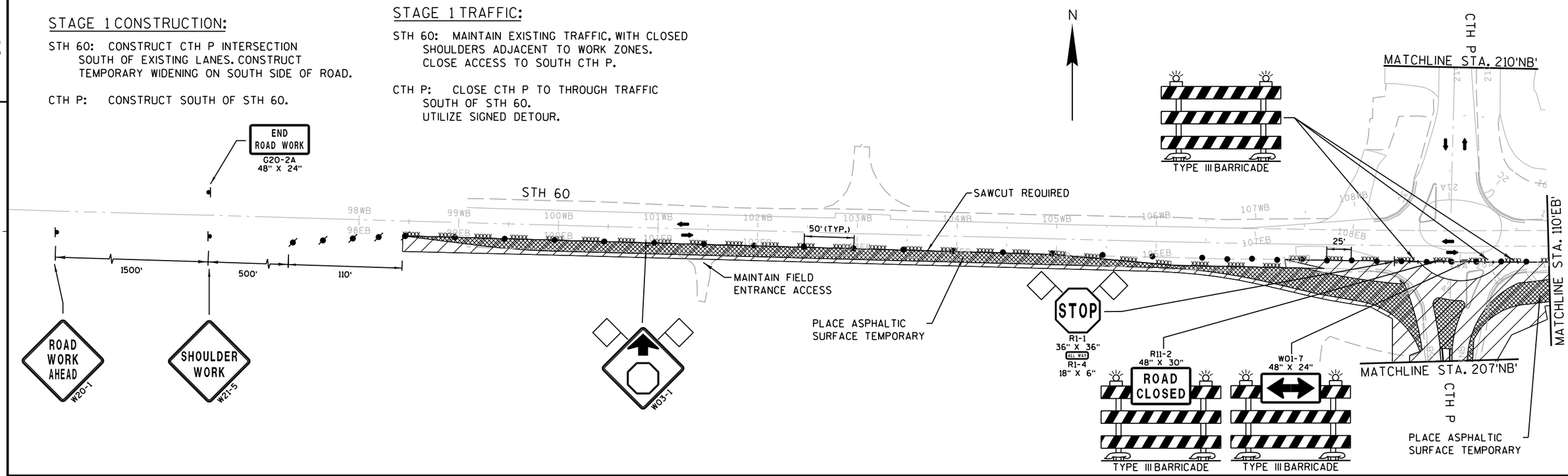

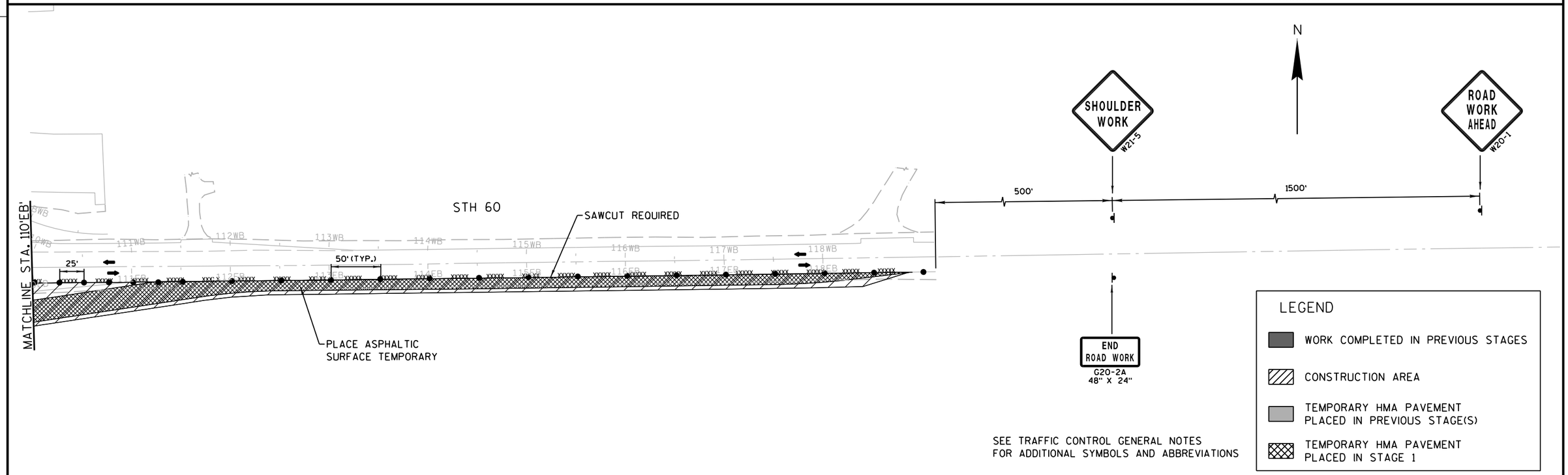

SEE TRAFFIC CONTROL GENERAL NOTES FOR ADDITIONAL SYMBOLS AND ABBREVIATIONS

PROJECT NO:3042-00-73	HWY:STH 60	COUNTY:DODGE	TRAFFIC CONTROL - STAGE 1	SHEET 48	E

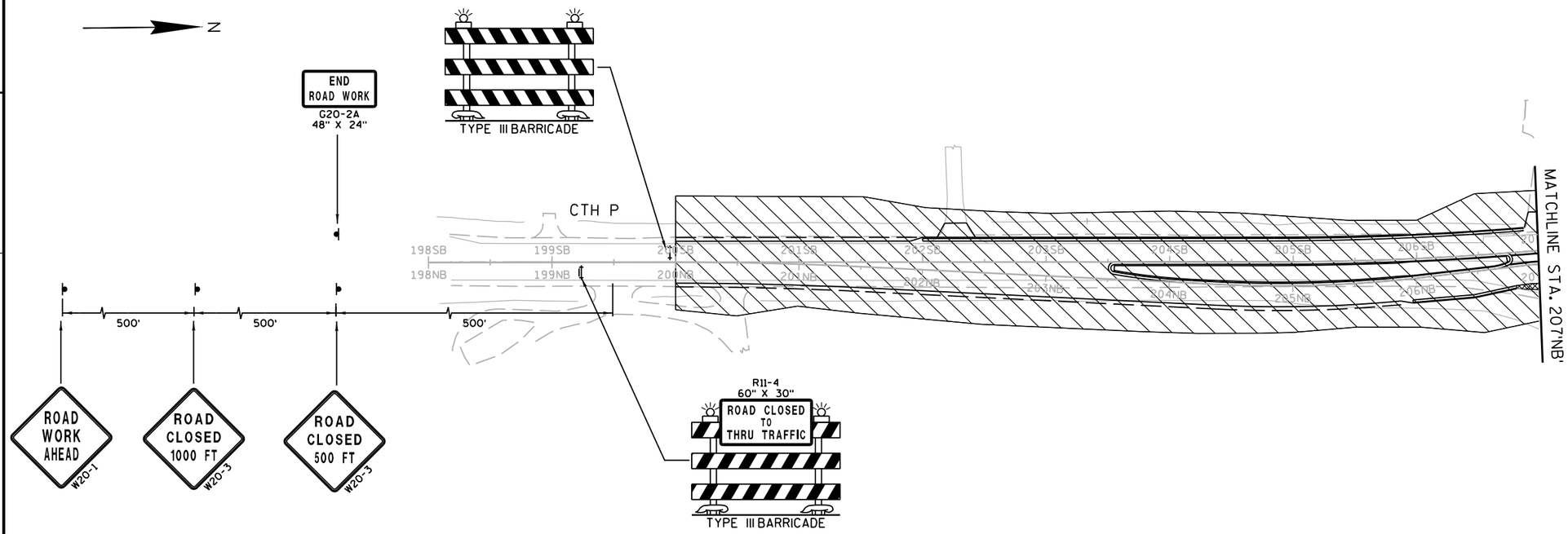

STAGE 1 CONSTRUCTION:

STH 60: CONSTRUCT CTH P INTERSECTION SOUTH OF EXISTING LANES. CONSTRUCT TEMPORARY WIDENING ON SOUTH SIDE OF ROAD

CTH P: CONSTRUCT SOUTH OF STH 60.

STAGE 1 TRAFFIC:

STH 60: MAINTAIN EXISTING TRAFFIC, WITH CLOSED SHOULDERS ADJACENT TO WORK ZONES. CLOSE ACCESS TO SOUTH CTH P.

CTH P: CLOSE CTH P TO THROUGH TRAFFIC SOUTH OF STH 60. UTILIZE SIGNED DETOUR.

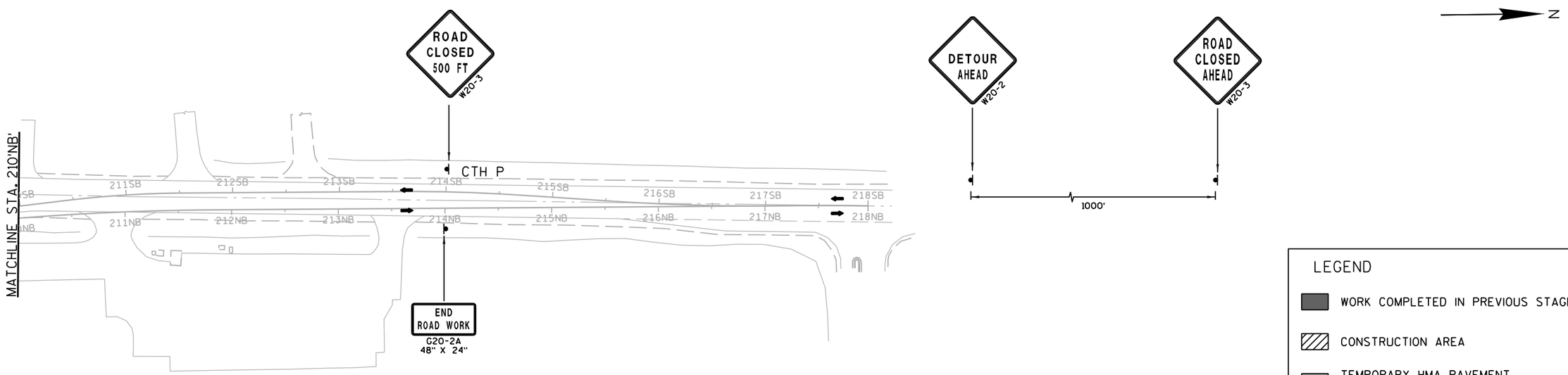

SEE TRAFFIC CONTROL GENERAL NOTES FOR ADDITIONAL SYMBOLS AND ABBREVIATIONS

LEGEND

- WORK COMPLETED IN PREVIOUS STAGES
- CONSTRUCTION AREA
- TEMPORARY HMA PAVEMENT PLACED IN PREVIOUS STAGE(S)
- TEMPORARY HMA PAVEMENT PLACED IN STAGE 1

PROJECT NO:3042-00-73	HWY:STH 60	COUNTY:DODGE	TRAFFIC CONTROL - STAGE 1	SHEET 49	E

STAGE 2 CONSTRUCTION:

STH 60: CONSTRUCT NORTH (WESTBOUND) HALF OF STH 60, CIRCULATORY ROADWAY, AND TEMPORARY SHOULER WIDENINGS. WITHHOLD THE FINAL LIFT (UPPER LAYER) OF HMA PAVEMENT. PLACE TEMPORARY PAVEMENT IN SPLITTER ISLANDS FOR TRAFFIC CROSSOVERS IN STAGE 3.

CTH P: CONSTRUCT NORTH OF STH 60.

STAGE 2 TRAFFIC:

STH 60: SHIFT TRAFFIC TO SOUTH, UTILIZING TEMPORARY WIDENING CONSTRUCTED IN STAGE 1.

CTH P: CLOSE CTH P TO THROUGH TRAFFIC NORTH OF STH 60. UTILIZE SIGNED DETOUR. OPEN SOUTH LEG OF CTH P INTERSECTION.

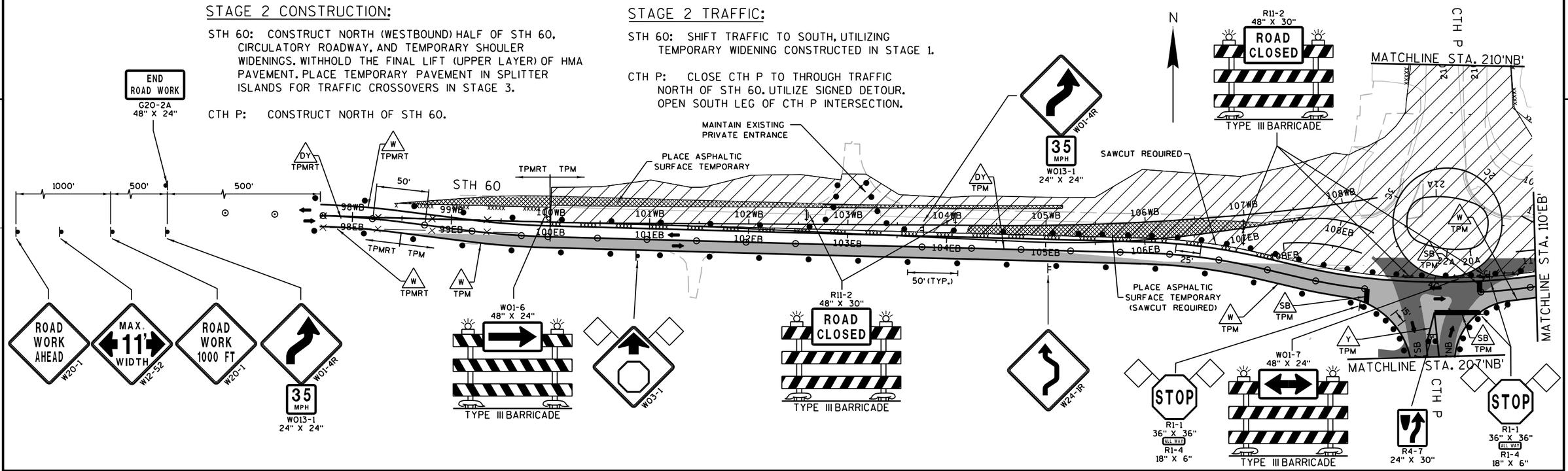

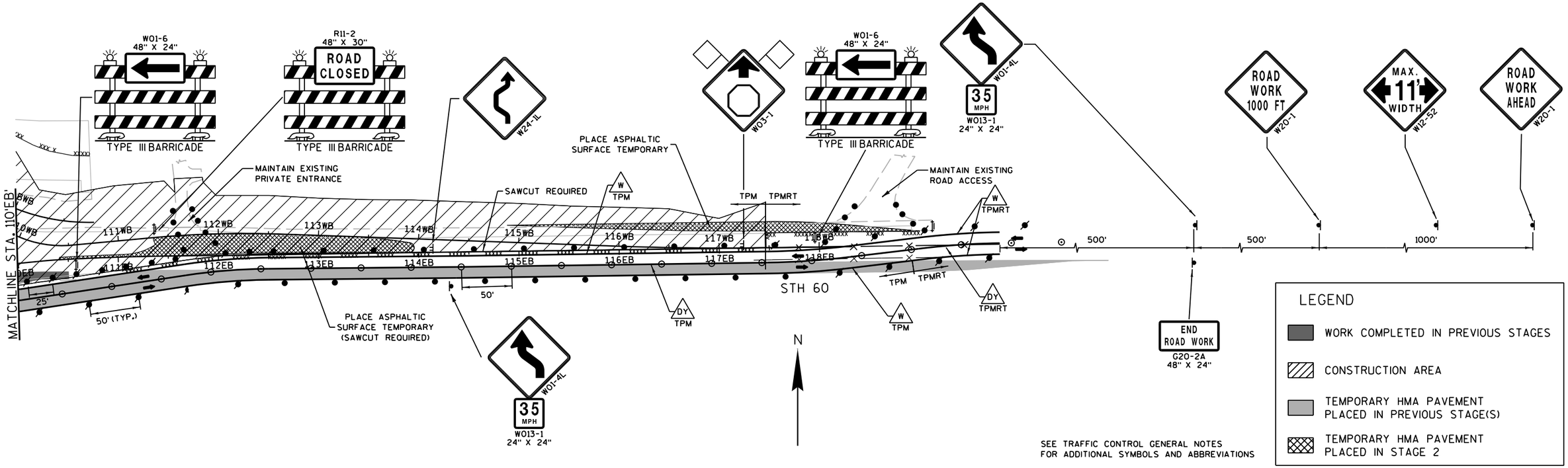

SEE TRAFFIC CONTROL GENERAL NOTES FOR ADDITIONAL SYMBOLS AND ABBREVIATIONS

PROJECT NO:3042-00-73	HWY:STH 60	COUNTY:DODGE	TRAFFIC CONTROL - STAGE 2	SHEET 50	E

2

STAGE 2 CONSTRUCTION:

STH 60: CONSTRUCT NORTH (WESTBOUND) HALF OF STH 60, CIRCULATORY ROADWAY, AND TEMPORARY SHOULER WIDENINGS. WITHHOLD THE FINAL LIFT (UPPER LAYER) OF HMA PAVEMENT. PLACE TEMPORARY PAVEMENT IN SPLITTER ISLANDS FOR TRAFFIC CROSSOVERS IN STAGE 3.

CTH P: CONSTRUCT NORTH OF STH 60.

UTLIZE PERMANENT SIGNS AND PAVEMENT MARKINGS UNLESS OTHERWISE NOTED

STAGE 2 TRAFFIC:

STH 60: SHIFT TRAFFIC TO SOUTH, UTILIZING TEMPORARY WIDENING CONSTRUCTED IN STAGE 1.

CTH P: CLOSE CTH P TO THROUGH TRAFFIC NORTH OF STH 60. UTILIZE SIGNED DETOUR. OPEN SOUTH LEG OF CTH P INTERSECTION.

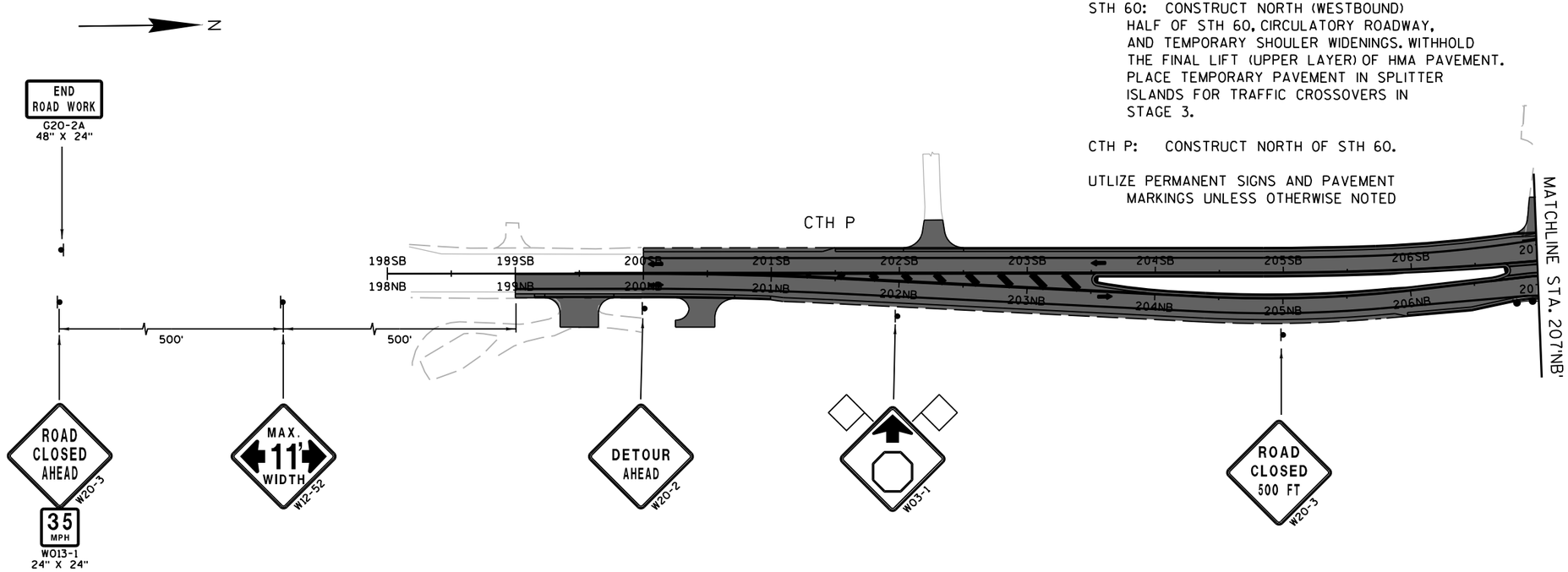

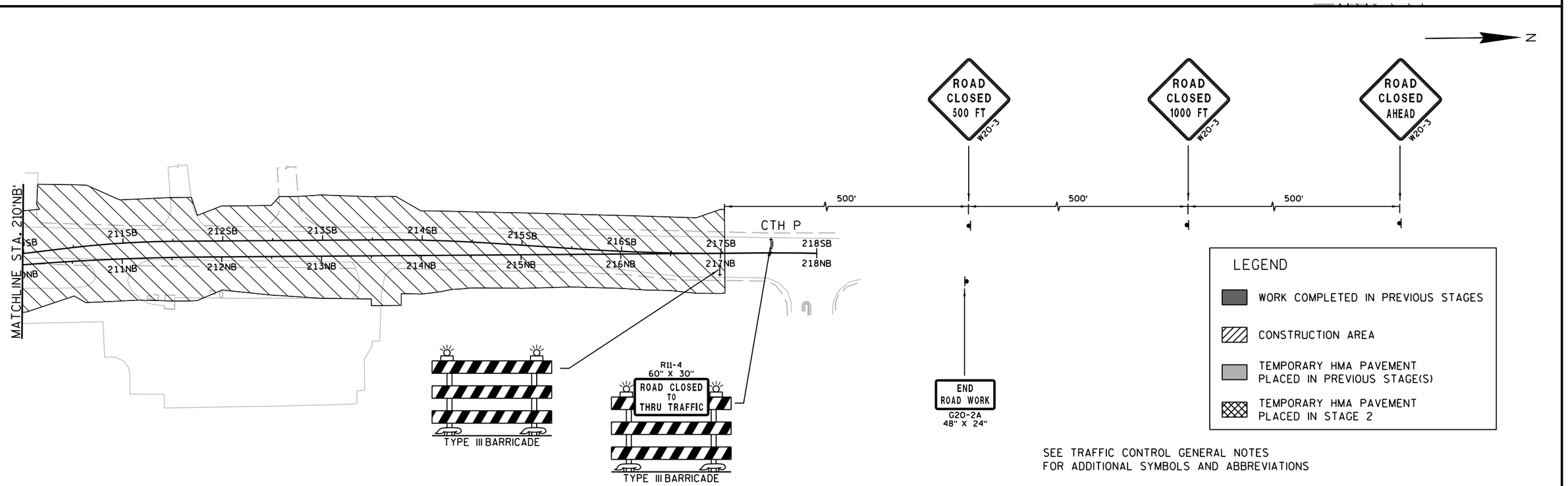

SEE TRAFFIC CONTROL GENERAL NOTES FOR ADDITIONAL SYMBOLS AND ABBREVIATIONS

PROJECT NO:3042-00-73	HWY:STH 60	COUNTY:DODGE	TRAFFIC CONTROL - STAGE 2	SHEET 51	E

STAGE 3 CONSTRUCTION:

STH 60: CONSTRUCT SOUTH (EASTBOUND) HALF OF STH 60, WITHHOLDING THE FINAL LIFT (UPPER LAYER) OF HMA PAVEMENT.

CTH P: NONE

UTILIZE PERMANENT SIGNS AND MARKINGS UNLESS OTHERWISE NOTED

STAGE 3 TRAFFIC:

STH 60: SHIFT TRAFFIC TO NORTH, UTILIZING FINISHED ROADWAY AND TEMPORARY WIDENING. OPEN ROUNDABOUT TO TRAFFIC.

CTH P: OPEN CTH P THROUGHOUT.

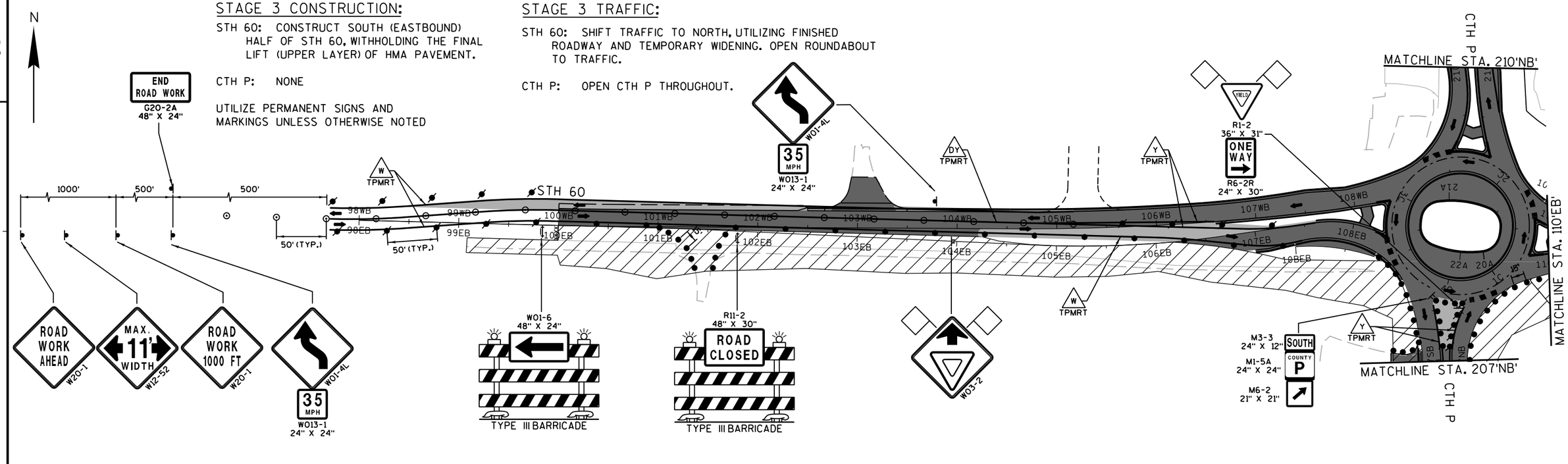

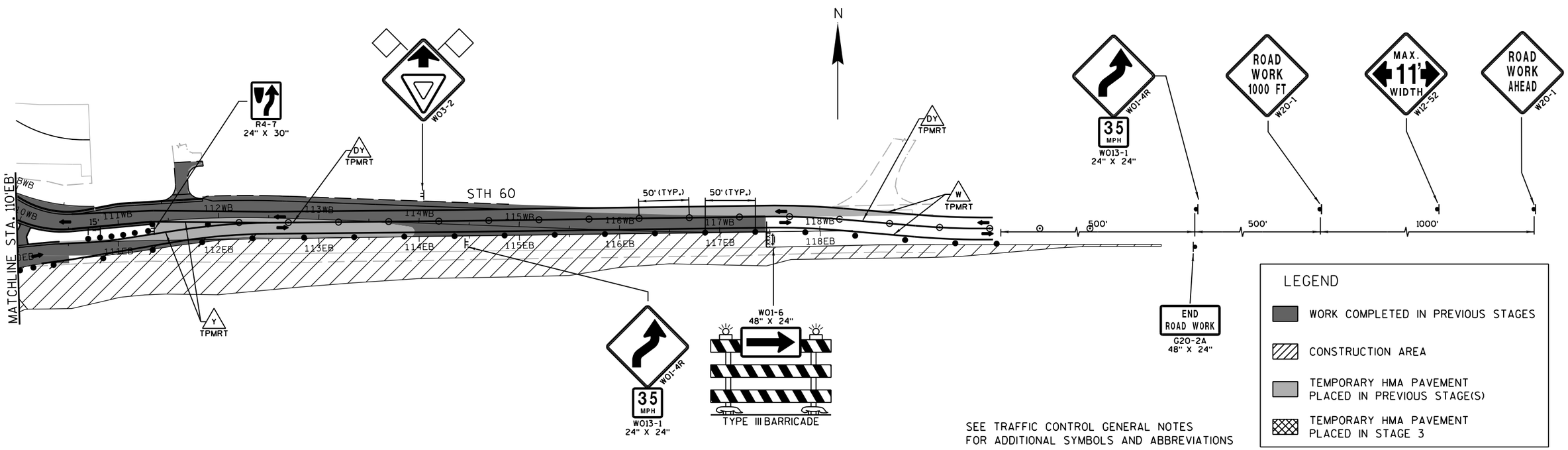

SEE TRAFFIC CONTROL GENERAL NOTES FOR ADDITIONAL SYMBOLS AND ABBREVIATIONS

PROJECT NO:3042-00-73	HWY:STH 60	COUNTY:DODGE	TRAFFIC CONTROL - STAGE 3	SHEET 52	E

2

STAGE 3 CONSTRUCTION:

STH 60: CONSTRUCT SOUTH (EASTBOUND) HALF OF STH 60, WITHHOLDING THE FINAL LIFT (UPPER LAYER) OF HMA PAVEMENT.

CTH P: NONE

UTILIZE PERMANENT SIGNS AND MARKING UNLESS OTHERWISE NOTED

STAGE 3 TRAFFIC:

STH 60: SHIFT TRAFFIC TO NORTH, UTILIZING FINISHED ROADWAY AND TEMPORARY WIDENING. OPEN ROUNDABOUT TO TRAFFIC.

CTH P: OPEN CTH P THROUGHOUT.

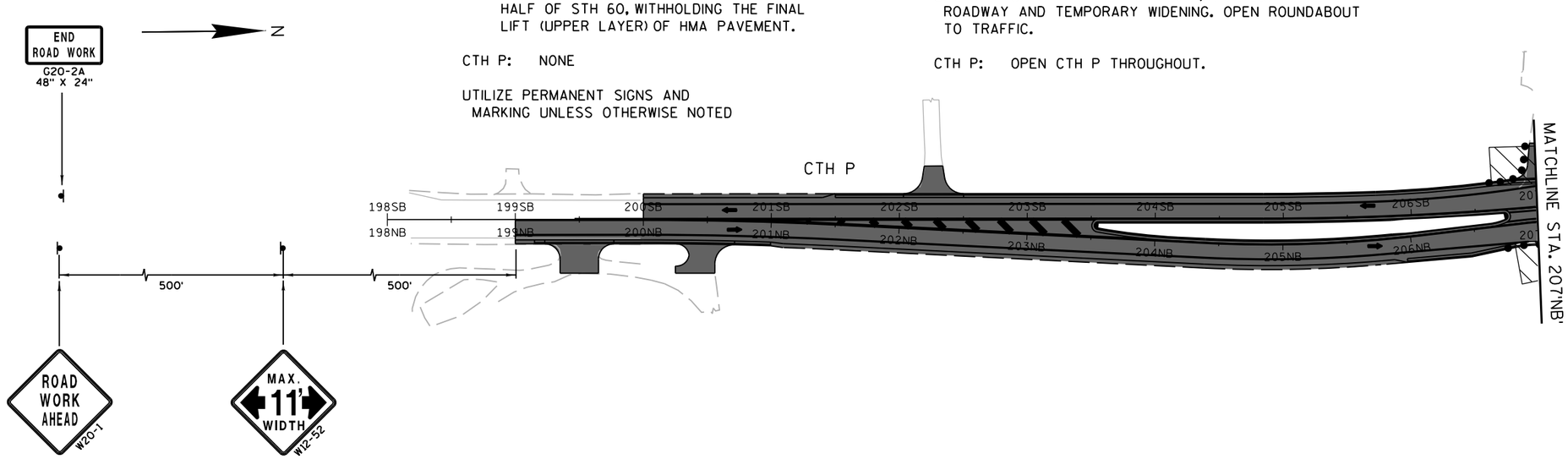

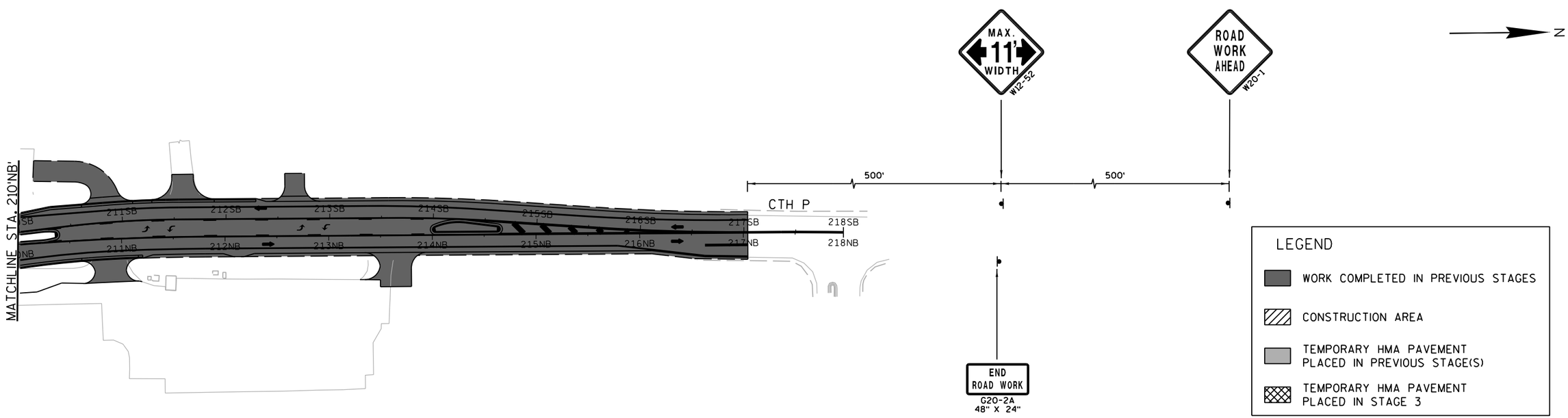

LEGEND

- WORK COMPLETED IN PREVIOUS STAGES
- CONSTRUCTION AREA
- TEMPORARY HMA PAVEMENT PLACED IN PREVIOUS STAGE(S)
- TEMPORARY HMA PAVEMENT PLACED IN STAGE 3

SEE TRAFFIC CONTROL GENERAL NOTES FOR ADDITIONAL SYMBOLS AND ABBREVIATIONS

PROJECT NO:3042-00-73	HWY:STH 60	COUNTY:DODGE	TRAFFIC CONTROL - STAGE 3	SHEET 53	E

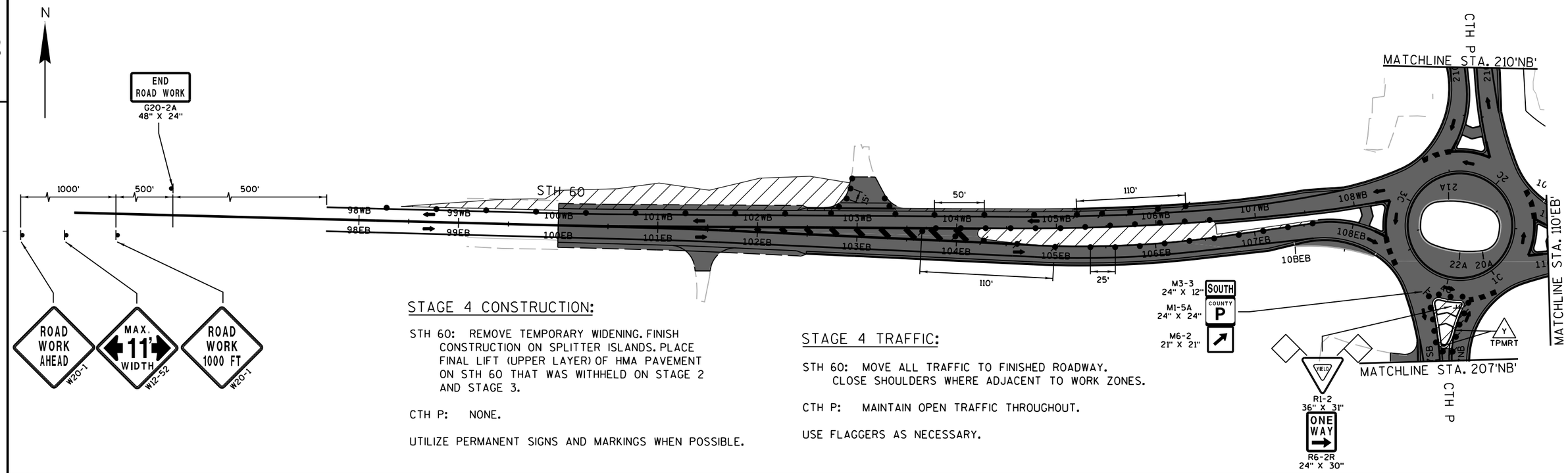

STAGE 4 CONSTRUCTION:

STH 60: REMOVE TEMPORARY WIDENING. FINISH CONSTRUCTION ON SPLITTER ISLANDS. PLACE FINAL LIFT (UPPER LAYER) OF HMA PAVEMENT ON STH 60 THAT WAS WITHHELD ON STAGE 2 AND STAGE 3.

CTH P: NONE.

UTILIZE PERMANENT SIGNS AND MARKINGS WHEN POSSIBLE.

STAGE 4 TRAFFIC:

STH 60: MOVE ALL TRAFFIC TO FINISHED ROADWAY. CLOSE SHOULDERS WHERE ADJACENT TO WORK ZONES.

CTH P: MAINTAIN OPEN TRAFFIC THROUGHOUT.

USE FLAGGERS AS NECESSARY.

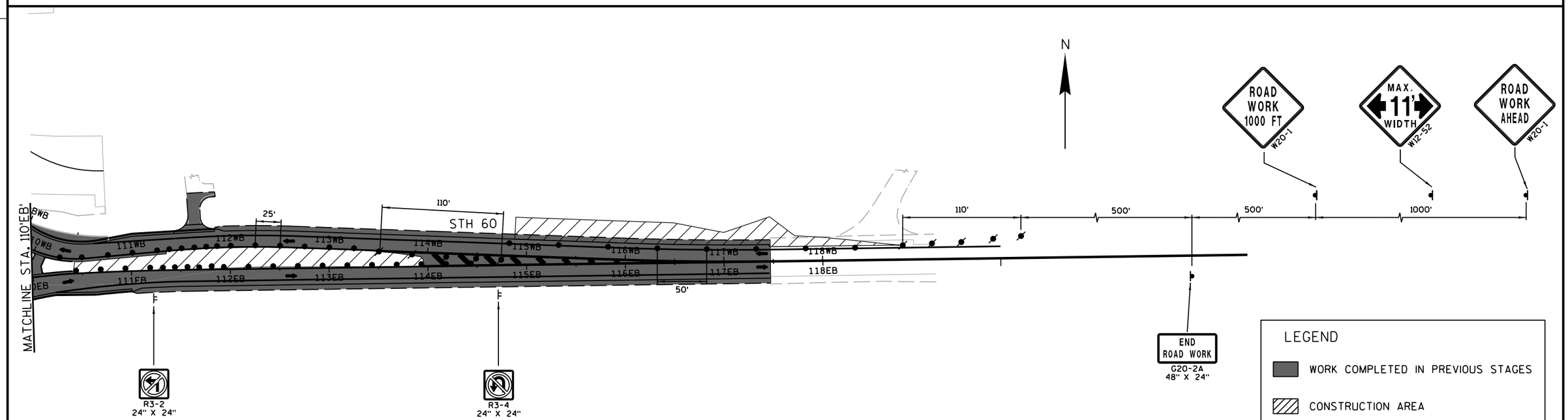

SEE TRAFFIC CONTROL GENERAL NOTES FOR ADDITIONAL SYMBOLS AND ABBREVIATIONS

LEGEND

- WORK COMPLETED IN PREVIOUS STAGES
- CONSTRUCTION AREA
- TEMPORARY HMA PAVEMENT PLACED IN PREVIOUS STAGE(S)

PROJECT NO: 3042-00-73	HWY: STH 60	COUNTY: DODGE	TRAFFIC CONTROL - STAGE 4	SHEET 54	E

2

STAGE 4 CONSTRUCTION:

STH 60: REMOVE TEMPORARY WIDENING. FINISH CONSTRUCTION ON SPLITTER ISLANDS. PLACE FINAL LIFT (UPPER LAYER) OF HMA PAVEMENT ON STH 60 THAT WAS WITHHELD ON STAGE 2 AND STAGE 3.

CTH P: NONE.

UTILIZE PERMINANT SIGNS AND MARKINGS UNLESS OTHERWISE NOTED.

STAGE 4 TRAFFIC:

STH 60: MOVE ALL TRAFFIC TO FINISHED ROADWAY. CLOSE SHOULDERS WHERE ADJACENT TO WORK ZONES

CTH P: MAINTAIN OPEN TRAFFIC THROUGHOUT.

USE FLAGGERS AS NECESSARY.

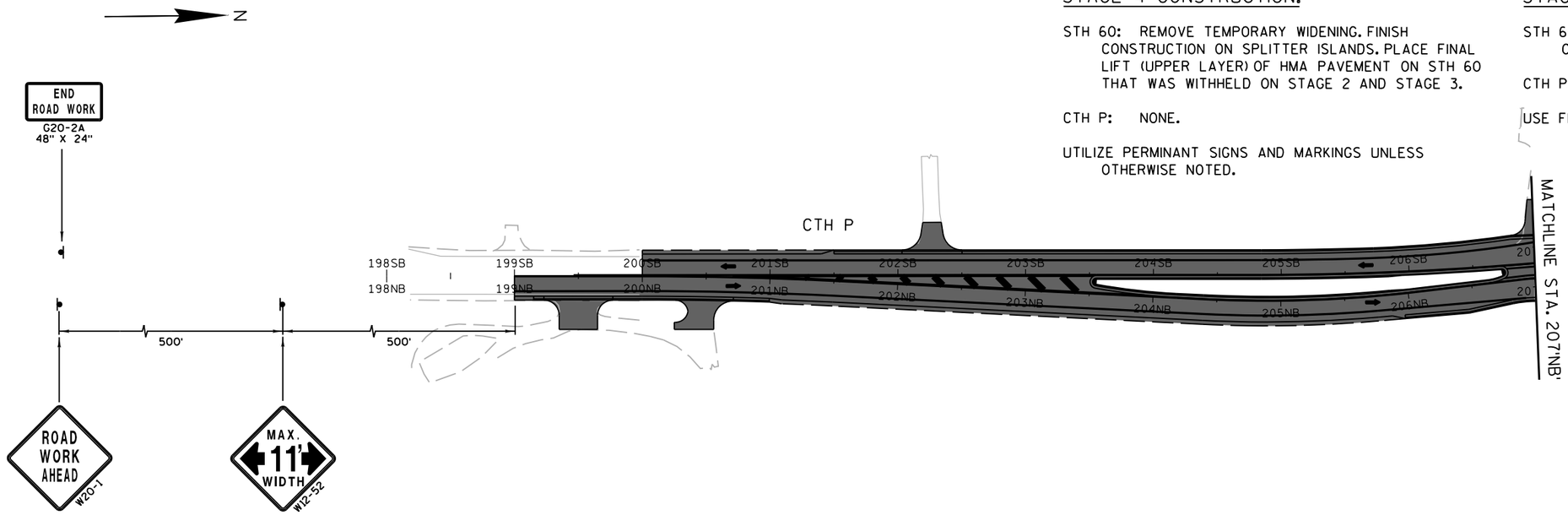

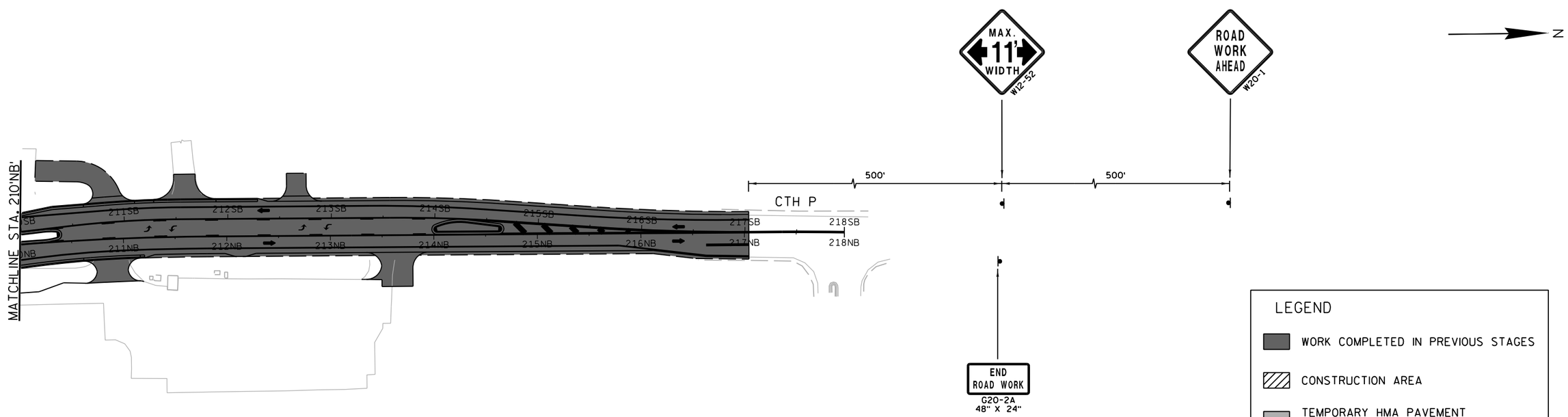

SEE TRAFFIC CONTROL GENERAL NOTES FOR ADDITIONAL SYMBOLS AND ABBREVIATIONS

LEGEND

- WORK COMPLETED IN PREVIOUS STAGES
- CONSTRUCTION AREA
- TEMPORARY HMA PAVEMENT PLACED IN PREVIOUS STAGE(S)

PROJECT NO:3042-00-73	HWY:STH 60	COUNTY:DODGE	TRAFFIC CONTROL - STAGE 4	SHEET 55	E

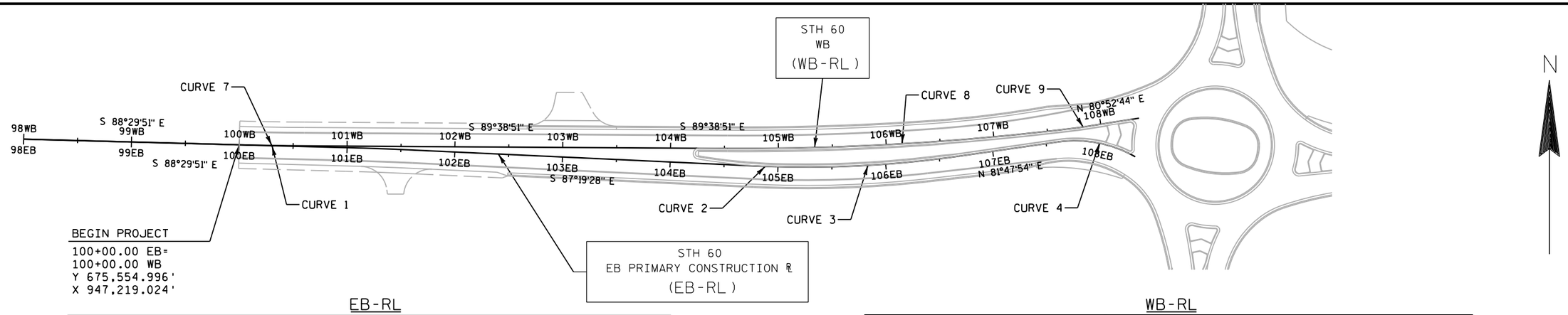

EB-RL

CURVE NUMBER	POINT	STATION	NORTHING (ft)	EASTING (ft)	RADIUS (ft)	DEGREE OF CURVATURE	DELTA	LENGTH (ft)	TANGENT (ft)
	POB	98+00.00 EB	675,560.24	947,019.09					
1	PI	101+30.34 EB	675,551.58	947,349.32	3000	1°54'35.49"	1°10'22.99" RT	61.42	30.71
	PC	100+99.63 EB	675,552.38	947,318.62					
	PT	101+61.05 EB	675,550.14	947,380.00					
2	PI	104+88.16 EB	675,534.88	947,706.75	1002	5°43'05.31"	1°05'14.18" LT	19.01	9.51
	PC	104+78.65 EB	675,535.32	947,697.25					
	PCC	104+97.66 EB	675,534.61	947,716.25					
3	PI	105+83.48 EB	675,532.23	947,802.03	1002	5°43'05.31"	9°47'23.81" LT	171.21	85.81
	PCC	104+97.66 EB	675,534.61	947,716.25					
	PT	106+68.87 EB	675,544.48	947,886.97					
4	PI	107+99.92 EB	675,563.17	948,016.68	110	52°05'13.46"	38°29'49.89" RT	73.91	38.41
	PC	107+61.51 EB	675,557.69	947,978.66					
	PT	108+35.42 EB	675,543.79	948,049.84					
	PI	108+35.42 EB	675,543.79	948,049.84			22°50'19.32" LT		
	PI	109+79.79 EB	675,525.06	948,192.99			13°03'21.3" LT		
5	PI	110+33.03 EB	675,530.25	948,245.98	398	14°23'45.33"	2°24'55.19" RT	16.78	8.39
	PC	110+24.64 EB	675,529.43	948,237.63					
	PCC	110+41.42 EB	675,530.72	948,254.36					
6	PI	110+93.91 EB	675,533.63	948,306.76	2519	2°16'28.36"	2°23'14.38" RT	104.96	52.49
	PCC	110+41.42 EB	675,530.72	948,254.36					
	PT	111+46.38 EB	675,534.36	948,359.24					
	POE	118+32.53 EB	675,543.90	949,045.33					

WB-RL

CURVE NUMBER	POINT	STATION	NORTHING (ft)	EASTING (ft)	RADIUS (ft)	DEGREE OF CURVATURE	DELTA	LENGTH (ft)	TANGENT (ft)
	POB	98+00.00 WB	675,560.24	947,019.09					
7	PI	100+30.11 WB	675,554.21	947,249.12	3000	1°54'35.49"	1°09'00.00" LT	60.21	30.11
	PC	100+00.00 WB	675,555.00	947,219.02					
	PT	100+60.21 WB	675,554.02	947,279.23					
8	PI	106+14.70 WB	675,550.61	947,833.70	2500	2°17'30.59"	7°24'53.83" LT	323.54	162
	PC	104+52.70 WB	675,551.61	947,671.71					
	PCC	107+76.24 WB	675,570.53	947,994.47					
9	PI	107+83.39 WB	675,571.41	948,001.57	398	14°23'45.33"	2°03'31.10" LT	14.3	7.15
	PCC	107+76.24 WB	675,570.53	947,994.47					
	PT	107+90.54 WB	675,572.54	948,008.63					
	PI	108+35.87 WB	675,579.73	948,053.39			16°18'37.3" RT		
	PI	109+82.39 WB	675,561.39	948,198.75			24°39'43.56" RT		
10	PI	110+19.32 WB	675,541.90	948,230.12	110	52°05'13.46"	37°07'05.53" LT	71.26	36.93
	PC	109+82.39 WB	675,561.39	948,198.75					
	PT	110+53.65 WB	675,545.29	948,266.90					
11	PI	111+99.26 WB	675,558.66	948,411.89	1002	5°43'05.31"	7°19'49.43" RT	128.2	64.19
	PC	111+35.08 WB	675,552.77	948,347.98					
	PT	112+63.27 WB	675,556.35	948,476.04					
12	PI	116+71.27 WB	675,541.66	948,883.77	3000	1°54'35.49"	2°51'36.00" LT	149.75	74.89
	PC	115+96.38 WB	675,544.35	948,808.93					
	PT	117+46.13 WB	675,542.70	948,958.65					
	POE	118+32.81 WB	675,543.90	949,045.33					

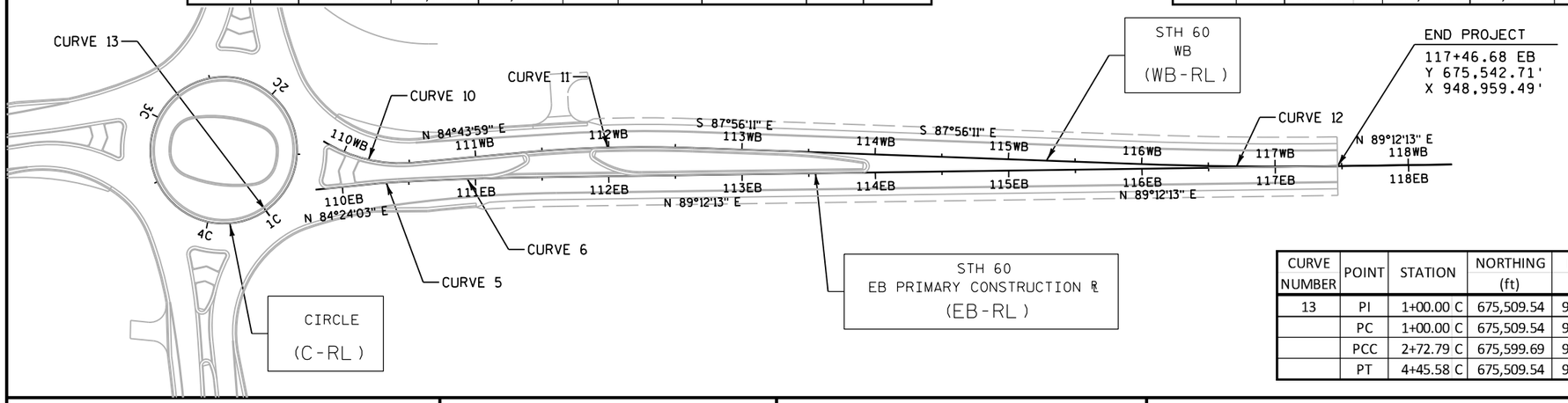

C-RL

CURVE NUMBER	POINT	STATION	NORTHING (ft)	EASTING (ft)	RADIUS (ft)	DEGREE OF CURVATURE	DELTA	LENGTH (ft)	TANGENT (ft)
13	PI	1+00.00 C	675,509.54	948,155.57	55	104°10'26.92"	180°00'00.00" LT	172.79	0
	PC	1+00.00 C	675,509.54	948,155.57					
	PCC	2+72.79 C	675,599.69	948,092.54					
	PT	4+45.58 C	675,509.54	948,155.57					

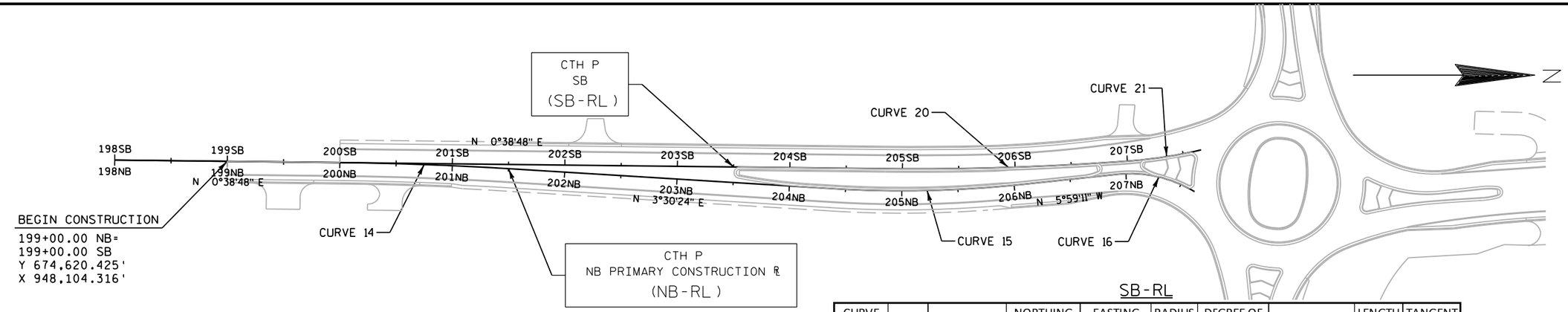

NB-RL

CURVE NUMBER	POINT	STATION	NORTHING (ft)	EASTING (ft)	RADIUS (ft)	DEGREE OF CURVATURE	DELTA	LENGTH (ft)	TANGENT (ft)
	POB	198+00.00 NB	674,520.43	948,103.19					
14	PI	200+74.89 NB	674,795.30	948,106.29	3000	1°54'35.49"	2°51'36.00" RT	149.75	74.89
	PC	200+00.00 NB	674,720.42	948,105.44					
	PT	201+49.75 NB	674,870.05	948,110.87					
15	PI	205+22.50 NB	675,242.11	948,133.67	1002	5°43'05.31"	9°29'34.95" LT	166.02	83.2
	PC	204+39.30 NB	675,159.07	948,128.58					
	PT	206+05.32 NB	675,324.86	948,124.99					
16	PI	207+29.42 NB	675,448.27	948,112.05	110	52°05'13.46"	37°15'04.07" RT	71.52	37.07
	PC	206+92.34 NB	675,411.40	948,115.92					
	PT	207+63.86 NB	675,479.96	948,131.29					
	PI	207+63.86 NB	675,479.96	948,131.29			22°24'47.52" LT		
	PI	209+09.15 NB	675,623.53	948,153.65			23°30'54.00" LT		
17	PI	209+45.19 NB	675,658.39	948,144.53	398	14°23'45.33"	10°20'51.29" RT	71.88	36.04
	PC	209+09.15 NB	675,623.53	948,153.65					
	PCC	209+81.03 NB	675,694.33	948,141.81					
18	PI	210+81.07 NB	675,794.09	948,134.29	2498	2°17'37.20"	4°35'12.54" RT	199.98	100.04
	PCC	209+81.03 NB	675,694.33	948,141.81					
	PT	211+81.01 NB	675,894.13	948,134.76					
19	PI	217+66.51 NB	676,479.62	948,137.53	3000	1°54'35.49"	1°09'00.00" RT	60.21	30.11
	PC	217+36.40 NB	676,449.51	948,137.38					
	PT	217+96.62 NB	676,509.72	948,138.27					
	POE	217+96.62 NB	676,509.72	948,138.27					

SB-RL

CURVE NUMBER	POINT	STATION	NORTHING (ft)	EASTING (ft)	RADIUS (ft)	DEGREE OF CURVATURE	DELTA	LENGTH (ft)	TANGENT (ft)
	POB	198+00.00 SB	674,520.43	948,103.19					
20	PI	205+94.16 SB	675,314.54	948,112.15	2519	2°16'28.4"	4°59'02.8" LT	219.13	109.63
	PC	204+84.53 SB	675,204.92	948,110.91					
	PCC	207+03.66 SB	675,423.86	948,103.86					
21	PI	207+35.10 SB	675,455.22	948,101.48	398	14°23'45.3"	9°02'05.1" LT	62.76	31.44
	PCC	207+03.66 SB	675,423.86	948,103.86					
	PT	207+66.41 SB	675,485.81	948,094.21					
	PI	207+66.41 SB	675,485.81	948,094.21			21°45'48.24" RT		
	PI	209+11.26 SB	675,629.11	948,115.35			22°57'50.76" RT		
22	PI	209+48.65 SB	675,661.03	948,134.80	110	52°05'13.5"	37°32'48.4" LT	72.08	37.39
	PC	209+11.26 SB	675,629.11	948,115.35					
	PT	209+83.35 SB	675,698.21	948,130.77					
23	PI	210+98.28 SB	675,812.47	948,118.37	1000	5°43'46.5"	6°27'44.8" RT	112.79	56.46
	PC	210+41.83 SB	675,756.35	948,124.46					
	PT	211+54.62 SB	675,868.93	948,118.64					
24	PI	214+11.48 SB	676,125.78	948,119.85	1500	3°49'11.0"	4°11'06.8" RT	109.57	54.81
	PC	213+56.67 SB	676,070.97	948,119.59					
	PT	214+66.24 SB	676,180.42	948,124.11					
25	PI	216+30.66 SB	676,344.35	948,136.89	2000	2°51'53.2"	4°11'06.8" LT	146.09	73.08
	PC	215+57.58 SB	676,271.50	948,131.21					
	PT	217+03.68 SB	676,417.43	948,137.23					
26	PI	217+65.87 SB	676,479.62	948,137.53	3000	1°54'35.5"	1°09'00.0" RT	60.21	30.11
	PC	217+35.76 SB	676,449.51	948,137.38					
	PT	217+95.97 SB	676,509.72	948,138.27					
	POB	217+95.97 SB	676,509.72	948,138.27					

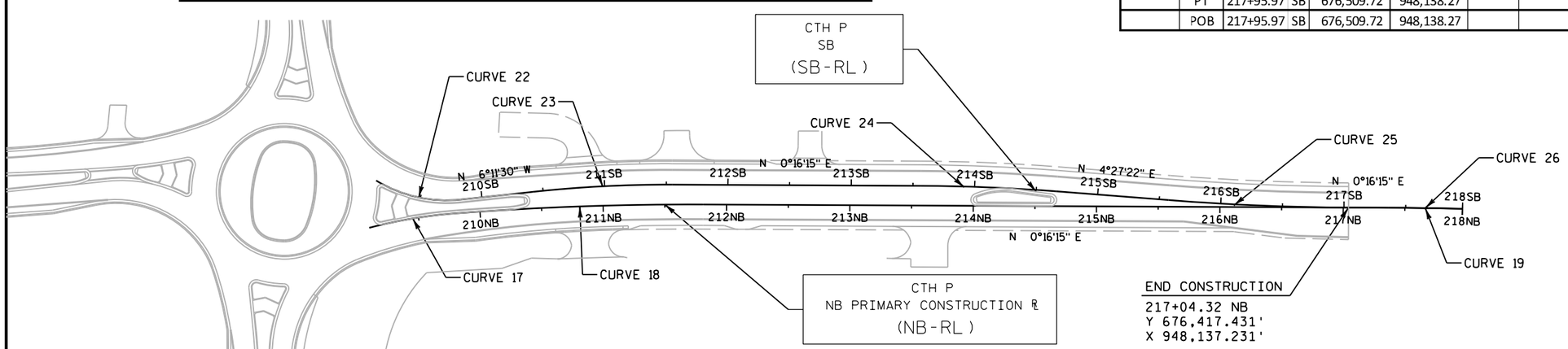

2

NW-RL

CURVE NUMBER	POINT	STATION	NORTHING (ft)	EASTING (ft)	RADIUS (ft)	DEGREE OF CURVATURE	DELTA	LENGTH (ft)	TANGENT (ft)
	POB	300+00.00 NW	675,590.62	948,008.00					
27	PI	300+30.58 NW	675,597.13	948,037.88	302	18°58'19.6"	11°33'48.1" LT	60.95	30.58
	PC	300+00.00 NW	675,590.62	948,008.00					
	PCC	300+60.95 NW	675,609.49	948,065.85					
28	PI	300+75.15 NW	675,615.23	948,078.84	72	79°34'38.9"	22°19'11.3" LT	28.05	14.2
	PCC	300+60.95 NW	675,609.49	948,065.85					
	PCC	300+89.00 NW	675,625.47	948,088.68					
29	PI	301+39.32 NW	675,661.77	948,123.54	97	59°04'04.1"	54°50'38.9" LT	92.85	50.33
	PCC	300+89.00 NW	675,625.47	948,088.68					
	PT	301+81.85 NW	675,711.17	948,113.93					
	POE	301+81.85 NW	675,711.17	948,113.93					

NE-RL

CURVE NUMBER	POINT	STATION	NORTHING (ft)	EASTING (ft)	RADIUS (ft)	DEGREE OF CURVATURE	DELTA	LENGTH (ft)	TANGENT (ft)
	POB	500+00.00 NE	675,709.54	948,161.49					
	PC	500+40.75 NE	675,668.82	948,162.95			9°05'26.52" LT		
33	PI	500+69.89 NE	675,640.22	948,168.57	302	18°58'19.6"	11°01'31.4" LT	58.11	29.15
	PC	500+40.75 NE	675,668.82	948,162.95					
	PCC	500+98.86 NE	675,613.23	948,179.57					
34	PI	501+07.70 NE	675,605.05	948,182.90	72	79°34'38.9"	13°59'46.9" LT	17.59	8.84
	PCC	500+98.86 NE	675,613.23	948,179.57					
	PCC	501+16.45 NE	675,597.91	948,188.12					
35	PI	501+74.47 NE	675,551.06	948,222.35	92	62°16'40.9"	64°28'39.1" LT	103.53	58.02
	PCC	501+16.45 NE	675,597.91	948,188.12					
	PT	502+19.98 NE	675,561.77	948,279.37					
	POE	502+54.56 NE	675,568.15	948,313.36					

2

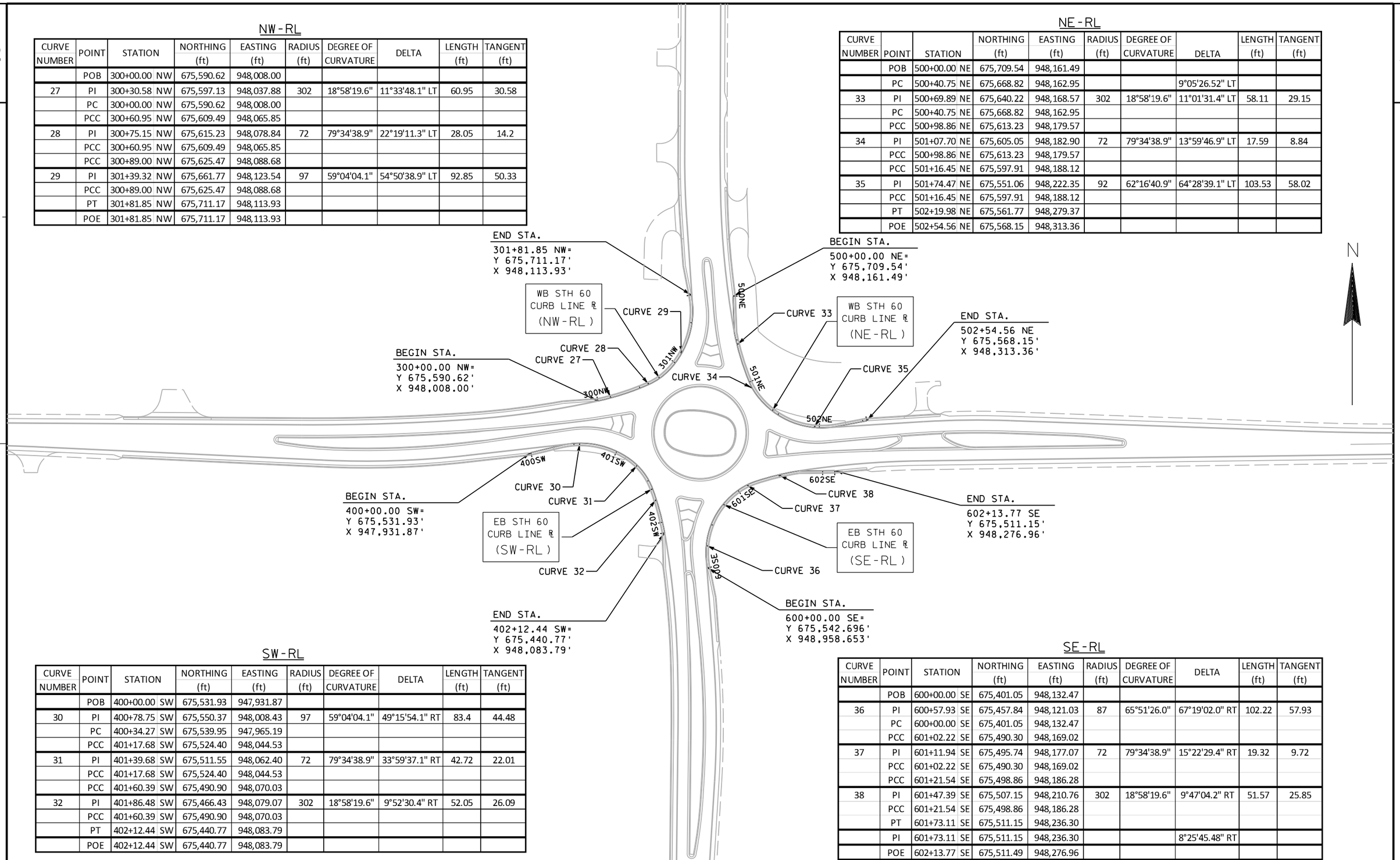

SW-RL

CURVE NUMBER	POINT	STATION	NORTHING (ft)	EASTING (ft)	RADIUS (ft)	DEGREE OF CURVATURE	DELTA	LENGTH (ft)	TANGENT (ft)
	POB	400+00.00 SW	675,531.93	947,931.87					
30	PI	400+78.75 SW	675,550.37	948,008.43	97	59°04'04.1"	49°15'54.1" RT	83.4	44.48
	PC	400+34.27 SW	675,539.95	947,965.19					
	PCC	401+17.68 SW	675,524.40	948,044.53					
31	PI	401+39.68 SW	675,511.55	948,062.40	72	79°34'38.9"	33°59'37.1" RT	42.72	22.01
	PCC	401+17.68 SW	675,524.40	948,044.53					
	PCC	401+60.39 SW	675,490.90	948,070.03					
32	PI	401+86.48 SW	675,466.43	948,079.07	302	18°58'19.6"	9°52'30.4" RT	52.05	26.09
	PCC	401+60.39 SW	675,490.90	948,070.03					
	PT	402+12.44 SW	675,440.77	948,083.79					
	POE	402+12.44 SW	675,440.77	948,083.79					

SE-RL

CURVE NUMBER	POINT	STATION	NORTHING (ft)	EASTING (ft)	RADIUS (ft)	DEGREE OF CURVATURE	DELTA	LENGTH (ft)	TANGENT (ft)
	POB	600+00.00 SE	675,401.05	948,132.47					
36	PI	600+57.93 SE	675,457.84	948,121.03	87	65°51'26.0"	67°19'02.0" RT	102.22	57.93
	PC	600+00.00 SE	675,401.05	948,132.47					
	PCC	601+02.22 SE	675,490.30	948,169.02					
37	PI	601+11.94 SE	675,495.74	948,177.07	72	79°34'38.9"	15°22'29.4" RT	19.32	9.72
	PCC	601+02.22 SE	675,490.30	948,169.02					
	PCC	601+21.54 SE	675,498.86	948,186.28					
38	PI	601+47.39 SE	675,507.15	948,210.76	302	18°58'19.6"	9°47'04.2" RT	51.57	25.85
	PCC	601+21.54 SE	675,498.86	948,186.28					
	PT	601+73.11 SE	675,511.15	948,236.30					
	PI	601+73.11 SE	675,511.15	948,236.30			8°25'45.48" RT		
	POE	602+13.77 SE	675,511.49	948,276.96					

PROJECT NO:3042-00-73	HWY:STH 60	COUNTY:DODGE	ALIGNMENT DETAILS	SHEET 58	E

2

BWB-RL

CURVE NUMBER	POINT	STATION	NORTHING (ft)	EASTING (ft)	RADIUS (ft)	DEGREE OF CURVATURE	DELTA	LENGTH (ft)	TANGENT (ft)
40	PI	10+40.69 BWB	675,567.03	948,248.11	200	28°38'52.4"	22°59'57.7" LT	80.28	40.69
	PC	10+00.00 BWB	675,581.93	948,210.24					
	PT	10+80.28 BWB	675,568.11	948,288.78					

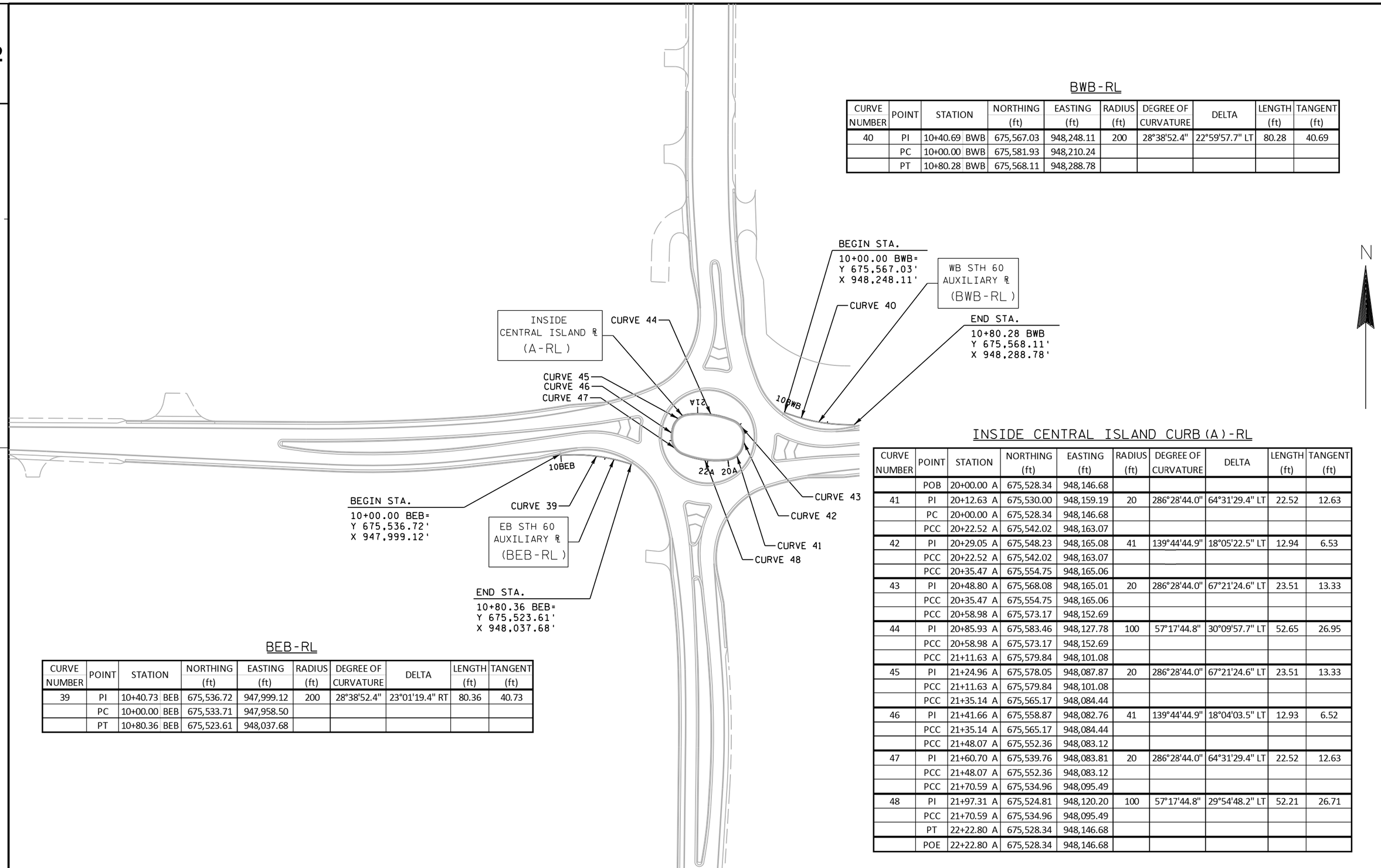

INSIDE CENTRAL ISLAND CURB(A)-RL

CURVE NUMBER	POINT	STATION	NORTHING (ft)	EASTING (ft)	RADIUS (ft)	DEGREE OF CURVATURE	DELTA	LENGTH (ft)	TANGENT (ft)
	POB	20+00.00 A	675,528.34	948,146.68					
41	PI	20+12.63 A	675,530.00	948,159.19	20	286°28'44.0"	64°31'29.4" LT	22.52	12.63
	PC	20+00.00 A	675,528.34	948,146.68					
	PCC	20+22.52 A	675,542.02	948,163.07					
42	PI	20+29.05 A	675,548.23	948,165.08	41	139°44'44.9"	18°05'22.5" LT	12.94	6.53
	PCC	20+22.52 A	675,542.02	948,163.07					
	PCC	20+35.47 A	675,554.75	948,165.06					
43	PI	20+48.80 A	675,568.08	948,165.01	20	286°28'44.0"	67°21'24.6" LT	23.51	13.33
	PCC	20+35.47 A	675,554.75	948,165.06					
	PCC	20+58.98 A	675,573.17	948,152.69					
44	PI	20+85.93 A	675,583.46	948,127.78	100	57°17'44.8"	30°09'57.7" LT	52.65	26.95
	PCC	20+58.98 A	675,573.17	948,152.69					
	PCC	21+11.63 A	675,579.84	948,101.08					
45	PI	21+24.96 A	675,578.05	948,087.87	20	286°28'44.0"	67°21'24.6" LT	23.51	13.33
	PCC	21+11.63 A	675,579.84	948,101.08					
	PCC	21+35.14 A	675,565.17	948,084.44					
46	PI	21+41.66 A	675,558.87	948,082.76	41	139°44'44.9"	18°04'03.5" LT	12.93	6.52
	PCC	21+35.14 A	675,565.17	948,084.44					
	PCC	21+48.07 A	675,552.36	948,083.12					
47	PI	21+60.70 A	675,539.76	948,083.81	20	286°28'44.0"	64°31'29.4" LT	22.52	12.63
	PCC	21+48.07 A	675,552.36	948,083.12					
	PCC	21+70.59 A	675,534.96	948,095.49					
48	PI	21+97.31 A	675,524.81	948,120.20	100	57°17'44.8"	29°54'48.2" LT	52.21	26.71
	PCC	21+70.59 A	675,534.96	948,095.49					
	PT	22+22.80 A	675,528.34	948,146.68					
	POE	22+22.80 A	675,528.34	948,146.68					

BEB-RL

CURVE NUMBER	POINT	STATION	NORTHING (ft)	EASTING (ft)	RADIUS (ft)	DEGREE OF CURVATURE	DELTA	LENGTH (ft)	TANGENT (ft)
39	PI	10+40.73 BEB	675,536.72	947,999.12	200	28°38'52.4"	23°01'19.4" RT	80.36	40.73
	PC	10+00.00 BEB	675,533.71	947,958.50					
	PT	10+80.36 BEB	675,523.61	948,037.68					

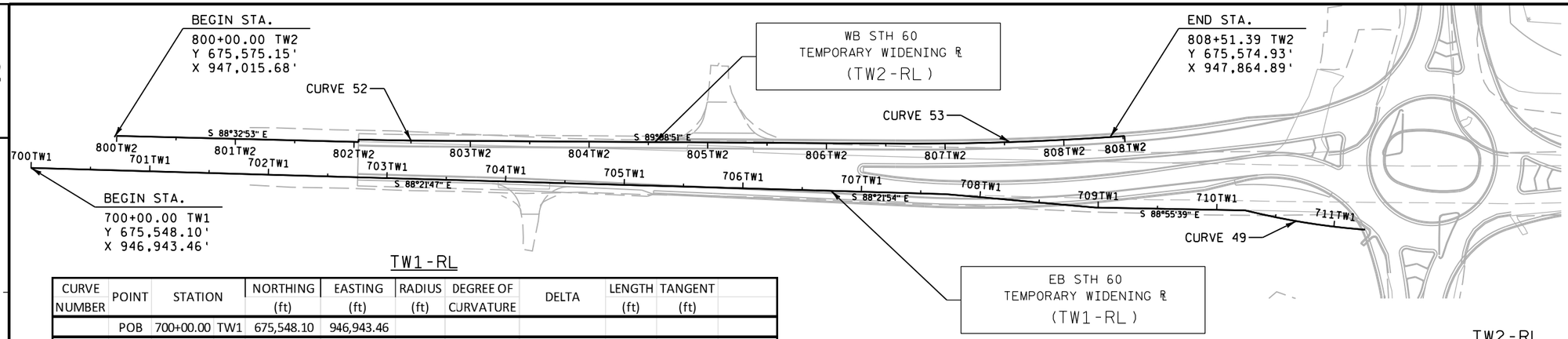

TW1-RL

CURVE NUMBER	POINT	STATION	NORTHING (ft)	EASTING (ft)	RADIUS (ft)	DEGREE OF CURVATURE	DELTA	LENGTH (ft)	TANGENT (ft)
	POB	700+00.00 TW1	675,548.10	946,943.46					
	PI	706+61.37 TW1	675,529.21	947,604.56			0°00'06.5" LT		
	PI	707+71.14 TW1	675,526.08	947,714.29			3°27'20.1" RT		
	PI	708+01.83 TW1	675,523.35	947,744.85			0°06'01.7" RT		
	PI	708+32.49 TW1	675,520.58	947,775.39			0°01'54.0" RT		
	PI	708+59.90 TW1	675,518.09	947,802.69			0°16'16.1" LT		
	PI	708+97.63 TW1	675,514.83	947,840.28			3°52'44.4" LT		
	PI	710+23.70 TW1	675,512.47	947,966.32			12°07'30.5" RT		
49	PI	711+03.18 TW1	675,494.32	948,043.70	596.22	9°36'35.7"	13°24'47.3" LT	139.58	70.11
	PC	710+33.07 TW1	675,510.33	947,975.44					
	PT	711+72.64 TW1	675,494.59	948,113.81					
50	PI	712+30.33 TW1	675,494.80	948,171.49	596.22	9°36'35.7"	8°20'33.6" LT	86.81	43.48
	PC	711+86.85 TW1	675,494.64	948,128.01					
	PT	712+73.66 TW1	675,501.27	948,214.49					
	PI	712+97.27 TW1	675,504.79	948,237.84			0°02'23.8" LT		
51	PI	713+98.15 TW1	675,519.87	948,337.58	596	9°36'48.2"	8°04'26.9" RT	83.99	42.06
	PC	713+56.08 TW1	675,513.58	948,295.99					
	PT	714+40.07 TW1	675,520.25	948,379.64					
	PI	714+46.57 TW1	675,520.31	948,386.14			0°07'59.3" RT		
	PI	714+67.50 TW1	675,520.46	948,407.07			0°17'22.9" LT		
	PI	717+76.16 TW1	675,524.12	948,715.71			0°02'45.6" LT		
	PI	719+40.53 TW1	675,526.20	948,880.07			0°09'08.0" LT		
	PI	721+33.33 TW1	675,529.16	949,072.84			0°05'29.7" LT		
	PI	722+62.59 TW1	675,531.35	949,202.09					
	POE	723+78.66 TW1	675,533.20	949,318.15					

TW2-RL

CURVE NUMBER	POINT	STATION	NORTHING (ft)	EASTING (ft)	RADIUS (ft)	DEGREE OF CURVATURE	DELTA	LENGTH (ft)	TANGENT (ft)
	POB	800+00.00 TW2	675,575.15	947,015.68					
	PI	802+03.80 TW2	675,569.99	947,219.42			89°56'58.1" LT		
52	PI	802+35.74 TW2	675,571.21	947,249.40	2983	1°55'14.7"	1°09'00.0" LT	59.87	29.94
	PC	802+05.80 TW2	675,571.99	947,219.47					
	PT	802+65.67 TW2	675,571.02	947,279.33					
53	PI	807+54.83 TW2	675,568.01	947,768.48	2483	2°18'27.1"	4°27'31.8" LT	193.23	96.66
	PC	806+58.16 TW2	675,568.61	947,671.82					
	PT	808+51.39 TW2	675,574.93	947,864.89					
	POE	808+51.39 TW2	675,574.93	947,864.89					

TW3-RL

CURVE NUMBER	POINT	STATION	NORTHING (ft)	EASTING (ft)	RADIUS (ft)	DEGREE OF CURVATURE	DELTA	LENGTH (ft)	TANGENT (ft)
	POB	900+00.00 TW3	675,573.34	948,476.65					
54	PI	904+07.57 TW3	675,558.66	948,883.96	2983	1°55'14.7"	2°51'36.0" LT	148.9	74.47
	PC	903+33.11 TW3	675,561.34	948,809.54					
	PT	904+82.01 TW3	675,559.69	948,958.42					
	PI	904+84.01 TW3	675,557.69	948,958.44					
	POE	907+22.66 TW3	675,560.43	949,197.08					

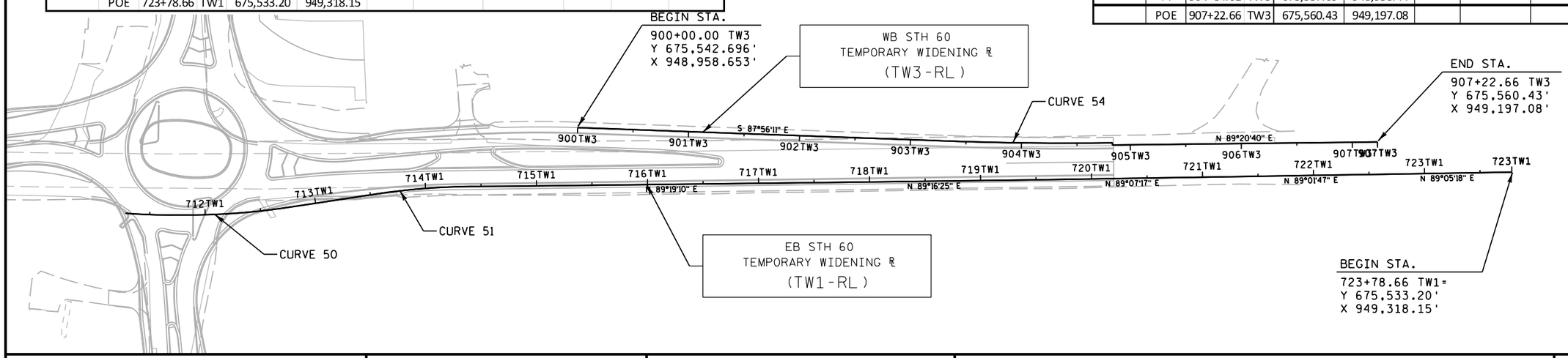

PROJECT NO:3042-00-73	HWY:STH 60	COUNTY:DODGE	ALIGNMENT DETAILS	SHEET 60	E

3

DATE 27SEP13 E S T I M A T E O F Q U A N T I T I E S

LINE NUMBER	ITEM	ITEM DESCRIPTION	UNIT	TOTAL	3042-00-73 QUANTITY
0010	201.0120	CLEARING	ID	36.000	36.000
0020	201.0220	GRUBBING	ID	36.000	36.000
0030	203.0100	REMOVING SMALL PIPE CULVERTS	EACH	12.000	12.000
0040	204.0150	REMOVING CURB & GUTTER	LF	464.000	464.000
0050	204.0165	REMOVING GUARDRAIL	LF	35.000	35.000
0060	204.0195	REMOVING CONCRETE BASES	EACH	2.000	2.000
0070	204.9060.S	REMOVING (ITEM DESCRIPTION) 01. POLE	EACH	2.000	2.000
0080	204.9060.S	REMOVING (ITEM DESCRIPTION) 02. STOP SIGN FLASHERS	EACH	2.000	2.000
0090	205.0100	EXCAVATION COMMON	CY	20,000.000	20,000.000
0100	205.0501.S	EXCAVATION, HAULING, AND DISPOSAL OF PETROLEUM CONTAMINATED SOIL	TON	250.000	250.000
0110	213.0100	FINISHING ROADWAY (PROJECT) 01. 3042-00-73	EACH	1.000	1.000
0120	305.0110	BASE AGGREGATE DENSE 3/4-INCH	TON	690.000	690.000
0130	305.0120	BASE AGGREGATE DENSE 1 1/4-INCH	TON	18,790.000	18,790.000
0140	312.0110	SELECT CRUSHED MATERIAL	TON	22,310.000	22,310.000
0150	405.0100	COLORING CONCRETE RED	CY	300.000	300.000
0160	415.0080	CONCRETE PAVEMENT 8-INCH	SY	90.000	90.000
0170	416.0508	CONCRETE ROUNDABOUT TRUCK APRON 8-INCH	SY	540.000	540.000
0180	455.0105	ASPHALTIC MATERIAL PG58-28	TON	135.000	135.000
0190	455.0120	ASPHALTIC MATERIAL PG64-28	TON	115.000	115.000
0200	455.0605	TACK COAT	GAL	375.000	375.000
0210	460.1110	HMA PAVEMENT TYPE E-10	TON	4,630.000	4,630.000
0220	460.2000	INCENTIVE DENSITY HMA PAVEMENT	DOL	2,970.000	2,970.000
0230	465.0120	ASPHALTIC SURFACE DRIVEWAYS AND FIELD ENTRANCES	TON	90.000	90.000
0240	465.0125	ASPHALTIC SURFACE TEMPORARY	TON	980.000	980.000
0250	465.0310	ASPHALTIC CURB	LF	185.000	185.000
0260	465.0315	ASPHALTIC FLUMES	SY	20.000	20.000
0270	520.4018	CULVERT PIPE TEMPORARY 18-INCH	LF	100.000	100.000
0280	520.4024	CULVERT PIPE TEMPORARY 24-INCH	LF	24.000	24.000
0290	520.4030	CULVERT PIPE TEMPORARY 30-INCH	LF	34.000	34.000
0300	522.0118	CULVERT PIPE REINFORCED CONCRETE CLASS III 18-INCH	LF	92.000	92.000
0310	522.1012	APRON ENDWALLS FOR CULVERT PIPE REINFORCED CONCRETE 12-INCH	EACH	3.000	3.000
0320	522.1015	APRON ENDWALLS FOR CULVERT PIPE REINFORCED CONCRETE 15-INCH	EACH	3.000	3.000
0330	522.1018	APRON ENDWALLS FOR CULVERT PIPE REINFORCED CONCRETE 18-INCH	EACH	8.000	8.000
0340	522.1024	APRON ENDWALLS FOR CULVERT PIPE REINFORCED CONCRETE 24-INCH	EACH	1.000	1.000
0350	522.1036	APRON ENDWALLS FOR CULVERT PIPE REINFORCED CONCRETE 36-INCH	EACH	1.000	1.000
0360	601.0405	CONCRETE CURB & GUTTER 18-INCH TYPE A **P**	LF	217.000	217.000
0370	601.0411	CONCRETE CURB & GUTTER 30-INCH TYPE D **P**	LF	1,320.000	1,320.000
0380	601.0553	CONCRETE CURB AND GUTTER 4-INCH SLOPED 36-INCH TYPE D **P**	LF	4,540.000	4,540.000
0390	601.0582	CONCRETE CURB & GUTTER 4-INCH SLOPED 36-INCH TYPE T **P**	LF	333.000	333.000
0400	601.0600	CONCRETE CURB PEDESTRIAN **P**	LF	153.000	153.000
0410	602.0405	CONCRETE SIDEWALK 4-INCH	SF	13,990.000	13,990.000

3

DATE 27SEP13 E S T I M A T E O F Q U A N T I T I E S

LINE NUMBER	ITEM	ITEM DESCRIPTION	UNIT	TOTAL	3042-00-73 QUANTITY
0420	602.0515	CURB RAMP DETECTABLE WARNING FIELD NATURAL PATINA	SF	144.000	144.000
0430	606.0200	RIPRAP MEDIUM	CY	180.000	180.000
0440	607.0406	STORM SEWER PIPE COMPOSITE 6-INCH	LF	60.000	60.000
0450	608.0312	STORM SEWER PIPE REINFORCED CONCRETE CLASS III 12-INCH	LF	76.000	76.000
0460	608.0315	STORM SEWER PIPE REINFORCED CONCRETE CLASS III 15-INCH	LF	433.000	433.000
0470	608.0318	STORM SEWER PIPE REINFORCED CONCRETE CLASS III 18-INCH	LF	56.000	56.000
0480	608.0324	STORM SEWER PIPE REINFORCED CONCRETE CLASS III 24-INCH	LF	406.000	406.000
0490	608.0330	STORM SEWER PIPE REINFORCED CONCRETE CLASS III 30-INCH	LF	85.000	85.000
0500	608.0336	STORM SEWER PIPE REINFORCED CONCRETE CLASS III 36-INCH	LF	412.000	412.000
0510	611.0530	MANHOLE COVERS TYPE J	EACH	7.000	7.000
0520	611.0624	INLET COVERS TYPE H	EACH	3.000	3.000
0530	611.0627	INLET COVERS TYPE HM	EACH	9.000	9.000
0540	611.0636	INLET COVERS TYPE HM-S	EACH	3.000	3.000
0550	611.0639	INLET COVERS TYPE H-S	EACH	5.000	5.000
0560	611.0642	INLET COVERS TYPE MS	EACH	2.000	2.000
0570	611.0652	INLET COVERS TYPE T	EACH	3.000	3.000
0580	611.2005	MANHOLES 5-FT DIAMETER	EACH	3.000	3.000
0590	611.2006	MANHOLES 6-FT DIAMETER	EACH	5.000	5.000
0600	611.3004	INLETS 4-FT DIAMETER	EACH	2.000	2.000
0610	611.3225	INLETS 2X2.5-FT	EACH	2.000	2.000
0620	611.3230	INLETS 2X3-FT	EACH	18.000	18.000
0630	611.3901	INLETS MEDIAN 1 GRATE	EACH	2.000	2.000
0640	611.8110	ADJUSTING MANHOLE COVERS	EACH	3.000	3.000
0650	611.8120.S	COVER PLATES TEMPORARY	EACH	10.000	10.000
0660	611.9800.S	PIPE GRATES	EACH	4.000	4.000
0670	612.0106	PIPE UNDERDRAIN 6-INCH	LF	2,680.000	2,680.000
0680	612.0700	DRAIN TILE EXPLORATION	LF	400.000	400.000
0690	612.0806	APRON ENDWALLS FOR UNDERDRAIN REINFORCED CONCRETE 6-INCH	EACH	1.000	1.000
0700	618.0100	MAINTENANCE AND REPAIR OF HAUL ROADS (PROJECT) 01. 3042-00-73	EACH	1.000	1.000
0710	619.1000	MOBILIZATION	EACH	1.000	1.000
0720	620.0300	CONCRETE MEDIAN SLOPED NOSE	SF	510.000	510.000
0730	621.0100	LANDMARK REFERENCE MONUMENTS	EACH	5.000	5.000
0740	624.0100	WATER	MGAL	580.000	580.000
0750	625.0500	SALVAGED TOPSOIL **P**	SY	15,100.000	15,100.000
0760	627.0200	MULCHING **P**	SY	15,100.000	15,100.000
0770	628.1504	SILT FENCE	LF	5,700.000	5,700.000
0780	628.1520	SILT FENCE MAINTENANCE	LF	5,700.000	5,700.000
0790	628.1905	MOBILIZATIONS EROSION CONTROL	EACH	8.000	8.000
0800	628.1910	MOBILIZATIONS EMERGENCY EROSION CONTROL	EACH	7.000	7.000
0810	628.2004	EROSION MAT CLASS I TYPE B	SY	2,780.000	2,780.000
0820	628.2006	EROSION MAT URBAN CLASS I TYPE A	SY	4,980.000	4,980.000
0830	628.7005	INLET PROTECTION TYPE A	EACH	20.000	20.000
0840	628.7015	INLET PROTECTION TYPE C	EACH	23.000	23.000
0850	628.7504	TEMPORARY DITCH CHECKS	LF	192.000	192.000
0860	628.7555	CULVERT PIPE CHECKS	EACH	15.000	15.000
0870	629.0210	FERTILIZER TYPE B	CWT	12.000	12.000

3

3

3

DATE 27SEP13 E S T I M A T E O F Q U A N T I T I E S

LINE NUMBER	ITEM	ITEM DESCRIPTION	UNIT	TOTAL	3042-00-73 QUANTITY
0880	630.0120	SEEDING MIXTURE NO. 20	LB	470.000	470.000
0890	630.0140	SEEDING MIXTURE NO. 40	LB	11.000	11.000
0900	630.0200	SEEDING TEMPORARY	LB	500.000	500.000
0910	633.5200	MARKERS CULVERT END	EACH	10.000	10.000
0920	634.0614	POSTS WOOD 4X6-INCH X 14-FT	EACH	17.000	17.000
0930	634.0616	POSTS WOOD 4X6-INCH X 16-FT	EACH	31.000	31.000
0940	634.0618	POSTS WOOD 4X6-INCH X 18-FT	EACH	8.000	8.000
0950	634.0620	POSTS WOOD 4X6-INCH X 20-FT	EACH	4.000	4.000
0960	634.0812	POSTS TUBULAR STEEL 2X2-INCH X 12-FT	EACH	8.000	8.000
0970	634.0814	POSTS TUBULAR STEEL 2X2-INCH X 14-FT	EACH	4.000	4.000
0980	637.2210	SIGNS TYPE II REFLECTIVE H	SF	619.040	619.040
0990	637.2230	SIGNS TYPE II REFLECTIVE F	SF	85.000	85.000
1000	638.2602	REMOVING SIGNS TYPE II	EACH	60.000	60.000
1010	638.3000	REMOVING SMALL SIGN SUPPORTS	EACH	33.000	33.000
1020	642.5001	FIELD OFFICE TYPE B	EACH	1.000	1.000
1030	643.0100	TRAFFIC CONTROL (PROJECT) 01. 3042-00-73	EACH	1.000	1.000
1040	643.0300	TRAFFIC CONTROL DRUMS	DAY	15,186.000	15,186.000
1050	643.0420	TRAFFIC CONTROL BARRICADES TYPE III	DAY	1,332.000	1,332.000
1060	643.0500	TRAFFIC CONTROL FLEXIBLE TUBULAR MARKER POSTS	EACH	81.000	81.000
1070	643.0600	TRAFFIC CONTROL FLEXIBLE TUBULAR MARKER BASES	EACH	81.000	81.000
1080	643.0705	TRAFFIC CONTROL WARNING LIGHTS TYPE A	DAY	2,664.000	2,664.000
1090	643.0715	TRAFFIC CONTROL WARNING LIGHTS TYPE C	DAY	2,534.000	2,534.000
1100	643.0900	TRAFFIC CONTROL SIGNS	DAY	5,718.000	5,718.000
1110	643.0920	TRAFFIC CONTROL COVERING SIGNS TYPE II	EACH	50.000	50.000
1120	643.2000	TRAFFIC CONTROL DETOUR (PROJECT) 01. 3042-00-73	EACH	1.000	1.000
1130	643.3000	TRAFFIC CONTROL DETOUR SIGNS	DAY	10,719.000	10,719.000
1140	645.0120	GEOTEXTILE FABRIC TYPE HR	SY	490.000	490.000
1150	646.0106	PAVEMENT MARKING EPOXY 4-INCH	LF	17,730.000	17,730.000
1160	646.0126	PAVEMENT MARKING EPOXY 8-INCH	LF	41.000	41.000
1170	646.0600	REMOVING PAVEMENT MARKINGS	LF	1,275.000	1,275.000
1180	646.0883.S	PAVEMENT MARKING GROOVED WET REFLECTIVE TAPE 8-INCH	LF	270.000	270.000
1190	647.0166	PAVEMENT MARKING ARROWS EPOXY TYPE 2	EACH	4.000	4.000
1200	647.0456	PAVEMENT MARKING CURB EPOXY	LF	470.000	470.000
1210	647.0606	PAVEMENT MARKING ISLAND NOSE EPOXY	EACH	10.000	10.000
1220	647.0726	PAVEMENT MARKING DIAGONAL EPOXY 12-INCH	LF	340.000	340.000
1230	649.0200	TEMPORARY PAVEMENT MARKING REFLECTIVE PAINT 4-INCH	LF	7,104.000	7,104.000
1240	649.0400	TEMPORARY PAVEMENT MARKING REMOVABLE TAPE 4-INCH	LF	8,942.000	8,942.000
1250	649.1000	TEMPORARY PAVEMENT MARKING STOP LINE REMOVABLE TAPE 12-INCH	LF	71.000	71.000
1260	650.4000	CONSTRUCTION STAKING STORM SEWER	EACH	43.000	43.000
1270	650.4500	CONSTRUCTION STAKING SUBGRADE **P**	LF	6,968.000	6,968.000
1280	650.5000	CONSTRUCTION STAKING BASE **P**	LF	6,968.000	6,968.000
1290	650.5500	CONSTRUCTION STAKING CURB GUTTER AND CURB & GUTTER **P**	LF	1,381.000	1,381.000
1300	650.6000	CONSTRUCTION STAKING PIPE CULVERTS	EACH	3.000	3.000
1310	650.8500	CONSTRUCTION STAKING ELECTRICAL INSTALLATIONS (PROJECT) 01. 3042-00-73	LS	1.000	1.000
1320	650.9910	CONSTRUCTION STAKING SUPPLEMENTAL CONTROL (PROJECT) 01. 3042-00-73	LS	1.000	1.000

3

3

DATE 27SEP13 E S T I M A T E O F Q U A N T I T I E S

LINE NUMBER	ITEM	ITEM DESCRIPTION	UNIT	TOTAL	3042-00-73 QUANTITY
1330	650.9920	CONSTRUCTION STAKING SLOPE STAKES **P**	LF	6,968.000	6,968.000
1340	652.0225	CONDUIT RIGID NONMETALLIC SCHEDULE 40 2-INCH	LF	1,624.000	1,624.000
1350	653.0140	PULL BOXES STEEL 24X42-INCH	EACH	11.000	11.000
1360	654.0106	CONCRETE BASES TYPE 6	EACH	11.000	11.000
1370	655.0610	ELECTRICAL WIRE LIGHTING 12 AWG **P**	LF	1,617.000	1,617.000
1380	655.0615	ELECTRICAL WIRE LIGHTING 10 AWG **P**	LF	8,647.000	8,647.000
1390	656.0200	ELECTRICAL SERVICE METER BREAKER PEDESTAL (LOCATION) 01. CB100	LS	1.000	1.000
1400	657.0255	TRANSFORMER BASES BREAKAWAY 11 1/2-INCH BOLT CIRCLE	EACH	11.000	11.000
1410	657.0327	POLES TYPE 6-ALUMINUM	EACH	11.000	11.000
1420	657.0615	LUMINAIRE ARMS SINGLE MEMBER 4 1/2-INCH CLAMP 8-FT	EACH	11.000	11.000
1430	690.0150	SAWING ASPHALT	LF	4,340.000	4,340.000
1440	715.0415	INCENTIVE STRENGTH CONCRETE PAVEMENT	DOL	500.000	500.000
1450	ASP.1T0A	ON-THE-JOB TRAINING APPRENTICE AT $5. 00/HR	HRS	450.000	450.000
1460	ASP.1T0G	ON-THE-JOB TRAINING GRADUATE AT $5.00/HR	HRS	350.000	350.000
1470	SPV.0060	SPECIAL 01. REMOVE AND SALVAGE ADOPT A HIGHWAY SIGN	EACH	3.000	3.000
1480	SPV.0060	SPECIAL 02. CONCRETE CONTROL CABINET BASE TYPE SPECIAL	EACH	1.000	1.000
1490	SPV.0060	SPECIAL 03. LIGHTING CONTROL CABINET	EACH	1.000	1.000
1500	SPV.0060	SPECIAL 04. LUMINAIRES UTILITY LED CATEGORY A	EACH	11.000	11.000
1510	SPV.0060	SPECIAL 05. TEMPORARY STORM SEWER INLET GRATE	EACH	1.000	1.000
1520	SPV.0060	SPECIAL 06. UTILITY LINE OPENING	EACH	1.000	1.000
1530	SPV.0090	SPECIAL 01. CONCRETE CURB & GUTTER 4-INCH SLOPED 36-INCH TYPE D MODIFIED **P**	LF	173.000	173.000
1540	SPV.0090	SPECIAL 02. PAVEMENT MARKING GROOVED PREFORMED THERMOPLASTIC 18-INCH 2-FOOT SKIP	LF	66.000	66.000
1550	SPV.0105	SPECIAL 01. CONSTRUCTION STAKING ROUNDABOUT	LS	1.000	1.000
1560	SPV.0165	SPECIAL 01. WEED BARRIER	SF	3,300.000	3,300.000
1570	SPV.0165	SPECIAL 02. ROCK MULCH	SF	3,300.000	3,300.000

3

3

CLEARING AND GRUBBING ITEMS

STATION - STATION	LOCATION	201.0120 CLEARING ID	201.0220 GRUBBING ID
CATEGORY CODE 0010			
STAGE 2			
210+50 SB	LT	12	12
210+95 SB	LT	12	12
211+20 SB	LT	12	12
STAGE 2 SUBTOTALS		36	36
	TOTALS	**36**	**36**

REMOVING CURB & GUTTER

DESCRIPTION	LOCATION	204.0150 LF
CATEGORY CODE 0010		
STAGE 1		
SOUTHWEST CURB RADIUS		78
SOUTHEAST CURB RADIUS		64
SOUTH CTH P ISLAND		92
STAGE 1 SUBTOTAL		234
STAGE 2		
NORTHWEST CURB RADIUS		63
NORTHEAST CURB RADIUS		75
NORTH CTH P ISLAND		92
STAGE 2 SUBTOTAL		230
	TOTAL	**464**

REMOVING POLE ITEMS

STATION - STATION	LOCATION	204.0195 REMOVING CONCRETE BASES EACH	204.9060.S.01 REMOVING POLE EACH	204.9060.S.02 REMOVING STOP SIGN FLASHERS EACH
CATEGORY CODE 0010				
STAGE 1				
108+35 EB	RT	1	1	1
STAGE 1 SUBTOTAL		1	1	1
STAGE 2				
109+65 WB	LT	1	1	1
STAGE 2 SUBTOTAL		1	1	1
	TOTALS	**2**	**2**	**2**

3

REMOVING EXISTING CULVERTS

STATION	LOCATION	203.0100 REMOVING SMALL PIPE CULVERTS EACH	COMMENTS
CATEGORY CODE 0010			
STAGE 1			
199+50 NB	RT	1	REMOVE 44 LF OF CMCP 12"
4+10 C	RT	1	REMOVE 76 LF OF CMPA 27"X43"
207+00 SB	LT	1	REMOVE 28 LF OF CMCP 18"
STAGE 1 SUBTOTAL		3	
STAGE 2			
107+95 WB	LT	1	REMOVE 40 LF OF CMCP 18"
111+25 WB	LT	1	REMOVE 26 LF OF CMCP 18"
210+90 NB	RT	1	REMOVE 46 LF OF CMPA 18"X24"
211+30		1	REMOVE 46 LF OF CMCP 21"
211+60 SB	LT	1	REMOVE 40 LF OF CMCP 18"
212+70 SB	LT	1	REMOVE 30 LF OF CMCP 18"
213+65 NB	RT	1	REMOVE 30 LF OF CMCP 18"
2+50 C	LT	1	REMOVE 78 LF OF CMPA 27"X43"
110+50		1	REMOVE 80 LF OF CMPA 31"X50" (FIRST PORTION)
STAGE 2B SUBTOTAL		9	
STAGE 3			
110+50		--	REMOVE 80 LF OF CMPA 31"X50" (SECOND PORTION)
STAGE 3 SUBTOTAL		--	
	TOTAL	**12**	

REMOVING GUARDRAIL

STATION - STATION	LOCATION	204.0165 LF	COMMENTS
CATEGORY CODE 0010			
STAGE 2			
110+85 WB	LT	35	POLE GUARDRAIL
STAGE 2 SUBTOTAL		35	
	TOTALS	**35**	

EXCAVATION, HAULING AND DISPOSAL OF PETROLEUM CONTAMINATED SOIL

STATION - STATION	LOCATION	205.0501.S TON
CATEGORY CODE 0010		
STAGE 2		
107+75 EB - 110+50 EB	0' - 200' LT	250
	TOTAL	**250**

FINISHING ROADWAY

STATION - STATION	213.0100 EACH
CATEGORY CODE 0010	
PROJECT 3042-00-73	1
	1

3

EARTHWORK SUMMARY

Division	From/To Station	Location	205.0100 Common Excavation (1) Cut (2)	EBS Excavation (3)	Salvaged/ Unusable Pavement Material (4)	Available Material (5)	Unexpanded Fill	Expanded Fill Factor 1.30	Mass Ordinate +/- (6)	Waste	Comment:
STAGE 1											
Northbound CTH P	199+00 NB - 207+63 NB	RT & LT	3,828	0	0	3,828	265	345	3,484		
Southbound CTH P	204+00 SB - 207+66 SB	LT	842	0	0	842	54	70	772		
Circle	3+64 C - 1+13 C	RT	200	0	0	200	200	260	-60		
Temporary Widening TW1	701+19 TW1 - 711+24 TW1	RT	236	0	0	236	382	497	-261		
Temporary Widening TW1	712+41 TW1 - 721+64 TW1	RT	205	0	0	205	1,313	1,707	-1,502		
STAGE 1 Subtotal			5,311	0	0	5,311	2,214	2,878	2,433	2,433	
STAGE 2											
Eastbound STH 60	100+00 EB - 108+36 EB	RT & LT	2,330	0	0	2,330	16	21	2,309		
Eastbound STH 60	109+89 EB - 117+46 EB	RT & LT	1,001	0	0	1,001	243	316	685		
Westbound STH 60	104+50 WB - 108+36 WB	RT & LT	1,030	0	0	1,030	74	96	934		
Westbound STH 60	109+92 WB - 113+50 WB	LT	272	0	0	272	802	1,043	-771		
Northbound CTH P	209+09 NB - 217+04 NB	RT & LT	3,954	0	0	3,954	420	546	3,408		
Southbound CTH P	209+11 SB - 210+00 SB	LT	65	0	0	65	45	59	7		
Temporary Widening TW2	801+12 TW2 - 807+22 TW2	LT	109	0	0	109	109	142	-33		
Temporary Widening TW3	902+25 TW3 - 906+38 TW3	LT	44	0	0	44	296	385	-341		
Circle	1+00 C - 4+35 C	RT & LT	800	0	290	510	1,000	1,300	-790		
5% EBS	Undistributed		0	500	500	-500	0	0	-500		
STAGE 2 Subtotal			9,605	500	790	8,815	3,005	3,907	4,909	4,909	
STAGE 3											
Eastbound STH 60	100+00 EB - 108+36 EB	RT	2,353	0	0	2,353	80	104	2,249		
Eastbound STH 60	109+89 EB - 117+46 EB	RT	1,571	0	0	1,571	68	88	1,483		
5% EBS	Undistributed		0	200	200	-200	0	0	-200		
STAGE 3 Subtotal			3,924	200	200	3,724	148	192	3,532	3,532	
STAGE 4											
Eastbound STH 60	100+00 EB - 105+17 EB	LT	308	0	0	308	5	7	302		
Eastbound STH 60	114+90 EB - 117+46	LT	152	0	0	152	0	0	152		
STAGE 4 Subtotal			460	0	0	460	5	7	454	454	
Grand Total			20,000		990	18,310	5,372	6,984	11,326	11,326	

1) Common Excavation is the sum of the Cut and EBS Excavation columns.
2) Salvaged/Unusable Pavement Material is included in Cut.
3) EBS Excavation to be backfilled with Select Crushed Material
4) Salvaged/Unusable Pavement Material = Length * Typical Width * Typical Depth
Value includes EBS
5) Available Material = Cut - Salvaged/Unusable Pavement Material
6) The Mass Ordinate + or - Qty calculated for the Stage. Plus quantity indicates an excess of material within the Division. Minus indicates a shortage of material within the Division.

3

AGGREGATE AND WATER ITEMS

STATION - STATION	LOCATION	305.0110 BASE AGGREGATE DENSE 3/4-INCH TON	305.0120 BASE AGGREGATE DENSE 1 1/4-INCH TON	312.0110 SELECT CRUSHED MATERIAL TON	624.0100 WATER MGAL
CATEGORY CODE 0010					
STAGE 1					
TEMPORARY ROAD TW1	LT & RT	105	1,921	--	27
199+00 NB - 207+63 NB	LT & RT	60	1,637	2,165	50
200+00 SB - 207+66 SB	LT & RT	18	1,314	1,857	43
109+89 EB - 110+50 EB	RT	--	55	82	2
CIRCLE	RT	--	243	365	8
SPLITTER ISLANDS	LT & RT	--	340	421	10
STAGE 1 SUBTOTALS		183	5,510	4,890	140
STAGE 2					
TEMPORARY ROAD TW2	LT	32	384	--	61
TEMPORARY ROAD TW3	LT	19	248	--	4
100+00 WB - 108+36 WB	LT & RT	32	1,557	1,760	45
106+16 EB - 108+36 EB	LT & RT	--	296	444	10
109+89 EB - 112+07 EB	LT & RT	--	143	214	5
109+92 WB - 117+46 WB	LT & RT	71	1,684	1,991	51
209+09 NB - 217+04 NB	LT & RT	64	2,128	2,684	67
209+11 SB - 217+04 SB	LT & RT	54	1,499	2,057	48
CIRCLE	LT & RT	--	1,006	736	23
SPLITTER ISLANDS	LT & RT	--	755	434	16
UNDISTRIBUTED EBS		--	--	1,600	--
STAGE 2 SUBTOTALS		272	9,700	11,920	330
STAGE 3					
100+00 EB - 106+67 EB	RT	36	1,255	1,760	40
110+50 EB - 117+46 EB	RT	112	1,305	1,690	40
UNDISTRIBUTED EBS		--	--	800	--
STAGE 3 SUBTOTALS		148	2,560	4,250	80
STAGE 4					
100+00 WB - 105+17 WB	RT	43	306	287	8
114+90 WB - 117+46 WB	RT	44	166	142	5
SPLITTER ISLANDS	LT & RT	--	548	821	17
STAGE 4 SUBTOTALS		87	1,020	1,250	30
TOTALS		**690**	**18,790**	**22,310**	**580**

CONCRETE PAVEMENT ITEMS

STATION - STATION	LOCATION	405.0100 COLORING CONCRETE (RED) CY	415.0080 CONCRETE PAVEMENT 8-INCH SY	416.0508 CONCRETE ROUNDABOUT TRUCK APRON 8-INCH SY	COMMENTS
CATEGORYCODE 0010					
STAGE 2					
400+26.31 SW - 401+12.32 SW	RT	10	45	--	TRUCK OVERTRACKING PAD
501+44.16 NE - 502+30.40 NE	LT	10	45	--	TRUCK OVERTRACKING PAD
CIRCLE	LT	120	--	540	
STAGE 2B SUBTOTALS		140	90	540	
TOTALS		**140**	**90**	**540**	
		XX			

XX QUANTITIES LISTED ELSEWHERE

TEMPORARY CULVERT PIPE ITEMS

STATION	LOCATION	520.4018 CULVERT PIPE TEMPORARY 18-INCH LF	520.4024 CULVERT PIPE TEMPORARY 24-INCH LF	520.4030 CULVERT PIPE TEMPORARY 30-INCH LF	COMMENTS
CATEGORY CODE 0010					
STAGE 1					
107+50 EB	RT	100	--	--	CONNECT TO NEW 18-INCH STORM SEWER
109+75 EB	RT	--	24	--	CONNECT TO NEW 24-INCH STORM SEWER
110+85 EB	RT	--	--	34	CONNECT TO EXISTING CMCP
STAGE 1 SUBTOTALS		100	24	34	
TOTALS		**100**	**24**	**34**	

3

3

CONCRETE SIDEWALK & CURB RAMP DETECTABLE WARNING FIELD ITEMS

STATION - STATION	LOCATION	602.0405 CONCRETE SIDEWALK 4-INCH SF	602.0515 CURB RAMP DETECTABLE WARNING FIELD NATURAL PATINA SF	405.0100 COLORING CONCRETE (RED) CY
CATEGORY CODE 0010				
STAGE 1				
203+55 NB - 206+75 NB	LT	3,410	--	42
STAGE 1 SUBTOTALS		3,410	--	42
STAGE 2				
107+62 EB - 108+28 EB	LT	880	36	8
109+89 EB - 110+41 EB	LT	880	36	8
209+20 -NB - 210+36 NE	LT	1,200	36	12
214+03 NB - 214+63 NB	LT	400	--	5
STAGE 2 SUBTOTALS		3,360	108	33
STAGE 3				
207+16 NB - 207+57 NB	LT	680	36	6
STAGE 3 SUBTOTALS		680	36	6
STAGE 4				
104+26EB - 107+62 EB	LT	3,280	--	39
110+41 EB - 111+37 EB	LT	930	--	11
111+89 EB - 113+91 EB	LT	2,330	--	29
STAGE 4 SUBTOTALS		6,540	--	79
TOTALS		**13,990**	**144**	**160**
				xx

CURB RAMPS PAID AREAS FOR AS CONCRETE SIDEWALK 4-INCH, AND ARE NOT COLORED.
ALL CURB RAMPS ARE TYPE 5

xx QUANTITIES LISTED ELSEWHERE

RIPRAP AND GEOTEXTILE FABRIC ITEMS

STATION	LOCATION	606.0200 RIPRAP MEDIUM CY	645.0120 GEOTEXTILE FABRIC TYPE HR SY
CATEGORY CODE 0010			
STAGE 1			
205+50 NB	RT	2	8
STAGE 1 SUBTOTALS		2	8
STAGE 2			
111+85 WB	LT	3	12
212+45 SB	LT	3	12
213+25 NB	RT	3	12
STAGE 2 SUBTOTALS		9	36
STAGE 3			
109+50 EB - 112+50 EB	RT	167	438
113+88	RT	2	8
STAGE 3 SUBTOTALS		169	446
TOTALS		**180**	**490**

SANITARY MANHOLE ITEMS

STATION	LOCATION	EXISTING RIM ELEVATION	NEW RIM ELEVATION	611.8110 ADJUSTING MANHOLE COVERS EACH
CATEGORY CODE 0010				
STAGE 2				
212+13.2 NB	19.0 RT	1039.56	1040.56	1
212+14.5 SB	24.3 LT	1039.74	1040.37	1
214+87.5 NB	25.0' RT	1042.13	1042.37	1
STAGE 2 SUBTOTALS				3
TOTALS				**3**

3

ASPHALTIC ITEMS

STATION - STATION	LOCATION	455.0120 ASPHALTIC MATERIAL PG64-28 TON	455.0105 ASPHALTIC MATERIAL PG58-28 TON	455.0605 TACK COAT GAL	460.1110 HMA PAVEMENT TYPE E-10 TON	465.0120 ASPHALTIC SURFACE DRIVEWAYS AND FIELD ENTRANCES TON	465.0125 ASPHALTIC SURFACE TEMPORARY TON	465.0315 ASPHALTIC FLUMES SY
CATEGORY CODE 0010								
STAGE 1								
701+19 TW1 - 711+24 TW1	RT	--	--	--	--	--	213	--
712+24 TW1 - 721+64 TW1	RT	--	--	--	--	--	230	--
SOUTH SPLITTER ISLAND		--	--	--	--	--	19	--
109+89 EB - 110+50 EB	RT	1	1	2	25	--	120	--
199+00 NB - 207+63 SB	RT	14	17	46	569	21	125	5
200+00 SB - 207+66 SB	LT	11	13	37	455	14	--	--
3+64 C - 1+13 C	RT	1	1	9	112	--	--	--
SOUTH LEG MEDIAN OPENING		--	--	1	7	--	--	--
STAGE 1 SUBTOTALS		27	32	95	1,168	35	707	5
STAGE 2								
TW2	LT	--	--	--	--	--	68	--
TW3	LT	--	--	--	--	--	46	--
WEST SPLITTER ISLAND		--	--	--	--	--	89	--
EAST SPLITTER ISLAND		--	--	--	--	--	65	--
100+00 WB - 108+36 WB	LT	--	16	--	296	--	--	--
106+16 EB - 108+36 EB	RT	--	3	--	56	--	--	--
109+89 EB - 112+07 EB	RT	--	2	--	36	--	--	--
109+92 WB - 117+46 WB	LT	--	15	--	281	2	--	5
209+09 NB - 217+04 NB	RT	20	22	59	727	30	--	5
209+11 SB - 217+04 SB	LT	11	14	37	460	15	--	--
1+13 C - 3+64 C	RT	--	7	--	130	--	--	--
STAGE 2 SUBTOTALS		31	79	96	1,986	47	268	10
STAGE 3								
100+00 EB - 106+87 EB	RT	--	12	--	227	3	5	--
110+50 EB - 117+46 EB	RT	--	11	--	201	--	--	5
STAGE 3 SUBTOTALS		--	23	--	428	3	5	5
STAGE 4								
100+00 WB - 108+36 WB	LT	13	--	44	246	--	--	--
106+16 EB - 108+36 EB	RT	3	--	8	47	--	--	--
109+89 EB - 112+07 EB	RT	2	--	5	30	--	--	--
109+92 WB - 117+46 WB	LT	13	--	42	234	--	--	--
1+13 C - 3+64 C	RT	6	--	19	108	--	--	--
100+00 EB - 106+87 EB	RT	10	--	34	189	--	--	--
110+50 EB - 117+46 EB	RT	9	--	30	167	--	--	--
EAST LEG MEDIAN OPENING		1	1	2	27	--	--	--
103+10 WB	LT	--	--	--	--	5	--	--
STAGE 4 SUBTOTALS		57	1	184	1,048	5	--	--
TOTALS		**115**	**135**	**375**	**4,630**	**90**	**980**	**20**

3

ASPHALTIC CURB ITEMS

STATION - STATION	LOCATION	465.0310 ASPHALTIC CURB LF	650.5500 CONSTRUCTION STAKING CURB, GUTTER, AND CURB & GUTTER LF
CATEGORY CODE 0010			
STAGE 1			
709+75 TW1 - CTH P	RT	185	185
STAGE 1 SUBTOTALS		185	185
TOTALS		**185**	**185**
			XX

XX QUANTITIES LISTED ELSEWHERE

3

CULVERT PIPE ITEMS

STATION	522.0118 CULVERT PIPE REINFORCED CONCRETE CLASS III 18-INCH LF	522.1018 APRON ENDWALLS FOR CULVERT PIPE REINFORCED CONCRETE 18-INCH EACH	UPSTREAM ENDWALL INVERT STATION	UPSTREAM ENDWALL INVERT ELEV	DOWNSTREAM ENDWALL INVERT STATION	DOWNSTREAM ENDWALL INVERT ELEV	650.6000 CONSTRUCTION STAKING PIPE CULVERTS EACH
CATEGORY CODE 0010							
STAGE 2							
111+65 WB, LT	22	2	111+50.1 WB, 51.6' LT	1035.12	111+82.0 WB, 41.9' LT	1034.97	1
212+70 SB, LT	24	2	212+84.3 SB, 30.6' LT	1038.02	212+47.4 ST, 31.0' LT	1037.83	1
213+65 NB, RT	46	2	213+92.6 NB, 34.7' RT	1038.29	213+34.0 NB, 33.5' RT	1038.00	1
STAGE 2 SUBTOTALS	92	6					3
TOTALS	**92**	**6**					**3**
		XX					

XX QUANTITIES LISTED ELSEWHERE

CONCRETE CURB AND GUTTER ITEMS

STATION - STATION	LOCATION	601.0405 CONCRETE CURB & GUTTER 18-INCH TYPE A LF	601.0411 CONCRETE CURB & GUTTER 30-INCH TYPE D LF	601.0553 CONCRETE CURB & GUTTER 4-INCH SLOPED 36-INCH TYPE D LF	601.0582 CONCRETE CURB & GUTTER 4-INCH SLOPED 36-INCH TYPE T LF	SPV.0090.01 CONCRETE CURB & GUTTER 4-INCH SLOPED 36-INCH TYPE D MODIFIED LF	601.0600 CONCRETE CURB PEDESTRIAN LF	650.5500 CONSTRUCTION STAKING CURB, GUTTER AND CURB & GUTTER LF
CATEGORY CODE 0010								
STAGE 1								
199+15 NB - 201+00 NB	RT	--	--	185	--	--	--	185
201+50 SB - 207+10 SB	LT	--	--	560	--	--	--	300
203+54 NB - 205+96 NB	LT	--	--	242	--	--	--	--
203+55 SB - 205+94 SB	RT	--	--	239	--	--	--	--
205+96 NB - 206+80 NB	RT	--	--	84	--	--	--	--
205+94 SB - 206+74 SB	RT	--	80	--	--	--	--	--
205+96 NB - 206+75 NB	LT	--	79	--	--	--	--	--
206+76 SB - 207+12 SB	RT	--	--	38	--	--	--	--
206+76 NB - 207+12 NB	LT	--	--	38	--	--	--	--
401+23 SW - 401+50 SW	RT	--	--	27	--	--	--	--
STAGE 1 SUBTOTALS		--	159	1,413	--	--	--	485

CONTINUED ON NEXT SHEET

CONCRETE CURB AND GUTTER ITEMS (CONTINUED)

STATION - STATION	LOCATION	601.0405 CONCRETE CURB & GUTTER 18-INCH TYPE A LF	601.0411 CONCRETE CURB & GUTTER 30-INCH TYPE D LF	601.0553 CONCRETE CURB & GUTTER 4-INCH SLOPED 36-INCH TYPE D LF	601.0582 CONCRETE CURB & GUTTER 4-INCH SLOPED 36-INCH TYPE T LF	SPV.0090.01 CONCRETE CURB & GUTTER 4-INCH SLOPED 36-INCH TYPE D MODIFIED LF	601.0600 CONCRETE CURB PEDESTRIAN LF	650.5500 CONSTRUCTION STAKING CURB, GUTTER AND CURB & GUTTER LF
CATEGORY CODE 0010								
STAGE 2								
105+17 WB - 212+30 SB	LT	--	--	684	--	--	--	180
106+98 EB - 400+26 SW	RT	--	--	26	--	--	--	--
106+60 WB - 108+26 WB	RT	--	165	--	--	--	--	--
107+62 EB - 108+28 EB	LT	--	66	--	--	--	--	--
109+89 EB - 110+41 EB	LT	--	52	--	--	--	--	--
109+90 WB - 111+35 EB	RT	--	145	--	--	--	--	--
110+78 WB - 111+85 WB	LT	--	--	107	--	--	--	--
211+20 NB - 501+43 NE	RT/LT	--	--	267	--	--	--	70
209+20 NB - 210+37 NB	LT	--	117	--	--	--	--	--
209+18 SB - 210+34 SB	RT	--	116	--	--	--	--	--
214+03 NB - 214+63 NB	LT	--	--	60	--	--	--	60
214+01 SB - 214+62 SB	RT	--	--	61	--	--	--	61
1+00 C - 4+46 C	LT	--	--	--	333	--	--	--
1+00 C - 4+46 C	LT	217	--	--	--	--	--	--
1+37 C - 1+53 C	RT	--	21	--	--	--	--	--
2+25 C - 2+40 C	RT	--	21	--	--	--	--	--
3+14 C - 3+28 C	RT	--	20	--	--	--	--	--
400+26 SW - 401+12 SW	RT	--	--	--	--	86	--	--
501+43 NE - 502+30 NE	LT	--	--	--	--	87	--	--
401+12 SW - 401+23 SW	RT	--	--	11	--	--	--	--
WEST SPLITTER ISLAND		--	--	--	--	--	39	--
EAST SPLITTER ISLAND		--	--	--	--	--	41	--
NORTH SPLITTER ISLAND		--	--	--	--	--	36	--
STAGE 2 SUBTOTALS		217	723	1,216	333	173	116	371
STAGE 3								
102+50 EB - 106+98 EB	RT	--	--	448	--	--	--	170
207+10 SB - 401+50 SW	LT/RT	--	--	74	--	--	--	--
600+00 SE - 111+00 EB	RT	--	--	247	--	--	--	--
STAGE 3 SUBTOTALS		--	--	769	--	--	--	170
STAGE 4								
102+50 WB - 105+17 WB	LT	--	--	267	--		--	170
104+26 EB - 106+62 EB	LT	--	--	236	--	--	--	--
104+26 WB - 106+60 WB	RT	--	--	234	--	--	--	--
106+62 EB - 107+62 EB	LT	--	100	--	--	--	--	--
110+41 EB - 111+37 EB	LT	--	97	--	--	--	--	--
111+22 EB - 112+09 EB	LT	--	87	--	--	--	--	--
111+39 WB - 111+87 WB	RT	--	48	--	--	--	--	--
111+89 EB - 113+90 EB	LT	--	--	204	--	--	--	--
111+91 WB - 113+91 WB	RT	--	--	201	--	--	--	--
207+12 NB - 207+57 NB	LT	--	42	--	--	--	--	--
207+12 SB - 207+56 SB	RT	--	44	--	--	--	--	--
3+97 C - 4+12 C	RT	--	20	--	--	--	--	--
SOUTH SPLITTER ISLAND		--	--	--	--	--	37	0
STAGE 4 SUBTOTALS		--	438	1,142	--	--	37	170
TOTALS		**217**	**1,320**	**4,540**	**333**	**173**	**153**	**1,196** XX

XX QUANTITIES LISTED ELSEWHERE

STORM SEWER SUMMARY

NO.	STATION	OFFSET	MANHOLES 611.2005 5-FT DIAMETER EACH	MANHOLES 611.2006 6-FT DIAMETER EACH	INLETS 611.3004 4-FT DIAMETER EACH	INLETS 611.3225 2x2.5-FT EACH	INLETS 611.3230 2x3-FT EACH	INLETS 611.3901 MEDIAN 1 GRATE EACH	APRON ENDWALLS FOR CULVERT PIPE REINFORCED CONCRETE 522.1012 12-INCH EACH	522.1015 15-INCH EACH	522.1018 18-INCH EACH	522.1024 24-INCH EACH	522.1036 36-INCH EACH	612.0806 APRON ENDWALLS FOR UNDERDRAIN REINFORCED CONCRETE 6-INCH EACH	633.5200 MARKERS CULVERT END EACH
IN11.2	105+98.50 WB	16.64 LT	---	---	---	---	1	---	---	---	---	---	---	---	---
IN11.1	105+98.50 WB	1.50 RT	---	---	---	---	1	---	---	---	---	---	---	---	---
IN11.4	106+00.00 EB	21.50 RT	---	---	---	---	1	---	---	---	---	---	---	---	---
IN11.3	106+00.00 EB	1.50 LT	---	---	---	---	1	---	---	---	---	---	---	---	---
MH11.0	106+00.00 EB	9.00 LT	1	---	---	---	---	---	---	---	---	---	---	---	---
IN10.3	107+43.96 WB	21.28 LT	---	---	---	---	1	---	---	---	---	---	---	---	---
IN10.2	107+31.71 WB	1.50 RT	---	---	---	---	1	---	---	---	---	---	---	---	---
IN10.1	107+47.11 EB	1.50 LT	---	---	---	---	1	---	---	---	---	---	---	---	---
IN10.0	107+47.11 EB	17.02 RT	---	---	1	---	---	---	---	---	---	---	---	---	---
EW9.2	108+11.8 EB	49.70 RT	---	---	---	---	---	---	---	---	1	---	---	---	1
MH9.0	108+23.23 EB	38.00 RT	1	---	---	---	---	---	---	---	---	---	---	---	---
EW8.4	206+78.1 SB	30.60 LT	---	---	---	---	---	---	---	1	---	---	---	---	1
IN8.3	207+20.00 SB	20.05 LT	---	---	---	---	1	---	---	---	---	---	---	---	---
IN8.2	207+30.00 SB	1.50 RT	---	---	---	---	1	---	---	---	---	---	---	---	---
IN8.1	207+23.78 NB	18.11 RT	---	---	---	---	1	---	---	---	---	---	---	---	---
IN8.0	207+30.00 NB	1.50 LT	---	---	1	---	---	---	---	---	---	---	---	---	---
MH7.0	207+50.17 NB	6.92 LT	1	---	---	---	---	---	---	---	---	---	---	---	---
EW6.0	1+01.50 C	59.70 RT	---	---	---	---	---	---	---	---	---	1	---	---	1
EW14.1	212+28.9 SB	29.10 LT	---	---	---	---	---	---	1	---	---	---	---	---	1
EW14.2	212+30.00 NB	31.10 RT	---	---	---	---	---	---	1	---	---	---	---	---	1
MH14.0	212+30.00 NB	8.00 LT	---	1	---	---	---	---	---	---	---	---	---	---	---
EW5.2	211+40.00 NB	52.00 LT	---	---	---	---	---	---	1	---	---	---	---	---	1
IN5.1	211+44.75 NB	34.70 LT	---	---	---	---	1	---	---	---	---	---	---	---	---
MH5.0	211+44.75 NB	8.00 LT	---	1	---	---	---	---	---	---	---	---	---	---	---
IN4.2	210+50.00 NB	33.96 RT	---	---	---	---	---	1	---	---	---	---	---	---	---
IN4.1	210+32.00 NB	2.22 LT	---	---	---	---	1	---	---	---	---	---	---	---	---
IN4.0	210+29.33 SB	2.11 RT	---	1	---	---	---	---	---	---	---	---	---	---	---
EW3.2	209+29.7 SB	45.40 LT	---	---	---	---	---	---	---	---	1	---	---	---	1
MH3.0	2+35.86 C	25.39 LT	---	1	---	---	---	---	---	---	---	---	---	---	---
IN2.2	1+58.08 C	1.50 LT	---	---	---	1	---	---	---	---	---	---	---	---	---
IN2.3	1+45.14 C	21.50 RT	---	---	---	---	1	---	---	---	---	---	---	---	---
IN2.1	1+48.08 C	1.50 LT	---	---	---	1	---	---	---	---	---	---	---	---	---
MH2.0	1+40.00 C	11.00 LT	---	1	---	---	---	---	---	---	---	---	---	---	---
EW1.0	110+16.9 EB	56.07 RT	---	---	---	---	---	---	---	---	---	---	1	---	1
IN12.3	205+50.00 NB	18.50 LT	---	---	---	---	1	---	---	---	---	---	---	---	---
IN12.2	205+50.00 SB	1.50 RT	---	---	---	---	1	---	---	---	---	---	---	---	---
IN12.1	205+50.21 NB	1.50 LT	---	---	---	---	1	---	---	---	---	---	---	---	---
EW12.0	205+50.00 NB	27.80 RT	---	---	---	---	---	---	---	1	---	---	---	---	1
IN13.2	113+88.22 WB	4.77 RT	---	---	---	---	1	---	---	---	---	---	---	---	---
IN13.1	113+88.00 EB	1.50 LT	---	---	---	---	1	---	---	---	---	---	---	---	---
EW13.0	113+88.00 EB	39.60 RT	---	---	---	---	---	---	---	1	---	---	---	---	1
IN15.1	199+77.00 NB	31.00 RT	---	---	---	---	---	1	---	---	---	---	---	---	---
EW15.0	199+09.5 NB	31.00 RT	---	---	---	---	---	---	---	---	---	---	---	1	---
	TOTALS:		3	5	2	2	18	2	3	3	2	1	1	1	10
											XX				

OFFSET IS TO CENTER OF STRUCTURE FOR MANHOLES AND INLETS OR TO END OF STRUCTURE ENDWALLS

XX QUANTITIES LISTED ELSEWHERE

STORM SEWER SUMMARY

NO.	STATION	OFFSET	MANHOLE COVERS 611.0530 TYPE J EACH	INLET COVERS 611.0624 TYPE H EACH	611.0627 TYPE HM EACH	611.0636 TYPE HM-S EACH	611.0639 TYPE H-S EACH	611.0642 TYPE MS EACH	611.0652 TYPE T EACH	650.4000 CONSTRUCTION STAKING STORM SEWER EACH	RIM OR FLANGE ELEV	FLOWLINE OF STRUCTURE	STRUCTURE DEPTH FT
IN11.2	105+98.50 WB	16.64 LT	---	---	1	---	---	---	---	1	1042.87	1038.58	3.29
IN11.1	105+98.50 WB	1.50 RT	---	---	1	---	---	---	---	1	1043.21	1038.28	3.93
IN11.4	106+00.00 EB	21.50 RT	---	---	1	---	---	---	---	1	1043.26	1038.58	3.68
IN11.3	106+00.00 EB	1.50 LT	---	---	1	---	---	---	---	1	1043.60	1038.28	4.32
MH11.0	106+00.00 EB	9.00 LT	1	---	---	---	---	---	---	1	1043.61	1038.11	4.25
IN10.3	107+43.96 WB	21.28 LT	---	---	---	1	---	---	---	1	1041.97	1037.42	3.55
IN10.2	107+31.71 WB	1.50 RT	---	---	---	---	1	---	---	1	1042.37	1037.06	4.31
IN10.1	107+47.11 EB	1.50 LT	---	---	---	---	1	---	---	1	1042.57	1036.81	4.76
IN10.0	107+47.11 EB	17.02 RT	---	---	---	---	---	---	1	1	1042.25	1036.52	4.73
EW9.2	108+11.8 EB	49.70 RT	---	---	---	---	---	---	---	1	---	1037.59	---
MH9.0	108+23.23 EB	38.00 RT	1	---	---	---	---	---	---	1	1041.60	1035.81	4.54
EW8.4	206+78.1 SB	30.60 LT	---	---	---	---	---	---	---	1	---	1040.09	---
IN8.3	207+20.00 SB	20.05 LT	---	---	---	1	---	---	---	1	1042.06	1037.34	3.72
IN8.2	207+30.00 SB	1.50 RT	---	---	---	---	1	---	---	1	1042.40	1037.00	4.40
IN8.1	207+23.78 NB	18.11 RT	---	---	---	1	---	---	---	1	1042.06	1037.00	4.06
IN8.0	207+30.00 NB	1.50 LT	---	---	---	---	1	---	---	1	1042.22	1035.91	5.31
MH7.0	207+50.17 NB	6.92 LT	1	---	---	---	---	---	---	1	1042.80	1034.65	6.90
EW6.0	1+01.50 C	59.70 RT	---	---	---	---	---	---	---	1	---	1033.91	---
EW14.1	212+28.9 SB	29.10 LT	---	---	---	---	---	---	---	1	---	1037.60	---
EW14.2	212+30.00 NB	31.10 RT	---	---	---	---	---	---	---	1	---	1037.42	---
MH14.0	212+30.00 NB	8.00 LT	1	---	---	---	---	---	---	1	1040.88	1034.70	4.93
EW5.2	211+40.00 NB	52.00 LT	---	---	---	---	---	---	---	1	---	1037.50	---
IN5.1	211+44.75 NB	34.70 LT	---	1(D)	---	---	---	---	---	1	1040.00	1034.75	4.25
MH5.0	211+44.75 NB	8.00 LT	1	---	---	---	---	---	---	1	1040.66	1034.34	5.07
IN4.2	210+50.00 NB	33.96 RT	---	---	---	---	---	1	---	1	1037.77	1034.07	2.20
IN4.1	210+32.00 NB	2.22 LT	---	1	---	---	---	---	---	1	1041.17	1034.07	6.10
IN4.0	210+29.33 SB	2.11 RT	---	1	---	---	---	---	---	1	1040.92	1033.89	6.03
EW3.2	209+29.7 SB	45.40 LT	---	---	---	---	---	---	---	1	---	1038.05	---
MH3.0	2+35.86 C	25.39 LT	1	---	---	---	---	---	---	1	1042.89	1033.46	8.18
IN2.2	1+58.08 C	1.50 LT	---	---	---	---	---	---	1	1	1041.77	1036.54	4.15
IN2.3	1+45.14 C	21.50 RT	---	---	---	---	1	---	---	1	1041.84	1036.80	3.96
IN2.1	1+48.08 C	1.50 LT	---	---	---	---	---	---	1	1	1041.76	1036.24	4.52
MH2.0	1+40.00 C	11.00 LT	1	---	---	---	---	---	---	1	1042.05	1033.07	7.73
EW1.0	110+16.9 EB	56.07 RT	---	---	---	---	---	---	---	1	---	1032.77	---
IN12.3	205+50.00 NB	18.50 LT	---	---	1	---	---	---	---	1	1045.37	1041.33	3.04
IN12.2	205+50.00 SB	1.50 RT	---	---	1	---	---	---	---	1	1045.71	1041.13	3.58
IN12.1	205+50.21 NB	1.50 LT	---	---	1	---	---	---	---	1	1045.17	1040.95	3.22
EW12.0	205+50.00 NB	27.80 RT	---	---	---	---	---	---	---	1	---	1040.80	---
IN13.2	113+88.22 WB	4.77 RT	---	---	1	---	---	---	---	1	1037.93	1033.32	3.61
IN13.1	113+88.00 EB	1.50 LT	---	---	1	---	---	---	---	1	1038.13	1033.14	3.99
EW13.0	113+88.00 EB	39.60 RT	---	---	---	---	---	---	---	1	---	1032.73	---
IN15.1	199+77.00 NB	31.00 RT	---	---	---	---	---	1	---	1	1047.34	1046.20	0.95
EW15.0	199+09.5 NB	31.00 RT	---	---	---	---	---	---	---	1	---	1045.69	---
	TOTALS:		7	3	9	3	5	2	3	43			

STRUCTURE DEPTH = RIM ELEVATION MINUS 15" FOR STRUCTURES WITH TYPE J COVERS (9" CASTING, 6" ADJUSTING)
STRUCTURE DEPTH = FLANGE ELEVATION MINUS 12" FOR STRUCTURES WITH ALL H COVER TYPES (6" CASTING, 6" ADJUSTING)
STRUCTURE DEPTH = FLANGE ELEVATION MINUS 13" FOR STRUCTURES WITH TYPE T COVERS (7" CASTING, 6" ADJUSTING)
STRUCTURE DEPTH = RIM ELEVATION MINUS 2.25" FOR STRUCTURES WITH TYPE MS COVER
OFFSET IS TO CENTER OF STRUCTURE FOR MANHOLES AND INLETS OR TO END OF STRUCTURE ENDWALLS
(D) DRIVEWAY INLET COVER

COVER PLATES TEMPORARY

LOCATION		611.8120.S EACH	STORM SEWER STRUCTURE NO.
CATEGORY CODE 0010			
STAGE 1			
108+23.23 EB	RT	1	MH9.0
207+30.00 SB	RT	1	IN8.2
207+23.78 NB	RT	1	IN8.1
207+30.00 NB	LT	1	MH8.0
207+50.17 NB	LT	1	MH7.0
STAGE 1 SUBTOTALS		5	
STAGE 2			
105+98.50 WB	RT	1	IN11.1
106+00.00 EB	LT	1	MH11.0
107+47.11 EB	LT	1	IN10.1
111+88.22 WB	RT	1	IN13.2
113+88.00 EB	LT	1	IN13.1
STAGE 2 SUBTOTALS		5	
	TOTALS	**10**	

PIPE GRATES

STATION	LOCATION	611.9800.S EACH	ENDWALL NO.
CATEGORY CODE 0010			
STAGE 2			
209+29.7 SB	LT	1	EW3.2
STAGE 2 SUBTOTAL		1	
STAGE 3			
108+08.2 EB	RT	1	EW9.2
110+16.9 EB	RT	1	EW1.0
1+01.10	RT	1	EW6.0
STAGE 3 SUBTOTAL		3	
	TOTALS	**4**	

STORM SEWER PIPE SUMMARY

FROM STRUCTURE	TO STRUCTURE	STORM SEWER PIPE REINFORCED CONCRETE CLASS III 608.0312 12-INCH LF	608.0315 15-INCH LF	608.0318 18-INCH LF	608.0324 24-INCH LF	608.0330 30-INCH LF	608.0336 36-INCH LF	607.0406 STORM SEWER PIPE COMPOSITE 6-INCH LF	COMMENTS
CATEGORY CODE 0010									
STAGE 1									
EW9.2	MH9.0	--	--	7	--	--	--	--	
MH9.0	MH7.0	--	--	--	106	--	--	--	
EW8.4	IN8.3	--	36	--	--	--	--	--	
IN8.3	IN8.2	--	24	--	--	--	--	--	
IN8.2	IN8.0	--	14	--	--	--	--	--	
IN8.1	IN8.0	--	20	--	--	--	--	--	
IN8.0	MH7.0	--	--	--	22	--	--	--	
MH7.0	EW6.0	--	--	--	68	--	--	--	
MH2.0	EW1.0	--	--	--	--	--	31	--	PORTION IN STAGE 2
IN12.3	IN12.2	--	20	--	--	--	--	--	
IN12.2	IN12.1	--	16	--	--	--	--	--	
IN12.1	EW12.0	--	23	--	--	--	--	--	
IN15.1	EW15.0	--	--	--	--	--	--	60	
STAGE 1 SUBTOTALS		--	153	7	196	--	31	60	
STAGE 2									
IN11.2	IN11.1	--	20	--	--	--	--	--	
IN11.1	MH11.0	--	7	--	--	--	--	--	
IN11.3	MH11.0	--	4	--	--	--	--	--	PORTION IN STAGE 3
MH11.0	MHIN.0	--	--	--	149	--	--	--	
IN10.3	IN10.2	--	26	--	--	--	--	--	
IN10.2	IN10.1	--	15	--	--	--	--	--	
IN10.1	IN10.0	--	19	--	--	--	--	--	
IN10.0	MH9.0	--	--	--	61	--	--	--	
EW14.1	MH14.0	31	--	--	--	--	--	--	
EW14.2	MH14.0	33	--	--	--	--	--	--	
MH14.0	MH5.0	--	--	--	--	85	--	--	
EW5.2	IN5.1	12	--	--	--	--	--	--	
IN5.1	MH5.0	--	31	--	--	--	--	--	
MH5.0	IN4.0	--	--	--	--	--	114	--	
IN4.2	IN4.1	--	40	--	--	--	--	--	
IN4.1	IN4.0	--	8	--	--	--	--	--	
IN4.0	MH3.0	--	--	--	--	--	109	--	
EW3.2	MH3.0	--	--	49	--	--	--	--	
MH3.0	MH2.0	--	--	--	--	--	98	--	
IN2.2	IN2.1	--	10	--	--	--	--	--	
IN2.3	IN2.1	--	23	--	--	--	--	--	
IN2.1	MH2.0	--	12	--	--	--	--	--	
MH2.0	EW1.0	--	--	--	--	--	60	--	PORTION IN STAGE 1
IN13.2	IN13.1	--	8	--	--	--	--	--	
STAGE 2 SUBTOTALS		76	223	49	210	85	381	--	
STAGE 3									
IN11.4	IN11.3	--	20	--	--	--	--	--	
IN11.3	MH11.0	--	3	--	--	--	--	--	PORTION IN STAGE 2
IN13.1	EW13.0	--	34	--	--	--	--	--	
STAGE 3 SUBTOTALS		--	57	--	--	--	--	--	
	TOTALS	**76**	**433**	**56**	**406**	**85**	**412**	**60**	

PIPE UNDERDRAIN ITEMS

STATION	LOCATION	612.0106 PIPE UNDERDRAIN 6-INCH LF	XX GEOTEXTILE FABRIC TYPE DF SCHEDULE A SY	COMMENTS
CATEGORY CODE 0010				
STAGE 1				
201+50 SB - 205+50 SB	LT	400	220	CONNECTS TO IN12.3
205+50 SB - 401+39 SW	LT	240	130	CONNECTS TO IN8.3
205+96 SB - 207+24 NB	RT	130	70	CONNECTS TO IN8.1
STAGE 1 SUBTOTALS		770	420	
STAGE 2				
102+50 WB - 106+00 WB	LT	350	190	CONNECTS TO IN11.2
106+00 WB - 300+72 NW	LT	270	150	CONNECTS TO IN10.3
107+00 EB - 401+39 SW	RT	150	80	CONNECTS TO MH10.0
300+72 NW - 212+29 SB	LT	350	190	CONNECTS TO IN5.1
1+00 C - 4+46 C	LT	340	190	CONNECTS TO IN2.2 AND IN2.1
STAGE 2 SUBTOTALS		1,460	800	
STAGE 3				
102+50 EB - 106+00 EB	RT	350	190	CONNECTS TO IN11.4
106+00 EB - 107+00 EB	RT	100	60	
STAGE 3 SUBTOTALS		450	250	
	TOTALS	**2,680**	**1,470**	

XX INCIDENTAL TO PIPE UNDERDRAIN 6-INCH. FOR INFORMATION ONLY

DRAIN TILE EXPLORATION

STATION	LOCATION	612.0700 LF
CATEGORY CODE 0010		
STAGE 1		
205+50 SB - 207+50 SB	LT	200
STAGE 1 SUBTOTALS		200
STAGE 3		
110+50 EB - 112+50 EB	RT	200
STAGE 3 SUBTOTALS		200
	TOTALS	**400**

3

CONCRETE MEDIAN ITEMS

STATION	LOCATION	620.0300 CONCRETE MEDIAN SLOPED NOSE SF	COMMENTS
CATEGORY CODE 0010			
STAGE 1			
203+53 NB	LT	36	TYPE 1
206+76 NB	LT	34	TYPE 1
STAGE 1 SUBTOTAL		70	
STAGE 2			
108+28 EB	LT	17	TYPE 2
108+28 WB	RT	37	TYPE 2
109+87 EB	LT	37	TYPE 2
109+88 WB	RT	17	TYPE 2
209+12 NB	LT	24	TYPE 2
209+14 SB	RT	17	TYPE 2
210+38 NB	LT	37	TYPE 1
214+00 NB	LT	33	TYPE 1
214+64 NB	LT	36	TYPE 1
STAGE 2 SUBTOTAL		255	
STAGE 4			
104+24 EB	LT	36	TYPE 1
111+37 WB	RT	31	TYPE 1
111+90 WB	RT	28	TYPE 1
113+93 EB	LT	36	TYPE 1
207+59 NB	LT	17	TYPE 2
207+59 SB	RT	37	TYPE 2
STAGE 4 SUBTOTAL		185	
	TOTAL	**510**	

LANDSCAPING ITEMS

STATION - STATION	LOCATION	625.0500 SALVAGED TOPSOIL SY	627.0200 MULCHING SY	629.0210 FERTILIZER TYPE B CWT	630.0120 SEED MIX NO. 20 LBS	630.0140 SEED MIX NO. 40 LBS	630.0200 SEED TEMPORARY LBS
CATEGORY CODE 0010							
STAGE 1							
199+00 NB - 206+80 NB	RT	1,380	1,270	1.0	35	4	42
200+00 SB - 207+00 SB	LT	760	960	0.7	17	7	28
STAGE 1 SUBTOTALS		2,140	2,230	1.7	52	11	70
STAGE 2							
105+00 WB - 217+04 SB	LT	2,090	2,380	1.7	71	--	71
217+04 NB - 114+85 WB	RT/LT	2,870	2,770	2.1	88	--	88
CIRCLE	LT	370	--	0.2	--	--	10
STAGE 2 SUBTOTALS		5,330	5,150	4.0	159	--	169
STAGE 3							
100+00 EB - 207+00 SB	RT/LT	2,400	2,820	1.9	80	--	80
206+80 NB - 117+46 EB	RT	3,160	3,130	2.2	96	--	98
STAGE 3 SUBTOTALS		5,560	5,950	4.1	176	--	178
STAGE 4							
100+00 WB - 105+00 WB	LT	1,180	1,030	1.4	59	--	59
114+85 WB - 117+46 WB	LT	890	740	0.6	24	--	24
STAGE 4 SUBTOTALS		2,070	1,770	2	83	--	83
	TOTALS	**15,100**	**15,100**	**12**	**470**	**11**	**500**

3

LANDMARK REFERENCE MONUMENTS

LOCATION	621.0100 LANDMARK REFERENCE MONUMENTS EACH
CATEGORY CODE 0010	
STAGE 2	
SECTIONS 14, 15, 22, AND 23, T10N R17E	5
TOTAL	**5**

EROSION CONTROL MOBILIZATIONS ITEMS

LOCATION	628.1905 EROSION CONTROL EACH	628.1910 EMERGENCY EROSION CONTROL EACH
CATEGORY CODE 0010		
STAGE 1	2	2
STAGE 2	2	2
STAGE 3	2	2
STAGE 4	2	1
TOTALS	**8**	**7**

SILT FENCE ITEMS

STATION - STATION	LOCATION	628.1504 SILT FENCE LF	628.1520 MAINTENANCE LF
CATEGORY CODE 0010			
STAGE 1			
702+00 TW1 - 709+50 TW1	RT	750	750
712+50 TW1 - 721+00 TW1	RT	850	850
203+50 SB - 205+75 SB	LT	200	200
UNDISTRIBUTED		300	300
STAGE 1 SUBTOTALS		2,100	2,100
STAGE 2			
801+00 TW2 - 805+00 TW2	LT	400	400
903+00 TW3 - 906+00 TW3	LT	300	300
111+80 WB - 114+80 WB	LT	300	300
213+00 SB - 217+00 SB	LT	400	400
UNDISTRIBUTED		300	300
STAGE 2 SUBTOTALS		1,700	1,700
STAGE 3			
100+00 EB - 107+00 EB	RT	600	600
112+00 EB - 117+46 EB	RT	550	550
UNDISTRIBUTED		250	250
STAGE 3 SUBTOTALS		1,400	1,400
STAGE 4			
100+00 WB - 101+50 WB	LT	150	150
114+80 WB - 117+46 WB	LT	270	270
UNDISTRIBUTED		80	80
STAGE 4 SUBTOTALS		500	500
TOTALS		**5,700**	**5,700**

EROSION MAT ITEMS

STATION - STATION	LOCATION	628.2004 CLASS 1 TYPE B SY	628.2006 URBAN CLASS 1 TYPE A SY	COMMENTS
CATEGORY CODE 0010				
STAGE 1				
199+00 NB	RT	30	--	FLUME & DITCH
199+15 NB - 201+00 NB	RT	--	110	BEHIND C&G
201+00 NB - 206+80 NB	RT	515	--	DITCH
201+50 SB - 202+15 SB	LT	--	55	BEHIND C&G
203+40 SB - 207+00 SB	LT	--	380	BEHIND C&G
205+50 SB - 207+00 SB	LT	125	--	DITCH
UNDISTRIBUTED		170	135	
STAGE 1 SUBTOTALS		840	680	
STAGE 2				
105+15 WB - 210+70 SB	LT	425	--	DITCH
105+15 WB - 210+70 SB	LT	--	525	BEHIND C&G
210+70 NB - 111+50 WB	RT/LT	180	--	DITCH
210+70 NB - 111+50 WB	RT	--	550	BEHIND C&G
112+00 WB	LT	5	--	FLUME
211+00 SB - 212+50 SB	LT	--	70	BEHIND C&G
211+25 NB - 213+15 NB	RT	160	--	DITCH
211+35 NB	RT	5	--	FLUME
211+75 SB - 212+40 SB	LT	55	--	DITCH
214+00 NB - 217+00 NB	RT	270	--	DITCH
CIRCLE		--	365	CIRCLE
UNDISTRIBUTED		270	380	
STAGE 2 SUBTOTALS		1,370	1,890	
STAGE 3				
102+50 EB - 207+00 SB	RT/LT	--	965	BEHIND C&G
107+00 EB - 207+00 SB	RT/LT	75	--	DITCH
111+15 EB	RT	5	--	FLUME
206+80 NB - 110+00 EB	RT	90	--	DITCH
206+80 NB - 111+00 EB	RT	--	570	BEHIND C&G
UNDISTRIBUTED		40	385	
STAGE 3 SUBTOTALS		210	1,920	
STAGE 4				
101+50 WB - 102+80 WB	LT	125	--	DITCH
102+50 WB - 102+80 WB	LT	--	30	BEHIND C&G
103+40 WB - 105+15 WB	LT	160	--	DITCH
103+40 WB - 105+15 WB	LT	--	365	BEHIND C&G
UNDISTRIBUTED		75	95	
STAGE 4 SUBTOTALS		360	490	
TOTALS		**2,780**	**4,980**	

INLET PROTECTION

STRUCTURE NO.	628.7005 TYPE A EA	628.7015 TYPE C EA
CATEGORY CODE 0010		
IN2.1	1	1
IN2.2	1	1
IN2.3	1	1
IN4.0	---	1
IN4.1	---	1
IN4.2	1	---
IN5.1	1	1
IN8.0	1	1
IN8.1	1	1
IN8.2	1	1
IN8.3	1	1
IN10.0	1	1
IN10.1	1	1
IN10.2	1	1
IN10.3	1	1
IN11.1	1	1
IN11.2	1	1
IN11.3	1	1
IN11.4	1	1
IN12.1	---	1
IN12.2	---	1
IN12.3	---	1
IN13.1	1	1
IN13.2	1	1
IN15.1	1	---
TOTALS	20	23

3

TEMPORARY DITCH CHECKS

STATION - STATION	LOCATION	628.7504 LF
CATEGORY CODE 0010		
STAGE 1		
207+25 NB	RT	12
UNDISTRIBUTED		48
STAGE 1 SUBTOTALS		60
STAGE 2		
110+25 WB	LT	12
UNDISTRIBUTED		48
STAGE 2 SUBTOTALS		60
STAGE 3		
UNDISTRIBUTED		48
STAGE SUBTOTALS		48
STAGE 4		
UNDISTRIBUTED		24
STAGE 4 SUBTOTALS		24
TOTALS		192

CULVERT PIPE CHECKS

STATION	LOCATION	628.7555 CULVERT PIPE CHECK EACH	COMMENTS
CATEGORY CODE 0010			
STAGE 1			
206+82.2 SB	LT	2	ENDWALL EW8.4
STAGE 1 SUBTOTALS		2	
STAGE 2			
111+50 WB	LT	2	CULVERT ENDWALL
209+29.7 SB	LT	2	ENDWALL EW3.2
211+40.0 SB	LT	1	ENDWALL EW5.2
212+28.9 SB	LT	1	ENDWALL EW 14.1
212+30.0 NB	RT	1	ENDWALL EW 14.2
212+85 SB	LT	2	CULVERT ENDWALL
213+95 NB	RT	2	CULVERT ENDWALL
STAGE 2 SUBTOTALS		11	
STAGE 3			
108+08.2 EB	RT	2	ENDWALL EW9.2
STAGE 3 SUBTOTALS		2	
	TOTAL	**15**	

3

TYPE II SIGNS AND SUPPORTS

SIGN NO.	LOCATION	SIGN CODE	SIGN MESSAGE	637.2210 SIGNS, TYPE II REFLECTIVE H W X H	637.2210 SIGNS, TYPE II REFLECTIVE H S.F.	637.2230 SIGNS, TYPE II REFLECTIVE F W X H	637.2230 SIGNS, TYPE II REFLECTIVE F S.F.	634.0614 POSTS WOOD 4x6x14 EACH	634.0616 POSTS WOOD 4x6x16 EACH	634.0618 POSTS WOOD 4x6x18 EACH	634.0620 POSTS WOOD 4x6x20 EACH	634.0812 TUBULAR STEEL POST 12 FT EACH	634.0814 TUBULAR STEEL POST 14 FT EACH	STRUCTURE ID OR MOUNTED ON SAME POST/ SIGN AS	REMARKS
	CATEGORY 0010														
300	EB STH 60, W OF CTH P	J1-1		24 x 39	6.50				1						JUNCTION ASSEMBLY
		M2-1	JCT	21 x 15	--										
		M1-5A	P	24 x 24	--										
301A	EB STH 60, W OF CTH P	W2-6				30 x 30	6.25			1					
301B	EB STH 60, W OF CTH P	W13-1	15			18 x 18	2.25							301A	
302	EB STH 60, W OF CTH P	D1-62	CTH P NORTH STH 60 EAST CTH P SOUTH	108 x 84	63.00						2				ROUNDABOUT GUIDE
303	EB STH 60, W OF CTH P	W3-2				36 x 36	9.00		1						
304	EB STH 60, W OF CTH P	D1-1	< Rubicon	60 x 15	6.25			2							DESTINATION DIRECTIONAL
305A	EB STH 60, W OF CTH P	R4-7		36 x 48	12.00				1						
305B	EB STH 60, W OF CTH P	W5-54				18 x 18	2.25							305A	MOUNT AT 4-FT
306	EB STH 60, W OF CTH P	I55-56		30 x 36	7.50				1						ADOPT A HIGHWAY - CHECK FOR CURRENT
307A	EB STH 60, W OF CTH P	R1-2		36 x 31	3.88								1		MOUNT AT 7-FT; 18"x18" FLAGS INCIDENTAL TO
307B	EB STH 60, W OF CTH P	R3-2R		24 x 30	5.00									307A	MOUNT BELOW 307A
308A	EB STH 60, W OF CTH P	R1-2		36 x 31	3.88								1		MOUNT AT 7-FT; 18"x18" FLAGS INCIDENTAL TO
308B	EB STH 60, W OF CTH P	R1-54		24 x 15	2.50									308A	MOUNT BELOW 308A
309A	EB STH 60, CENTRAL ISLAND	R6-1R		54 x 18	6.75									309B	MOUNT ABOVE 309B
309B	EB STH 60, CENTRAL ISLAND	R6-4b		60 x 24	10.00							2			MOUNT AT 4-FT
310	EB STH 60, E OF CTH P	D1-1	STH 60 EAST	42 x 30	8.75			1							ROUNDABOUT EXIT
311	EB STH 60, E OF CTH P	J4-1		24 x 36	6.00				1						REASSURANCE ASSEMBLY
		M3-2	EAST	24 x 12	--										
		M1-6	60	24 x 24	--										
312	EB STH 60, E OF CTH P	R5-1A		36 x 24	6.00			1							FACES WB
313	EB STH 60, E OF CTH P	R2-1	55	24 x 30	5.00			1							
314	EB STH 60, E OF CTH P	R5-1		36 x 36	9.00				1						FACES WB
316	WB STH 60, E OF CTH P	J1-1		24 x 39	6.50				1						JUNCTION ASSEMBLY
		M2-1	JCT	21 x 15	--										
		M1-5A	P	24 x 24	--										
317A	WB STH 60, E OF CTH P	W2-6				30 x 30	6.25			1					
317B	WB STH 60, E OF CTH P	W13-1	15			18 x 18	2.25							317A	
318	WB STH 60, E OF CTH P	D1-62	CTH P SOUTH STH 60 WEST CTH P NORTH	108 x 84	63.00						2				ROUNDABOUT GUIDE
319	WB STH 60, E OF CTH P	W3-2				36 x 36	9.00		1						
320	WB STH 60, E OF CTH P	D1-1	Rubicon >	60 x 15	6.25			2							DESTINATION DIRECTIONAL
321A	WB STH 60, E OF CTH P	R4-7		36 x 48	12.00				1						
321B	WB STH 60, E OF CTH P	W5-54				18 x 18	2.25							321A	MOUNT AT 4-FT
322A	WB STH 60, E OF CTH P	R1-2		36 x 31	3.88								1		MOUNT AT 7-FT; 18"x18" FLAGS INCIDENTAL TO
322B	WB STH 60, E OF CTH P	R3-2R		24 x 30	5.00									322A	MOUNT BELOW 322A
	SUBTOTAL				258.64		39.50	7	9	2	4	2	3		

CONTINUED ON NEXT SHEET

TYPE II SIGNS AND SUPPORTS (CONTINUED)

SIGN NO.	LOCATION	SIGN CODE	SIGN MESSAGE	637.2210 SIGNS, TYPE II REFLECTIVE H W X H	S.F.	637.2230 SIGNS, TYPE II REFLECTIVE F W X H	S.F.	634.0614 POSTS WOOD 4x6x14 EACH	634.0616 POSTS WOOD 4x6x16 EACH	634.0618 POSTS WOOD 4x6x18 EACH	634.0620 POSTS WOOD 4x6x20 EACH	634.0812 TUBULAR STEEL POST 12 FT EACH	634.0814 TUBULAR STEEL POST 14 FT EACH	STRUCTURE ID OR MOUNTED ON SAME POST/ SIGN AS	REMARKS
323A	WB STH 60, E OF CTH P	R1-2		36 x 31	3.88								1		MOUNT AT 7-FT; 18"x18" FLAGS INCIDENTAL TO
323B	WB STH 60, E OF CTH P	R1-54		24 x 15	2.50									323A	MOUNT BELOW 323A
324A	WB STH 60, CENTRAL ISLAND	R6-1R		54 x 18	6.75									324B	MOUNT ABOVE 324B
324B	WB STH 60, CENTRAL ISLAND	R6-4b		60 x 24	10.00							2			MOUNT AT 4-FT
325	WB STH 60, W OF CTH P	D1-1	STH 60 WEST	42 x 30	8.75			1							ROUNDABOUT EXIT
326	WB STH 60, W OF CTH P	J4-1		24 x 36	6.00				1						REASSURANCE ASSEMBLY
		M3-4	WEST	24 x 12	--										
		M1-6	60	24 x 24	--										
327	WB STH 60, W OF CTH P	R5-1A		36 x 24	6.00			1							FACES EB
328	WB STH 60, W OF CTH P	R2-1	55	24 x 30	5.00			1							
329A	WB STH 60, W OF CTH P	I55-56		30 x 36	7.50				1						ADOPT A HIGHWAY - CHECK FOR CURRENT
329B	WB STH 60, W OF CTH P	R5-1		36 x 36	9.00									329A	FACES EB
330	WB STH 60, W OF CTH P	W14-3				48 x 36	6.00		1						FACES EB
400	NB CTH P, S OF STH 60	J1-1		24 x 39	6.50				1						JUNCTION ASSEMBLY
		M2-1	JCT	21 x 15	--										
		M1-6	60	24 x 24	--										
401A	NB CTH P, S OF STH 60	W2-6				30 x 30	6.25			1					
401B	NB CTH P, S OF STH 60	W13-1	15			18 x 18	2.25							401A	
402	NB CTH P, S OF STH 60	J2-3		72 x 57	28.50					2					JUNCTION ASSEMBLY
		M3-4	WEST	24 x 12	--										
		M1-6	60	24 x 24	--										
		M5-1L		21 x 21	--										
		M1-5A	P	24 x 24	--										
		M6-1		21 x 21	--										
		M3-2	EAST	24 x 12	--										
		M1-6	60	24 x 24	--										
		M5-1R		21 x 21	--										
403	NB CTH P, S OF STH 60	W3-2				36 x 36	9.00		1						
404	NB CTH P, S OF STH 60	D1-3	^ Rubicon < Hustisford Hartford >	72 x 42	21.00				2						DESTINATION DIRECTIONAL
405A	NB CTH P, S OF STH 60	R4-7		36 x 48	12.00				1						
405B	NB CTH P, S OF STH 60	W5-54				18 x 18	2.25							405A	MOUNT AT 4-FT
406A	NB CTH P, S OF STH 60	R1-2		36 x 31	3.88				1						MOUNT AT 7-FT; 18"x18" FLAGS INCIDENTAL TO
406B	NB CTH P, S OF STH 60	R3-2R		24 x 30	5.00									406A	MOUNT BELOW 406A
407A	NB CTH P, S OF STH 60	R1-2		36 x 31	3.88				1						MOUNT AT 7-FT; 18"x18" FLAGS INCIDENTAL TO
407B	NB CTH P, S OF STH 60	R1-54		24 x 15	2.50									407A	MOUNT BELOW 407A
408A	NB CTH P, CENTRAL ISLAND	R6-1R		54 x 18	6.75									408B	MOUNT ABOVE 408B
408B	NB CTH P, CENTRAL ISLAND	R6-4b		60 x 24	10.00							2			MOUNT AT 4-FT
409	NB CTH P, N OF STH 60	D1-1	CTH P NORTH	42 x 30	8.75			1							ROUNDABOUT EXIT
	SUBTOTAL				174.14		25.75	4	10	3	0	4	1		

CONTINUED ON NEXT SHEET

TYPE II SIGNS AND SUPPORTS (CONTINUED)

SIGN NO.	LOCATION	SIGN CODE	SIGN MESSAGE	637.2210 SIGNS, TYPE II REFLECTIVE H W X H	637.2210 S.F.	637.2230 SIGNS, TYPE II REFLECTIVE F W X H	637.2230 S.F.	634.0614 POSTS WOOD 4x6x14 EACH	634.0616 POSTS WOOD 4x6x16 EACH	634.0618 POSTS WOOD 4x6x18 EACH	634.0620 POSTS WOOD 4x6x20 EACH	634.0812 TUBULAR STEEL POST 12 FT EACH	634.0814 TUBULAR STEEL POST 14 FT EACH	STRUCTURE ID OR MOUNTED ON SAME POST/ SIGN AS	REMARKS
410	NB CTH P, N OF STH 60	J4-1		24 x 36	6.00				1						REASSURANCE ASSEMBLY
		M3-1	NORTH	24 x 12	--										
		M1-5A	P	24 x 24	--										
411	NB CTH P, N OF STH 60	R5-1A		36 x 24	6.00			1							FACES SB
412	NB CTH P, N OF STH 60	R2-1	55	24 x 30	5.00			1							
413	NB CTH P, N OF STH 60	R5-1		36 x 36	9.00				1						FACES SB
414	SB CTH P, N OF STH 60	J1-1		24 x 39	6.50				1						JUNCTION ASSEMBLY
		M2-1	JCT	21 x 15	--										
		M1-6	60	24 x 24	--										
415A	SB CTH P, N OF STH 60	W2-6				30 x 30	6.25			1					
415B	SB CTH P, N OF STH 60	W13-1	15			18 x 18	2.25							415A	
416	NB CTH P, S OF STH 60	J2-3		72 x 57	28.50					2					JUNCTION ASSEMBLY
		M3-2	EAST	24 x 12	--										
		M1-6	60	24 x 24	--										
		M5-1L		21 x 21	--										
		M1-5A	P	24 x 24	--										
		M6-1		21 x 21	--										
		M3-4	WEST	24 x 12	--										
		M1-6	60	24 x 24	--										
		M5-1R		21 x 21	--										
417	SB CTH P, N OF STH 60	W3-2				36 x 36	9.00		1						
418	SB CTH P, N OF STH 60	D1-2	< Hartford Hustisford >	72 x 30	15.00			2							DESITINATION DIRECTIONAL
419A	SB CTH P, N OF STH 60	R4-7		36 x 48	12.00				1						
419B	SB CTH P, N OF STH 60	W5-54				18 x 18	2.25							419A	MOUNT AT 4-FT
420	SB CTH P, N OF STH 60	R4-7		36 x 48	12.00				1						FACES NB
421	SB CTH P, N OF STH 60	R4-7		36 x 48	12.00				1						
422A	SB CTH P, N OF STH 60	R1-2		36 x 31	3.88				1						MOUNT AT 7-FT; 18"x18" FLAGS INCIDENTAL TO
422B	SB CTH P, N OF STH 60	R3-2R		24 x 30	5.00									422A	MOUNT BELOW 422A
423A	SB CTH P, N OF STH 60	R1-2		36 x 31	3.88				1						MOUNT AT 7-FT; 18"x18" FLAGS INCIDENTAL TO
423B	SB CTH P, N OF STH 60	R1-54		24 x 15	2.50									423A	MOUNT BELOW 423A
424A	SB CTH P, CENTRAL ISLAND	R6-1R		54 x 18	6.75									424B	MOUNT ABOVE 424B
424B	SB CTH P, CENTRAL ISLAND	R6-4b		60 x 24	10.00							2			MOUNT AT 4-FT
425	SB CTH P, S OF STH 60	D1-1	CTH P SOUTH	42 x 30	8.75			1							ROUNDABOUT EXIT
426	SB CTH P, S OF STH 60	J4-1		24 x 36	6.00				1						REASSURANCE ASSEMBLY
		M3-3	SOUTH	24 x 12	--										
		M1-5A	P	24 x 24	--										
427A	SB CTH P, S OF STH 60	I55-56		30 x 36	7.50				1						ADOPT A HIGHWAY - CHECK FOR CURRENT
427B	SB CTH P, S OF STH 60	R5-1A		36 x 24	6.00									427A	FACES NB
428	SB CTH P, S OF STH 60	R2-1	55	24 x 30	5.00			1							
429	SB CTH P, S OF STH 60	R5-1		36 x 36	9.00				1						FACES NB
	SUBTOTAL				186.26		19.75	6	12	3	0	2	0		
			TOTALS		**619.04**		**85.00**	**17**	**31**	**8**	**4**	**8**	**4**		

3

REMOVING SIGNS AND SUPPORTS

SIGN NO.	LOCATION	638.2602 REMOVING SIGNS TYPE II EACH	638.3000 REMOVING SMALL SIGN SUPPORTS EACH	SPV.0060.01 REMOVE AND SALVAGE ADOPT A HIGHWAY SIGN EACH	MOUNTED ON SAME POST/ ASSEMBLY AS	REMARKS
100A	EB STH 60	1	1	--	--	
100B	EB STH 60	1	--	--	100A	
101	EB STH 60	1	1	--	--	
102	WB STH 60	1	1	--	--	FACES EB
103	EB STH 60	1	--	1	--	RETURN TO DODGE CO HWY DEPT
104	EB STH 60	1	2	--	--	
105A	EB STH 60	1	--	--	--	MOUNTED ON ARM
105B	EB STH 60	1	--	--	--	MOUNTED ON ARM
106A	EB STH 60	1	--	--	--	MOUNTED ON SIGNAL POLE
106B	EB STH 60	1	--	--	--	MOUNTED ON SIGNAL POLE
107A	EB STH 60	1	1	--	--	
107B	EB STH 60	1	--	--	107A	
108A	EB STH 60	1	1	--	--	
108B	EB STH 60	1	--	--	108A	
109	EB STH 60	1	1	--	--	
110A	WB STH 60	1	1	--	--	
110B	WB STH 60	1	--	--	110A	
111	WB STH 60	1	--	--	--	
112	EB STH 60	1	--	--	--	FACES WB
113	WB STH 60	1	2	--	--	
114A	WB STH 60	1	--	--	--	MOUNTED ON ARM
114B	WB STH 60	1	--	--	--	MOUNTED ON ARM
115A	WB STH 60	1	--	--	--	MOUNTED ON SIGNAL POLE
115B	WB STH 60	1	--	--	--	MOUNTED ON SIGNAL POLE
116A	WB STH 60	1	1	--	--	
116B	WB STH 60	1	--	--	116A	
117A	WB STH 60	1	1	--	--	
117B	WB STH 60	1	--	--	117A	
118	WB STH 60	1	--	1	--	RETURN TO DODGE CO HWY DEPT
119	WB STH 60	1	1	--	--	
120	WB STH 60	1	1	--	--	FACES EB
	SUBTOTAL	31	15	2		

CONTINUED

REMOVING SIGNS AND SUPPORTS (CONTINUED)

3

SIGN NO.	LOCATION	638.2602 REMOVING SIGNS TYPE II EACH	638.3000 REMOVING SMALL SIGN SUPPORTS EACH	SPV.0060.01 REMOVE AND SALVAGE ADOPT A HIGHWAY SIGN EACH	MOUNTED ON SAME POST/ ASSEMBLY AS	REMARKS
200A	NB CTH P	1	1	--	--	
200B	NB CTH P	1	--	--	200A	
201	NB CTH P	1	1	--	--	
202	SB CTH P	1	1	--	--	FACES NB
203	NB CTH P	1	1	--	--	
204A	NB CTH P	1	1	--	--	
204B	NB CTH P	1	--	--	204A	
205A	NB CTH P	1	1	--	--	
205B	NB CTH P	1	--	--	205A	
206A	NB CTH P	1	1	--	--	
206B	NB CTH P	1	--	--	206A	
207	NB CTH P	1	1	--	--	FACES EB
208A	NB CTH P	1	1	--	--	
208B	NB CTH P	1	--	--	208A	
209A	SB CTH P	1	1	--	--	
209B	SB CTH P	1	--	--	209A	
210	SB CTH P	1	1	--	--	
211	NB CTH P	1	1	--	--	FACES SB
212	SB CTH P	1	1	--	--	
213A	SB CTH P	1	1	--	--	
213B	SB CTH P	1	--	--	213A	
214A	SB CTH P	1	1	--	--	
214B	SB CTH P	1	--	--	214A	
215A	SB CTH P	1	1	--	--	
215B	SB CTH P	1	--	--	215A	
216	SB CTH P	1	1	--	--	FACES WB
217A	SB CTH P	1	1	--	--	
217B	SB CTH P	1	--	--	217A	
218	SB CTH P	1	--	1	--	RETURN TO DODGE CO HWY DEPT
	SUBTOTAL	29	18	1	--	
	TOTALS	**60**	**33**	**3**		

3

TRAFFIC CONTROL ITEMS

CATEGORY 0010		643.0300 DRUMS		643.0420 BARRICADES TYPE III		643.0500 FLEXIBLE TUBULAR MARKER POST	643.0600 FLEXIBLE TUBULAR MARKER BASE	643.0705 WARNING LIGHTS TYPE A		643.0715 WARNING LIGHTS TYPE C		643.0900 SIGNS		643.3000 DETOUR SIGNS		646.0600 REMOVING PAVEMENT MARKINGS
STAGE	**DAYS**	**NO.**	**DAYS**	**NO.**	**DAYS**	**EACH**	**EACH**	**NO.**	**DAYS**	**NO.**	**DAYS**	**NO.**	**DAYS**	**NO.**	**DAYS**	**L.F.**
STAGE 1																
WEST LEG	36	34	1,224	5	180	--	--	10	360	5	180	8	288	--	--	--
EAST LEG	36	22	792	--	--	--	--	--	--	--	--	3	108	--	--	--
SOUTH LEG	36	--	--	2	72	--	--	4	144	--	--	5	180	--	--	--
NORTH LEG	36	--	--	--	--	--	--	--	--	--	--	4	144	--	--	--
DETOUR	36	--	--	3	108	--	--	6	216	--	--	3	108	122	4,392	--
SUBTOTALS:		**56**	**2,016**	**10**	**360**	**0**	**0**	**20**	**720**	**5**	**180**	**23**	**828**	**122**	**4,392**	**0**
STAGE 2																
WEST LEG	57	77	4,389	9	513	25	25	18	1,026	1	57	24	1,368	--	--	601
EAST LEG	57	58	3,306	3	171	21	21	6	342	19	1,083	15	855	--	--	674
SOUTH LEG	57	2	114	--	--	--	--	--	--	--	--	9	513	--	--	--
NORTH LEG	57	--	--	2	114	--	--	4	228	--	--	7	399	--	--	--
DETOUR	57	--	--	2	114	--	--	4	228	--	--	2	114	111	6,327	--
SUBTOTALS:		**137**	**7,809**	**16**	**912**	**46**	**46**	**32**	**1,824**	**20**	**1,140**	**57**	**3,249**	**111**	**6,327**	**1,275**
STAGE 3																
WEST LEG	20	72	1,440	2	40	17	17	4	80	18	360	13	260	--	--	--
EAST LEG	20	30	600	1	20	18	18	2	40	5	100	12	240	--	--	--
SOUTH LEG	20	8	160	--	--	--	--	--	--	--	--	10	200	--	--	--
NORTH LEG	20	--	--	--	--	--	--	--	--	--	--	5	100	--	--	--
SUBTOTALS:		**110**	**2,200**	**3**	**60**	**35**	**35**	**6**	**120**	**23**	**460**	**40**	**800**	**0**	**0**	**0**
STAGE 4																
WEST LEG	29	54	1,566	--	--	--	--	--	--	15	435	11	319	--	--	--
EAST LEG	29	55	1,595	--	--	--	--	--	--	11	319	8	232	--	--	--
SOUTH LEG	29	--	--	--	--	--	--	--	--	--	--	5	145	--	--	--
NORTH LEG	29	--	--	--	--	--	--	--	--	--	--	5	145	--	--	--
SUBTOTALS:		**109**	**3,161**	**0**	**0**	**0**	**0**	**0**	**0**	**26**	**754**	**29**	**841**	**0**	**0**	**0**
TOTALS:		**412**	**15,186**	**29**	**1,332**	**81**	**81**	**58**	**2,664**	**74**	**2,534**	**149**	**5,718**	**233**	**10,719**	**1,275**

TRAFFIC CONTROL COVERING SIGNS TYPE II

STATION	LOCATION	643.0920 EACH
CATEGORY CODE 0010		
STAGE 1		
UNDISTRIBUTED	DETOUR ROUTE	30
STAGE 1 SUBTOTAL		30
STAGE 2		
UNDISTRIBUTED	DETOUR ROUTE	20
STAGE 2 SUBTOTAL		20
TOTAL		**50**

3

TRAFFIC CONTROL ITEMS

CATEGORY 0010	649.0200 TEMPORARY REFLECTIVE PAINT, 4-INCH		649.0400 TEMPORARY REMOVABLE TAPE, WHITE		649.1000 TEMPORARY PAV'T MARKING STOP LINE REMOVABLE TAPE, 12-INCH WHITE
STAGE	**WHITE L.F.**	**YELLOW L.F.**	**WHITE L.F.**	**YELLOW L.F.**	**L.F.**
STAGE 1					
WEST LEG	--	--	--	--	--
EAST LEG	--	--	--	--	--
SOUTH LEG	--	--	--	--	--
NORTH LEG	--	--	--	--	--
DETOUR	--	--	--	--	--
	0	**0**	**0**	**0**	
SUBTOTALS:	**0**		**0**		**0**
STAGE 2					
WEST LEG	1,860	1,656	309	467	14
EAST LEG	1,767	1,610	324	470	11
SOUTH LEG	212	--	--	--	46
NORTH LEG	--	--	--	--	--
DETOUR	--	--	--	--	--
	3,838	**3,266**	**634**	**936**	
SUBTOTALS:	**7,104**		**1,570**		**71**
STAGE 3					
WEST LEG	--	--	1,856	1,724	--
EAST LEG	--	--	1,744	1,871	--
SOUTH LEG	--	--	--	89	--
NORTH LEG	--	--	--	--	--
	0	**0**	**3,600**	**3,683**	
SUBTOTALS:	**0**		**7,283**		**0**
STAGE 4B					
WEST LEG	--	--	--	--	--
EAST LEG	--	--	--	--	--
SOUTH LEG	--	--	--	89	--
NORTH LEG	--	--	--	--	--
	0	**0**	**0**	**89**	
SUBTOTALS:	**0**		**89**		**0**
	3,838	**3,266**	**4,234**	**4,709**	
TOTALS:	**7,104**		**8,942**		**71**

CONSTRUCTION STAKING ITEMS

STATION - STATION	LOCATION	650.4500 SUBGRADE LF	650.5000 BASE LF	650.9920 SLOPE STAKES LF
CATEGORY CODE 0010				
STAGE 1				
701+19 TW1 - 721+64 TW1	RT	2,045	2,045	2,045
199+00 NB - 204+50 NB	RT	550	550	550
200+00 SB - 204+50 SB	LT	450	450	450
STAGE 1 SUBTOTALS		3,045	3,045	3,045
STAGE 2				
800+46 TW2 - 807+22 TW2	LT	676	676	676
902+25 TW3 - 906+38 TW2	LT	413	413	413
100+00 WB - 104+20 WB	LT	420	420	420
114+00 WB - 117+46 WB	LT	346	346	346
210+50 NB - 217+04 NB	RT	651	651	651
210+50 SB - 217+04 SB	LT	651	651	651
STAGE 2 SUBTOTALS		3,157	3,157	3,157
STAGE 3				
100+00 EB - 104+20 EB	RT	420	420	420
114+00 EB - 117+46 EB	RT	346	346	346
STAGE 3 SUBTOTALS		766	766	766
TOTALS		**6,968**	**6,968**	**6,968**

CONSTRUCTION STAKING ITEMS

	650.9910 SUPPLEMENTAL CONTROL LS
CATEGORY CODE 0010	
PROJECT 3042-00-73	1
TOTALS	**1**

	650.7000 ELECTRICAL INSTALLATIONS LS
CATEGORY CODE 0010	
PROJECT 3042-00-73	1
TOTALS	**1**

	SPV.0105.01 ROUNDABOUT LS
CATEGORY CODE 0010	
PROJECT 3042-00-73	1
TOTALS	**1**

3

3

PAVEMENT MARKING

STATION	TO	STATION	LOCATION	646.0106 EPOXY 4-INCH WHITE LF	646.0106 EPOXY 4-INCH YELLOW LF	646.0106 EPOXY 4-INCH YELLOW SKIPS LF	646.0126 EPOXY 8-INCH WHITE LF	647.0166 ARROWS EPOXY TYPE 2 WHITE EA	647.0456 CURB EPOXY YELLOW LF	647.0606 ISLAND NOSE EPOXY YELLOW EA	647.0726 DIAGONAL EPOXY 12-INCH YELLOW LF	646.0883.S GROOVED WET REFLECTIVE TAPE 8-INCH WHITE LF	SPV.0090.02 GROOVED PREFORMED THERMOPLASTIC 18-INCH 2-FOOT SKIP LF
BEGIN PROJECT	-	CIRCLE	WEST LEG	2,016	3,360	--	--	--	82	1	112	28	--
CIRCLE	-	END PROJECT	EAST LEG	1,642	3,074	--	--	--	163	3	91	28	--
BEGIN CONST	-	CIRCLE	SOUTH LEG	1,514	2,315	--	--	--	120	3	91	29	--
CIRCLE	-	END CONSTRUCT	NORTH LEG	1,477	2,133	200	41	4	105	3	46	29	--
2+75'C'	-	3+75'C'	CIRCLE-WEST	--	--	--	--	--	--	--	--	38	16
1+25'C'	-	2'C'	CIRCLE-EAST	--	--	--	--	--	--	--	--	38	16
3+75'C'	-	1+25'C'	CIRCLE-SOUTH	--	--	--	--	--	--	--	--	40	18
2'C'	-	2+75'C'	CIRCLE-NORTH	--	--	--	--	--	--	--	--	40	16
			TOTAL 0010	6,649	10,882	200	**41**	**4**	**470**	**10**	**340**	**270**	**66**
					17,730								

SAWING PAVEMENT ITEMS

STATION - STATION	LOCATION	690.0150 ASPHALT LF	COMMENTS
CATEGORY CODE 0010			
STAGE 1			
701+19 TW1 - 721+64 TW1	RT	2,040	ALONG STH 60 SHOULDER
199+00 NB - 200+00 SB		130	CTH P
202+25 SB	LT	15	DRIVEWAY
STAGE 1 SUBTOTALS		2,185	
STAGE 2			
801+42 TW2 - 107+26 EB	RT	905	
110+98 EB - 906+38 EB	RT	820	
110+80 WB - 211+19		270	PARKING LOT
210+00 SB	LT	35	DRIVEWAY
211+60 SB	LT	20	DRIVEWAY
213+50 NB	RT	35	DRIVEWAY
217+04 NB	RT	40	CTH P
STAGE 2 SUBTOTALS		2,125	
STAGE 3			
100+00 EB		15	STH 60
117+47 EB		15	STH 60
STAGE 3 SUBTOTALS		30	
TOTALS		**4,340**	

TEMPORARY STORM INLET GRATE

STATION	LOCATION	SPV.0060.05 EACH	COMMENTS
CATEGORY CODE 0010			
STAGE 1			
207+20.0 SB	20.05 LT	1	CONSTRUCT ABOVE IN8.3
STAGE 1 SUBTOTALS		1	
TOTALS		**1**	

CENTRAL ISLAND LANDSCAPING ITEMS

STATION	LOCATION	SPV.0165.01 WEED BARRIER SF	SPV.0165.02 ROCK MULCH SF
CATEGORY CODE 0010			
STAGE 2			
CIRCLE	1+00 C - 4+45 C LT	3300	3300
STAGE 2 SUBTOTALS		3300	3300
TOTALS		**3300**	**3300**

UTILITY LINE OPENING

STATION	SPV.0060.06 EACH	COMMENTS
CATEGORY CODE 0010		
STAGE 2		
212+20 NB	1	AT&T CROSSING CTH P
STAGE 2 SUBTOTALS	1	
TOTALS	**1**	

3

3

LIGHTING CONDUIT AND WIRE

FROM	TO	CONDUIT RIGID NONMETALLIC SCHEDULE 40 2-INCH 652.0225 LF	ELECTRICAL WIRE LIGHTING 10 AWG 655.0615 LF
L-0001	L-0002	265	831
L-0002	LPB103	10	66
LPB103	L-0003	50	310
L-0003	LPB104	50	620
LPB104	CB100	15	135
LPB104	CB100	15	135
LPB104	LPB105	35	470
LPB105	LPB106	30	546
LPB105	L-0011	275	861
LPB106	L-0004	7	152
LPB106	L-0005	60	360
L-0005	LPB107	70	410
LPB107	LPB108	35	470
LPB108	LPB109	35	376
LPB108	L-0010	275	861
LPB109	L-0006	12	312
LPB109	L-0007	60	360
L-0007	LPB110	30	210
LPB110	LPB111	80	460
LPB111	L-0009	30	336
LPB111	L-0008	50	186
L-0009	LPB101	65	--
LPB101	LPB102	30	--
LPB102	LPB103	40	--
PROJECT TOTAL		**1,624**	**8,467**

LIGHTING PULLBOXES

PULLBOX NUMBER	STATION	OFFSET	R/L	PULLBOXES STEEL 24X42-INCH 653.0140 EACH
LPB101	107+99'WB'	26.2'	LT	1
LPB102	107+92'WB'	7.3'	RT	1
LPB103	108+00'EB'	32.0'	RT	1
LPB104	207+28'SB'	26.8'	LT	1
LPB105	207+17'SB'	5.5'	RT	1
LPB106	207+11'NB'	23.8'	RT	1
LPB107	110+29'EB'	26.8'	RT	1
LPB108	110+35'EB'	7.7'	LT	1
LPB109	110+23'WB'	31.5'	RT	1
LPB110	209+19'NB'	28.2'	RT	1
LPB111	209+21'SB'	26.6'	LT	1
PROJECT TOTAL				**11**

LIGHTING CONTROL ITEMS

CABINET NUMBER	STATION	OFFSET	R/L	CONCRETE CONTROL CABINET BASE TYPE SPECIAL SPV.0060.02 EACH	LIGHTING CONTROL CABINET SPV.0060.03 EACH	ELECTRICAL SERVICE METER BREAKER PEDESTAL 656.0200.01 LS
CB100	207+28'SB'	45.3'	LT	1	1	1
PROJECT TOTAL				**1**	**1**	**1**

STREET LIGHTS

LIGHT NUMBER	STATION	OFFSET	R/L	CONCRETE BASES TYPE 6 654.0106 EACH	TRANSFORMER BASES BREAKAWAY 11 1/2-INCH BOLT CIRCLE 657.0255 EACH	POLES TYPE 6 ALUMINUM 657.0327 EACH	LUMINAIRE ARMS SINGLE MEMBER 4 1/2-INCH CLAMP 8-FT 657.0615 EACH	LUMINAIRES UTILITY LED CATEGORY A SPV.0060.04 EACH	ELECTRICAL WIRE LIGHTING 12 AWG 655.0610 EACH
L-0001	105+07'WB'	49.9'	RT	1	1	1	1	1	147
L-0002	107+84'EB'	29.1'	RT	1	1	1	1	1	147
L-0003	3'C'+67	43.1'	RT	1	1	1	1	1	147
L-0004	207+04'NB'	27.6'	RT	1	1	1	1	1	147
L-0005	4'C'+51	35.5'	RT	1	1	1	1	1	147
L-0006	110+50'WB'	31.2'	LT	1	1	1	1	1	147
L-0007	1'C'+83	34.6'	RT	1	1	1	1	1	147
L-0008	209+82'SB'	27.3'	LT	1	1	1	1	1	147
L-0009	2'C'+86	34.0'	RT	1	1	1	1	1	147
L-0010	113+22'WB'	8.7'	RT	1	1	1	1	1	147
L-0011	204+32'NB'	8.9'	RT	1	1	1	1	1	147
PROJECT TOTAL				**11**	**11**	**11**	**11**	**11**	**1617**

STATE OF WISCONSIN
DEPARTMENT OF TRANSPORTATION
TRANSPORTATION PROJECT PLAT TITLE SHEET
PROJECT 3042-00-23
LOWELL - HARTFORD ROAD
(CTH P INTERSECTION)
STH 60
DODGE COUNTY

4

CONVENTIONAL SIGNS AND ABBREVIATIONS

SECTION LINE
QUARTER LINE
SIXTEENTH LINE
NEW REFERENCE LINE
NEW R/W LINE
EXISTING R/W LINE
PROPERTY LINE
LOT, TIE AND OTHER MINOR LINES
CORPORATE LIMITS
UNDERGROUND FACILITY (COMMUNICATIONS, ELECTRIC, ETC.)
FEE ACQUISITION AREA (HATCHING VARIES BY OWNER)
TEMPORARY LIMITED EASEMENT AREA
EASEMENT (HIGHWAY, PERMANENT LIMITED OR RESTRICTED DEVELOPMENT) AREAS
TRANSMISSION STRUCTURES (LINE OPTIONAL)
BUILDING
NATIONAL GEODETIC SURVEY MONUMENT

SECTION CORNER
NOTATION FOR COMBUSTABLE FLUIDS
NOTATION FOR HIGH VOLTAGE TRANSMISSION LINES
ELECTRIC POLE
TELEPHONE POLE
PEDESTAL (LABEL TYPE - (COMMUNICATIONS, ELECTRIC)
ACCESS RESTRICTED BY ACQUISITION
NO ACCESS (BY STATUTORY AUTHORITY)
ACCESS RESTRICTED (BY PREVIOUS PROJECT/CONTROL)
BRIDGE

R/W MONUMENT
NON-MONUMENTED R/W POINT
FOUND IRON PIN
VALVE (GAS, WATER, ETC.)
SIGN
OFF-PREMISE SIGN

COMPENSABLE | NON-COMPENSABLE

PARCEL NUMBER 102
UTILITY NUMBER 92

CONVENTIONAL UTILITY SYMBOLS

WATER — W
GAS — G
TELEPHONE — T
OVERHEAD TRANSMISSION LINES — OH
ELECTRIC — E
CABLE TELEVISION — TV
FIBER OPTIC — FO
SANITARY SEWER — SAN
STORM SEWER — SS

ACCESS POINT	AP	POINT OF CURVATURE	PC
ACCESS RIGHTS	AR	POINT OF INTERSECTION	PI
ACRES	AC.	POINT OF REVERSE CURVATURE	PRC
AGRICULTURAL	AG	PRIVATE DRIVEWAY	P.D.
AHEAD	AH	POINT ON TANGENT	POT
ALUMINUM	ALUM.	PROPERTY LINE	P.L.
AND OTHERS	ET.AL.	RECORDED AS	(100')
BACK	BK	REFERENCE LINE	R/L
BLOCK	BLK	REMAINING	REM.
CENTERLINE	C/L	RIGHT	RT.
CERTIFIED SURVEY MAP	C.S.M.	RIGHT OF WAY	R/W
CONCRETE	CONC.	SECTION	SEC.
CORNER	COR.	SEPTIC VENT	SEPV.
COUNTY	CO.	SQUARE FEET	S.F.
COUNTY TRUNK HIGHWAY	CTH	STATE TRUNK HIGHWAY	STH
DISTANCE	DIST.	STATION	STA.
DOCUMENT NUMBER	DOC.	SUBDIVISION	SUBD
EASEMENT	EASE	TANGENT	TAN.
EXISTING	EX.	TELEPHONE PEDESTAL	T.P.
GAS VALVE	G.V.	TEMPORARY LIMITED EASEMENT	T.L.E.
GRID NORTH	GN	TRANSPORTATION PROJECT PLAT	TPP
HIGHWAY EASEMENT	H.E.	UNITED STATES HIGHWAY	USH
IDENTIFICATION	ID.	VOLUME	V.
LAND CONTRACT	LC	**CURVE DATA**	
LEFT	LT.	LONG CHORD	L.C.
MAGNETIC	MAG.	LONG CHORD BEARING	L.C.B.
MONUMENT	MON.	RADIUS	R.
NATIONAL GEODETIC SURVEY	NGS	DEGREE OF CURVE	D.
NUMBER	NO.	CENTRAL ANGLE OR DELTA	Δ.
OUTLOT	O.L.	LENGTH OF CURVE	L.
PAGE	P.	TANGENT	T.
PART OF	PT.	DIRECTION AHEAD	DA.
PERMANENT LIMITED EASEMENT	P.L.E.	DIRECTION BACK	DB.
POINT OF BEGINNING	P.O.B.		
POINT OF COMPOUND CURVE	PCC		

N

PROJECT LOCATION

LAYOUT SCALE

0 1 2 4

MILES

4

THE NOTES, CONVENTIONAL SIGNS, AND ABBREVIATIONS ARE ASSOCIATED WITH EACH TRANSPORTATION PROJECT PLAT FOR PROJECT 3042-00-23.

NOTES:

ALL NEW RIGHT-OF-WAY MONUMENTS WILL BE TYPE 2 (TYPICALLY ¾" X 24" IRON REBARS), UNLESS OTHERWISE NOTED, AND WILL BE PLACED PRIOR TO THE COMPLETION OF THE PROJECT.

ALL RIGHT-OF-WAY LINES DEPICTED IN NON ACQUISITION AREAS ARE INTENDED TO RE-ESTABLISH EXISTING RIGHT-OF-WAY LINES AS DETERMINED FROM PREVIOUS PROJECTS, OTHER RECORDED DOCUMENTS, OR FROM CENTERLINE OF EXISTING PAVEMENTS.

RIGHT-OF-WAY BOUNDARIES ARE DEFINED WITH COURSES OF THE PERIMETER OF THE HIGHWAY LANDS REFERENCED TO THE U.S. PUBLIC LAND SURVEY SYSTEM OR OTHER "SURVEYS OF PUBLIC RECORD".

EXISTING HIGHWAY RIGHT-OF-WAY SHOWN HEREIN IS BASED ON THE FOLLOWING POINTS OF REFERENCE: EXISTING HIGHWAY RIGHT-OF-WAY FOR STH 60 ESTABLISHED FROM PREVIOUS PROJECT 1067-1(5), HIGH POINTE SUBDIVISION, C.S.M. 399 AND C.S.M. 6232.

EXISTING HIGHWAY RIGHT-OF-WAY FOR CTH P ESTABLISHED FROM PREVIOUS PROJECTS 1067-1(5), COUNTY PROJECT 313.023, COUNTY PROJECT 313.12.32, HIGH POINTE SUBDIVISION, C.S.M. 399 AND C.S.M. 4035.

EXISTING ACCESS CONTROL ALONG STH 60 & CTH P ESTABLISHED FROM PREVIOUS PROJECT 1067-1(5), AND HIGH POINTE SUBDIVISION.

DIMENSIONING FOR THE NEW R/W IS MEASURED ALONG AND PERPENDICULAR TO NEW REFERENCE LINES.

A TEMPORARY LIMITED EASEMENT (T.L.E.) IS A RIGHT FOR CONSTRUCTION PURPOSES, AS DEFINED HEREIN, INCLUDING THE RIGHT TO OPERATE NECESSARY EQUIPMENT THEREON, THE RIGHT OF INGRESS AND EGRESS, AS LONG AS REQUIRED FOR SUCH PUBLIC PURPOSE, INCLUDING THE RIGHT TO PRESERVE, PROTECT, REMOVE OR PLANT THEREON ANY VEGETATION THAT THE HIGHWAY AUTHORITIES MAY DEEM DESIRABLE. ALL (T.L.E.s) ON THIS PLAT EXPIRE AT THE COMPLETION OF THE CONSTRUCTION PROJECT FOR WHICH THIS INSTRUMENT IS GIVEN.

A PERMANENT LIMITED EASEMENT (P.L.E.) IS A RIGHT FOR CONSTRUCTION AND MAINTENANCE PURPOSES, AS TO DEFINED HEREIN, INCLUDING THE RIGHT TO OPERATE NECESSARY EQUIPMENT THEREON AND THE RIGHT OF INGRESS AND EGRESS, AS LONG AS REQUIRED FOR SUCH PUBLIC PURPOSE, INCLUDING THE RIGHT TO PRESERVE, PROTECT, REMOVE OR PLANT THEREON ANY VEGETATION THAT THE HIGHWAY AUTHORITIES MAY DEEM DESIRABLE, BUT WITHOUT PREJUDICE TO THE OWNER'S RIGHT TO MAKE OR CONSTRUCT IMPROVEMENTS ON SAID LANDS OR TO FLATTEN THE SLOPES, PROVIDING SAID ACTIVITIES WILL NOT IMPAIR OR OTHERWISE ADVERSELY AFFECT THE HIGHWAY FACILITIES.

AN EASEMENT FOR HIGHWAY PURPOSES (H.E.), AS LONG AS SO USED, INCLUDING THE RIGHT TO PRESERVE, PROTECT, REMOVE OR PLANT THEREON ANY VEGETATION THAT THE HIGHWAY AUTHORITIES MAY DEEM DESIRABLE.

PROPERTY LINES SHOWN ON THIS PLAT ARE DRAWN FROM DATA DERIVED FROM MAPS AND DOCUMENTS OF PUBLIC RECORD AND/OR EXISTING OCCUPATIONAL LINES. THIS PLAT MAY NOT BE A TRUE REPRESENTATION OF EXISTING PROPERTY LINES, EXCLUDING RIGHT-OF-WAY LINES, AND SHOULD NOT BE USED AS A SUBSTITUTE FOR AN ACCURATE FIELD SURVEY.

FOR THE LATEST ACCESS/DRIVEWAY INFORMATION, CONTACT THE PLANNING UNIT OF THE WISCONSIN DEPARTMENT OF TRANSPORTATION OFFICE IN MADISON.

PARCEL IDENTIFICATION NUMBERS MAY NOT POINT TO ALL AREAS OF ACQUISITION, AS NOTED ON THE SCHEDULE OF LANDS & INTERESTS REQUIRED.

COORDINATES AND BEARINGS SHOWN ON THIS PLAT ARE REFERENCED TO THE WISCONSIN COUNTY COORDINATE SYSTEM, DODGE COUNTY ZONE, NAD83/2007 ADJUSTMENT. THE COORDINATES SHOWN ARE GRID COORDINATES AND ARE TO BE USED AS GRID OR GROUND VALUES ON THIS PLAT.

TPP NUMBER 3042-00-23 - 4.01
SHEET 2 OF

TRANSPORTATION PROJECT PLAT 3042-00-23 4.01 AMENDMENT NO. 2 ADDS UTILITY NUMBERS 40, 41, 42, 43 & 44 TO TRANSPORTATION PROJECT PLAT 3042-00-23 4.01 AMENDMENT NO. 1 RECORDED AS DOCUMENT NUMBER 1187938 AND FILED IN CABINET C OF PLATS, PAGE 93.

THAT PART OF PARCEL 1 & 2, CSM 399. LOCATED IN THE SE¼-SE¼ OF SECTION 15. ALSO THAT PART OF LOTS 1, 2 & 3 OF HIGH POINTE SUBDIVISION. LOCATED IN THE SW¼-SW¼ OF SECTION 14. ALSO THAT PART OF THE SE¼-SE¼ OF SECTION 15. ALSO THAT PART OF THE SW¼-SW¼ OF SECTION 14. ALSO THAT PART OF THE NW¼-NW¼ OF SECTION 23. ALSO THAT PART OF THE NE¼-NE¼ OF SECTION 22. ALL IN TOWN OF RUBICON, T 10 N, R 17 E, DODGE COUNTY, WISCONSIN.

RELOCATION ORDER STH 60 LOWELL - HARTFORD ROAD, (CTH P INTERSECTION), DODGE COUNTY

TO PROPERLY ESTABLISH, LAY OUT, WIDEN, ENLARGE, EXTEND, CONSTRUCT, RECONSTRUCT, IMPROVE, OR MAINTAIN A PORTION OF THE HIGHWAY DESIGNATED ABOVE, THE STATE OF WISCONSIN DEPARTMENT OF TRANSPORTATION DEEMS IT NECESSARY TO RELOCATE OR CHANGE SAID HIGHWAY AND ACQUIRE CERTAIN LANDS AND INTERESTS OR RIGHTS IN LANDS FOR THE ABOVE PROJECT.

TO EFFECT THIS CHANGE, PURSUANT TO AUTHORITY GRANTED UNDER SECTION 84.02 (3) AND 84.09, WISCONSIN STATUTES, THE DEPARTMENT OF TRANSPORTATION HEREBY ORDERS THAT:
1. THAT PORTION OF SAID HIGHWAY AS SHOWN ON THIS PLAT IS LAID OUT AND ESTABLISHED TO THE LINES AND WIDTHS AS SO SHOWN FOR THE ABOVE PROJECT.
2. THE LANDS OR INTERESTS OR RIGHTS IN LANDS AS SHOWN ON THIS PLAT ARE REQUIRED BY THE DEPARTMENT FOR THE ABOVE PROJECT AND SHALL BE ACQUIRED IN THE NAME OF THE STATE OF WISCONSIN, PURSUANT TO THE PROVISIONS OF SECTION 84.09 (1) OR (2), WISCONSIN STATUTES.

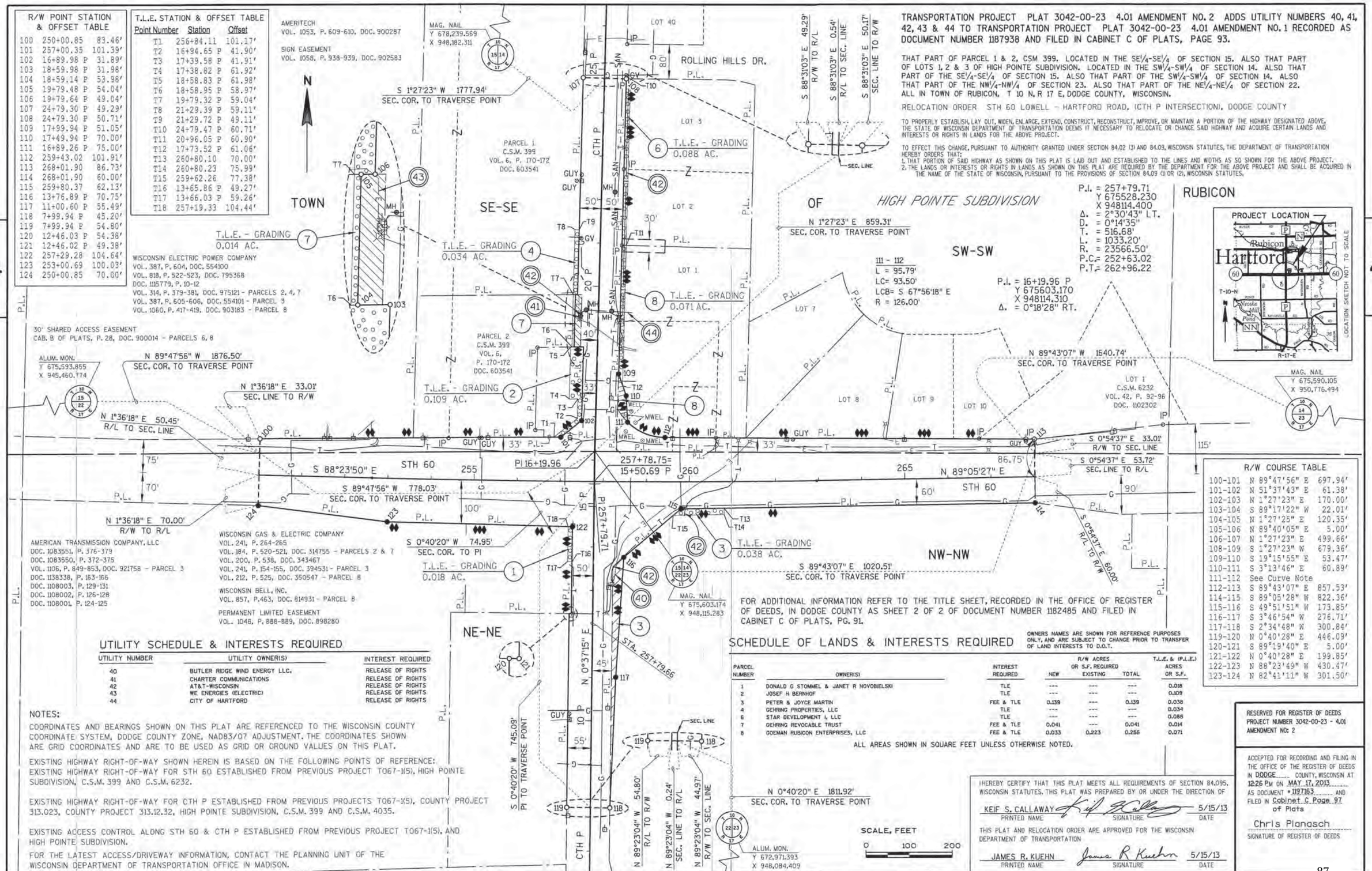

R/W POINT STATION & OFFSET TABLE		
100	250+00.85	83.46'
101	257+00.35	101.39'
102	16+89.98 P	31.89'
103	18+59.98 P	31.98'
104	18+59.14 P	53.98'
105	19+79.48 P	54.04'
106	19+79.64 P	49.04'
107	24+79.30 P	49.29'
108	24+79.30 P	50.71'
109	17+99.94 P	51.05'
110	17+49.94 P	70.00'
111	16+89.26 P	75.00'
112	259+43.02	101.91'
113	268+01.90	86.73'
114	268+01.90	60.00'
115	259+80.37	62.13'
116	13+76.89 P	70.75'
117	11+00.60 P	55.49'
118	7+99.94 P	45.20'
119	7+99.94 P	54.80'
120	12+46.03 P	54.38'
121	12+46.02 P	49.38'
122	257+29.28	104.64'
123	253+00.69	100.03'
124	250+00.85	70.00'

T.L.E. STATION & OFFSET TABLE		
Point Number	Station	Offset
T1	256+84.11	101.17'
T2	16+94.65 P	41.90'
T3	17+39.58 P	41.91'
T4	17+38.82 P	61.92'
T5	18+58.83 P	61.98'
T6	18+58.95 P	58.97'
T7	19+79.32 P	59.04'
T8	21+29.39 P	59.11'
T9	21+29.72 P	49.11'
T10	24+79.47 P	60.71'
T11	20+96.05 P	60.90'
T12	17+73.52 P	61.06'
T13	260+80.10	70.00'
T14	260+80.23	75.99'
T15	259+62.26	77.38'
T16	13+65.86 P	49.27'
T17	13+66.03 P	59.26'
T18	257+19.33	104.44'

AMERITECH
VOL. 1053, P. 609-610, DOC. 900287

SIGN EASEMENT
VOL. 1058, P. 938-939, DOC. 902583

WISCONSIN ELECTRIC POWER COMPANY
VOL. 387, P. 604, DOC. 554100
VOL. 818, P. 522-523, DOC. 795368
DOC. 1115779, P. 10-12
VOL. 314, P. 379-381, DOC. 975121 - PARCELS 2, 4, 7
VOL. 387, P. 605-606, DOC. 554101 - PARCEL 3
VOL. 1060, P. 417-419, DOC. 903183 - PARCEL 8

30' SHARED ACCESS EASEMENT
CAB. B OF PLATS, P. 28, DOC. 900014 - PARCELS 6, 8

AMERICAN TRANSMISSION COMPANY, LLC
DOC. 1083551, P. 376-379
DOC. 1083550, P. 372-375
VOL. 1106, P. 849-853, DOC. 921758 - PARCEL 3
DOC. 1138338, P. 163-166
DOC. 1108003, P. 129-131
DOC. 1108002, P. 126-128
DOC. 1108001, P. 124-125

WISCONSIN GAS & ELECTRIC COMPANY
VOL. 241, P. 264-265
VOL. 184, P. 520-521, DOC. 314755 - PARCELS 2 & 7
VOL. 200, P. 538, DOC. 343467
VOL. 241, P. 154-155, DOC. 394531 - PARCEL 3
VOL. 212, P. 525, DOC. 350547 - PARCEL 8

WISCONSIN BELL, INC.
VOL. 857, P. 463, DOC. 814931 - PARCEL 8

PERMANENT LIMITED EASEMENT
VOL. 1048, P. 888-889, DOC. 898280

FOR ADDITIONAL INFORMATION REFER TO THE TITLE SHEET, RECORDED IN THE OFFICE OF REGISTER OF DEEDS, IN DODGE COUNTY AS SHEET 2 OF 2 OF DOCUMENT NUMBER 1182485 AND FILED IN CABINET C OF PLATS, PG. 91.

UTILITY SCHEDULE & INTERESTS REQUIRED

UTILITY NUMBER	UTILITY OWNER(S)	INTEREST REQUIRED
40	BUTLER RIDGE WIND ENERGY LLC.	RELEASE OF RIGHTS
41	CHARTER COMMUNICATIONS	RELEASE OF RIGHTS
42	AT&T-WISCONSIN	RELEASE OF RIGHTS
43	WE ENERGIES (ELECTRIC)	RELEASE OF RIGHTS
44	CITY OF HARTFORD	RELEASE OF RIGHTS

SCHEDULE OF LANDS & INTERESTS REQUIRED

OWNERS NAMES ARE SHOWN FOR REFERENCE PURPOSES ONLY, AND ARE SUBJECT TO CHANGE PRIOR TO TRANSFER OF LAND INTERESTS TO D.O.T.

PARCEL NUMBER	OWNER(S)	INTEREST REQUIRED	R/W ACRES OR S.F. REQUIRED NEW	EXISTING	TOTAL	T.L.E. & (P.L.E.) ACRES OR S.F.
1	DONALD G STOMMEL & JANET R NOVOBIELSKI	TLE	---	---	---	0.018
2	JOSEF H BERNHOF	TLE	---	---	---	0.109
3	PETER & JOYCE MARTIN	FEE & TLE	0.139	---	0.139	0.038
4	GEHRING PROPERTIES, LLC	TLE	---	---	---	0.034
6	STAR DEVELOPMENT I, LLC	TLE	---	---	---	0.088
7	GEHRING REVOCABLE TRUST	FEE & TLE	0.041	---	0.041	0.014
8	GOEMAN RUBICON ENTERPRISES, LLC	FEE & TLE	0.033	0.223	0.256	0.071

ALL AREAS SHOWN IN SQUARE FEET UNLESS OTHERWISE NOTED.

R/W COURSE TABLE

100-101	N 89°47'56" E	697.94'
101-102	N 51°37'43" E	61.38'
102-103	N 1°27'23" E	170.00'
103-104	S 89°17'22" W	22.01'
104-105	N 1°27'25" E	120.35'
105-106	N 89°40'05" E	5.00'
106-107	N 1°27'23" E	499.66'
108-109	S 1°27'23" W	679.36'
109-110	S 19°15'55" E	53.47'
110-111	S 3°13'46" E	60.89'
111-112	See Curve Note	
112-113	S 89°43'07" E	857.53'
114-115	S 89°05'28" W	822.36'
115-116	S 49°51'51" W	173.85'
116-117	S 3°46'54" W	276.71'
117-118	S 2°34'48" W	300.84'
119-120	N 0°40'28" E	446.09'
120-121	S 89°19'40" E	5.00'
121-122	N 0°40'28" E	199.85'
122-123	N 88°23'49" W	430.47'
123-124	N 82°41'11" W	301.50'

NOTES:

COORDINATES AND BEARINGS SHOWN ON THIS PLAT ARE REFERENCED TO THE WISCONSIN COUNTY COORDINATE SYSTEM, DODGE COUNTY ZONE, NAD83/07 ADJUSTMENT. THE COORDINATES SHOWN ARE GRID COORDINATES AND ARE TO BE USED AS GRID OR GROUND VALUES ON THIS PLAT.

EXISTING HIGHWAY RIGHT-OF-WAY SHOWN HEREIN IS BASED ON THE FOLLOWING POINTS OF REFERENCE: EXISTING HIGHWAY RIGHT-OF-WAY FOR STH 60 ESTABLISHED FROM PREVIOUS PROJECT T067-1(5), HIGH POINTE SUBDIVISION, C.S.M. 399 AND C.S.M. 6232.

EXISTING HIGHWAY RIGHT-OF-WAY FOR CTH P ESTABLISHED FROM PREVIOUS PROJECTS T067-1(5), COUNTY PROJECT 313.023, COUNTY PROJECT 313.12.32, HIGH POINTE SUBDIVISION, C.S.M. 399 AND C.S.M. 4035.

EXISTING ACCESS CONTROL ALONG STH 60 & CTH P ESTABLISHED FROM PREVIOUS PROJECT T067-1(5), AND HIGH POINTE SUBDIVISION.

FOR THE LATEST ACCESS/DRIVEWAY INFORMATION, CONTACT THE PLANNING UNIT OF THE WISCONSIN DEPARTMENT OF TRANSPORTATION OFFICE IN MADISON.

RESERVED FOR REGISTER OF DEEDS
PROJECT NUMBER 3042-00-23 - 4.01
AMENDMENT NO: 2

I HEREBY CERTIFY THAT THIS PLAT MEETS ALL REQUIREMENTS OF SECTION 84.095, WISCONSIN STATUTES. THIS PLAT WAS PREPARED BY OR UNDER THE DIRECTION OF

KEIF S. CALLAWAY — PRINTED NAME — SIGNATURE — 5/15/13 DATE

THIS PLAT AND RELOCATION ORDER ARE APPROVED FOR THE WISCONSIN DEPARTMENT OF TRANSPORTATION

JAMES R. KUEHN — PRINTED NAME — SIGNATURE — 5/15/13 DATE

ACCEPTED FOR RECORDING AND FILING IN THE OFFICE OF THE REGISTER OF DEEDS IN DODGE COUNTY, WISCONSIN AT 12:26 PM ON MAY 17, 2013 AS DOCUMENT # 1197163 AND FILED IN Cabinet C Page 97 of Plats

Chris Planasch
SIGNATURE OF REGISTER OF DEEDS

FILE NAME : \\Mad31zp1\w3dtdd1\PDS\Support\CADDS\Projects\d1_30420003\040401A2.DGN
APPRAISAL PLAT DATE : MAY 15, 2013
PLOT DATE : 20-MAY-2013 08:02 PLOT BY : dato4c PLOT NAME : PLOT SCALE : 100.000000:1.000000
4.01A2

DATE: JULY 17, 2012

REVISION DATE

TRANSPORTATION PROJECT PLAT 3042-00-23 - 4.02

RELOCATION ORDER STH 60 LOWELL - HARTFORD ROAD
(CTH P INTERSECTION)

R/W MONUMENT POINT NUMBER AND COORDINATE TABLE

R/W MONUMENT POINT NUMBER AND COORDINATE TABLE

POINT	Y	X
100	675633.439	947338.187
101	675635.889	948036.122
102	675673.989	948084.242
103	675843.934	948088.562
104	675843.661	948066.550
105	675963.970	948069.610
106	675963.999	948074.609
107	676463.493	948087.308
108	676460.906	948187.274
109	675781.764	948170.008
110	675731.290	948187.650
111	675670.497	948191.080
112	675635.377	948277.738
113	675631.165	949135.254
114	675484.453	949137.585
115	675471.407	948315.329
116	675359.346	948182.420
117	675083.240	948164.170
118	674782.709	948150.628
119	674783.783	948050.633
120	675229.845	948055.884
121	675229.786	948060.884
122	675429.620	948063.236
123	675441.662	947632.932
124	675480.042	947333.889

R/W MONUMENT POINT NUMBER AND COORDINATE TABLE

POINT	Y	X

R/W MONUMENT POINT NUMBER AND COORDINATE TABLE

POINT	Y	X

R/W MONUMENT POINT NUMBER AND COORDINATE TABLE

POINT	Y	X

R/W MONUMENT POINT NUMBER AND COORDINATE TABLE

POINT	Y	X

R/W MONUMENT POINT NUMBER AND COORDINATE TABLE

POINT	Y	X

R/W MONUMENT POINT NUMBER AND COORDINATE TABLE

POINT	Y	X

4

4

ENCROACHMENT TABLE			
NO.	OWNER	ENCROACHMENT TYPE	PARCEL #
1	GEHRING SIEBEN LLC	SATELLITE DISH	--
2	JOSEPH BERNHOFF	MESSAGE SIGN BOARD	2
3	GOEMAN RUBICON ENTERPRISES LLC	ASPHALT PARKING LOT	8
4	GOEMAN RUBICON ENTERPRISES LLC	MESSAGE SIGN BOARD	8
5	GOEMAN RUBICON ENTERPRISES LLC	POLE GUARDRAIL	8
6	DONALD STOMMEL & JANET NOVOBIELSKI	FOOT BRIDGE	1
7	DONALD STOMMEL & JANET NOVOBIELSKI	GRAVEL DRIVEWAY	1

BENCH MARKS

NO.	STATION	DESCRIPTION	ELEV.
100	2+77.60 C, 47.89' RT	RAILROAD SPIKE IN POWER POLE	1040.47
61	107+70.28 WB, 25.15' LT	ALUMINUM REFERENCE MONUMENT	1041.11
62	110+82.71 WB, 37.52' LT	REBAR WITH RED CAP	1037.24

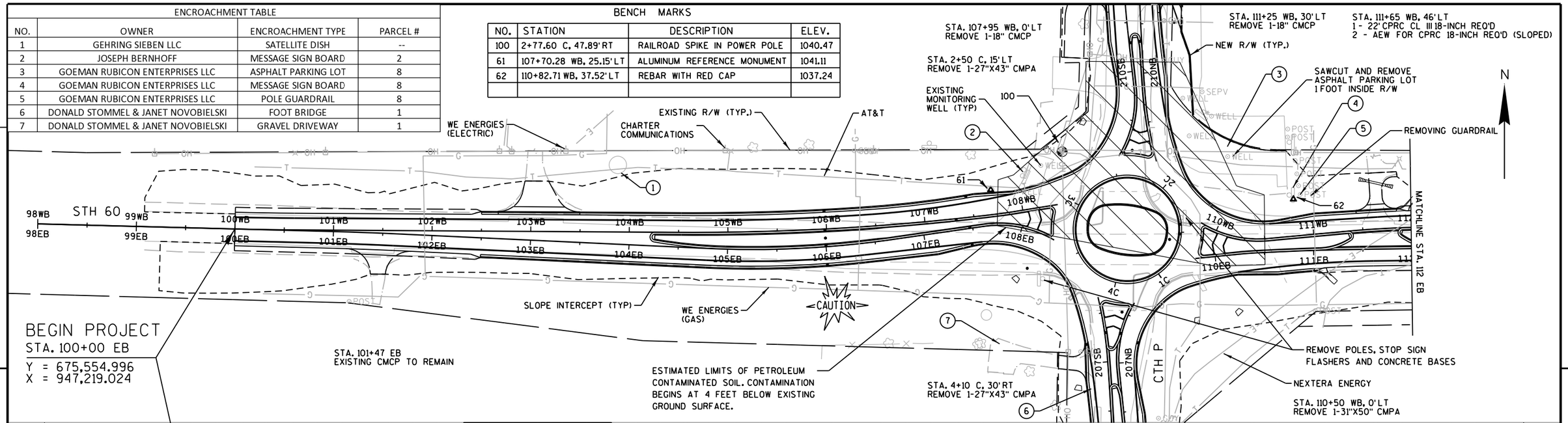

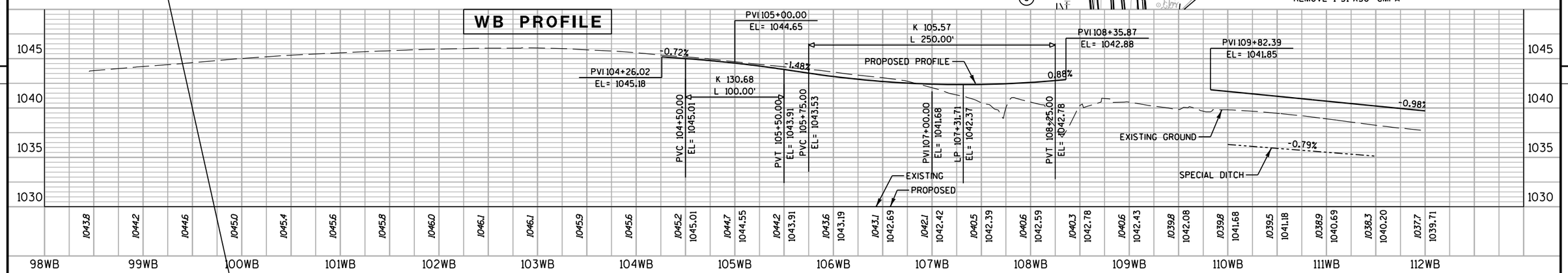

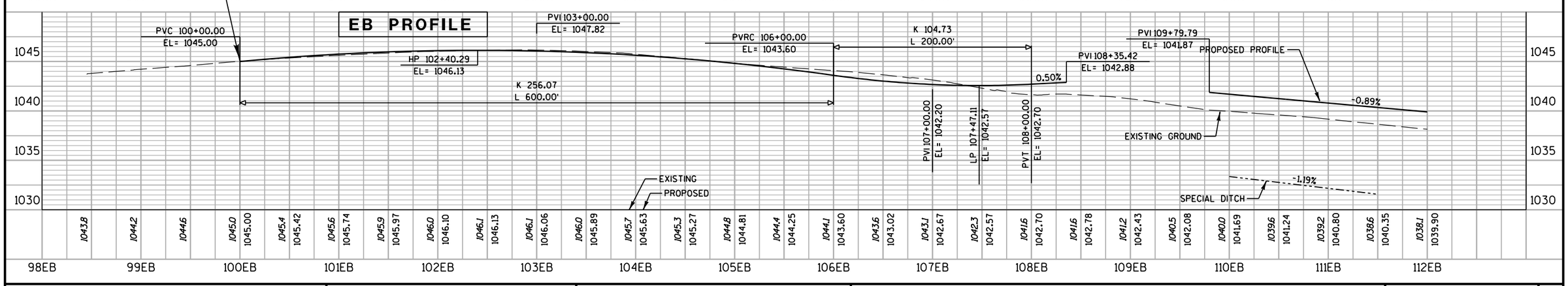

PROJECT NO: 3042-00-73	HWY: STH 60	COUNTY: DODGE	PLAN AND PROFILE - STH 60	SHEET 89	E

FILE NAME : G:\2011\11981 STH 60 & CTH P Rubicon\Micros\Plansheets\050301_pp.dgn PLOT DATE : 7/22/2013 PLOT BY : O.R.E., Inc. PLOT NAME : PLOT SCALE : 100.0000 sf / in.

WISDOT/CADDS SHEET 46

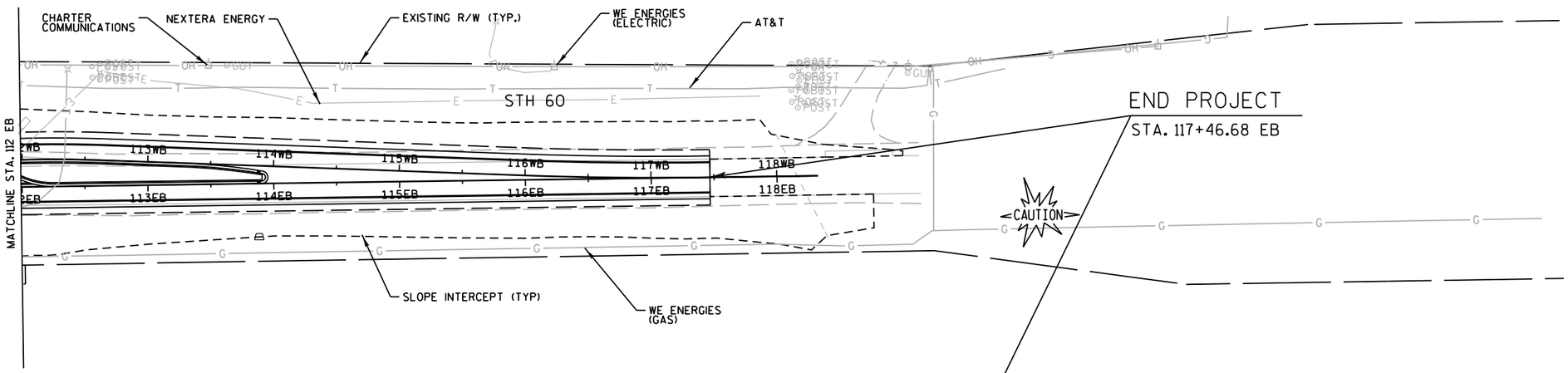

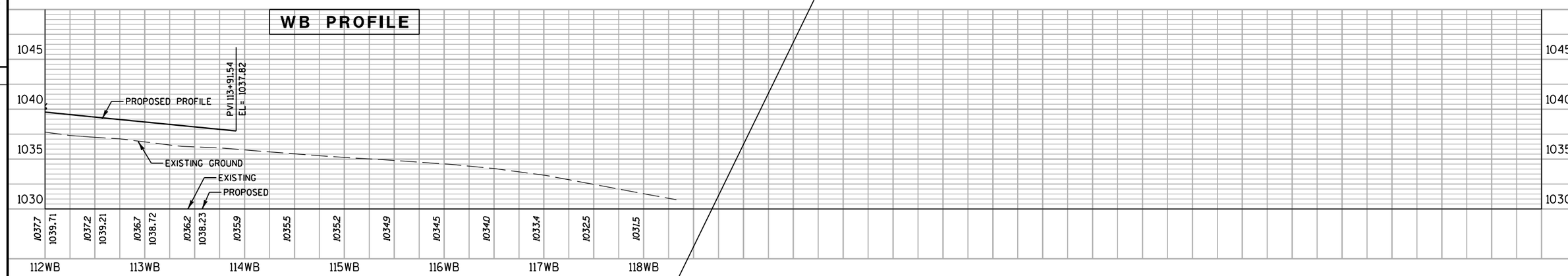

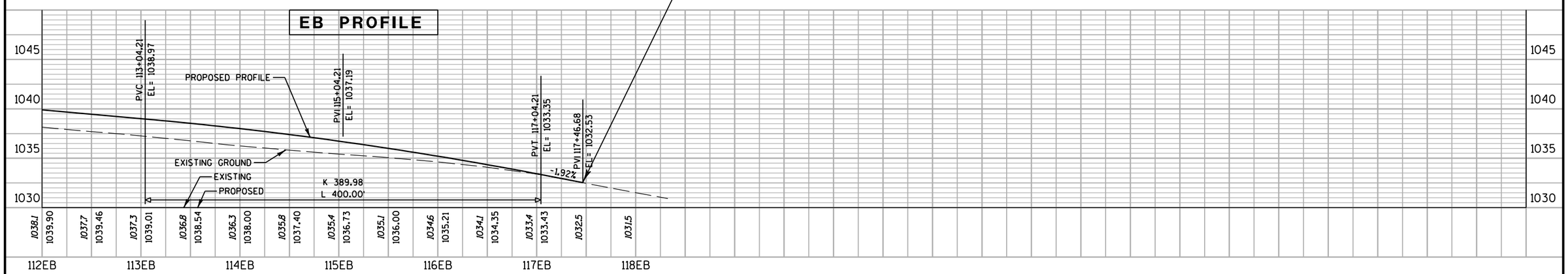

PROJECT NO:3042-00-73	HWY:STH 60	COUNTY:DODGE	PLAN AND PROFILE - STH 60	SHEET 90	E

BENCH MARKS

NO.	STATION	DESCRIPTION	ELEV.
100	2+77.60 C, 47.89' RT	RAILROAD SPIKE IN POWER POLE	1040.47
61	107+70.28 WB, 25.15' LT	ALUMINUM REFERENCE MONUMENT	1041.11
62	110+82.71 WB, 37.52' LT	REBAR WITH RED CAP	1037.24
101	211+42.78 NB, 37.63' RT	BOLT IN PAD OF PEDESTAL	1039.57

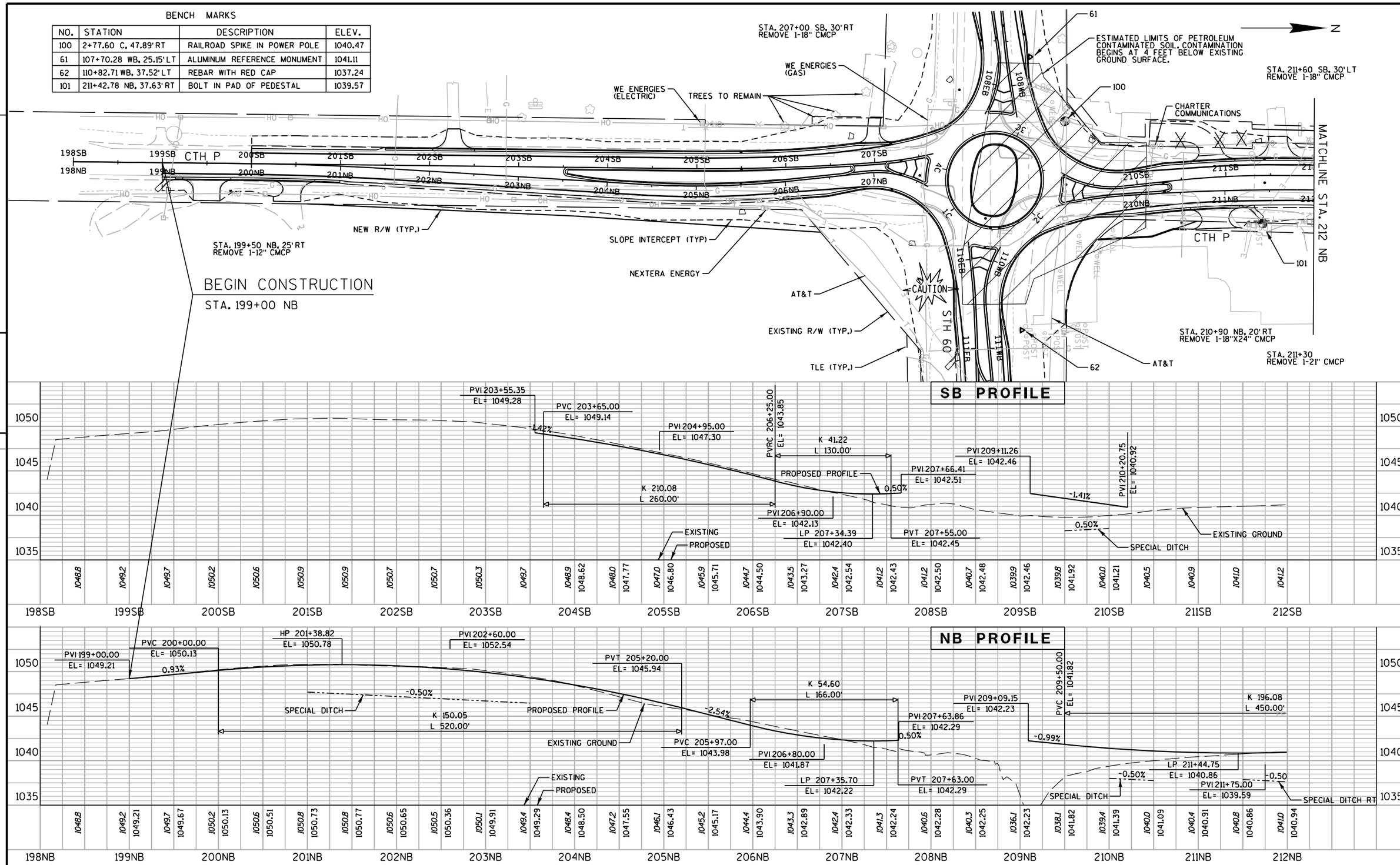

PROJECT NO: 3042-00-73	HWY: STH 60	COUNTY: DODGE	PLAN AND PROFILE - CTH P	SHEET 91	E

FILE NAME : G:\2011\11981 STH 60 & CTH P Rubicon\Micros\Plansheets\050303_pp.dgn PLOT DATE : 7/31/2013 PLOT BY : O.R.E., Inc. PLOT NAME : PLOT SCALE : 100.0000 sf / in.

WISDOT/CADDS SHEET 46

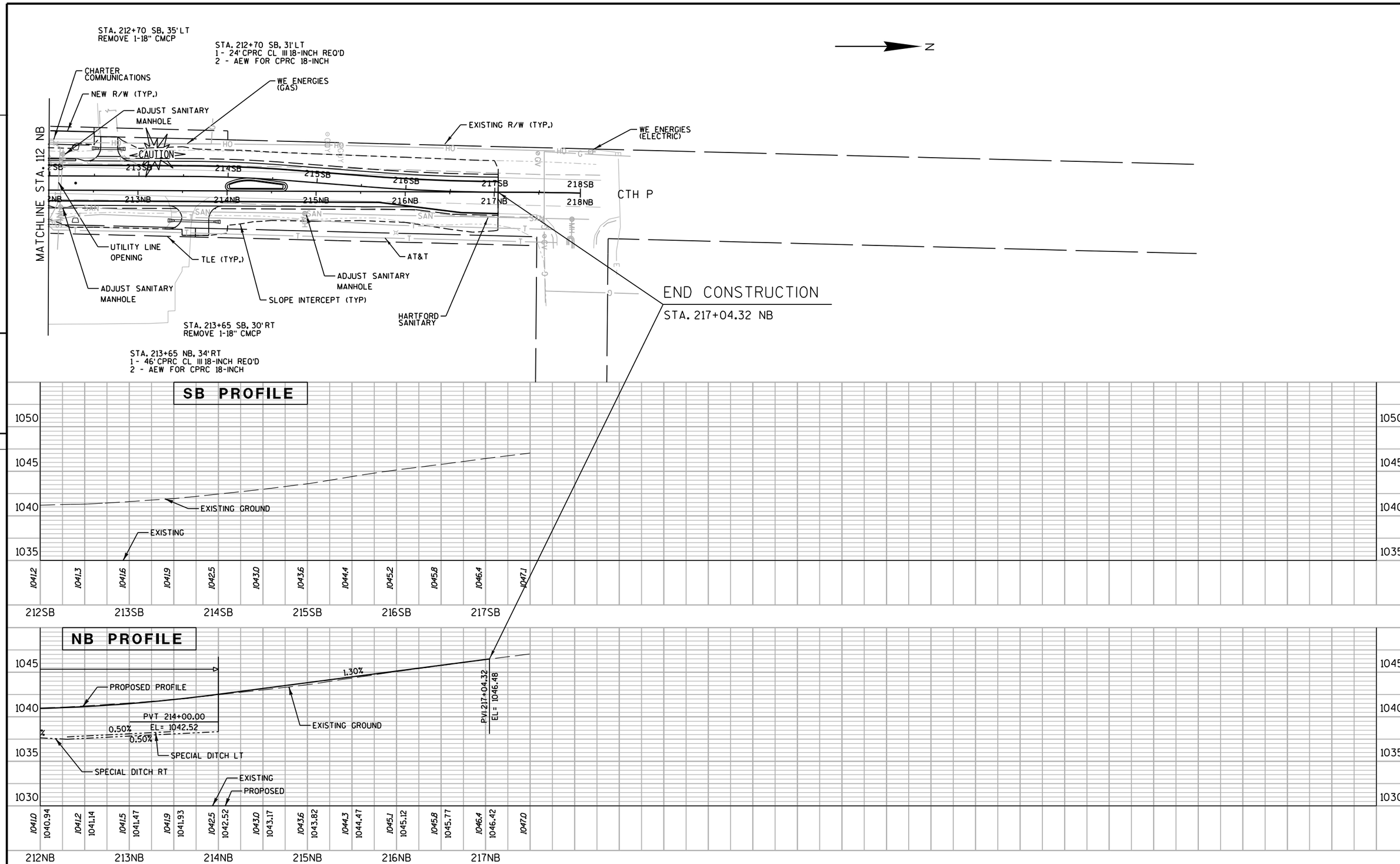

PROJECT NO:3042-00-73	HWY:STH 60	COUNTY:DODGE	PLAN AND PROFILE - CTH P	SHEET 92	E

BENCH MARKS

NO.	STATION	DESCRIPTION	ELEV.
100	2+77.60 C, 47.89' RT	RAILROAD SPIKE IN POWER POLE	1040.47
61	107+70.28 WB, 25.15' LT	ALUMINUM REFERENCE MONUMENT	1041.11
62	110+82.71 WB, 37.52' LT	REBAR WITH RED CAP	1037.24

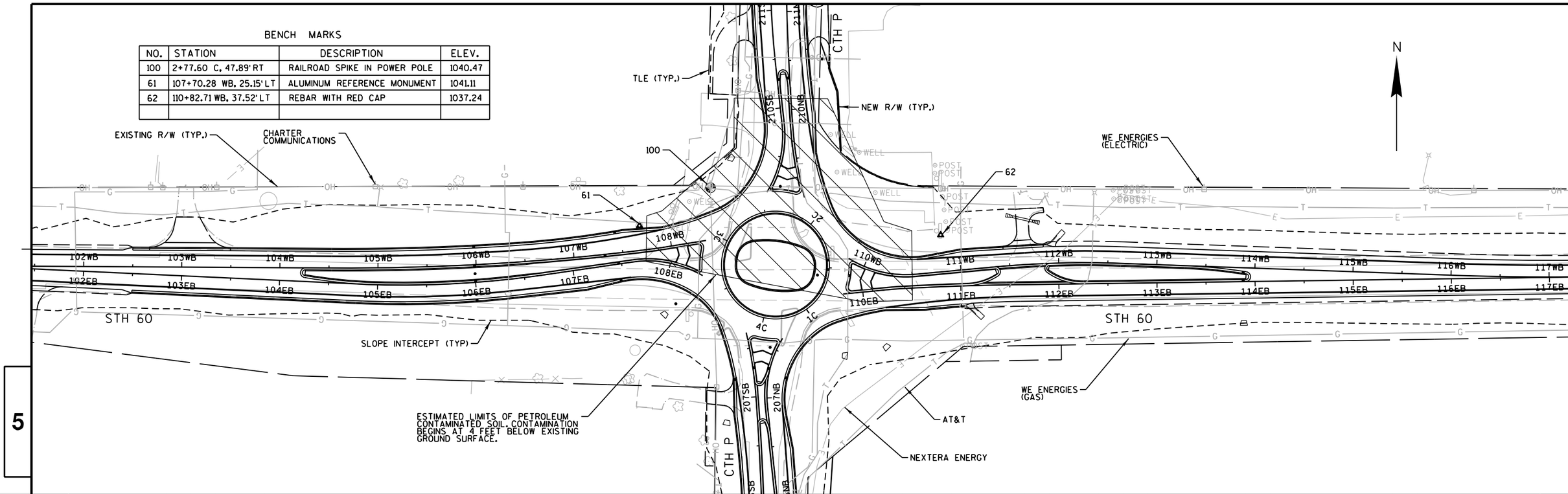

CIRCLE PROFILE

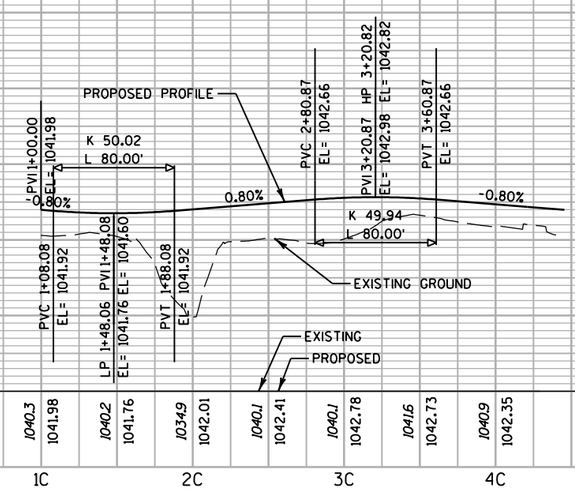

PROJECT NO:3042-00-73	HWY:STH 60	COUNTY:DODGE	PLAN AND PROFILE - CIRCLE	SHEET 93	E

BENCH MARKS

NO.	STATION	DESCRIPTION	ELEV.
100	2+77.60 C, 47.89' RT	RAILROAD SPIKE IN POWER POLE	1040.47
61	107+70.28 WB, 25.15' LT	ALUMINUM REFERENCE MONUMENT	1041.11
62	110+82.71 WB, 37.52' LT	REBAR WITH RED CAP	1037.24

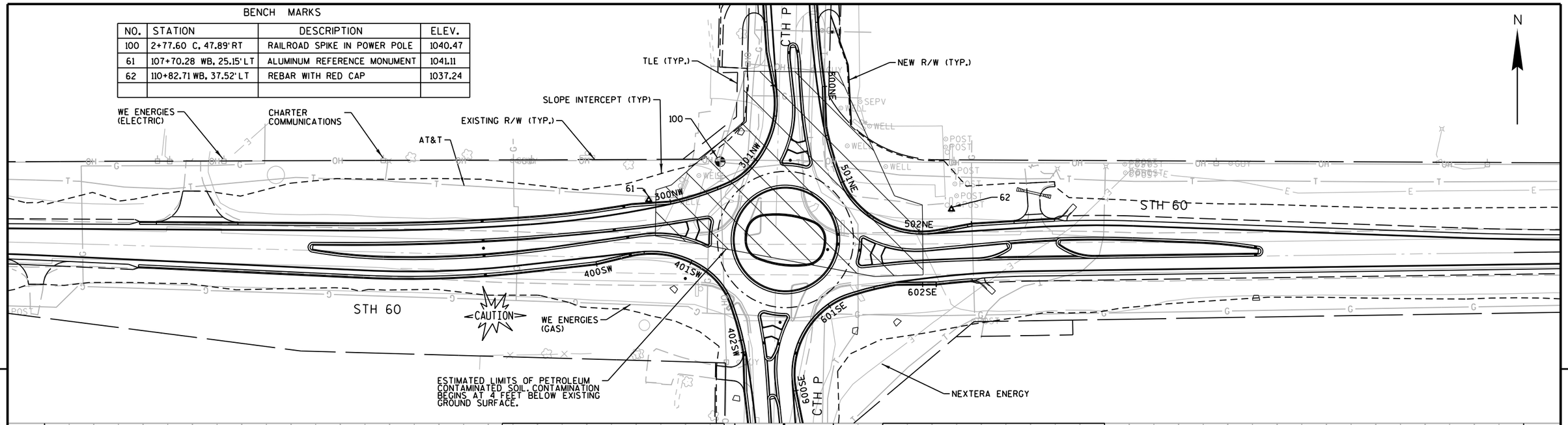

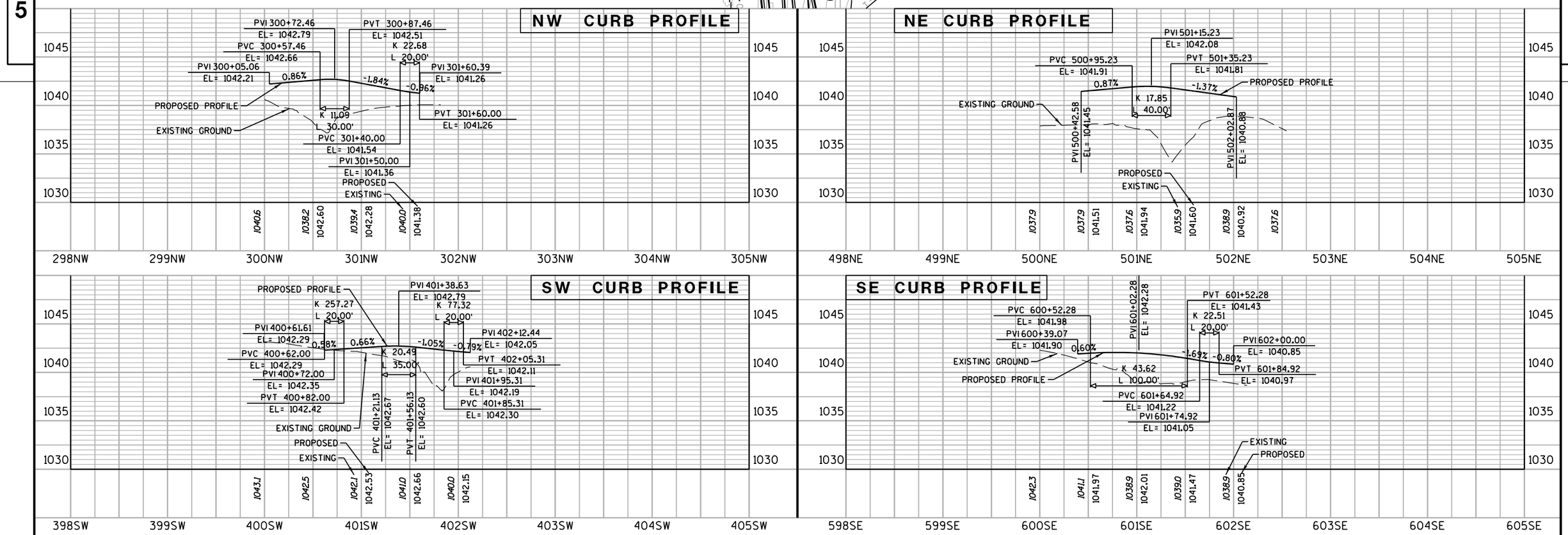

PROJECT NO: 3042-00-73	HWY: STH 60	COUNTY: DODGE	PLAN AND PROFILE - CURBS	SHEET 94	E

BENCH MARKS

NO.	STATION	DESCRIPTION	ELEV.
100	2+77.60 C, 47.89' RT	RAILROAD SPIKE IN POWER POLE	1040.47
61	107+70.28 WB, 25.15' LT	ALUMINUM REFERENCE MONUMENT	1041.11
62	110+82.71 WB, 37.52' LT	REBAR WITH RED CAP	1037.24

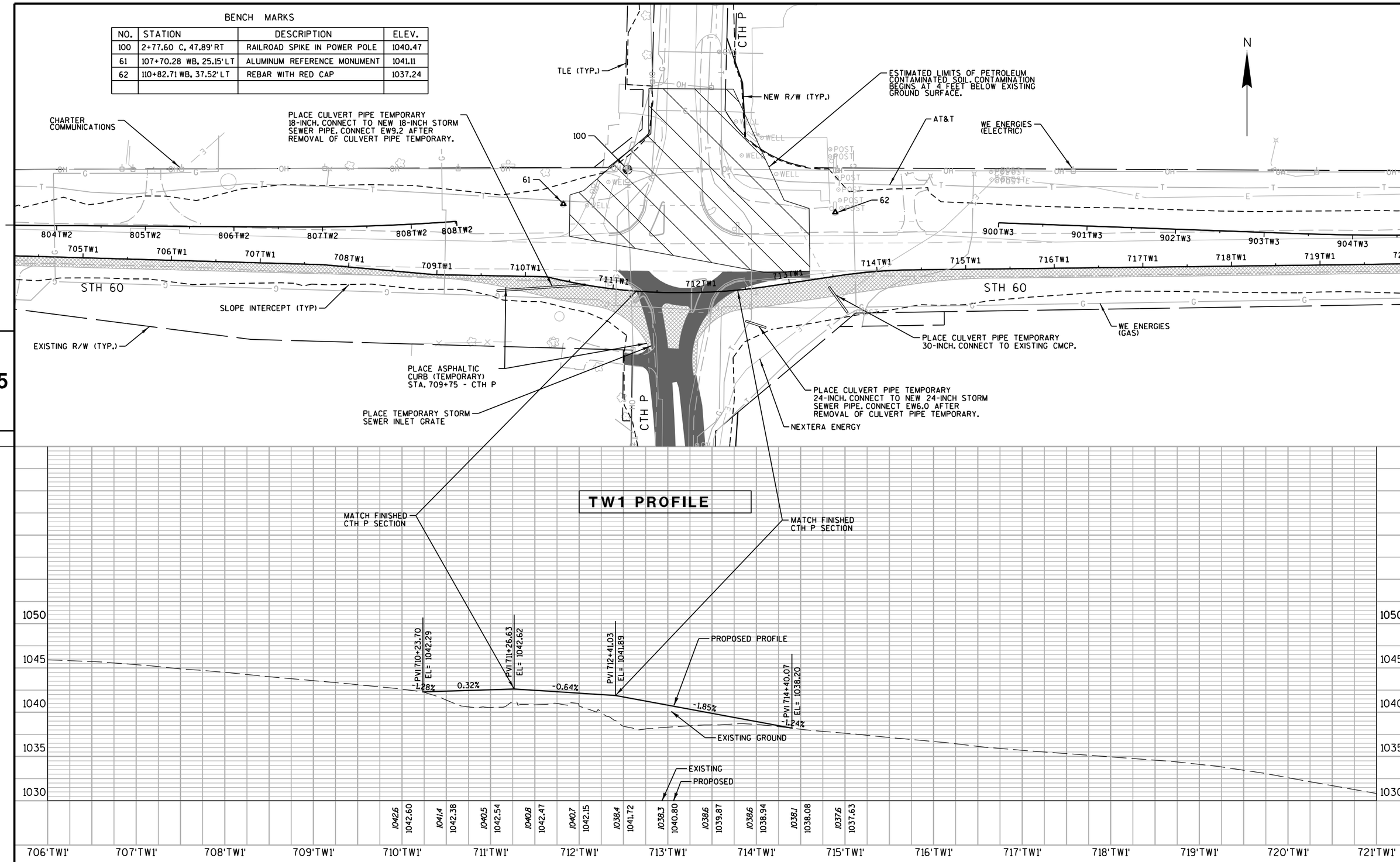

PROJECT NO: 3042-00-73	HWY: STH 60	COUNTY: DODGE	PLAN AND PROFILE - TW1	SHEET 95	E

Standard Detail Drawing List

08A05-18A	INLET COVERS TYPE A, H, A-S, & H-S
08A05-18B	INLET COVERS TYPE B, B-A, C, MS, MS-A, & WM
08A05-18C	INLET COVERS TYPE F, HM, HM-S, S, T, V, HM-GJ, & HM-GJ-S
08A05-18D	INLET COVER, TYPE BW, Z MANHOLE COVERS, TYPE K, J, J-S, L & M
08B09-01	MANHOLES 3-FT, 4-FT, 5-FT, 6-FT, 7-FT AND 8-FT DIAMETER
08C06-01	INLETS 3-FT AND 4-FT DIAMETER
08C07-01	INLETS 2X2-FT, 2X2.5-FT, 2X3-FT AND 2.5X3-FT
08C08-01	INLETS MEDIAN 1 AND 2 GRATE
08D01-17	CONCRETE CURB, CONCRETE CURB AND GUTTER AND TIES
08D04-05	CONCRETE SURFACE DRAINS & ASPHALTIC FLUMES
08D05-15A	CURB RAMPS TYPES 1 AND 1-A
08D05-15B	CURB RAMPS TYPES 2 AND 3
08D05-15C	CURB RAMPS TYPES 4A AND 4A1
08D05-15D	CURB RAMPS TYPE 4B AND 4B1
08D05-15E	CURB RAMPS TYPES 5, 6, 7A, 7B & 8
08E08-03	TYPICAL INSTALLATIONS OF EROSION BALES / TEMPORARY DITCH CHECKS
08E09-06	SILT FENCE
08E10-02	INLET PROTECTION TYPE A, B, C AND D
08F01-11	APRON ENDWALLS FOR CULVERT PIPE
08F04-07	JOINT TIES FOR CONCRETE PIPE AND CONCRETE COLLAR DETAIL
08F06-04	REINFORCED CONCRETE APRON ENDWALL FOR PIPE UNDERDRAIN
09B02-07	CONDUIT
09B04-10	PULL BOX
09C03-03	TRANSFORMER/PEDESTAL BASES
09C07-04	CONCRETE BASE, TYPE 6
09D01-04	CABINET SERVICE INSTALLATION (METER BREAKER PEDESTAL)
09E01-12E	POLE MOUNTINGS FOR LIGHTING UNITS, TYPE 6 (35 FEET)
09E01-12G	HARDWARE DETAILS FOR POLE MOUNTINGS
09E03-04	NON-FREEWAY LIGHTING UNIT POLE WIRING
11B02-02	CONCRETE MEDIAN NOSE
13C18-02E	CONCRETE PAVEMENT JOINTING AND STEEL REINFORCEMENT IN ROUNDABOUTS
15A03-02A	FLEXIBLE MARKER POST FOR CULVERT END
15A03-02B	FLEXIBLE MARKER POST FOR CULVERT END
15C02-04A	BARRICADES AND SIGNS FOR MAINLINE CLOSURES
15C02-04B	BARRICADES AND SIGNS FOR MAINLINE CLOSURES
15C02-04C	DETOUR SIGNING FOR MAINLINE CLOSURES
15C04-01	TRAFFIC CONTROL, ADVANCE WARNING SIGNS 45 M.P.H. OR GREATER TWO-WAY UNDIVIDED ROAD OPEN TO TRAFFIC
15C07-12C	PAVEMENT MARKING ARROWS
15C08-16A	PAVEMENT MARKING (MAINLINE)
15C08-16F	PAVEMENT MARKING (ISLANDS)
15C11-05	FLEXIBLE TUBULAR MARKER POST, ANCHOR & BASES
15C12-03	TRAFFIC CONTROL FOR LANE CLOSURE (SUITABLE FOR MOVING OPERATIONS)
15C18-03	MEDIAN ISLAND MARKING
15C19-02A	MOVING PAVEMENT MARKING OPERATION TWO-LANE TWO-WAY ROADWAY
15D06-02	TRAFFIC CONTROL, TWO LANE TWO WAY OPERATION
15D28-01	TRAFFIC CONTROL, WORK ON SHOULDER OR PARKING LANE, UNDIVIDED ROADWAY
16A01-06	LANDMARK REFERENCE MONUMENTS AND COVERS

6

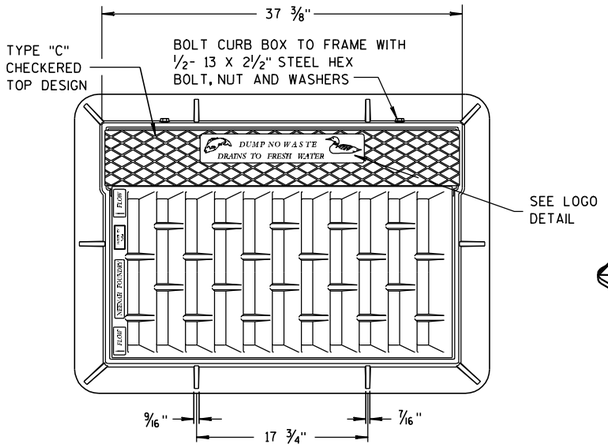

NOTE:
GRATE IS REVERSIBLE.

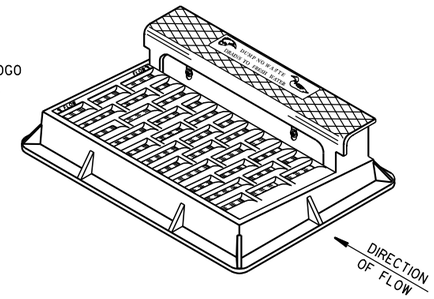

NOTE: CURB BOX HEIGHT ADJUSTABLE 6" TO 9"

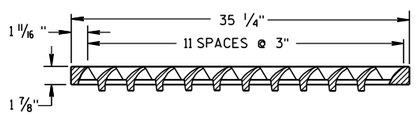

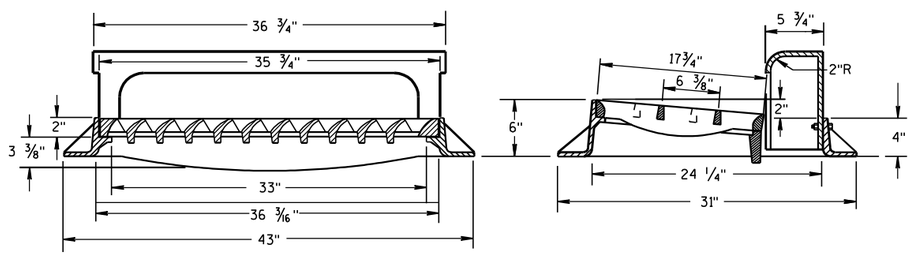

TYPE "H"

(APPROXIMATE WEIGHT 441 LBS.)
FRAME..... 181 LBS.
GRATE..... 146 LBS.
CURB BOX..... 114 LBS.

1 1/8" DIAGONAL BARS WITH 1 5/8" OPENINGS

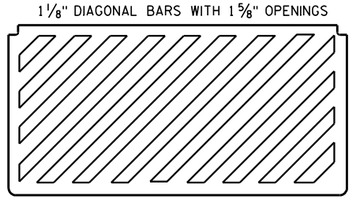

SPECIAL GRATE FOR TYPE "H" COVER

(MEASURES 35 1/4" X 17 3/4" X 2")
(APPROXIMATE WEIGHT 159 LBS.)
GRATE..... 159 LBS.

(NOTED AS TYPE H-S ON DRAINAGE TABLE)

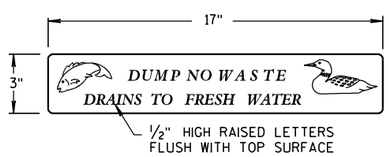

LOGO DETAIL

GENERAL NOTES

DETAILS OF CONSTRUCTION, MATERIALS AND WORKMANSHIP NOT SHOWN ON THIS DRAWING SHALL CONFORM TO THE PERTINENT REQUIREMENTS OF THE STANDARD SPECIFICATIONS AND THE APPLICABLE SPECIAL PROVISIONS.

DETAIL DRAWINGS FOR PROPOSED ALTERNATE DESIGNS FOR CATCH BASIN, MANHOLE AND INLET COVERS SHALL BE SUBMITTED TO THE ENGINEER FOR APPROVAL PROVIDING THAT SUCH ALTERNATE DESIGNS MAKE PROVISION FOR EQUIVALENT CAPACITY AND STRENGTH.

ROUND FRAMES AND COVERS SHALL HAVE CONTINUOUSLY MACHINED BEARING SURFACES TO PREVENT ROCKING AND RATTLING.

THE ACTUAL WEIGHT OF COVERS MAY VARY WITHIN 5 PERCENT, PLUS OR MINUS, OF THE APPROXIMATE WEIGHT.

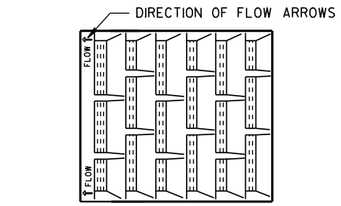

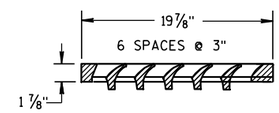

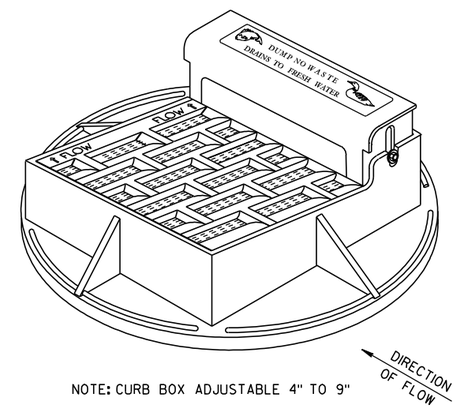

NOTE: CURB BOX ADJUSTABLE 4" TO 9"

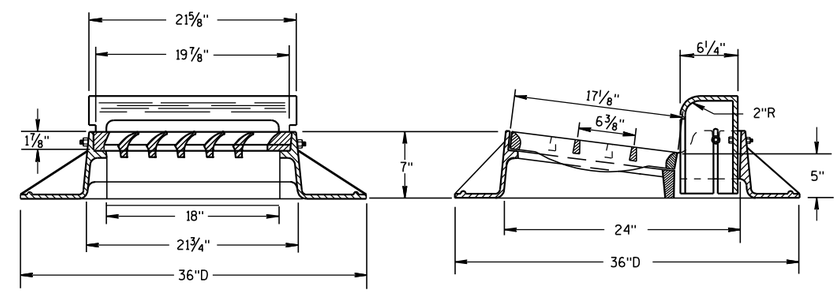

TYPE "A"

(APPROXIMATE WEIGHT 340 LBS.)
FRAME..... 185 LBS.
GRATE..... 71 LBS.
CURB BOX..... 84 LBS.

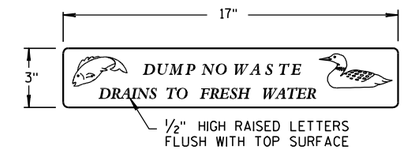

LOGO DETAIL

NOTE:
GRATE IS REVERSIBLE.

1" DIAGONAL BARS WITH 1 1/2" OPENINGS

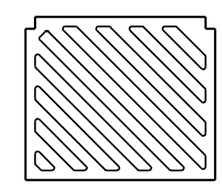

SPECIAL GRATE FOR TYPE "A" COVER

(MEASURES 19 3/4" X 17" X 1 7/8"
GRATE..... 84 LBS.

(NOTED AS TYPE A-S ON DRAINAGE TABLE)

INLET COVERS
TYPE A, H, A-S, & H-S

STATE OF WISCONSIN
DEPARTMENT OF TRANSPORTATION

APPROVED
6/5/2012 — DATE
/S/ Jerry H. Zogg — ROADWAY STANDARDS ENGINEER
FHWA

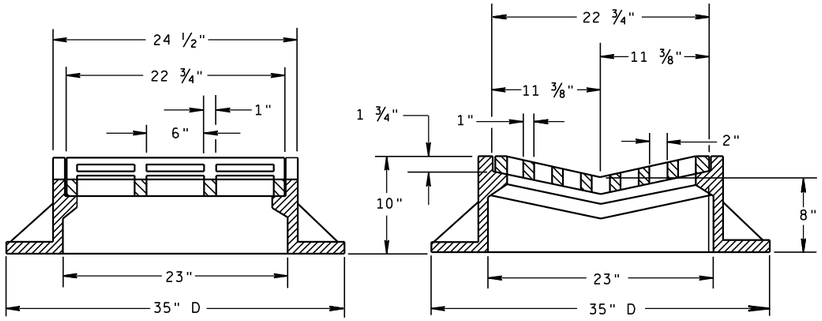

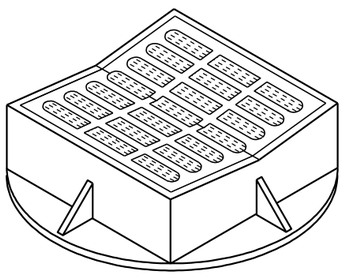

TYPE "B"

(APPROXIMATE WEIGHT 405 LBS.)

FRAME..... 294 LBS.
GRATE..... 111 LBS.

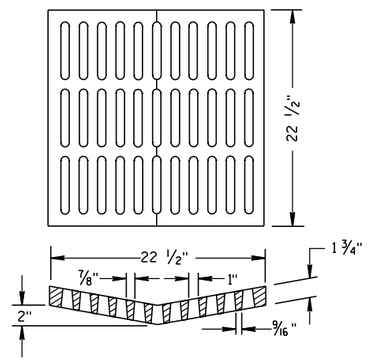

ALTERNATIVE GRATE FOR TYPE "B" COVER

(APPROXIMATE GRATE WEIGHT 134 LBS.)

USE WHERE PEDESTRIAN OR BICYCLE TRAFFIC IS POSSIBLE.

NOTED AS TYPE B-A ON THE DRAINAGE TABLE

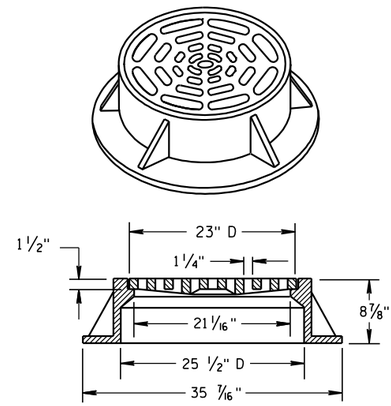

TYPE "C"

(APPROXIMATE WEIGHT 259 LBS.)

FRAME..... 152 LBS.
GRATE..... 107 LBS.

GENERAL NOTES

DETAILS OF CONSTRUCTION, MATERIALS AND WORKMANSHIP NOT SHOWN ON THIS DRAWING SHALL CONFORM TO THE PERTINENT REQUIREMENTS OF THE STANDARD SPECIFICATIONS AND THE APPLICABLE SPECIAL PROVISIONS.

DETAIL DRAWINGS FOR PROPOSED ALTERNATE DESIGNS FOR CATCH BASIN, MANHOLE AND INLET COVERS SHALL BE SUBMITTED TO THE ENGINEER FOR APPROVAL PROVIDING THAT SUCH ALTERNATE DESIGNS MAKE PROVISION FOR EQUIVALENT CAPACITY AND STRENGTH.

ROUND FRAMES AND COVERS SHALL HAVE CONTINUOUSLY MACHINED BEARING SURFACES TO PREVENT ROCKING AND RATTLING.

THE ACTUAL WEIGHT OF COVERS MAY VARY WITHIN 5 PERCENT, PLUS OR MINUS, OF THE APPROXIMATE WEIGHT.

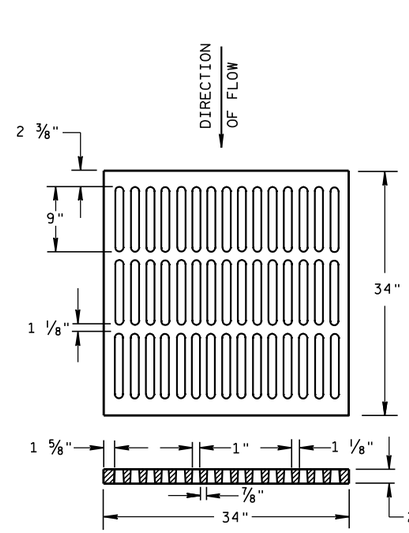

ALTERNATIVE TYPE "MS"

(APPROXIMATE GRATE WEIGHT 329 LBS.)

USE WHERE PEDESTRIAN OR BICYCLE TRAFFIC IS PERMITTED

NOTED AS TYPE MS-A ON THE DRAINAGE TABLE

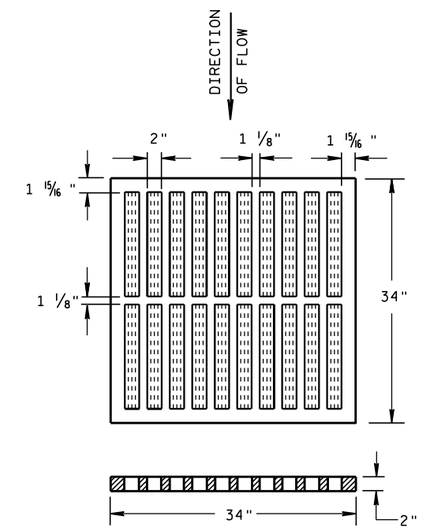

TYPE "MS"

(APPROXIMATE GRATE WEIGHT 268 LBS.)

USE ON FREEWAYS AND EXPRESSWAYS

NOTED AS TYPE MS ON DRAINAGE TABLE

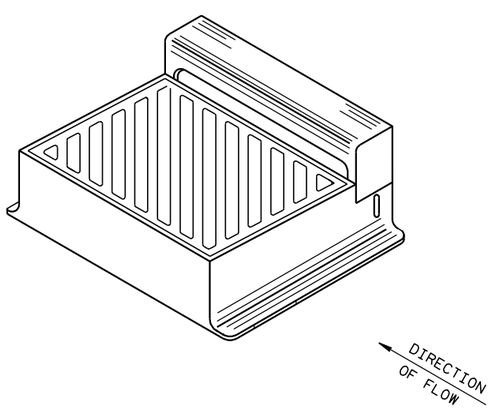

DIAGONAL SLOTS, SHALL BE ORIENTED TO THE DIRECTION OF FLOW AS ILLUSTRATED. GRATES ARE MANUFACTURED TO BE REVERSIBLE.

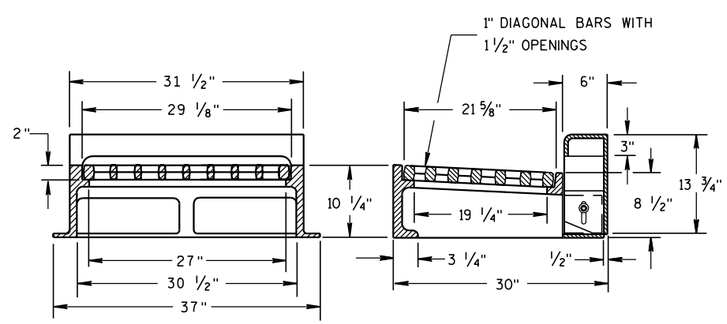

NOTE: CURB BOX HEIGHT ADJUSTABLE 6" TO 9"

TYPE "WM"

(APPROXIMATE WEIGHT 648 LBS.)

FRAME..... 355 LBS.
GRATE..... 156 LBS.
CURB BOX..... 137 LBS.

INLET COVERS
TYPE B, B-A, C, MS, MS-A, & WM

STATE OF WISCONSIN
DEPARTMENT OF TRANSPORTATION

APPROVED

6/5/2012 — DATE

/S/ Jerry H. Zogg — ROADWAY STANDARDS ENGINEER

98

ENT

FHWA

GENERAL NOTES

DETAILS OF CONSTRUCTION, MATERIALS AND WORKMANSHIP NOT SHOWN ON THIS DRAWING SHALL CONFORM TO THE PERTINENT REQUIREMENTS OF THE STANDARD SPECIFICATIONS AND THE APPLICABLE SPECIAL PROVISIONS.

DETAIL DRAWINGS FOR PROPOSED ALTERNATE DESIGNS FOR INLET COVERS SHALL BE SUBMITTED TO THE ENGINEER FOR APPROVAL PROVIDING THAT SUCH ALTERNATE DESIGNS MAKE PROVISION FOR EQUIVALENT CAPACITY AND STRENGTH.

THE ACTUAL WEIGHT OF COVERS MAY VARY WITHIN 5 PERCENT, PLUS OR MINUS, OF THE APPROXIMATE WEIGHT.

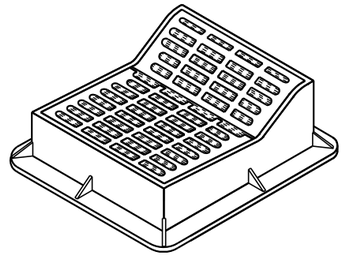

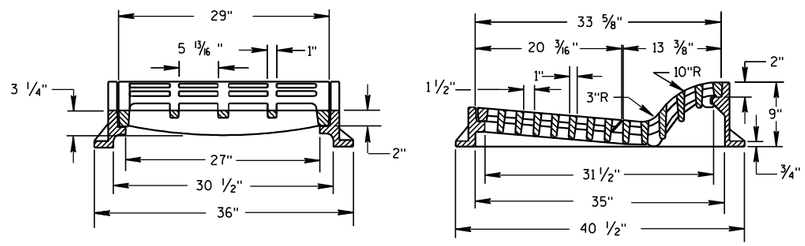

TYPE "F"

(APPROXIMATE WEIGHT 644 LBS.)

FRAME.....302 LBS.
GRATE..... 160 LBS.
GRATE..... 182 LBS.

USE WITH TYPES A & D CONCRETE CURB & GUTTER, 36 INCH.

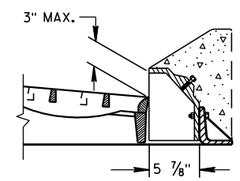

ALTERNATIVE CURB BOX FOR TYPE "HM" COVER

(APPROXIMATE WEIGHT CURB BOX 68 LBS.)

USE WITH TYPES G & J CONCRETE CURB & GUTTER, 30 INCH
NOTED AS TYPE HM-GJ ON DRAINAGE TABLE

NOTE:
SPECIAL GRATE FOR THE
TYPE "H" COVER MAY ALSO BE
USED FOR THE TYPE "HM-GJ" COVER
NOTED AS TYPE HM-GJ-S ON DRAINAGE TABLE

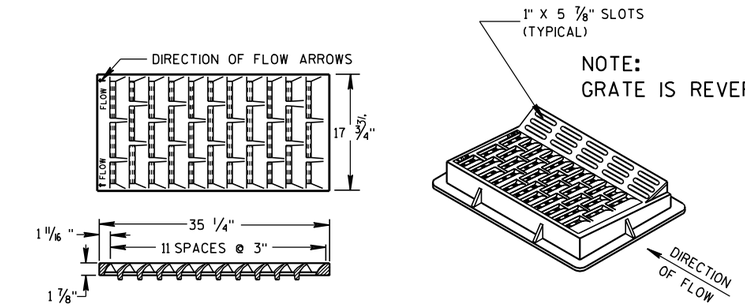

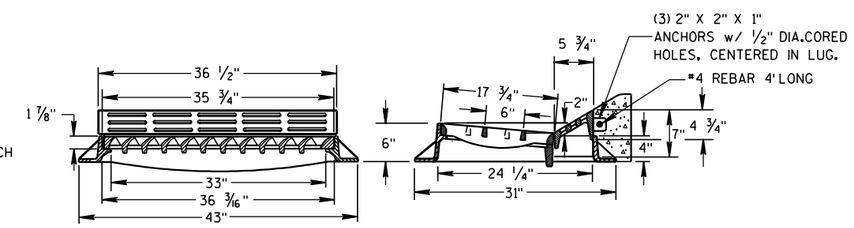

TYPE "HM"

(APPROXIMATE WEIGHT 414 LBS.)

FRAME..... 181 LBS.
GRATE..... 159 LBS.
CURB BOX..... 74 LBS.

USE WITH TYPES A & D CONCRETE CURB & GUTTER, 36 INCH.

NOTE:
SPECIAL GRATE FOR THE
TYPE "H" COVER MAY ALSO BE
USED FOR THE TYPE "HM" COVER
NOTED AS TYPE HM-S ON DRAINAGE TABLE

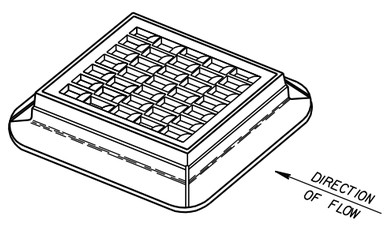

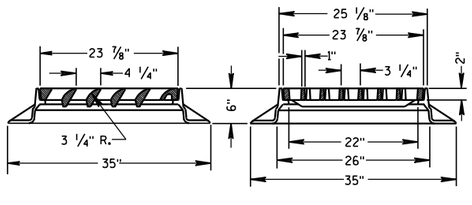

TYPE "S"

(APPROXIMATE WEIGHT 333 LBS.)

FRAME.....164 LBS.
GRATE..... 169 LBS.

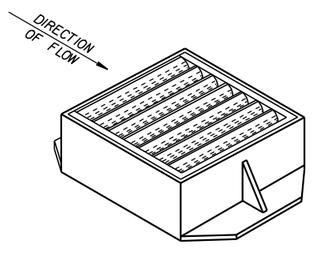

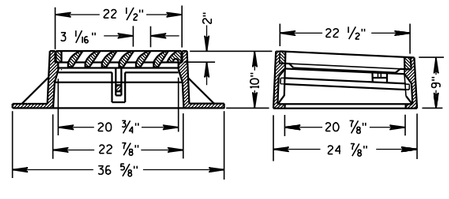

TYPE "V"

(APPROXIMATE WEIGHT 410 LBS.)

FRAME..... 269 LBS.
GRATE..... 136 LBS.
SAFETY BAR..... 5 LBS.

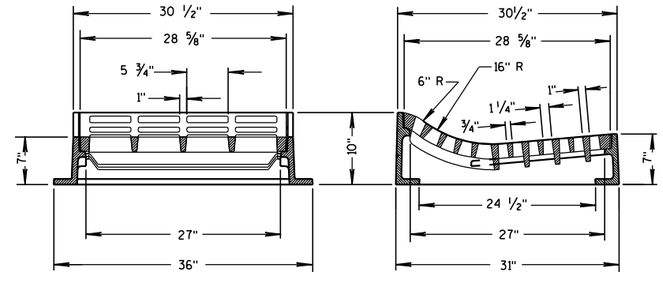

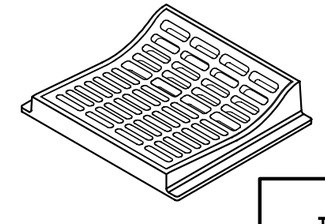

TYPE "T"

(APPROXIMATE WEIGHT 530 LBS.)

FRAME.....270 LBS.
GRATE.....260 LBS.

USE WITH TYPES R & T CONCRETE CURB & GUTTER, 36 INCH.

INLET COVERS
TYPE F, HM, HM-S, S, T, V, HM-GJ, & HM-GJ-S

STATE OF WISCONSIN
DEPARTMENT OF TRANSPORTATION

APPROVED
6/5/2012 — /S/ Jerry H. Zogg
DATE — ROADWAY STANDARDS DEVELOPMENT ENGINEER
FHWA

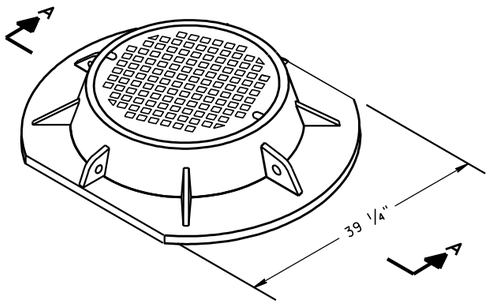

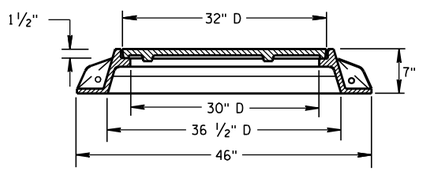

SECTION A-A

TYPE "K"

(APPROXIMATE WEIGHT 439 LBS.)

FRAME.....216 LBS.
LID.....223 LBS.

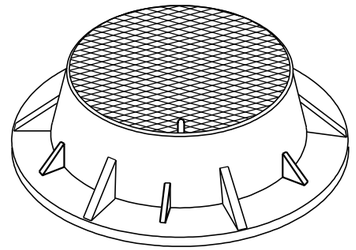

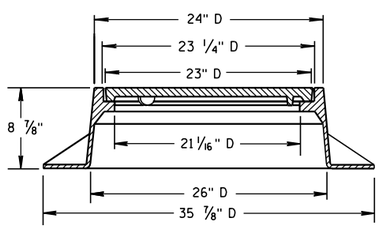

TYPE "J"

(APPROXIMATE WEIGHT 267 LBS.)

FRAME.....152 LBS.
LID.....115 LBS.

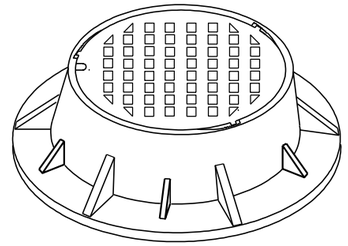

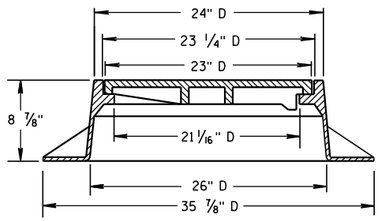

TYPE "J" SPECIAL

TYPE "B" NON-ROCKING SELF-SEAL LID

(APPROXIMATE WEIGHT 267 LBS.)

FRAME.....158 LBS.
LID.....109 LBS.

(NOTED AS TYPE J-S ON THE DRAINAGE TABLE)

GENERAL NOTES

DETAILS OF CONSTRUCTION, MATERIALS AND WORKMANSHIP NOT SHOWN ON THIS DRAWING SHALL CONFORM TO THE PERTINENT REQUIREMENTS OF THE STANDARD SPECIFICATIONS AND THE APPLICABLE SPECIAL PROVISIONS.

DETAIL DRAWINGS FOR PROPOSED ALTERNATE DESIGNS FOR MANHOLE COVERS SHALL BE SUBMITTED TO THE ENGINEER FOR APPROVAL PROVIDING THAT SUCH ALTERNATE DESIGNS MAKE PROVISION FOR EQUIVALENT CAPACITY AND STRENGTH.

ROUND FRAMES AND COVERS SHALL HAVE CONTINUOUSLY MACHINED BEARING SURFACES TO PREVENT ROCKING AND RATTLING.

THE ACTUAL WEIGHT OF COVERS MAY VARY WITHIN 5 PERCENT, PLUS OR MINUS, OF THE APPROXIMATE WEIGHT.

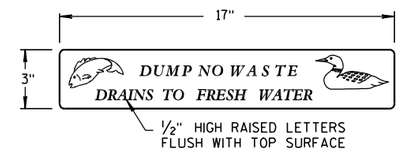

LOGO DETAIL

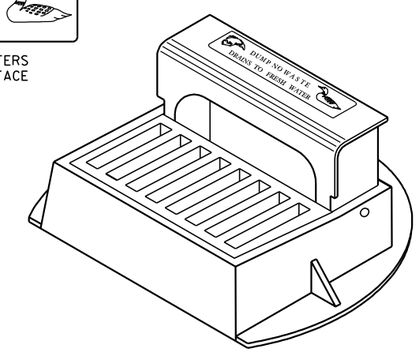

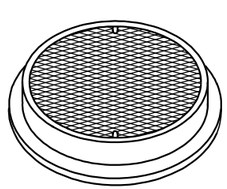

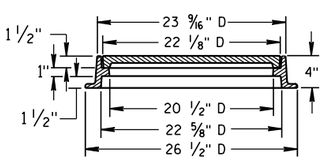

TYPE "L"

(APPROXIMATE WEIGHT 158 LBS.)

FRAME.....81 LBS.
LID.....77 LBS.

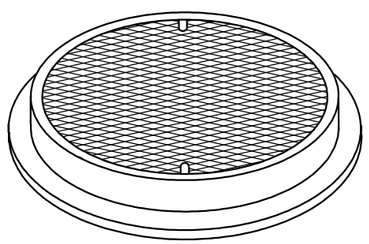

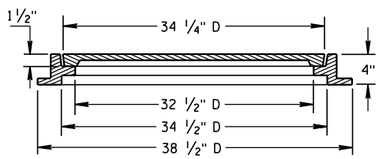

TYPE "M"

(APPROXIMATE WEIGHT 377 LBS.)

FRAME..... 125 LBS.
LID..... 252 LBS.

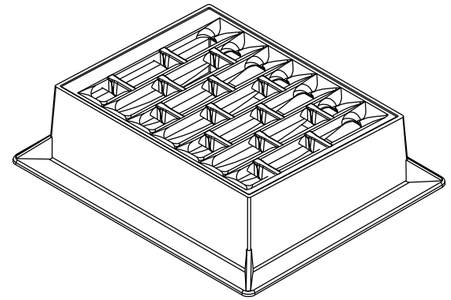

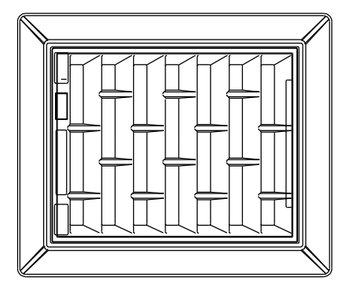

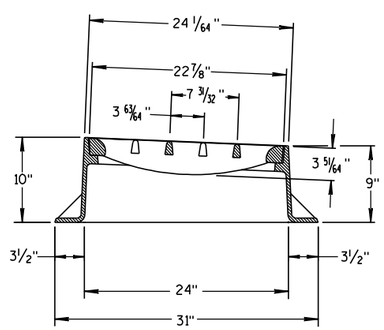

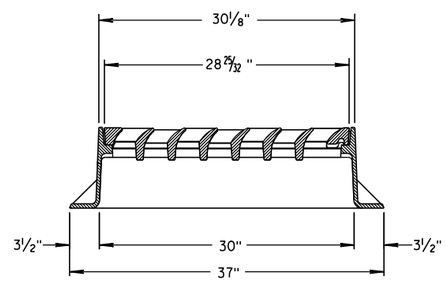

INLET COVER TYPE "BW"

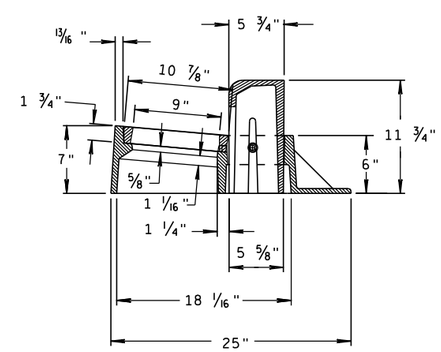

INLET COVER TYPE "Z"

(APPROXIMATE WEIGHT 344 LBS.)

FRAME.....206 LBS.
GRATE..... 46 LBS.
CURB BOX..... 92 LBS.

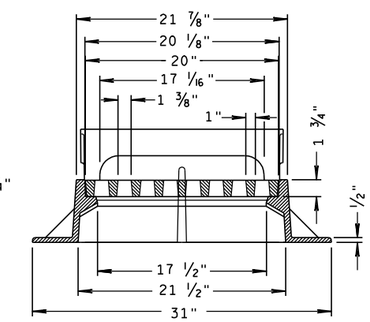

INLET COVERS, TYPE BW, Z
MANHOLE COVERS, TYPE
K, J, J-S, L & M

STATE OF WISCONSIN
DEPARTMENT OF TRANSPORTATION

APPROVED
6/5/2012 — DATE
/S/ Jerry H. Zogg — ROADWAY STANDARDS DEVELOPMENT ENGINEER
FHWA

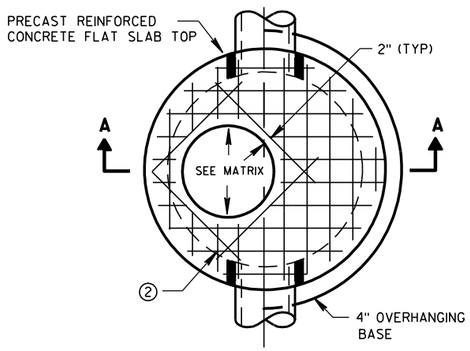

PLAN VIEW CIRCULAR OPENING

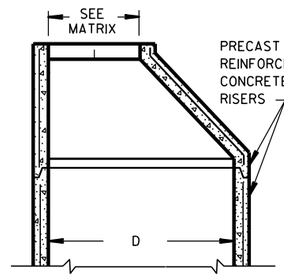

OPTIONAL PRECAST REINFORCED CONCRETE ECCENTRIC TOP

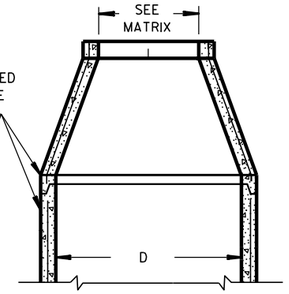

OPTIONAL PRECAST REINFORCED CONCRETE CONCENTRIC TOP

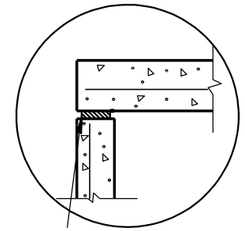

TOP WITH PLAIN END JOINT

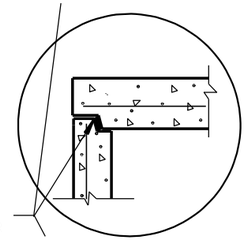

JOINTS TO BE SEALED WITH A BUTYL RUBBER SEAL PER SEALANT MANUFACTURERS RECOMMENDATIONS CONFORMING TO ASTM C990 (TYP)

TOP WITH TONGUE AND GROOVE JOINT

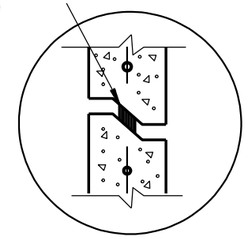

RISER WITH TONGUE AND GROOVE JOINT

DETAIL "B"

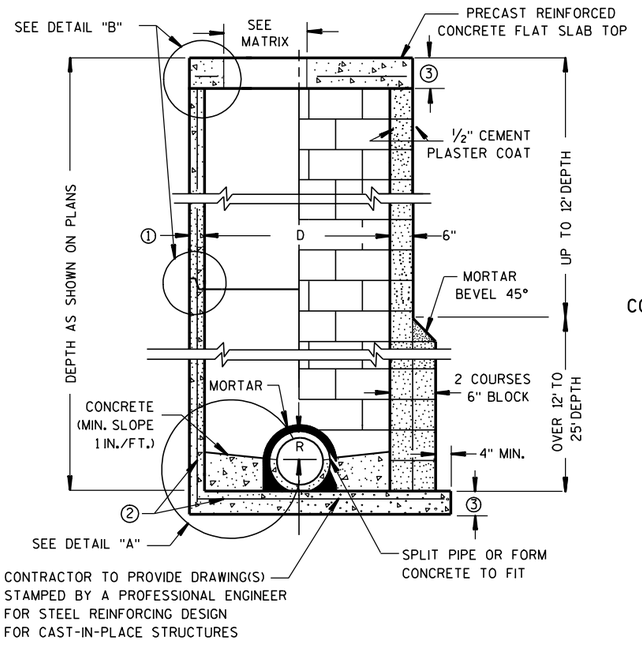

PRECAST REINFORCED CONCRETE WITH MONOLITHIC BASE

CONCRETE BLOCK WITH CAST-IN-PLACE OR PRECAST REINFORCED CONCRETE BASE ②

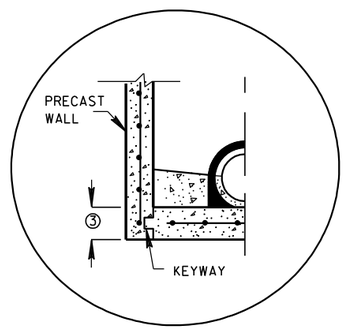

PRECAST REINFORCED CONCRETE WITH INTEGRAL BASE OPTION

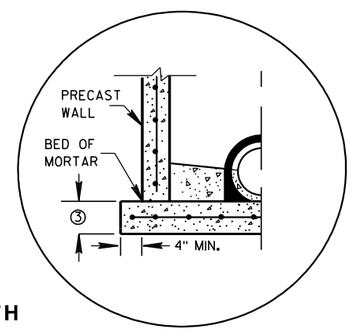

SEPERATE PRECAST REINFORCED CONCRETE BASE OPTION

DETAIL "A"

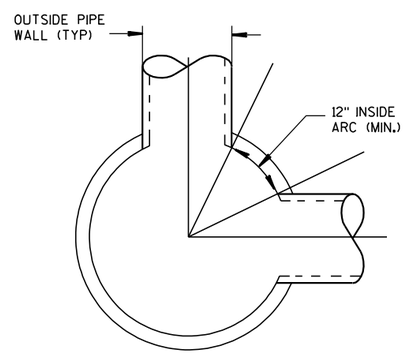

DETAIL "C"

GENERAL NOTES

DETAILS OF CONSTRUCTION, MATERIALS AND WORKMANSHIP NOT SHOWN ON THIS DRAWING SHALL CONFORM TO THE PERTINENT REQUIREMENTS OF THE STANDARD SPECIFICATIONS AND THE APPLICABLE SPECIAL PROVISIONS.

UNLESS OTHERWISE AUTHORIZED IN WRITING BY THE ENGINEER, THE CONTRACTOR SHALL NOT ORDER AND DELIVER PRECAST MANHOLE UNITS REQUIRED FOR THE PROJECT UNTIL A LIST OF SIZES IS FURNISHED BY THE ENGINEER.

DETAILED DRAWINGS FOR PROPOSED ALTERNATE DESIGNS FOR UNDERGROUND DRAINAGE STRUCTURES SHALL BE SUBMITTED TO THE ENGINEER FOR APPROVAL PROVIDING THAT SUCH ALTERNATE DESIGNS MAKE PROVISION FOR EQUIVALENT CAPACITY AND STRENGTH.

ALL DRAINAGE STRUCTURES ARE DESIGNATED ON THE PLANS AS "MANHOLES 3X3-L", "CATCH BASINS 4-B", "INLETS 2X3-H", ETC. THE FIRST NUMBERS DESIGNATE THE SIZE OF THE STRUCTURE, AND THE FOLLOWING LETTER DESIGNATES THE TYPE OF COVER TO BE USED TO COMPRISE THE COMPLETE UNIT.

BASES SHALL BE PLACED ON A BED OF MATERIAL AT LEAST 6 INCHES IN DEPTH, WHICH MEETS THE REQUIREMENTS OF GRANULAR BACKFILL. THIS BEDDING SHALL BE COMPACTED AND PROVIDE UNIFORM SUPPORT FOR THE ENTIRE AREA OF THE BASE.

PRECAST REINFORCED CONE TOPS (ECCENTRIC OR CONCENTRIC) OR PRECAST REINFORCED FLAT SLAB TOPS MAY BE USED ON CONCRETE BLOCK STRUCTURES. THE CONE TOPS SHALL BE INSTALLED ON A BED OF MORTAR.

ECCENTRIC CONE TOPS MAY BE USED ON ALL STRUCTURES, AND CONCENTRIC CONE TOPS SHALL BE USED ONLY ON STRUCTURES 5 FEET OR LESS IN DEPTH, UNLESS OTHERWISE DIRECTED BY THE ENGINEER.

STEPS MEETING AASHTO M199 AND THE FOLLOWING REQUIREMENTS SHALL BE INSTALLED IN ALL STRUCTURES OVER 5 FEET IN DEPTH: 16 INCH C-C MAXIMUM SPACING; PROJECT A MINIMUM CLEAR DISTANCE OF 4 INCHES FROM THE WALL AT THE POINT OF EMBEDMENT; MINIMUM LENGTH OF 10 INCHES; MINIMUM WALL EMBEDMENT OF 3 INCHES. FERROUS METAL STEPS NOT PAINTED OR TREATED TO RESIST CORROSION SHALL HAVE A MINIMUM CROSS SECTIONAL DIMENSION OF 1 INCH.

STEPS OF APPROVED POLYPROPYLENE PLASTIC COATED REINFORCEMENT BAR ARE ACCEPTABLE. REINFORCING BAR MUST BE A MINIMUM OF ½" AND MEET THE REQUIREMENTS OF ASTM A615.

CERTIFICATION SHALL BE PROVIDED THAT INSTALLED STEPS WHEN TESTED IN ACCORDANCE WITH SECTION 10 OF AASHTO T280 CAN WITHSTAND A VERTICAL LOAD OF 800 LBS. AND A HORIZONTAL LOAD OF 400 LBS.

ALL BAR STEEL REINFORCEMENT SHALL BE EMBEDDED 2 INCHES CLEAR UNLESS OTHERWISE SHOWN OR NOTED.

CONCRETE BLOCK WILL NOT BE PERMITED FOR STRUCTURES GREATER THAN 4 FEET IN DIAMETER.

PRECAST REINFORCED RISERS SHALL HAVE A TONGUE AND GROOVE JOINT WITH TONGUE UP OR DOWN.

ALL PRECAST MANHOLE UNITS SHALL CONFORM TO THE PERTINENT REQUIREMENTS OF AASHTO DESIGNATION M 199.

4" OVERHANGING BASES ARE REQUIRED FOR ALL CONCRETE BLOCK INSTALLATIONS. 4" OVERHANG IS REQUIRED WHEN SEPERATE PRECAST BASE IS PROVIDED. OVERHANG IS NOT REQUIRED ON PRECAST STRUCTURES WITH AN INTEGRAL OR MONOLITHIC BASE.

FOR ADDITIONAL CONFIGURATIONS, MAINTAIN A MINIMUM OF 12 INCHES AS MEASURED FROM THE INSIDE OF THE STRUCTURE WALL BETWEEN THE OUTSIDE PIPE WALLS OF ADJACENT PIPES. SEE DETAIL "C".

① MINIMUM WALL THICKNESS SHALL BE 4 INCHES FOR 3-FT, 5 INCHES FOR 4-FT, 6 INCHES FOR 5-FT, 7 INCHES FOR 6-FT, 8 INCHES FOR 7-FT AND 9 INCHES FOR 8-FT DIAMETER PRECAST MANHOLES.

② FOR PRECAST MANHOLES PROVIDE REINFORCING STEEL IN ACCORDANCE TO AASHTO M199.

③ PRECAST FLAT SLAB TOPS AND BASES WITH A DIAMETER OF 48" AND LESS SHALL HAVE A MINIMUM THICKNESS OF 6". PRECAST FLAT SLAB TOPS AND BASES WITH A DIAMETER LARGER THAN 48" SHALL HAVE A MINIMUM THICKNESS OF 8".

MANHOLE COVER OPENING MATRIX

MANHOLE COVER TYPE	C	ALL J'S	K	L	M
OPENING SIZE (FT)					
2 DIA.	X	X		X	
3 DIA.			X		X

PIPE MATRIX

MANHOLE SIZE	MAXIMUM INSIDE PIPE DIAMETER FOR TWO PIPES	
	180° SEPARATION (IN)	90° SEPARATION (IN)
3-FT	15	12
4-FT	24	18
5-FT	36	24
6-FT	42	36
7-FT	48	36
8-FT	60	42

MANHOLES 3-FT, 4-FT, 5-FT, 6-FT, 7-FT AND 8-FT DIAMETER

STATE OF WISCONSIN
DEPARTMENT OF TRANSPORTATION

APPROVED
6/5/2012 — DATE
/S/ Jerry H. Zogg — ROADWAY STANDARDS DEVELOPMENT ENGINEER
FHWA

MANHOLES 3-FT, 4-FT, 5-FT, 6-FT, 7-FT AND 8-FT DIAMETER

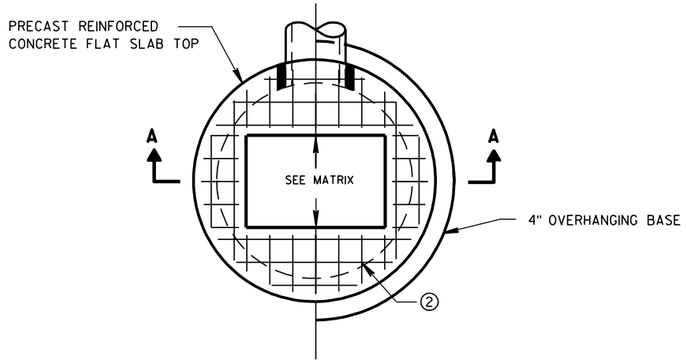

PLAN VIEW RECTANGULAR OPENING

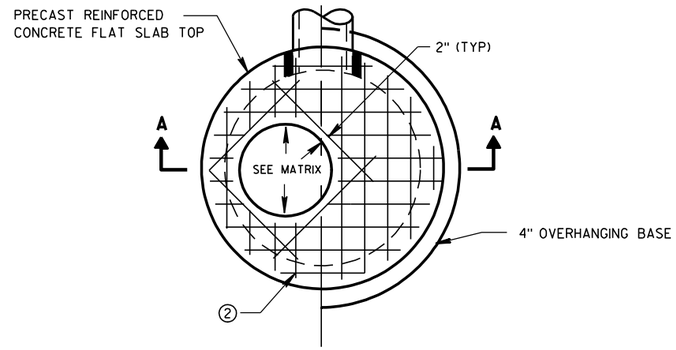

PLAN VIEW CIRCULAR OPENING

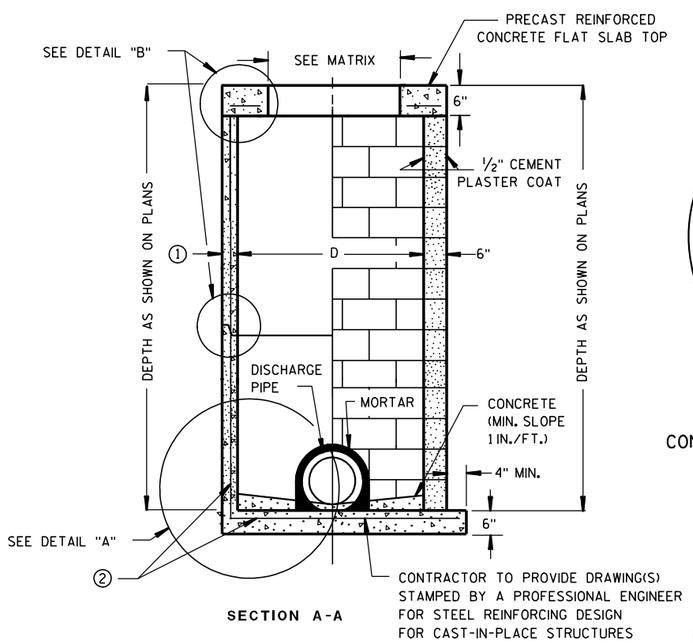

SECTION A-A

PRECAST REINFORCED CONCRETE WITH MONOLITHIC BASE

CONCRETE BLOCK WITH CAST-IN-PLACE OR PRECAST REINFORCED CONCRETE BASE ②

CIRCULAR INLETS W/ FLAT TOP

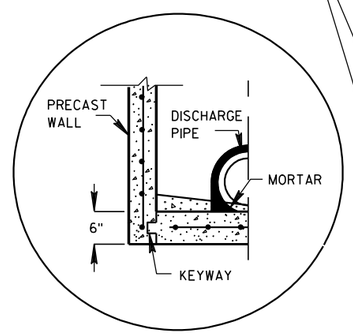

PRECAST REINFORCED
CONCRETE WITH INTEGRAL BASE OPTION

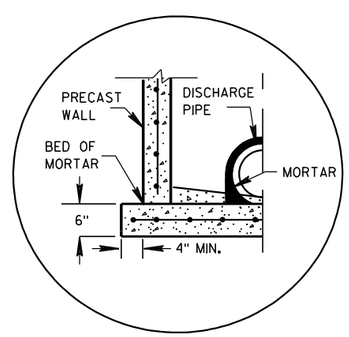

SEPERATE PRECAST REINFORCED
CONCRETE BASE OPTION

DETAIL "A"

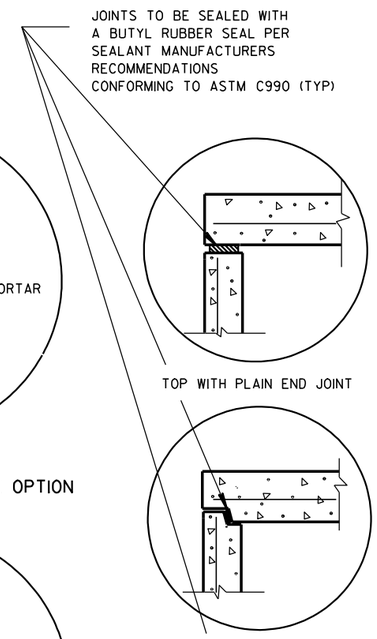

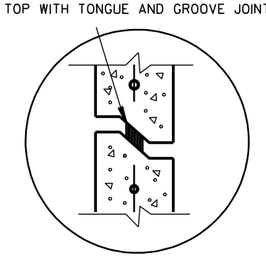

RISER WITH TONGUE AND GROOVE JOINT

DETAIL "B"

GENERAL NOTES

DETAILS OF CONSTRUCTION, MATERIALS AND WORKMANSHIP NOT SHOWN ON THIS DRAWING SHALL CONFORM TO THE PERTINENT REQUIREMENTS OF THE STANDARD SPECIFICATIONS AND THE APPLICABLE SPECIAL PROVISIONS.

UNLESS OTHERWISE AUTHORIZED IN WRITING BY THE ENGINEER, THE CONTRACTOR SHALL NOT ORDER AND DELIVER PRECAST INLET UNITS REQUIRED FOR THE PROJECT UNTIL A LIST OF SIZES IS FURNISHED BY THE ENGINEER.

DETAILED DRAWINGS FOR PROPOSED ALTERNATE DESIGNS FOR UNDERGROUND DRAINAGE STRUCTURES SHALL BE SUBMITTED TO THE ENGINEER FOR APPROVAL PROVIDING THAT SUCH ALTERNATE DESIGNS MAKE PROVISION FOR EQUIVALENT CAPACITY AND STRENGTH.

ALL DRAINAGE STRUCTURES ARE DESIGNATED ON THE PLANS AS "MANHOLES 3X3-L", "CATCH BASINS 4-B", "INLETS 2X3-H", ETC. THE FIRST NUMBERS DESIGNATE THE SIZE OF THE STRUCTURE, AND THE FOLLOWING LETTER DESIGNATES THE TYPE OF COVER TO BE USED TO COMPRISE THE COMPLETE UNIT.

BASES SHALL BE PLACED ON A BED OF MATERIAL AT LEAST 6 INCHES IN DEPTH, WHICH MEETS THE REQUIREMENTS OF GRANULAR BACKFILL. THIS BEDDING SHALL BE COMPACTED AND PROVIDE UNIFORM SUPPORT FOR THE ENTIRE AREA OF THE BASE.

ALL BAR STEEL REINFORCEMENT SHALL BE EMBEDDED 2 INCHES CLEAR UNLESS OTHERWISE SHOWN OR NOTED.

ALL PRECAST INLET UNITS SHALL CONFORM TO THE PERTINENT REQUIREMENTS OF AASHTO DESIGNATION M199.

PRECAST REINFORCED RISERS SHALL HAVE A TONGUE AND GROOVE JOINT WITH TONGUE UP OR DOWN.

4" OVERHANGING BASES ARE REQUIRED FOR ALL CONCRETE BLOCK INSTALLATIONS. 4" OVERHANG IS REQUIRED WHEN SEPERATE PRECAST BASE IS PROVIDED. OVERHANG IS NOT REQUIRED ON PRECAST STRUCTURES WITH AN INTEGRAL OR MONOLITHIC BASE.

FOR ADDITIONAL CONFIGURATIONS, MAINTAIN A MINIMUM OF 12 INCHES AS MEASURED FROM THE INSIDE OF THE STRUCTURE WALL BETWEEN THE OUTSIDE PIPE WALLS OF ADJACENT PIPES. SEE DETAIL "C".

① MINIMUM WALL THICKNESS SHALL BE 4-IN FOR 3-FT DIAMETER AND 5-IN FOR 4-FT DIAMETER PRECAST INLETS.

② FOR PRECAST CATCH BASINS PROVIDE REINFORCING STEEL IN ACCORDANCE TO AASHTO M199.

INLET COVER OPENING MATRIX

	INLET COVER TYPE	ALL A'S	ALL B'S	BW	C	F	ALL H'S	S	T	V	WM	Z
INLET SIZE	OPENING SIZE (FT)											
3-FT	2 DIA.				X							X
	2X2	X	X					X		X		
4-FT	2 DIA.				X							X
	2X2	X	X					X		X		
	2X2.5			X				X	X	X	X	
	2X3						X					
	2.5X3					X						

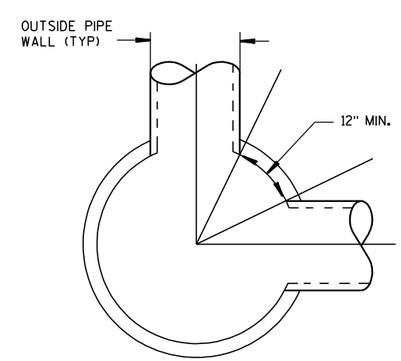

DETAIL "C"

PIPE MATRIX

INLET SIZE	MAXIMUM INSIDE PIPE DIAMETER FOR TWO PIPES	
	180° SEPARATION (IN)	90° SEPARATION (IN)
3-FT	15	12
4-FT	24	18

INLETS 3-FT AND 4-FT DIAMETER

INLETS 3-FT
AND 4-FT DIAMETER

STATE OF WISCONSIN
DEPARTMENT OF TRANSPORTATION

APPROVED
6/5/2012 — DATE
/S/ Jerry H. Zogg — ROADWAY STANDARDS DEVELOPMENT ENGINEER
FHWA

6

S.D.D. 8 C 6-1

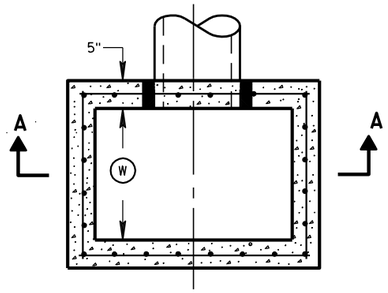

PLAN VIEW

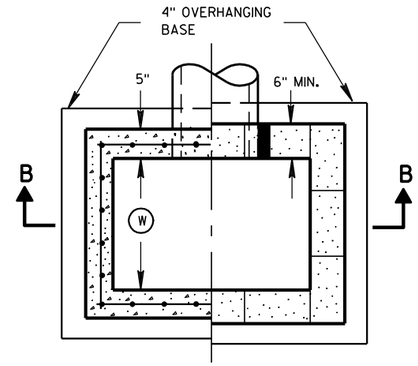

PLAN VIEW

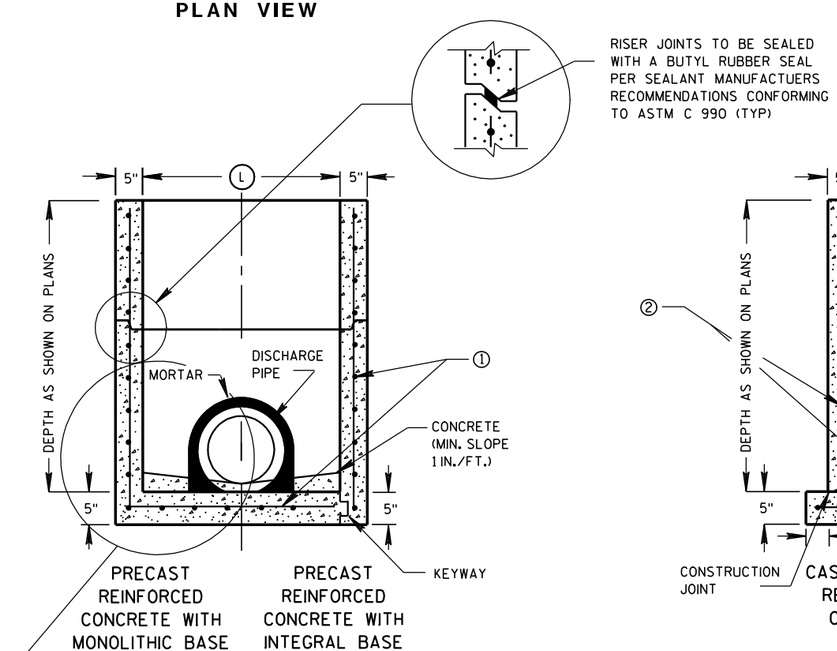

SECTION A-A

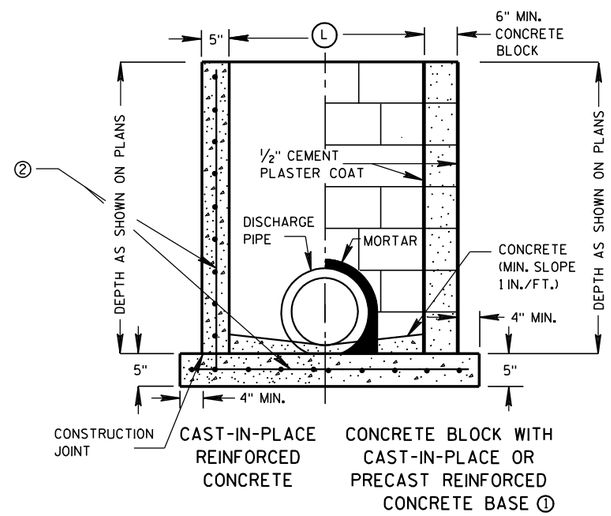

SECTION B-B

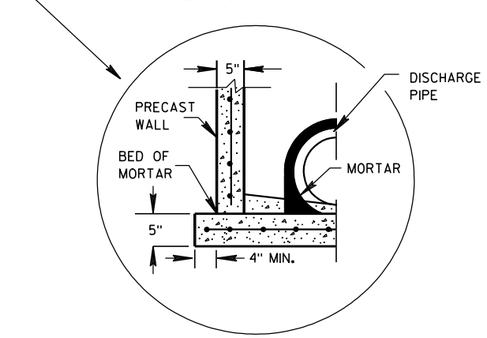

SEPERATE PRECAST REINFORCED CONCRETE BASE OPTION

GENERAL NOTES

DETAILS OF CONSTRUCTION, MATERIALS AND WORKMANSHIP NOT SHOWN ON THIS DRAWING SHALL CONFORM TO THE PERTINENT REQUIREMENTS OF THE STANDARD SPECIFICATIONS AND THE APPLICABLE SPECIAL PROVISIONS.

UNLESS OTHERWISE AUTHORIZED IN WRITING BY THE ENGINEER, THE CONTRACTOR SHALL NOT ORDER AND DELIVER PRECAST INLET UNITS REQUIRED FOR THE PROJECT UNTIL A LIST OF SIZES IS FURNISHED BY THE ENGINEER.

DETAILED DRAWINGS FOR PROPOSED ALTERNATE DESIGNS FOR UNDERGROUND DRAINAGE STRUCTURES SHALL BE SUBMITTED TO THE ENGINEER FOR APPROVAL PROVIDING THAT SUCH ALTERNATE DESIGNS MAKE PROVISION FOR EQUIVALENT CAPACITY AND STRENGTH.

ALL PRECAST INLET UNITS SHALL CONFORM TO THE PERTINENT REQUIREMENTS OF ASTM C 913.

ALL DRAINAGE STRUCTURES ARE DESIGNATED ON THE PLANS AS "MANHOLES 3X3-L", "CATCH BASINS 4-B", "INLETS 2X3-H", ETC. THE FIRST NUMBERS DESIGNATES THE SIZE OF THE STRUCTURE, AND THE FOLLOWING LETTER DESIGNATES THE TYPE OF COVER TO BE USED TO COMPRISE THE COMPLETE UNIT.

BASES SHALL BE PLACED ON A BED OF MATERIAL AT LEAST 6 INCHES IN DEPTH, WHICH MEETS THE REQUIREMENTS OF GRANULAR BACKFILL. THIS BEDDING SHALL BE COMPACTED AND PROVIDE UNIFORM SUPPORT FOR THE ENTIRE AREA OF THE BASE.

ALL BAR STEEL REINFORCEMENT SHALL BE EMBEDDED 2 INCHES CLEAR UNLESS OTHERWISE SHOWN OR NOTED.

PRECAST REINFORCED RISERS SHALL HAVE A TONGUE AND GROOVE JOINT WITH TONGUE UP OR DOWN.

4" OVERHANGING BASES ARE REQUIRED FOR CAST-IN-PLACE REINFORCED CONCRETE AND CONCRETE BLOCK INSTALLATIONS.
4" OVERHANG IS REQUIRED WHEN SEPERATE PRECAST BASE IS PROVIDED.
OVERHANG IS NOT REQUIRED ON PRECAST STRUCTURES WITH AN INTEGRAL OR MONOLITHIC BASE.

MAXIMUM INSIDE PIPE DIAMETER DETERMINED BY 3 INCH CLEARANCE ON EACH SIDE OF THE OUTSIDE WALL OF THE PIPE. SEE DETAIL "A". ASSUMES PIPE ENTERS PERPENDICULAR TO THE STRUCTURE.

① FOR PRECAST INLETS PROVIDE REINFORCING STEEL IN ACCORDANCE TO ASTM C 913.

② CONTRACTOR TO PROVIDE DRAWING(S) STAMPED BY A PROFESSIONAL ENGINEER FOR STEEL REINFORCING DESIGN FOR CAST-IN-PLACE STRUCTURES.

INLET COVER MATRIX

INLET SIZE		INLET COVER TYPE	ALL A'S	ALL B'S	BW	F	ALL H'S	S	T	V	WM
	WIDTH Ⓦ (FT)	LENGTH Ⓛ (FT)									
2X2-FT	2	2	X	X				X		X	
2X2.5-FT	2	2.5			X			X	X	X	X
2X3-FT	2	3					X				
2.5X3-FT	2.5	3				X					

PIPE MATRIX

INLET SIZE	MAXIMUM INSIDE PIPE DIAMETER	
	WIDTH (IN)	LENGTH (IN)
2X2-FT	12	12
2X2.5-FT	12	18
2X3-FT	12	24
2.5X3-FT	18	24

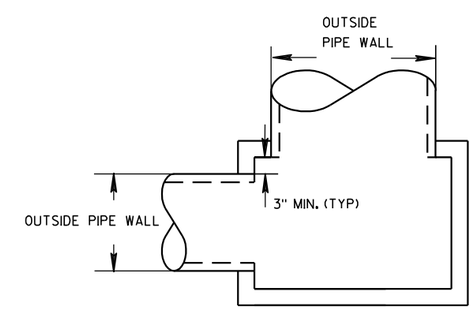

DETAIL "A"

INLETS 2X2-FT, 2X2.5-FT, 2X3-FT AND 2.5X3-FT

INLETS 2X2-FT, 2X2.5-FT, 2X3-FT AND 2.5X3-FT

STATE OF WISCONSIN
DEPARTMENT OF TRANSPORTATION

APPROVED
6/5/2012 — DATE
/S/ Jerry H. Zoda — ROADWAY STANDARDS D ENGINEER
FHWA

6

S.D.D. 8 C 7-1

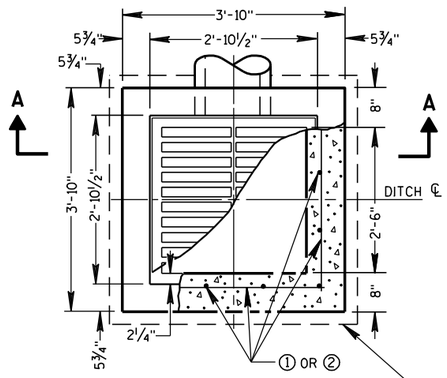

PLAN VIEW

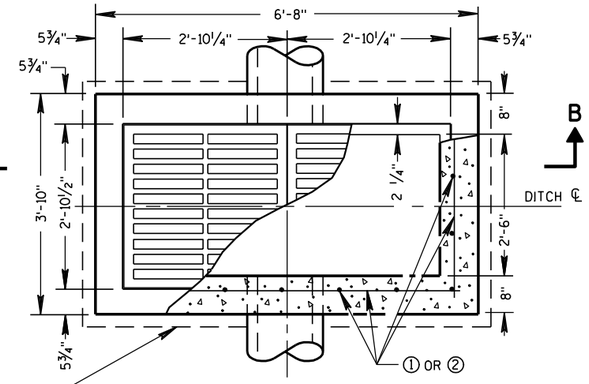

PLAN VIEW

4" OVERHANGING BASE ON REINFORCED CAST-IN-PLACE CONCRETE INLETS

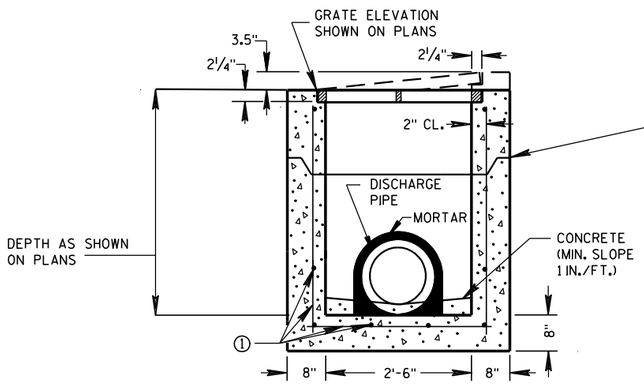

PRECAST REINFORCED CONCRETE SECTION A-A

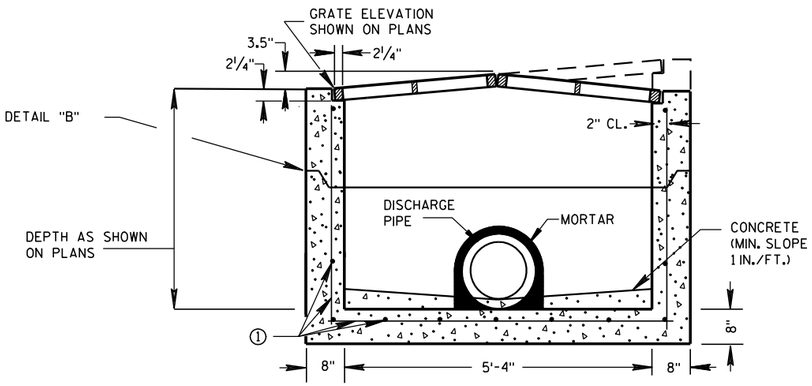

PRECAST REINFORCED CONCRETE SECTION B-B

GENERAL NOTES

DETAILS OF CONSTRUCTION, MATERIALS AND WORKMANSHIP NOT SHOWN ON THIS DRAWING SHALL CONFORM TO THE PERTINENT REQUIREMENTS OF THE STANDARD SPECIFICATIONS AND THE APPLICABLE SPECIAL PROVISIONS.

UNLESS OTHERWISE AUTHORIZED IN WRITING BY THE ENGINEER, THE CONTRACTOR SHALL NOT ORDER AND DELIVER PRECAST INLET UNITS REQUIRED FOR THE PROJECT UNTIL A LIST OF SIZES IS FURNISHED BY THE ENGINEER.

DETAILED DRAWINGS FOR PROPOSED ALTERNATE DESIGNS FOR INLETS WHICH MAY INCLUDE PRECAST REINFORCED CONCRETE INLETS, SHALL BE SUBMITTED TO THE ENGINEER FOR APPROVAL PROVIDING THAT SUCH ALTERNATE DESIGNS MAKE PROVISION FOR EQUIVALENT CAPACITY AND STRENGTH.

ALL MEDIAN INLETS ARE DESIGNATED ON THE PLANS AS "INLETS, 1G-MS", ETC. THE FIRST NUMBER AND LETTER DESIGNATE THE TYPE OF STRUCTURE, AND THE FOLLOWING LETTERS DESIGNATE THE TYPE OF COVER TO BE USED TO COMPRISE THE COMPLETE UNIT.

ALL BAR STEEL REINFORCEMENT SHALL BE EMBEDDED 2 INCHES CLEAR UNLESS OTHERWISE SHOWN OR NOTED.

PRECAST REINFORCED RISERS SHALL HAVE A TONGUE AND GROOVE JOINT WITH TONGUE UP OR DOWN.

ALL PRECAST INLET UNITS SHALL CONFORM TO THE PERTINENT REQUIREMENTS OF ASTM C 913.

MAXIMUM INSIDE PIPE DIAMETER DETERMINED BY 3" CLEARANCE ON EACH SIDE OF THE OUTSIDE WALL OF THE PIPE. SEE DETAIL "A". ASSUMES PIPE ENTERS PERPENDICULAR TO THE STRUCTURE.

① FOR PRECAST INLETS PROVIDE REINFORCING STEEL IN ACCORDANCE TO ASTM C 913.

② CONTRACTOR TO PROVIDE DRAWING(S) STAMPED BY A PROFESSIONAL ENGINEER FOR STEEL REINFORCING DESIGN FOR CAST-IN-PLACE STRUCTURES.

PIPE MATRIX

	MAXIMUM INSIDE PIPE DIAMETER	
INLET SIZE	WIDTH (IN)	LENGTH (IN)
1 GRATE	18	18
2 GRATE	18	42

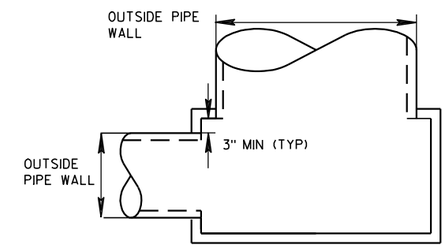

DETAIL "A"

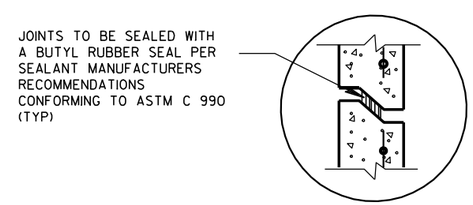

DETAIL "B"

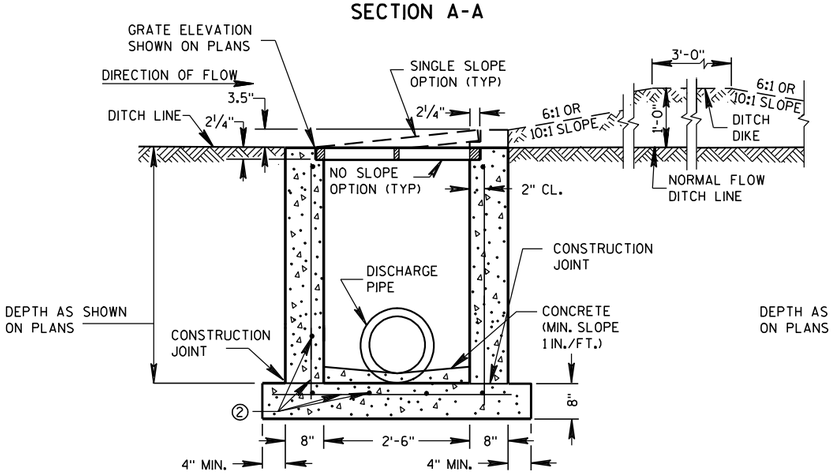

REINFORCED CAST-IN-PLACE CONCRETE SECTION A-A

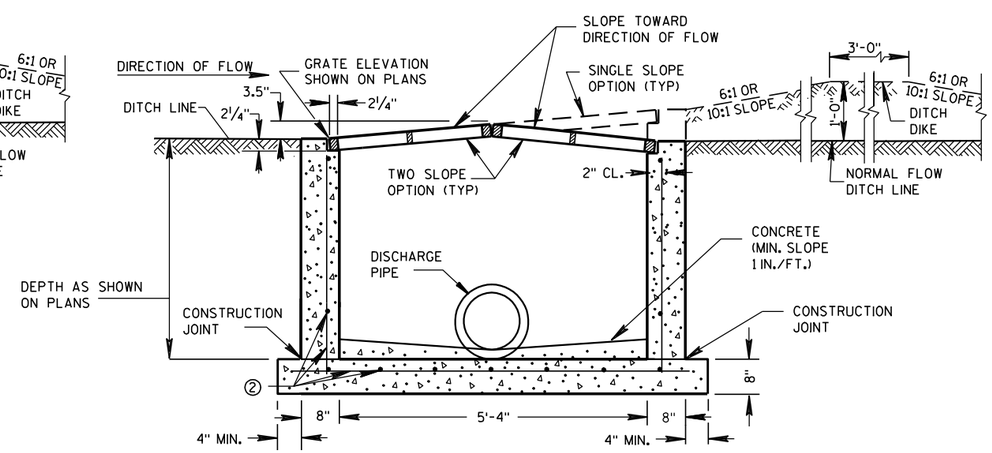

REINFORCED CAST-IN-PLACE CONCRETE SECTION B-B

INLETS MEDIAN 1 GRATE

INLETS MEDIAN 2 GRATE

INLETS MEDIAN 1 AND 2 GRATE

STATE OF WISCONSIN
DEPARTMENT OF TRANSPORTATION

APPROVED

6/5/2012	/S/ Jerry H. Zogg
DATE	ROADWAY STANDARDS DEVELOPMENT ENGINEER

FHWA

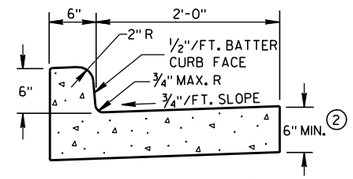

TYPES A & D ①

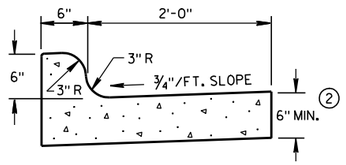

TYPES K & L ①

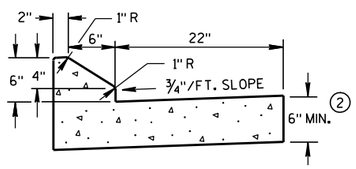

6" SLOPED CURB TYPES G & J ①

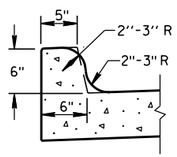

OPTIONAL CURB SHAPE FOR TYPES K & L ①

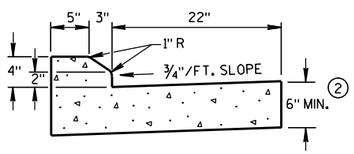

4" SLOPED CURB TYPES G & J ①

CONCRETE CURB & GUTTER 30"

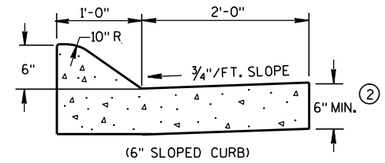

(6" SLOPED CURB)

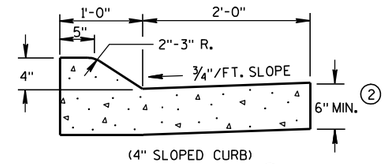

(4" SLOPED CURB)

TYPES A & D ①

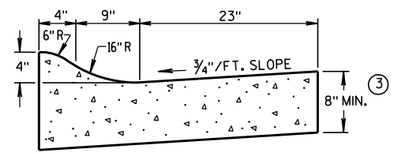

4" SLOPED CURB TYPES R & T ① ④

CONCRETE CURB & GUTTER 36"

GENERAL NOTES

DETAILS OF CONSTRUCTION, MATERIALS AND WORKMANSHIP NOT SHOWN ON THIS DRAWING SHALL CONFORM TO THE PERTINENT REQUIREMENTS OF THE CONTRACT.

PAVEMENT TIES AND TIE BARS SHALL BE EPOXY COATED IN CONFORMANCE WITH SUBSECTION 505.2.6.2 OF THE STANDARD SPECIFICATIONS.

INTEGRAL CURB & GUTTER SHALL CONFORM TO THE DETAILS SHOWN FOR CONCRETE CURB & GUTTER INCLUDING THE TRANSVERSE GUTTER SLOPE. A LONGITUDINAL CONSTRUCTION JOINT IS NOT REQUIRED WITH INTEGRAL CURB AND GUTTER.

WHERE THE TRANSVERSE JOINTS IN THE PAVEMENT ARE REQUIRED TO BE SEALED, THE JOINTS IN THE INTEGRAL CURB AND GUTTER SHALL BE SEALED TO THE FACE OF CURB WITH THE SAME TYPE OF SEALANT. THE COST OF FURNISHING AND INSTALLING THIS SEALANT SHALL BE INCIDENTAL TO THE ITEM CONCRETE CURB AND GUTTER.

UNLESS OTHERWISE SHOWN ON THE TYPICAL CROSS SECTIONS, THE BASE AGGREGATE AND COMMON EXCAVATION LIMITS ARE 2'-0" BEHIND THE BACK OF CURBS.

① TIE BARS ARE REQUIRED FOR CURB AND GUTTER TYPES A, G, K AND R.

② THE BOTTOM OF CURB AND GUTTER MAY BE CONSTRUCTED EITHER LEVEL OR PARALLEL TO THE SLOPE OF THE SUBGRADE OR BASE AGGREGATE PROVIDED A 6" MINIMUM GUTTER THICKNESS IS MAINTAINED.

③ THE BOTTOM OF CURB AND GUTTER MAY BE CONSTRUCTED EITHER LEVEL OR PARALLEL TO THE SLOPE OF THE SUBGRADE OR BASE AGGREGATE PROVIDED A 8" MINIMUM GUTTER THICKNESS IS MAINTAINED.

④ THE FACE OF CURB IS 6" FROM THE BACK OF CURB.

⑤ WHEN REVERSE SLOPE GUTTER IS REQUIRED, THE LOCATION(S) WILL BE SHOWN ELSEWHERE IN THE PLAN.

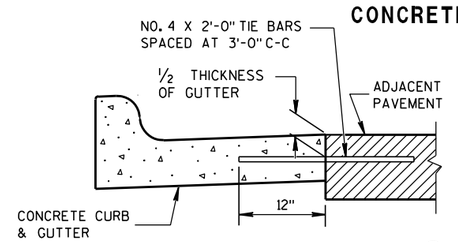

TYPICAL TIE BAR LOCATION ①

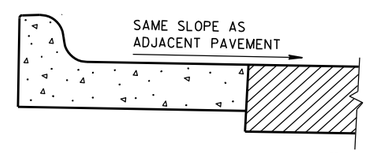

REVERSE SLOPE GUTTER ⑤
(TYPICAL FOR ALL CURB & GUTTER TYPES)

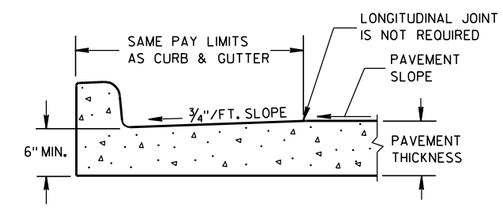

PARTIAL SECTION OF PAVEMENT WITH INTEGRAL CURB & GUTTER

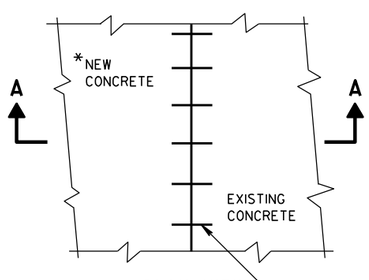

*NEW CURB & GUTTER, SURFACE DRAINS, CONCRETE PAVEMENT OR OTHER NEW CONCRETE.

PLAN VIEW

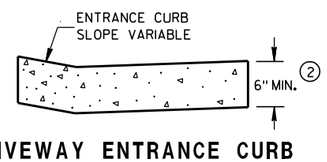

DRIVEWAY ENTRANCE CURB
(WHEN DIRECTED BY THE ENGINEER)

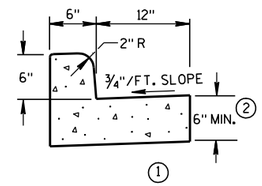

① TYPES A & D

CONCRETE CURB & GUTTER 18"

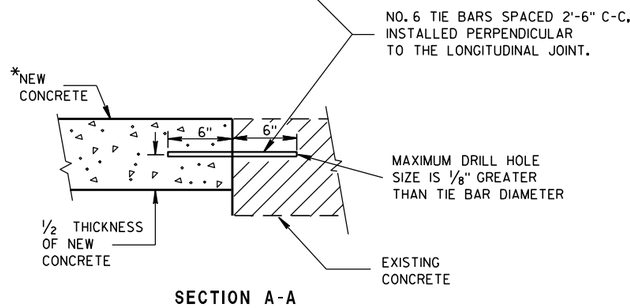

SECTION A-A

TIE BARS DRILLED INTO EXISTING PAVEMENT

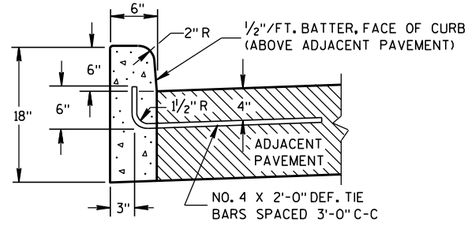

① TYPES A & D

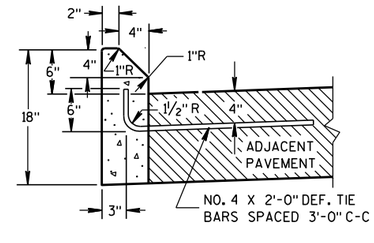

① TYPES G & J

CONCRETE CURB

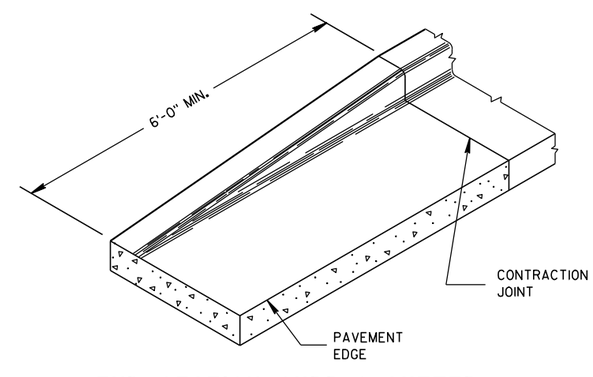

END SECTION CURB & GUTTER

CONCRETE CURB, CONCRETE CURB & GUTTER AND TIES

STATE OF WISCONSIN
DEPARTMENT OF TRANSPORTATION

APPROVED
9/4/08 — DATE
/S/ Jerry H. ---- — ROADWAY STANDARDS ENGINEER
FHWA

6

S.D.D. 8 D 1-17

GENERAL NOTES

DETAILS OF CONSTRUCTION, MATERIALS AND WORKMANSHIP NOT SHOWN ON THIS DRAWING SHALL CONFORM TO PERTINENT REQUIREMENTS OF THE STANDARD SPECIFICATIONS AND APPLICABLE SPECIAL PROVISIONS.

WELDED STEEL WIRE FABRIC SHALL BE IN ACCORDANCE WITH AASHTO SPECIFICATION M55.

① JOINTS SHALL BE 1/8 TO 1/4 INCH WIDE BY 1 1/2 INCHES DEEP AND SPACED AT UNIFORM INTERVALS OF APPROXIMATELY 4 FEET.

② GEOTEXTILE FABRIC TYPE "R" SHALL UNDERLAY THE FULL LENGTH AND WIDTH OF THE CONCRETE SURFACE DRAIN AND RIPRAP.

③ CONCRETE SURFACE DRAIN WITHOUT CURB AND GUTTER MAY BE USED ON BACKSLOPES WHEN SPECIFIED

ASPHALTIC FLUME

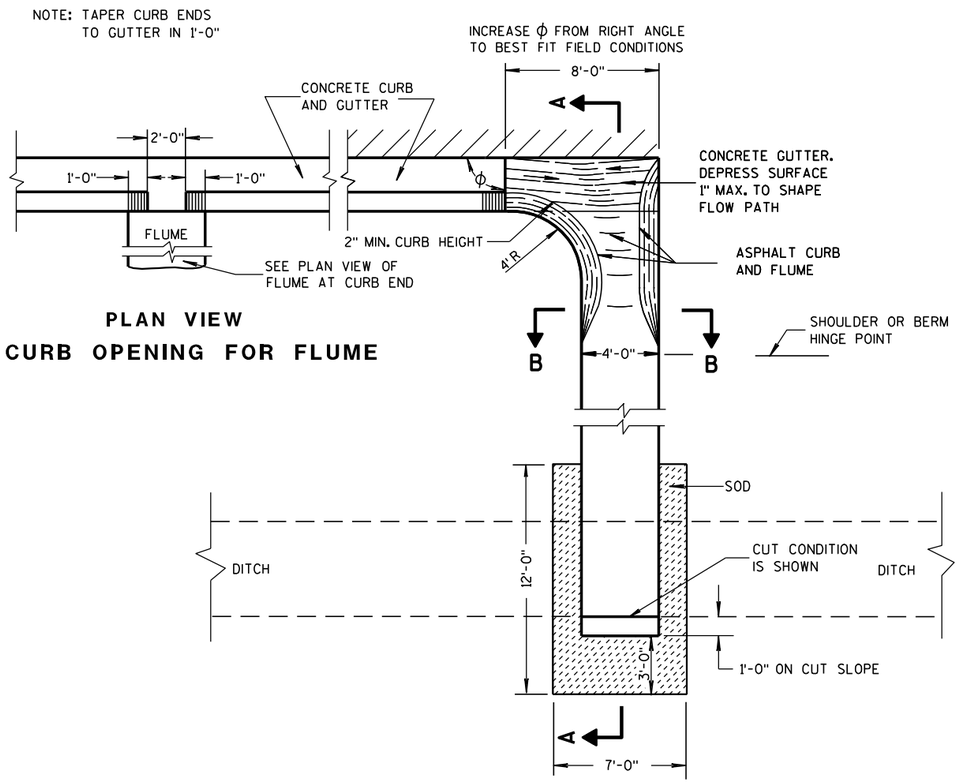

PLAN VIEW
CURB OPENING FOR FLUME

PLAN VIEW
FLUME AT CURB END

③ CONCRETE SURFACE DRAIN

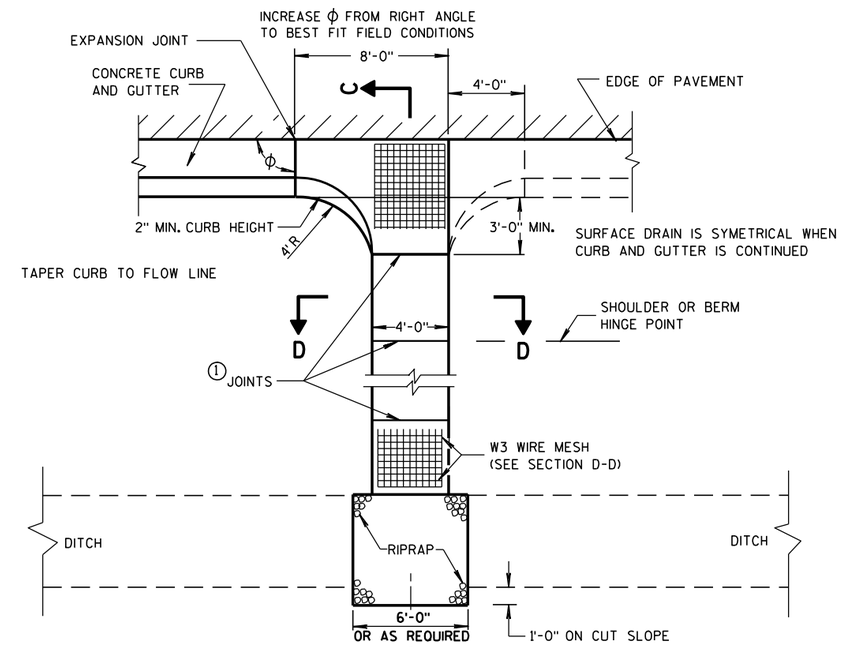

PLAN VIEW

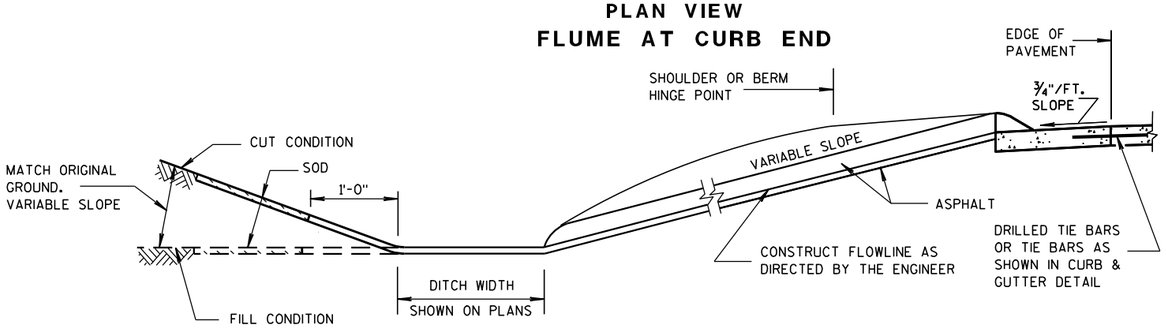

SECTION A-A

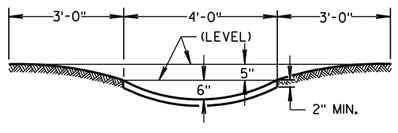

SECTION B-B

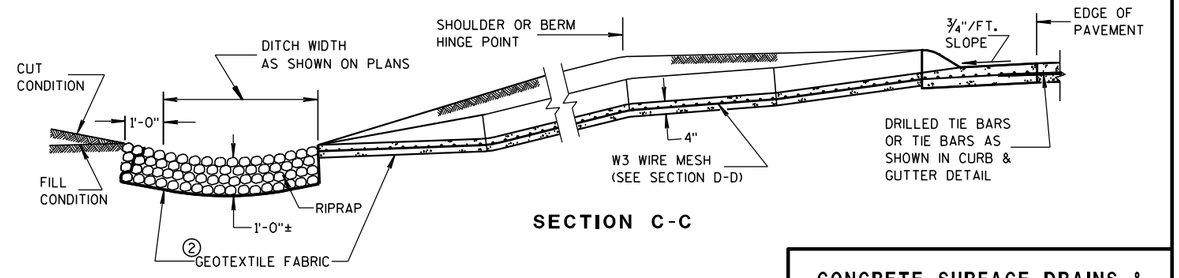

SECTION C-C

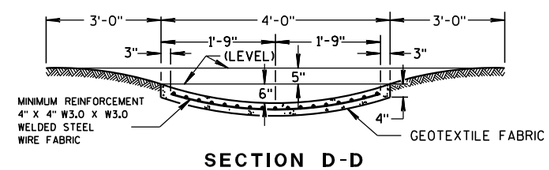

SECTION D-D

CONCRETE SURFACE DRAINS & ASPHALTIC FLUMES

STATE OF WISCONSIN
DEPARTMENT OF TRANSPORTATION

APPROVED
9-4-08 /S/ Jerry H. Zogg
DATE ROADWAY STANDARDS ENGINEER
FHWA

6

S.D.D. 8 D 4-5

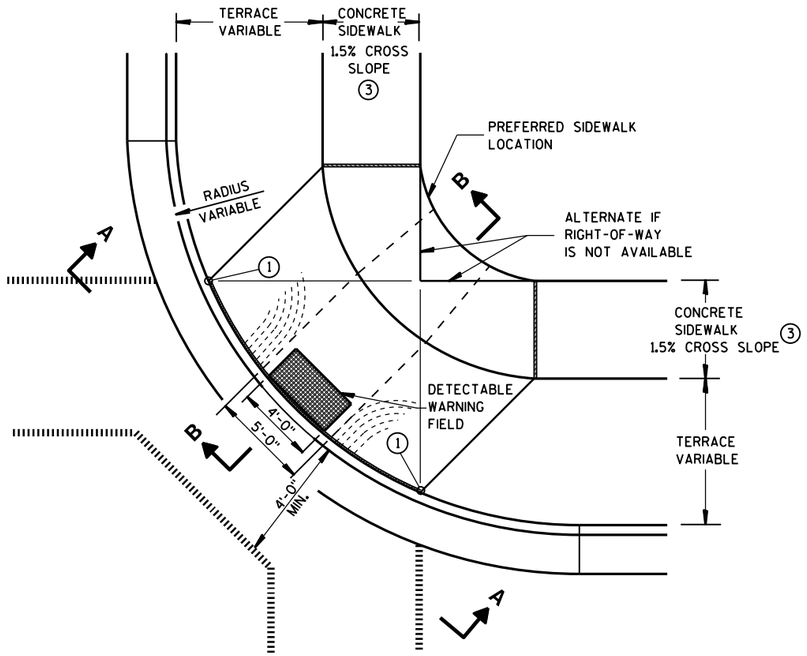

PLAN VIEW

TYPE 1 RAMP

(CENTER OF CORNER RADIUS)

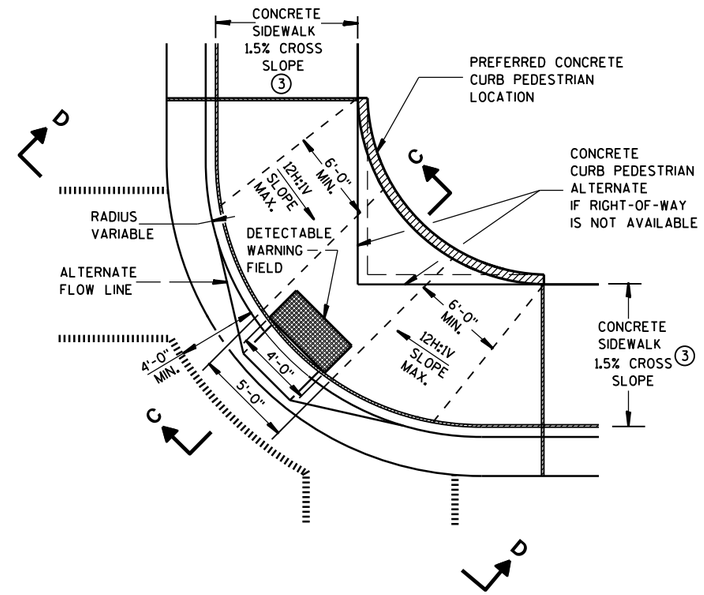

PLAN VIEW

TYPE 1-A RAMP

(NO TERRACE)

GENERAL NOTES

DETAILS OF CONSTRUCTION, MATERIALS AND WORKMANSHIP NOT SHOWN ON THIS DRAWING SHALL CONFORM TO THE PERTINENT REQUIREMENTS OF THE STANDARD SPECIFICATIONS AND THE APPLICABLE SPECIAL PROVISIONS.

RAMPS SHALL BE BUILT AT 12H:1V OR FLATTER. WHEN NECESSARY, THE SIDEWALK ELEVATION MAY BE LOWERED TO MEET THE HIGH POINT ON THE RAMP.

TYPE 1 RAMPS SHALL HAVE A NORMAL SIDEWALK APRON AND CURB ON BOTH SIDES OF RAMP.

DETECTABLE WARNING FIELD SHALL BE MEASURED AND PAID BY THE SQUARE FOOT AS "CURB RAMP DETECTABLE WARNING FIELD". THE CONCRETE PEDESTRIAN CURB, IF NEEDED, SHALL BE MEASURED AND PAID BY THE LINEAL FOOT AS "CONCRETE CURB PEDESTRIAN". CONCRETE SIDEWALK IN THE CURB RAMP AREA SHALL BE MEASURED AND PAID BY THE SQUARE FOOT AS CONCRETE SIDEWALK, INCLUDING THE AREA UNDER THE DETECTABLE WARNING FIELD.

SELECT CURB RAMP DETECTABLE WARNING FIELD MATERIALS AND DEVICES FROM THE DEPARTMENT'S APPROVED MATERIALS LIST. THE COLOR OF THE DETECTABLE WARNING FIELD IS SPECIFIED ELSEWHERE AND IS INCIDENTAL TO THE BID ITEM OF "CURB RAMP DETECTABLE WARNING FIELD".

DETECTABLE WARNING FIELDS THAT ARE INSTALLED AS A GROUP OR SIDE BY SIDE, SHALL BE FROM THE SAME MANUFACTURER.

SURFACE TEXTURE OF THE RAMP SHALL BE OBTAINED BY COARSE BROOMING TRANSVERSE TO THE SLOPE OF THE RAMP.

① THIS POINT IS AN EXTENSION OF OUTSIDE EDGE OF APPROACHING SIDEWALK WHERE IT MEETS THE BACK OF CONCRETE CURB.

② GRADE CHANGE BETWEEN GUTTER FLAG SLOPE AND THE CURB RAMP SLOPE SHALL NOT EXCEED 11%. PROVIDE DRAINAGE AWAY FROM CURB RAMP AT GUTTER FLAG INTERFACE.

③ ±0.5% CONSTRUCTION TOLERANCE IN SIDEWALK CROSS SLOPE. THE SIDEWALK CROSS SLOPE SHALL NOT EXCEED 2% WITHOUT PRIOR APPROVAL FROM THE ENGINEER.

LEGEND

- ½" EXPANSION JOINT-SIDEWALK
- CONTRACTION JOINT FIELD LOCATED
- PAVEMENT MARKING CROSSWALK (WHITE)
- ALTERNATIVE LAYOUT

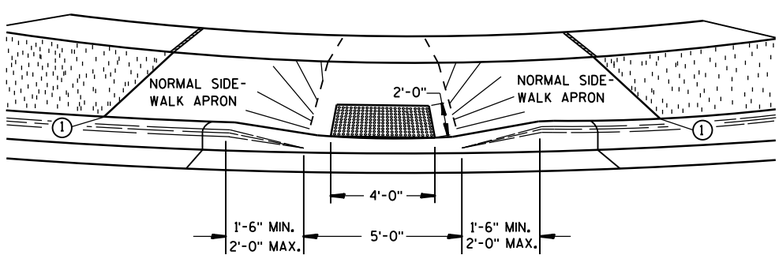

VIEW A-A

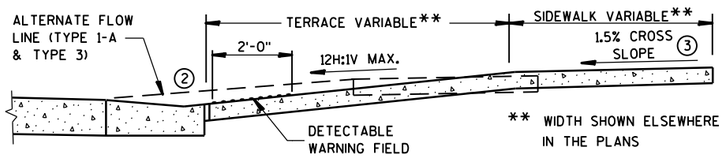

SECTION B-B

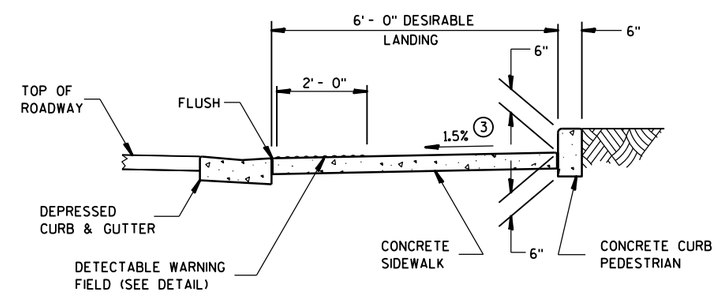

SECTION C-C

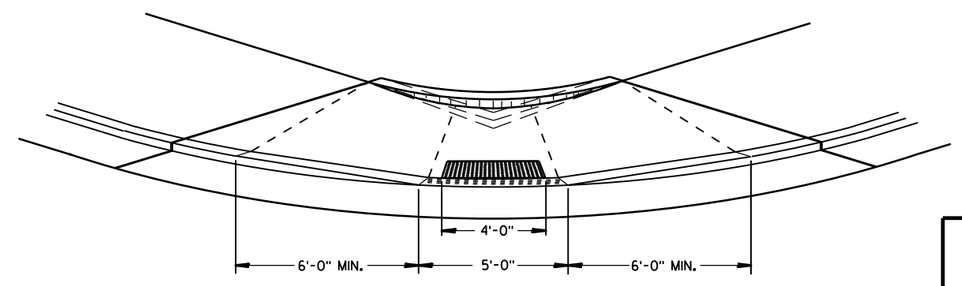

VIEW D-D

CURB RAMPS
TYPES 1 AND 1-A

STATE OF WISCONSIN
DEPARTMENT OF TRANSPORTATION

6

6

S.D.D. 8 D 5-15a

S.D.D. 8 D 5-15a

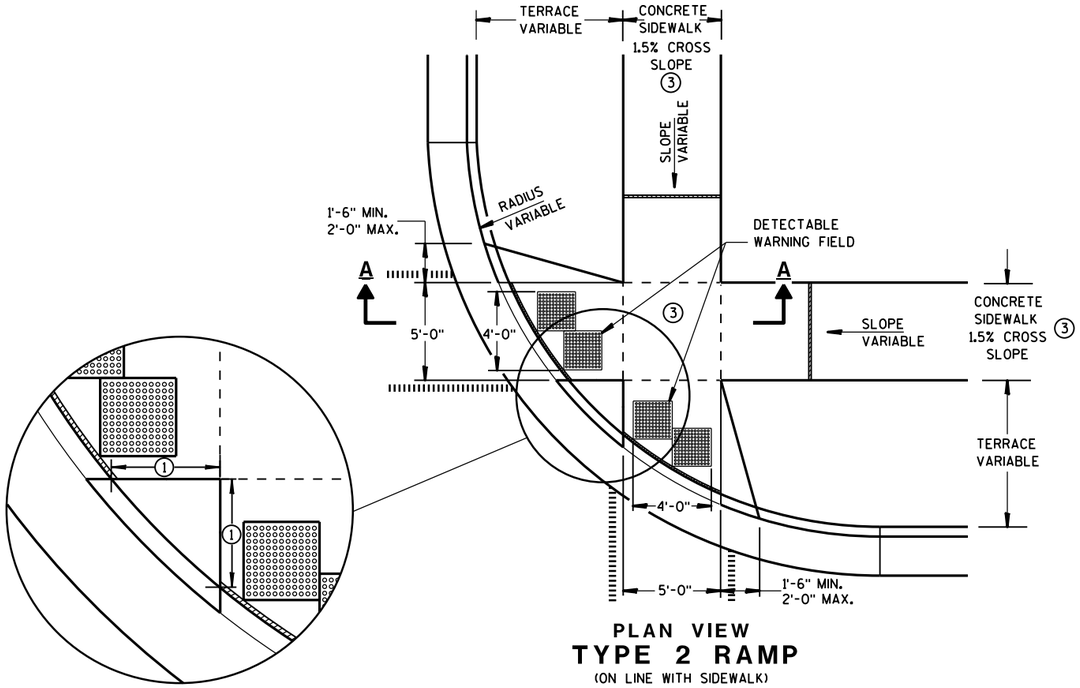

PLAN VIEW
TYPE 2 RAMP
(ON LINE WITH SIDEWALK)

GENERAL NOTES

USE THE TYPE 3 RAMP ONLY WHEN A TYPE 1 OR TYPE 2 CANNOT BE ACHIEVED BECAUSE OF FIELD CONDITIONS.

DETECTABLE WARNING FIELDS THAT ARE INSTALLED AS A GROUP OR SIDE BY SIDE, SHALL BE FROM THE SAME MANUFACTURER.

① WHEN THIS DISTANCE IS LESS THAN 6'-0" IT MAY BE DIFFICULT TO ACHIEVE A 12H:1V SLOPE, OR FLATTER, ON THE RAMP. REDUCE CURB HEIGHT IN TRIANGLE AREA TO ACHIEVE 12H:1V SLOPE, OR FLATTER, ON RAMP. 2" MINIMUM CURB HEIGHT.

② GRADE CHANGE BETWEEN GUTTER FLAG SLOPE AND THE CURB RAMP SLOPE SHALL NOT EXCEED 11%. PROVIDE DRAINAGE AWAY FROM CURB RAMP AT GUTTER FLAG INTERFACE.

③ ±0.5% CONSTRUCTION TOLERANCE IN SIDEWALK CROSS SLOPE. THE SIDEWALK CROSS SLOPE SHALL NOT EXCEED 2% WITHOUT PRIOR APPROVAL FROM THE ENGINEER.

LEGEND

- ½" EXPANSION JOINT-SIDEWALK
- CONTRACTION JOINT FIELD LOCATED
- PAVEMENT MARKING CROSSWALK (WHITE)
- ALTERNATIVE LAYOUT

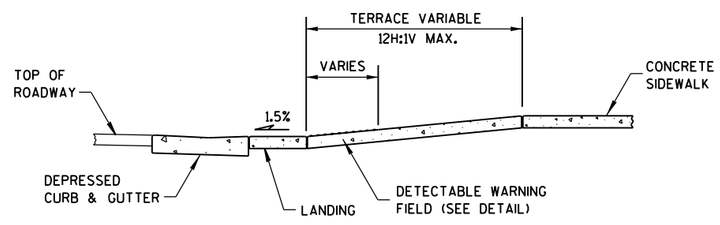

SECTION A-A

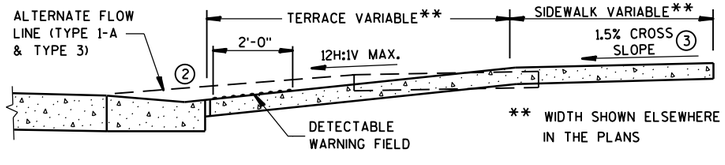

SECTION B-B

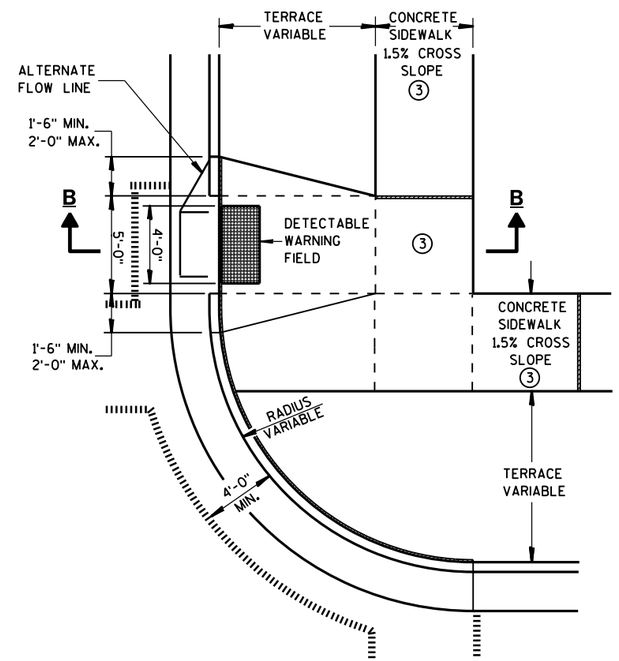

PLAN VIEW
TYPE 3 RAMP
(OUTSIDE OF CROSSWALK AREA)

6

6

CURB RAMPS
TYPES 2 AND 3

STATE OF WISCONSIN
DEPARTMENT OF TRANSPO

S.D.D. 8 D 5-15b

S.D.D. 8 D 5-15b

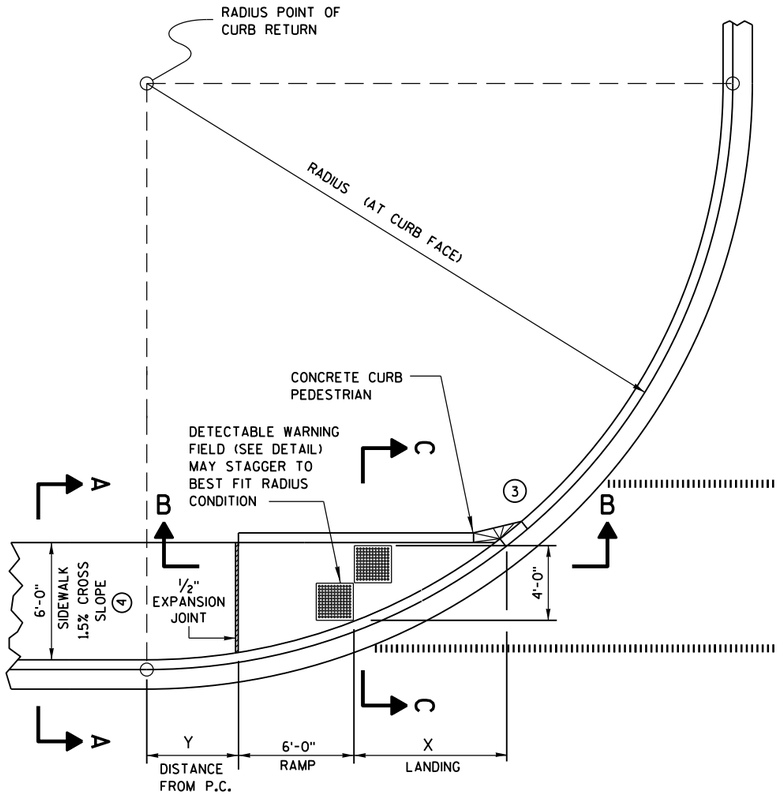

CURB RAMP TYPE 4A
PLAN VIEW

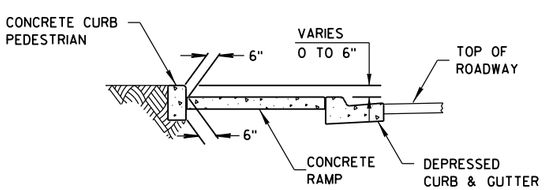

SECTION C-C FOR TYPE 4A

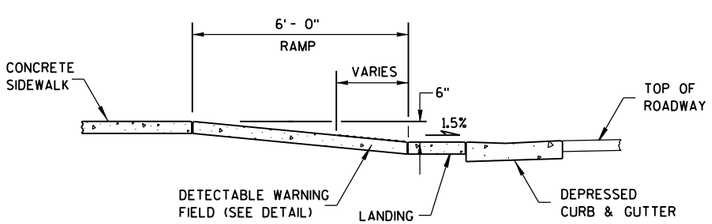

SECTION B-B FOR TYPE 4A

RADIUS (AT CURB FACE)	X	Y
20 FEET	6'-1¾"	2'-7¼"
30 FEET	7'-11¾"	4'-8¼"
40 FEET	9'-5¼"	6'-5"
50 FEET	10'-8¾"	7'-11¼"
60 FEET	11'-10¼"	9'-3½"

INTERMEDIATE RADII CAN BE INTERPOLATED

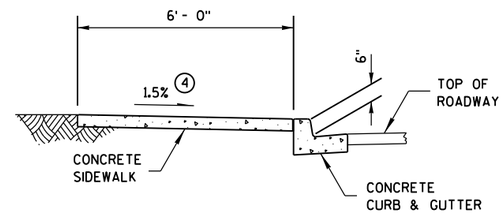

SECTION A-A FOR TYPE 4A

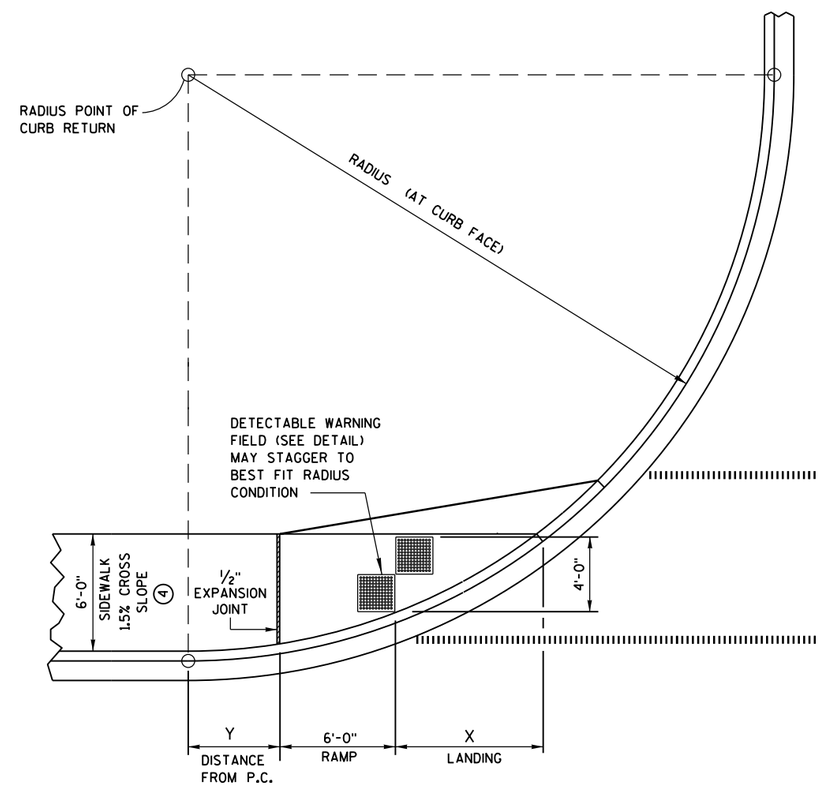

CURB RAMP TYPE 4A1
PLAN VIEW

GENERAL NOTES

AVOID PLACING DRAINAGE STRUCTURES, JUNCTION BOXES OR OTHER OBSTRUCTIONS IN FRONT OF RAMP ACCESS AREAS.

RAMP SLOPES SHALL NOT BE STEEPER THAN 12:1.

DETECTABLE WARNING FIELDS THAT ARE INSTALLED AS A GROUP OR SIDE BY SIDE, SHALL BE FROM THE SAME MANUFACTURER.

(3) INSTALL TRANSITION NOSE. (INCIDENTAL TO OTHER PAY ITEMS.) DO NOT MARK TRANSITION NOSE.

(4) ±0.5% CONSTRUCTION TOLERANCE IN SIDEWALK CROSS SLOPE. THE SIDEWALK CROSS SLOPE SHALL NOT EXCEED 2% WITHOUT PRIOR APPROVAL FROM THE ENGINEER.

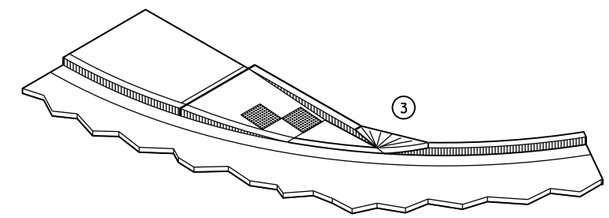

ISOMETRIC VIEW FOR TYPE 4A

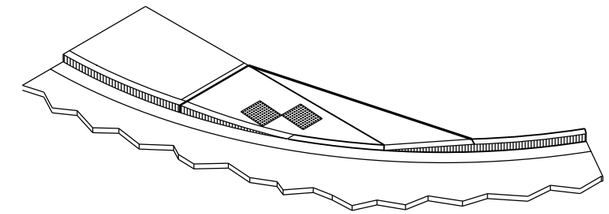

ISOMETRIC VIEW FOR TYPE 4A1

LEGEND

- ½" EXPANSION JOINT-SIDEWALK
- CONTRACTION JOINT FIELD LOCATED
- PAVEMENT MARKING CROSSWALK (WHITE)

CURB RAMPS
TYPES 4A AND 4A1

STATE OF WISCONSIN
DEPARTMENT OF TRANSPOR

6

6

S.D.D. 8 D 5-15c

S.D.D. 8 D 5-15c

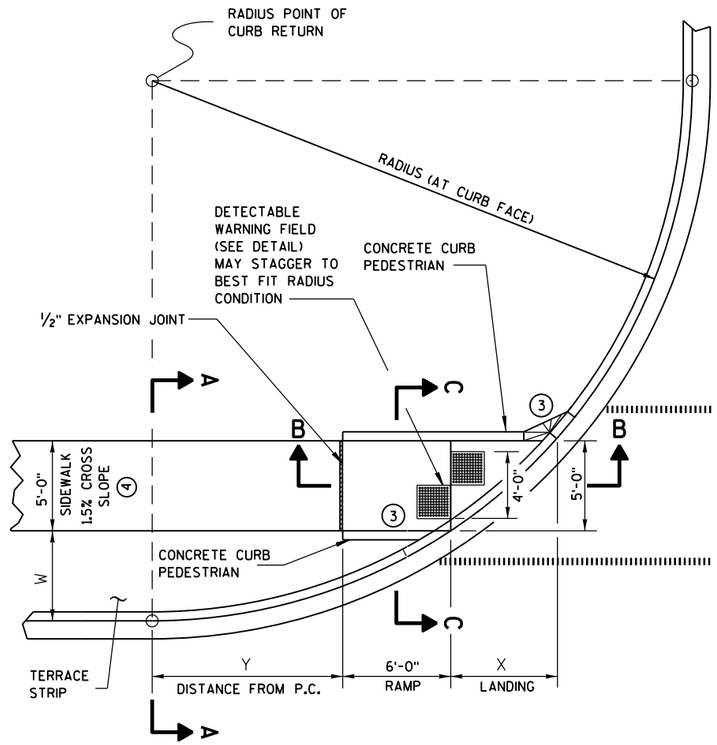

CURB RAMP TYPE 4B
PLAN VIEW

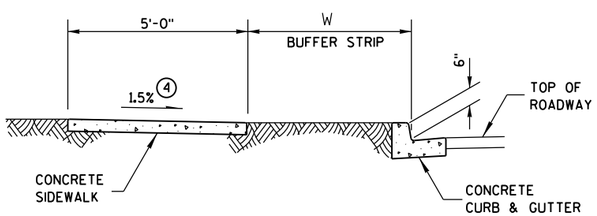

SECTION A-A FOR TYPE 4B

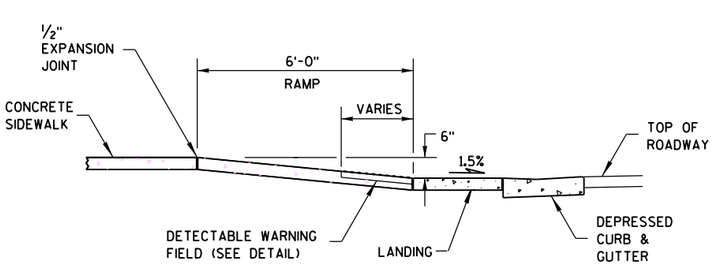

SECTION B-B FOR TYPE 4B

LEGEND

- ½" EXPANSION JOINT-SIDEWALK
- CONTRACTION JOINT FIELD LOCATED
- PAVEMENT MARKING CROSSWALK (WHITE)

RADIUS (AT CURB FACE)	W = 3' - 0"		W = 4' - 0"		W = 5' - 0"		W = 6' - 0"		W = 7' - 0"	
	X	Y	X	Y	X	Y	X	Y	X	Y
20 FEET	5'-5½"	4'-6½"	4'-8½"	6'-0"	4'-1"	7'-2¾"	3'-7"	8'-3½"	3'-1½"	9'-2½"
30 FEET	7'-3¾"	7'-1"	6'-5½"	8'-11½"	5'-9¼"	10'-7"	5'-2½"	12'-0"	4'-8¾"	13'-3¼"
40 FEET	8'-9½"	9'-2½"	7'-10"	11'-5¼"	7'-1"	13'-4½"	6'-5¾"	15'-¾"	5'-11½"	16'-7¼"
50 FEET	10'-¾"	11'-¾"	9'-¼"	13'-7¼"	8'-2½"	15'-9½"	7'-6½"	17'-9"	6'-11¾"	19'-6¼"
60 FEET	11'-2½"	12'-8¾"	10'-¾"	15'-6½"	9'-2¼"	17'-11¾"	8'-5¾"	20'-1¾"	7'-10½"	22'-1½"

INTERMEDIATE RADII CAN BE INTERPOLATED

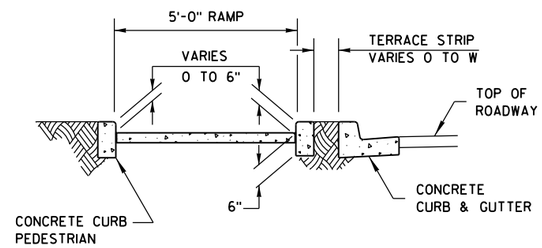

SECTION C-C FOR TYPE 4B

GENERAL NOTES

AVOID PLACING DRAINAGE STRUCTURES, JUNCTION BOXES OR OTHER OBSTRUCTIONS IN FRONT OF RAMP ACCESS AREAS.

RAMP SLOPES SHALL NOT BE STEEPER THAN 12:1.

DETECTABLE WARNING FIELDS THAT ARE INSTALLED AS A GROUP OR SIDE BY SIDE, SHALL BE FROM THE SAME MANUFACTURER.

(3) INSTALL TRANSITION NOSE. (INCIDENTAL TO OTHER PAY ITEMS.) DO NOT MARK TRANSITION NOSE.

(4) ±0.5% CONSTRUCTION TOLERANCE IN SIDEWALK CROSS SLOPE. THE SIDEWALK CROSS SLOPE SHALL NOT EXCEED 2% WITHOUT PRIOR APPROVAL FROM THE ENGINEER.

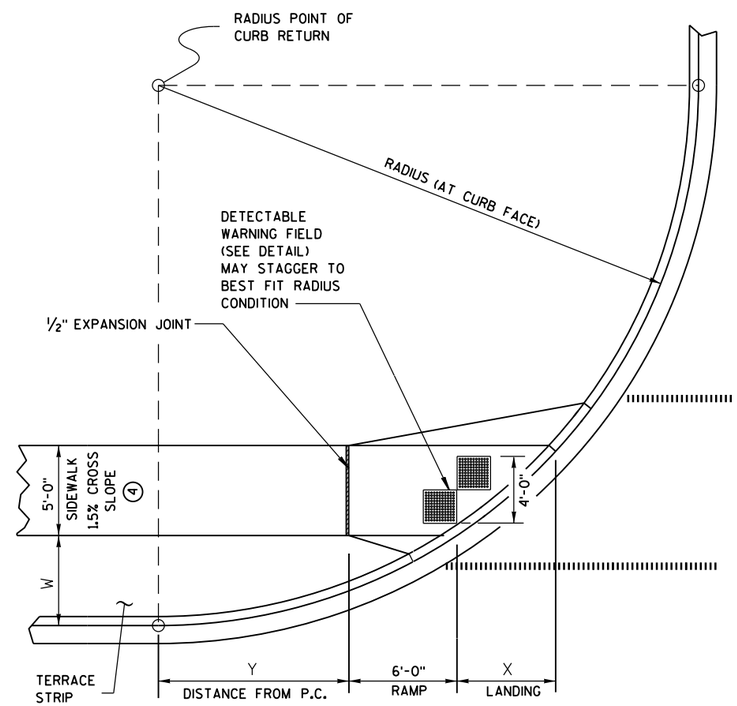

CURB RAMP TYPE 4B1
PLAN VIEW

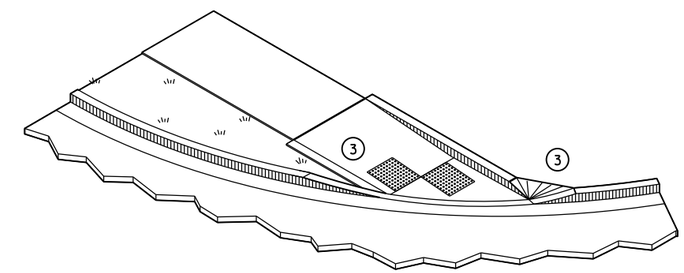

ISOMETRIC VIEW FOR TYPE 4B

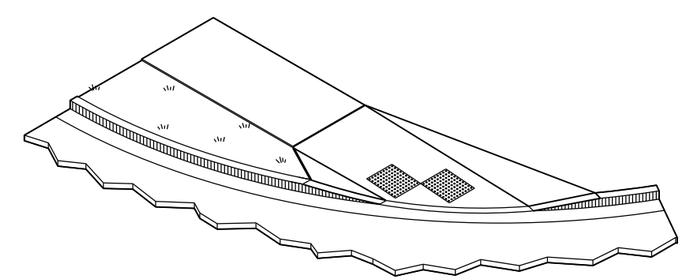

ISOMETRIC VIEW FOR TYPE 4B1

CURB RAMPS
TYPE 4B AND 4B1

STATE OF WISCONSIN
DEPARTMENT OF TRANSPOR

6

S.D.D. 8 D 5-15d

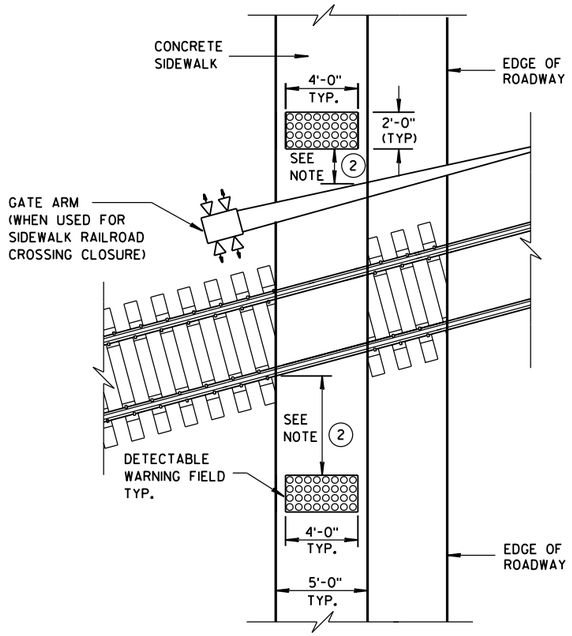

TYPE 8
DETECTABLE WARNINGS AT RAILROAD CROSSING

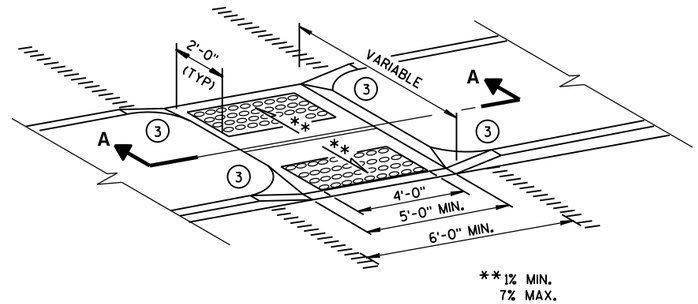

MEDIAN ISLAND
NON-ELEVATED CROSSING
TYPE 5

GENERAL NOTES

SIDEWALK CROSS SLOPE SHALL NOT EXCEED 2%.

DETECTABLE WARNING FIELDS THAT ARE INSTALLED AS A GROUP OR SIDE BY SIDE, SHALL BE FROM THE SAME MANUFACTURER.

1. SLOPE SIDEWALK TOWARD LANDING AS SHOWN WHERE THERE IS NO TERRACE OR WHERE THE TERRACE WIDTH IS LESS THAN 6 FEET WIDE.
2. THE EDGE OF THE DETECTABLE WARNING FIELD NEAREST TO A RAILROAD CROSSING SHALL BE 1.5 FEET ± 0.1' FROM THE FACE OF THE GATE ARM IF THE GATE ARM EXTENDS ACROSS THE SIDEWALK. WHERE THERE IS NO PEDESTRIAN GATE, THE EDGE OF THE DETECTABLE WARNING FIELD NEAREST TO THE RAILROAD CROSSING SHALL BE 15 FEET FROM THE NEAREST RAIL.
3. INSTALL TRANSITION NOSE. (INCIDENTAL TO OTHER PAY ITEMS.) DO NOT MARK TRANSITION NOSE.
4. ±0.5% CONSTRUCTION TOLERANCE IN SIDEWALK CROSS SLOPE. THE SIDEWALK CROSS SLOPE SHALL NOT EXCEED 2% WITHOUT PRIOR APPROVAL FROM THE ENGINEER.

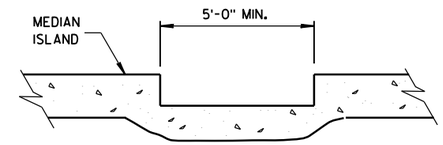

SECTION A-A

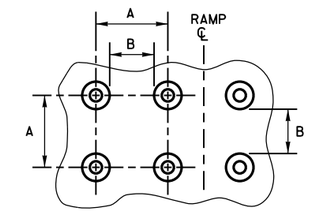

PLAN VIEW

	MIN.	MAX.
A	1.6"	2.4"
B	0.65"	1.5"
C	*	*
D	0.9"	1.4"

* THE C DIMENSION IS 50% TO 65% OF THE D DIMENSION.

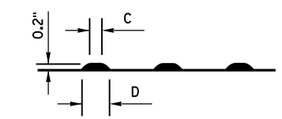

ELEVATION VIEW

TRUNCATED DOMES
DETECTABLE WARNING PATTERN DETAIL

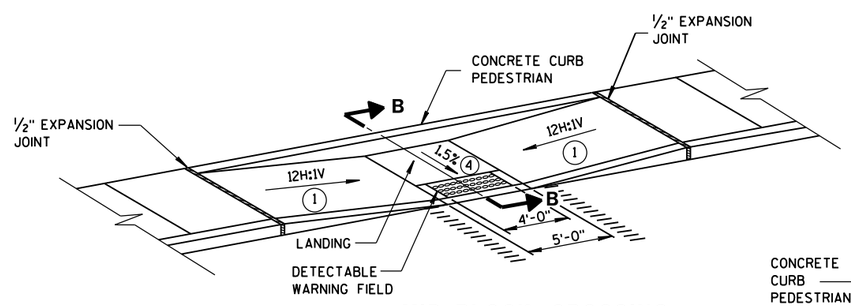

MID-BLOCK CROSSING
TYPE 7A

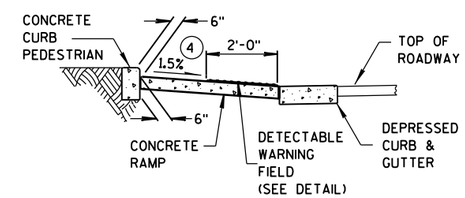

SECTION B-B

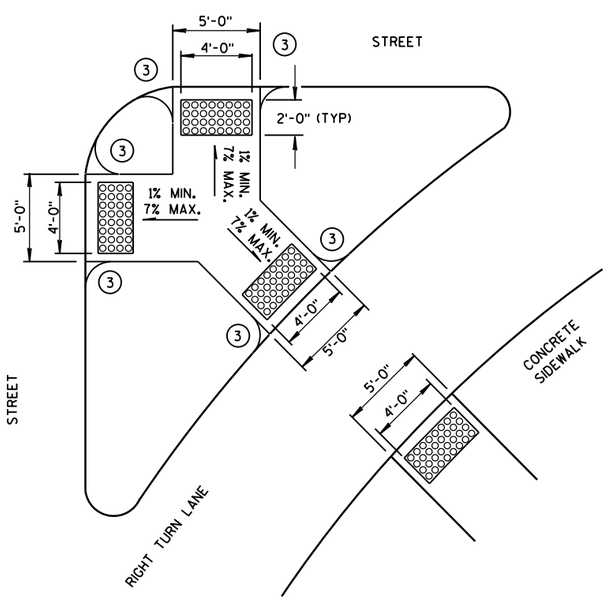

TYPE 6
DETECTABLE WARNING AT ISLANDS

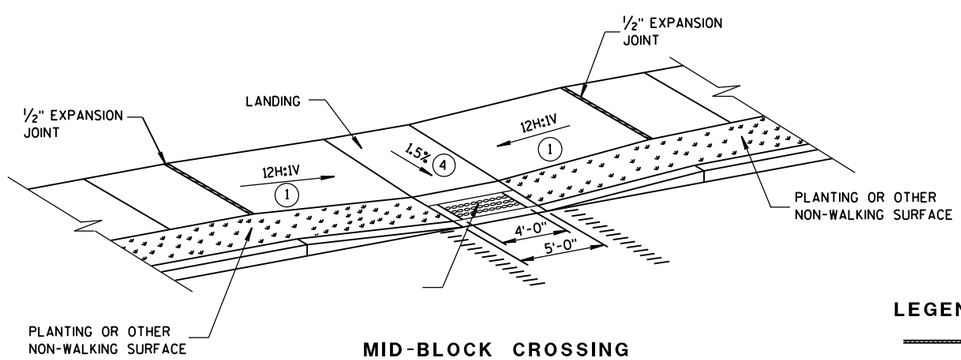

MID-BLOCK CROSSING
TYPE 7B

NOTE: THESE PARALLEL AND PARALLEL/PERPENDICULAR CURB RAMPS MAY BE USED AT INTERSECTIONS AND MID BLOCK LOCATIONS.

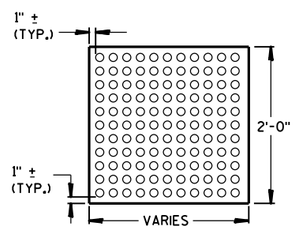

PLAN VIEW
DETECTABLE WARNING FIELD (TYPICAL)

LEGEND

- ½" EXPANSION JOINT-SIDEWALK
- CONTRACTION JOINT FIELD LOCATED
- PAVEMENT MARKING CROSSWALK (WHITE)

CURB RAMPS
TYPES 5, 6, 7A, 7B & 8

STATE OF WISCONSIN
DEPARTMENT OF TRANSPORTATION

APPROVED
2-6-2013 — DATE
/S/ Jerry H. Zogg — ROADWAY STANDARDS DEVELOPMENT ENGINEER
FHWA

6

6

S.D.D. 8 D 5-15e

S.D.D. 8 D 5-15e

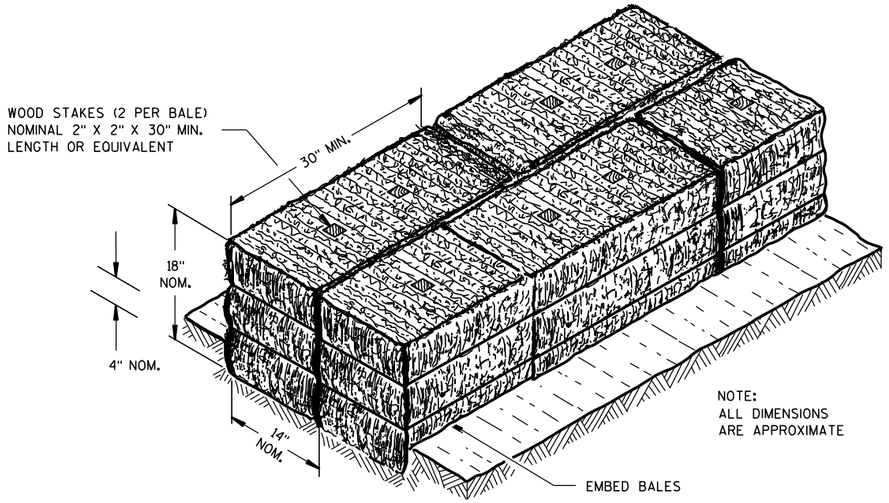

SECTION A-A

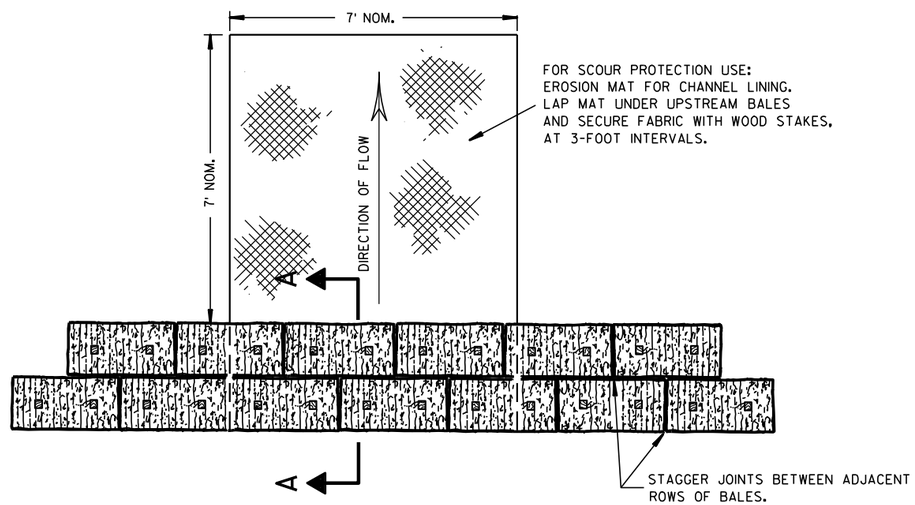

PLAN VIEW

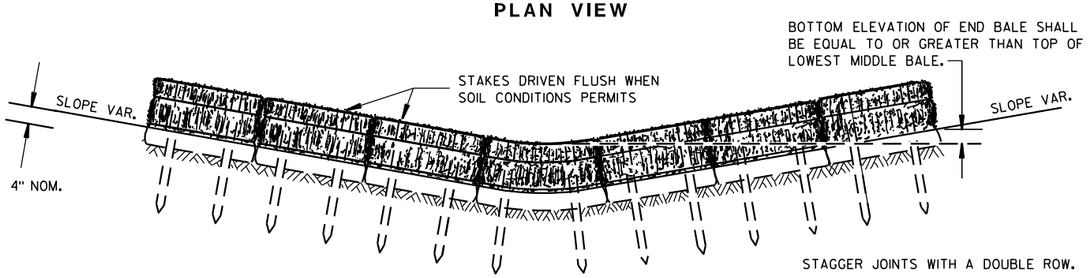

FRONT ELEVATION

TEMPORARY DITCH CHECK USING EROSION BALES ①

GENERAL NOTES

DETAILS OF CONSTRUCTION, MATERIALS AND WORKMANSHIP NOT SHOWN ON THIS DRAWING SHALL CONFORM TO THE PERTINENT REQUIREMENTS OF THE STANDARD SPECIFICATIONS AND THE APPLICABLE SPECIAL PROVISIONS.

① TEMPORARY DITCH CHECKS EITHER EROSION BALES OR MANUFACTURED SHALL BE PAID FOR UNDER THE BID ITEM OF TEMPORARY DITCH CHECK. THE DEPARTMENT WILL NOT PAY FOR TEMPORARY DITCH CHECKS CONSTRUCTED OF A SINGLE ROW OF EROSION BALES.

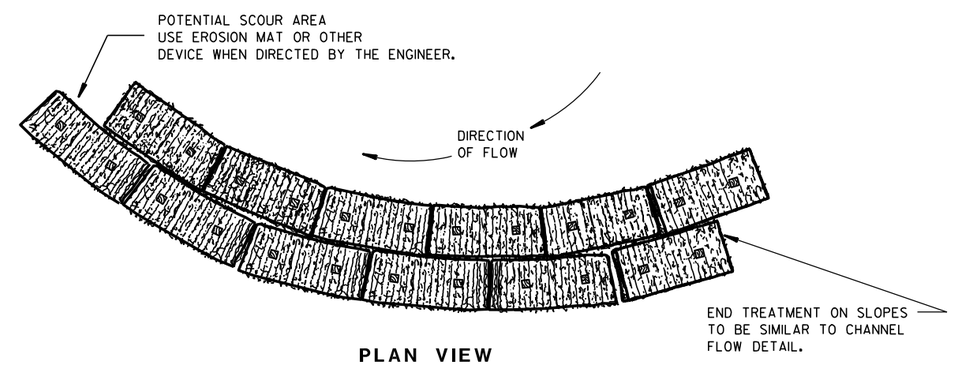

PLAN VIEW

WHEN ALTERING THE DIRECTION OF FLOW

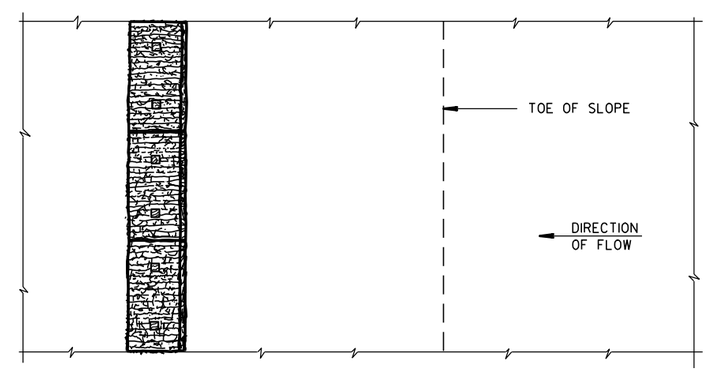

PLAN VIEW

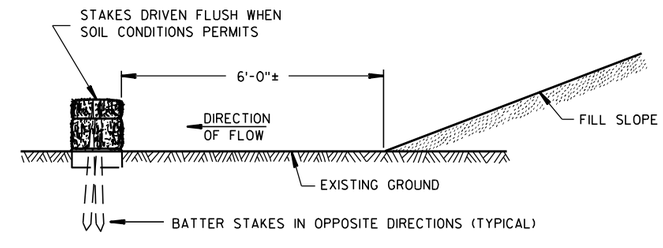

FRONT ELEVATION

WHEN EXISTING GROUND SLOPES AWAY FROM FILL SLOPE

EROSION BALES FOR SHEET FLOW

TYPICAL INSTALLATIONS OF EROSION BALES / TEMPORARY DITCH CHECKS

STATE OF WISCONSIN
DEPARTMENT OF TRANSPORTATION

APPROVED

6/04/02 — DATE

/S/ Beth Cann — CHIEF ROADWAY DEVELOPMENT ENGINEER

FHWA

6

6

S.D.D. 8 E 8-3

S.D.D. 8 E 8-3

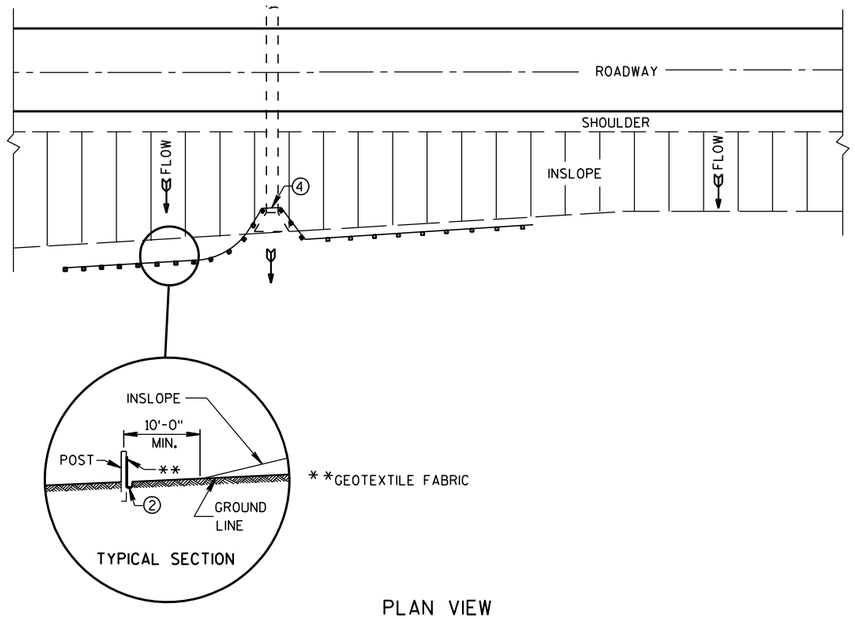

PLAN VIEW

TYPICAL APPLICATION OF SILT FENCE

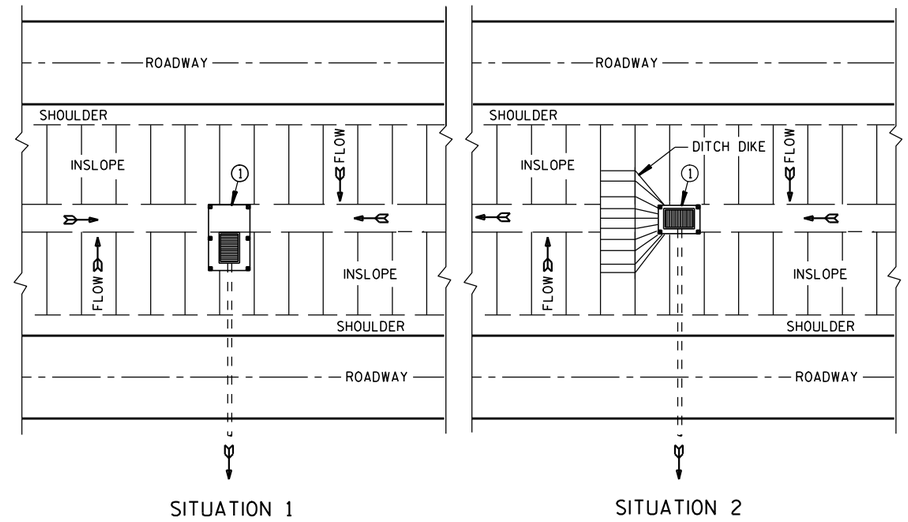

PLAN VIEW

SILT FENCE AT MEDIAN SURFACE DRAINS

GENERAL NOTES

DETAILS OF CONSTRUCTION NOT SHOWN ON THIS DRAWING SHALL CONFORM TO THE PERTINENT REQUIREMENTS OF THE STANDARD SPECIFICATIONS AND APPLICABLE SPECIAL PROVISIONS.

① HORIZONTAL BRACE REQUIRED WITH 2" X 4" WOODEN FRAME OR EQUIVALENT AT TOP OF POSTS.

② FOR MANUAL INSTALLATIONS THE TRENCH SHALL BE A MINIMUM OF 4" WIDE & 6" DEEP TO BURY AND ANCHOR THE GEOTEXTILE FABRIC. FOLD MATERIAL TO FIT TRENCH AND BACKFILL & COMPACT TRENCH WITH EXCAVATED SOIL.

③ WOOD POSTS SHALL BE A MINIMUM SIZE OF 1⅛" X 1⅛" OF OAK OR HICKORY.

④ SILT FENCE TO EXTEND ACROSS THE TOP OF THE PIPE.

⑤ CONSTRUCT SILT FENCE FROM A CONTINUOUS ROLL IF POSSIBLE BY CUTTING LENGTHS TO AVOID JOINTS. IF A JOINT IS NECESSARY USE ONE OF THE FOLLOWING TWO METHODS; A) OVERLAP THE END POSTS AND TWIST, OR ROTATE, AT LEAST 180 DEGREES. B) HOOK THE END OF EACH SILT FENCE LENGTH.

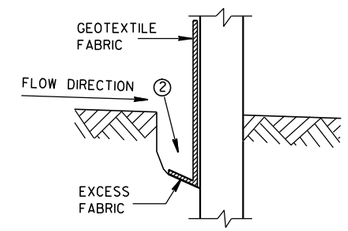

TRENCH DETAIL

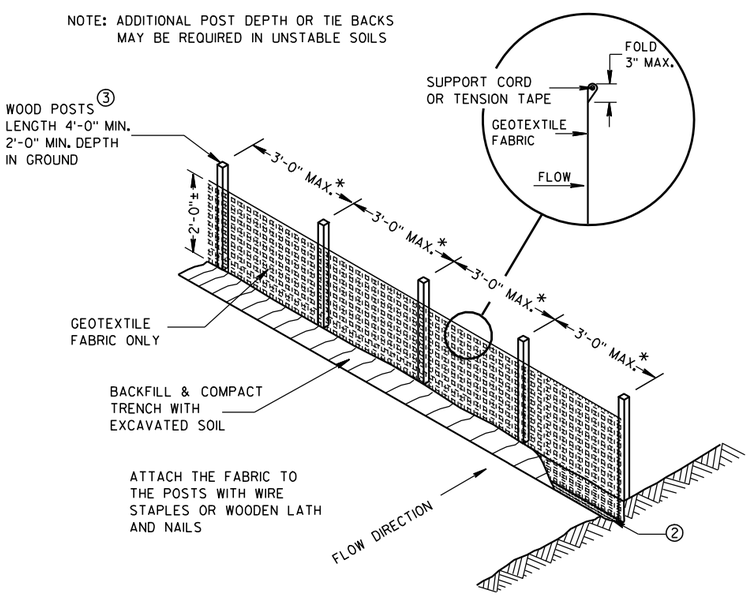

*NOTE: 8'-0" POST SPACING ALLOWED IF A WOVEN GEOTEXTILE FABRIC IS USED.

SILT FENCE

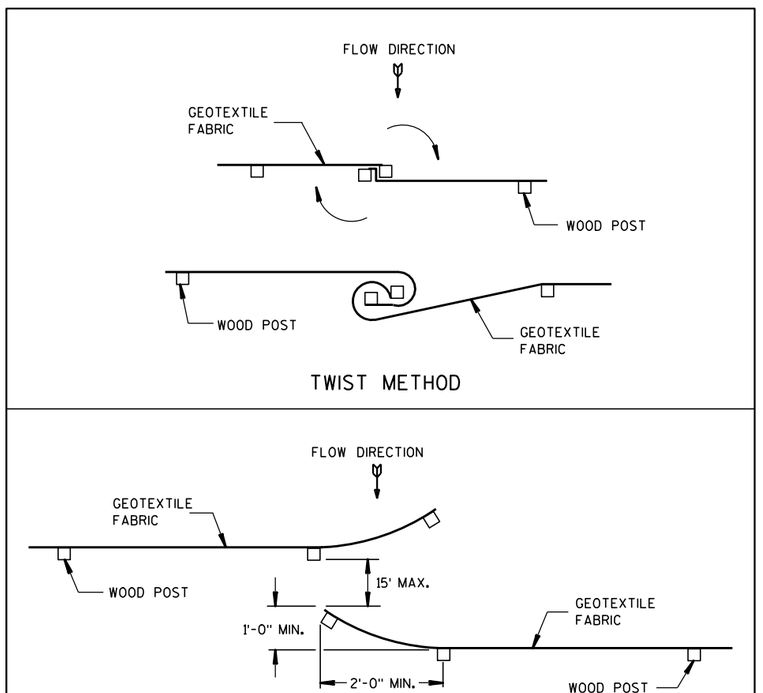

JOINING TWO LENGTHS OF SILT FENCE ⑤

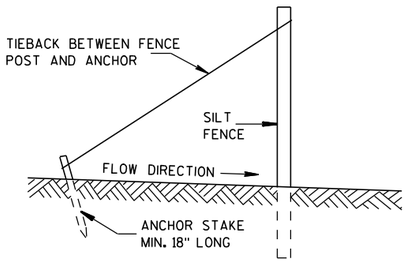

SILT FENCE TIE BACK

(WHEN REQUIRED BY THE ENGINEER)

SILT FENCE	
STATE OF WISCONSIN DEPARTMENT OF TRANSPORTATION	
APPROVED 4-29-05 DATE	/S/ Beth Cann-- CHIEF ROADWAY DEVELOP ENGINEER
FHWA	

6

6

S.D.D. 8 E 9-6

S.D.D. 8 E 9-6

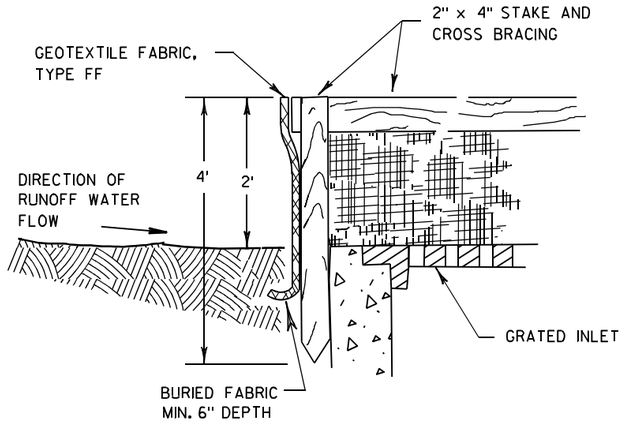

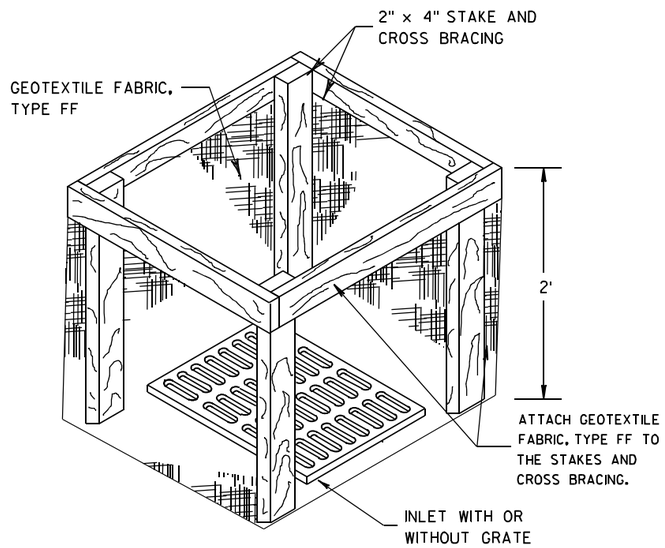

INLET PROTECTION, TYPE A

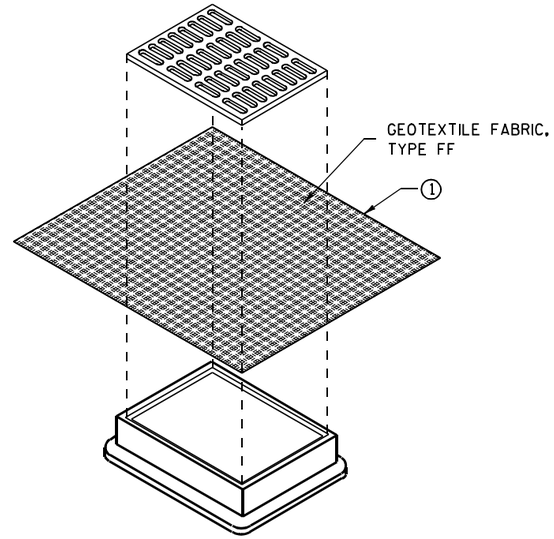

INLET PROTECTION, TYPE B (WITHOUT CURB BOX)

(CAN BE INSTALLED IN ANY INLET WITHOUT A CURB BOX)

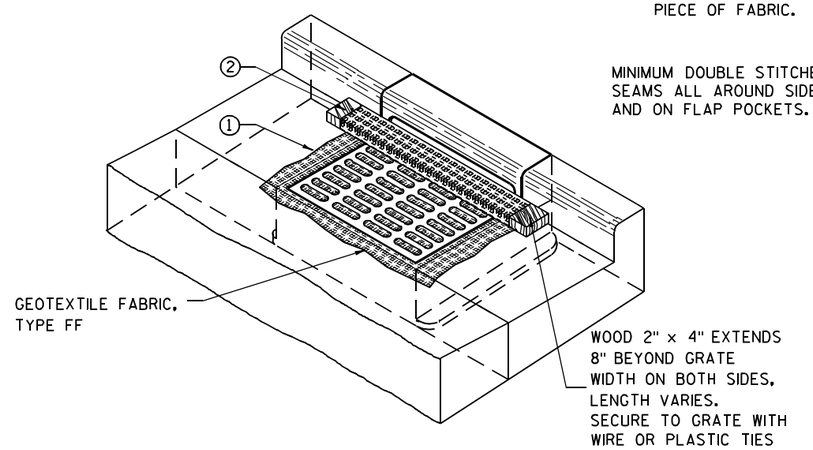

INLET PROTECTION, TYPE C (WITH CURB BOX)

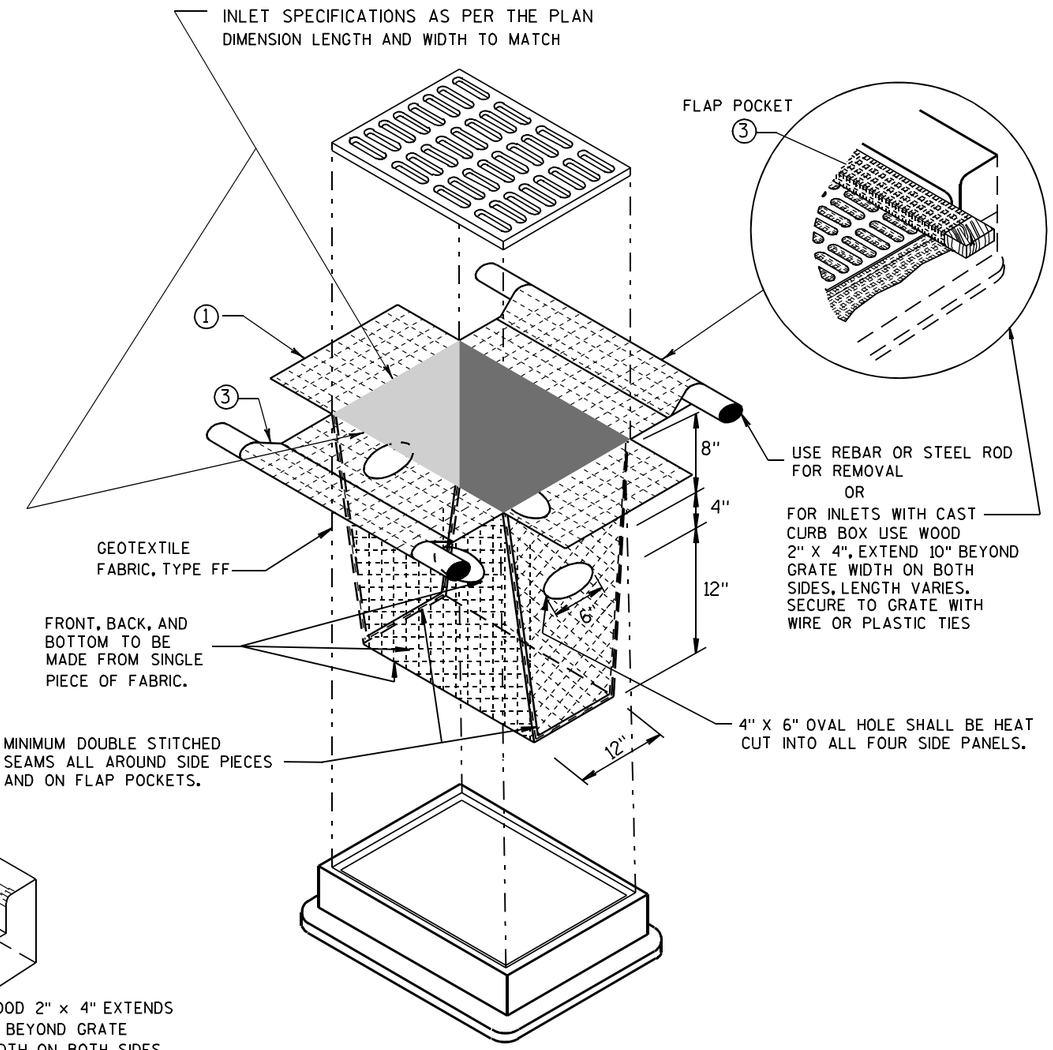

INLET PROTECTION, TYPE D

(CAN BE INSTALLED IN ANY INLET TYPE WITH OR WITHOUT A CURB BOX AS PER NOTE 2)

GENERAL NOTES

INLET PROTECTION DEVICES SHALL BE MAINTAINED OR REPLACED AT THE DIRECTION OF THE ENGINEER.

MANUFACTURED ALTERNATIVES APPROVED AND LISTED ON THE DEPARTMENT'S EROSION CONTROL PRODUCT ACCEPTABILITY LIST MAY BE SUBSTITUTED.

WHEN REMOVING OR MAINTAINING INLET PROTECTION, CARE SHALL BE TAKEN SO THAT THE SEDIMENT TRAPPED ON THE GEOTEXTILE FABRIC DOES NOT FALL INTO THE INLET. ANY MATERIAL FALLING INTO THE INLET SHALL BE REMOVED IMMEDIATELY.

1. FINISHED SIZE, INCLUDING FLAP POCKETS WHERE REQUIRED, SHALL EXTEND A MINIMUM OF 10" AROUND THE PERIMETER TO FACILITATE MAINTENANCE OR REMOVAL.
2. FOR INLET PROTECTION, TYPE C (WITH CURB BOX), AN ADDITIONAL 18" OF FABRIC IS WRAPPED AROUND THE WOOD AND SECURED WITH STAPLES. THE WOOD SHALL NOT BLOCK THE ENTIRE HEIGHT OF THE CURB BOX OPENING.
3. FLAP POCKETS SHALL BE LARGE ENOUGH TO ACCEPT WOOD 2X4.

INSTALLATION NOTES

TYPE B & C

TRIM EXCESS FABRIC IN THE FLOW LINE TO WITHIN 3" OF THE GRATE.

THE CONTRACTOR SHALL DEMONSTRATE A METHOD OF MAINTENANCE, USING A SEWN FLAP, HAND HOLDS OR OTHER METHOD TO PREVENT ACCUMULATED SEDIMENT FROM ENTERING THE INLET.

TYPE D

DO NOT INSTALL INLET PROTECTION TYPE D IN INLETS SHALLOWER THAN 30", MEASURED FROM THE BOTTOM OF THE INLET TO THE TOP OF THE GRATE.

TRIM EXCESS FABRIC IN THE FLOW LINE TO WITHIN 3" OF THE GRATE.

THE INSTALLED BAG SHALL HAVE A MINIMUM SIDE CLEARANCE, BETWEEN THE INLET WALLS AND THE BAG, MEASURED AT THE BOTTOM OF THE OVERFLOW HOLES, OF 3". WHERE NECESSARY THE CONTRACTOR SHALL CINCH THE BAG, USING PLASTIC ZIP TIES, TO ACHIEVE THE 3" CLEARANCE. THE TIES SHALL BE PLACED AT A MAXIMUM OF 4" FROM THE BOTTOM OF THE BAG.

INLET PROTECTION TYPE A, B, C, AND D

STATE OF WISCONSIN
DEPARTMENT OF TRANSPORTATION

APPROVED
10/16/02 — DATE
/S/ Beth Cannatine
CHIEF ROADWAY DEVELOPMENT ENGINEER
FHWA

6

S.D.D. 8 E 10-2

METAL APRON ENDWALLS

PIPE DIA. (IN.)	MIN. THICK. (Inches) STEEL	MIN. THICK. (Inches) ALUM.	DIMENSIONS (Inches) A (±1")	B (MAX.)	H (±1")	L (±1 1/2")	L1 ①	L2 ①	W (±2")	APPROX. SLOPE	BODY
12	.064	.060	6	6	6	21	12	17 1/2	24	2 1/2 to 1	1 Pc.
15	.064	.060	7	8	6	26	14	21 3/4	30	2 1/2 to 1	1 Pc.
18	.064	.060	8	10	6	31	15	28 1/4	36	2 1/2 to 1	1 Pc.
21	.064	.060	9	12	6	36	18	29 5/8	42	2 1/2 to 1	1 Pc.
24	.064	.075	10	13	6	41	18	37 1/4	48	2 1/2 to 1	1 Pc.
30	.079	.075	12	16	8	51	18	52 1/4	60	2 1/2 to 1	1 Pc.
36	.079	.105	14	19	9	60	24	59 3/4	72	2 1/2 to 1	2 Pc.
42	.109	.105	16	22	11	69	24	75 5/8	84	2 1/2 to 1	2 Pc.
48	.109	.105	18	27	12	78	24	81	90	2 1/4 to 1	3 Pc.
54	.109	.105	18	30	12	84	30	85 1/2	102	2 1/4 to 1	3 Pc.
60	.109×	.105×	18	33	12	87	—	—	114	2 to 1	3 Pc.
66	.109×	.105×	18	36	12	87	—	—	120	2 to 1	3 Pc.
72	.109×	.105×	18	39	12	87	—	—	126	2 to 1	3 Pc.
78	.109×	.105×	18	42	12	87	—	—	132	1 1/2 to 1	3 Pc.
84	.109×	.105×	18	45	12	87	—	—	138	1 1/2 to 1	3 Pc.
90	.109×	.105×	18	37	12	87	—	—	144	1 1/2 to 1	3 Pc.
96	.109×	.105×	18	35	12	87	—	—	150	1 1/2 to 1	3 Pc.

× EXCEPT CENTER PANEL
SEE GENERAL NOTES

REINFORCED CONCRETE APRON ENDWALLS

PIPE DIA. (IN.)	DIMENSIONS (Inches) T	A	B	C	D	E	G	APPROX. SLOPE
12	2	4	24	48 7/8	72 7/8	24	2	3 to 1
15	2 1/4	6	27	46	73	30	2 1/4	3 to 1
18	2 1/2	9	27	46	73	36	2 1/2	3 to 1
21	2 3/4	9	36	37 1/2	73 1/2	42	2 3/4	3 to 1
24	3	9 1/2	43 1/2	30	73 1/2	48	3	3 to 1
27	3 1/4	10 1/2	49 1/2	24	73 1/2	54	3 1/4	3 to 1
30	3 1/2	12	54	19 3/4	73 1/2	60	3 1/2	3 to 1
36	4	15	63	34 3/4	97 3/4	72	4	3 to 1
42	4 1/2	21	63	35	98	78	4 1/2	3 to 1
48	5	24	72	26	98	84	5	3 to 1
54	5 1/2	27	65	*33 1/4-**35	*98 1/4-**100	90	5 1/2	2 2/5 to 1
60	6	*30-**35	60	39	99	96	5	2 to 1
66	6 1/2	*24-**30	*72-**78	*21-**27	99	102	5 1/2	2 to 1
72	7	*24-**36	78	21	99	108	6	2 to 1
78	7 1/2	*24-**36	78	21	99	114	6 1/2	2 to 1
84	8	36	90 1/2	21	111 1/2	120	6 1/2	1 1/2 to 1
90	8 1/2	41	87 1/2	24	111 1/2	132	6 1/2	1 1/2 to 1

*MINIMUM
**MAXIMUM

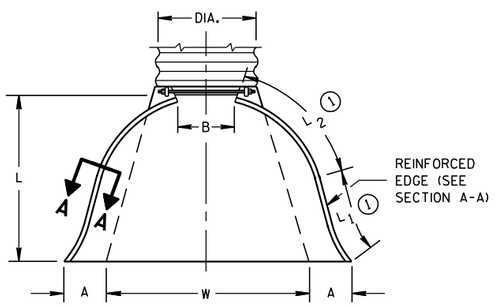

PLAN VIEW

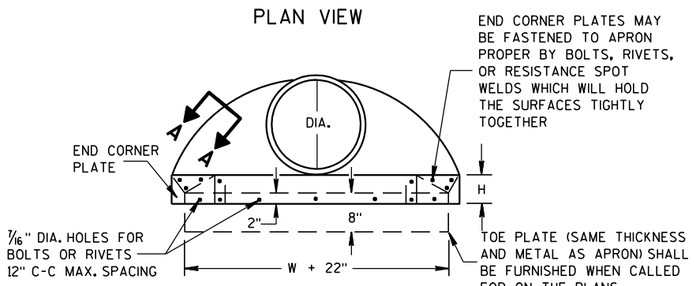

END VIEW

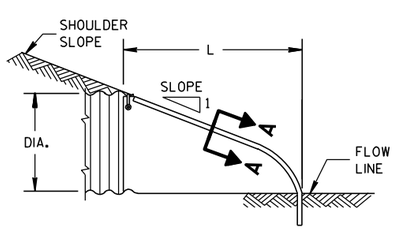

SIDE ELEVATION

METAL ENDWALLS

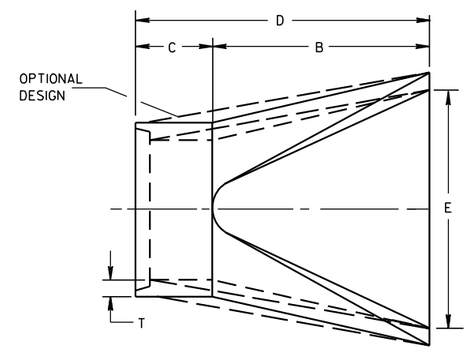

PLAN

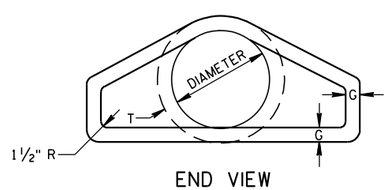

END VIEW

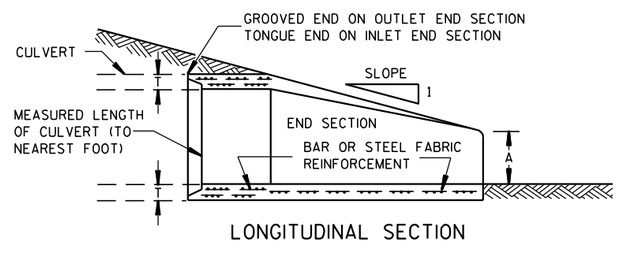

LONGITUDINAL SECTION

CONCRETE ENDWALLS

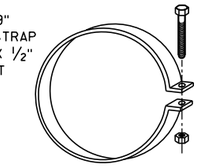

ALTERNATE FOR TYPE 1 CONNECTION

END SECTION CONNECTOR STRAP

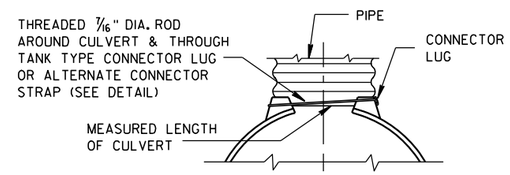

TYPE 1
FOR 12" THRU 24" CORR. PIPE

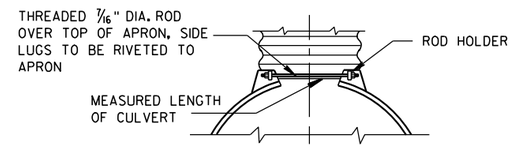

TYPE 2
FOR 30" THRU 96" CORR. PIPE

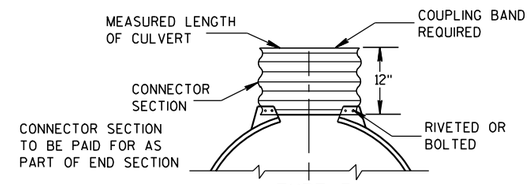

TYPE 3
FOR 42" THRU 96" CORR. PIPE

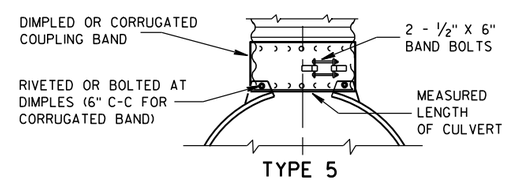

TYPE 5
ALTERNATE FOR:
ALL SIZES CORRUGATED CIRCULAR PIPE

NOTE: DIMPLED BAND FITS OVER OUTSIDE OF ENDWALL, AND CORRUGATED BAND FITS INSIDE ENDWALL. DIMPLED BAND MAY BE USED WITH HELICALLY CORRUGATED PIPE.

FOR CIRCUMFERENTIALLY CORRUGATED PIPE USE ENDWALL CONNECTION DETAILS 1, 2, 3 OR 5 AS APPLICABLE.

FOR HELICALLY CORRUGATED PIPE USE ENDWALL CONNECTION DETAILS 1, 2 OR 5.

FOR HELICALLY CORRUGATED PIPES WITH TWO CIRCUMFERENTIAL CORRUGATIONS AT EACH END USE ENDWALL CONNECTION DETAILS 1, 2 OR 3.

CONNECTION DETAILS

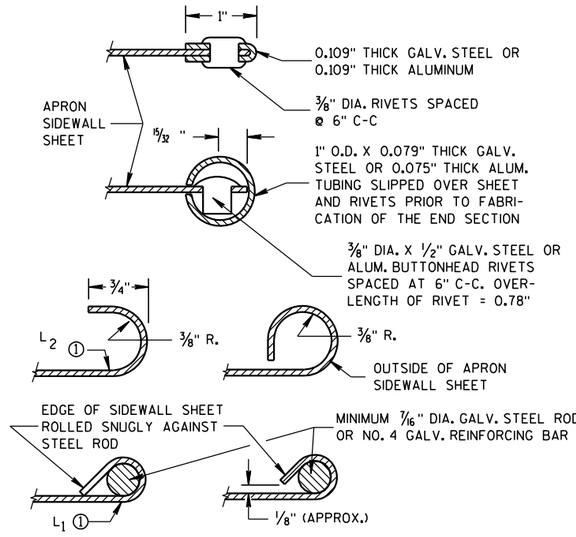

SECTION A-A

GENERAL NOTES

DETAILS OF CONSTRUCTION, MATERIALS AND WORKMANSHIP NOT SHOWN ON THIS DRAWING SHALL CONFORM TO THE PERTINENT REQUIREMENTS OF THE STANDARD SPECIFICATIONS AND THE APPLICABLE SPECIAL PROVISIONS.

CONCRETE CULVERT ENDWALLS MAY NOT BE USED WITH GALVANIZED STEEL OR ALUMINUM CULVERT PIPE OR VISE VERSA. GALVANIZED STEEL OR ALUMINUM ENDWALLS SHALL NORMALLY BE INSTALLED ON CULVERT PIPE OF THE SAME METAL.

ALL THREE PIECE STEEL APRON ENDWALLS FOR 60" DIAMETER PIPE AND LARGER SHALL HAVE 0.109" SIDES AND 0.138" CENTER PANELS. ALL THREE PIECE ALUMINUM APRON ENDWALLS FOR 60" DIAMETER PIPE AND LARGER SHALL HAVE 0.105" SIDES AND 0.134" CENTER PANELS. THE WIDTH OF CENTER PANELS SHALL BE GREATER THAN 20 PERCENT OF THE PIPE PERIMETER.

LAP SEAMS SHALL BE TIGHTLY JOINED BY GALVANIZED RIVETS OR BOLTS FOR STEEL UNITS AND ALUMINUM RIVETS AND BOLTS FOR ALUMINUM UNITS. FOR THE 60" THROUGH 96" DIAMETER APRON ENDWALL SIZES, THE REINFORCED EDGES AND CENTER PANEL SEAMS SHALL BE FURTHER REINFORCED WITH GALVANIZED STEEL OR ALUMINUM STIFFENER ANGLES. THE ANGLES SHALL BE ATTACHED BY GALVANIZED NUTS AND BOLTS FOR STEEL UNITS AND ALUMINUM NUTS AND BOLTS FOR ALUMINUM UNITS.

WHERE TWO OR MORE PIPES WITH APRON ENDWALLS ARE LAID ADJACENT TO EACH OTHER, THEY SHALL BE SEPARATED BY A DISTANCE SUFFICIENT TO PROVIDE A MINIMUM CLEARANCE OF 6 INCHES BETWEEN APRON ENDWALLS.

① FOR PIPE SIZES UP TO 60" DIAMETER, A 180° ROLLED EDGE MAY BE USED INSTEAD OF STEEL ROD REINFORCEMENT. SEE SECTION A-A.

APRON ENDWALLS FOR CULVERT PIPE

STATE OF WISCONSIN
DEPARTMENT OF TRANSPORTATION

APPROVED
11/30/94 — DATE
/S/ Rory L. Rhinesmith — CHIEF ROADWAY DEVELOPMENT ENGINEER
FHWA

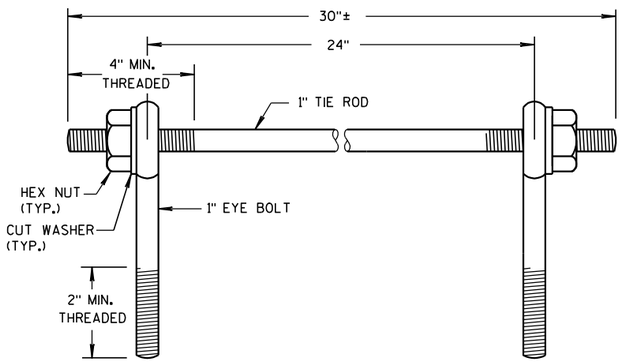

EYE BOLTS AND TIE ROD

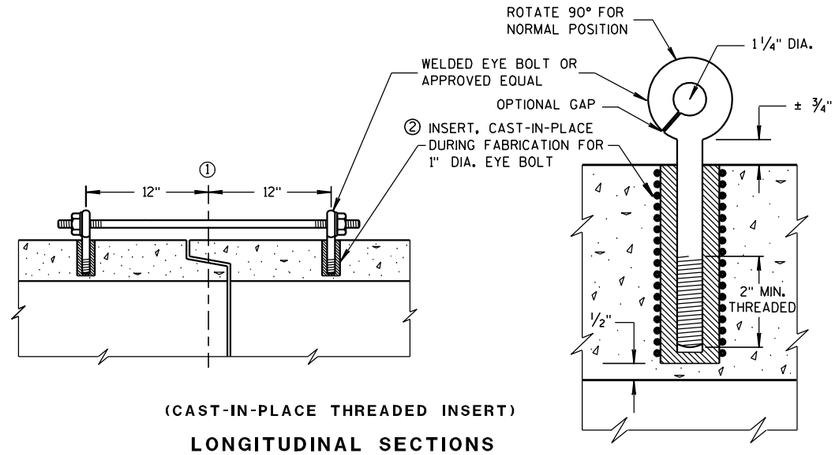

(CAST-IN-PLACE THREADED INSERT)

LONGITUDINAL SECTIONS

EYE BOLT AND TIE ROD ASSEMBLY (ALTERNATE NO. 1)

GENERAL NOTES

DETAILS OF CONSTRUCTION, MATERIALS, AND WORKMANSHIP NOT SHOWN ON THIS DRAWING SHALL CONFORM TO THE PERTINENT REQUIREMENTS OF THE STANDARD SPECIFICATIONS AND APPLICABLE SPECIAL PROVISIONS.

CONCRETE CULVERT AND STORM SEWER PIPE SHALL BE TIED TOGETHER IN THE MANNER ILLUSTRATED BY THIS DETAIL AT LOCATIONS DESIGNATED IN THE STANDARD SPECIFICATIONS AND THE PLAN. THE CONTRACTOR MAY USE EITHER ALTERNATE 1, 2 OR 3 FOR DRAINAGE STRUCTURES. ONLY ALTERNATE 1 AND 3 MAY BE USED FOR CATTLE PASSES, UNLESS OTHERWISE STATED IN THE CONTRACT. THE MATERIALS, FABRICATION AND WORK NECESSARY TO TIE THE PIPE BY THIS DETAIL WILL BE CONSIDERED INCIDENTAL TO THE PIPE AND APRON ENDWALLS IF REQUIRED.

DETAILED DRAWINGS FOR PROPOSED ALTERNATE DESIGNS FOR JOINT TIES SHALL BE SUBMITTED TO THE ENGINEER FOR APPROVAL.

JOINT TIES TO BE HOT-DIP GALVANIZED PER ASTM A 153.

① ℄ OF TONGUE AND GROOVE OR BELL AND SPIGOT JOINTS.

② THE INSIDE OF THE THREADED INSERTS SHALL BE CLEAN TO ALLOW THE INSERTION OF THREADED EYE BOLTS.

③ HOLES SHALL BE CAST-IN-PLACE OR DRILLED 12 INCHES FROM ℄ OF TONGUE AND GROOVE.

④ BOLT PROJECTION INSIDE OF PIPE SHALL NOT EXCEED 2 INCHES.

⑤ OPENING TO BE ROD DIAMETER PLUS 1 INCH.

⑥ LENGTH ADEQUATE TO EXTEND TO WITHIN 1/2 INCH OF THE INNER SURFACE OF THE PIPE.

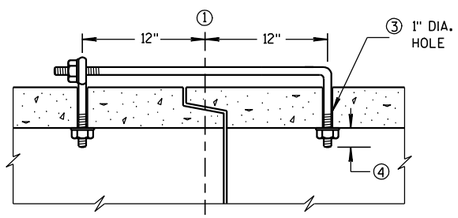

(TONGUE & GROOVE PIPE)

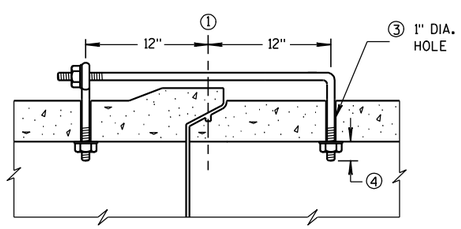

(MODIFIED BELL PIPE)

LONGITUDINAL SECTION

EYE BOLT DIMENSION TABLE

PIPE SIZE	L = LENGTH	
	TONGUE & GROOVE PIPE	MODIFIED BELL PIPE
18" TO 24"	4 1/2"	6 1/4"
30"	5"	7"
36"	5 1/2"	7"
42"	6"	
48"	6 1/2"	
60"	7 1/2"	
66"	8"	

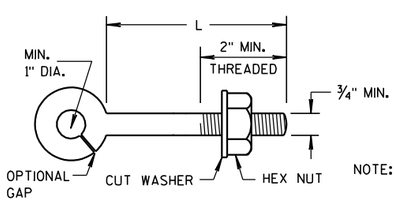

EYE BOLT

NOTE:

NOTE: TWO EYE BOLTS MAY BE USED WITH A 30" LONG THREADED ROD IN LIEU OF THE 90° BENT TIE ROD.

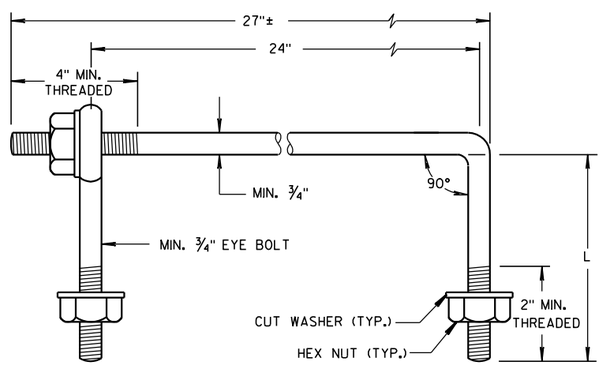

EYE BOLT AND TIE ROD

(JOINT TIES FOR 18" TO 66" DIA. CONCRETE PIPE)

EYE BOLT AND TIE ROD ASSEMBLY (ALTERNATE NO. 2)

ADJUSTABLE TIE ROD TABLE

PIPE DIAMETER	TIE ROD DIAMETER	D	L_1	N
12-60	5/8	5/8	5	1/2
66-84	3/4	3/4	5	1/2
90-108	1	1	7	1 7/16

DIMENSIONS SHOWN ARE IN INCHES

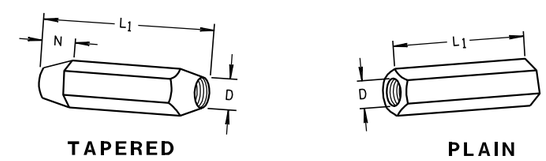

TAPERED PLAIN

RIGHT AND LEFT THREADS

SLEEVE NUTS

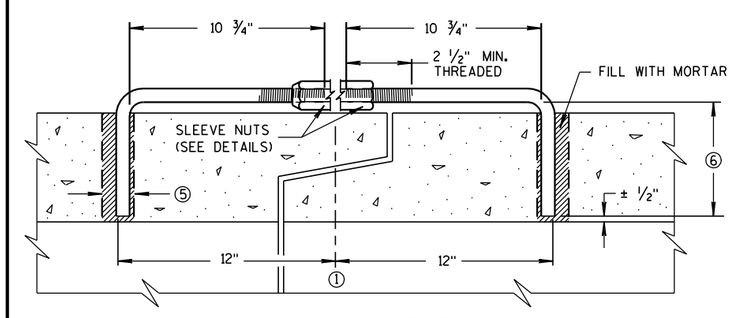

LONGITUDINAL SECTION

(JOINT TIES FOR 12" TO 108" DIA. CONCRETE PIPE)

ADJUSTABLE TIE ROD (ALTERNATE NO. 3)

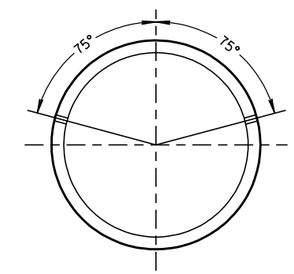

PLACEMENT OF (2) CAST-IN-PLACE INSERTS OR HOLES DURING FABRICATION FOR PIPE SECTIONS REQUIRING TIE RODS

TRANSVERSE SECTION

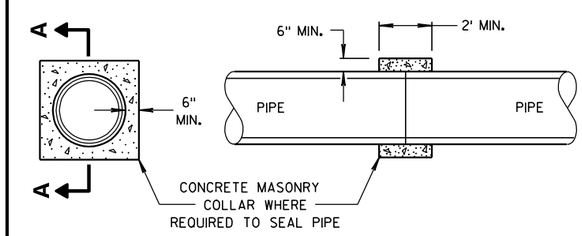

SECTION A-A

CONCRETE COLLAR DETAIL

JOINT TIES FOR CONCRETE PIPE AND CONCRETE COLLAR DETAIL

STATE OF WISCONSIN
DEPARTMENT OF TRANSPORTATION

APPROVED
6/5/2012 /S/ Jerry H. Zogg
DATE ROADWAY STANDARDS DEVELOPMENT ENGINEER
FHWA

6

6

S.D.D. 8 F 4-7

S.D.D. 8 F 4-7

DIMENSIONS IN INCHES											
PIPE DIA.	A	B	C	D	E	F	G	H	J	L	Z
**4	6	12	5¼	9	8	32	36	11	2⅜	6½	4
6	8	14	7¼	11	10	42	44	13	3⅝	8½	6

**APRON ENDWALL FOR 6 INCH DIAMETER PIPE MAY BE SUBSTITUTED FOR THIS SIZE PROVIDED THE HOLE IN THE HEADWALL IS SIZED AND LOCATED TO CONFORM TO THE 4 INCH DIAMETER PIPE DIMENSIONS (C & J)

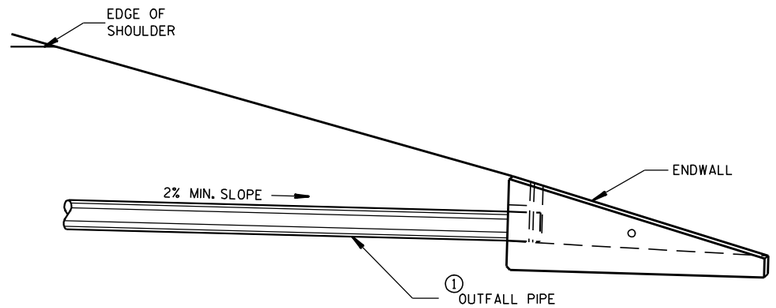

INSTALLATION DETAIL

GENERAL NOTES

DETAILS OF CONSTRUCTION, MATERIALS AND WORKMANSHIP NOT SHOWN ON THIS DRAWING SHALL CONFORM TO THE PERTINENT REQUIREMENTS OF THE STANDARD SPECIFICATIONS AND THE APPLICABLE SPECIAL PROVISIONS.

ALTERNATIVE DESIGNS WHICH PROVIDE EQUIVALENT CAPACITY AND STRENGTH MAY BE USED WHEN APPROVED BY THE ENGINEER. ENDWALL MAY BE EITHER PRECAST OR CAST-IN-PLACE CONCRETE.

THE UNDERDRAIN PIPE SHALL BE FULLY INSERTED AND SEALED INTO THE ENDWALL WITH CEMENT MORTAR PRIOR TO BACKFILLING AROUND THE STRUCTURE.

THE UPPERMOST POINT OF THE ENDWALL SHALL BE PLACED FLUSH WITH THE ROADWAY SLOPE. ADJACENT EMBANKMENT SLOPES SHALL BE SHAPED TO FIT THE SIDES AND TOE OF THE ENDWALL. EXACT PLACEMENT OF THE OUTFALL PIPE AND ENDWALL SHALL BE DETERMINED BY THE ENGINEER TO MATCH THE ELEVATIONS AND FLOW DIRECTION OF THE ROADSIDE DITCH.

① THE OUTFALL PIPE UNDERDRAIN AND FITTINGS SHALL CONFORM TO THE REQUIREMENTS OF THE SPECIFICATION FOR POLY (VINYL CHORIDE) (PVC) PLASTIC DRAIN, WASTE AND VENT PIPE AND FITTINGS, ASTM DESIGNATION: D 2665, SCHEDULE 40 PVC OR THE STANDARD SPECIFICATION FOR TYPE PSM POLY (VINYL CHORIDE) (PVC) SEWER PIPE AND FITTINGS, ASTM DESIGNATION: D 3034, TYPE PSM SDR 23.5 PVC SEWER PIPE, ALL JOINTS SHALL BE SOLVENT WELDED.

THE OUTFALL PIPE INCLUDING ALL FITTINGS AND THE RODENT SHIELD SHALL BE MEASURED AND PAID FOR AS PIPE UNDERDRAIN UNPERFORATED.

② THE RODENT SHIELD SHALL BE A PVC GRATE SIMILAR TO THIS DETAIL. THE GRATE IS COMMERCIALLY AVAILABLE AS A FLOOR STRAINER. A PIPE COUPLING IS REQUIRED FOR THE ATTACHMENT OF THIS SHIELD TO THE OUTFALL PIPE. THE SHIELD SHALL BE FASTENED TO THE PIPE COUPLING WITH TWO OR MORE NO. 10 X 1-INCH STAINLESS STEEL SHEET METAL SCREWS.

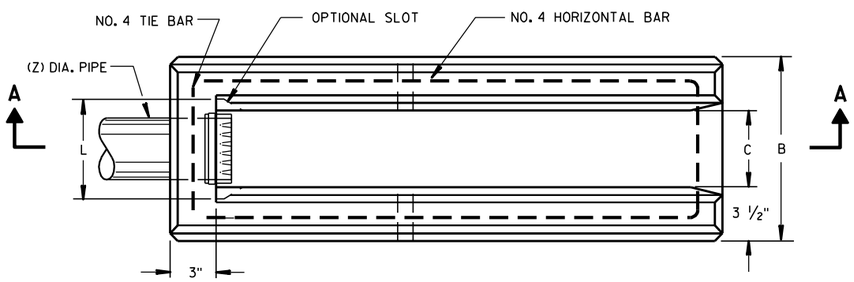

PLAN VIEW

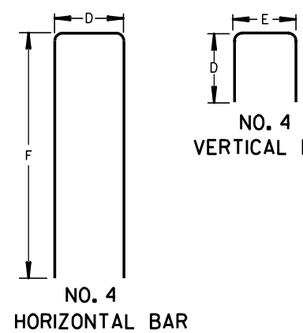

BAR STEEL REINFORCEMENT DETAILS

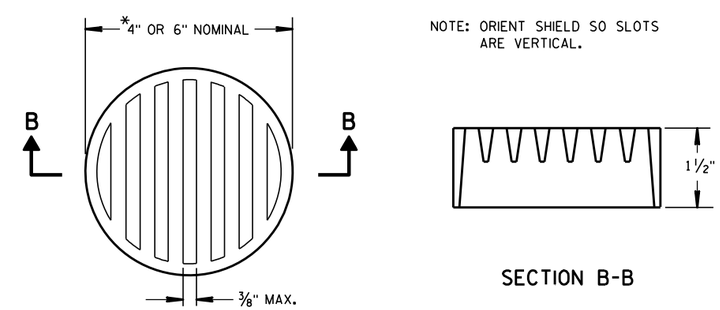

NOTE: ORIENT SHIELD SO SLOTS ARE VERTICAL.

SECTION B-B

② RODENT SHIELD

*NOTE: DIMENSIONS ARE APPROXIMATE. THE GRATE IS SIZED TO FIT INTO A PIPE COUPLING.

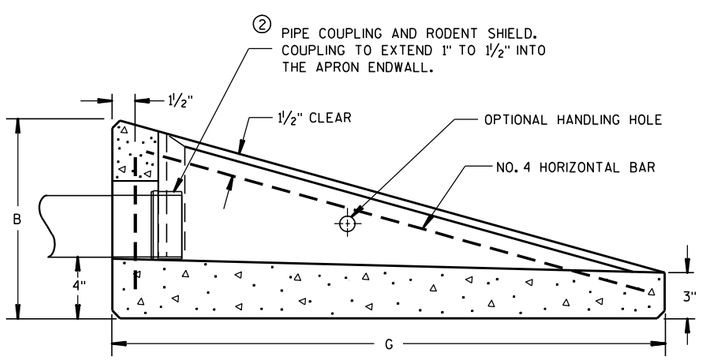

SECTION A-A

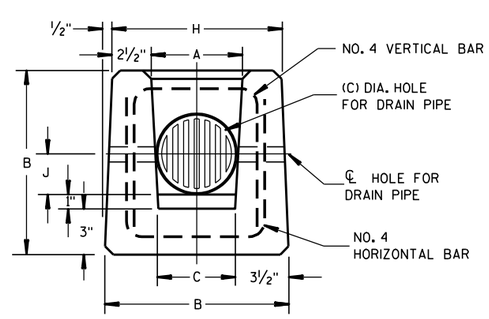

END VIEW

CONCRETE APRON ENDWALL FOR UNDERDRAIN

REINFORCED CONCRETE APRON ENDWALL FOR PIPE UNDERDRAIN	
STATE OF WISCONSIN DEPARTMENT OF TRANSPORTATION	
APPROVED 3/10/98 DATE	/S/ Rory L. Rhinesmith CHIEF ROADWAY DEVELOPMENT ENGINEER
FHWA	

6

6

S.D.D. 8 F 6-4

S.D.D. 8 F 6-4

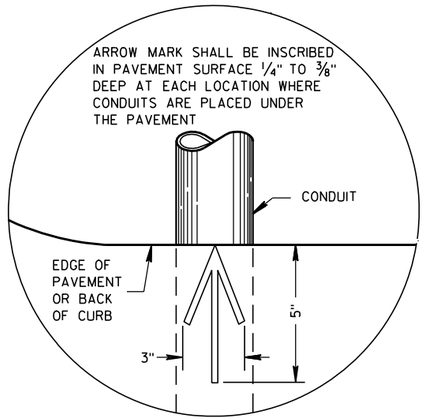

PLAN VIEW

ARROW MARK

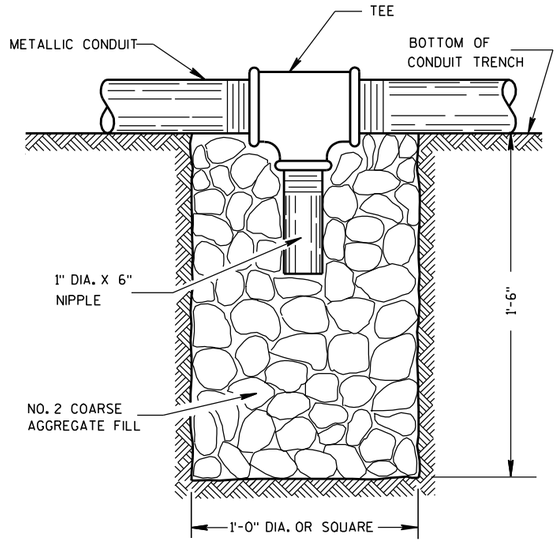

NOTE: INSTALL AT LOCATIONS WHERE METALLIC CONDUITS CANNOT BE PITCHED TO DRAIN INTO A PULL BOX.

DRAIN SUMP FOR METALLIC CONDUIT

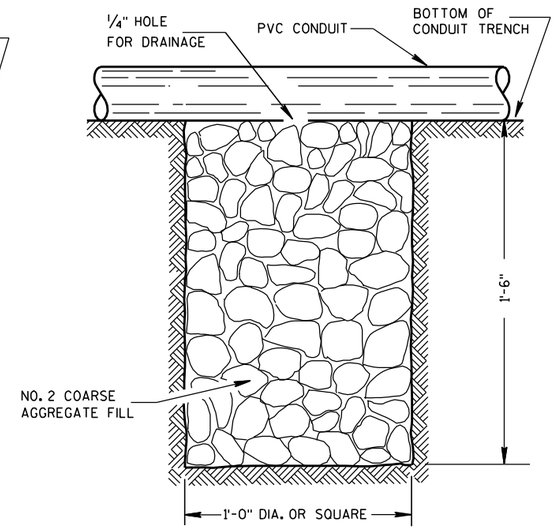

NOTE: INSTALL AT LOCATIONS WHERE PVC CONDUITS CANNOT BE PITCHED TO DRAIN INTO A PULL BOX.

DRAIN SUMP FOR PVC CONDUIT

GENERAL NOTES

DETAILS OF CONSTRUCTION, MATERIALS AND WORKMANSHIP NOT SHOWN ON THIS DRAWING SHALL CONFORM TO THE PERTINENT REQUIREMENTS OF THE CONTRACT.

METALLIC (STANDARD SPECIFICATION 652.2.2) OR NONMETALLIC (STANDARD SPECIFICATION 652.2.3) CONDUIT SHALL BE FURNISHED AND PLACED AS SHOWN.

DEPTH OF CONDUIT INSTALLED BELOW THE TRAVELED WAY SHALL BE 24 INCHES MINIMUM AND 36 INCHES MAXIMUM.

DEPTH OF CONDUIT INSTALLED THAT IS NOT BELOW THE TRAVELED WAY SHALL BE 18 INCHES MINIMUM AND 36 INCHES MAXIMUM.

ANY EXCEPTION TO THE MAXIMUM DEPTH SHALL BE ONLY WITH THE WRITTEN APPROVAL OF THE ENGINEER.

THE TRENCH SHALL NOT BE BACKFILLED PRIOR TO INSPECTION OF THE CONDUIT.

ALL METALLIC CONDUIT RACEWAY ENDS SHALL BE REAMED AND THREADED.

ALL METALLIC CONDUIT IN WHICH WIRE OR CABLE IS TO BE INSTALLED SHALL BE BUSHED WITH APPROVED THREADED BUSHINGS BEFORE INSTALLATION OF THE WIRE OR CABLE.

ALL METALLIC CONDUITS IN WHICH WIRE OR CABLE IS NOT TO BE INSTALLED SHALL BE CAPPED WITH THREADED PROTECTIVE CAPS, AS APPROVED BY THE ENGINEER.

ALL NONMETALLIC CONDUIT SHALL BE CAPPED OR PLUGGED IMMEDIATELY AFTER INSTALLATION AND SHALL REMAIN CAPPED OR PLUGGED UNTIL WIRE/CABLES ARE INSTALLED.

NONMETALLIC CONDUITS IN WHICH WIRE OR CABLE IS NOT BEING INSTALLED SHALL REMAIN CAPPED OR PLUGGED.

BENDING OF PVC ELECTRICAL CONDUIT SHALL BE ACCOMPLISHED BY USING A BLANKET OR EMERSION TYPE TANK DESIGNED FOR THE PURPOSE OF BENDING PVC ELECTRICAL CONDUIT.

ALL CUT ENDS SHALL BE TRIMMED INSIDE AND OUTSIDE TO REMOVE ALL ROUGH EDGES ON NONMETALLIC CONDUIT. (SEE NEC 347.5)

WHEN REQUIRED TO CONNECT NONMETALLIC CONDUIT TO METALLIC CONDUIT, ONLY U.L. LISTED ADAPTER FITTINGS SHALL BE USED.

PRIOR TO CONDUIT ACCEPTANCE, CONDUIT CAPS OR PLUGS SHALL BE REMOVED, AND THE CAPS, PLUGS AND CONDUIT ENDS SHALL BE THOROUGHLY CLEANED AND THEN THE CAPS OR PLUGS REINSTALLED TO ENSURE THAT THE CAPS OR PLUGS CAN BE EASILY REMOVED IN THE FUTURE.

ALL CONDUIT BEING FURNISHED AND INSTALLED SHALL HAVE THE U.L. LABEL FIRMLY ATTACHED.

CONDUIT RUNS SHALL BE THE SAME SIZE OF CONDUIT FROM ONE END TO THE OTHER (FROM PULL BOX TO PULL BOX-OR-JUNCTION BOX TO JUNCTION BOX-OR-BASE TO BASE, ETC.).

POLY ROPE OR A PULL WIRE SHALL BE INSTALLED AS STATED IN THE STANDARD SPECIFICATION, ITEM 652.3.1.1.

ALL CONDUIT RUNS SHALL BE STRAIGHT (WITHOUT BENDS) FROM PULL BOX TO PULL BOX, PULL BOX TO BASE AND BASE TO BASE AS SHOWN ON THE PLANS.

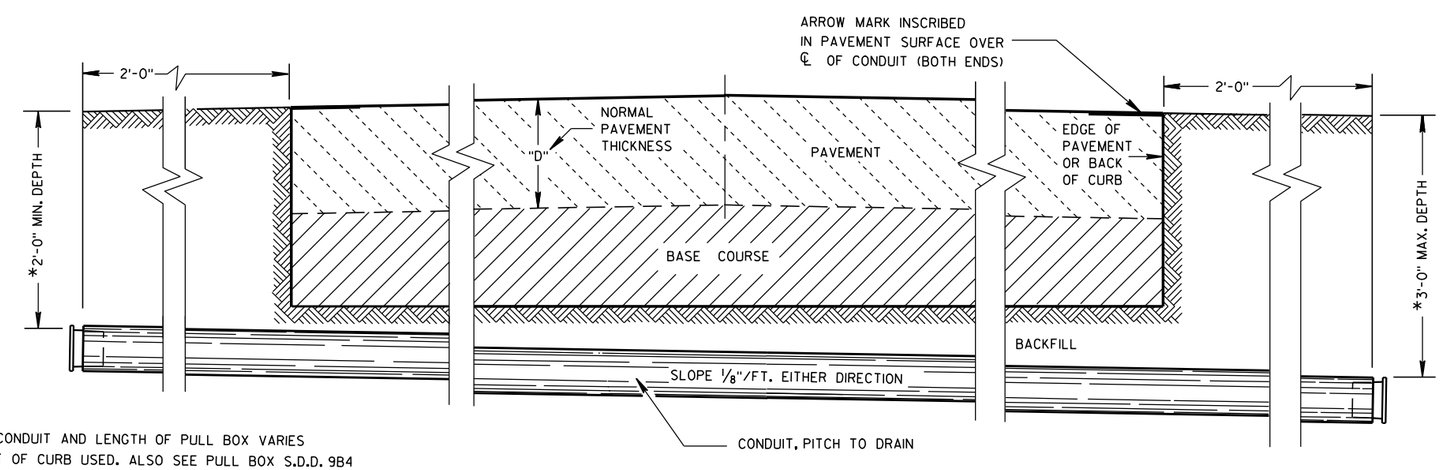

*DEPTH OF CONDUIT AND LENGTH OF PULL BOX VARIES WITH HEIGHT OF CURB USED. ALSO SEE PULL BOX S.D.D. 9B4

SIDE ELEVATION

DETAIL FOR CONDUIT UNDER PAVED HIGHWAYS

CONDUIT

STATE OF WISCONSIN
DEPARTMENT OF TRANSPORTATION

APPROVED

10/23/03	/S/ Balu Ananthanarayanan
DATE	STATE ELECTRICAL ENGI

FHWA

HWYS

6

S.D.D. 9 B 2-7

TABLE OF NOMINAL DIMENSIONS AND WEIGHTS

DIMENSION IN INCHES		CORRUGATED STEEL PIPE								
PIPE DIAMETER (INSIDE)	A	12	12	12	18	18	18	24	24	24
PIPE LENGTH **	B	24	30	36	24	30	36	36	42	48
WALL THICKNESS	C	0.064	0.064	0.064	0.064	0.064	0.064	0.064	0.064	0.064
COVER	D	10 1/4	10 1/4	10 1/4	16 1/4	16 1/4	16 1/4	22 1/4	22 1/4	22 1/4
FRAME	E	14 1/2	14 1/2	14 1/2	20 1/2	20 1/2	20 1/2	26 1/2	26 1/2	26 1/2
FRAME	F	8 1/2	8 1/2	8 1/2	14 1/2	14 1/2	14 1/2	20 1/2	20 1/2	20 1/2
FRAME	G	11 1/2	11 1/2	11 1/2	17 1/2	17 1/2	17 1/2	23 1/2	23 1/2	23 1/2
WEIGHT IN POUNDS *										
FRAME AND COVER		60	60	60	110	110	110	155	155	155

* THE ACTUAL WEIGHT OF THE MANHOLE FRAME AND COVER MAY VARY WITHIN 5 PERCENT PLUS OR MINUS OF THE WEIGHTS SHOWN.

** NORMALLY USED LENGTHS. THE PROJECT ENGINEER SHALL DETERMINE IF PIPE LENGTHS, OTHER THAN THOSE SPECIFIED, SHALL BE USED, TO A MAXIMUM OF 48" (CONTINUOUS LENGTH, NON-SPLICED). THE ADDITIONAL LENGTH SHALL BE INCIDENTAL TO THE PULL BOX BID PRICE.

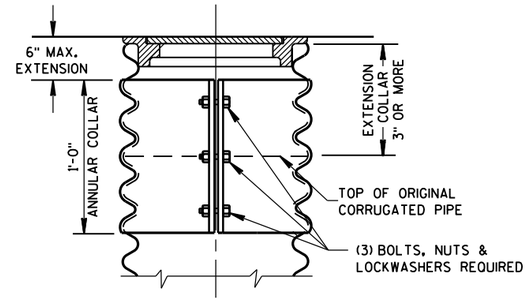

CORRUGATED PIPE EXTENDER

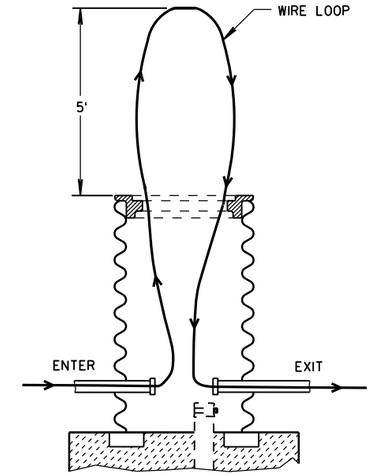

MEASUREMENT DETAIL FOR WIRE/CABLE IN THE PULL BOX

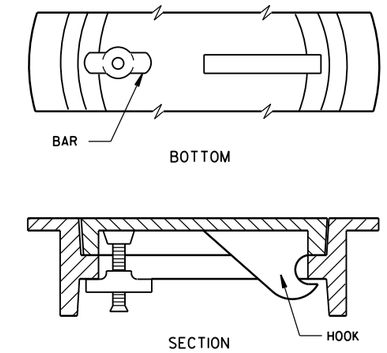

ALTERNATE COVER (LOCKING)

TIGHTENING BAR TYPE

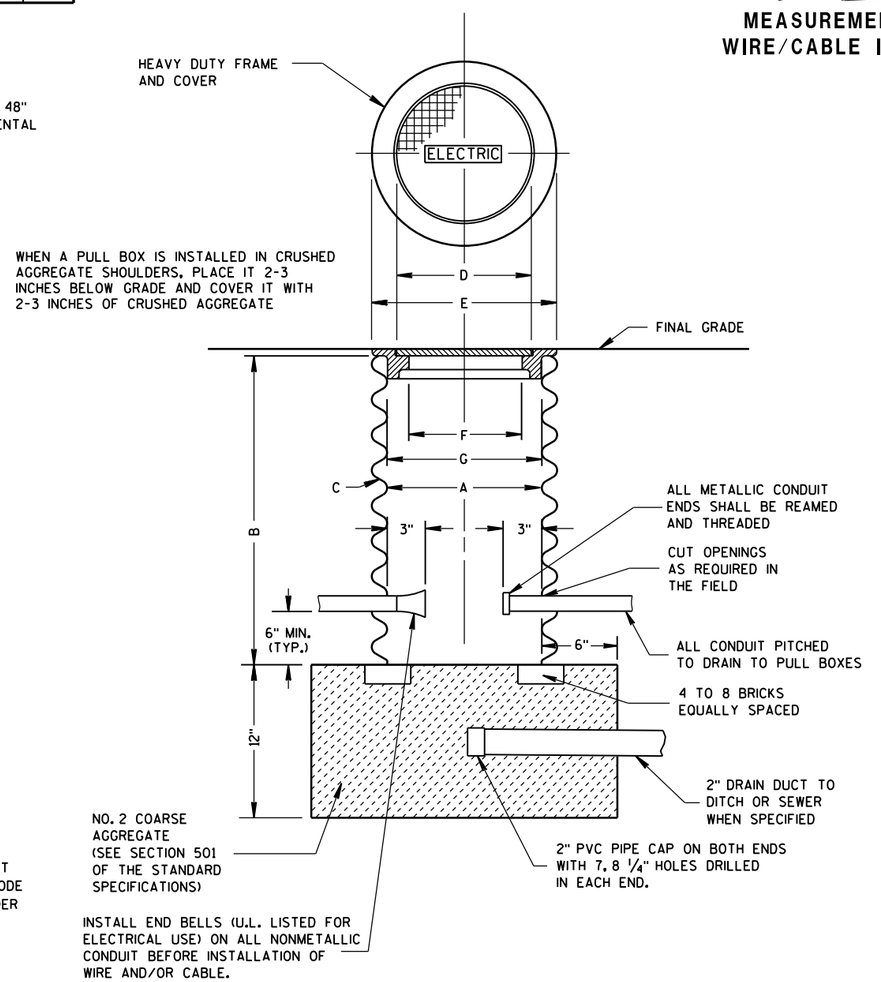

WHEN A PULL BOX IS INSTALLED IN CRUSHED AGGREGATE SHOULDERS, PLACE IT 2-3 INCHES BELOW GRADE AND COVER IT WITH 2-3 INCHES OF CRUSHED AGGREGATE

PULL BOX

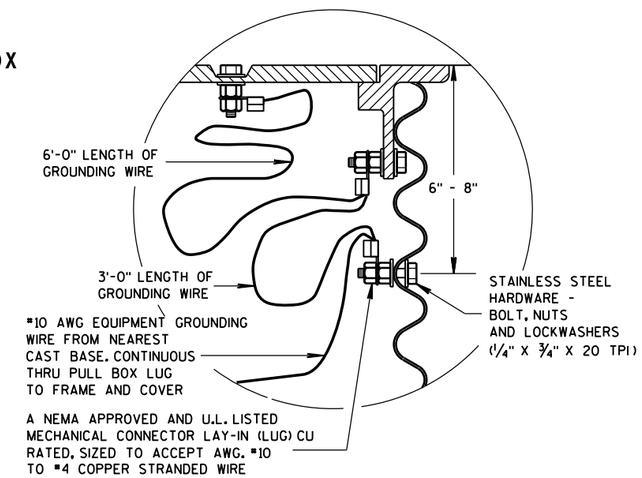

EQUIPMENT GROUNDING LUG AND LOCATION IN STEEL PULL BOXES

GENERAL NOTES

DETAILS OF CONSTRUCTION, MATERIALS AND WORKMANSHIP NOT SHOWN ON THIS DRAWING SHALL CONFORM TO THE PERTINENT REQUIREMENTS OF THE CONTRACT.

ALL FRAMES AND COVERS SHALL BE HEAVY DUTY TYPE, SUITABLE FOR VEHICULAR TRAFFIC LOADS.

PULL BOXES LOCATED IN THE ROADWAYS SHALL HAVE LOCKING COVERS.

ENTRANCE HOLES INTO PULL BOXES SHALL BE CUT WITH A CIRCULAR HOLE SAW OR HYDRAULIC CONDUIT PUNCH. HOLE SIZE SHALL BE THE OUTSIDE DIAMETER OF THE CONDUIT THAT IS TO FIT IN THE OPENING PLUS NO MORE THAN 1/4".

THE CONTRACTOR SHALL NOT INSTALL WIRE IN ANY PULL BOX UNTIL ITS INSTALLATION HAS BEEN INSPECTED AND ACCEPTED BY THE ENGINEER.

GROUNDING LUGS (MECHANICAL CONNECTORS) SHALL BE U.L. LISTED AND APPROVED FOR USE WITH COPPER WIRE.

GROUNDING LUGS ARE NOT REQUIRED IN PULL BOXES WHEN VOLTAGES OF LESS THAN 50 VOLTS AC ARE THE ONLY VOLTAGES ENCOUNTERED IN THE BOXES.

ALL METALLIC CONDUIT IN WHICH WIRE AND/OR CABLE IS TO BE INSTALLED, SHALL BE BUSHED BEFORE INSTALLATION OF THE WIRE AND/OR CABLE.

S.D.D. 9B2, "CONDUIT", APPLIES TO THIS DRAWING.

WHEN PULL BOXES ARE INSTALLED FOR FUTURE USE, DO NOT INSTALL THE EQUIPMENT GROUNDING LUG. THE EQUIPMENT GROUNDING LUG, THE EQUIPMENT GROUNDING ELECTRODE AND THE EQUIPMENT GROUNDING CONDUCTOR SHALL BE REQUIRED AND INSTALLED UNDER A FUTURE WIRING CONTRACT.

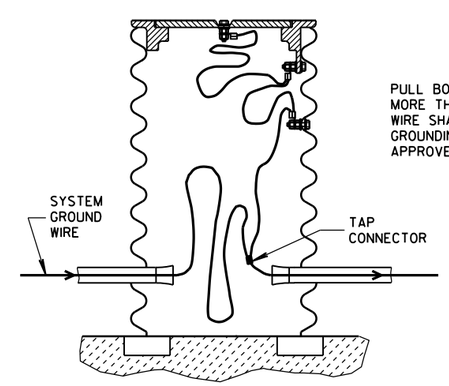

PULL BOX TO NEAREST BASE DISTANCE MORE THAN 20 FEET. PULL BOX GROUND WIRE SHALL CONNECT AT SYSTEM GROUNDING WIRE. USE DEPARTMENT APPROVED TAP CONNECTOR.

EQUIPMENT GROUNDING LUG AND LOCATION IN STEEL PULL BOXES

PULL BOX

STATE OF WISCONSIN
DEPARTMENT OF TRANSPORTATION

APPROVED
2-7-2013 — DATE
/S/ Ahmet Demirbilek — STATE ELECTRICAL
FHWA

GENERAL NOTES

DETAILS OF CONSTRUCTION, MATERIALS AND WORKMANSHIP NOT SHOWN ON THIS DRAWING SHALL CONFORM TO THE PERTINENT REQUIREMENTS OF THE CONTRACT.

FOUR (4) BOLTS SHALL BE FURNISHED WITH EACH TRANSFORMER BASE. BOLTS SHALL BE 1" DIAMETER, 4" IN LENGTH, WITH WASHERS, LOCK WASHERS AND NUTS. BOLTS, NUTS AND WASHERS SHALL BE MANUFACTURED IN ACCORDANCE WITH SECTION 641.2.2 OF THE STANDARD SPECIFICATIONS, ASTM A-325, (92,000 YIELD) HEAVY HEX NUT AND BE GALVANIZED IN ACCORDANCE WITH ASTM A-153, CLASS C.

LEVELING SHIMS, IF NEEDED, SHALL BE DESIGNED FOR THE PURPOSE AND USED UNDER CAST BASES WHEN PLUMBING POLES OR STANDARDS DURING INSTALLATION. THE USE OF WASHERS IN LIEU OF PROPER LEVELING SHIMS IS NOT ACCEPTABLE.

SHIM LENGTH SHALL BE LONG ENOUGH TO COMPLETELY COVER THE AREA UNDER THE LENGTH AND WIDTH OF THE BASE MOUNTING FLANGE.

DOUBLE NUTTING IS NOT ACCEPTABLE FOR LEVELING OR MOUNTING PURPOSES.

A NEMA APPROVED AND U.L. LISTED MECHANICAL CONNECTOR (LUG) AL/CU RATED AND SIZED TO ACCEPT #10 AWG STRANDED WIRE, SHALL BE FURNISHED AND INSTALLED IN THE PEDESTAL AND TRANSFORMER BASES.

THE MECHANICAL CONNECTOR SHALL BE INSTALLED USING A 1/4" - 20 (TPI) STAINLESS STEEL HEX HEAD BOLT OF SUFFICIENT LENGTH TO FIRMLY ATTACH THE LUG TO THE BASE.

SHOULD THE MANNER OF ATTACHMENT OF THE LUG REQUIRE WASHERS, HEX NUTS, LOCK WASHER - THEY SHALL BE STAINLESS STEEL AS IS THE BOLT. THE MANNER OF ATTACHMENT SHALL NOT BLOCK ACCESSIBILITY TO WIRE PLACEMENT IN THE CONNECTOR.

PEDESTAL BASE COLLAR THREADING SHALL BE TAPERED AND IN ACCORDANCE WITH NATIONAL PIPE THREADING DIMENSIONS.

BASE COLLAR THREADING SHALL EXTEND INTO THE BASE COLLAR WITH SUFFICIENT DEPTH TO ACCEPT THE INSTALLATION OF TRAFFIC SIGNAL STANDARDS TO A DEPTH OF 1 1/2", THEN TIGHTENING TO A POINT OF BEING IMMOVABLE.

THE ACCESS DOOR SHALL BE OF THE SAME MATERIAL AS THE BASE.

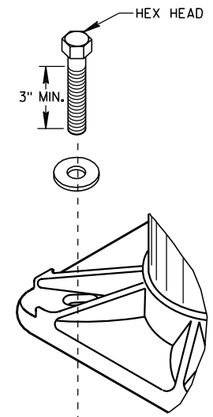

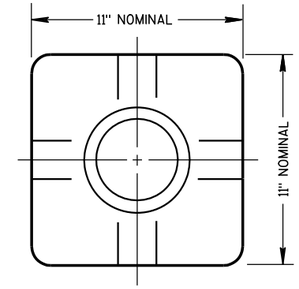

TOP VIEW
(PEDESTAL BASE)

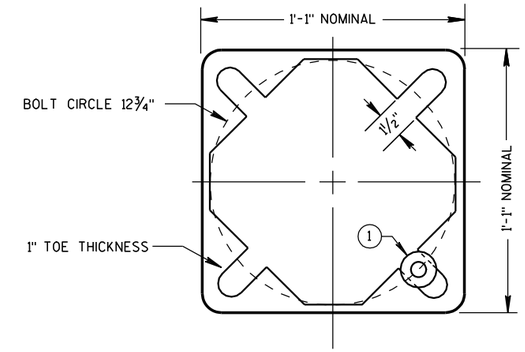

BOTTOM VIEW
(PEDESTAL BASE)

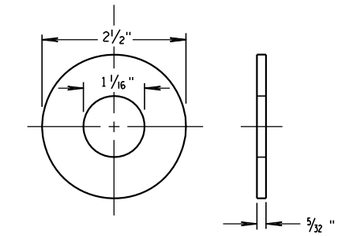

ZINC COATED STEEL WASHER
TO BE PROVIDED BY THE CONTRACTOR

PEDESTAL BASE WASHER (1)

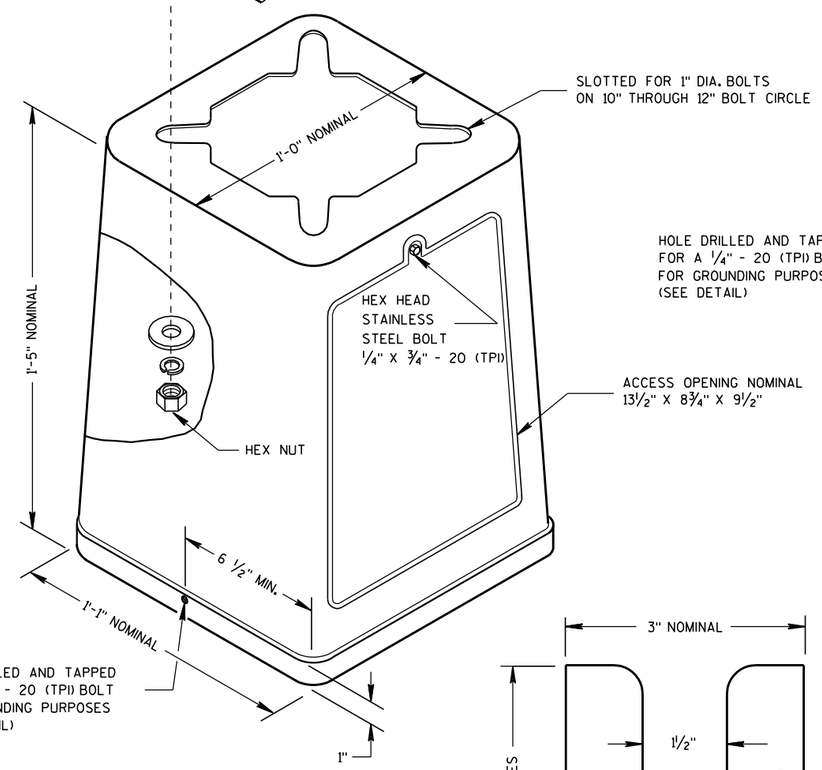

ISOMETRIC VIEW

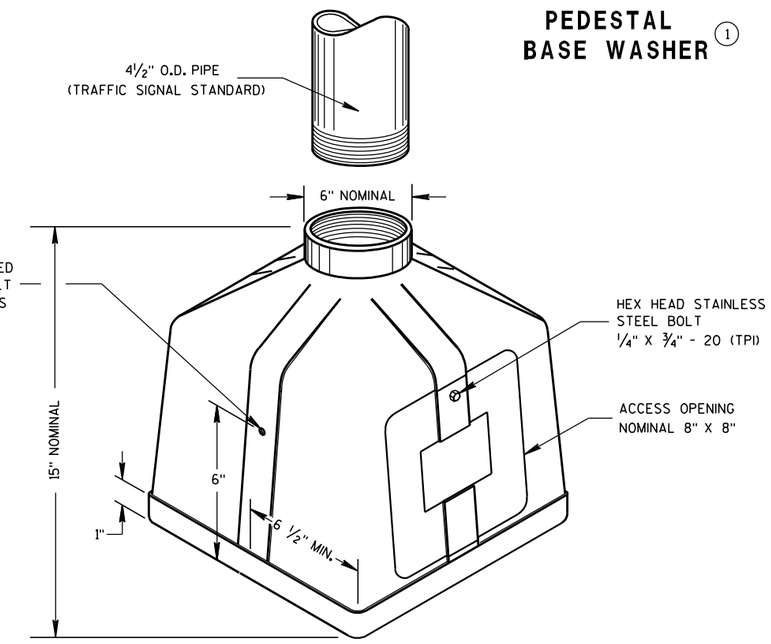

ISOMETRIC VIEW
PEDESTAL BASE

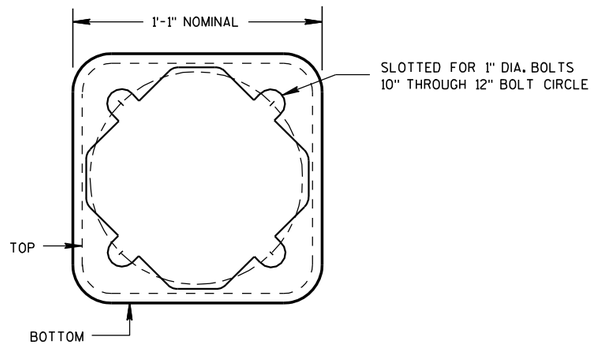

BOTTOM VIEW
(TRANSFORMER BASE)

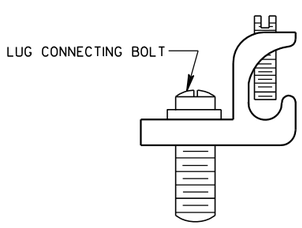

TYPICAL MECHANICAL CONNECTOR LUG

TO BE FURNISHED WITH EACH BASE

TRANSFORMER BASE

INTENDED FOR USE WITH TYPE 2, 3, 4, 5 & 6 POLES

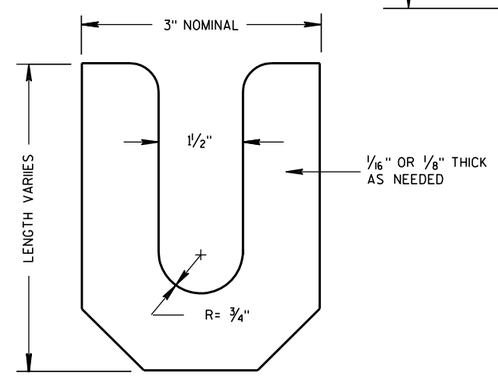

LEVELING SHIM

TRANSFORMER/PEDESTAL BASES	
STATE OF WISCONSIN DEPARTMENT OF TRANSPORTATION	
APPROVED 10/27/09 DATE FHWA	/S/ Joanna L. Pruch STATE ELECTRICAL ENGI 120 HWYS

6

6

S.D.D. 9 C 3-3

S.D.D. 9 C 3-3

GENERAL NOTES

DETAILS OF CONSTRUCTION, MATERIALS AND WORKMANSHIP NOT SHOWN ON THIS DRAWING SHALL CONFORM TO THE PERTINENT REQUIREMENTS OF THE CONTRACT.

BASES SHALL BE EXCAVATED BY USE OF A CIRCULAR AUGER.

TOP SURFACES OF CONCRETE BASES SHALL BE TROWEL FINISHED SMOOTH AND LEVEL.

CONDUIT SIZES AND LOCATIONS SHALL BE AS SHOWN ON THE PLANS.

THE FINAL OR TERMINATING CONCRETE BASE IN A CONDUIT RUN SHALL HAVE A 6" EXIT STUB INSTALLED FOR FUTURE CABLING USE. THE EXIT STUB SHALL BE SIZED AS USED THROUGHOUT THE CONDUIT RUN AS SHOWN AT THE ENTRANCE OF THE BASE.

MINIMUM BENDING RADIUS OF CONDUIT IS EQUAL TO 6 X THE DIAMETER.

CONDUIT HEIGHT ABOVE CONCRETE BASES SHALL BE 1 INCH. ALL METALLIC CONDUIT ENDS SHALL BE REAMED AND THREADED.

ALL CONDUIT ENDS AT THE TOP OF CONCRETE BASES SHALL BE CAPPED IF METALLIC OR PLUGGED IF NONMETALLIC IMMEDIATELY AFTER PLACEMENT AND BEFORE CONCRETE IS POURED. CONDUITS IN WHICH WIRE OR CABLE IS NOT INSTALLED SHALL REMAIN CAPPED OR PLUGGED.

BELL ENDS SHALL BE INSTALLED ON ALL PVC CONDUIT EXPOSED AT THE TOP OF CONCRETE BASES BEFORE INSTALLATION OF CABLE OR WIRE.

ENDS OF CONDUIT INSTALLED BELOW GRADE FOR FUTURE USE SHALL BE CAPPED IF METALLIC OR PLUGGED IF NONMETALLIC.

WHEN REQUIRED TO CONNECT NONMETALLIC CONDUIT TO METALLIC CONDUIT, ONLY ADAPTER FITTINGS, U.L. LISTED FOR ELECTRICAL USE, SHALL BE USED.

IF A BASE REQUIRES A DEEP FORM BECAUSE OF LOOSE DIRT OR FILL, THE FORM SHALL BE REMOVED BEFORE BACKFILLING AROUND THE BASE. BACKFILL SHALL BE TAMPED TIGHT AGAINST THE BARE CONCRETE BASE IN LAYERS OF 1 FOOT OR LESS.

A NO. 4 AWG, STRANDED COPPER EQUIPMENT GROUNDING CONDUCTOR SHALL BE EXOTHERMICALLY WELDED TO THE EQUIPMENT GROUNDING ELECTRODE (GROUND ROD).

THE EQUIPMENT GROUNDING CONDUCTOR SHALL ENTER THE BASE THROUGH A 1 INCH CONDUIT INSTALLED FOR GROUNDING PURPOSES, LEAVING A 4 FOOT COIL OF WIRE ABOVE THE CONCRETE BASE. THE EQUIPMENT GROUNDING CONDUCTOR SHALL BE NEATLY COILED AND THE COILS TIED TOGETHER.

ANCHOR RODS SHALL BE 1" X 3'-6".

ANCHOR RODS SHALL BE THREADED 12" IN LENGTH ON EACH END OF THE ROD. ANCHOR RODS SHALL BE MANUFACTURED IN ACCORDANCE WITH SECTION 654.2.1 AND 641.2.2 OF THE STANDARD SPECIFICATIONS.

WHEN ANCHOR RODS USING THE ALTERNATE "L" BEND ARE FURNISHED, THE 4" "L" BEND SHALL BE IN ADDITION TO THE SPECIFIED ANCHOR ROD BAR LENGTH. THE "L" BEND END SHALL NOT BE THREADED.

WELDING OF THE ANCHOR RODS TO THE CAGE IS UNACCEPTABLE. TIE WIRES SHALL BE USED.

ANCHOR RODS SHALL BE INSTALLED WITH MISALIGNMENTS OF LESS THAN 1:40 FROM VERTICAL.

BAR STEEL REINFORCEMENT SHALL BE COATED WITH POWDERED EPOXY RESIN IN ACCORDANCE WITH SECTION 505 OF THE STANDARD SPECIFICATIONS (LATEST EDITION).

(1) THE MINIMUM DEPTH OF CONDUIT EXITING THE CONCRETE BASE AND INSTALLED BELOW THE TRAVELED WAY SHALL BE 24 INCHES. THE MINIMUM DEPTH OF CONDUIT EXITING THE CONCRETE BASE THAT IS NOT INSTALLED BELOW THE TRAVELED WAY SHALL BE 18 INCHES. THE MAXIMUM DEPTH OF ALL CONDUIT SHALL BE 36 INCHES EXCEPT WITH WRITTEN APPROVAL BY THE ENGINEER.

(2) (4) 1" DIA. X 3'-6" ANCHOR RODS

(3) (6) NO. 4 X 4'-8" BAR STEEL REINFORCEMENT.

(4) (5) NO. 4 X 5'-1" BAR STEEL REINFORCEMENT @ 1'-0" C-C.

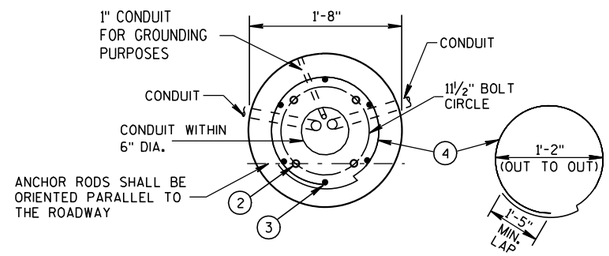

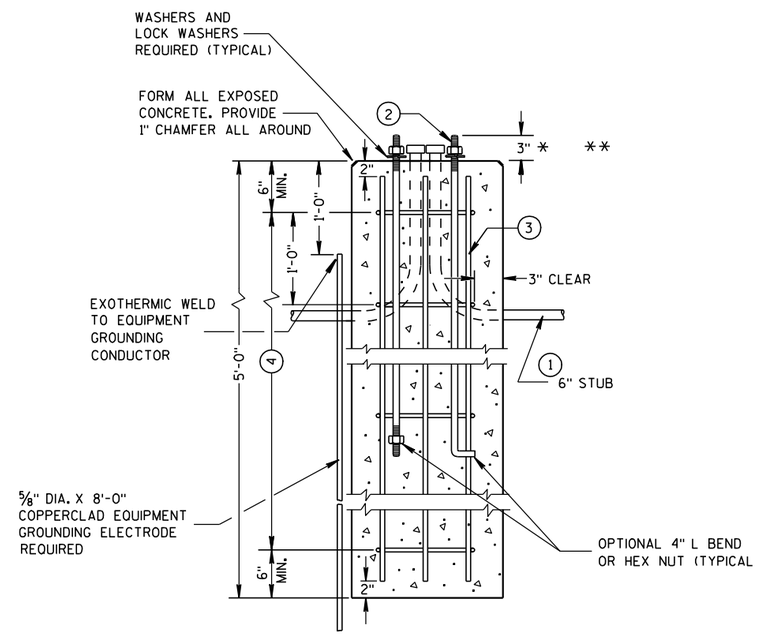

CONCRETE BASE, TYPE 6 (FOR 35' LIGHT POLES)

* ANY ANCHOR ROD PROJECTION SHORTER THAN 2¾" OR LONGER THAN 3¼" SHALL REQUIRE THE BASE TO BE REMOVED AND REPLACED AT THE CONTRACTORS EXPENSE.

** FOR NONBREAKAWY INSTALLATIONS, 4½" ± ANCHOR ROD PROJECTION WITH THE USE OF LEVELING NUTS. RODENT SCREEN REQUIRED.

FORM DEPTH SHALL BE NO MORE THAN 6" BELOW GRADE ON THE LOWER SIDE OF BASE

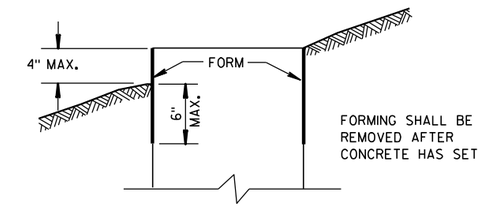

FORMING DETAIL

QUANTITY REQUIREMENTS	
APPROX. CUBIC YARDS OF CONCRETE	0.4
LBS. OF HOOP BAR STEEL	16
LBS. OF VERTICAL BAR STEEL	18

CONCRETE BASE, TYPE 6

STATE OF WISCONSIN
DEPARTMENT OF TRANSPORTATION

APPROVED

3/3/10 — DATE

/S/ Joanna L. Pi... — STATE ELECTRICAL ENGI 121 — HWYS

FHWA

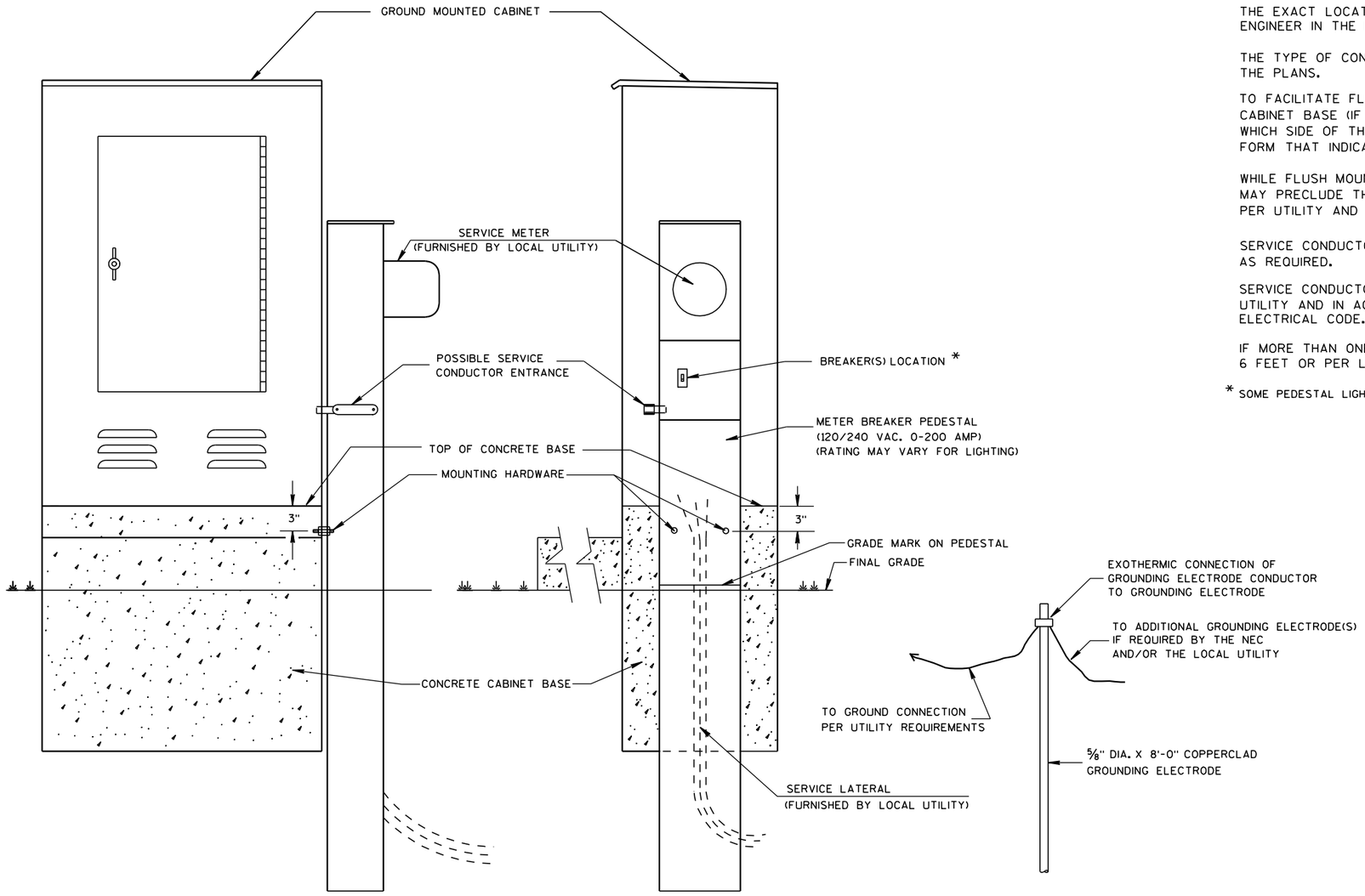

TYPICAL CABINET SERVICE INSTALLATION

GENERAL NOTES

DETAILS OF CONSTRUCTION, MATERIALS AND WORKMANSHIP NOT SHOWN ON THIS DRAWING SHALL CONFORM TO THE PERTINENT REQUIREMENTS OF THE CONTRACT.

THE EXACT LOCATION OF THE METER BREAKER PEDESTAL SHALL BE DETERMINED BY THE ENGINEER IN THE FIELD.

THE TYPE OF CONCRETE CABINET BASE TO BE INSTALLED SHALL BE AS CALLED FOR IN THE PLANS.

TO FACILITATE FLUSH MOUNTING OF THE METER BREAKER PEDESTAL AGAINST THE SIDE OF THE CABINET BASE (IF FLUSH MOUNTING POSSIBLE. CONFER WITH THE LOCAL UTILITY TO DETERMINE WHICH SIDE OF THE CONCRETE BASE THE ELECTRICAL SERVICE LATERAL WILL APPROACH. THEN FORM THAT INDICATED SIDE FOR FULL SIDE DEPTH.

WHILE FLUSH MOUNTING IS THE MOST DESIRABLE MOUNTING CONFIGURATION UTILITY REQUIREMENTS MAY PRECLUDE THIS OPTION. CONTRACTOR MUST PROVIDE UTILITY APPROVED PEDESTAL AND INSTALL PER UTILITY AND MANUFACTURERS REQUIREMENTS.

SERVICE CONDUCTOR ENTRANCES SHALL BE RIGID METALLIC CONDUIT, NIPPLES AND/OR CONDULETS AS REQUIRED.

SERVICE CONDUCTOR ENTRANCES SHALL BE SIZED AND LOCATED AS REQUIRED BY THE LOCAL UTILITY AND IN ACCORDANCE WITH APPROPRIATE ARTICLES OF THE LATEST ACCEPTED NATIONAL ELECTRICAL CODE.

IF MORE THAN ONE GROUNDING ELECTRODE IS REQUIRED, THE DISTANCE APART SHALL BE 6 FEET OR PER LOCAL UTILITY REGULATIONS.

* SOME PEDESTAL LIGHTING PLANS SHOW MAIN LUGS ONLY.

CABINET SERVICE INSTALLATION (METER BREAKER PEDESTAL)

STATE OF WISCONSIN
DEPARTMENT OF TRANSPORTATION

APPROVED
10/27/09 — DATE
/S/ Joanna L. Bush — STATE ELECTRICAL ENGI
HWYS
FHWA

GENERAL NOTES

DETAILS OF CONSTRUCTION, MATERIALS AND WORKMANSHIP NOT SHOWN ON THIS DRAWING SHALL CONFORM ~~TO THE PERTINENT~~ REQUIREMENTS OF THE CONTRACT.

ALL TYPE 6 POLE MOUNTINGS SHALL BE DESIGNED TO INCLUDE TWIN 15' ARMS WITH LUMINAIRES.

POLES SHALL BE EITHER GALVANIZED STEEL OR ALUMINUM, AS CALLED FOR IN THE CONTRACT.

TYPE 6 ALUMINUM POLES, SHALL BE CONSTRUCTED OF 6063-T6 ALUMINUM ALLOY. SLEEVING INSIDE THE POLE IS NOT ACCEPTABLE.

THE TYPE 6 ALUMINUM POLES SHALL HAVE MINIMUM WALL THICKNESS OF 0.219".

TYPE 6 STEEL POLES SHALL HAVE A MINIMUM WALL THICKNESS OF U.S. STANDARD 11 GAGE (.1196").

THE SLIPFITTER END OF THE LUMINAIRE MAST ARM SHALL BE A NOMINAL 2⅜ INCHES IN OUTSIDE DIAMETER. THE STRAIGHT PORTION OF THE SLIPFITTER END OF THE LUMINAIRE ARM SHALL BE A NOMINAL 12 INCHES IN LENGTH.

WHEN TRANSFORMER BASES ARE USED, WIRE CONNECTIONS SHALL BE MADE IN THE TRANSFORMER BASE.

1. 4" x 6" REINFORCED HANDHOLE & COVER ASSEMBLY WITH 2 (TWO) ¼" X ¾" - 20 TPI HEX HEAD STAINLESS STEEL BOLTS.
2. GROMMETS, 1" CHASE NIPPLES OR 1" CLOSE CONDUIT NIPPLES WITH BUSHINGS SHALL BE PROVIDED FOR 1⅜" HOLE IN POLE SHAFT FOR WIRING.
3. CAST ALUMINUM TRANSFORMER BASE, WHEN REQUIRED.
4. FURNISH AND INSTALL VENTILATED, CAST, METALLIC (ALUMINUM ALLOY) CAPS. FASTEN CAPS WITH ONE (1) ¼" X ¾" - 20 TPI STAINLESS STEEL, HEX HEAD BOLT.
5. SHIMMING, IF NEEDED, SHALL BE LOCATED BETWEEN THE CONCRETE FOUNDATION AND THE TRANSFORMER BASE.
6. INTERNAL DUMBBELL-TYPE VIBRATION DAMPER.

* RISE FOR 4' ARM SHALL BE 2'-0".

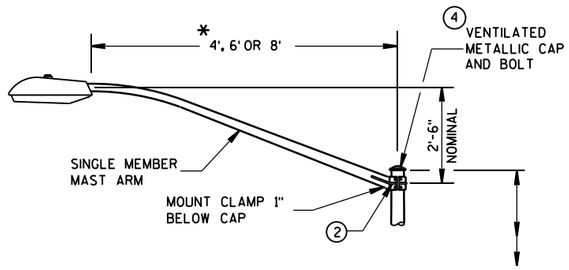

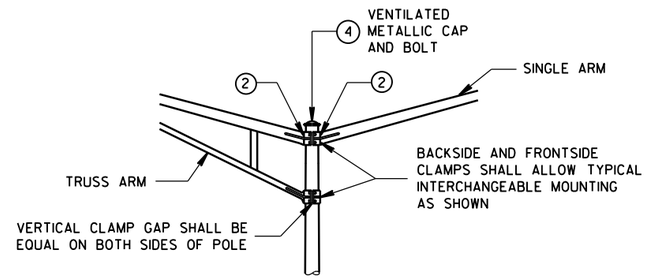

INTERCHANGEABLE MOUNTING DETAIL

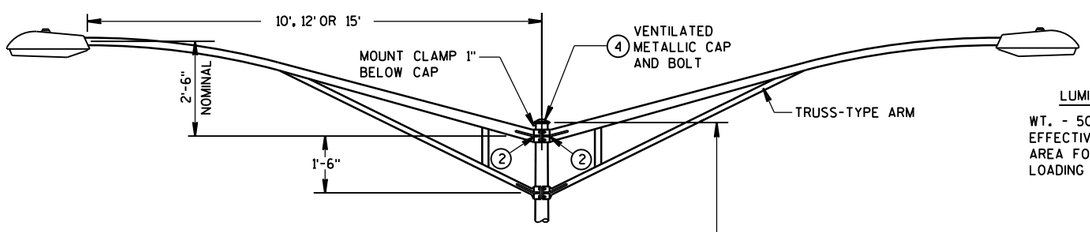

LUMINAIRE

WT. - 50 LBS.
EFFECTIVE PROJECTED AREA FOR WIND LOADING = 1.5 SQ. FT.

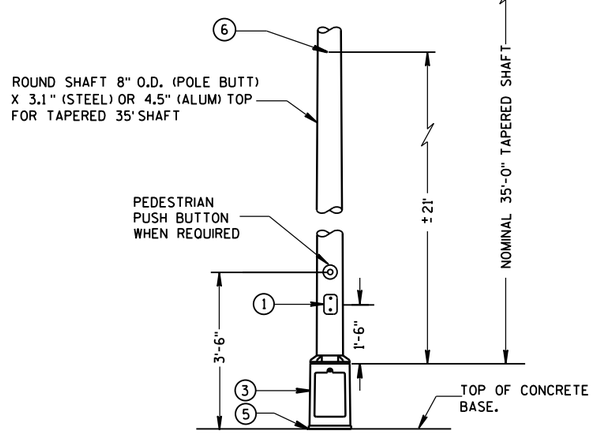

TYPE 6 POLE MOUNTING CONFIGURATION

(MAXIMUM LOAD)

LIGHTING ONLY

POLE MOUNTINGS FOR LIGHTING UNITS, TYPE 6 (35 FEET)

STATE OF WISCONSIN
DEPARTMENT OF TRANSPOR

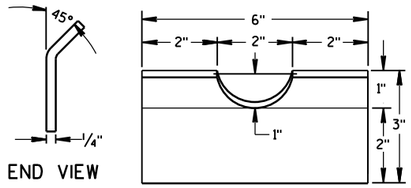

FRONT VIEW

RECTANGULAR CLAMP SHIM

(4 TO A SET)

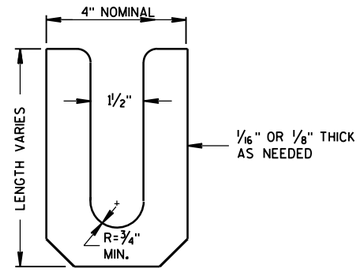

LEVELING SHIM (15)

SHALL BE ALUMINUM

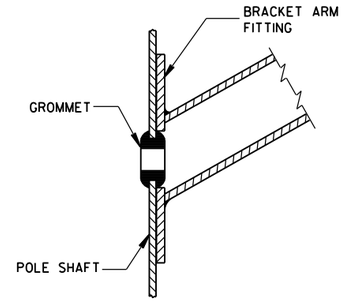

TYPICAL APPLICATION OF GROMMET IN POLE SHAFT

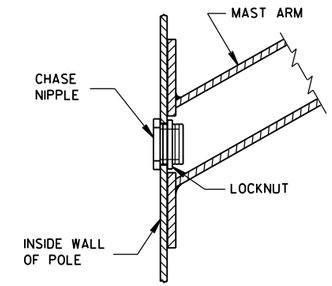

TYPICAL APPLICATION OF CHASE NIPPLE IN POLE SHAFT

GENERAL NOTES

CLAMP BOLT-NUT TIGHTENING TORQUE SHALL BE INDICATED BY INDENT STAMPING (1/2 INCH NUMERALS AND LETTERS) OR WEATHERPROOF PRINTING ON THE INSIDE OF THE CLAMP THAT IS WELDED TO THE ARM MEMBER.

(10) 4.5" I.D. FOR LUMINAIRE MAST ARM CLAMP.
6.625" I.D. FOR TROMBONE MAST ARM CLAMP.

(11) INDIVIDUAL BASE PLATE ANCHOR ROD COVERS. (4 REQUIRED)

(12) BASE PLATE SLOTTED TO ACCEPT 11" THROUGH 12" BOLT CIRCLE USING 1" DIAMETER ANCHOR RODS.

(13) OUTSIDE SHIM DIAMETER - (4.5" O.D. FOR LUMINAIRE MAST ARM)
(6.625" O.D. FOR TROMBONE MAST ARM)

(14) VARIABLE SHIM THICKNESS - (0.10", 0.25", 0.35", 0.53" OR 0.70")

SHIM THICKNESS FOR TROMBONE MAST ARMS MAY BE TYPICALLY 0.25", 0.35", 0.53" OR 0.70".

SHIM THICKNESS FOR LUMINAIRE MAST ARMS MAY BE TYPICALLY 0.10", 0.25" OR 0.35".

SHIM MATERIAL SHALL BE ALUMINUM ALLOY.

SHIM THICKNESS SHALL BE IMPRESSED INTO EACH SHIM. NUMERALS SHALL BE 1/4" HIGH AND LEGIBLE.

THE CONTRACTOR SHALL SUBMIT TWO COPIES OF ALL SHIM SHOP DRAWINGS TO THE ENGINEER FOR APPROVAL.

(15) LEVELING SHIMS, DESIGNED FOR THE PURPOSE, SHALL BE USED WHEN PLUMBING POLES. THE USE OF WASHERS IN LIEU OF PROPER LEVELING SHIMS IS NOT ACCEPTABLE. LEVELING SHIMS SHALL BE USED ONLY BETWEEN THE TOP OF THE CONCRETE BASE AND A METALLIC BASE PLATE.

SHIMS SHALL BE LONG ENOUGH AND WIDE ENOUGH TO COMPLETELY COVER THE AREA UNDER THE LENGTH AND WIDTH OF THE BASE MOUNTING FLANGE.

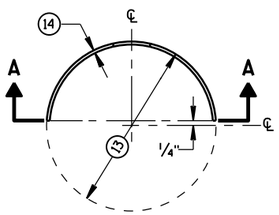

PLAN VIEW

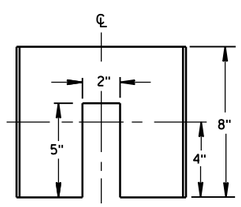

SECTION A-A

CIRCULAR CLAMP SHIM

(2 TO A SET)

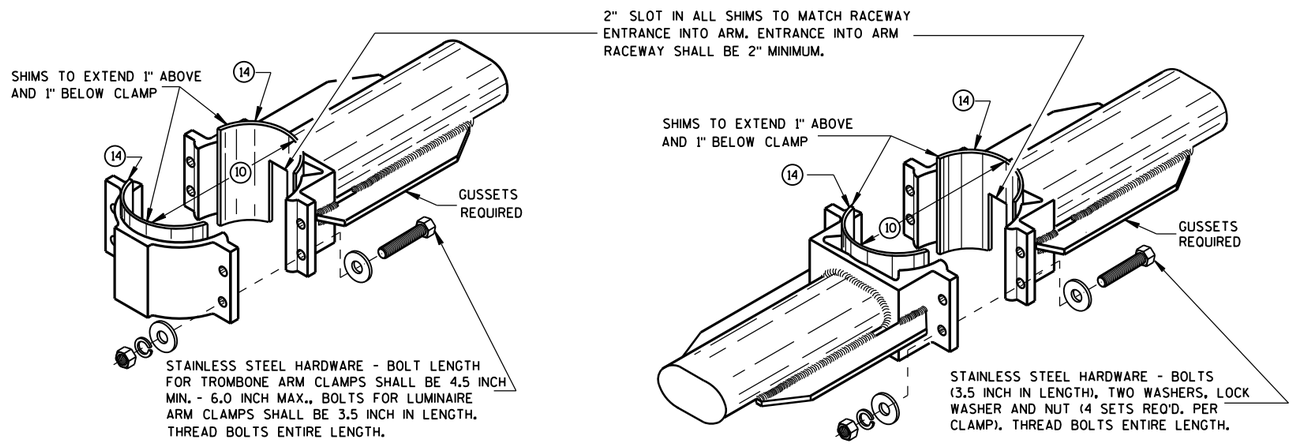

TYPICAL TROMBONE MAST ARM AND SINGLE LUMINAIRE MAST ARM MOUNTING CLAMP

TYPICAL LUMINAIRE MAST ARM (DOUBLE) MOUNTING BRACKETS

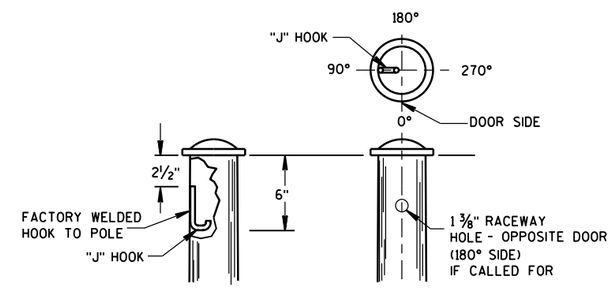

TYPICAL "J" HOOK LOCATION

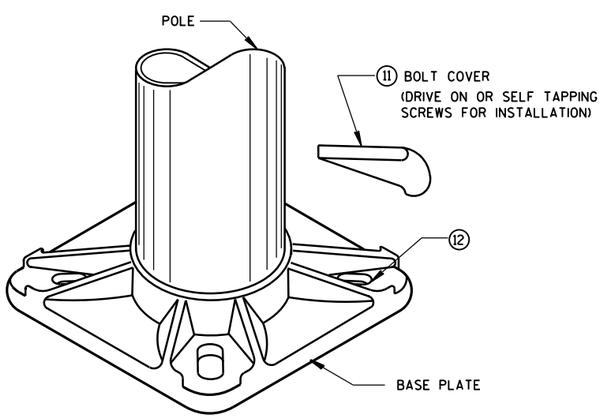

BASE PLATE

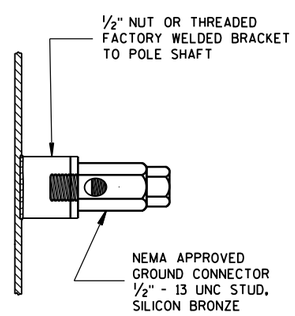

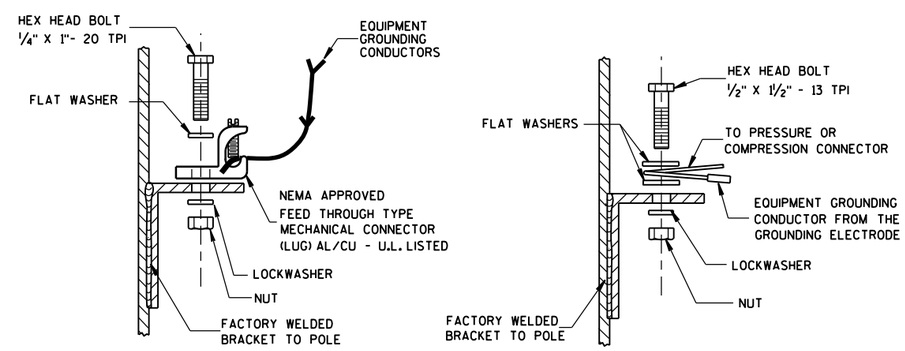

TYPICAL GROUNDING CONNECTIONS

NUT, BOLT AND WASHERS SHALL BE STAINLESS STEEL

HARDWARE DETAILS FOR POLE MOUNTINGS	
STATE OF WISCONSIN DEPARTMENT OF TRANSPORTATION	
APPROVED 2/7/2013 DATE	/S/ Ahmet Demirbilek STATE ELECTRICAL
FHWA	

6

6

S.D.D. 9 E 1-12g

S.D.D. 9 E 1-12g

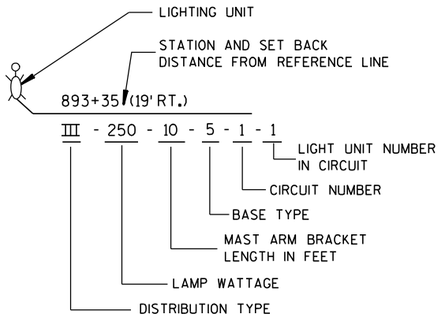

LIGHTING UNIT CODE
(TYPICAL)

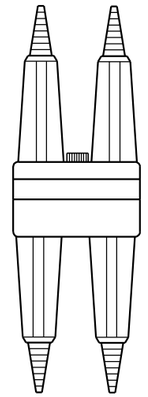

DETAIL "A"
BREAKAWY
DOUBLE POLE WITH
WATERPROOF
INSULATING BOOT

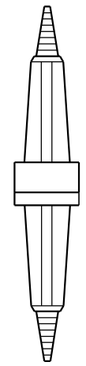

DETAIL "B"
BREAKAWY
SINGLE POLE WITH
WATERPROOF
INSULATING BOOT

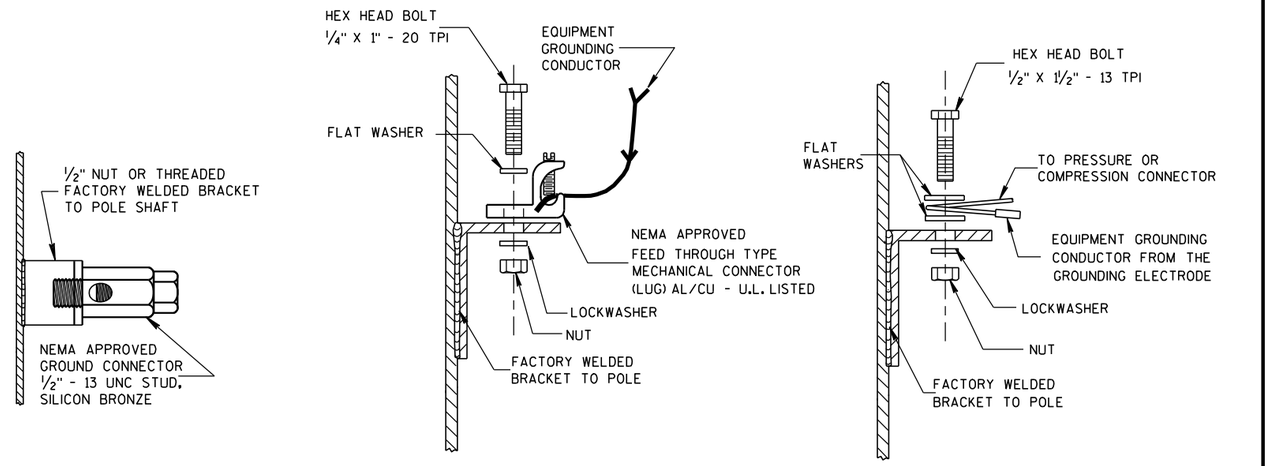

TYPICAL GROUNDING CONNECTIONS
NUT, BOLT, WASHERS AND LOCKWASHERS SHALL BE STAINLESS STEEL

GENERAL NOTES

DETAILS OF CONSTRUCTION, MATERIALS AND WORKMANSHIP NOT SHOWN ON THIS DRAWING SHALL CONFORM TO THE PERTINENT REQUIREMENTS OF THE CONTRACT.

THE EQUIPMENT GROUNDING CONNECTOR SHALL BE TAPED WITH 3 WRAPS (MINIMUM) OF APPROVED RUBBER TAPE AND THEN 3 WRAPS (MINIMUM) OF APPROVED VINYL TAPE TO COVER SHARP WIRE ENDS AFTER THE CONNECTION IS COMPLETED.

WHEN TRANSFORMER BASES ARE USED, ALL WIRING CONNECTIONS SHALL OCCUR WITHIN THE TRANSFORMER BASES.

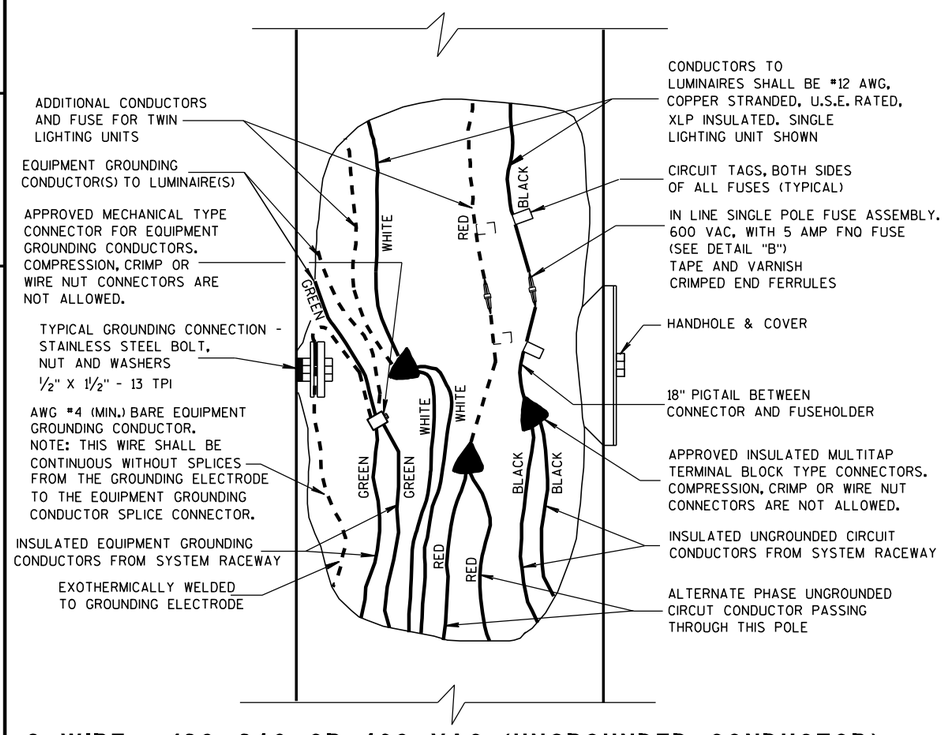

3 WIRE - 120, 240 OR 480 VAC (UNGROUNDED CONDUCTOR) WITH GROUNDED CONDUCTOR AND WITH EQUIPMENT GROUNDING CONDUCTOR

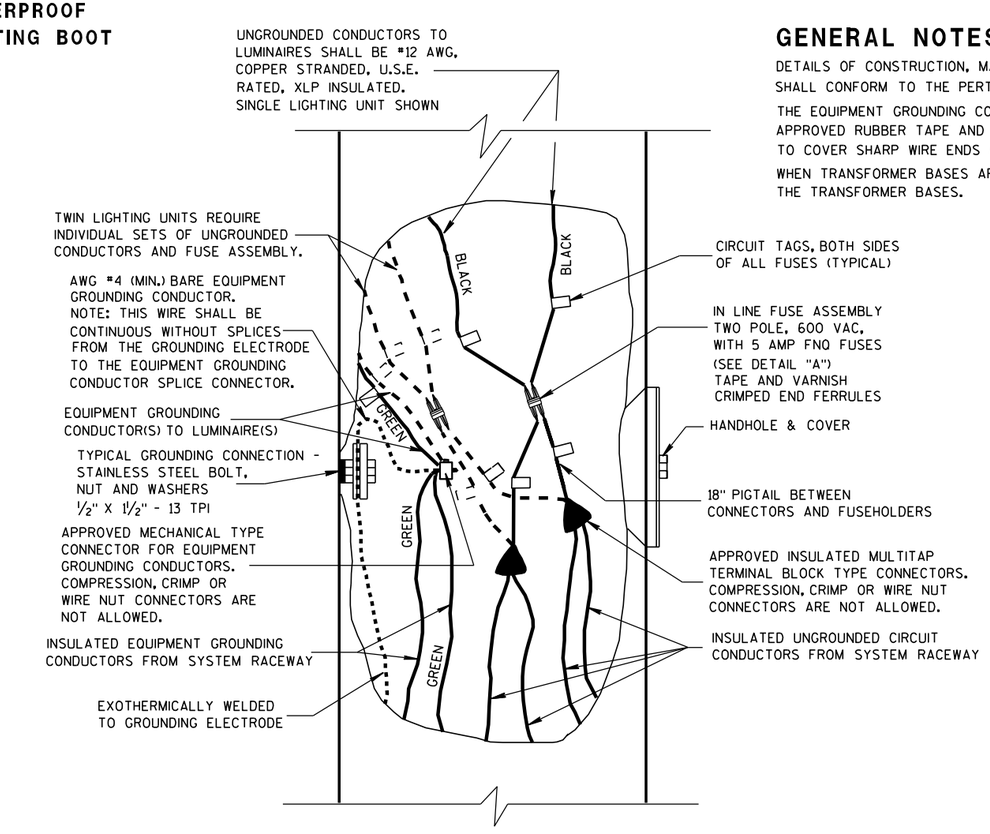

2 WIRE - 240 OR 480 VAC (UNGROUNDED CONDUCTORS) WITH EQUIPMENT GROUNDING CONDUCTOR

NON-FREEWAY LIGHTING UNIT POLE WIRING

STATE OF WISCONSIN
DEPARTMENT OF TRANSPORTATION

APPROVED
3/2/2011 — DATE
/S/ Thomas J. Gaspion — STATE ELECTRICAL ENGI
HWYS
FHWA

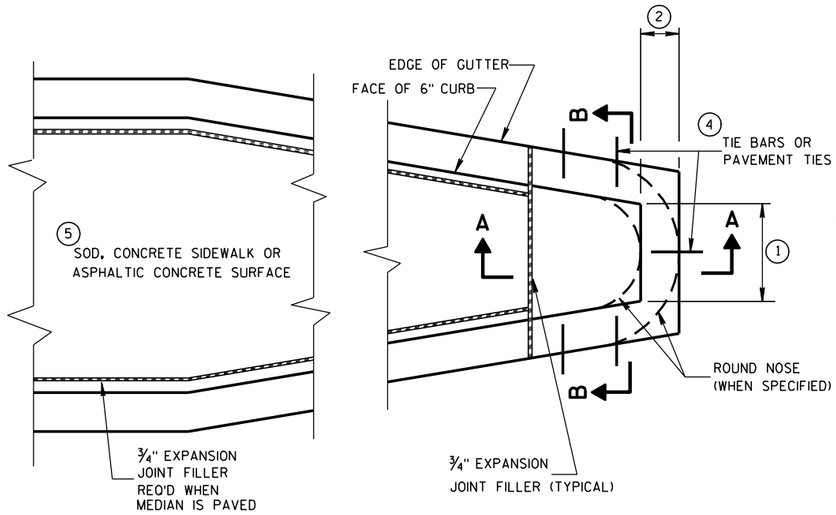

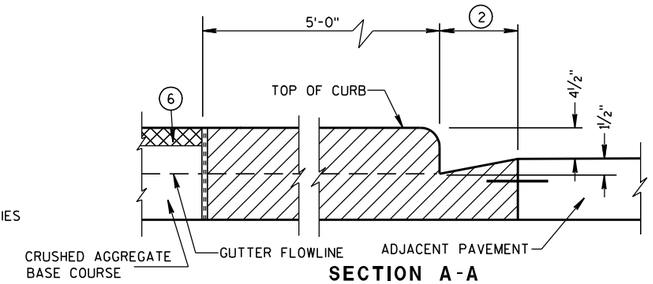

SECTION A-A

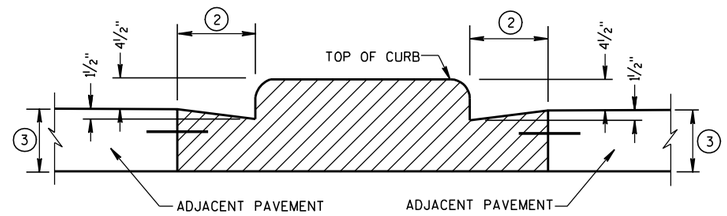

SECTION B-B

CONCRETE MEDIAN BLUNT NOSE DETAIL

GENERAL NOTES

DETAILS OF CONSTRUCTION, MATERIALS AND WORKMANSHIP NOT SHOWN ON THIS DRAWING SHALL CONFORM TO THE PERTINENT REQUIREMENTS OF THE STANDARD SPECIFICATIONS AND THE APPLICABLE SPECIAL PROVISIONS.

1. SEE PLAN FOR MEDIAN NOSE WIDTH AND RADIUS (FOR ROUND NOSE ALTERNATE).
2. WIDTH OF GUTTER TO MATCH EXISTING ADJACENT GUTTER OR AS SPECIFIED ELSEWHERE IN THE PLAN.
3. DEPTH EQUAL TO ADJACENT PAVEMENT. ADJACENT PAVEMENT STRUCTURE DETAILS ARE SHOWN ON THE PLAN. TYPICAL OPTIONS ARE:
   (1) NEW OR EXISTING CONCRETE PAVEMENT.
   (2) ASPHALTIC CONCRETE PAVEMENT OVER NEW OR EXISTING CONCRETE BASE COURSE.
   (3) ASPHALTIC CONCRETE PAVEMENT OVER CRUSHED AGGREGATE BASE COURSE.
4. TIE BARS OR PAVEMENT TIES REQUIRED IN NEW CONCRETE PAVEMENT OR CONCRETE BASE COURSE. TIE BARS SHALL BE NO. 4 X 2'-0" SPACED AT 2'-0" C-C.

   PAVEMENT TIES REQUIRED IN EXISTING CONCRETE BASE COURSE. PAVEMENT TIES SHALL BE NO. 6 X 1'-0" SPACED AT 3'-0" C-C INSTALLED ON A HORIZONTAL SKEW OF 6:1. THE DIRECTION OF SKEW SHALL ALTERNATE AFTER EVERY ONE OR TWO BARS.
5. SURFACE TYPE AND DETAILS ARE SHOWN ELSEWHERE IN THE PLAN.

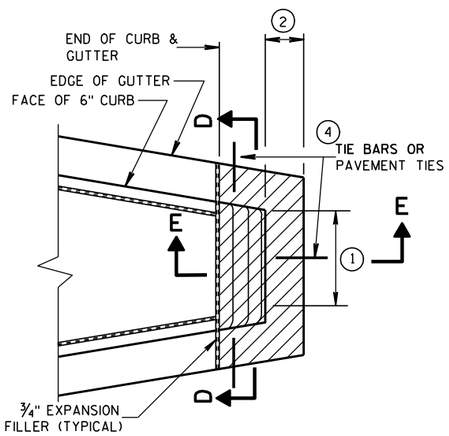

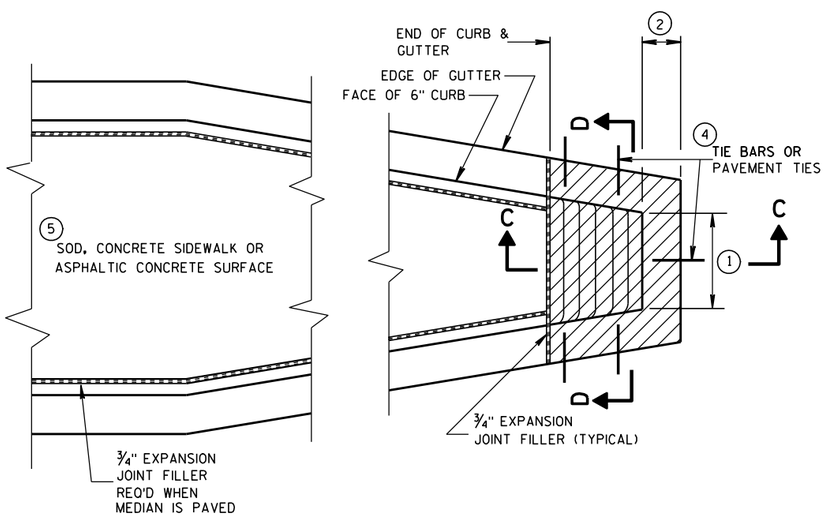

CONCRETE MEDIAN SLOPED NOSE TYPE 1

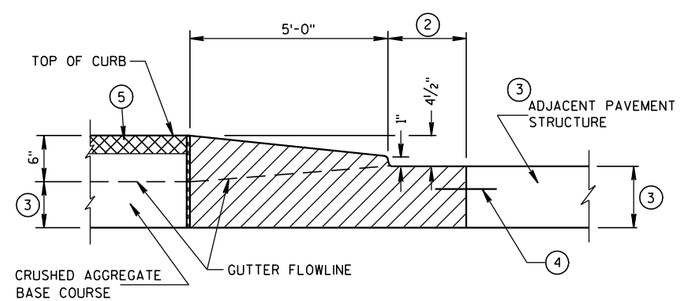

SECTION C-C

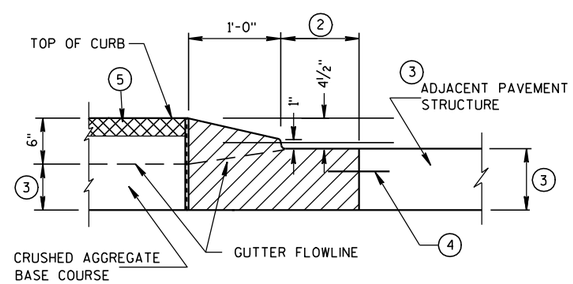

SECTION E-E

CONCRETE MEDIAN SLOPED NOSE TYPE 2

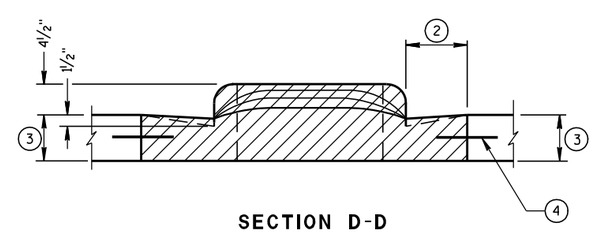

SECTION D-D

CONCRETE MEDIAN NOSE	
STATE OF WISCONSIN DEPARTMENT OF TRANSPORTATION	
APPROVED 6/8/2006 DATE	/S/ Jerry H. ---- ROADWAY STANDARDS ENGINEER
FHWA	NT

LEGEND

- DOWELED JOINT
- TIED JOINT
- EXPANSION JOINT
- POTENTIAL DOWELED EXPANSION JOINT
- TRUCK APRON
- CENTRAL ISLAND
- UTILITY STRUCTURES

GENERAL NOTES

MAXIMUM JOINT SPACING IS IN ACCORDANCE WITH THE TABLE SHOWN ON SDD 13C18 SHEET "a".

USE AN EXPANSION JOINT FILLER MEETING THE REQUIREMENTS OF STANDARD SPECIFICATION 415.

DO NOT DOWEL OR TIE THE TRUCK APRON TRANSVERSE JOINTS.

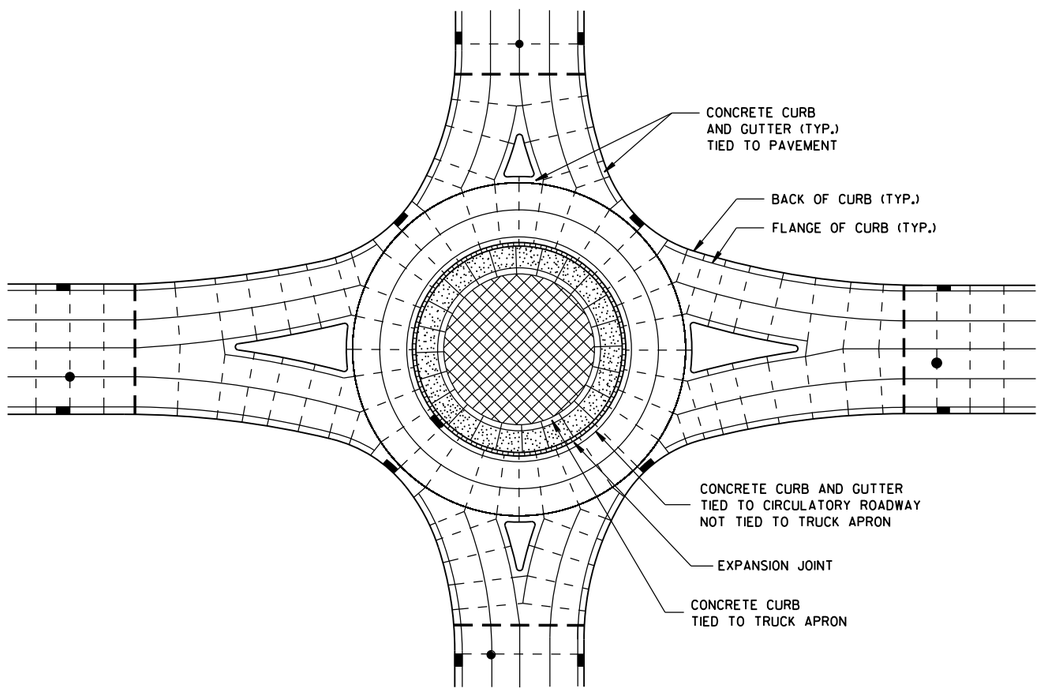

ISOLATED CIRCLE JOINT LAYOUT FOR ROUNDABOUTS

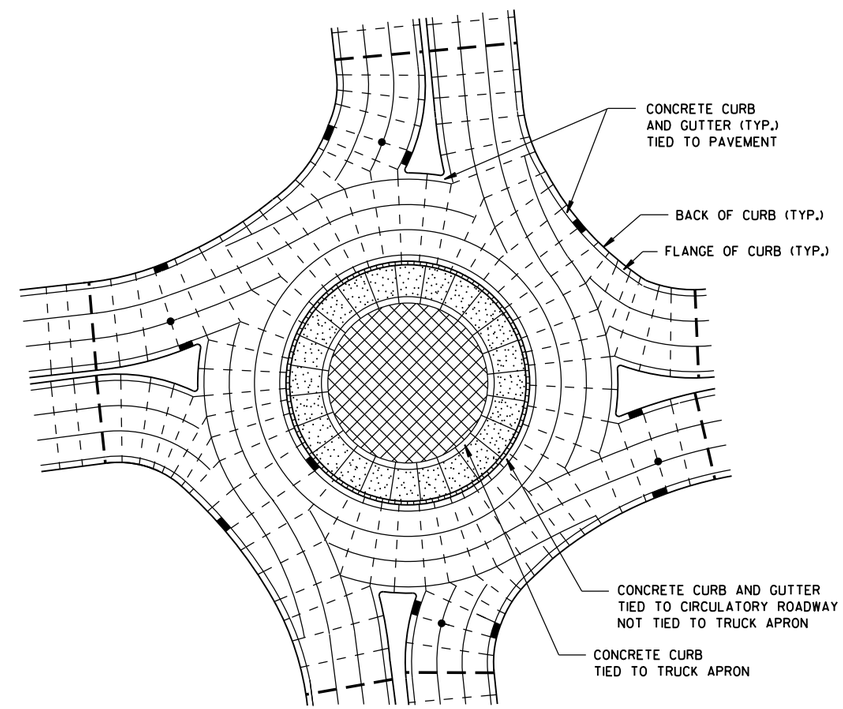

PINWHEEL JOINT LAYOUT FOR ROUNDABOUTS

CONCRETE PAVEMENT JOINTING AND STEEL REINFORCEMENT IN ROUNDABOUTS
STATE OF WISCONSIN DEPARTMENT OF TRANSPORTATION
APPROVED 5-3-2013 DATE — /S/ Deb Bischoff PAVEMENT POLICY & DE NEER FHWA

GENERAL NOTES

DETAILS OF CONSTRUCTION, MATERIALS AND WORKMANSHIP NOT SHOWN ON THIS DRAWING SHALL CONFORM TO THE PERTINENT REQUIREMENTS OF THE STANDARD SPECIFICATIONS AND THE APPLICABLE SPECIAL PROVISIONS.

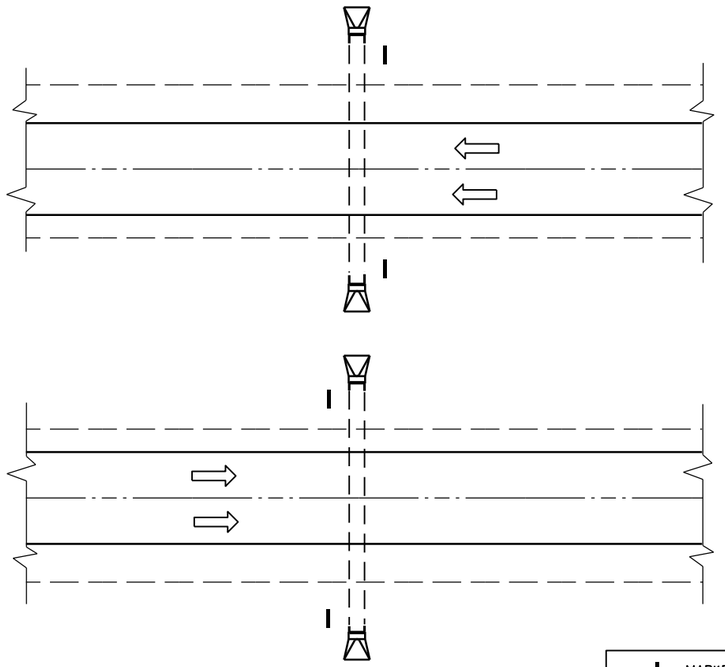

PLAN VIEW

DIVIDED HIGHWAY

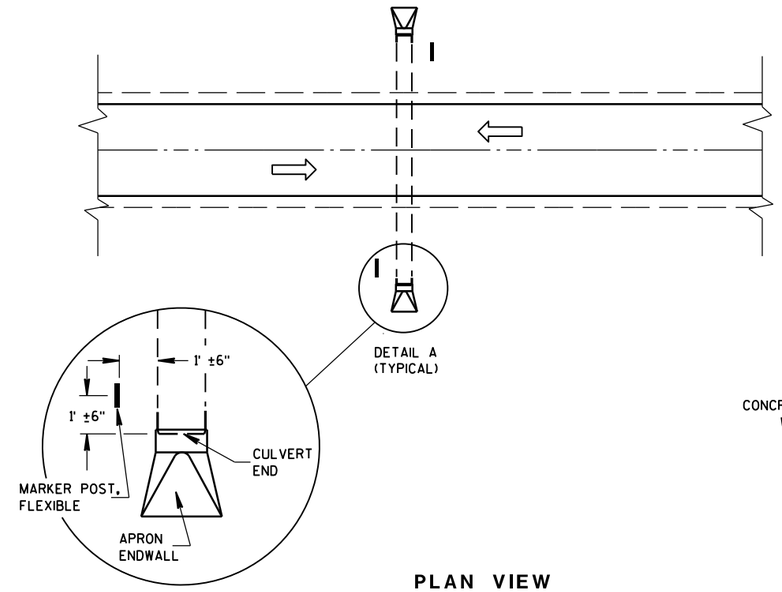

DETAIL A
(TYPICAL)

PLAN VIEW

UNDIVIDED HIGHWAY

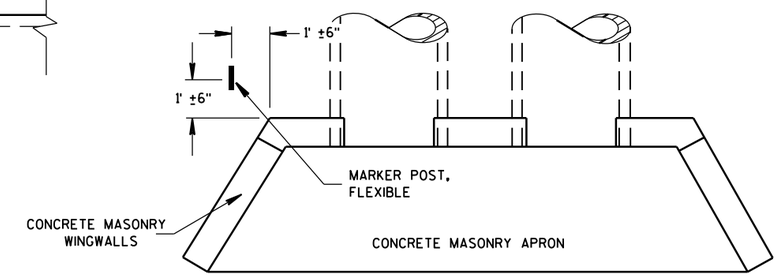

PLAN VIEW

CONCRETE MASONRY ENDWALLS FOR CULVERT PIPE AND PIPE ARCH

MARKER POST, FLEXIBLE

DIRECTION OF TRAFFIC FLOW

FLEXIBLE MARKER POST LOCATION

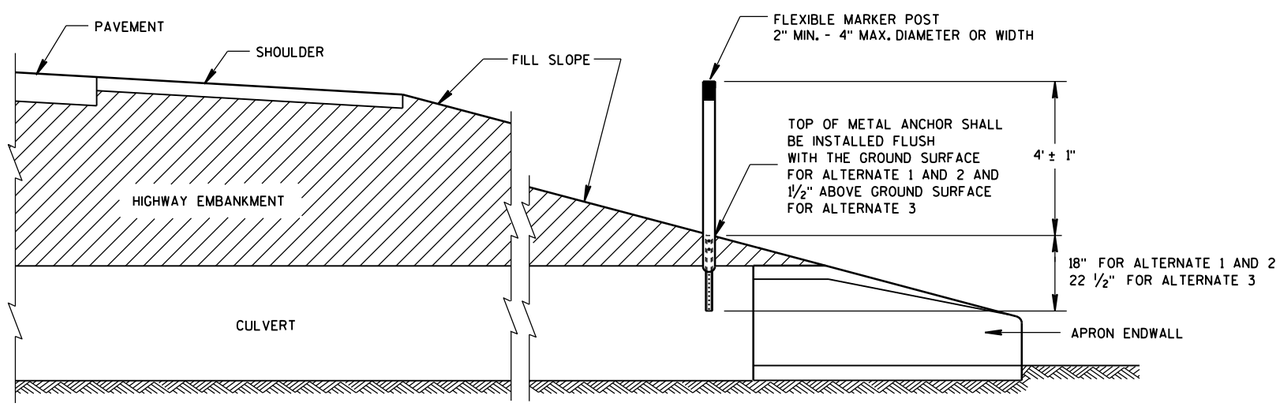

CROSS SECTION

FLEXIBLE MARKER POST

FLEXIBLE MARKER POST FOR CULVERT END

STATE OF WISCONSIN
DEPARTMENT OF TRANSPOR

6

S.D.D. 15 A 3-2a

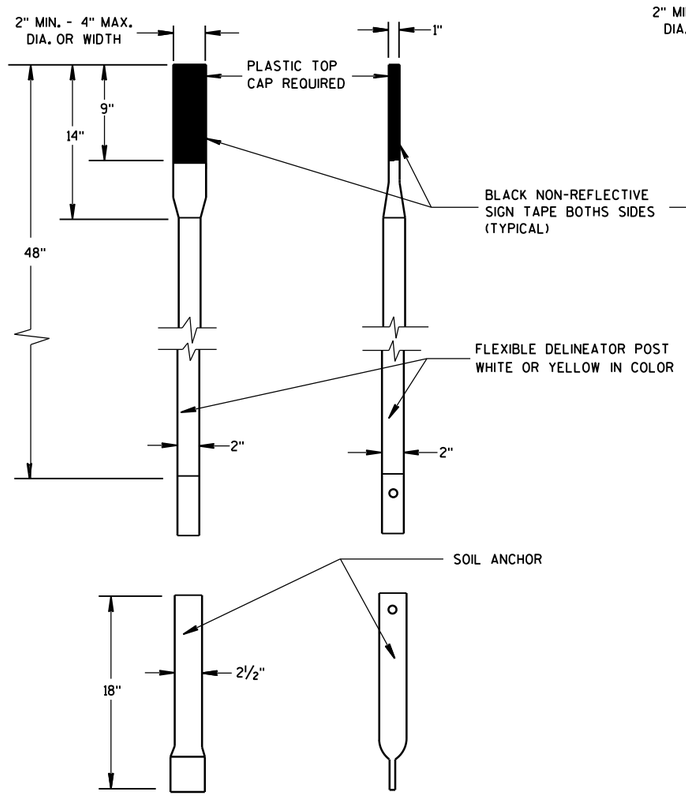

FRONT VIEW SIDE VIEW

ALTERNATE 1

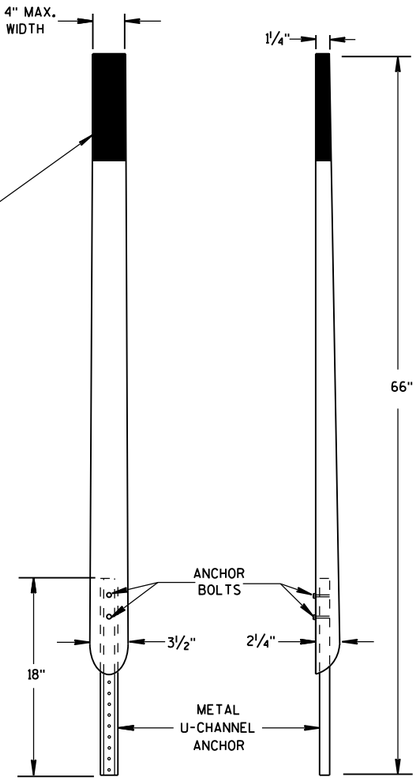

FRONT VIEW SIDE VIEW

ALTERNATE 2

FLEXIBLE MARKER POSTS

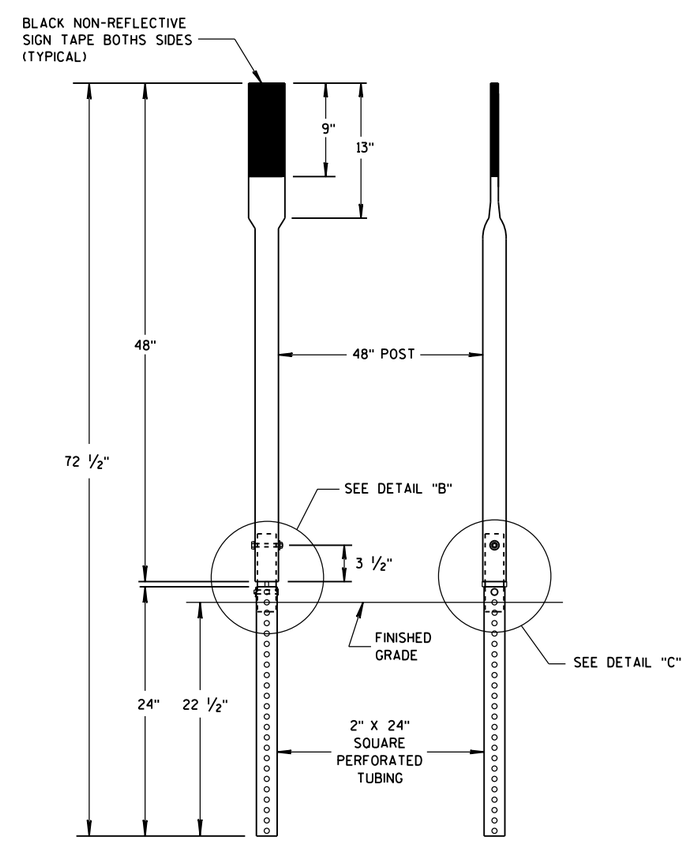

FRONT VIEW SIDE VIEW

ALTERNATE 3

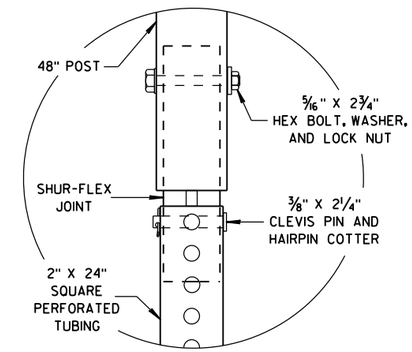

DETAIL B

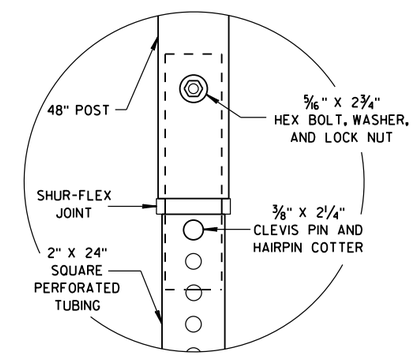

DETAIL C

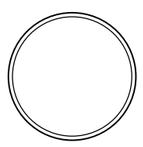

SECTION A-A

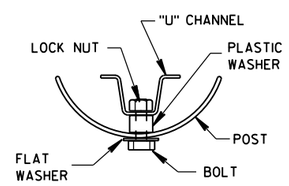

SECTION B-B

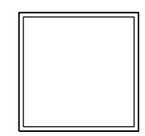

SECTION C-C

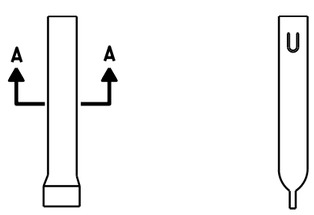

FRONT VIEW SIDE VIEW

ALTERNATE 1

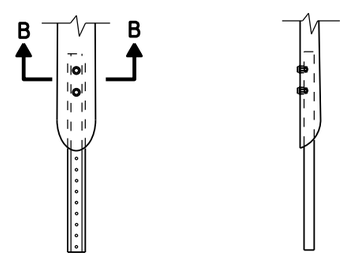

FRONT VIEW SIDE VIEW

ALTERNATE 2

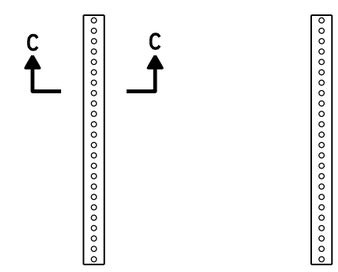

FRONT VIEW SIDE VIEW

ALTERNATE 3

FLEXIBLE MARKER POST ANCHORS

FLEXIBLE MARKER POST
FOR CULVERT END

STATE OF WISCONSIN
DEPARTMENT OF TRANSPORTATION

APPROVED
10/1/2012 /S/ Travis Feltes
DATE STATE TRAFFIC ENGINEER
FHWA

6

6

S.D.D. 15 A 3-2b

S.D.D. 15 A 3-2b

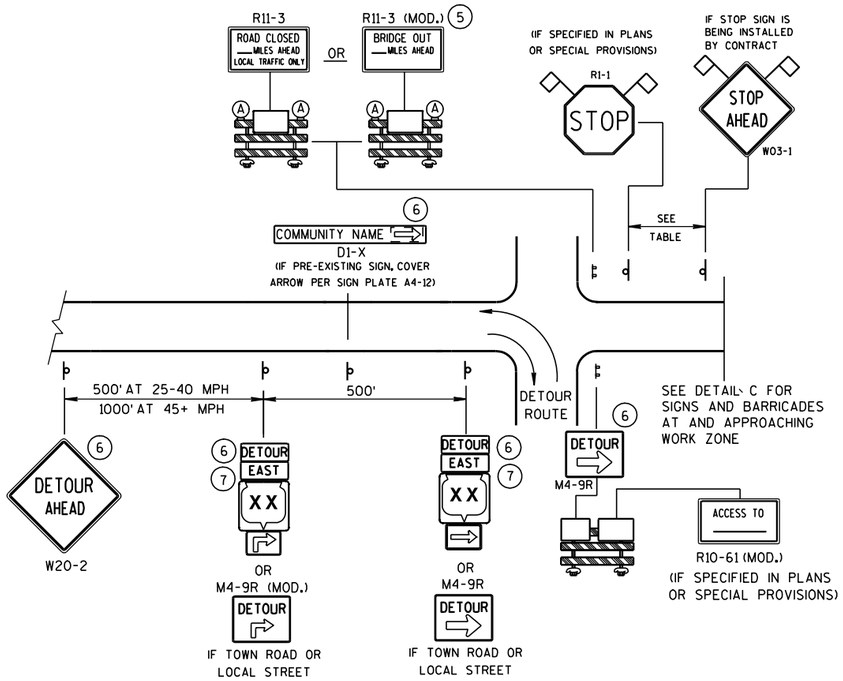

DETAIL A

MAINLINE CLOSURE WITH POSTED DETOUR

WORK ZONE GREATER THAN ½ MILE FROM DETOUR ROUTE (1000 FEET IF URBAN)

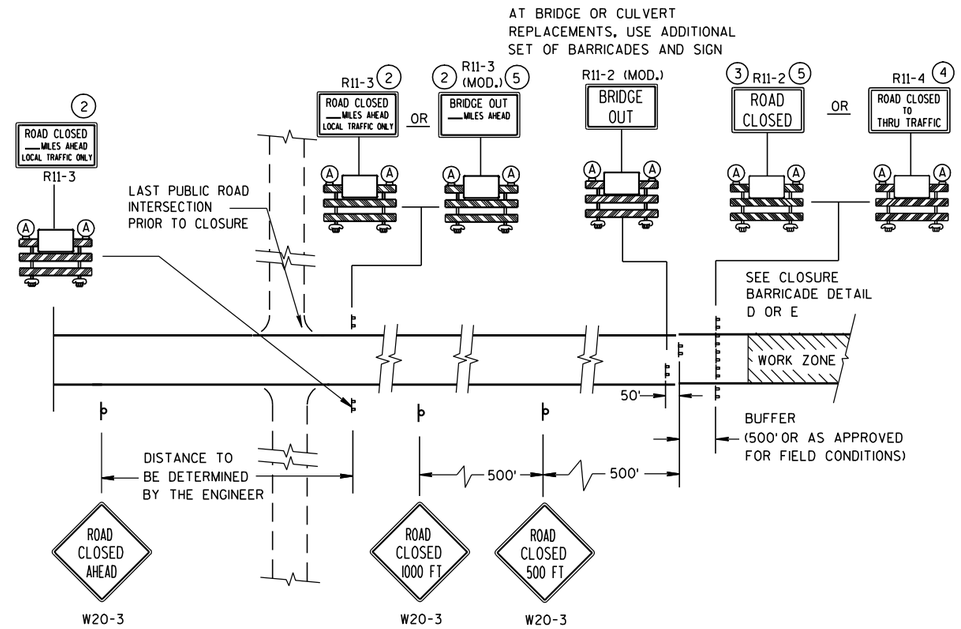

DETAIL C

MAINLINE CLOSURE, NO POSTED DETOUR

SPEED LIMIT (MPH)	"STOP AHEAD" ADVANCE WARNING DISTANCE (FT)
25	200
30	200
35	350
40	350
45	500
50	550
55	750

SEE SDD 15C2-4b FOR GENERAL NOTES AND FOOTNOTES 1 THROUGH 7

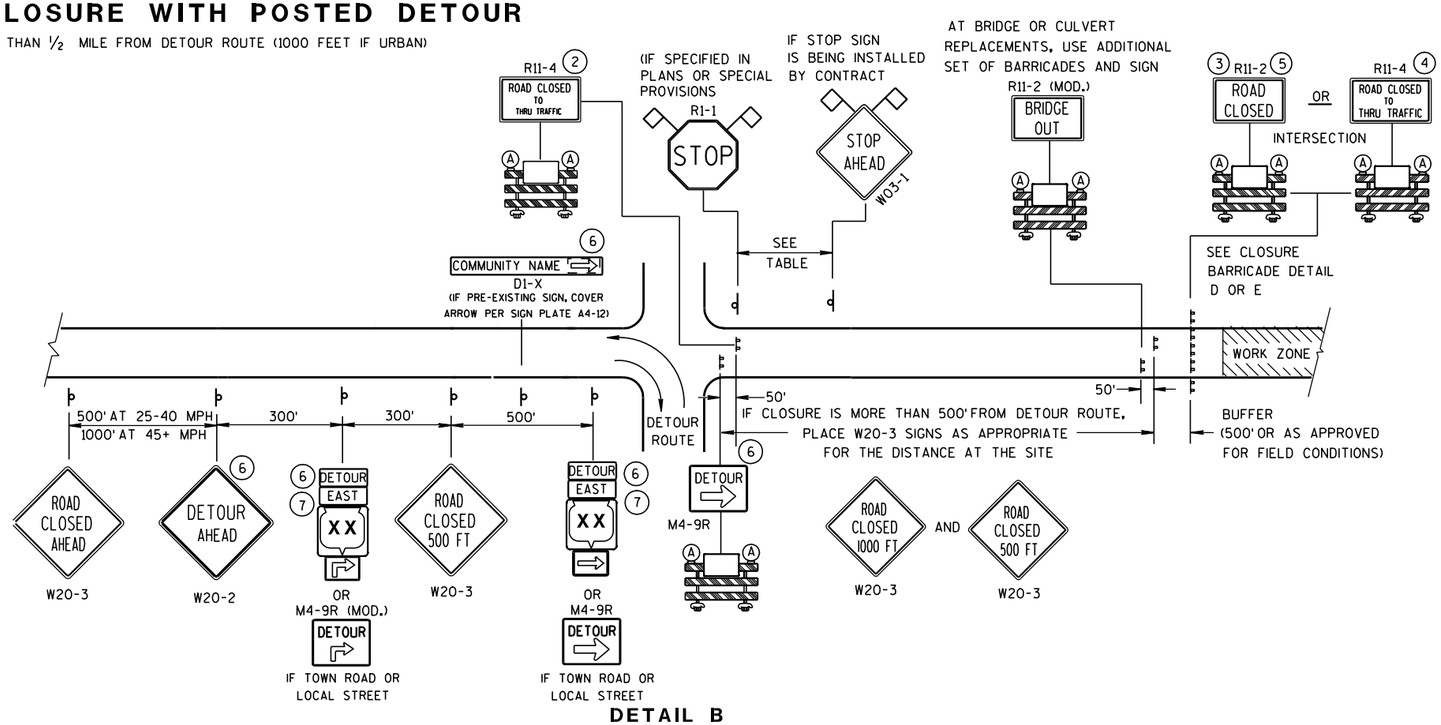

DETAIL B

MAINLINE CLOSURE WITH POSTED DETOUR

WORK ZONE LESS THAN ½ MILE FROM DETOUR ROUTE (1000 FEET IF URBAN)

LEGEND

- POST MOUNTED SIGN
- TYPE III BARRICADES
- TYPE "A" LOW INTENSITY FLASHING WARNING LIGHT (FOR NIGHT USE)
- WORK ZONE
- DETOUR / EAST — M4-8 / M3-X
- XX — M1-4; OR COUNTY XX — M1-5A; OR XX — M1-6
- M05-1 OR M06-1
- FLAGS, 16" X 16" MIN., (ORANGE)

BARRICADES AND SIGNS FOR MAINLINE CLOSURES

STATE OF WISCONSIN
DEPARTMENT OF TRANSPORTATION

6

S.D.D. 15 C 2-4a

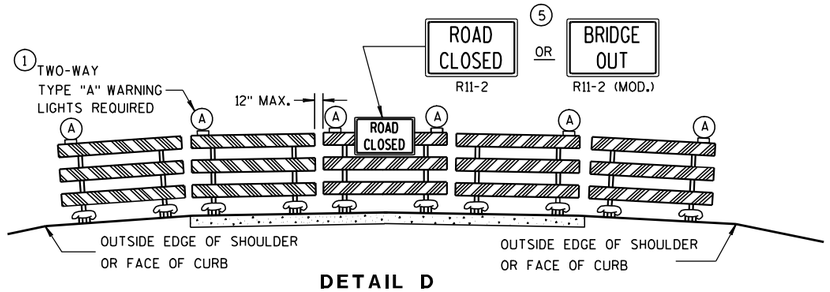

DETAIL D

ROAD CLOSURE BARRICADE DETAIL

APPROACH VIEW

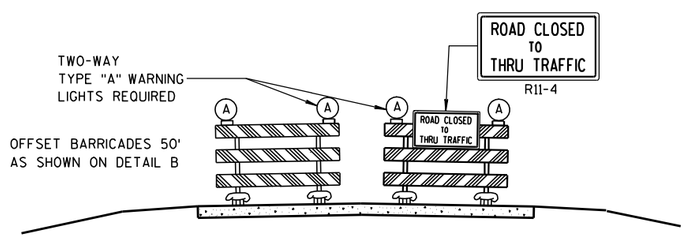

DETAIL E

LANE CLOSURE BARRICADE DETAIL

APPROACH VIEW

SEE SDD 15C2-4a FOR LEGEND

GENERAL NOTES

THE EXACT NUMBER, LOCATION, AND SPACING OF ALL SIGNS AND BARRICADES SHALL BE ADJUSTED TO FIT FIELD CONDITIONS AS APPROVED BY THE ENGINEER.

ANY SIGNS TEMPORARY OR EXISTING, WHICH CONFLICT WITH TRAFFIC CONTROL "IN USE" SHALL BE REMOVED OR COVERED AS NEEDED AND AS APPROVED BY THE ENGINEER.

THE SPACING BETWEEN TRAFFIC CONTROL SIGNS SHOULD BE ADJUSTED TO NOT CONFLICT WITH AND SHOULD PROVIDE A DESIRABLE MINIMUM OF 200 FEET CLEARANCE TO EXISTING SIGNS THAT WILL REMAIN IN PLACE.

BARRICADES THAT MUST BE MOVED FOR A WORK OPERATION SHALL BE IMMEDIATELY RE-ESTABLISHED UPON COMPLETION OF THE OPERATION OR, FOR CONTINUING OPERATIONS, AT THE END OF EACH WORKING DAY.

SIGNS THAT WILL BE IN PLACE LESS THAN 7 CONTINUOUS DAYS AND NIGHTS MAY BE MOUNTED ON PORTABLE SUPPORTS.

ALL TYPE III BARRICADES SHALL HAVE RAILS REFLECTORIZED ON BOTH FACES. STRIPES SHALL BE PROPERLY SLOPED DOWN TOWARD THE TRAFFIC SIDE OR AS SHOWN IN THE ROAD CLOSURE BARRICADE DETAIL D FOR FULL ROAD CLOSURES.

TYPE "A" LOW-INTENSITY FLASHING WARNING LIGHTS SHALL BE VISIBLE ON BOTH SIDES OF THE BARRICADE.

THE R11-2, R11-3, M4-9, R11-4 AND R10-61 SIGNS PLACED ON BARRICADES SHALL COVER NO MORE THAN THE TOP RAIL. THE SIGNS SHALL NOT COVER ANY PORTION OF THE MIDDLE OR BOTTOM RAILS.

THE REFLECTIVE SHEETING USED ON R11-2, R11-3, R11-4, R10-61 AND R1-1 SIGNS SHALL COMPLY WITH SUBSECTION 637.2.2.2 OF THE STANDARD SPECIFICATIONS.

"WO AND "MO" SIGNS ARE THE SAME AS "W" AND "M" SIGNS EXCEPT THE BACKGROUND IS ORANGE.

ALL SIGNS SHALL BE 48" X 48" UNLESS OTHERWISE NOTED BELOW:

- R11-2 SHALL BE 48" X 30".
- R11-3, R11-4 AND R10-61 SHALL BE 60" X 30".
- M4-9 SHALL BE 30" X 24".
- M3-X AND M4-8 SHALL BE 24" X 12". (30" X 15" IF NEEDED TO MATCH EXISTING SIGNS.)
- M1-4, M1-5A, AND M1-6 SHALL BE 24" X 24". (36" X 36" IF NEEDED TO MATCH EXISTING SIGNS.)
- M05-1 AND M06-1 SHALL BE 21" X 21". (30" X 30" IF NEEDED TO MATCH EXISTING SIGNS.)
- D1-X SHALL BE AS SHOWN ON SPECIFIC PROJECT SIGNING DETAIL SHEETS.
- R1-1 SHALL BE 36" X 36".

(1) TWO WARNING LIGHTS SHALL BE PROVIDED ON THE CENTER BARRICADE AND A MINIMUM OF ONE WARNING LIGHT SHALL BE PROVIDED ON EACH OF THE OTHER BARRICADES WITHIN THE ROADWAY LIMITS. SPACING OF THE WARNING LIGHTS SHALL BE UNIFORM TO THE EDGE OF ROADWAY AS SHOWN (APPROX. 8-FOOT LIGHT SPACING).

(2) THESE SIGNS AND BARRICADES ARE NOT REQUIRED IF ROAD CLOSURE BEGINS AT INTERSECTION.

(3) FOR ROAD CLOSURE WITHOUT LOCAL ACCESS TO PROJECT, SEE ROAD CLOSURE BARRICADE DETAIL D.

(4) FOR ROAD CLOSURE WITH LOCAL ACCESS TO PROJECT, SEE LANE CLOSURE BARRICADE DETAIL E.

(5) FOR BRIDGE OR CULVERT REPLACEMENTS, SUBSTITUTE "BRIDGE OUT" INSTEAD OF "ROAD CLOSED" ON R11-2 AND R11-3 SIGNS.

(6) INSTALL DETOUR AND COMMUNITY GUIDE SIGNS AND ARROWS ONLY IF SPECIFIED IN THE CONTRACT. IF THERE ARE EXISTING ROUTE MARKER ASSEMBLIES THAT WILL REMAIN IN PLACE, ADJUST THE LOCATION OF THE DETOUR ROUTE SIGNS TO CORRESPOND WITH THE EXISTING ASSEMBLIES. MODIFY EXISTING SIGNS WHERE POSSIBLE. SEE SPECIFIC PROJECT DETOUR SIGNING DETAIL SHEETS. IF DETOUR SIGNS ARE BEING INSTALLED BY OTHERS, PLACE THE CONTRACTED TRAFFIC CONTROL SIGNS TO ALLOW FOR PLACEMENT OF ALL WARNING, DETOUR AND GUIDE SIGNS AS SHOWN.

(7) "EAST" CARDINAL DIRECTION MARKERS AND RIGHT TURN ARROWS ARE SHOWN. USE OTHER CARDINAL DIRECTIONS AND ARROWS AS APPROPRIATE.

BARRICADES AND SIGNS FOR MAINLINE CLOSURES

STATE OF WISCONSIN
DEPARTMENT OF TRANSPORTATION

APPROVED

9/16/03 — DATE

/S/ Thomas N. N[illegible] — CHIEF SIGNS AND MAR[illegible]INEER

FHWA

THIS DRAWING PROVIDES GENERAL GUIDANCE ON TYPICAL DETOUR SIGN LAYOUT AND SPACING. SEE PROJECT DETOUR SIGNING SHEETS FOR SPECIFIC DETAILS FOR EACH PROJECT.

GENERAL NOTES

THE EXACT NUMBER, LOCATION AND SPACING OF ALL SIGNS SHALL BE ADJUSTED TO FIT FIELD CONDITIONS AS APPROVED BY THE ENGINEER.

IF THERE ARE EXISTING ROUTE MARKER ASSEMBLIES THAT WILL REMAIN IN PLACE, ADJUST THE LOCATION OF THE DETOUR ROUTE SIGNS TO CORRESPOND WITH THE EXISTING ASSEMBLIES. SEE SPECIFIC PROJECT DETOUR SIGNING DETAIL SHEETS. MODIFY EXISTING SIGNS WHERE POSSIBLE.

THE SPACING BETWEEN TRAFFIC CONTROL AND DETOUR SIGNS SHOULD BE ADJUSTED TO NOT CONFLICT WITH AND TO PROVIDE A DESIRABLE MINIMUM OF 200 FEET CLEARANCE TO EXISTING SIGNS THAT WILL REMAIN IN PLACE.

ANY SIGNS TEMPORARY OR EXISTING, WHICH CONFLICT WITH TRAFFIC CONTROL "IN USE", SHALL BE REMOVED OR COVERED AS NEEDED AND AS APPROVED BY THE ENGINEER.

SIGNS THAT WILL BE IN PLACE LESS THAN 7 CONTINUOUS DAYS AND NIGHTS MAY BE MOUNTED ON PORTABLE SUPPORTS.

"MO" SIGNS ARE THE SAME AS "M" SIGNS EXCEPT THE BACKGROUND IS ORANGE.

SIGN SIZES SHALL BE AS FOLLOWS:

- M3-X AND M4-8 SHALL BE 24" X 12". (30" X 15" IF NEEDED TO MATCH EXISTING SIGNS.)
- M1-4, M1-5A, AND M1-6 SHALL BE 24" X 24". (36" X 36" IF NEEDED TO MATCH EXISTING SIGNS.)
- M05-1 AND M06-1 SHALL BE 21" X 21". (30" X 30" IF NEEDED TO MATCH EXISTING SIGNS.)
- M4-9 SHALL BE 30" X 24".
- M4-8a SHALL BE 24" X 18".
- G20-51 SHALL BE 60" X 24".
- W20-2 SHALL BE 48" X 48".
- D1-X SHALL BE AS SHOWN ON SPECIFIC PROJECT SIGNING DETAIL SHEETS.

* OPTIONAL SIGNS. SEE SPECIFIC PROJECT DETOUR SIGNING DETAIL SHEETS.

** FOR A TOWN ROAD OR LOCAL STREET DETOURED ONTO A STATE TRUNK HIGHWAY, PLACE A ROAD NAME PLAQUE ABOVE THE M4-9 SIGN AS SPECIFIED IN THE CONTRACT.

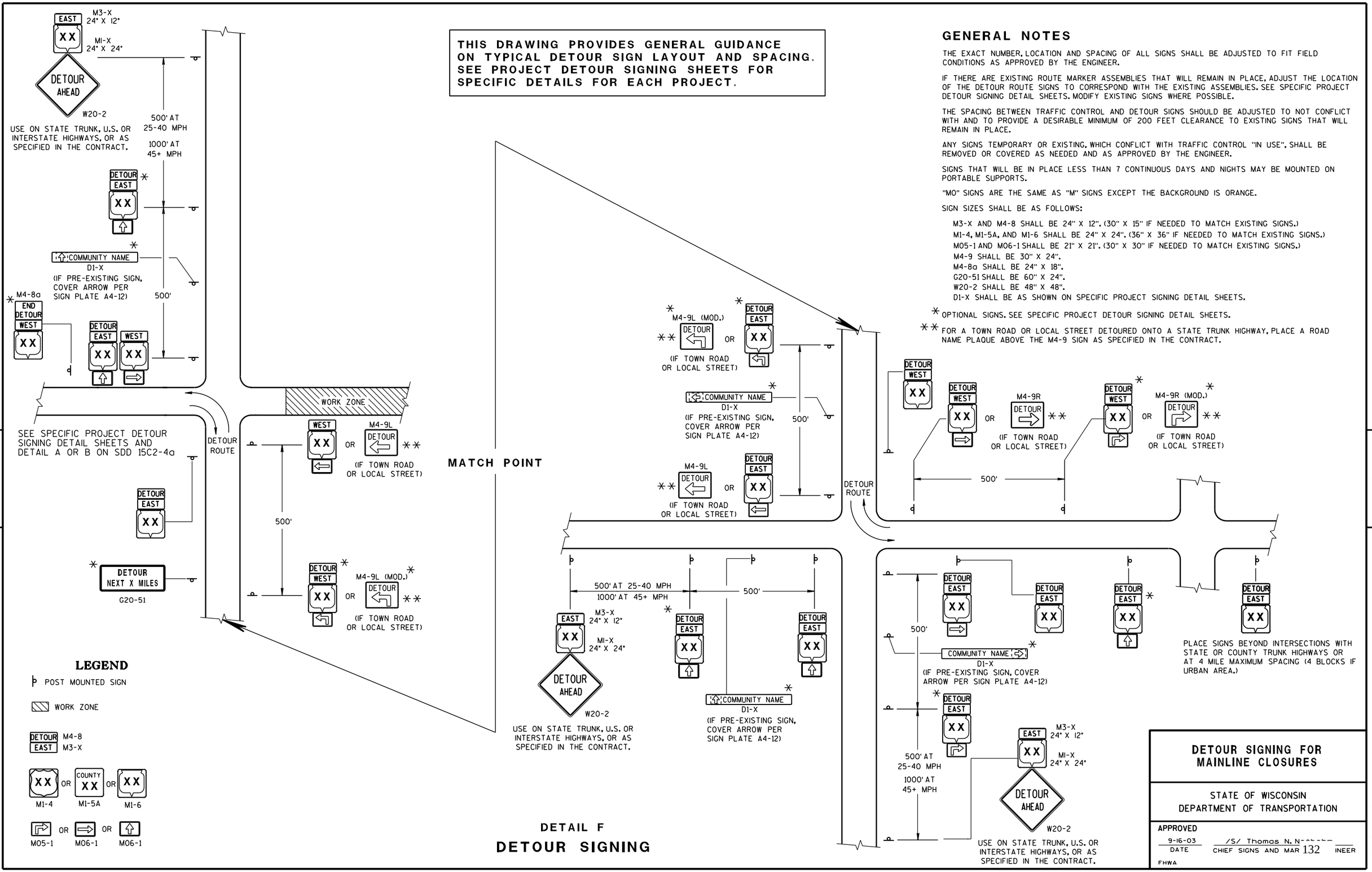

DETAIL F

DETOUR SIGNING

DETOUR SIGNING FOR MAINLINE CLOSURES

STATE OF WISCONSIN
DEPARTMENT OF TRANSPORTATION

APPROVED
9-16-03 DATE
/S/ Thomas N. N CHIEF SIGNS AND MAR INEER
FHWA

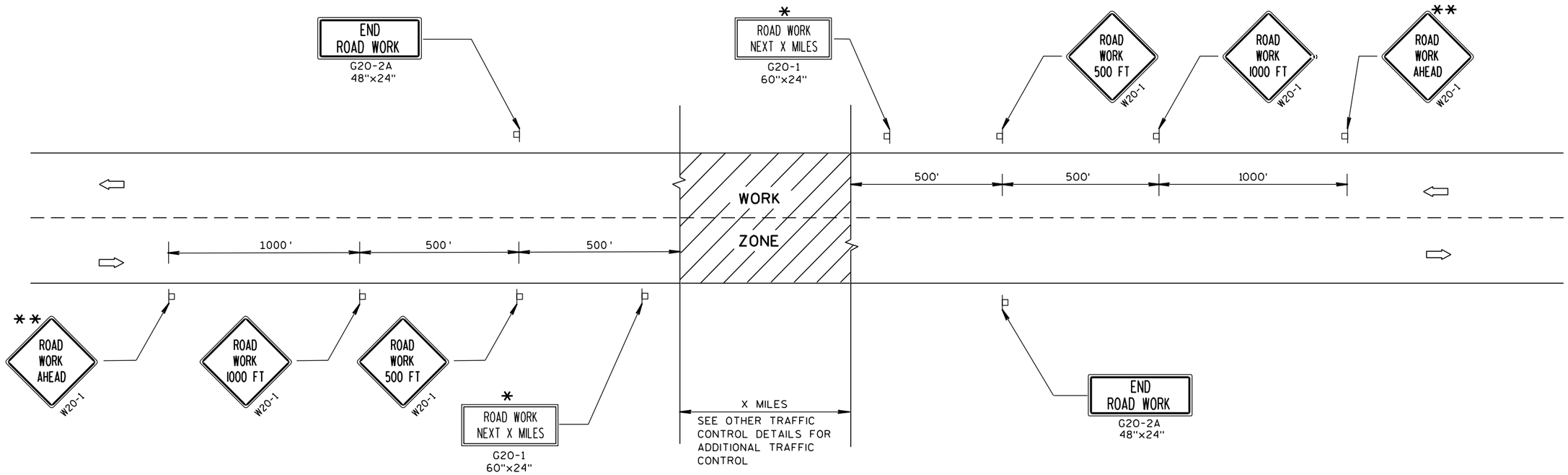

TYPICAL SIDEROAD APPROACH WARNING SIGN DETAIL

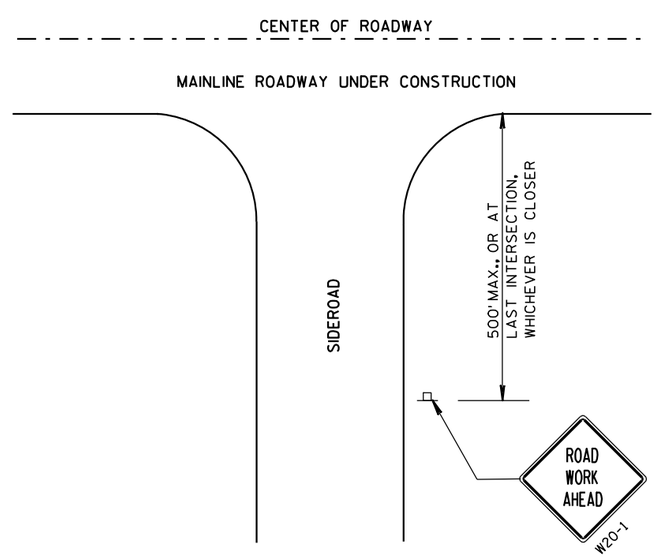

GENERAL NOTES

THE EXACT NUMBER, LOCATION, AND SPACING OF ALL SIGNS AND DEVICES SHALL BE ADJUSTED TO FIT FIELD CONDITIONS.

THE SPACING BETWEEN TRAFFIC CONTROL SIGNS SHOULD BE ADJUSTED TO NOT CONFLICT WITH AND SHOULD PROVIDE A MINIMUM OF 200 FEET (500 FEET DESIRABLE) CLEARANCE TO EXISTING SIGNS THAT WILL REMAIN IN PLACE.

ALL SIGNS ARE 48"x48" UNLESS OTHERWISE NOTED.

SIGNS THAT WILL BE IN PLACE LESS THAN 7 CONTINUOUS DAYS AND NIGHTS MAY BE MOUNTED ON PORTABLE SUPPORTS.

IF A "STOP" SIGN MUST BE REMOVED FOR A WORK OPERATION, A TEMPORARY "STOP" SIGN SHALL BE PLACED PRIOR TO THE SIGN REMOVAL, OR A FLAGGER SHALL BE PROVIDED UNTIL THE SIGN IS RE-ESTABLISHED.

* OMIT G20-1 SIGNS IF LENGTH OF WORK AREA IS 2 MILES OR LESS.

** PLACE ADDITIONAL W20-1 "ROAD WORK AHEAD" SIGN IF WORK AREA WITHIN THE PROJECT IS SEPARATED BY MORE THAN 2 MILES FROM PREVIOUS WORK AREA OR SIGNING.

LEGEND

POST MOUNTED SIGN

DIRECTION OF TRAFFIC FLOW

TRAFFIC CONTROL, ADVANCE WARNING SIGNS 45 M.P.H. OR GREATER TWO-WAY UNDIVIDED ROAD OPEN TO TRAFFIC

STATE OF WISCONSIN
DEPARTMENT OF TRANSPORTATION

APPROVED
5/23/00 — DATE
/S/ Chester J. [illegible] — CHIEF SIGNS AND MARK[illegible] NEER
FHWA

6

S.D.D. 15 C 4-1

GENERAL NOTES

DETAILS OF INSTALLATION, MATERIALS AND WORKMANSHIP NOT SHOWN ON THIS DRAWING SHALL CONFORM TO THE PERTINENT REQUIREMENTS OF THE STANDARD SPECIFICATIONS AND APPLICABLE SPECIAL PROVISIONS.

ALL LETTERS, ARROWS AND SYMBOLS SHALL BE IN CONFORMANCE WITH REQUIREMENTS INCLUDED IN "STANDARD ALPHABETS FOR HIGHWAY SIGNS AND PAVEMENT MARKING" BOOK BY THE FEDERAL HIGHWAY ADMINISTRATION. ALL LETTERS, ARROWS AND SYMBOLS SHALL BE WHITE AND REFLECTORIZED. SMALL DIFFERENCES IN DIMENSIONS WITHIN THE TOLERANCES OF THAT BOOK ARE ACCEPTABLE.

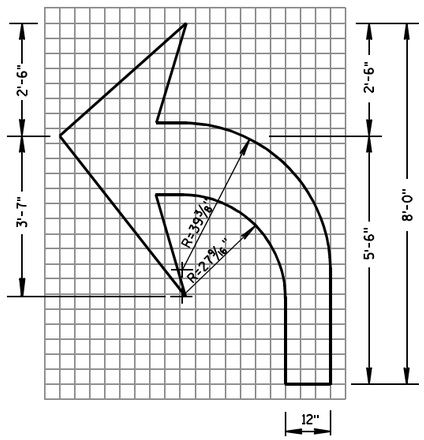

TYPE 2

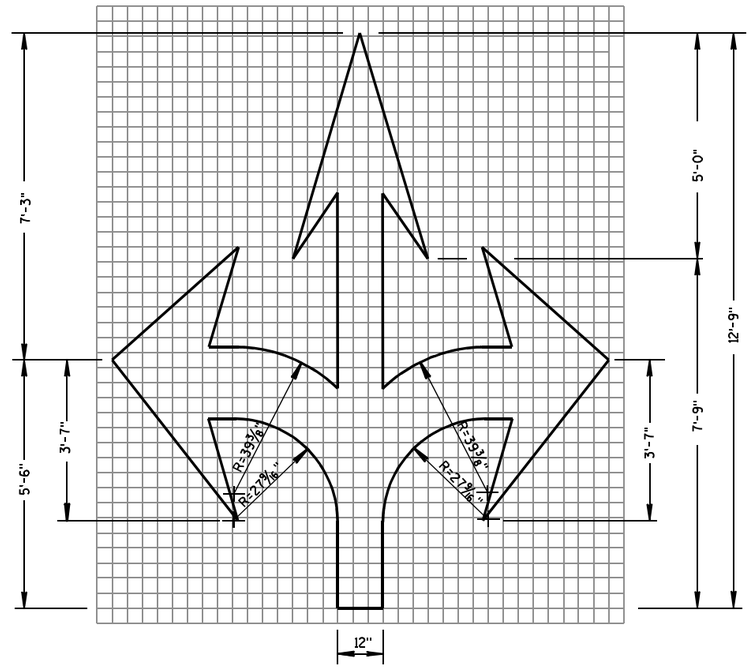

TYPE 6

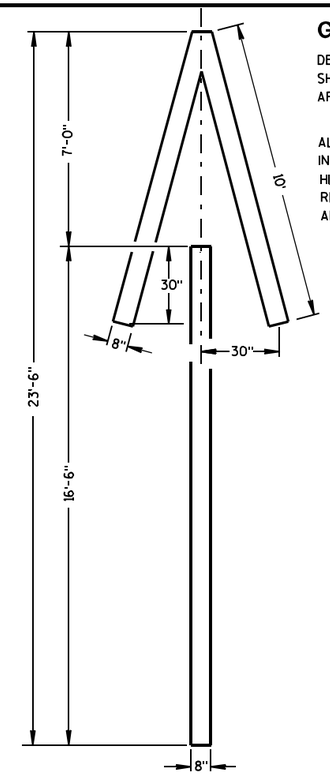

TYPE 4

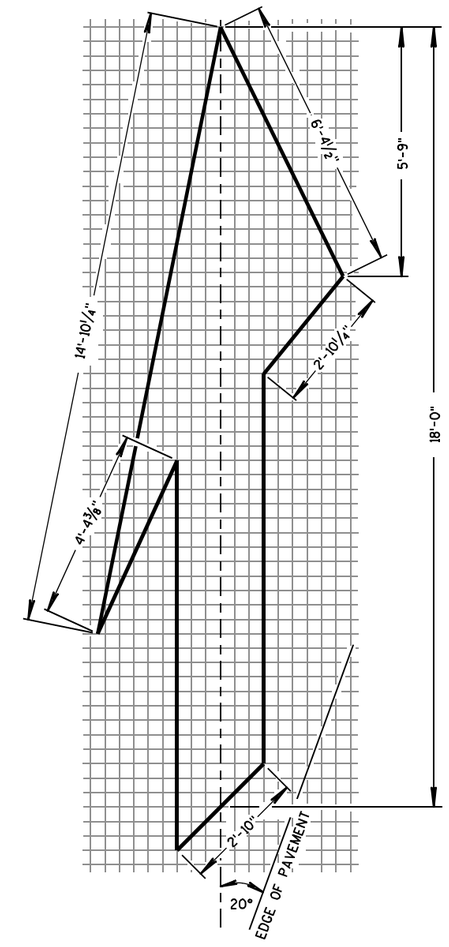

TYPE 5 LANE DROP ARROW

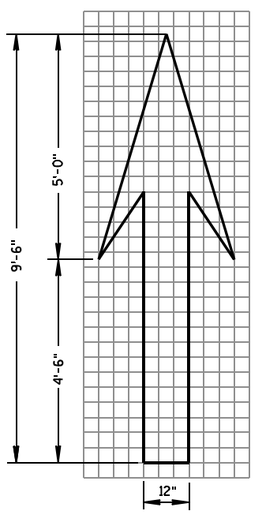

TYPE 1

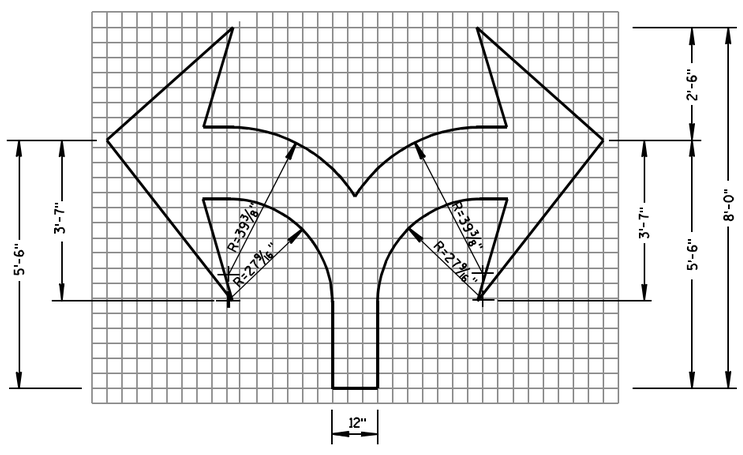

TYPE 7

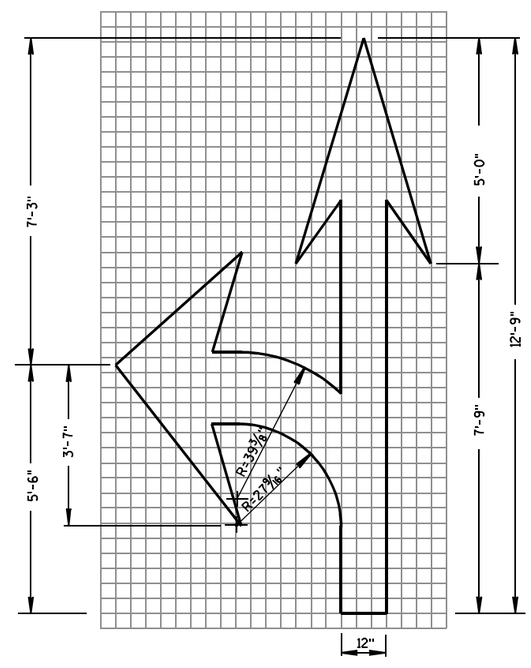

TYPE 3

PAVEMENT MARKING ARROWS

STATE OF WISCONSIN
DEPARTMENT OF TRANSPORTATION

APPROVED

7/1/11	/S/ Thomas N. Nothohm
DATE	STATE TRAFFIC ENGINEER

FHWA

6

S.D.D. 15 C 7-12c

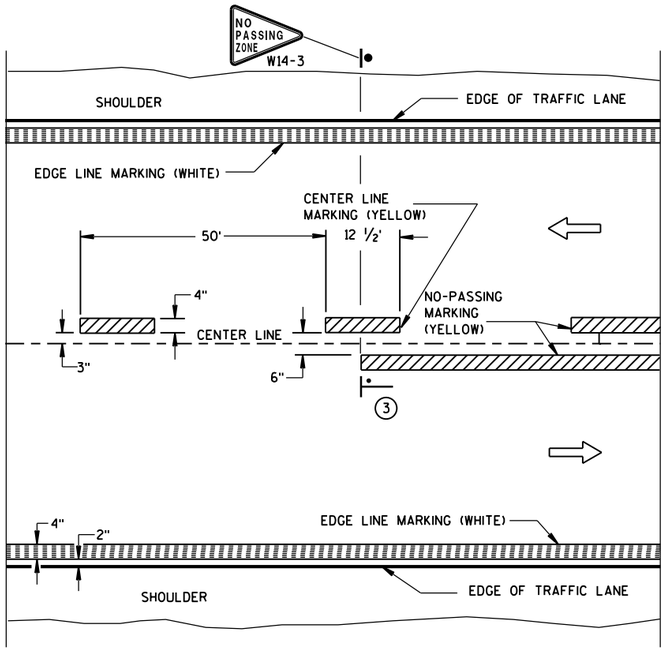

TWO WAY TRAFFIC

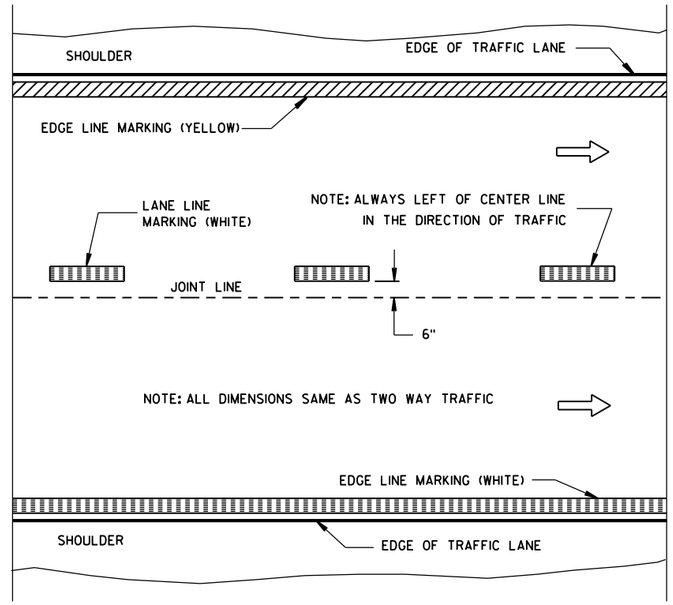

ONE WAY TRAFFIC

PERMANENT PAVEMENT MARKING

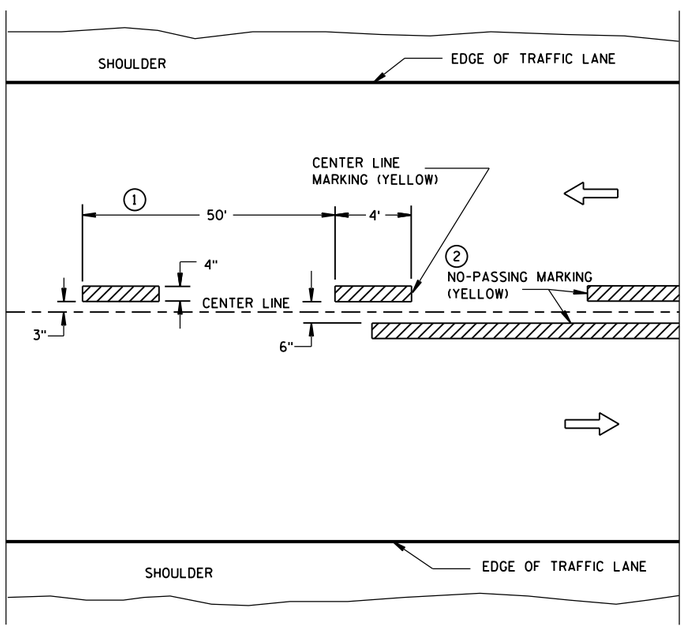

TWO WAY TRAFFIC

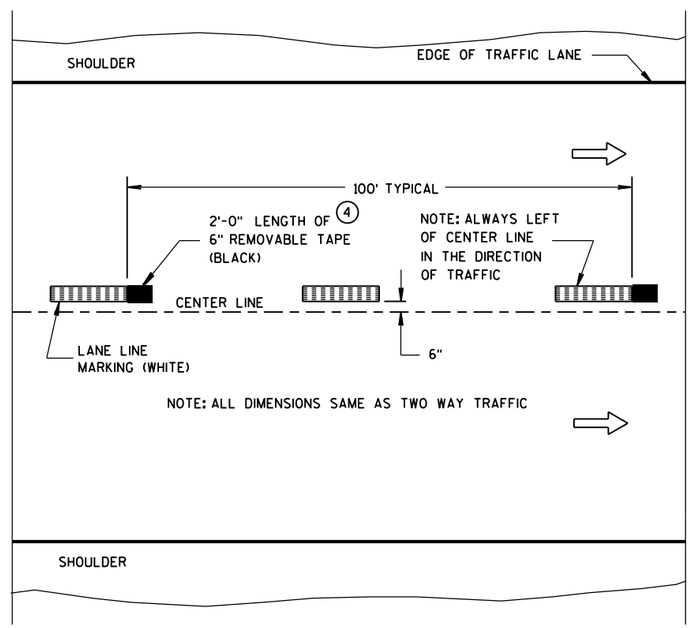

ONE WAY TRAFFIC

TEMPORARY (INTERMEDIATE) PAVEMENT MARKING

(SHOWS CYCLE FOR TEMPORARY CENTER LINE OR TEMPORARY LANE LINE MARKING)

GENERAL NOTES

DETAILS OF CONSTRUCTION NOT SHOWN ON THIS DRAWING SHALL CONFORM TO STANDARD SPECIFICATIONS AND SPECIAL PROVISIONS.

1. HALF CYCLE LENGTHS (25'±) WITH 2' MINIMUM STRIPE LENGTHS SHALL BE PROVIDED ON ROADWAYS (INCLUDING TEMPORARY TRAVELED WAYS) WITH REVERSE CURVATURE, CURVATURE OF OVER 5 DEGREES OR WHEN DIRECTED BY THE ENGINEER TO MARK UNUSUAL ALIGNMENT OF THE TRAVELED WAY.
2. NO PASSING ZONE TEMPORARY PAVEMENT MARKING IS REQUIRED TO BE PLACED, WHERE APPROPRIATE, ALONG WITH CENTERLINE TEMPORARY PAVEMENT MARKING WHEN A SAME DAY PERMANENT PAVEMENT MARKING ITEM IS INCLUDED IN THE CONTRACT.
3. NO PASSING ZONE MARKINGS ARE PLACED ACCORDING TO "T" MARKINGS. IF EXISTING NO PASSING ZONE W14-3 SIGNS ARE BEYOND 50 FEET IN EITHER DIRECTION, THE SIGNS SHALL BE MOVED TO THE "T" MARKINGS.
4. CONCRETE ONLY.

NOTE

ARROW SYMBOL (⇨) SHOWS DIRECTION OF TRAVEL

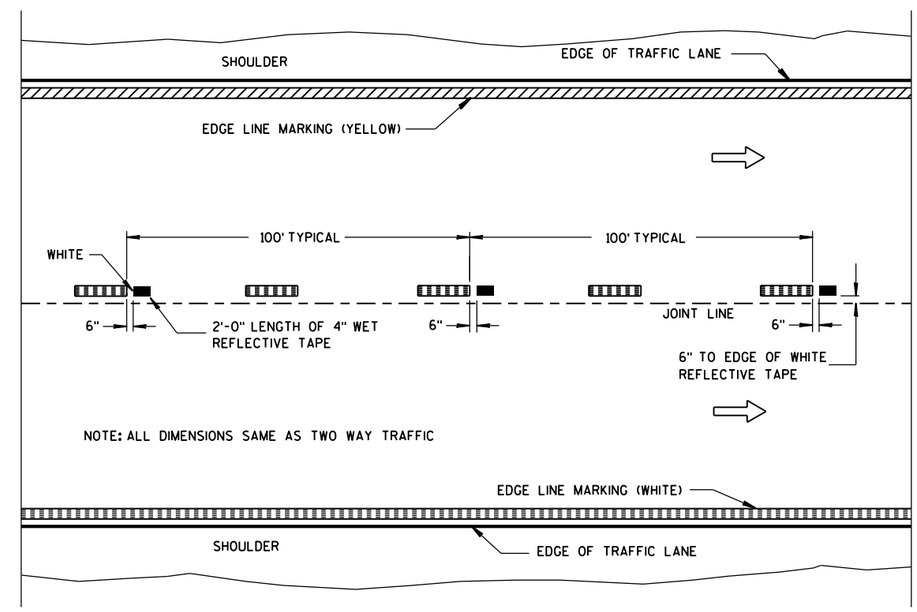

WET REFLECTIVE TAPE SUPPLEMENT TO SPRAYED OR NON WET REFLECTIVE TAPE LANE LINE

LEGEND

"T" MARKING

POST MOUNTED SIGN

PAVEMENT MARKING (MAINLINE)

STATE OF WISCONSIN
DEPARTMENT OF TRANSPORTATION

APPROVED
5-13-2013 /S/ Travis Feltes
DATE STATE TRAFFIC E
FHWA

6

S.D.D. 15 C 8-16a

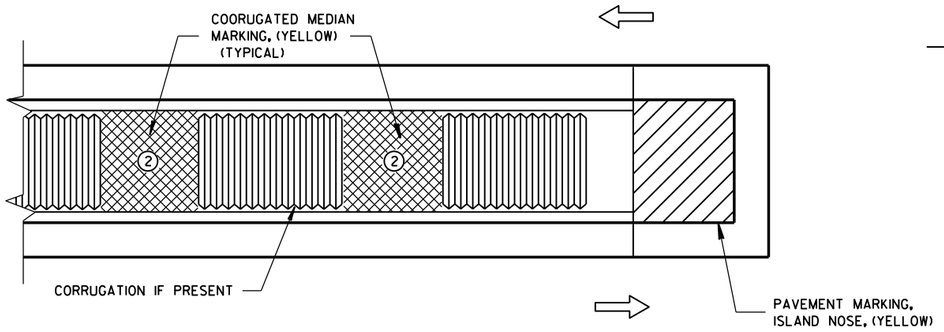

MEDIAN ISLAND WITH SQUARE BLUNT NOSE

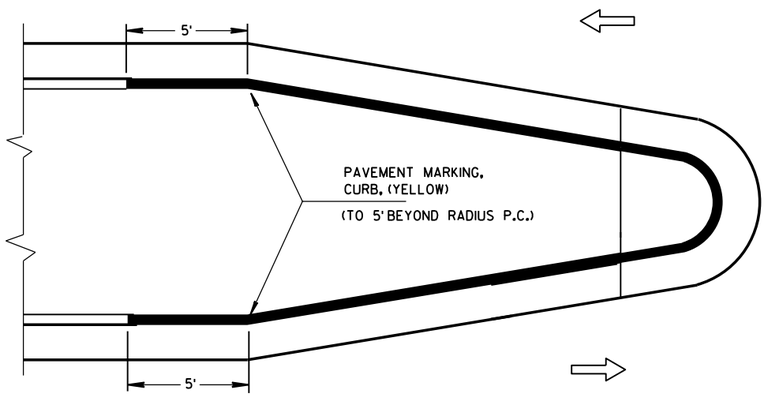

MEDIAN ISLAND WITH ROUND BLUNT NOSE

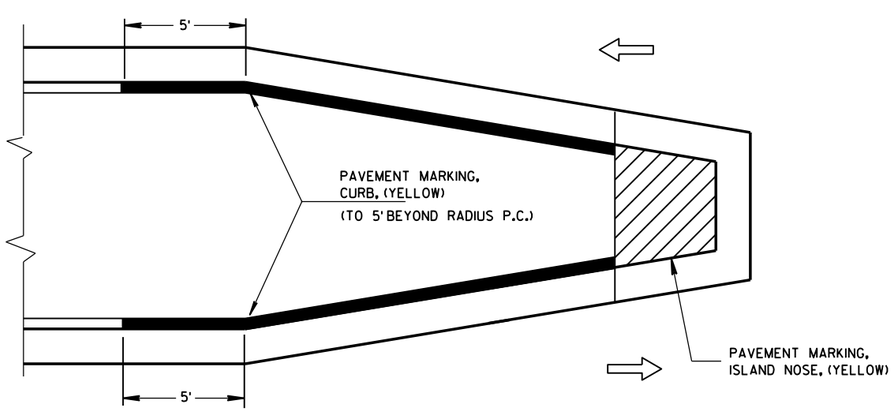

MEDIAN ISLAND WITH SLOPED NOSE

TYPICAL PLACEMENT OF PAVEMENT MARKING ON MEDIAN ISLANDS

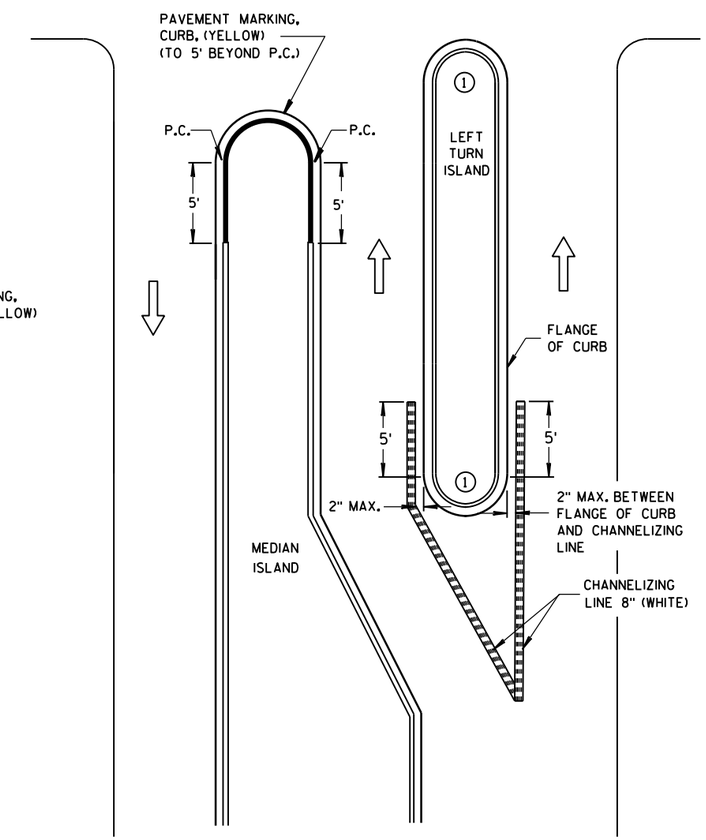

LEFT TURN & MEDIAN ISLAND

GENERAL NOTES

1. DO NOT MARK CURB NOSES THAT SEPARATE LANES OF TRAFFIC TRAVELING IN THE SAME DIRECTION.
2. WHEN CONCRETE CORRUGATED MEDIAN IS CONSTRUCTED TO SEPARATE TRAFFIC OPERATING IN THE OPPOSING DIRECTION YELLOW PAVEMENT MARKING SHALL BE APPLIED TO THE FLAT PORTION OF THE CONCRETE CORRUGATED MEDIAN. THE ITEM OF PAVEMENT MARKING, CONCRETE CORRUGATED MEDIAN, WILL BE MEASURED IN PLACE AND AND ACCEPTED IN ACCORDANCE WITH THE CONTRACT AND PAID FOR AT THE CONTRACT UNIT PRICE PER SQUARE FOOT.

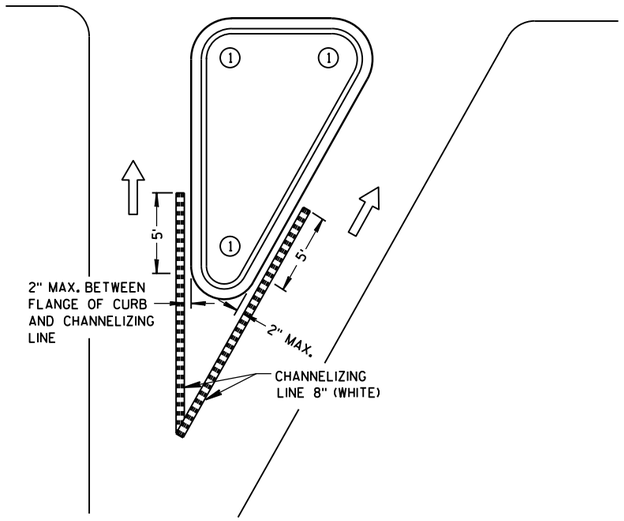

RIGHT TURN ISLAND

LEGEND

- ISLAND NOSE MARKING
- CURB MARKING
- CORRUGATED MEDIAN MARKING
- DIRECTION OF TRAVEL

PAVEMENT MARKING (ISLANDS)

STATE OF WISCONSIN
DEPARTMENT OF TRANSPOI

6

S.D.D. 15 C 8-16f

6

S.D.D. 15 C 8-16f

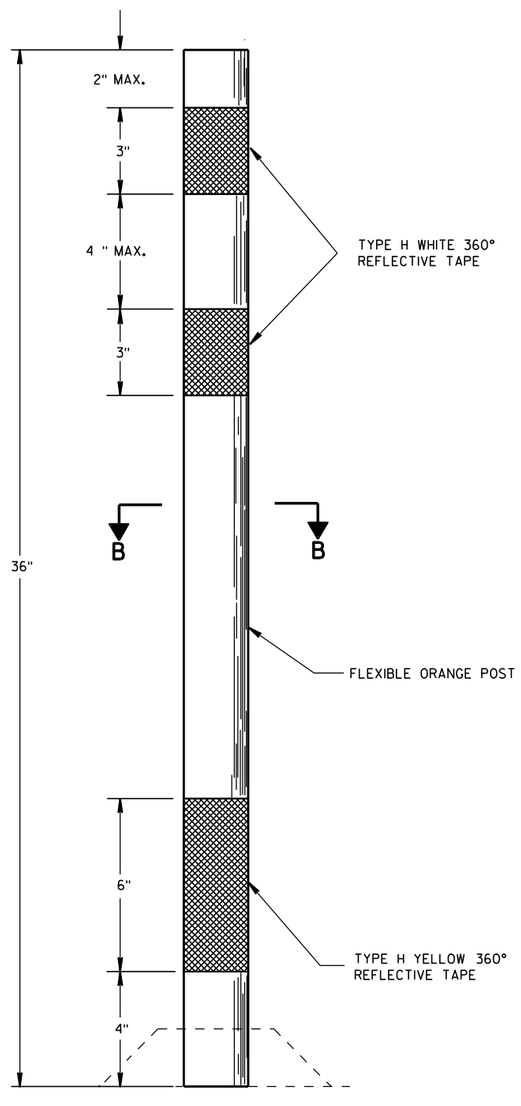

FLEXIBLE TUBULAR MARKER POST

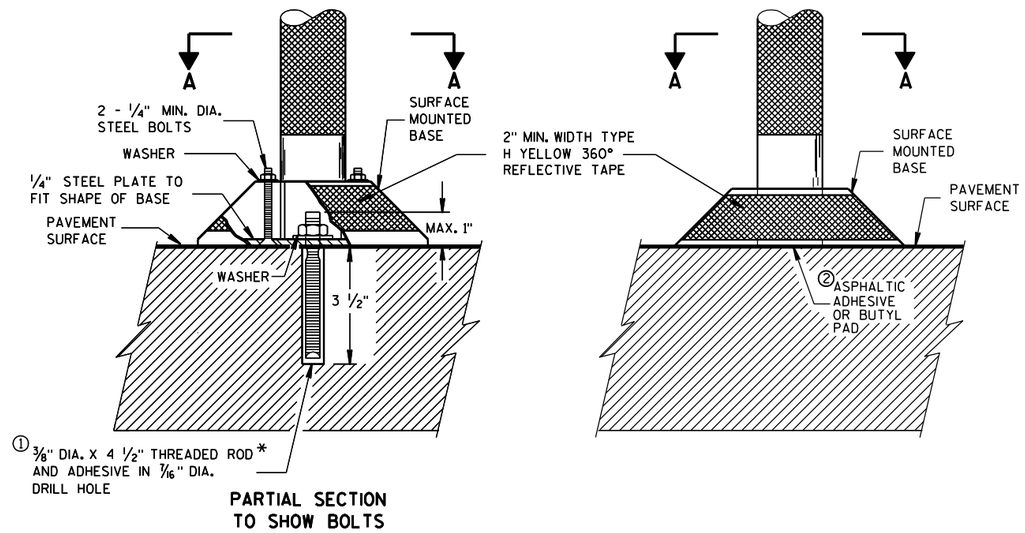

PARTIAL SECTION TO SHOW BOLTS

POST BASES ON NEW OR EXISTING PAVEMENT

GENERAL NOTES

DETAILS OF CONSTRUCTION NOT SHOWN ON THIS DRAWING SHALL CONFORM TO THE PERTINENT REQUIREMENTS OF THE STANDARD SPECIFICATIONS AND APPLICABLE SPECIAL PROVISIONS.

SURFACE MOUNTED BASES SHALL BE FURNISHED IN ACCORDANCE WITH MANUFACTURERS RECOMMENDATIONS TO BE COMPATIBLE WITH FLEXIBLE TUBULAR MARKER POSTS TO A SIZE AND SHAPE THAT WILL PROVIDE A STABLE POST FOUNDATION WHEN SECURED TO THE PAVEMENT.

① THREADED ROD SHALL BE MACHINED DOWN TO 0.280 INCH DIA. 1 1/4 INCHES FROM THE TOP.

② THE ASPHALTIC ADHESIVE OR BUTYL PAD FURNISHED SHALL BE IN ACCORDANCE WITH MANUFACTURERS RECOMMENDATIONS.

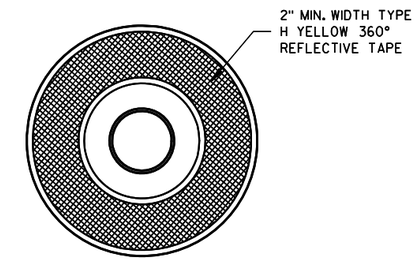

SECTION A-A

SURFACE MOUNTED BASE

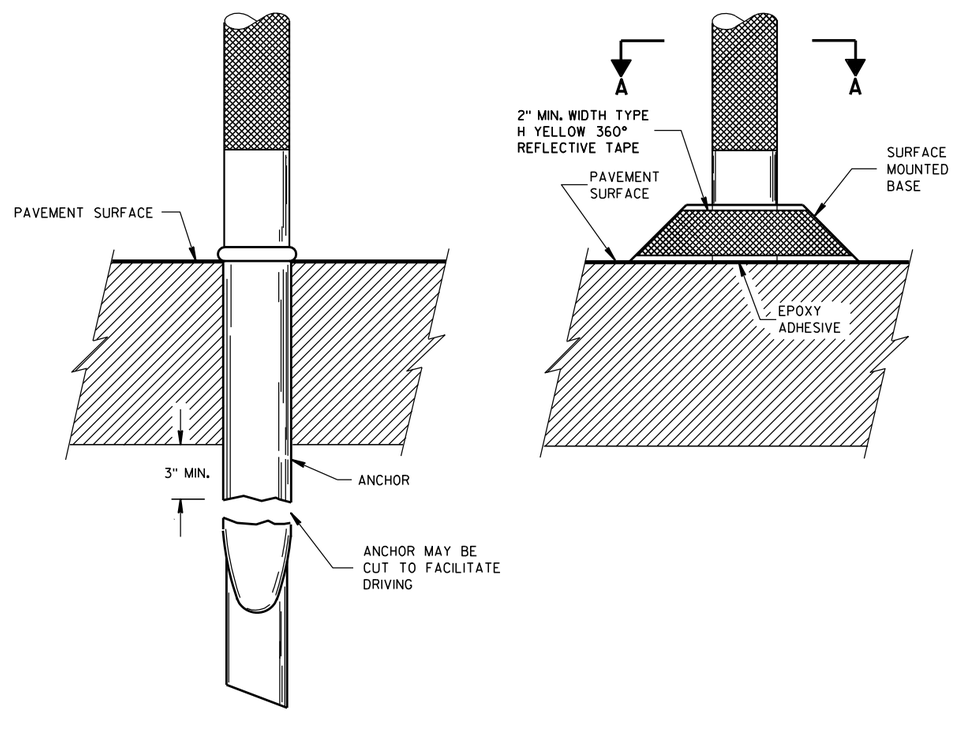

POST ANCHOR AND BASE ON PAVEMENT WHICH WILL BE REMOVED

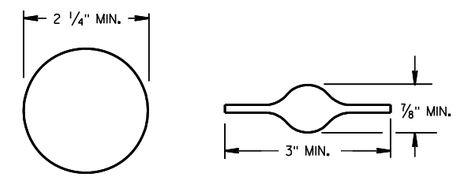

SECTION B-B

ALTERNATIVE SHAPES

FLEXIBLE TUBULAR MARKER POST, ANCHOR & BASES
STATE OF WISCONSIN DEPARTMENT OF TRANSPORTATION
APPROVED 2/17/94 DATE — /S/ Chester J. [illegible] DIRECTOR, OFFICE O[illegible] FHWA

6

6

S.D.D. 15 C 11-5

S.D.D. 15 C 11-5

TWO-LANE ROADWAY

SYMBOLS

WORK AREA

FLAGGER, EQUIPPED WITH STOP/SLOW PADDLE FASTENED ON SUPPORT STAFF

SIGN ON PORTABLE OR PERMANENT SUPPORT

USE OF THE "BE PREPARED TO STOP" SIGN IS OPTIONAL. WHEN USED, THIS SIGN SHALL BE LOCATED BETWEEN THE W20-7a AND W20-4 SIGNS. A 500' TYPICAL SPACING SHALL BE PROVIDED BETWEEN THE SIGNS.

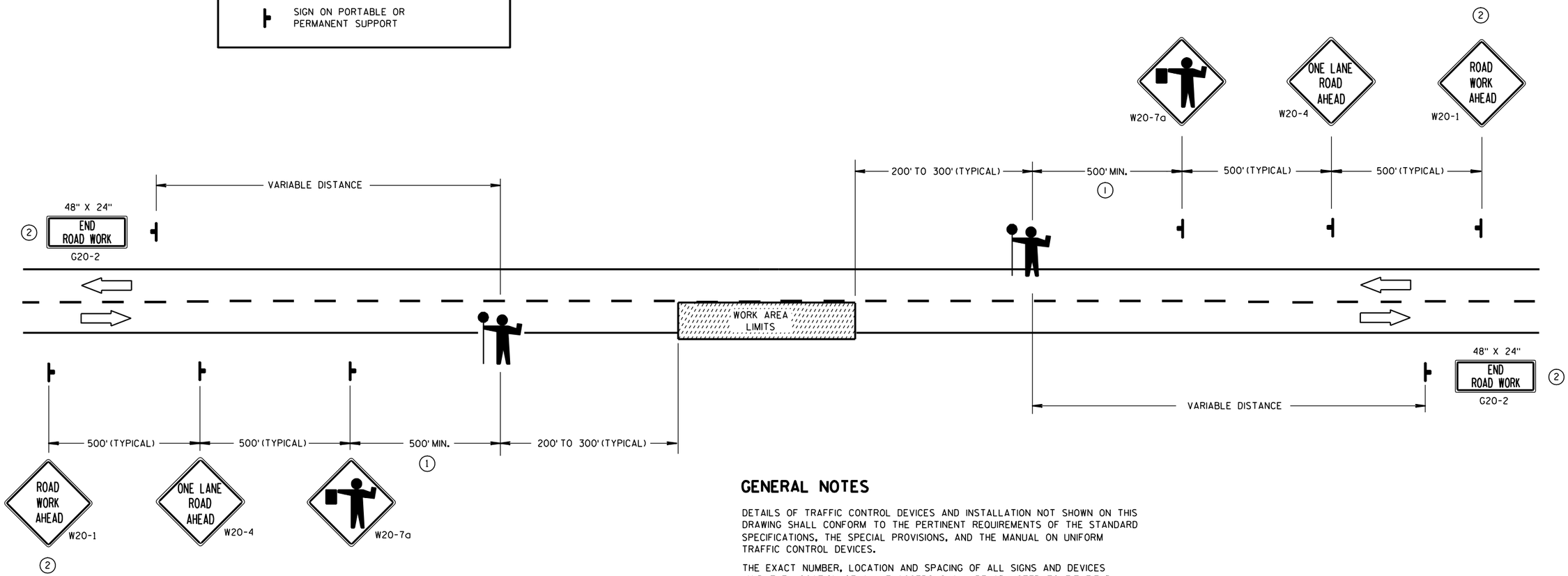

1. FOR A MOVING WORK OPERATION, SIGNING FOR BOTH DIRECTIONS SHALL BE REESTABLISHED (AS SIMULTANEOUSLY AS PRACTICAL) AT APPROXIMATELY 3500 FOOT INTERVALS IN THE MOVING WORK OPERATION OR AS APPROVED BY THE ENGINEER.

2. SIGN NOT REQUIRED IF FLAGGING OPERATION OCCURS WITHIN A SIGNED ROAD WORK ZONE AREA.

GENERAL NOTES

DETAILS OF TRAFFIC CONTROL DEVICES AND INSTALLATION NOT SHOWN ON THIS DRAWING SHALL CONFORM TO THE PERTINENT REQUIREMENTS OF THE STANDARD SPECIFICATIONS, THE SPECIAL PROVISIONS, AND THE MANUAL ON UNIFORM TRAFFIC CONTROL DEVICES.

THE EXACT NUMBER, LOCATION AND SPACING OF ALL SIGNS AND DEVICES (AND THE LOCATION OF ALL FLAGGERS) SHALL BE ADJUSTED TO FIT FIELD CONDITIONS AS APPROVED BY THE ENGINEER.

THE FIRST ADVANCE WARNING SIGN SHOULD TYPICALLY BE LOCATED IN ADVANCE OF THE ANTICIPATED TRAFFIC BACKUP OR QUEUE.

WHEN A SIDE ROAD OR RAMP INTERSECTS THE FACILITY ON WHICH THE WORK IS BEING PERFORMED, ADDITIONAL TRAFFIC CONTROLS SHALL BE PROVIDED AS SPECIFIED IN THE PLANS AND/OR THE SPECIAL PROVISIONS OR AS APPROVED BY THE ENGINEER.

FLAGGERS SHALL BE IN SIGHT OF EACH OTHER OR IN DIRECT COMMUNICATION AT ALL TIMES. THEY SHALL BE EQUIPPED WITH STOP/SLOW PADDLES FASTENED ON SUPPORT STAFFS. WHEN THE FLAGGING OPERATION IS NOT IN EFFECT, THE "FLAGGER AHEAD", THE "ROAD WORK AHEAD" AND THE ONE LANE ROAD AHEAD" SIGNS SHALL BE COVERED OR REMOVED AND THE HIGHWAY RESTORED TO NORMAL OPERATION.

ALL SIGNS ARE 48" X 48" UNLESS OTHERWISE NOTED.

TRAFFIC CONTROL FOR LANE CLOSURE (SUITABLE FOR MOVING OPERATIONS)

STATE OF WISCONSIN
DEPARTMENT OF TRANSPORTATION

APPROVED
9/5/06 — DATE
/S/ Thomas N. Nothohm — STATE TRAFFIC ENGINEER
FHWA

6

S.D.D. 15 C 12-3

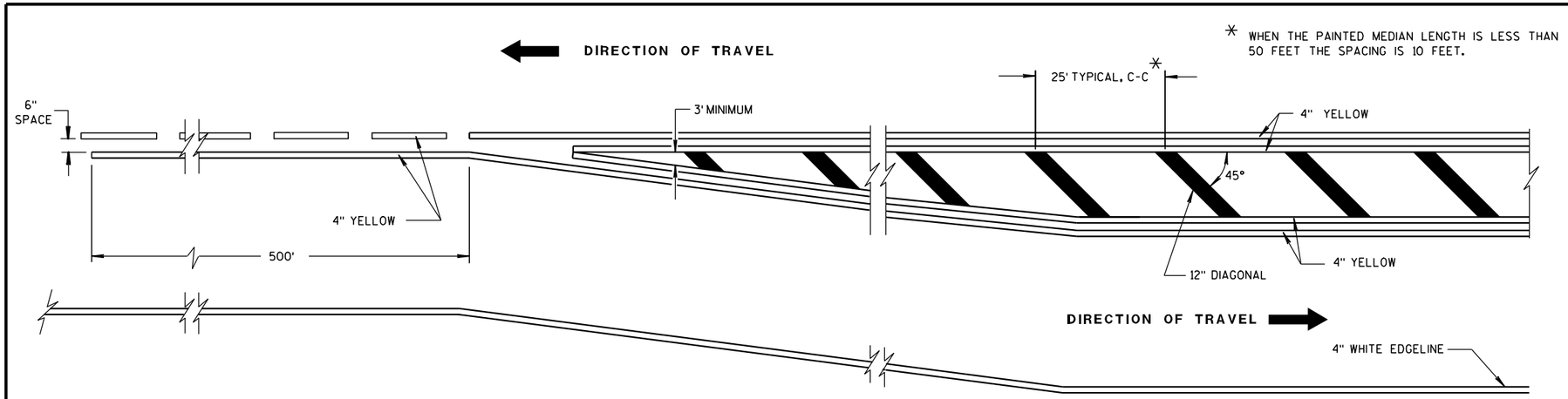

MEDIAN ISLAND DETAIL

GENERAL NOTE

DIAGONALS ARE OPTIONAL WHEN PAINTED ISLAND IS LESS THAN 6 FEET AT WIDEST POINT.

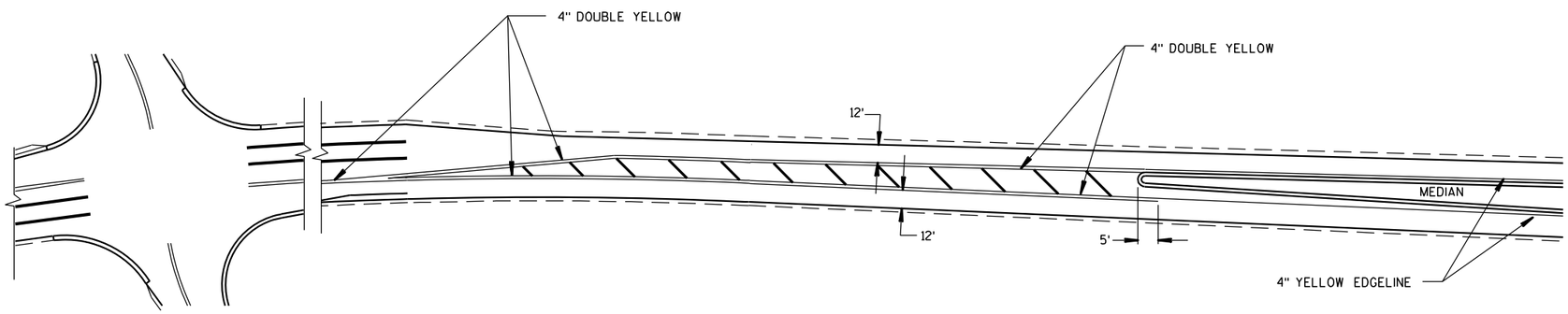

APPROACH MARKINGS FOR OTHER MEDIAN TYPES

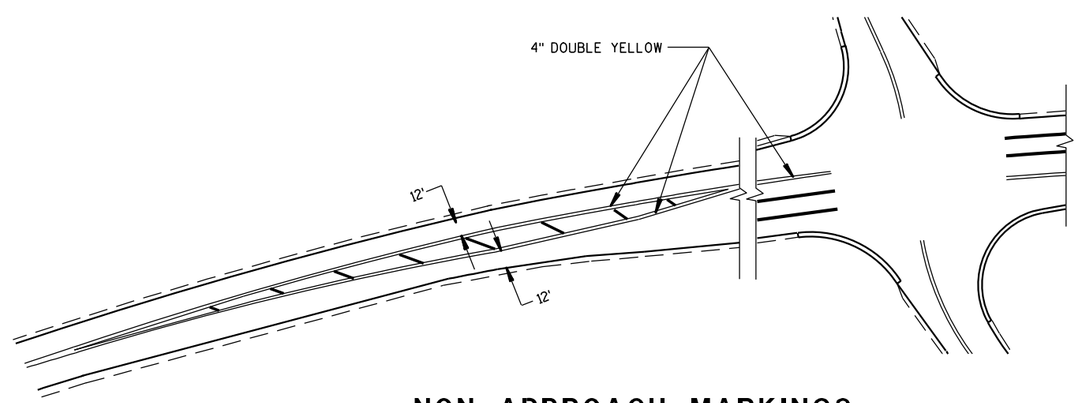

NON APPROACH MARKINGS

6

6

S.D.D. 15 C 18-3

S.D.D. 15 C 18-3

MEDIAN ISLAND MARKING

STATE OF WISCONSIN
DEPARTMENT OF TRANSPORTATION

APPROVED

2-5-09	/S/ Thomas N. Nothohm
DATE	STATE TRAFFIC ENGINEER

FHWA

IGN

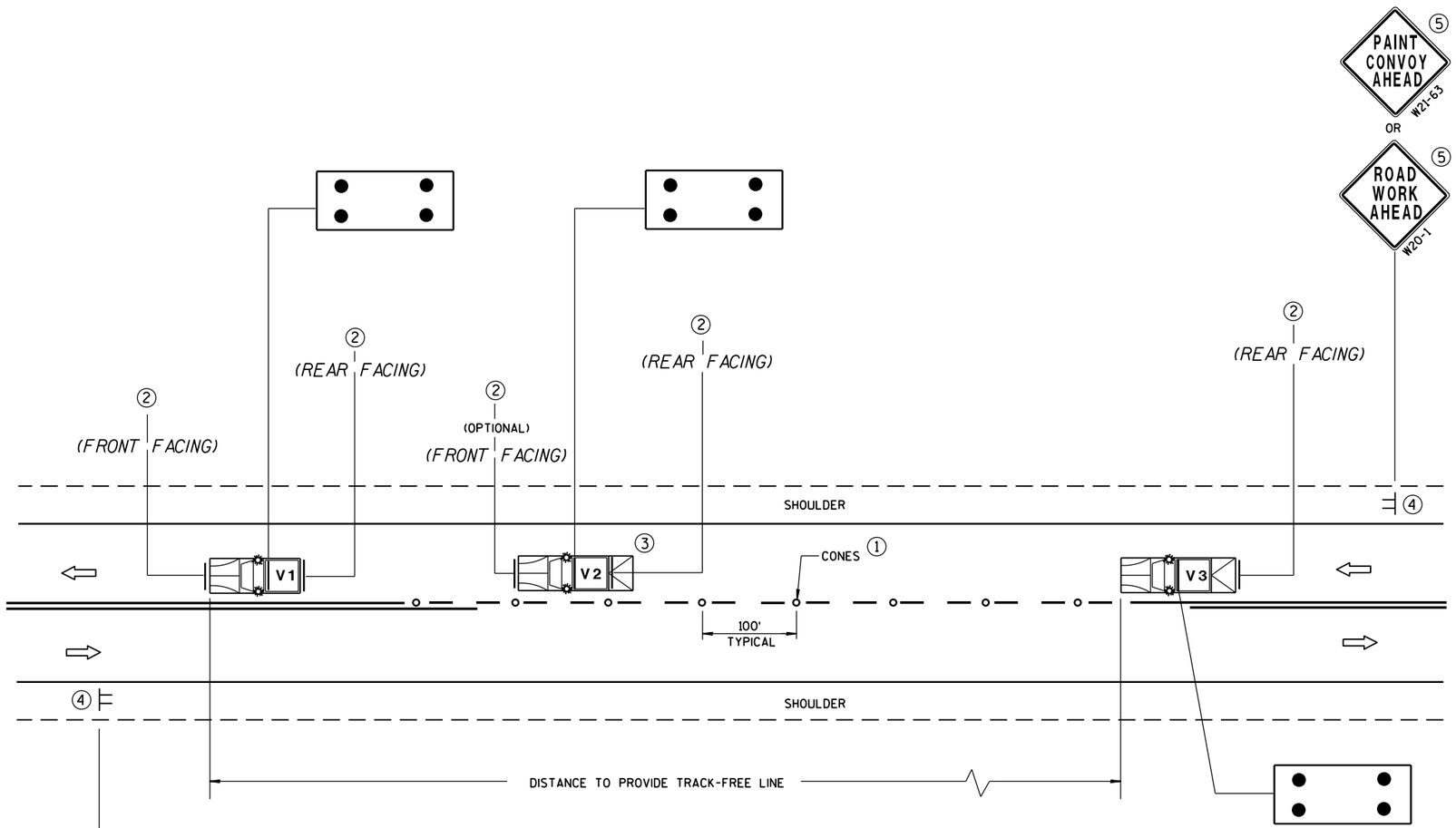

MOVING PAVEMENT MARKING OPERATIONS
TWO-LANE TWO-WAY ROADWAY

GENERAL NOTES

ALL VEHICLES SHALL BE EQUIPPED WITH TWO 360 DEGREE HIGH INTENSITY YELLOW FLASHING LIGHTS OR STROBE LIGHTS AND OPERATED WITH HEADLIGHTS TURNED ON.

VEHICLES SHALL BE EQUIPPED WITH REAR FACING TYPE B OR C FLASHING ARROW PANEL OPERATING IN CAUTION MODE. SIGNS PLACED ON VEHICLES MUST NOT OBSCURE THE ARROW PANEL.

ALL SIGNS ARE 48" X 48" UNLESS OTHERWISE SPECIFIED.

IF SPEED LIMIT IS 40 MPH OR LESS STATIONARY SIGNS MAY BE OMITTED IF CONES ARE USED.

ALTERNATE SIGN MESSAGES, SUCH AS "PAINT CREW AHEAD" OR "ROAD PAINTING AHEAD" MAY BE USED.

DISTANCE BETWEEN VEHICLES MAY VARY ACCORDING TO TERRAIN, SIGHT DISTANCE, PAINT DRYING TIME, AND OTHER FACTORS. WHENEVER ADEQUATE STOPPING SIGHT DISTANCE EXISTS TO THE REAR, SHADOW VEHICLES SHOULD MAINTAIN THE MINIMUM DISTANCE FROM THE WORK VEHICLE AND PROCEED AT THE SAME SPEED AS THE WORK VEHICLE. SHADOW VEHICLES SHOULD SLOW DOWN IN ADVANCE OF VERTICAL OR HORIZONTAL CURVES THAT RESTRICT SIGHT DISTANCE.

THE WORK AND SHADOW VEHICLES SHOULD PULL OVER PERIODICALLY TO ALLOW TRAFFIC TO PASS.

THIS DRAWING SHALL BE USED FOR CENTERLINE OR EDGELINE MARKING.

WHEN NO WORK ACTIVITY IS TAKING PLACE, REMOVE OR TURN THE STATIONARY WARNING SIGNS AWAY FROM TRAFFIC.

1. CONES MAY BE OMITTED ON PAINTED LINE IF APPROVED BY THE ENGINEER. CONSIDER PAVEMENT MARKING DRY OR CURE TIMES AND TRAFFIC VOLUME.
2. USE STANDARD SIGN W21-64 WITH APPROPRIATE ARROW.

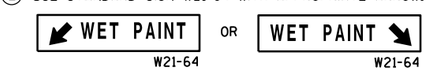

3. OPTIONAL TRUCK-MOUNTED ATTENUATOR.
4. SIGNS SHALL BE REPEATED APPROXIMATELY EVERY THREE MILES.
5. IF CONSTRUCTION WORK ZONE SIGNS ARE IN PLACE, W20-1 OR W21-63 ARE NOT REQUIRED.

LEGEND

V1	LEAD VEHICLE
V2	SHADOW VEHICLE
V3	TRAIL VEHICLE WITH TMA
TMA	TRUCK-MOUNTED ATTENUATOR
	SIGN ON TEMPORARY SUPPORT
	DIRECTION OF TRAFFIC
	CONES
	FLASHING ARROW PANEL (CAUTION)

MOVING PAVEMENT MARKING OPERATION
TWO-LANE TWO-WAY ROADWAY

STATE OF WISCONSIN
DEPARTMENT OF TRANSPORTATION

APPROVED
5/3/2013 — DATE
/S/ Travis Feltes — STATE TRAFFIC E
FHWA

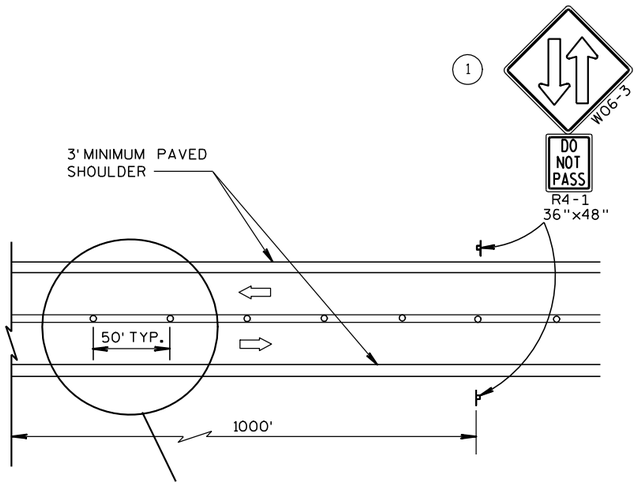

TWO LANE, TWO WAY OPERATION

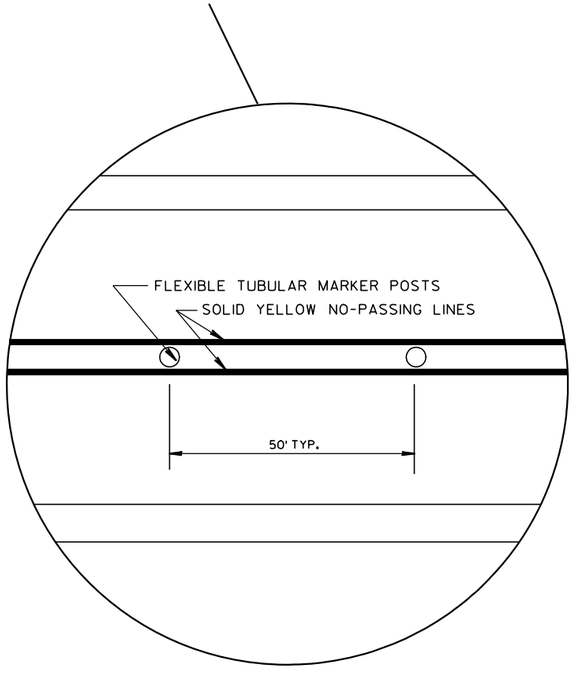

LEGEND

- POST WITH ATTACHED SIGN
- FLEXIBLE TUBULAR MARKER AND BASE
- DIRECTION OF TRAFFIC

GENERAL NOTES :

ALL SIGNS ARE 48"x48" UNLESS OTHERS NOTED.

"WO" IS THE SAME AS "W" EXCEPT THE BACKGROUND IS ORANGE.

ANY SIGNS TEMPORARY OR EXISTING, WHICH CONFLICT WITH THE TRAFFIC CONTROL "IN USE" SHALL BE REMOVED OR COVERED AS NEEDED AND AS APPROVED BY THE ENGINEER. NO WARNING LIGHTS SHALL BE WORKING ON "COVERED" OR "DOWNED" SIGNS.

THE EXACT NUMBER, LOCATION, AND SPACING OF ALL SIGNS AND DEVICES SHALL BE ADJUSTED TO FIT FIELD CONDITIONS AS APPROVED BY THE ENGINEER.

THE SPACING BETWEEN SIGNS SHOULD BE ADJUSTED TO NOT CONFLICT WITH AND TO PROVIDE A MINIMUM OF 200 FEET, (500 FEET DESIRABLE) DISTANCE TO EXISTING SIGNS.

A SINGLE ROW OF FLEXIBLE TUBULAR MARKERS ON CENTERLINE EXTEND FOR THE ENTIRE LENGTH OF TWO-WAY TRAFFIC @ 50' SPACING.

COVER EXISTING CENTERLINE STRIPE WITH TEMPORARY PAVEMENT MARKING, 4-INCH DOUBLE YELLOW.

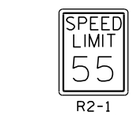

R2-1
48"x60"
(BLACK AND WHITE)

IF THE REGULATORY SPEED HAS BEEN REDUCED, A SPEED LIMIT SIGN SHALL BE LOCATED 1500 FEET BEYOND THE END OF THE ACCELERATION LANE OF EACH ENTRANCE RAMP. THERE SHOULD **BE A SPEED LIMIT SIGN INCORPORATED A MINIMUM OF EVERY** 2 OR 3 MILES.

W057-51
48"x24"

R4-1
36"x48"

THE W06-3 WITH THE W057-51 SHALL BE LOCATED 200' BEYOND THE END OF THE ACCELERATION LANE OF EACH ENTRANCE RAMP AND/OR 500' BEYOND ANY SIDEROAD. THE W06-3 WITH THE R4-1 SHALL BE LOCATED 1000' BEYOND THE W06-3 AND THE W057-51 AND THE SIGNS SHALL BE ALTERNATED WITH ONE MILE INTERVALS BETWEEN W06-3 SIGNS.

TRAFFIC CONTROL, TWO LANE TWO WAY OPERATION

STATE OF WISCONSIN
DEPARTMENT OF TRANSPORTATION

APPROVED
12-4-95 — DATE
/S/ Chester J. [illegible] — DIRECTOR, OFFICE OF [illegible]
FHWA

GENERAL NOTES

THE EXACT NUMBER, LOCATION AND SPACING OF ALL SIGNS AND DEVICES SHALL BE ADJUSTED TO FIT FIELD CONDITIONS AS APPROVED BY THE ENGINEER.

ALL SIGNS ARE 48" X 48" UNLESS OTHERWISE NOTED. IF NECESSARY DUE TO SPACE CONSTRAINTS IN URBAN AREAS, 36" X 36" SIGNS MAY BE USED IF APPROVED BY DISTRICT TRAFFIC UNIT.

"WO" SIGNS ARE THE SAME AS "W" SIGNS EXCEPT THE BACKGROUND IS ORANGE.

SIGNS THAT WILL BE IN PLACE LESS THAN 7 CONTINUOUS DAYS AND NIGHTS MAY BE MOUNTED ON PORTABLE SUPPORTS.

ANY SIGNS TEMPORARY OR EXISTING, WHICH CONFLICT WITH TRAFFIC CONTROL "IN USE" SHALL BE REMOVED OR COVERED AS NEEDED AND AS APPROVED BY THE ENGINEER.

W20-1 AND G20-2A SIGNS ARE NOT REQUIRED IF THE WORK AREA IS WITHIN A LARGER WORK ZONE WHERE THESE SIGNS ARE ALREADY PRESENT. G20-2A SIGNS MAY ALSO BE OMITTED IF DURATION OF WORK IS LESS THAN 7 CONTINUOUS DAYS AND NIGHTS.

CHANNELIZING DEVICES PLACED ADJACENT TO THE WORK AREA SHALL BE PULLED BACK FROM THE TRAVEL LANE WHEN WORK IS NOT IN PROGRESS.

TABLE A

S \ W	SHOULDER TAPER LENGTH (FEET) 4	6	8	10	BUFFER SPACE (FEET)
30	20	30	40	50	85
35	30	45	55	70	120
40	40	55	75	90	170
45	60	90	120	150	220
50	70	100	135	170	280
55	75	110	150	185	335

W = SHOULDER WIDTH (FEET)
S = NON-CONSTRUCTION SPEED LIMIT (MPH)

SHOULDER TAPER LENGTH

$= \frac{WS}{3}$ AT 45 MPH OR GREATER

$= \frac{WS^2}{180}$ AT 40 MPH OR LESS

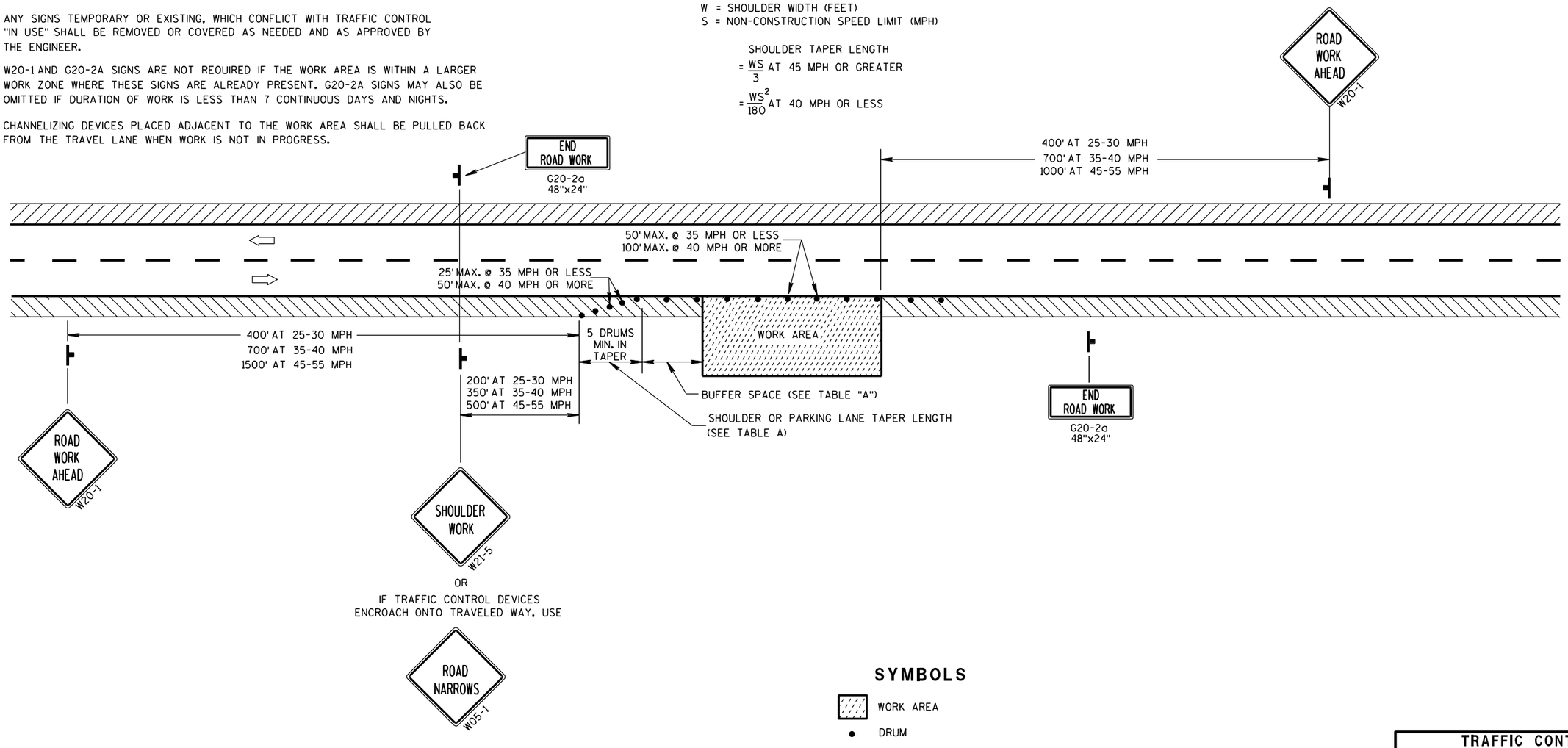

SYMBOLS

- WORK AREA
- DRUM
- POST MOUNTED SIGN
- DIRECTION OF TRAFFIC FLOW

TRAFFIC CONTROL, WORK ON SHOULDER OR PARKING LANE, UNDIVIDED ROADWAY

STATE OF WISCONSIN
DEPARTMENT OF TRANSPORTATION

APPROVED
5/23/00 — DATE
/S/ Chester J. [illegible] — CHIEF SIGNS AND MARK[illegible] [illegible]NNEER
FHWA

6

S.D.D. 15 D 28-1

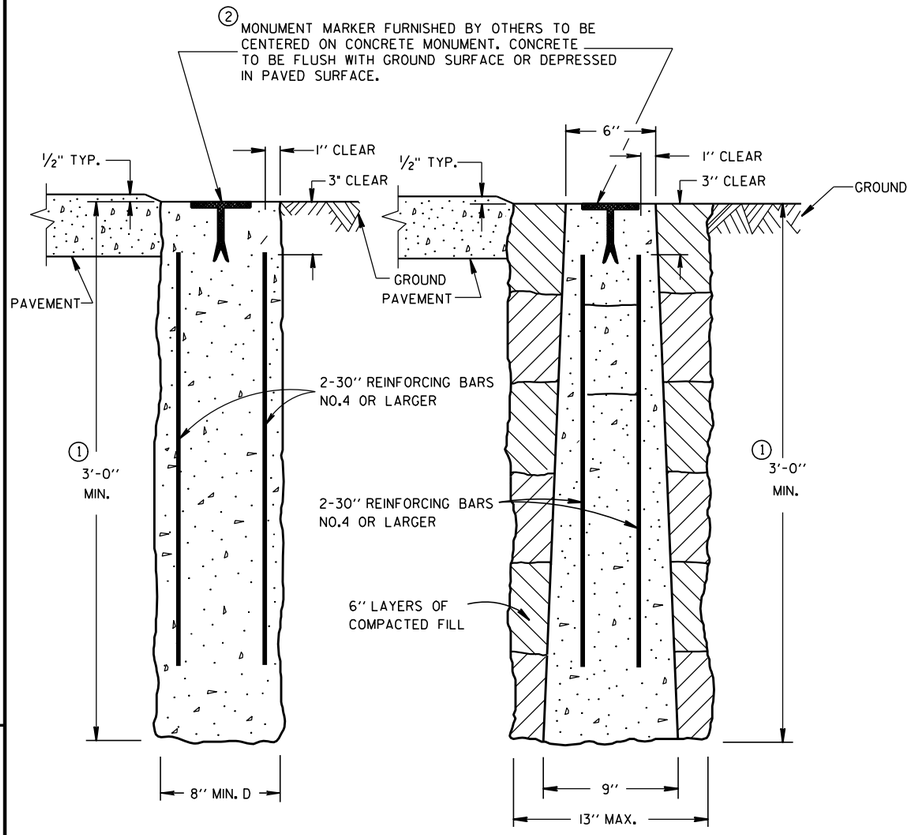

CAST-IN-PLACE PRECAST

CONCRETE MONUMENTS

TYPE A

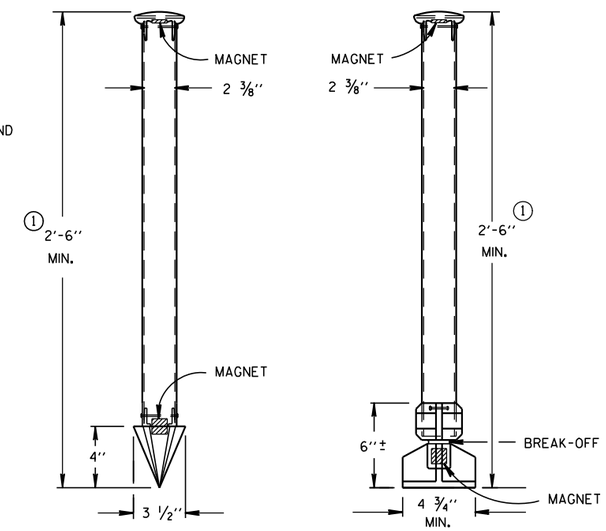

TYPE C TYPE D

DRIVE-IN MONUMENT BREAK-OFF MONUMENT

ALUMINUM MONUMENTS

(INCLUDES MARKER)

GENERAL NOTES

DETAILS OF CONSTRUCTION, MATERIALS AND WORKMANSHIP NOT SHOWN ON THIS DRAWING SHALL CONFORM TO THE PERTINENT REQUIREMENTS OF THE STANDARD SPECIFICATIONS AND THE APPLICABLE SPECIAL PROVISIONS.

DETAILED DRAWINGS OF PROPOSED ALTERNATE DESIGNS FOR METAL MONUMENTS OR MONUMENT COVERS SHALL BE SUBMITTED TO THE ENGINEER FOR APPROVAL.

INSTALLED METAL MONUMENTS MUST BE EASILY DETECTED WITH A DIP NEEDLE. INSERT PERMANENT MAGNETS SHALL BE ATTACHED NEAR THE TOP AND BOTTOM OF THOSE MONUMENTS CONSTRUCTED OF A METAL ALLOY WHICH IS NOT ATTRACTIVE TO A DIP NEEDLE.

THE CAST IRON MONUMENT COVER SHALL BE A "NON-ROCKING" TYPE. ADJUSTMENT OF THE COVER TO GRADE MAY BE ACCOMPLISHED BY THE USE OF MORTAR AND BRICK, OR BY EITHER PRECAST OR CAST-IN-PLACE REINFORCED CONCRETE GRADE RINGS.

MONUMENTS SHALL BE LOCATED AND PLACED AT THE DIRECTION OF THE ENGINEER.

ALUMINUM MONUMENTS AND MONUMENT COVERS SHALL BE MADE FROM AN ALUMINUM AND MAGNESIUM ALLOY AS DETERMINED BY THE MANUFACTURER.

THE MONUMENT COVERS DETAILED ON THIS DRAWING ARE NOT EQUAL ALTERNATES. MONUMENT COVERS SHALL BE CAST IRON UNLESS ALUMINUM IS SPECIFIED ELSEWHERE IN THE CONTRACT.

MONUMENT SHALL BE CAST-IN-PLACE CONCRETE UNLESS PRECAST CONCRETE OR ALUMINUM MONUMENTS ARE SPECIFIED IN THE CONTRACT OR PERMITTED BY THE ENGINEER.

① MINIMUM LENGTH SHALL BE 4'-0" FOR MONUMENTS INSTALLED IN PAVED AREAS.

② AN OFFICIAL COUNTY MONUMENT MARKER SUPPLIED BY A COUNTY MAY BE REQUIRED FOR SOME SECTION CORNERS AND WITNESS MONUMENTS INSTEAD OF THIS WIS DOT MARKER.

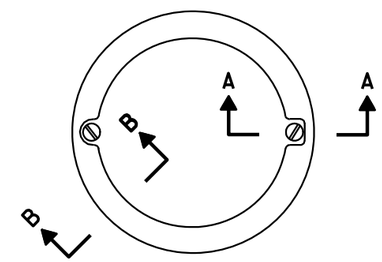

TOP VIEW

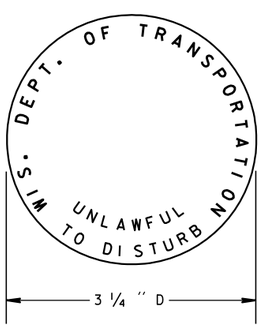

② WIS DOT MONUMENT MARKER LOGO

FOR TYPES "A", "C" & "D"

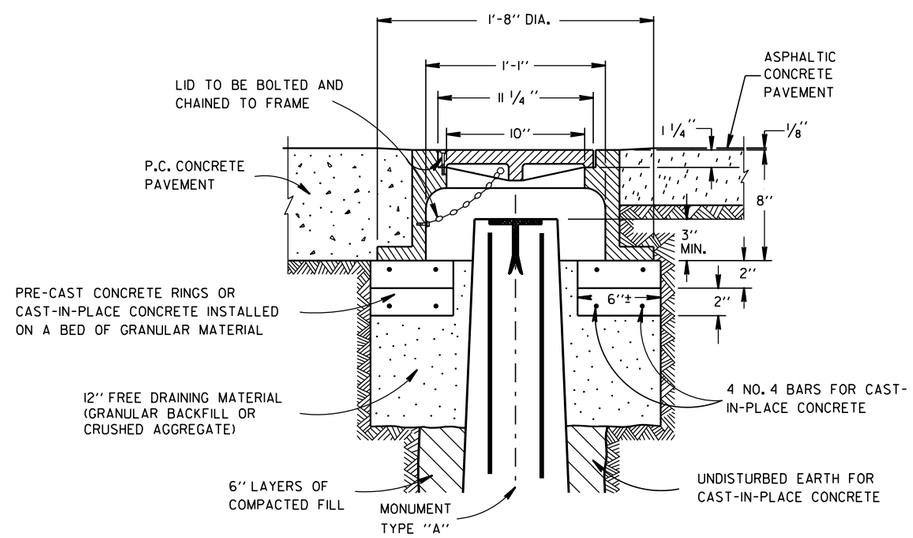

CAST IRON MONUMENT COVER

(APPROXIMATE WEIGHT - 95 LBS.)

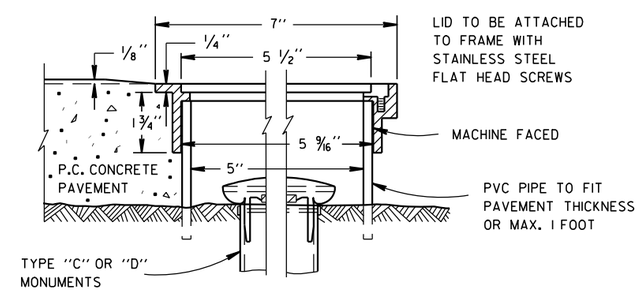

SECTION B-B SECTION A-A

ALUMINUM MONUMENT COVER

(APPROXIMATE WEIGHT 2 LBS)

(FOR CONCRETE PAVEMENT ONLY)

LANDMARK REFERENCE MOUNMENTS AND COVERS

STATE OF WISCONSIN
DEPARTMENT OF TRANSPORTATION

APPROVED

9/22/1999 /S/ Rory L. Rhinesmith

DATE CHIEF ROADWAY DEVELOPMENT ENGINEER

FHWA

NOTES

1. All Signs Type II - Type H Reflective - reference WIS DOT Standard Specification for HIGHWAY and STRUCTURE CONSTRUCTION latest edition.
2. Color:
   Background - GREEN
   Message - WHITE
3. Message Series - E except as Shown
4. See plate A11-12 for Roundabout Arrow

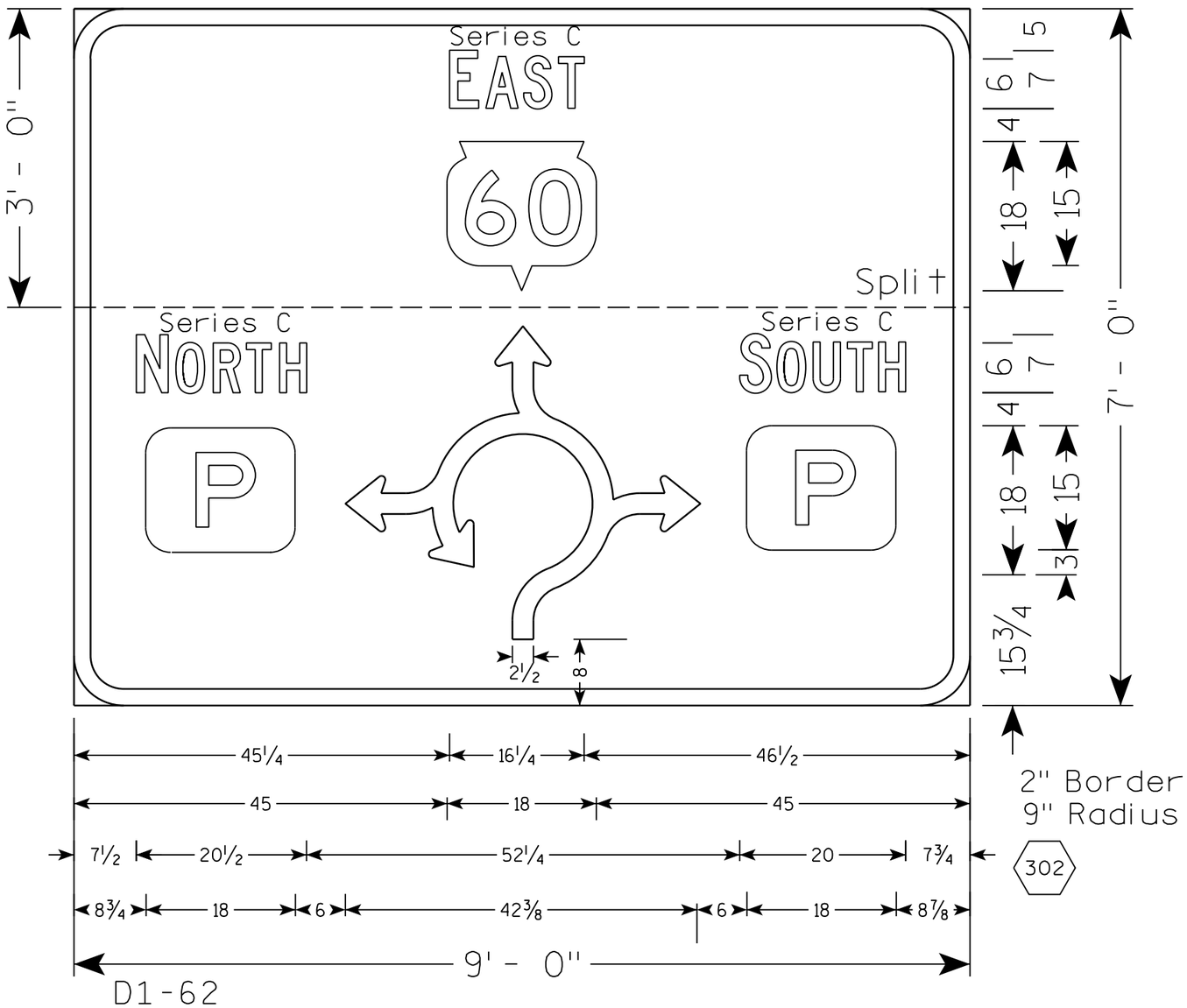

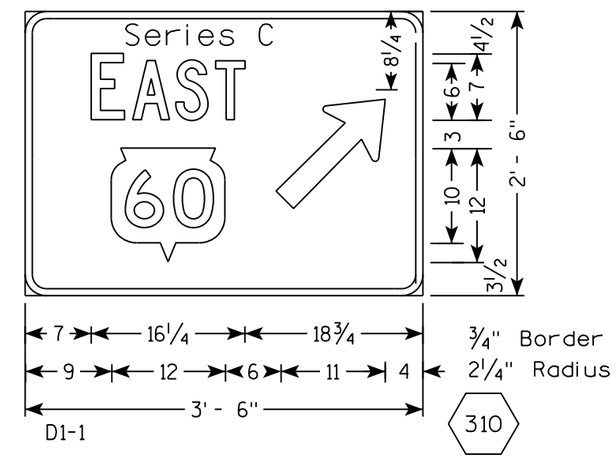

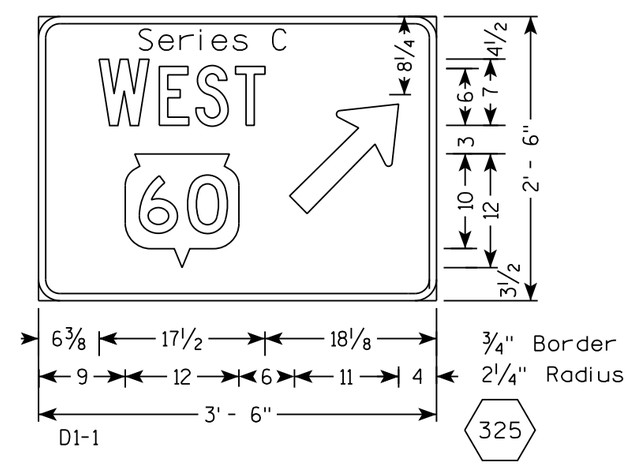

PROJECT NO: 3042-00-73	HWY: STH 60	COUNTY: DODGE	PERMANENT SIGNING	SHEET NO: 144	E

NOTES

1. All Signs Type II - Type H Reflective - reference WIS DOT Standard Specification for HIGHWAY and STRUCTURE CONSTRUCTION latest edition.
2. Color:
   Background - GREEN
   Message - WHITE
3. Message Series - E except as Shown
4. See plate A11-12 for Roundabout Arrow

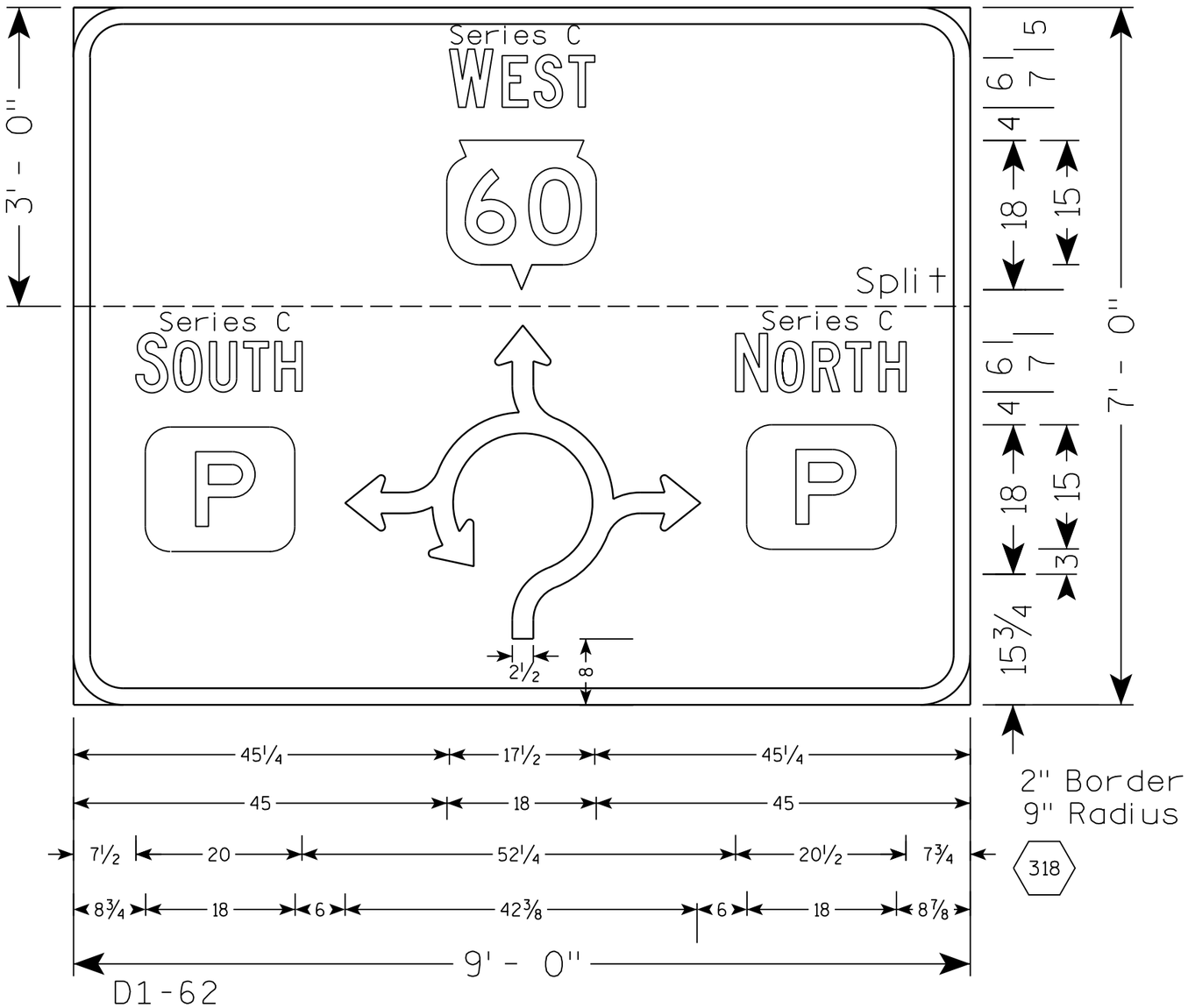

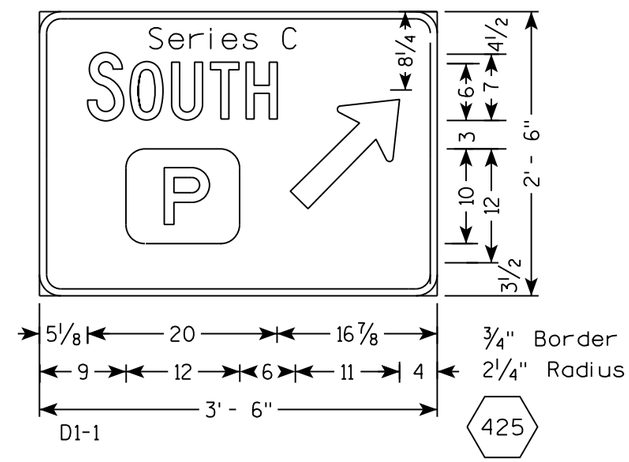

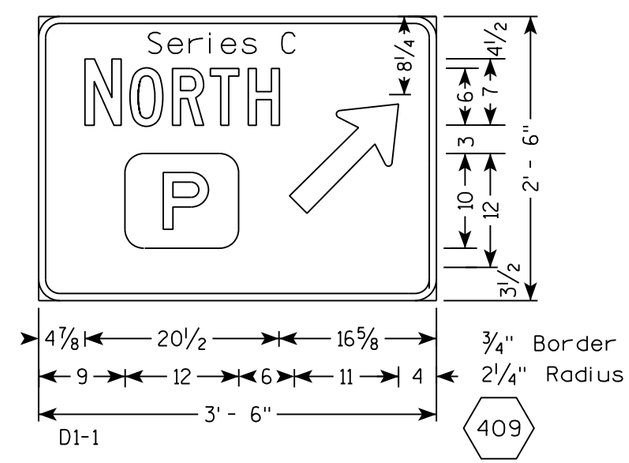

PROJECT NO: 3042-00-73	HWY: STH 60	COUNTY: DODGE	PERMANENT SIGNING	SHEET NO: 145	E

NOTES

1. All Signs Type II - Type H Reflective - reference WIS DOT Standard Specification for HIGHWAY and STRUCTURE CONSTRUCTION latest edition.
2. Color:
   Background - GREEN
   Message - WHITE
3. Message Series - E

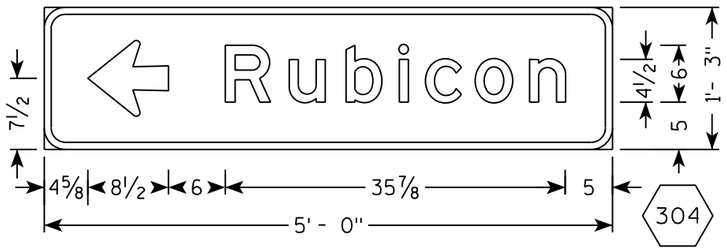

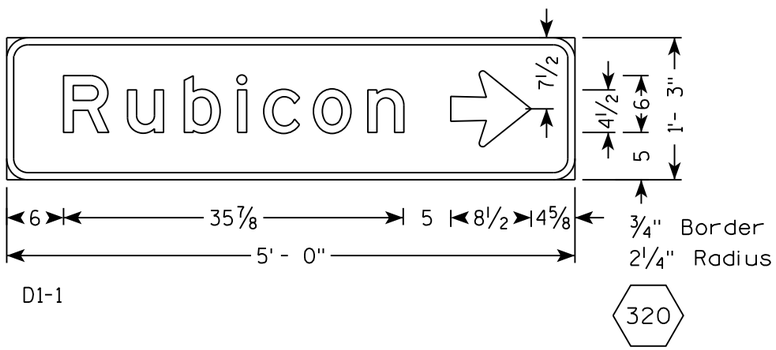

D1-1

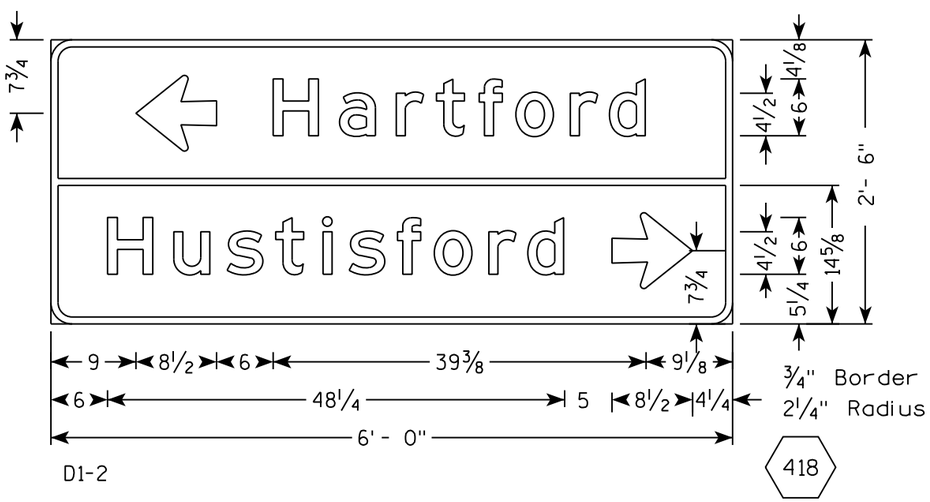

D1-2

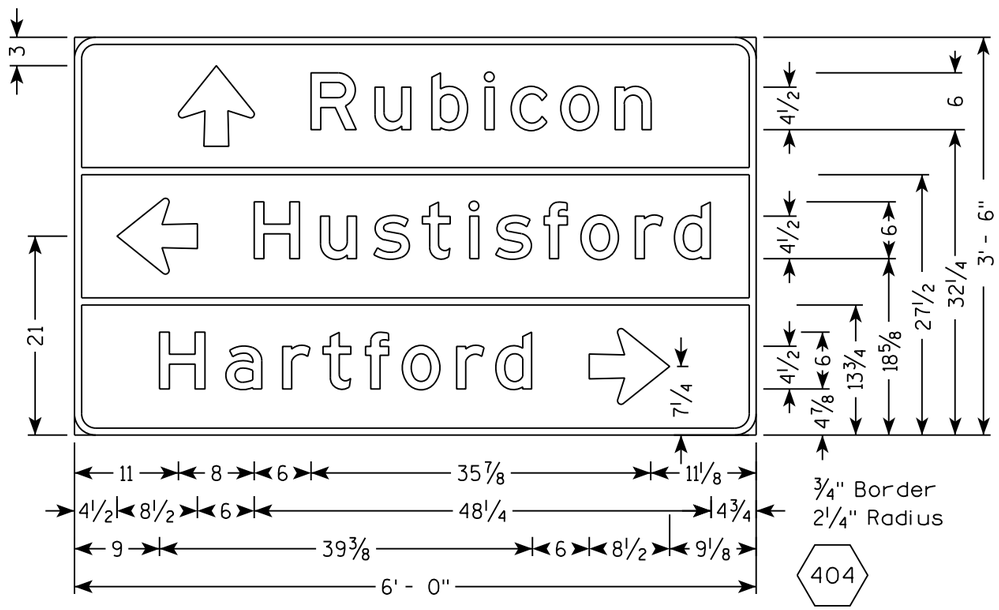

D1-3

7

7

PROJECT NO: 3042-00-73	HWY: STH 60	COUNTY: DODGE	PERMANENT SIGNING	SHEET NO: 146	E

TYPICAL ASSEMBLIES

J1-1

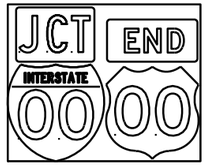

J1-2

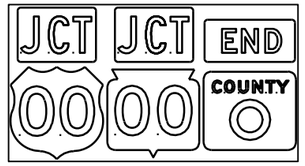

J1-3

J2-1

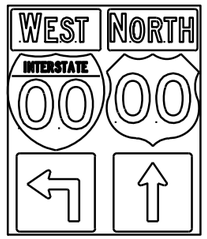

J2-2

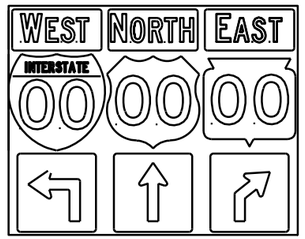

J2-3

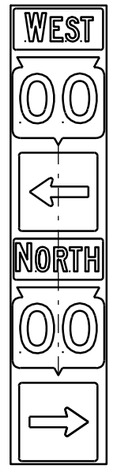

JV

(Typical Vertical J-Assembly
See Note 10 and 11)

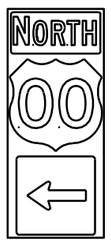

J3-1

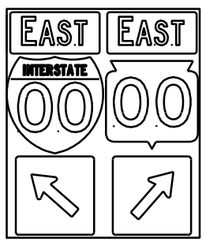

J3-2

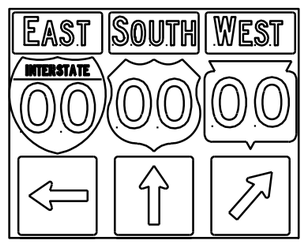

J3-3

J4-1

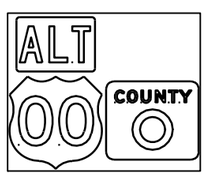

J4-2

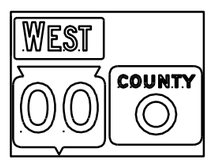

J4-2

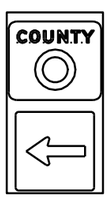

J13-1

J12-1

J32-1

J33-1

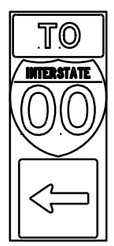

J23-1

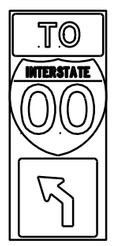

J22-1

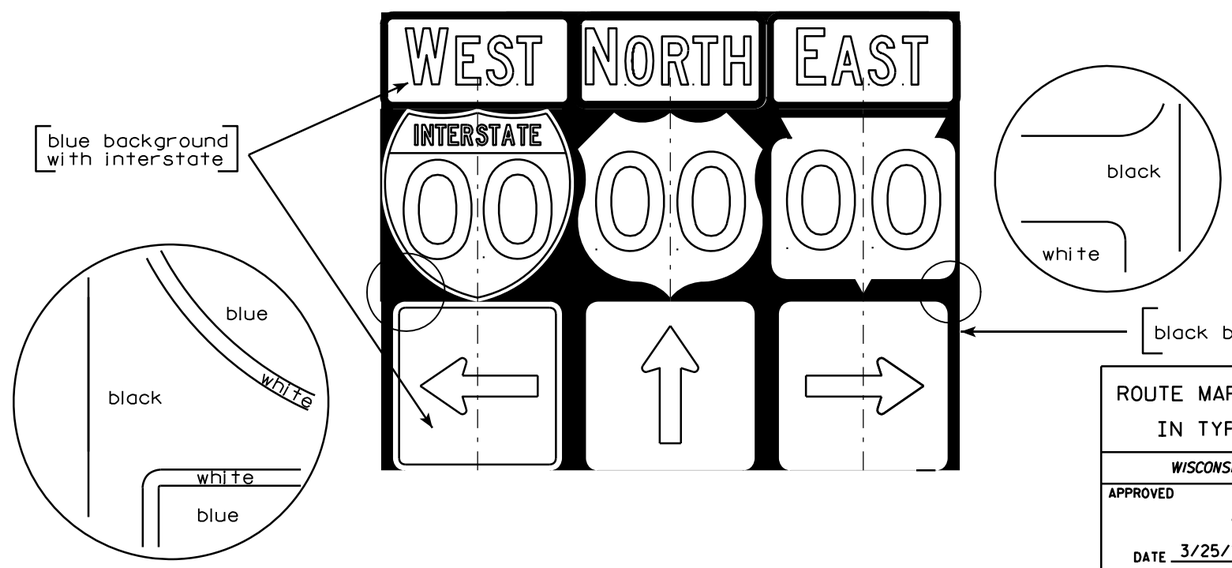

NOTES

1. Signs are Type II - Type H Reflective - reference WIS DOT Standard Specification for HIGHWAY and STRUCTURE CONSTRUCTION latest edition.
2. Color:
   Background - Black Non-reflective
   Message - see Note 5
3. Message Series - See Note 5
4. Corners shall be square or rounded if base material is plywood. If base material is metal the corners shall be rounded.
5. The colors and message spacing on each marker shall be according to the applicable route marker panel specifications.
6. Certain marker heads require the component pieces to be the same color. As an example, all the components used with an M1-1 Interstate marker shall be blue.
7. Single panel j-assemblies shall only be used with route marker shields that are same size. If the route marker shields are different size use multiple piece component.
8. Route assemblies that have 24 inch route shields and have dimensions greater than 48 inches (both vertical and horizontal) shall have one horizontal splice between the arrows and route shields. Vertical splices shall not be used on route assemblies with a horizontal dimension of 144 inches or less. The contractor shall not use more than one vertical joint per sign and the joint shall be between route shields.
9. Route assemblies that have 36 inch shields and have dimensions greater than 48 inchs (both vertical and horizontal) shall have two horizontal splices. One horizontal splice shall be between the cardinal direction and route shields and the other horizontal splice shall be between the arrows and route shields. Vertical splices shall not be used on route assemblies with a horizontal dimension of 144 or less. The contractor shall not use more than one vertical joint per sign and the joint shall be between route shields.
10. All Vertical J Assemblies are given a Sign Code of JV
11. For JV Assemblies that have a mixture of Interstate and non Interstate shields, arrows and cardinals shall be white on blue.

ROUTE MARKERS & COMPONENTS
IN TYPICAL ASSEMBLIES

WISCONSIN DEPT OF TRANSPORTATION

APPROVED Matthew R Rauch
for State Traffic Engineer

DATE 3/25/13 PLATE NO. A2-1S.7

7

7

PROJECT NO:

SHEET NO: 147 E

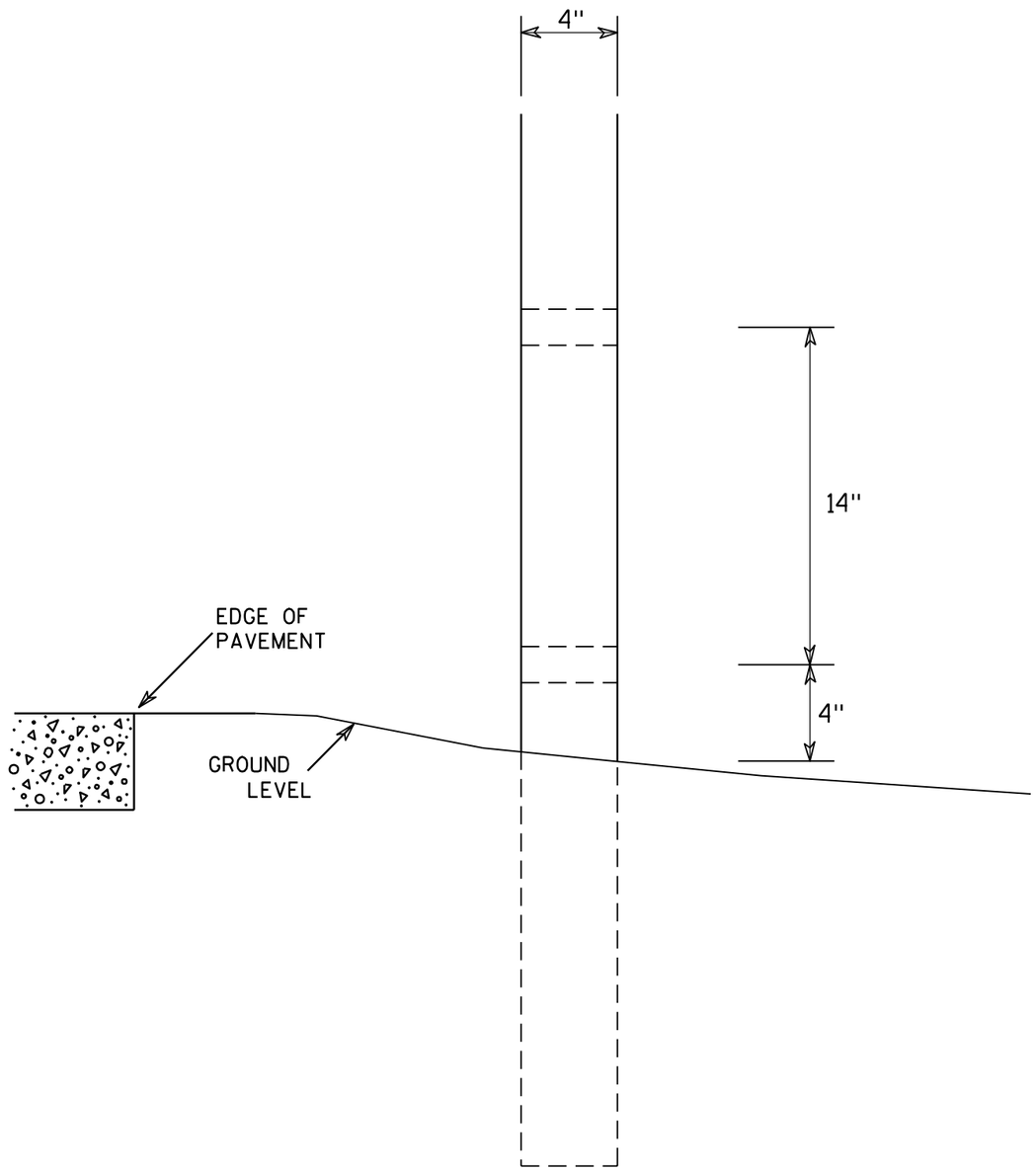

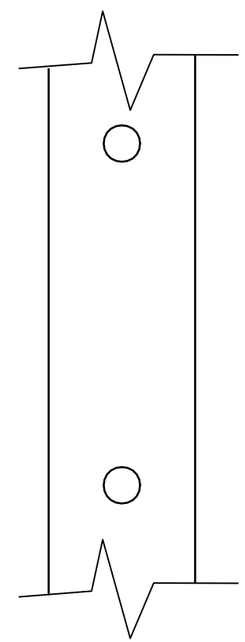

SIDE VIEW

GENERAL NOTES

1. All 4 x 6 Wood Posts shall be modified by having two 1½" diameter holes drilled perpendicular to the roadway centerline.

4 X 6 WOOD POST MODIFICATIONS

WISCONSIN DEPT OF TRANSPORTATION

APPROVED Chester J Spang for State Traffic Engineer

DATE 3/27/97 PLATE NO. A4-11.2

PROJECT NO:	HWY:	COUNTY:		SHEET NO: 148	E

URBAN AREA

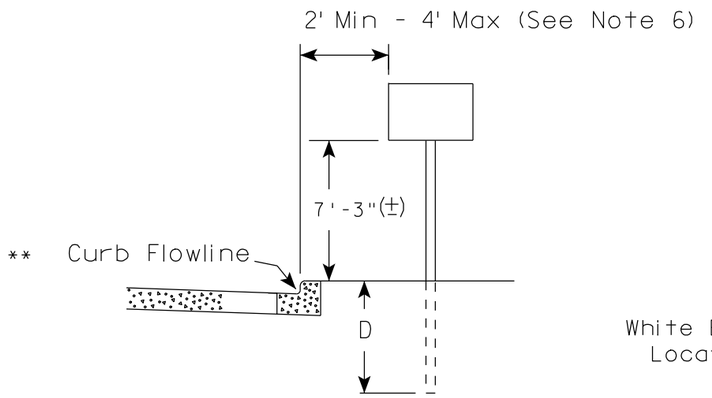

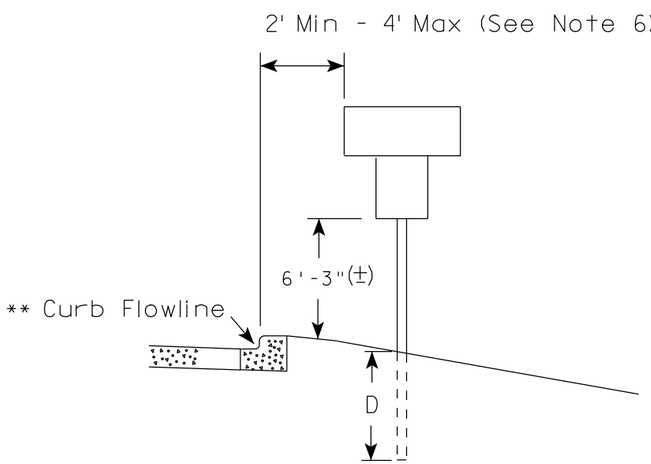

RURAL AREA (See Note 2)

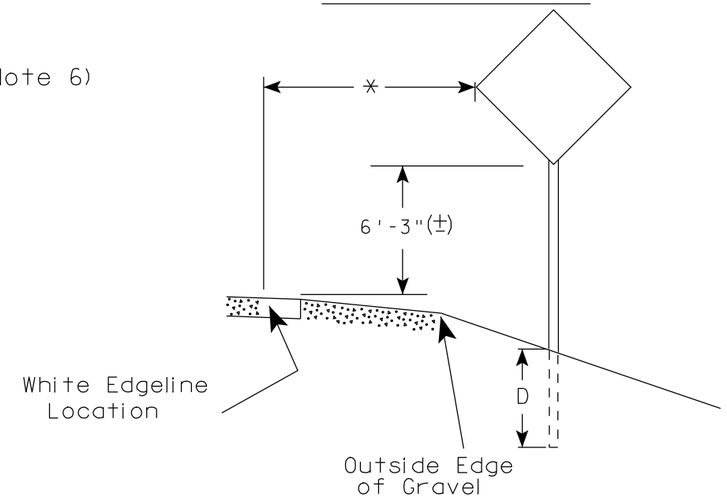

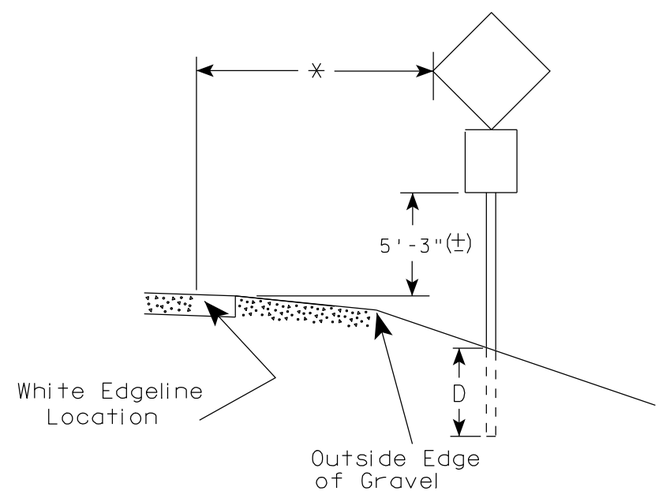

** The existence of curb and gutter does not in itself mandate the vertical clearance illustrated. That height is typically measured where there is sidewalk adjacent to the roadway or parking is permitted. In the absence of sidewalk vertical clearance is measured from the top of the curb. Offset of signs is measured from the flow line.

* 6 feet from edge of a paved shoulder or 12 feet from the edge of pavement (edge line location) or 2 feet from outside edge of gravel, whichever is greater unless directed by project engineer.

GENERAL NOTES

1. Signs wider than 4 feet or larger than 20 sq. ft. shall be mounted on multiple posts. Refer to plate A4-4.
2. If signs are mounted on barrier wall, see A4-10 sign plate.
3. For expressways and freeways, mounting height is 7'- 3" (±) or 6'-3" (±) depending upon existence of a sub-sign.
4. Minimum mounting height for J assemblies (A4-5) is 7'-3" (±) or 6'-3" (±) per urban or rural detail respectively.
5. Minimum mounting height for signs mounted on traffic signal poles is 5'- 3" (±).
6. Offset distance shall be consistent with existing signs or consistent throughout length of project.
7. The (±) tolerance for mounting height is 3 inches.
8. Folding stop signs (R1-1F) shall be mounted at a height of 5'-3" (±) or as directed by the Engineer.
9. The Double Arrow sign (W12-1) shall be mounted at a height of 2'-3" (±). The Chevron sign (W1-8), Roundabout Chevron panel (R6-4B), Enhanced Reference Markers, Clearance Markers (W5-52), Mile Markers (D10 series) & End of Rod Markers (W5-56 & W5-56A) shall be mounted at a height of 4'-3" (+).

POST EMBEDMENT DEPTH

Area of Sign Installation (Sq. Ft.)	D (Min)
20 or Less	4'
Greater than 20	5'

TYPICAL INSTALLATION OF PERMANENT TYPE II SIGNS ON SINGLE POSTS

WISCONSIN DEPT OF TRANSPORTATION

APPROVED Matthew R Rauch for State Traffic Engineer

DATE 5/24/2013 PLATE NO. A4-3.17

7

7

PROJECT NO:	HWY:	COUNTY:		SHEET NO: 149	E

URBAN AREA

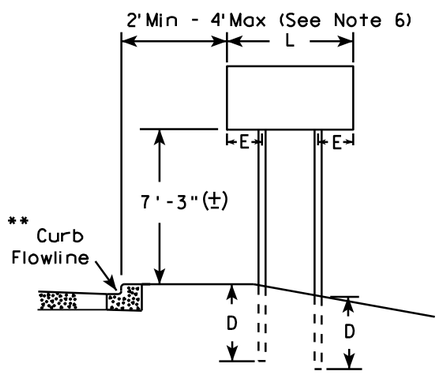

RURAL AREA (See Note 3)

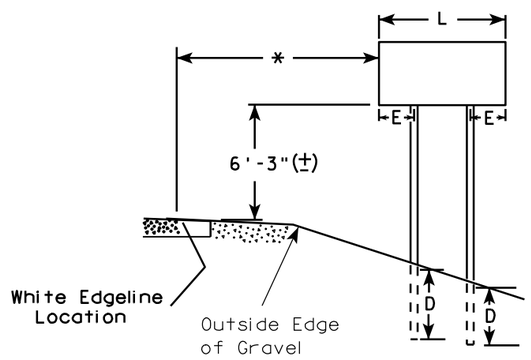

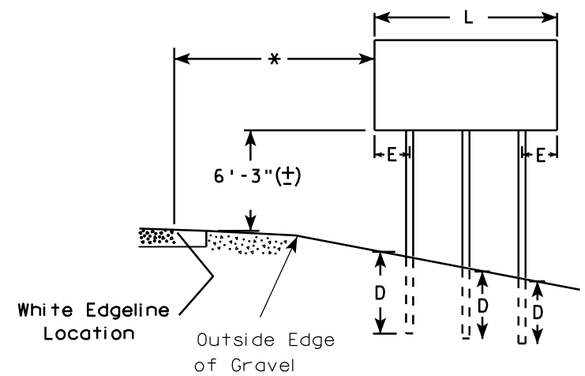

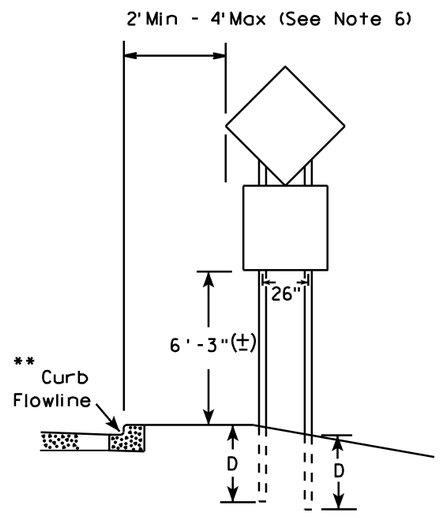

48" DIAMOND WARNING SIGN

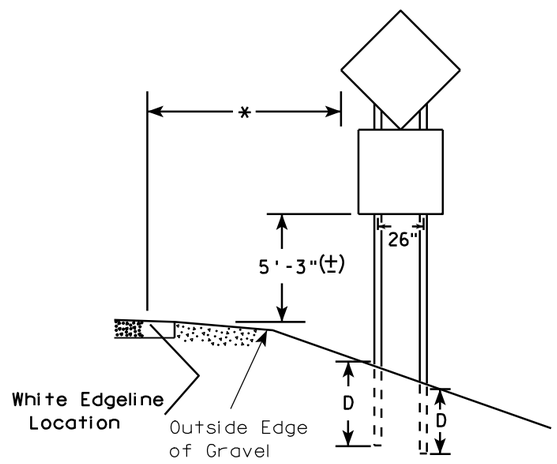

48" DIAMOND WARNING SIGN

GENERAL NOTES

1. For multiple post installations, individual post spacing shall be greater than 3'-6".
2. See tables below for required number of posts.
3. For expressways and freeways, mounting height is 7'-3" (±) or 6'-3" (±) depending upon existence of sub-sign.
4. The (±) tolerance for mounting height is 3 inches.
5. Minimum mounting height for J assemblies (A4-5) is 7'-3" (±) or 6'-3" (±) per urban or rural detail respectively.
6. Offset distance shall be consistent with existing signs or consistent throughout length of project.
7. Folding stop signs (R1-1F) shall be mounted at a height of 5'-3" (±) or as directed by the engineer.
8. The Double Arrow sign (W12-1) shall be mounted at a height of 2'-3" (±). The Chevron sign (W1-8), Roundabout Chevron panel (R6-4B), Clearance Markers (W5-52), Mile Markers (D10 series) & End of Road Markers (W5-56 & W5-56A) shall be mounted at a height of 4"-3" (±).

* 6 feet from edge of a paved shoulder or 12 feet from the edge of pavement (edge line location) or 2 feet from outside edge of gravel, whichever is greater unless directed by project engineer.

** The existence of curb and gutter does not in itself mandate the vertical clearance illustrated. That height is typically measured where there is sidewalk adjacent to the roadway or parking is permitted. In the absence of sidewalk vertical clearance is measured from the top of the curb. Offset of signs is measured from the flow line.

*** See A4-3 sign plate for signs 4' or less in width or 20 S.F. or less in area.

SIGN SHAPE OTHER THAN DIAMOND (TWO POSTS REQUIRED)	
L	E
*** Greater than 48" Less than 60"	12"
60" to 120"	L/5

SIGN SHAPE OTHER THAN DIAMOND (THREE POSTS REQUIRED)	
L	E
Greater than 120" less than 168"	12"

SIGN SHAPE OTHER THAN DIAMOND (FOUR POSTS REQUIRED)	
L	E
168" and greater	12"

POST EMBEDMENT DEPTH

Area of Sign Installation (Sq. Ft.)	D (Min)
20 or Less	4'
Greater than 20	5'

TYPICAL INSTALLATION OF TYPE II SIGNS ON MULTIPLE POSTS

WISCONSIN DEPT OF TRANSPORTATION

APPROVED Matthew R Rauch
for State Traffic Engineer

DATE 9/21/2011 PLATE NO. A4-4.11

PROJECT NO:	HWY:	COUNTY:		SHEET NO: 150	E

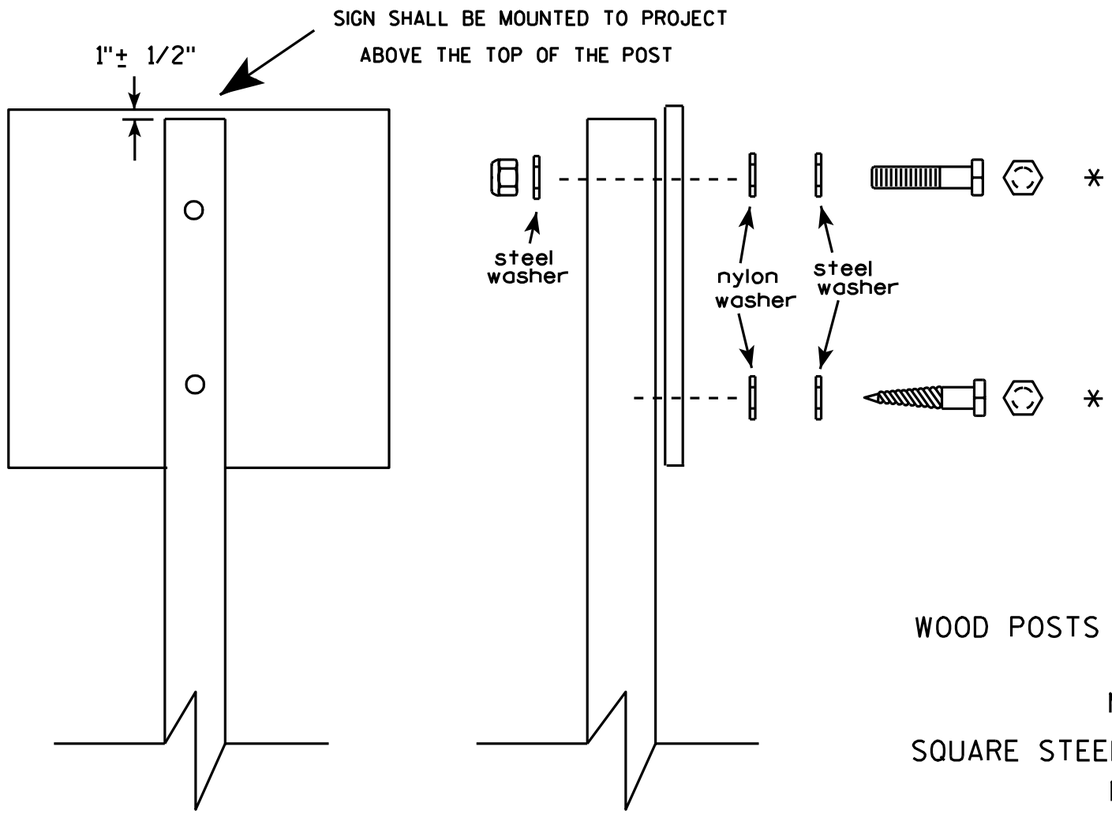

Nuts, bolts and lags used for mounting signs shall have hexagonal heads and shall be either :

a. Hot dip galvanized in accordance with ASTM Designation: A 153, Class D, or SC 3

b. Electro-galvanized in accordance with ASTM Designation : B 633, TYPE III, SC 3.

Threads on bolts and nuts shall be manufactured with sufficient allowance for the cadmium plate or galvanized coating to permit the nuts to run freely on the bolts.

WOOD POSTS (4" x 4" or 4" x 6")

LAG SCREWS - 3/8" X 3"

MACHINE BOLTS - 5/16" X 6-1/2" or 7" Length w/ nuts

SQUARE STEEL POSTS (2" x 2")

MACHINE BOLTS - 3/8" X 3-1/4" Length w/ nuts

RIVETS - 9/32 " (6605-9-6) BULB-TITE, TRI-FOLD, ALUMINUM BODY/MANDREL O.D. FLANGE .720-.765 INCH, GRIP RANGE .042-.375 INCH

WASHERS (ALL POSTS) -

1-1/4" O.D. X 3/8" I.D. X 1/16" STEEL

1-1/4" O.D. X 3/8" I.D. X .080 NYLON for all Type H signs.

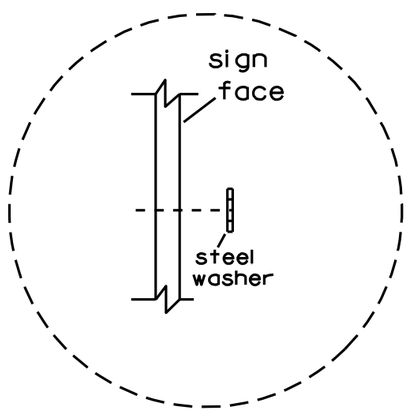

Washer Placement when Sign Has Other Than Type H or Type F Face

* Two different fastening systems are shown for illustration purposes. On any individual sign, either one or the other system shall be used. Actual number of fasteners per sign varies with the sign area, but normally there are two. For a single post installation, all signs greater than 9 sq. ft. require the use of 3 fasteners.

ATTACHMENT OF SIGNS TO POSTS

WISCONSIN DEPT OF TRANSPORTATION

APPROVED Matthew R Rauch
for State Traffic Engineer

DATE 3/23/10 PLATE NO. A4-8.7

PROJECT NO:				SHEET NO: 151	E

TELESCOPIC TUBING ANCHORS
TWO PIECE SYSTEM

2 1/4" SQUARE
12 GAUGE
PERFORATED
GALVANIZED FINISH

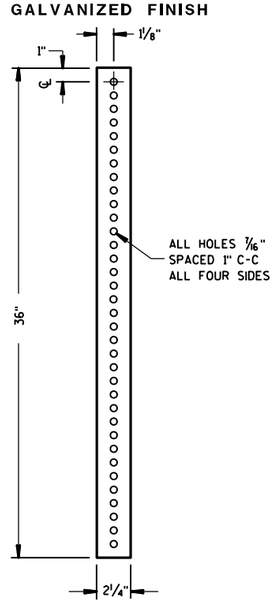

2 1/2" SQUARE
12 GAUGE
OMNI-DIRECTIONAL
PERFORATED
SOIL STABILIZING SLEEVE
GALVANIZED FINISH

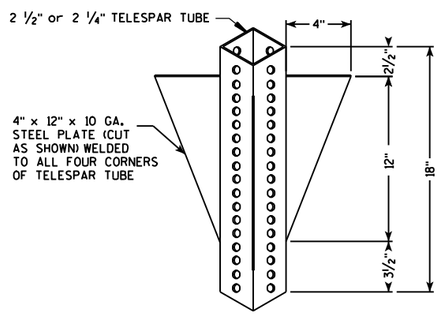

DETAIL OF TUBULAR STEEL SIGN POST
(IN POURED CONCRETE OR ASPHALT)

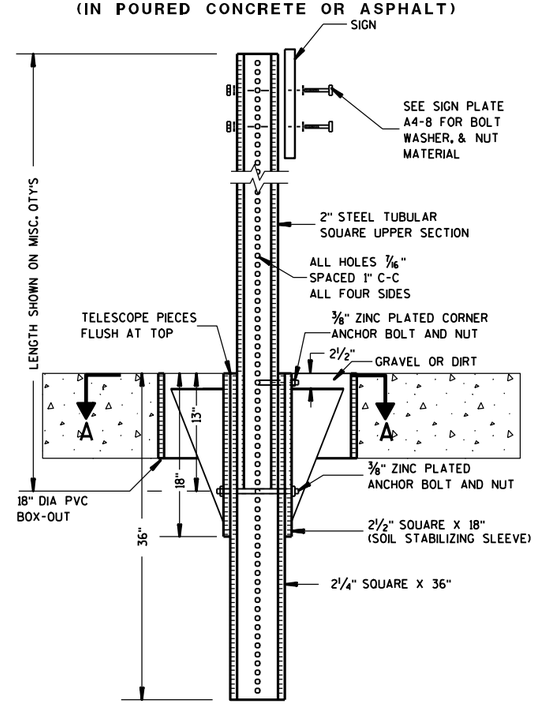

DETAIL OF TUBULAR STEEL SIGN POST
(IN LOCATIONS OTHER THAN POURED CONCRETE OR ASHALT)

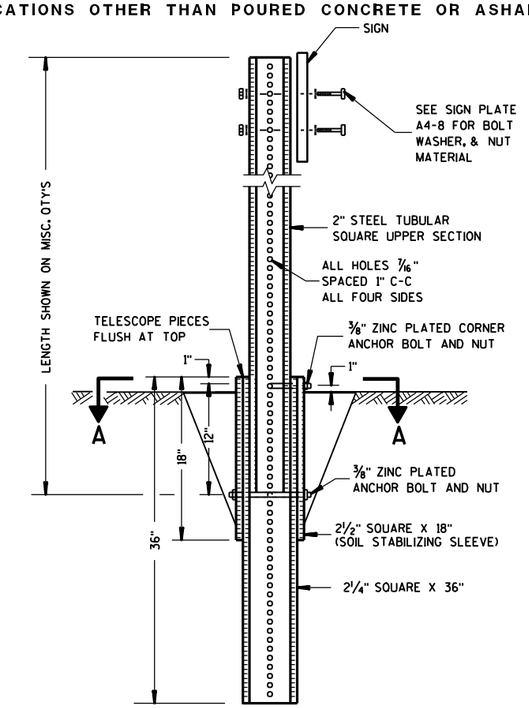

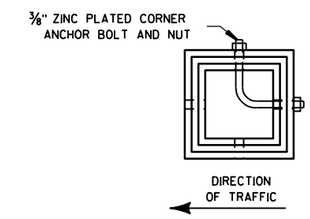

SECTION A-A

Area of Sign Installation (Sq. Ft.)	Number of Required Posts
9 or less	1
Greater than 9 less than or equal to 18	2
Greater than 18 less than or equal to 27	3

Signs wider than 3 feet or larger than 9 sq. ft shall be mounted on multiple posts (see above table).

TUBULAR STEEL
SIGN POST
A4-9

WISCONSIN DEPT OF TRANSPORTATION

APPROVED Matthew R Rauch
for State Traffic Engineer
DATE 5/30/12 PLATE NO. A4-9.7

7

7

PROJECT NO:	HWY:	COUNTY:		SHEET NO: 152	E

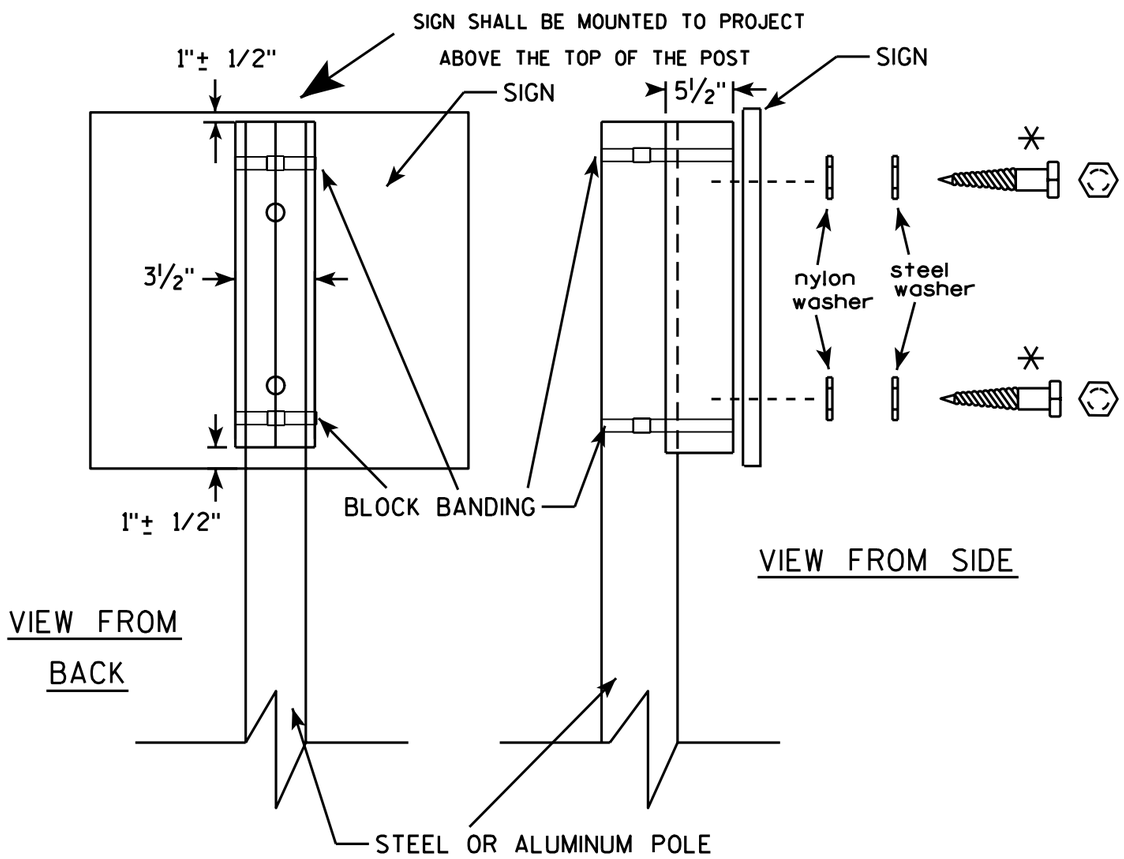

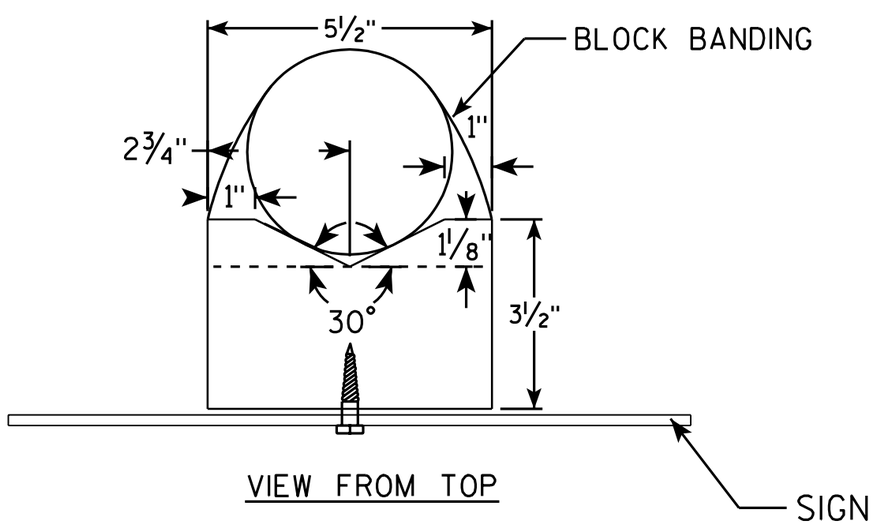

GENERAL NOTES

1. WOOD 4"X6" POST MATERIAL SHALL CONFORM TO 507.2.2 OF THE WisDOT STANDARD SPECIFICATIONS
2. BLOCK BANDING AND CLIPS SHALL BE STAINLESS STEEL, ¾" WIDTH AND 0.025" THICKNESS
3. SIGNS 3' OR GREATER IN HEIGHT SHALL UTILIZE 3 BLOCK BANDS. SIGNS UNDER 3' IN HEIGHT SHALL UTILIZE 2 BLOCK BANDS
4. ACTUAL NUMBER OF FASTENERS PER SIGN VARIES WITH THE SIGN AREA, BUT NORNALLY THERE ARE TWO. FOR SIGNS GREATER THAN 9 S.F. 3 FASTENERS SHALL BE USED.
5. ALL SIGN MOUNTING BOLTS AND WASHERS SHALL BE EITHER:
   a. Hot dip or mechanically galvanized in accordance with ASTM Designation: A 153, Class D, or
   b. Cadmium plated in accordance with ASTM Designation : B 766 TYPE 3, Class 12, or
   c. Electro-galvanized in accordance with ASTM Designation : B 633, TYPE III, SC 3.
6. ALL BOLTS SHALL HAVE HEXAGONAL HEADS.
7. STEEL WASHERS SHALL BE 1¼" O.D. X ⅜" I.D. X 1/16"
8. NYLON WASHERS SHALL BE 1¼" O.D. X ⅜" I.D. X .080 FOR TYPE H OR TYPE F FACE SIGN

✳ LAG BOLTS SHALL BE ⅜" X 2½"

BLOCK BANDING DETAIL
(V-BLOCK OPTION)

WISCONSIN DEPT OF TRANSPORTATION

APPROVED Matthew R Rauch
for State Traffic Engineer

DATE 7/12/07 PLATE NO. A5-10.1

BANDING

SINGLE SIGN

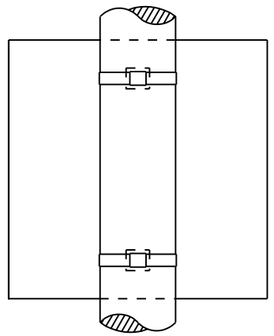

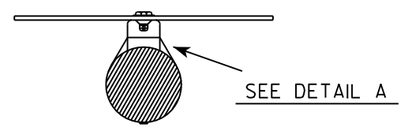

"J" ASSEMBLY

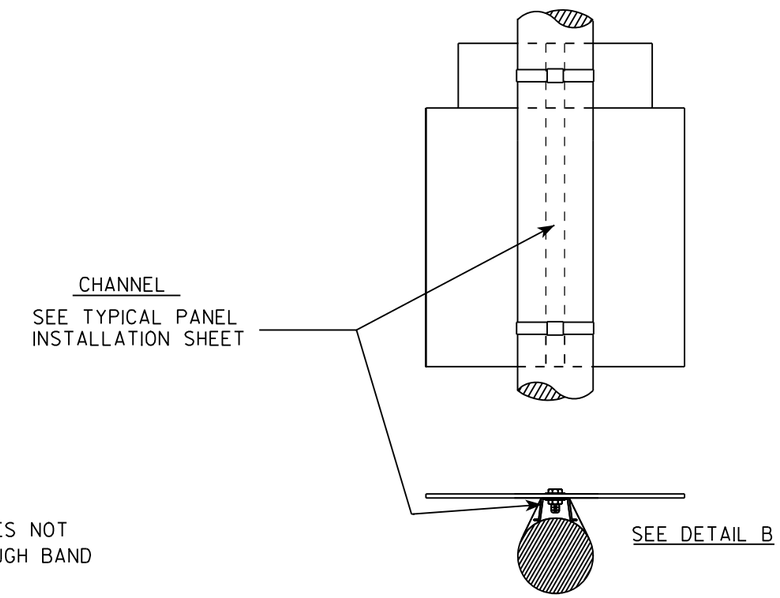

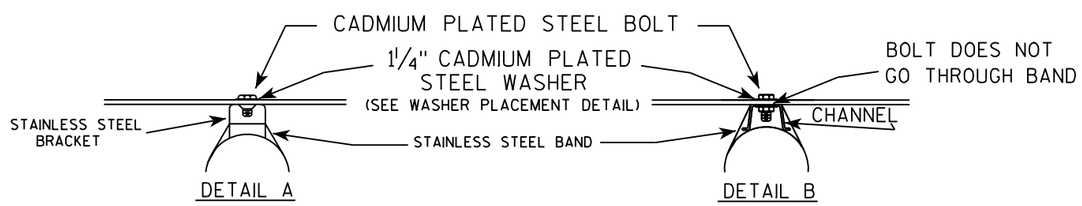

WASHER PLACEMENT

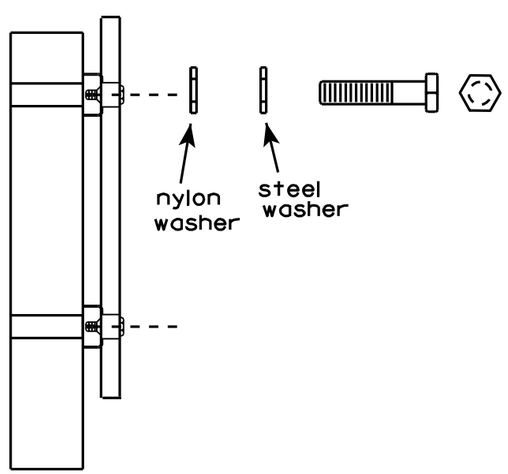

WASHERS (ALL POSTS) -

1-1/4" O.D. X 3/8" I.D. X 1/16" STEEL

1-1/4" O.D. X 3/8" I.D. X .080 NYLON

FOR ALL TYPE H SIGNS

GENERAL NOTES

1. Any sign over 3 feet in width shall use the V-Block banding method. See A5-10 standard plate.
2. Signs 3 feet or greater in height shall have three bracket bands installed. Signs less than 3 feet in height shall have two bracket bands installed.
3. Banding and assembly bracket shall be stainless steel. All bands shall be ¾" in width and 0.025" thickness.

STANDARD SIGN

SIGN BANDING DETAILS

WISCONSIN DEPT OF TRANSPORTATION

APPROVED Matthew R Rauch for State Traffic Engineer

DATE 8/16/13 PLATE NO. A5-9.3

PROJECT NO:	HWY:	COUNTY:		SHEET NO: 154	E

NOTES

1. Sign is Type II - Type H Reflective - reference WIS DOT Standard Specification for HIGHWAY and STRUCTURE CONSTRUCTION latest edition.
2. Color:
   Background - White
   Message - (See Note 5)
3. Message Series - (See Note 6)
4. Corners may be square or rounded when base material is plywood but borders shall be rounded as shown. When base material is metal, the corners and borders shall be rounded.
5. Border - Blue
   Line 1 - Red
   Line 2 - Black
   Line 3-5 - Blue
6. Line 1 - Dutch 8011L
   Line 2 - Series E
   Line 3-5 - Series C
7. Contractor shall provide and install a new post bracket in accordance with the I55-56B sign detail.

Background Colors of Symbol*

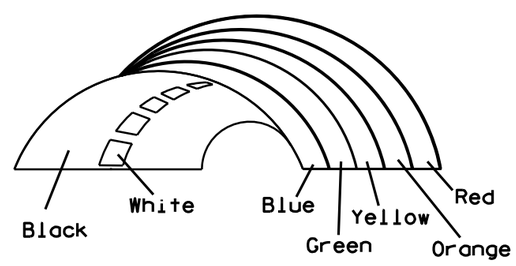

*1/4" Black Border between each color of rainbow and border of rainbow

SIZE	A	B	C	D	E	F	G	H	I	J	K	L	M	N	O	P	Q	R	S	T	U	V	W	X	Y	Z	Area sq. ft.
1																											
2	30	36	1 1/2	1/2	5/8	3	2	3 1/2	2 7/8	1	8	2 1/8	11 1/4	11 1/8	9 3/8	1 1/4		3/4	12 5/8	7 1/2							7.5
3																											
4																											
5																											

STANDARD SIGN
I55-56

WISCONSIN DEPT OF TRANSPORTATION

APPROVED Matthew R Rauch
for State Traffic Engineer

DATE 4/27/11 PLATE NO. 155-56.3

PROJECT NO:	HWY:	COUNTY:		SHEET NO: 155

ISOMETRIC VIEW

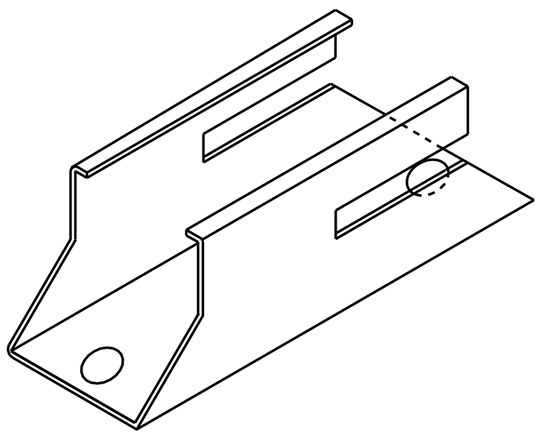

TOP VIEW

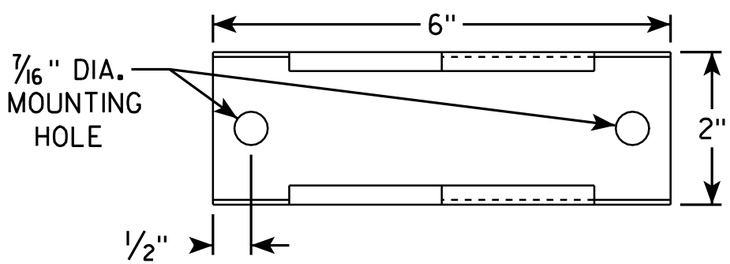

SIDE VIEW

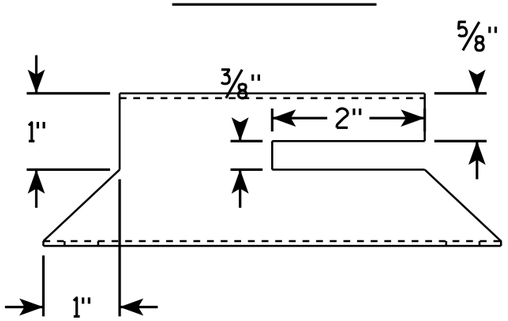

END VIEW

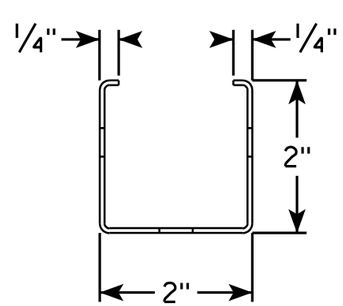

NOTES

1. Must be capable of permanent attachment to a wood or steel channel sign post utilizing the fastening hardware specified on the A4-8 sign plate.
2. Shall be entirely primed and painted with two coats of a black powder coated enamel paint.
3. Shall be made with 12 gauge steel, and incorporate no welds, no hinged components, no threaded lock-type components, and no parts which are loose or can be separated from the main body.
4. Shall have rounded edges with at least 1/8" radii.
5. Shall not have unrounded and uncoated metal edges which can contact the back surface of the roll-up sign.
6. Top of bracket shall be mounted 2' below the bottom of the I55-56 sign.
7. Cost of bracket and fastening hardware shall be incidental to the I55-56 sign.

SIDE VIEW

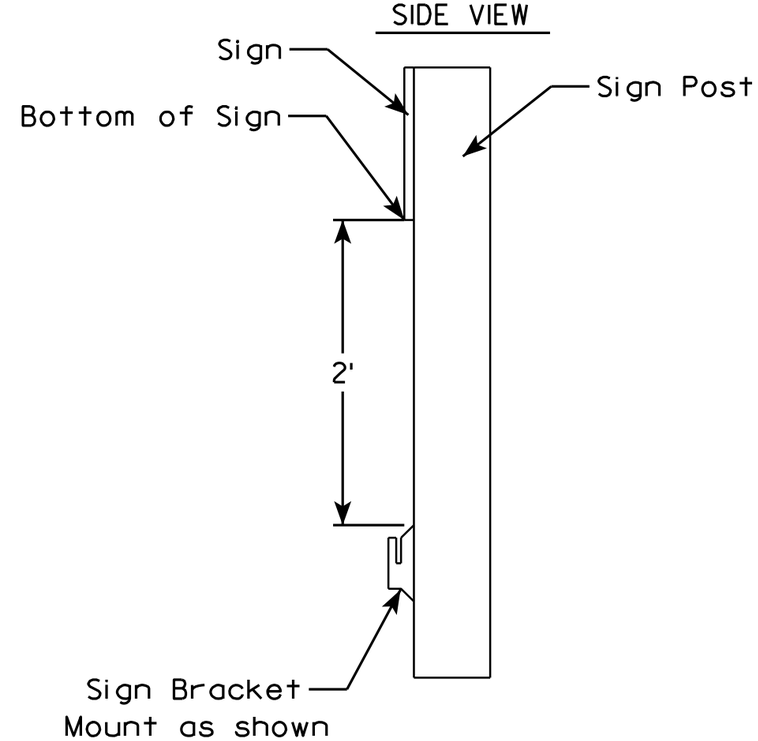

ROLLUP SIGN BRACKET
I55-56B

WISCONSIN DEPT OF TRANSPORTATION

APPROVED Matthew R Rauch
for State Traffic Engineer

DATE 2/5/10 PLATE NO. I55-56B.1

PROJECT NO:	HWY:	COUNTY:		SHEET NO: 156	E

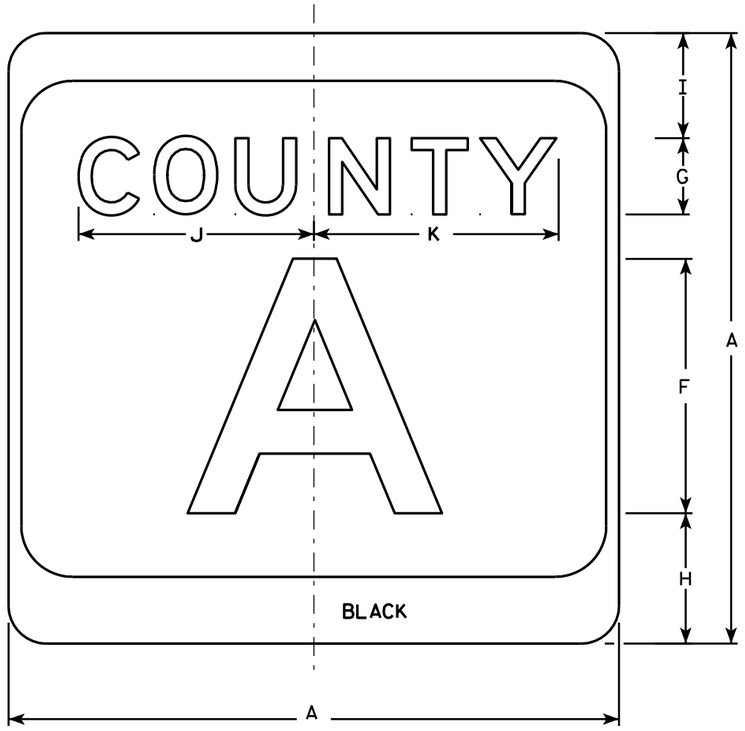

M1-5A

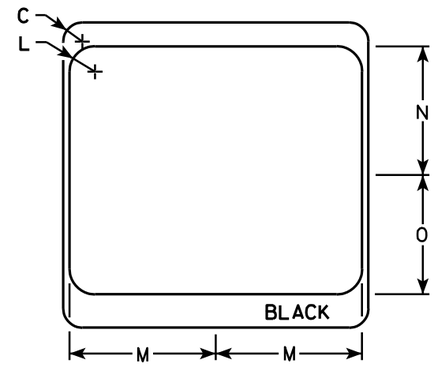

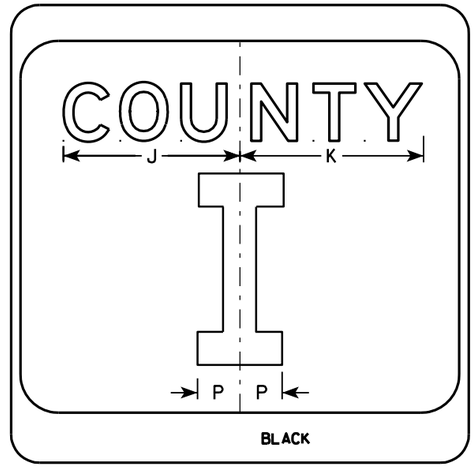

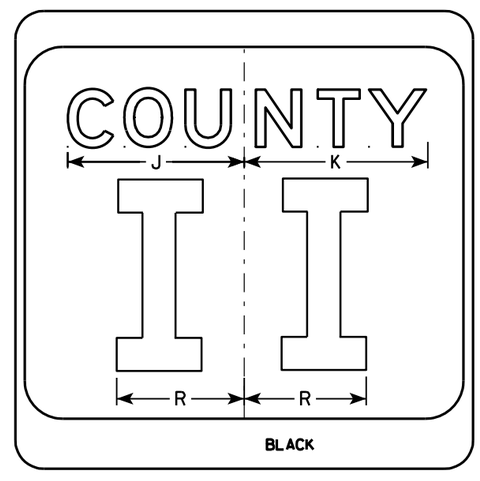

NOTES

1. Sign is Type II - see Note 7 - reference WIS DOT Standard Specification for HIGHWAY and STRUCTURE CONSTRUCTION latest edition.
2. Color:
   Background - White & Black - See Note 7
   Message - Black
3. Message Series - see Note 5
4. Corners may be square or rounded when base material is plywood but borders shall be rounded as shown. When base material is metal, the corners and borders shall be rounded.
5. Message Series E for 1 letter.
   Message Series D for 2 letters unless message is too big then Series C.
   Message Series C for 3 letters unless message is too big then Series B.
6. Substitute appropriate letters & optically center to achieve proper balance.
7. Permanent Signs
   Background - Type H Reflective
   Detour or temporary Signs
   Background - Reflective

SIZE	A	B	C	D	E	F	G	H	I	J	K	L	M	N	O	P	Q	R	S	T	U	V	W	X	Y	Z	Area sq. ft.
1																											
2	24		1 1/2			10	3	5 1/8	4 1/8	9 1/4	9 5/8	2	11 1/2	10 1/8	9 3/8	2 1/4		6 5/8									4.0
3	36		2 1/4			16	4	7 5/8	5 5/8	12 1/4	12 7/8	3	17 1/8	15 1/4	14	3 3/8		10									9.0
4	36		2 1/4			16	4	7 5/8	5 5/8	12 1/4	12 7/8	3	17 1/8	15 1/4	14	3 3/8		10									9.0
5	36		2 1/4			16	4	7 5/8	5 5/8	12 1/4	12 7/8	3	17 1/8	15 1/4	14	3 3/8		10									9.0

CTH MARKER
M1-5A FOR ASSEMBLIES

WISCONSIN DEPT OF TRANSPORTATION

APPROVED Matthew R Rauch
for State Traffic Engineer

DATE 9/27/11 PLATE NO. M1-5A.8

7

7

PROJECT NO: | HWY: | COUNTY: | SHEET NO: 157 | E

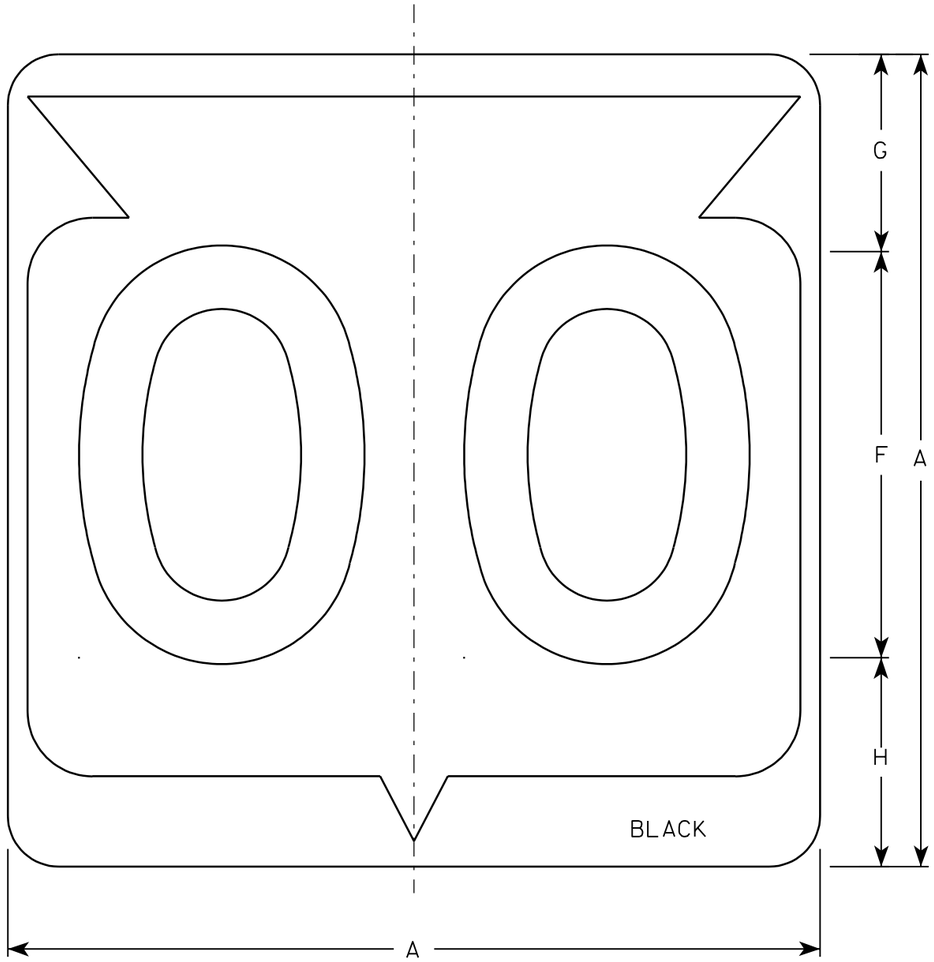

M1-6

NOTES

1. Sign is Type II - See Note 6 - reference WIS DOT Standard Specification for HIGHWAY and STRUCTURE CONSTRUCTION latest edition.
2. Color:
   Background - White & Black - See Note 6
   Message - Black
3. Message Series - See note 5
4. Corners may be square or rounded when base material is plywood but borders shall be rounded as shown. When base material is metal, the corners and borders shall be rounded.
5. Substitute appropriate Series numerals and adjust spacing as per plate A10-1.
6. Permanent Signs
   Background - Type H Reflective
   Detour or temporary Signs
   Background - Reflective

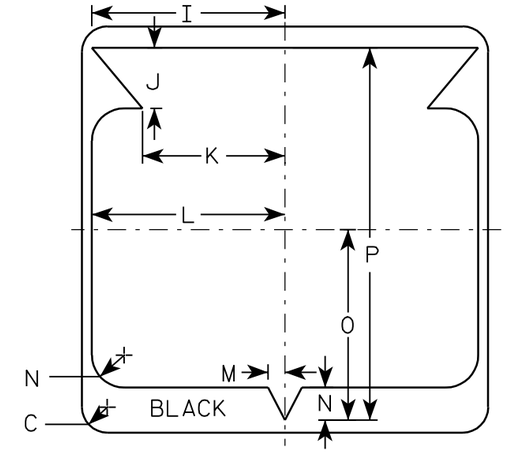

Metric equivalent for this sign is:

SIZE	
1	
2	600 mm X 600 mm
3	900 mm X 900 mm
4	900 mm X 900 mm
5	900 mm X 900 mm

SIZE	A	B	C	D	E	F	G	H	I	J	K	L	M	N	O	P	Q	R	S	T	U	V	W	X	Y	Z	Area sq. ft.	Area m2
1																												
2	24		1 1/2			12	5 1/2	6 1/2	10 1/4	2 1/2	8 7/8	11 1/2	1	1 7/8	11 1/4	21 7/8											4.0	.36
3	36		2 1/4			18	8 3/4	9 1/4	15 3/8	5 3/8	12 5/8	17 1/8	1 1/2	2 7/8	16 7/8	33											9.0	.81
4	36		2 1/4			18	8 3/4	9 1/4	15 3/8	5 3/8	12 5/8	17 1/8	1 1/2	2 7/8	16 7/8	33											9.0	.81
5	36		2 1/4			18	8 3/4	9 1/4	15 3/8	5 3/8	12 5/8	17 1/8	1 1/2	2 7/8	16 7/8	33											9.0	.81

STATE ROUTE MARKER
M1-6 FOR ASSEMBLIES

WISCONSIN DEPT OF TRANSPORTATION

APPROVED Chester J Spang
for State Traffic Engineer

DATE 3/20/02 PLATE NO. M1-6.9

PROJECT NO: | HWY: | COUNTY: | SHEET NO: 158 | E

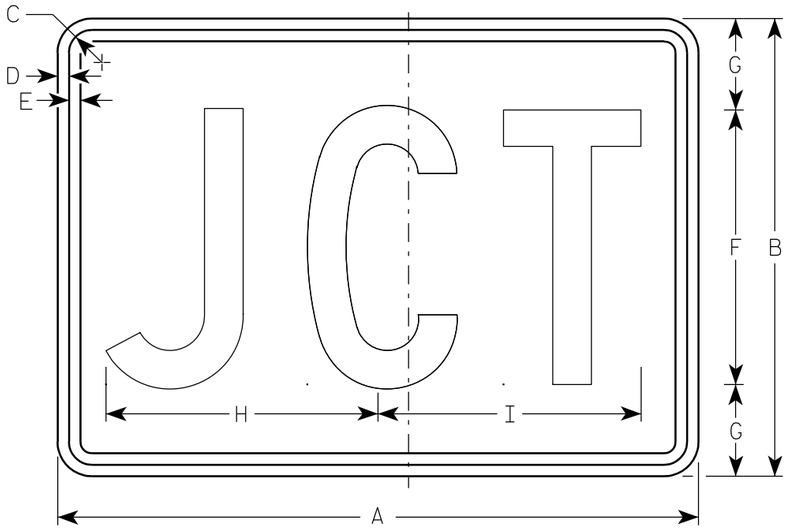

M2-1
MK2-1
MM2-1
MR2-1

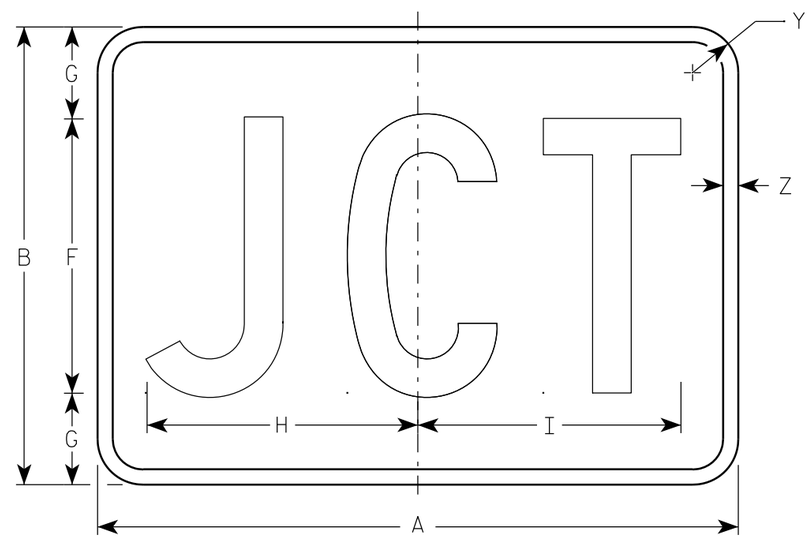

MB2-1
MG2-1
MN2-1

NOTES

1. Sign is Type II - See Note 5 - reference WIS DOT Standard Specification for HIGHWAY and STRUCTURE CONSTRUCTION latest edition.
2. Color:
   Background - See note 5
   Message - See note 5
3. Message Series - C
4. Corners may be square or rounded when base material is plywood but borders shall be rounded as shown. When base material is metal, the corners and borders shall be rounded.
5. M2-1 Background - White - Type H Reflective
   (Detour or temporary Signs - Reflective)
   Message - Black
   MB2-1 Background - Blue
   Message - White - Type H Reflective
   (Detour or temporary Signs - Reflective)
   MG2-1 Background - Green
   Message - White - Type H Reflective
   MK2-1 Background - Green
   Message - White - Type H Reflective
   MM2-1 Background - White - Type H Reflective
   Message - Green
   MN2-1 Background - Brown
   Message - White - Type H Reflective
   MR2-1 Background - Brown
   Message - Yellow - Type H Reflective

7

7

Metric equivalent for this sign is:

SIZE	
1	
2	525 mm X 375 mm
3	750 mm X 525 mm
4	750 mm X 525 mm
5	750 mm X 525 mm

SIZE	A	B	C	D	E	F	G	H	I	J	K	L	M	N	O	P	Q	R	S	T	U	V	W	X	Y	Z	Area sq. ft.	Area m2
1																												
2	21	15	1 1/8	3/8	3/8	9	3	8 7/8	8 5/8																1 1/2	1/2	2.20	0.20
3	30	21	1 1/8	3/8	3/8	13	4	12 7/8	12 3/8																1 1/2	1/2	4.40	0.20
4	30	21	1 1/8	3/8	3/8	13	4	12 7/8	12 3/8																1 1/2	1/2	4.40	0.20
5	30	21	1 1/8	3/8	3/8	13	4	12 7/8	12 3/8																1 1/2	1/2	4.40	0.20

STANDARD SIGN
M2-1

WISCONSIN DEPT OF TRANSPORTATION

APPROVED Matthew R Rauch
for State Traffic Engineer

DATE 3/16/10 PLATE NO. M2-1.10

PROJECT NO: | HWY: | COUNTY: | SHEET NO: 159 | E

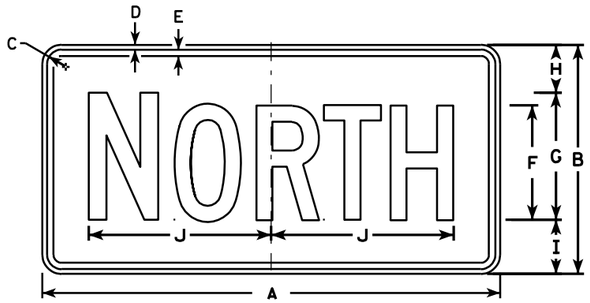

M3-1
MK3-1
MO3-1

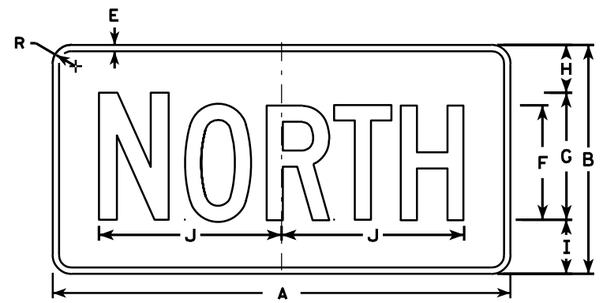

MB3-1
MG3-1
MM3-1
MN3-1

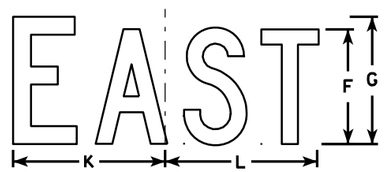

M3-2
MK3-2
MO3-2

MB3-2
MG3-2
MM3-2
MN3-2

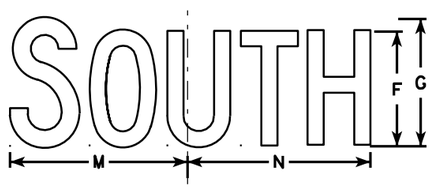

M3-3
MK3-3
MO3-3

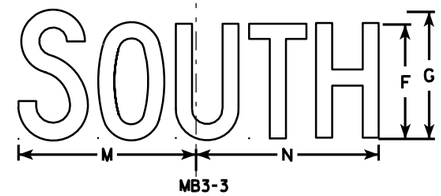

MB3-3
MG3-3
MM3-3
MN3-3

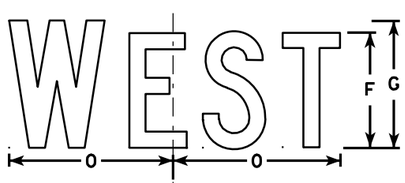

M3-4
MK3-4
MO3-4

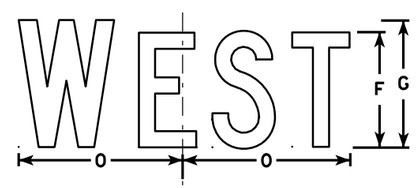

MB3-4
MG3-4
MM3-4
MN3-4

NOTES

1. All Signs Type II - See Note 5 - reference WIS DOT Standard Specification for HIGHWAY and STRUCTURE CONSTRUCTION latest edition.
2. Color:
   Background - See note 5
   Message - See note 5
3. Message Series - C
4. Corners may be square or rounded when base material is plywood but borders shall be rounded as shown. When base material is metal, the corners and borders shall be rounded.
5. M3-1 thru M3-4 Background - White - Type H Reflective
   (Detour or temporary signs - Reflective)
   Message - Black
   MB3-1 thru MB3-4 Background - Blue
   Message - White - Type H Reflective
   (Detour or temporary signs - Reflective)
   MG3-1 thru MG3-4 Background - Green
   Message - White - Type H Reflective
   MK3-1 thru MK3-4 Background - Green
   Message - White - Type H Reflective
   MM3-1 thru MM3-4 Background - White - Type H Reflective
   Message - Green
   MN3-1 thru MN3-4 Background - Brown
   Message - White - Type H Reflective
   MO3-1 thru MO3-4 Background - Orange - Reflective
   Message - Black
6. Note the first letter of each direction is larger than the remainder of the message.

SIZE	A	B	C	D	E	F	G	H	I	J	K	L	M	N	O	P	Q	R	S	T	U	V	W	X	Y	Z	Area sq. ft.
1																											
2	24	12	1 1/8	3/8	3/8	6	7	2 1/4	2 3/4	10 1/4	7 7/8	8 3/8	10 1/4	9 3/4	8 3/4			1 1/2									2.00
3	36	18	1 1/8	3/8	1/2	9	10	3 3/4	4 1/4	14 3/8	12	12 1/8	14	14 1/8	13			1 1/2									4.5
4	36	18	1 1/8	3/8	1/2	9	10	3 3/4	4 1/4	14 3/8	12	12 1/8	14	14 1/8	13			1 1/2									4.5
5	36	18	1 1/8	3/8	1/2	9	10	3 3/4	4 1/4	14 3/8	12	12 1/8	14	14 1/8	13			1 1/2									4.5

STANDARD SIGNS
M3-1 thur M3-4
SERIES

WISCONSIN DEPT OF TRANSPORTATION

APPROVED Matthew R Rauch
for State Traffic Engineer

DATE 11/10/10 PLATE NO. M3-1.12

PROJECT NO: | HWY: | COUNTY: | SHEET NO: 160 | E

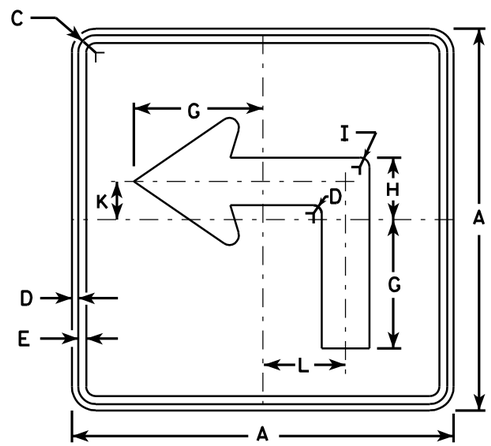

M5-1L
MK5-1L
MM5-1L
MO5-1L
MP5-1L
MR5-1L

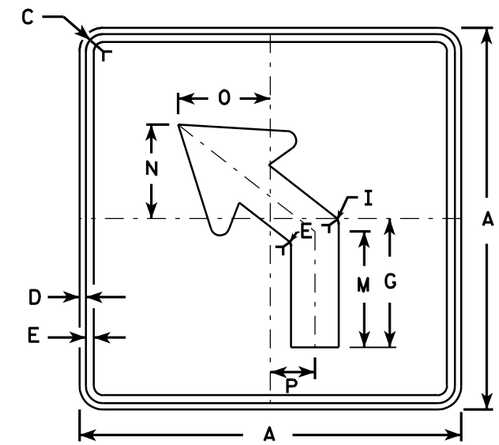

M5-2L
MK5-2L
MM5-2L
MO5-2L
MP5-2L
MR5-2L

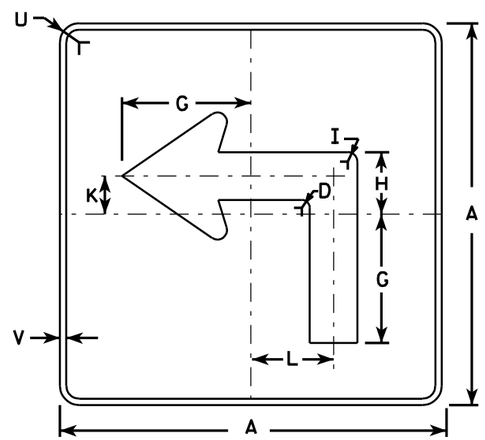

MB5-1L
MG5-1L
MN5-1L

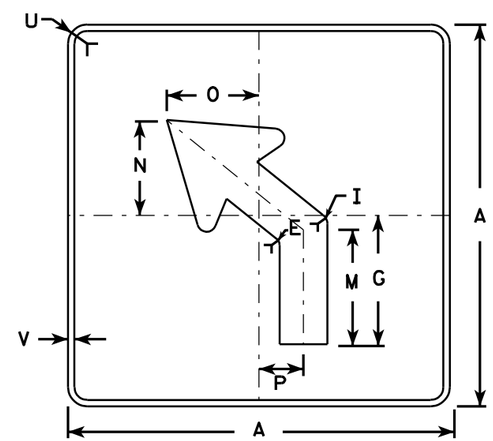

MB5-2L
MG5-2L
MN5-2L

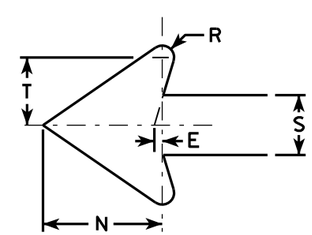

NOTES

1. Signs are Type II - See Note 4 - reference WIS DOT Standard Specification for HIGHWAY and STRUCTURE CONSTRUCTION latest edition.
2. Color:
   Background - See note 4
   Message - See note 4
3. Corners may be square or rounded when base material is plywood but borders shall be rounded as shown. When base material is metal, the corners and borders shall be rounded.
4. M5-1 and M5-2 Background - White - Type H Reflective
   Message - Black
   MB5-1 and MB5-2 Background - Blue
   Message - White - Type H Reflective
   MG5-1 and MG5-2 Background - Green
   Message - White - Type H Reflective
   MK5-1 and MK5-2 Background - Green
   Message - White Type H Reflective
   MM5-1 and MM5-2 Background - White - Type H Reflective
   Message - Green
   MN5-1 and MN5-2 Background - Brown
   Message - White - Type H Reflective
   MO5-1 and MO5-2 Background - Orange - Type F Reflective
   Message - Black
   MP5-1 and MP5-2 Background - White - Type H Reflective
   Message - Blue
   MR5-1 and MR5-2 Background - Brown
   Message - Yellow - Type H Reflective
5. M5-1R same as M5-1L except arrow points right.
6. M5-2R same as M5-2L except arrow tilts right.

SIZE	A	B	C	D	E	F	G	H	I	J	K	L	M	N	O	P	Q	R	S	T	U	V	W	X	Y	Z	Area sq. ft.
1																											
2	21		1 1/8	3/8	3/8		7	3 3/8	5/8		2 1/8	4 1/2	6 3/8	5 1/4	5	2 1/2		1/2	2 5/8	3	1 1/2	1/2					3.06
3	30		1 3/8	1/2	5/8		10 1/8	4 7/8	7/8		3	6 1/2	9 1/8	7 1/2	7 1/4	3 1/2		3/4	3 3/4	4 1/4	1 7/8	1/2					6.25
4	30		1 3/8	1/2	5/8		10 1/8	4 7/8	7/8		3	6 1/2	9 1/8	7 1/2	7 1/4	3 1/2		3/4	3 3/4	4 1/4	1 7/8	1/2					6.25
5	30		1 3/8	1/2	5/8		10 1/8	4 7/8	7/8		3	6 1/2	9 1/8	7 1/2	7 1/4	3 1/2		3/4	3 3/4	4 1/4	1 7/8	1/2					6.25

STANDARD SIGN
M5-1 & M5-2

WISCONSIN DEPT OF TRANSPORTATION

APPROVED Matthew R Rauch
for State Traffic Engineer

DATE 7/29/13 PLATE NO. M5-1.12

PROJECT NO: | HWY: | COUNTY: | SHEET NO: 161 | E

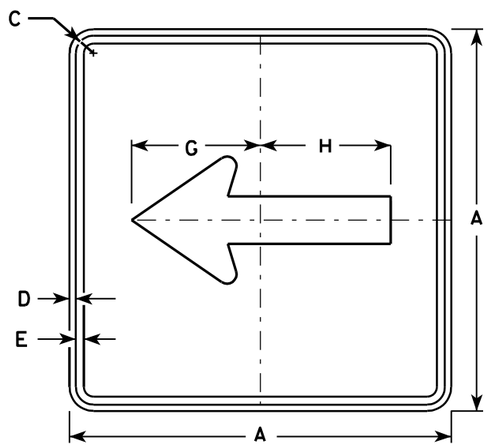

M6-1
MK6-1
MM6-1
MO6-1
MP6-1
MR6-1

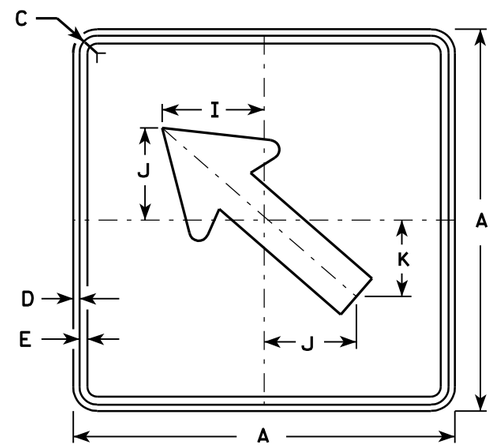

M6-2
MK6-2
MM6-2
MO6-2
MP6-2
MR6-2

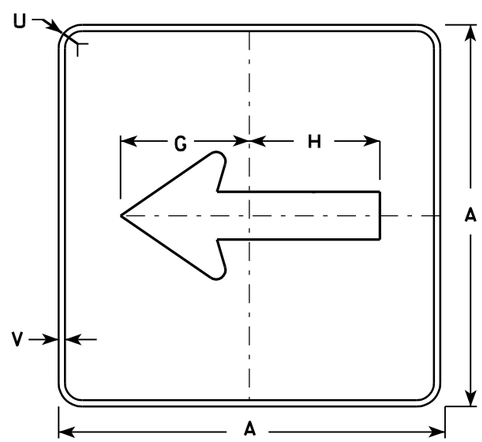

MB6-1
MG6-1
MN6-1

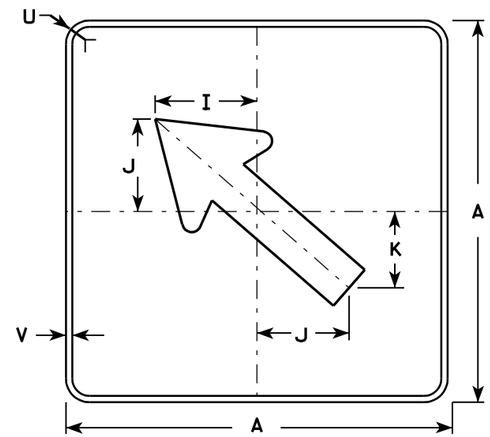

MB6-2
MG6-2
MN6-2

NOTES

1. Signs are Type II - See Note 4 - reference WIS DOT Standard Specification for HIGHWAY and STRUCTURE CONSTRUCTION latest edition.
2. Color:
   Background - See note 4
   Message - See note 4
3. Corners may be square or rounded when base material is plywood but borders shall be rounded as shown. When base material is metal, the corners and borders shall be rounded.
4. M6-1 and M6-2 Background - White - Type H Reflective
   Message - Black

   MB6-1 and MB6-2 Background - Blue
   Message - White - Type H Reflective

   MG6-1 and MG6-2 Background - Green
   Message - White - Type H Reflective

   MK6-1 and MK6-2 Background - Green
   Message - White - Type H Reflective

   MM6-1 and MM6-2 Background - White - Type H Reflective
   Message - Green

   MN6-1 and MN6-2 Background - Brown
   Message - White - Type H Reflective

   MO6-1 and MO6-2 Background - Orange - Type F Reflective
   Message - Black

   MP6-1 and MP6-2 Background - White - Type H Reflective
   Message - Blue

   MR6-1 and MR6-2 Background - Brown
   Message - Yellow - Type H Reflective

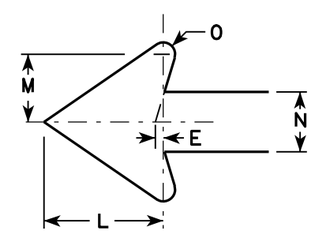

SIZE	A	B	C	D	E	F	G	H	I	J	K	L	M	N	O	P	Q	R	S	T	U	V	W	X	Y	Z	Area sq. ft.
1																											
2	21		1 1/8	3/8	3/8		7 1/2	7 1/8	5 5/8	5	4 1/4	5 1/4	3	2 5/8	1/2						1 1/2	1/2					3.06
3	30		1 3/8	1/2	5/8		10 3/4	10 1/4	8	7 1/4	6	7 1/2	4 1/4	3 3/4	3/4						1 7/8	1/2					6.25
4	30		1 3/8	1/2	5/8		10 3/4	10 1/4	8	7 1/4	6	7 1/2	4 1/4	3 3/4	3/4						1 7/8	1/2					6.25
5	30		1 3/8	1/2	5/8		10 3/4	10 1/4	8	7 1/4	6	7 1/2	4 1/4	3 3/4	3/4						1 7/8	1/2					6.25

STANDARD SIGN
M6-1 & M6-2
SERIES

WISCONSIN DEPT OF TRANSPORTATION

APPROVED Matthew R Rauch
for State Traffic Engineer

DATE 7/29/13 PLATE NO. M6-1.13

PROJECT NO: | HWY: | COUNTY: | SHEET NO: 162 | E

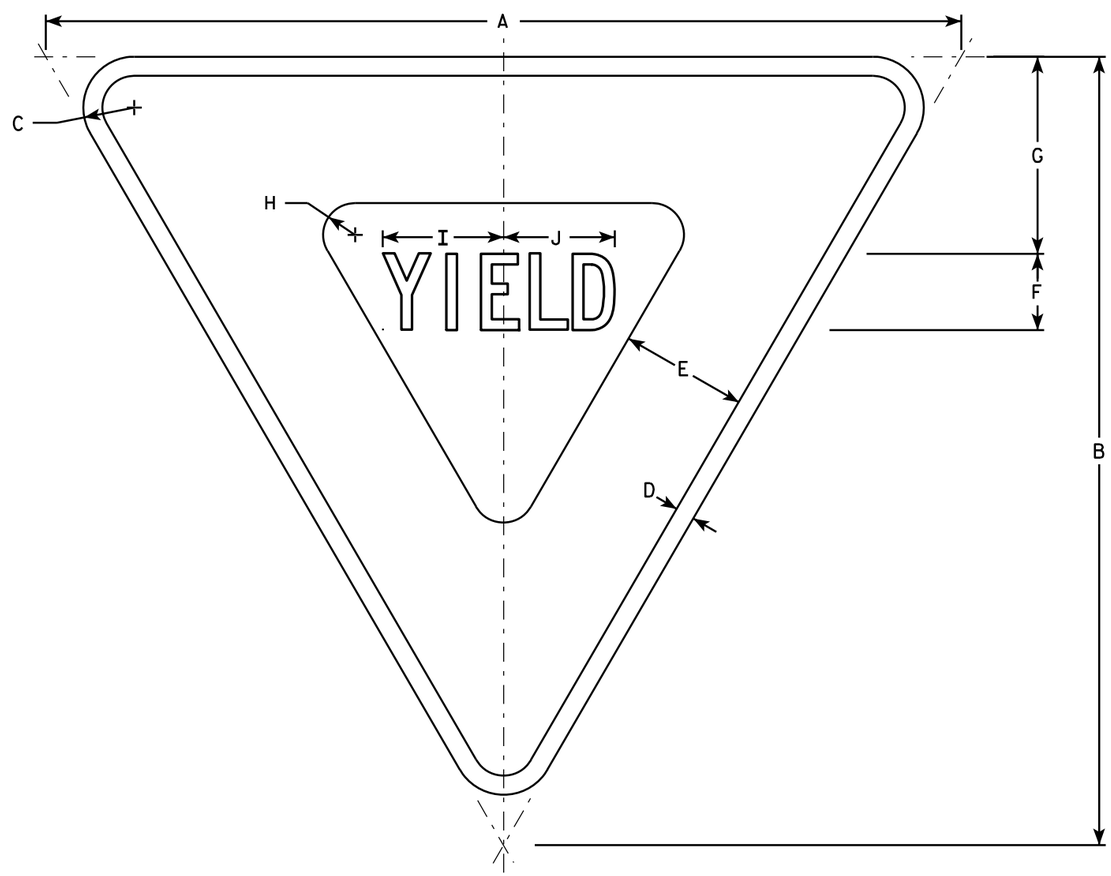

R1-2

NOTES

1. Sign is Type II - Type H Reflective - reference WIS DOT Standard Specification for HIGHWAY and STRUCTURE CONSTRUCTION latest edition.
2. Color:
   Background - White
   Message - See note 5
3. Message Series - C
4. Corners may be square or rounded when base material is plywood but borders shall be rounded as shown. When base material is metal, the corners and borders shall be rounded.
5. The border strip and word message are reflectorized red.

SIZE	A	B	C	D	E	F	G	H	I	J	K	L	M	N	O	P	Q	R	S	T	U	V	W	X	Y	Z	Area sq. ft.
1	30	26	1 1/2	5/8	4	2 1/2	6 3/8	7/8	4	3 5/8																	2.71
2S	36	31	2	3/4	5	3	7 3/4	1 1/4	4 3/4	4 3/8																	3.88
2M	48	42	3	1	6	4	9 3/4	2	6 1/4	5 7/8																	7.00
3	48	42	3	1	6	4	9 3/4	2	6 1/4	5 7/8																	7.00
4	48	42	3	1	6	4	9 3/4	2	6 1/4	5 7/8																	7.00
5	60	52	3	1 1/2	8	5	13	2 1/2	7 7/8	7 1/4																	10.83
6	24	21	1 1/2	3/8	3	2	4 3/4	7/8	3 1/4	3																	1.75
7	18	15 1/2	1	3/8	2 1/2	1 1/2	3 7/8	5/8	2 3/8	2 1/4																	0.97

STANDARD SIGN
R1-2

WISCONSIN DEPT OF TRANSPORTATION

APPROVED Matthew R Rauch
for State Traffic Engineer

DATE 11/02/10 PLATE NO. R1-2.11

PROJECT NO: | HWY: | COUNTY: | SHEET NO: 163 | E

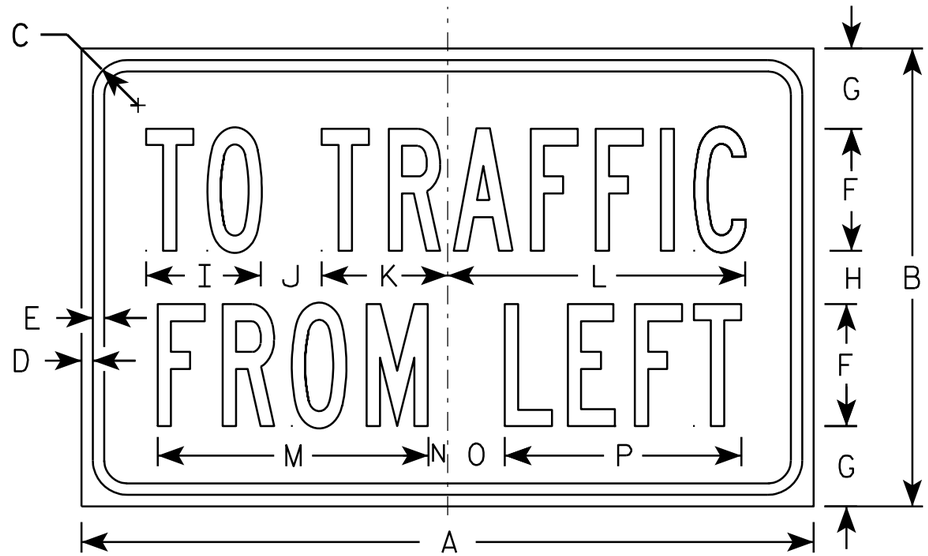

R1-54

NOTES

1. Sign is Type II - Type H Reflective - reference WIS DOT Standard Specification for HIGHWAY and STRUCTURE CONSTRUCTION latest edition.
2. Color:
   Background - White
   Message - Black
3. Message Series - B

SIZE	A	B	C	D	E	F	G	H	I	J	K	L	M	N	O	P	Q	R	S	T	U	V	W	X	Y	Z	Area sq. ft.
1																											
2S	24	15	1 1/8	3/8	3/8	4	2 5/8	1 3/4	3 3/4	2	4 1/8	9 3/4	8 7/8	5/8	1 7/8	7 3/4											2.5
2M	24	15	1 1/8	3/8	3/8	4	2 5/8	1 3/4	3 3/4	2	4 1/8	9 3/4	8 7/8	5/8	1 7/8	7 3/4											2.5
3																											
4																											
5																											

STANDARD SIGN
R1-54

WISCONSIN DEPT OF TRANSPORTATION

APPROVED Matthew R Rauch
for State Traffic Engineer

DATE 12/03/10 PLATE NO. R1-54.2

PROJECT NO:	HWY:	COUNTY:		SHEET NO: 164	E

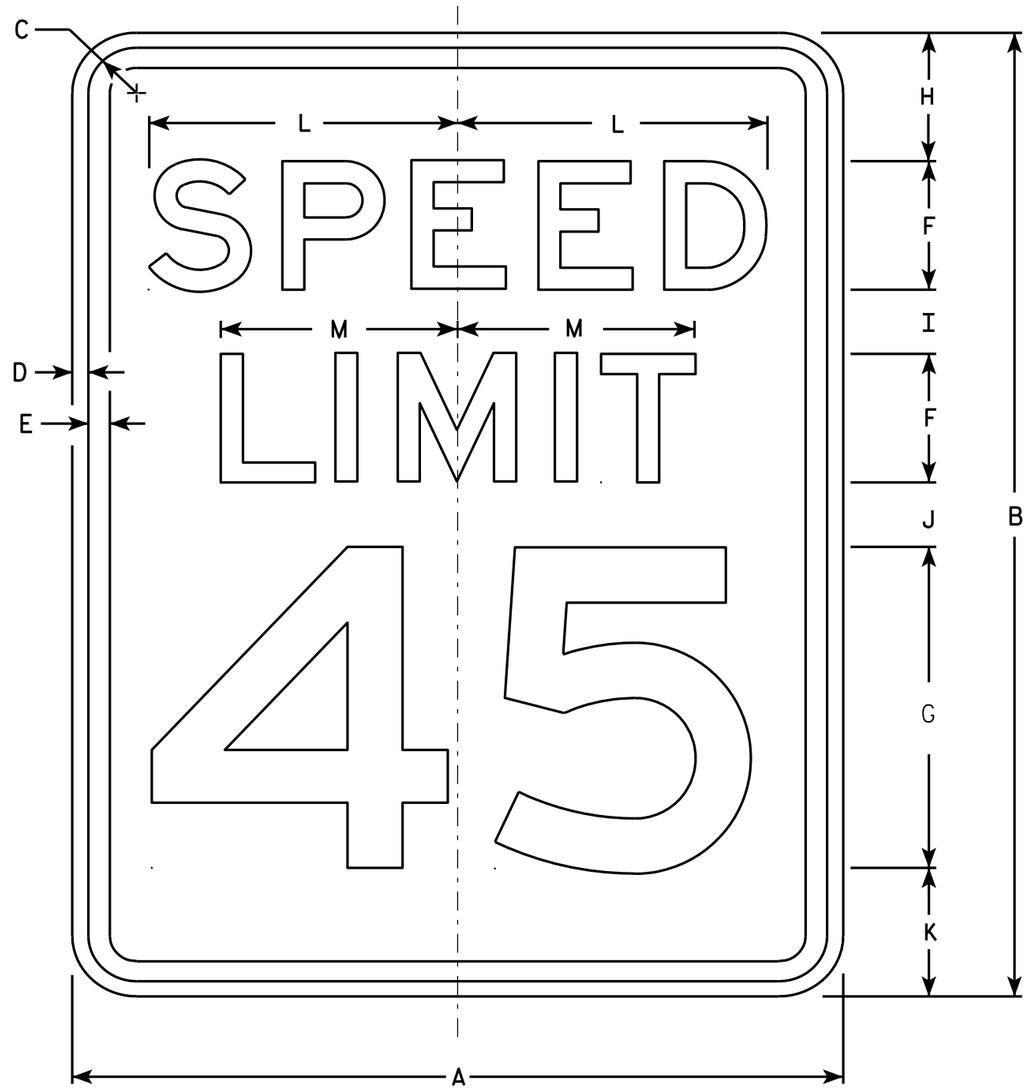

R2-1

NOTES

1. Sign is Type II - Type H Reflective - reference WIS DOT Standard Specification for HIGHWAY and STRUCTURE CONSTRUCTION latest edition.
2. Color:
   Background - White
   Message - Black
3. Message Series - E
4. Corners may be square or rounded when base material is plywood but borders shall be rounded as shown. When base material is metal, the corners and borders shall be rounded.
5. Substitute appropriate numerals and optically adjust spacing to achieve proper balance.

SIZE	A	B	C	D	E	F	G	H	I	J	K	L	M	N	O	P	Q	R	S	T	U	V	W	X	Y	Z	Area sq. ft.
1	18	24	1 1/8	3/8	1/2	3	8	3	2	2	3	7 1/4	5 1/2														3.0
2S	24	30	1 1/8	3/8	1/2	4	10	3	2 1/4	3 3/8	3 3/8	9 5/8	7 3/8														5.0
2M	30	36	1 3/8	1/2	5/8	5	12	5	2 1/2	2 1/2	4	12	9 1/4														7.5
3	36	48	1 3/8	1/2	5/8	6	14	6	5	5	6	14 3/8	11														12.0
4	36	48	1 3/8	1/2	5/8	6	14	6	5	5	6	14 3/8	11														12.0
5	48	60	2 1/4	3/4	1	8	20	6	4 1/2	6 3/4	6 3/4	19 1/4	14 5/8														20.0

STANDARD SIGN
R2-1

WISCONSIN DEPT OF TRANSPORTATION

APPROVED Matthew R Rauch
for State Traffic Engineer

DATE 5/26/10 PLATE NO. R2-1.13

PROJECT NO: | HWY: | COUNTY: | SHEET NO: 165 | E

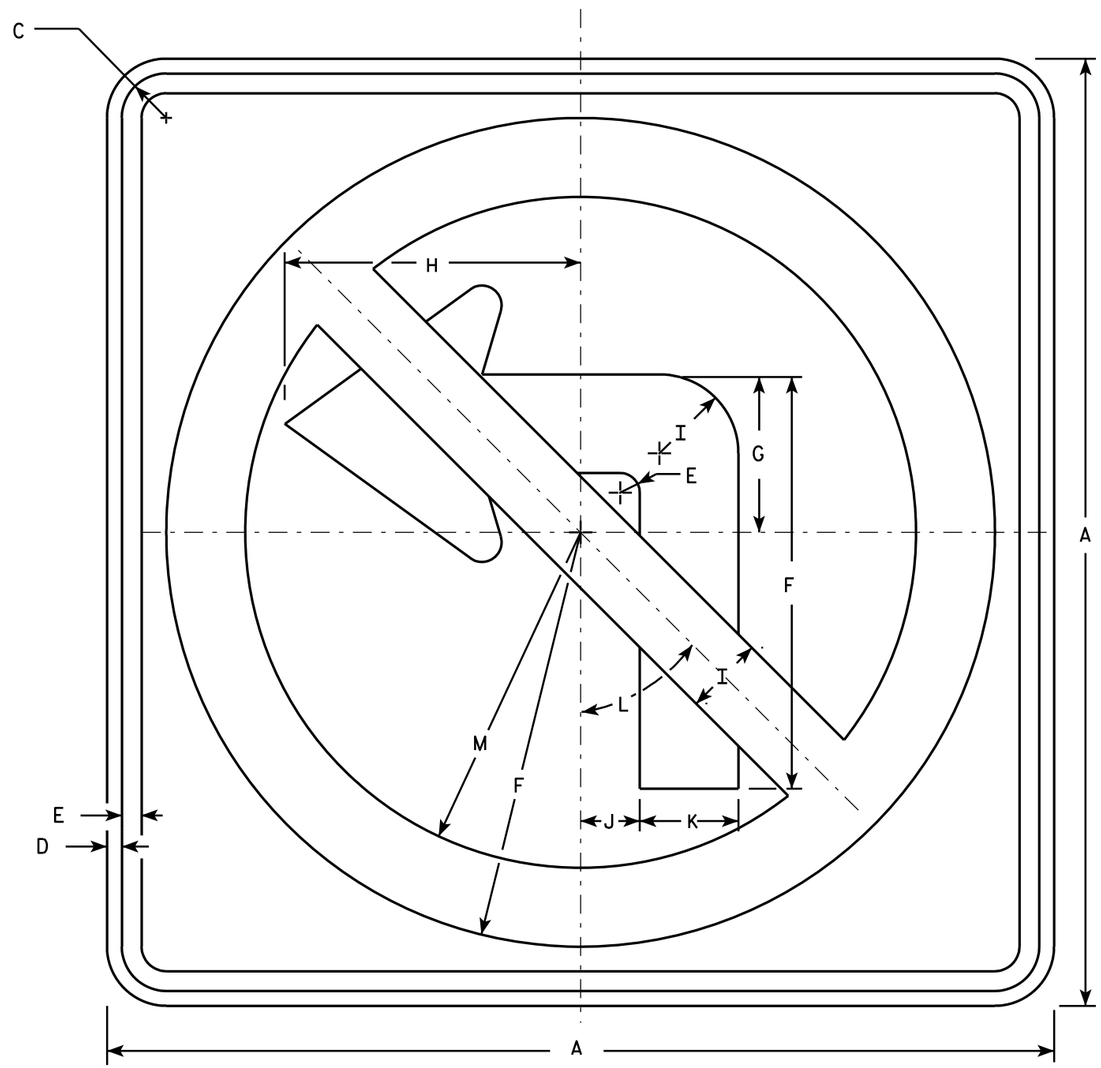

R3-2

NOTES

1. Sign is Type II - Type H Reflective - reference WIS DOT Standard Specification for HIGHWAY and STRUCTURE CONSTRUCTION latest edition.
2. Color:
   Background - White
   Message - See note 4
3. Corners may be square or rounded when base material is plywood but borders shall be rounded as shown. When base material is metal, the corners and borders shall be rounded.
4. Border & Arrow are non reflective black, the circle with diagonal bar is reflective red.

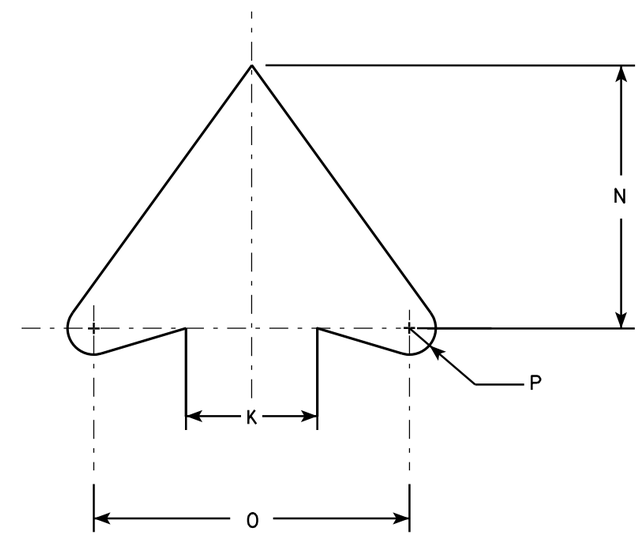

ARROW DETAIL

SIZE	A	B	C	D	E	F	G	H	I	J	K	L	M	N	O	P	Q	R	S	T	U	V	W	X	Y	Z	Area sq. ft.
1	24		1 1/8	3/8	1/2	10 1/2	4	7 1/2	2	1 1/2	2 1/2	45°	8 1/2	5	6	1/2											4.0
2S	24		1 1/8	3/8	1/2	10 1/2	4	7 1/2	2	1 1/2	2 1/2	45°	8 1/2	5	6	1/2											4.0
2M	36		1 5/8	5/8	3/4	15 3/4	6	11 1/4	3	2 1/4	3 3/4	45°	12 3/4	7 1/2	9	3/4											9.0
3	36		1 5/8	5/8	3/4	15 3/4	6	11 1/4	3	2 1/4	3 3/4	45°	12 3/4	7 1/2	9	3/4											9.0
4	36		1 5/8	5/8	3/4	15 3/4	6	11 1/4	3	2 1/4	3 3/4	45°	12 3/4	7 1/2	9	3/4											9.0
5	48		2 1/4	3/4	1	21	8	15	4	3	5	45°	17	10	12	1											16.0

STANDARD SIGN
R3-2

WISCONSIN DEPT OF TRANSPORTATION

APPROVED Matthew R Rauch
for State Traffic Engineer

DATE 12/08/10 PLATE NO. R3-2.10

PROJECT NO:	HWY:	COUNTY:		SHEET NO: 166	E

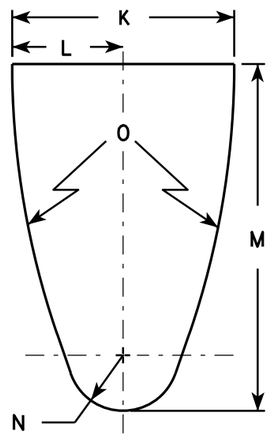

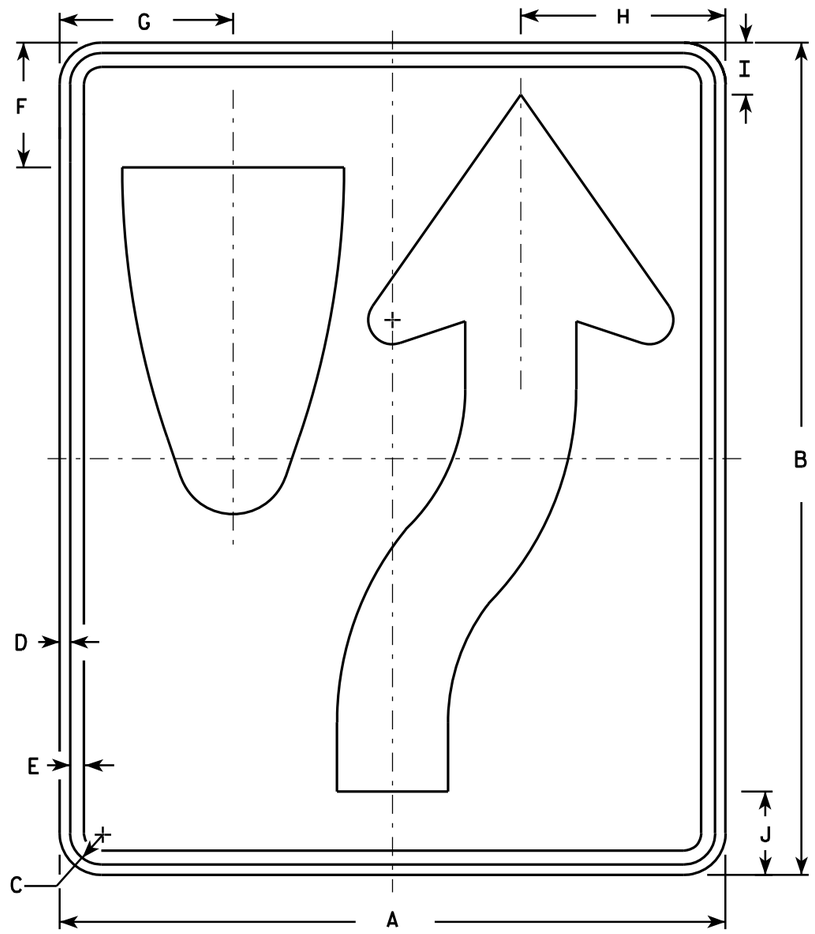

R4-7

NOTES

1. Sign is Type II - Type H Reflective - reference WIS DOT Standard Specification for HIGHWAY and STRUCTURE CONSTRUCTION latest edition. material is plywood but borders shall be rounded
2. Color:
   Background - White
   Message - Black
3. Corners may be square or rounded when base as shown. When base material is metal, the corners and borders shall be rounded.
4. R4-8 is the same as R4-7 except Legend is reversed.

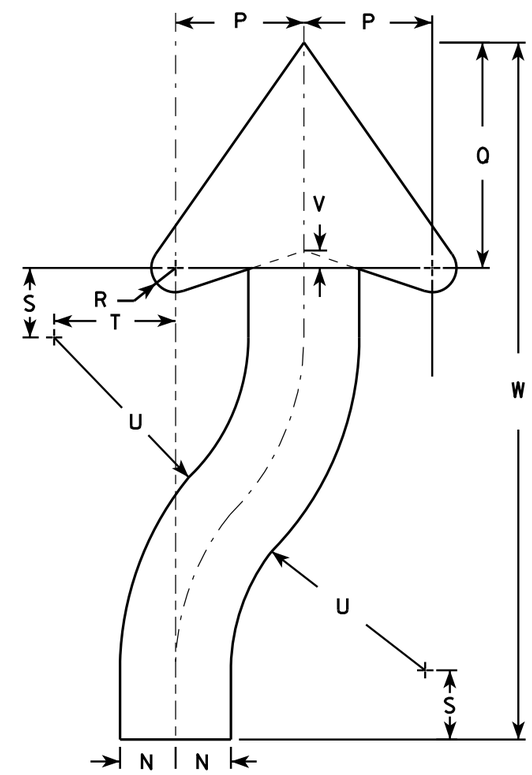

ARROW DETAIL

SIZE	A	B	C	D	E	F	G	H	I	J	K	L	M	N	O	P	Q	R	S	T	U	V	W	X	Y	Z	Area sq. ft.
1	18	24	1 1/8	3/8	1/2	3 3/8	4 3/4	5 1/2	1 3/8	2 1/4	6	3	9 3/8	1 1/2	22 1/2	3 1/2	6 1/8	5/8	1 7/8	3 1/4	6 3/4	1/2	20 3/8				3.0
2S	24	30	1 1/8	3/8	1/2	4 1/2	6 1/4	7 3/8	1 7/8	3	8	4	12 1/2	2	30	4 5/8	8 1/8	7/8	2 1/2	4 3/8	9	5/8	25 1/8				5.0
2M	24	30	1 1/8	3/8	1/2	4 1/2	6 1/4	7 3/8	1 7/8	3	8	4	12 1/2	2	30	4 5/8	8 1/8	7/8	2 1/2	4 3/8	9	5/8	25 1/8				5.0
3	36	48	1 3/4	1/2	5/8	6 3/4	9 3/8	11 1/8	2 7/8	4 1/2	12	6	18 3/4	3	45	6 7/8	12 1/4	1 1/4	3 3/4	6 5/8	13 1/2	1	40 3/4				12.0
4	36	48	1 3/4	1/2	5/8	6 3/4	9 3/8	11 1/8	2 7/8	4 1/2	12	6	18 3/4	3	45	6 7/8	12 1/4	1 1/4	3 3/4	6 5/8	13 1/2	1	40 3/4				12.0
5	48	60	2 1/4	3/4	1	9	12 1/2	14 3/4	3 3/4	6	16	8	25	4	60	9 1/4	16 1/4	1 5/8	5	8 3/4	18	1 1/4	50 1/4				20.0

STANDARD SIGN
R4-7 & R4-8

WISCONSIN DEPT OF TRANSPORTATION

APPROVED Matthew R Rauch for State Traffic Engineer

DATE 3/25/2011 PLATE NO. R4-7.8

PROJECT NO:	HWY:	COUNTY:		SHEET NO: 167	E

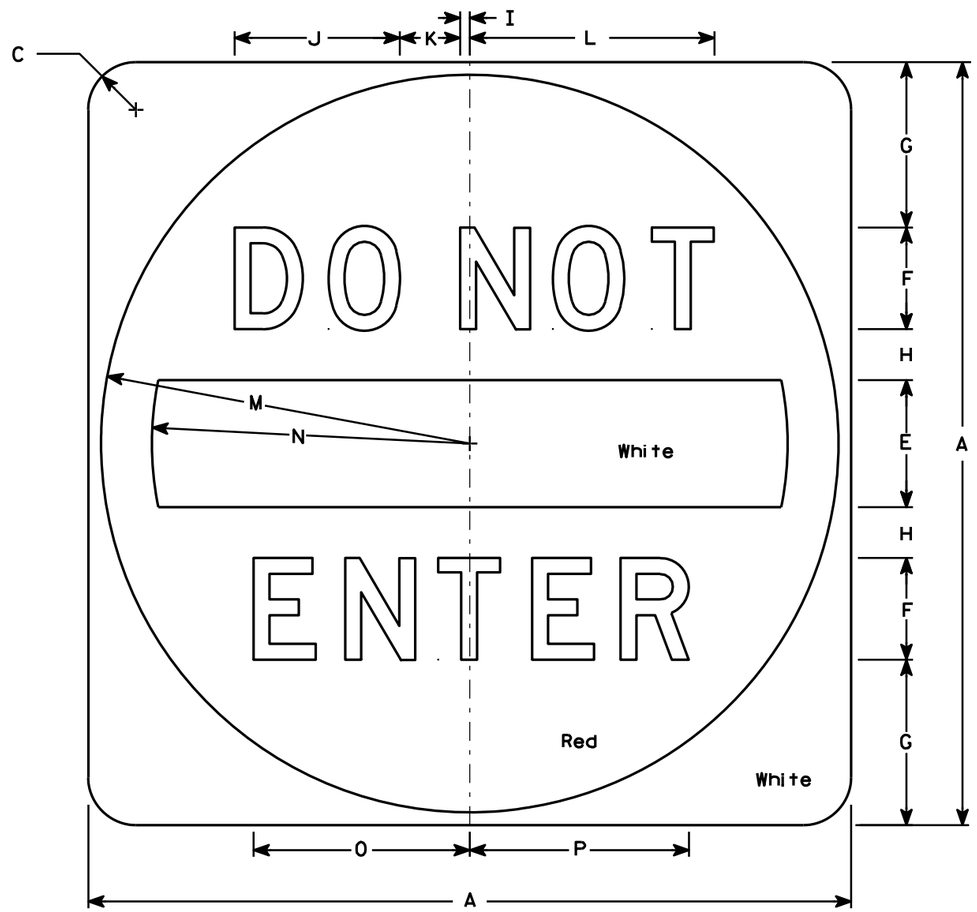

R5-1

NOTES

1. Sign is Type II - Type H Reflective - reference WIS DOT Standard Specification for HIGHWAY and STRUCTURE CONSTRUCTION latest edition.
2. Color:
   Background - See detail
   Message - White - Type H Reflective
3. Message Series - D
4. Corners may be square or rounded when base material is plywood but when base material is metal, the cornors shall be rounded.

SIZE	A	B	C	D	E	F	G	H	I	J	K	L	M	N	O	P	Q	R	S	T	U	V	W	X	Y	Z	Area sq. ft.
1																											
2S	30		1 7/8		5	4	6 1/2	2	3/8	6 1/2	2 3/8	9 5/8	14 1/2	12 1/2	8 1/2	8 5/8											6.26
2M	36		2 1/4		6	5	7 1/2	2 1/2	1/2	8 1/8	3	12 1/8	17 1/2	15	10 5/8	10 3/4											9.0
3	36		2 1/4		6	5	7 1/2	2 1/2	1/2	8 1/8	3	12 1/8	17 1/2	15	10 5/8	10 3/4											9.0
4	36		2 1/4		6	5	7 1/2	2 1/2	1/2	8 1/8	3	12 1/8	17 1/2	15	10 5/8	10 3/4											9.0
5	48		3		8	6	11	3	5/8	9 3/4	3 5/8	14 1/2	23 1/2	20	12 3/4	12 7/8											16.0

STANDARD SIGN
R5-1

WISCONSIN DEPT OF TRANSPORTATION

APPROVED Matthew R Rauch
for State Traffic Engineer

DATE 12/17/10 PLATE NO. R5-1.15

PROJECT NO: | HWY: | COUNTY: | SHEET NO: 168 | E

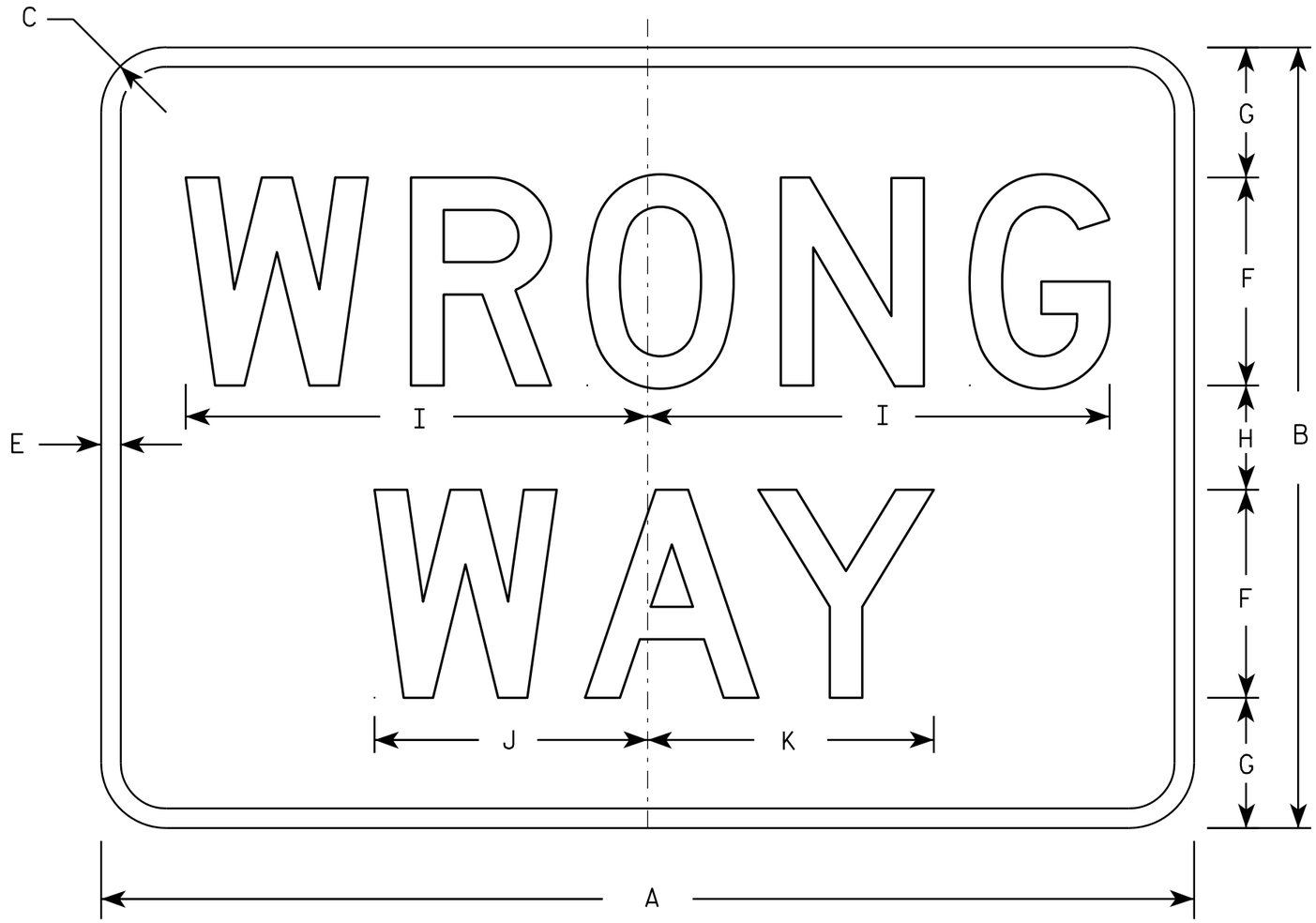

R5-1A

NOTES

1. Sign is Type II - Type H Reflective - reference WIS DOT Standard Specification for HIGHWAY and STRUCTURE CONSTRUCTION latest edition.
2. Color:
   Background - Red
   Message - White
3. Message Series - D
4. Corners may be square or rounded when base material is plywood but borders shall be rounded as shown. When base material is metal, the corners and borders shall be rounded.

SIZE	A	B	C	D	E	F	G	H	I	J	K	L	M	N	O	P	Q	R	S	T	U	V	W	X	Y	Z	Area sq. ft.
1	30	18	1 1/2		1/2	5	3	2	11	6 1/2	6 7/8																3.75
2S	36	24	2		5/8	6	4 1/2	3	13 1/4	7 7/8	8 1/4																6.00
2M	42	30	2 1/2		3/4	8	5	4	17 3/4	10 1/2	11																8.75
3	42	30	2 1/2		3/4	8	5	4	17 3/4	10 1/2	11																8.75
4	42	30	2 1/2		3/4	8	5	4	17 3/4	10 1/2	11																8.75
5	42	30	2 1/2		3/4	8	5	4	17 3/4	10 1/2	11																8.75

STANDARD SIGN
R5-1A

WISCONSIN DEPT OF TRANSPORTATION

APPROVED Matthew R Rauch
for State Traffic Engineer

DATE 12/17/10 PLATE NO. R5-1A.2

PROJECT NO: | HWY: | COUNTY: | SHEET NO: 169 | E

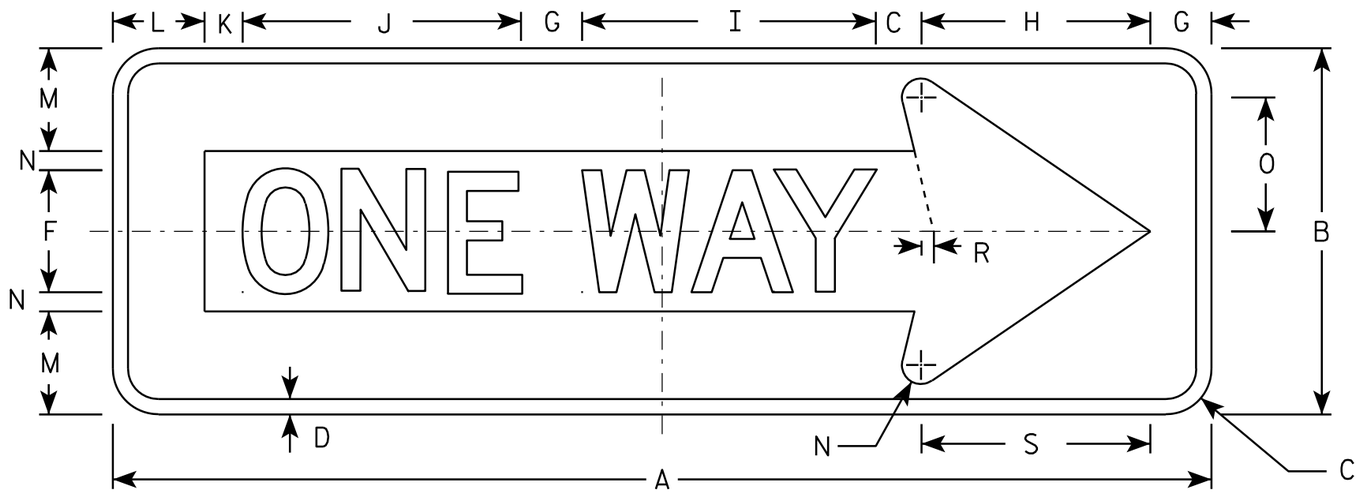

R6-1 R

NOTES

1. Sign is Type II - Type H Reflective - reference WIS DOT Standard Specification for HIGHWAY and STRUCTURE CONSTRUCTION latest edition.
2. Color:
   Background - BLACK
   Message - BLACK LEGEND & WHITE ARROW & BORDER
3. Message Series - D
4. Corners may be square or rounded when base material is plywood but borders shall be rounded as shown. When base material is metal, the corners and borders shall be rounded.

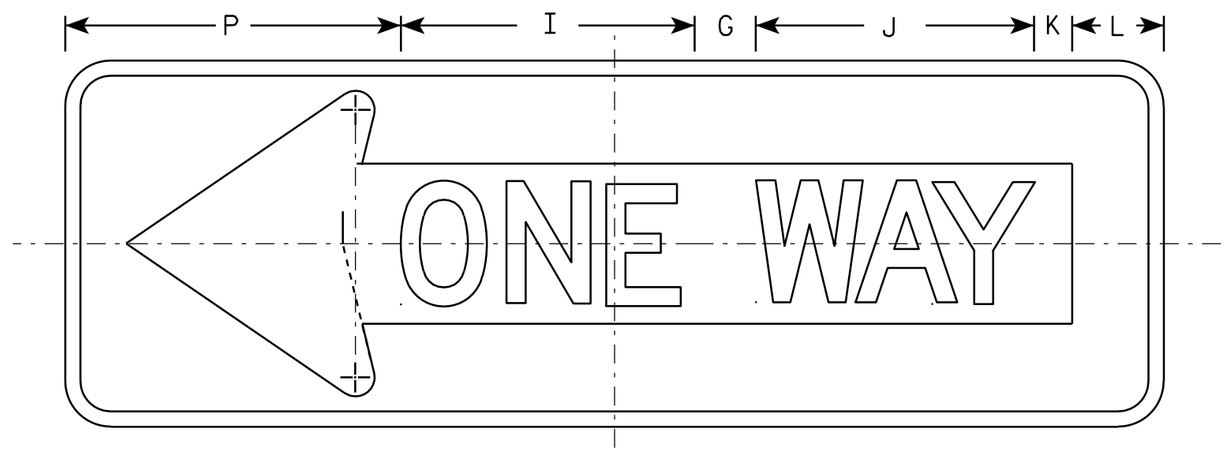

R6-1 L

SIZE	A	B	C	D	E	F	G	H	I	J	K	L	M	N	O	P	Q	R	S	T	U	V	W	X	Y	Z	Area sq. ft.
1																											
2S	36	12	1 1/2	1/2		4	2	7 1/2	9 5/8	9 1/8	1 1/4	3	3 3/8	5/8	4 3/8	11		3/8	7 1/2								3.0
2M	54	18	2 1/4	3/4		6	3	11 1/4	14 1/2	13 5/8	1 7/8	4 1/2	5	1	6 1/2	16 1/2		5/8	11 1/4								6.75
3	54	18	2 1/4	3/4		6	3	11 1/4	14 1/2	13 5/8	1 7/8	4 1/2	5	1	6 1/2	16 1/2		5/8	11 1/4								6.75
4	54	18	2 1/4	3/4		6	3	11 1/4	14 1/2	13 5/8	1 7/8	4 1/2	5	1	6 1/2	16 1/2		5/8	11 1/4								6.75
5																											

STANDARD SIGN
R6-1 L & R

WISCONSIN DEPT OF TRANSPORTATION

APPROVED Matthew R Rauch
for State Traffic Engineer

DATE 12/17/10 PLATE NO. R6-1.2

PROJECT NO:

SHEET NO: 170 E

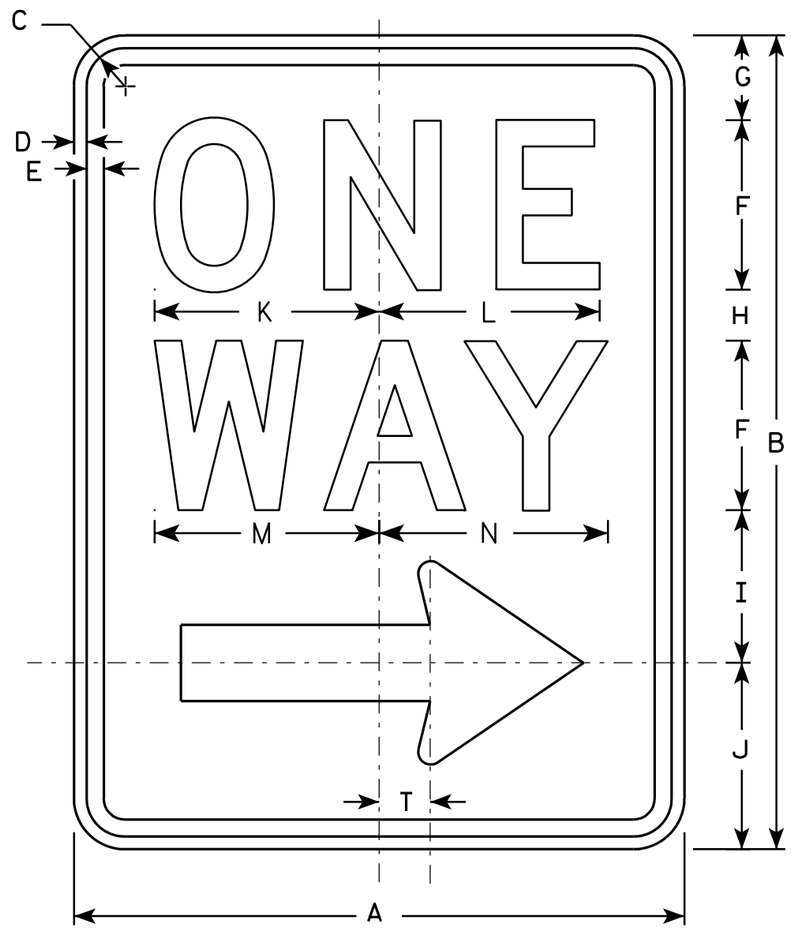

R6-2R

NOTES

1. Sign is Type II - Type H Reflective - reference WIS DOT Standard Specification for HIGHWAY and STRUCTURE CONSTRUCTION latest edition.
2. Color:
   Background - White
   Message - Black
3. Message Series - D
4. Corners may be square or rounded when base material is plywood but borders shall be rounded as shown. When base material is metal, the corners and borders shall be rounded.
5. R6-2L same as R6-2R except arrow points to the left.

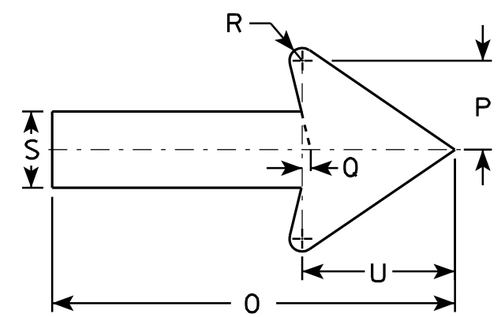

SIZE	A	B	C	D	E	F	G	H	I	J	K	L	M	N	O	P	Q	R	S	T	U	V	W	X	Y	Z
1	18	24	1 1/8	3/8	1/2	5	2 1/2	1 1/2	4 1/2	5 1/2	6 5/8	6 1/2	6 5/8	6 3/4	11 7/8	2 5/8	1/4	3/8	2 1/4	1 1/2	4 1/2					
2S	24	30	1 1/8	3/8	1/2	6	3	2 1/2	5 1/2	7	8 1/8	8 1/8	8 1/2	8 5/8	16	3 1/2	3/8	1/2	3	2	6					
2M	30	36	1 3/8	1/2	5/8	8	2 1/2	2 5/8	6 7/8	8	10 1/2	10 1/2	11 1/4	11 1/4	20	4 3/8	1/2	5/8	3 3/4	2 1/2	7 1/2					
3	36	48	1 7/8	1/2	5/8	10	5 1/4	3 1/4	9	10 1/2	12 3/4	12 3/4	13 1/4	13 1/2	24	5 5/8	1/2	3/4	4 3/4	3	9					
4	36	48	1 7/8	1/2	5/8	10	5 1/4	3 1/4	9	10 1/2	12 3/4	12 3/4	13 1/4	13 1/2	24	5 5/8	1/2	3/4	4 3/4	3	9					
5																										

STANDARD SIGN
R6-2 R&L

WISCONSIN DEPT OF TRANSPORTATION

APPROVED Matthew R Rauch
for State Traffic Engineer

DATE 11/2/10 PLATE NO. R6-2.8

PROJECT NO:	HWY:	COUNTY:		SHEET NO: 171	E

NOTES

1. Sign is Type II - Type H Reflective - reference WIS DOT Standard Specification for HIGHWAY and STRUCTURE CONSTRUCTION latest edition.
2. Color:
   Background - WHITE
   Message - BLACK
3. Corners may be square or rounded when base material is plywood but borders shall be rounded as shown. When base material is metal, the corners and borders shall be rounded.

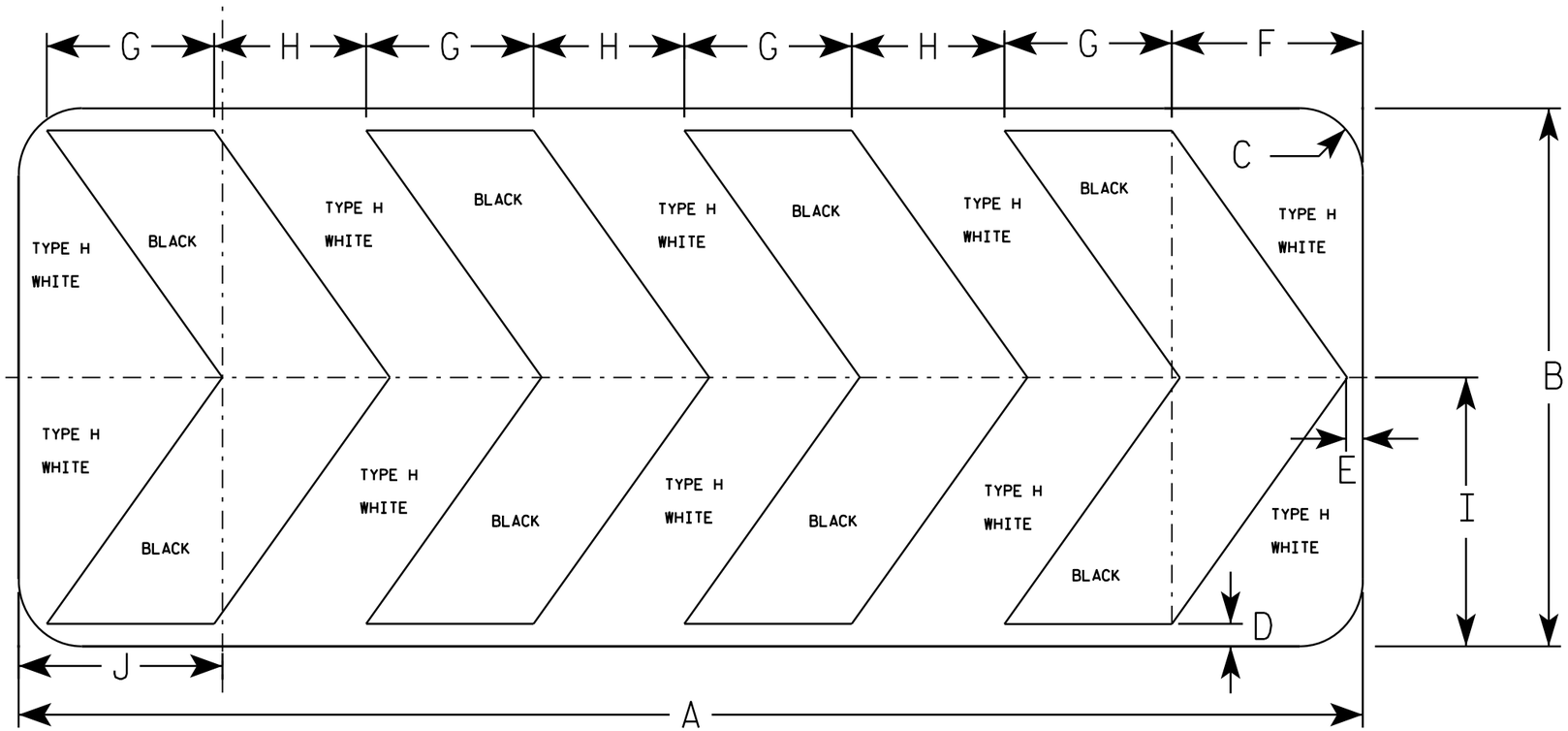

R6-4B

SIZE	A	B	C	D	E	F	G	H	I	J	K	L	M	N	O	P	Q	R	S	T	U	V	W	X	Y	Z	Area sq. ft.
1																											
2S	60	24	2 1/4	1	3/4	8 1/2	7 1/2	6 3/4	12	9 1/8																	10.0
2M	60	24	2 1/4	1	3/4	8 1/2	7 1/2	6 3/4	12	9 1/8																	10.0
3																											
4																											
5																											

STANDARD SIGN
R6-4B

WISCONSIN DEPT OF TRANSPORTATION

APPROVED Matthew R Rauch
for State Traffic Engineer

DATE 1/03/11 PLATE NO. R6-4B.2

PROJECT NO:

SHEET NO: 172 E

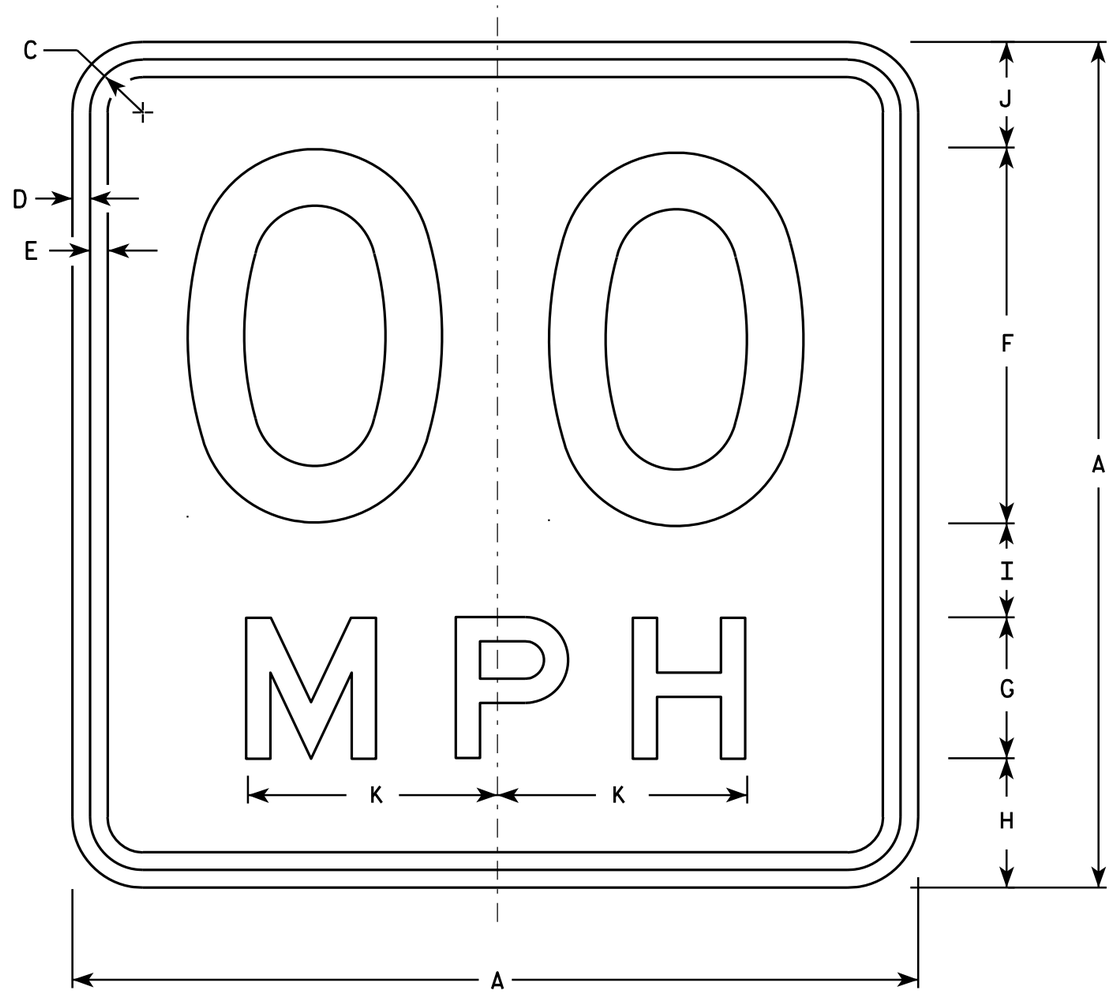

W13-1

* For 30" x 30" Warning Signs, use 18" x 18" W13-1 signs.
For 36" x 36" Warning Signs, use 24" x 24" W13-1 signs.

NOTES

1. Sign is Type II - Type F Reflective - reference WIS DOT Standard Specification for HIGHWAY and STRUCTURE CONSTRUCTION latest edition.
2. Color:
   Background - Yellow
   Message - Black
3. Message Series - See Note 6
4. Corners may be square or rounded when base material is plywood but borders shall be rounded as shown. When base material is metal, the corners and borders shall be rounded.
5. Substitute appropriate numerals and optically space about centerline to achieve proper balance.
6. Line 1 is Series D
   Line 2 is Series E

SIZE	A	B	C	D	E	F	G	H	I	J	K	L	M	N	O	P	Q	R	S	T	U	V	W	X	Y	Z	Area sq. ft.
1	18		1 1/8	3/8	3/8	8	3	2 3/4	2	2 1/4	5 3/8																2.25
* 2S	18		1 1/8	3/8	3/8	8	3	2 3/4	2	2 1/4	5 3/8																2.25
* 2M	18		1 1/8	3/8	3/8	8	3	2 3/4	2	2 1/4	5 3/8																2.25
3	24		1 1/8	3/8	1/2	10	4	4	2 3/4	3 1/4	6 5/8																4.00
4	36		1 5/8	5/8	3/4	16	6	5 1/2	4	4 1/2	10 5/8																9.00
5	36		1 5/8	5/8	3/4	16	6	5 1/2	4	4 1/2	10 5/8																9.00

STANDARD SIGN
W13-1

WISCONSIN DEPT OF TRANSPORTATION

APPROVED Matthew R Rauch
For State Traffic Engineer

DATE 5/31/12 PLATE NO. W13-1.16

PROJECT NO: | HWY: | COUNTY: | SHEET NO: 173 | E

NOTES

1. Sign is Type II - Type F Reflective - reference WIS DOT Standard Specification for HIGHWAY and STRUCTURE CONSTRUCTION latest edition.
2. Color:
   Background - Yellow
   Message - Black
3. Message Series - See note 5
4. Corners and borders shall be rounded on all base materials for this sign.
5. Lines 1 and 2 are Series D.
   Line 3 is series C.

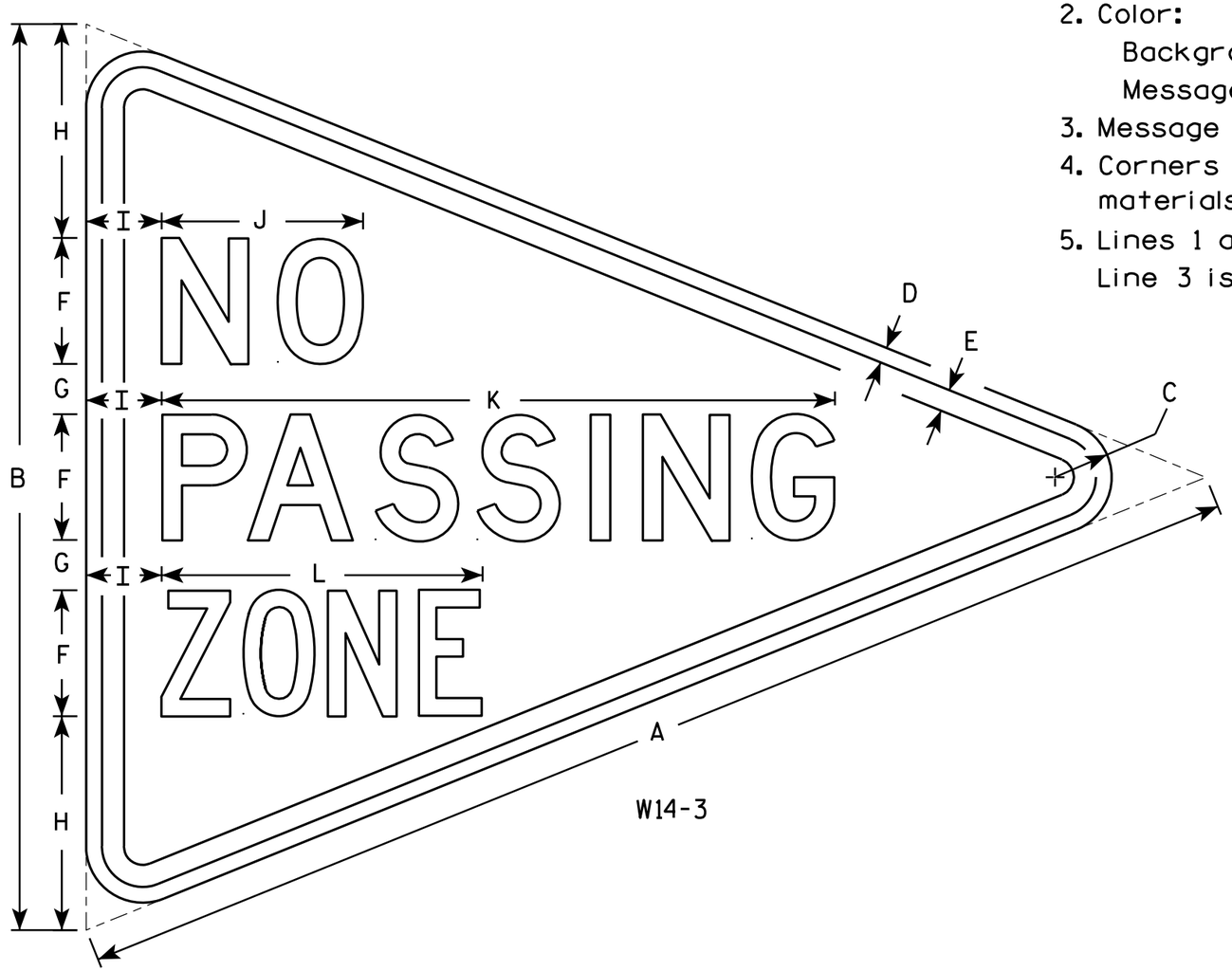

W14-3

SIZE	A	B	C	D	E	F	G	H	I	J	K	L	M	N	O	P	Q	R	S	T	U	V	W	X	Y	Z	Area sq. ft.
1																											
2S	48	36	2 1/4	5/8	7/8	5	2	8 1/2	3	8	26 3/4	12 3/4															6.0
2M	48	36	2 1/4	5/8	7/8	5	2	8 1/2	3	8	26 3/4	12 3/4															6.0
3	64	48	3	3/4	1 1/4	6	3	12	4	10 3/4	33 5/8	16 1/2															10.7
4																											
5																											

STANDARD SIGN
W14-3

WISCONSIN DEPT OF TRANSPORTATION

APPROVED Matthew R Rauch
for State Traffic Engineer
DATE 6/7/10 PLATE NO. W14-3.9

PROJECT NO: | HWY: | COUNTY: | SHEET NO: 174 | E

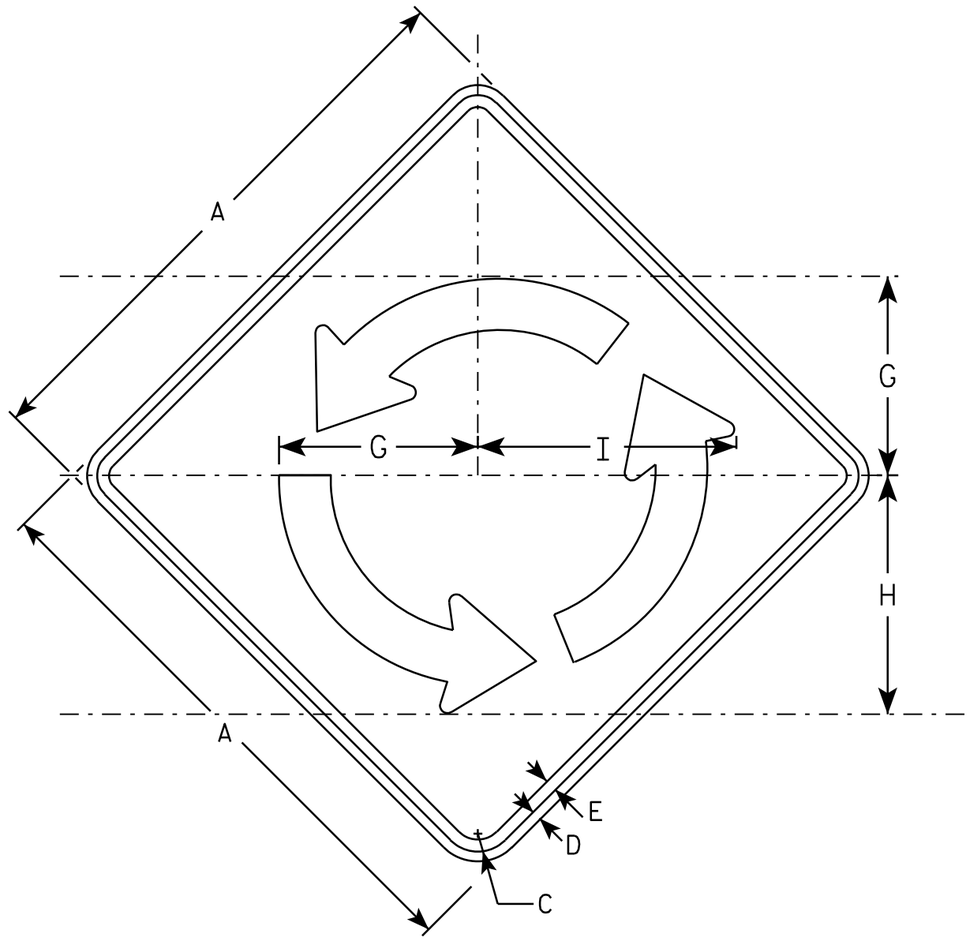

W2-6

NOTES

1. Sign is Type II - Type F Reflective - reference WIS DOT Standard Specification for HIGHWAY and STRUCTURE CONSTRUCTION latest edition.
2. Color:
   Background - YELLOW
   Message - BLACK
3. Message Series - B
4. Corners may be square or rounded when base material is plywood but borders shall be rounded as shown. When base material is metal, the corners and borders shall be rounded.

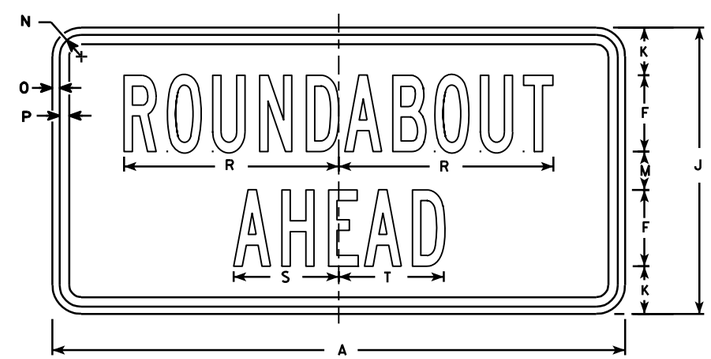

W2-6P

SIZE	A	B	C	D	E	F	G	H	I	J	K	L	M	N	O	P	Q	R	S	T	U	V	W	X	W2-6 Area sq. ft.	W2-6P Area sq. ft.
1																										
2S	30		1 3/8	1/2	5/8	4	10 3/8	12 1/2	13 1/2	15	2 1/2		2	1 1/8	3/8	1/2		11 1/4	5 1/2	5 1/2					6.25	3.12
2M	30		1 3/8	1/2	5/8	4	10 3/8	12 1/2	13 1/2	15	2 1/2		2	1 1/8	3/8	1/2		11 1/4	5 1/2	5 1/2					6.25	3.12
3	36		1 5/8	5/8	3/4	5	12 1/2	15	16 1/4	18	2 5/8		2 3/4	1 1/8	3/8	1/2		14	7	6 3/4					9.00	4.50
4	48		2 1/4	3/4	1	6	16 5/8	20	16 1/4	24	4 3/8		3 5/8	1 3/8	1/2	5/8		17	8 1/4	8 1/4					16.0	8.0
5																										

STANDARD SIGN
W2-6

WISCONSIN DEPT OF TRANSPORTATION

APPROVED Matthew R Rauch
for State Traffic Engineer

DATE 6/29/12 PLATE NO. W2-6.5

PROJECT NO:

SHEET NO: 175 E

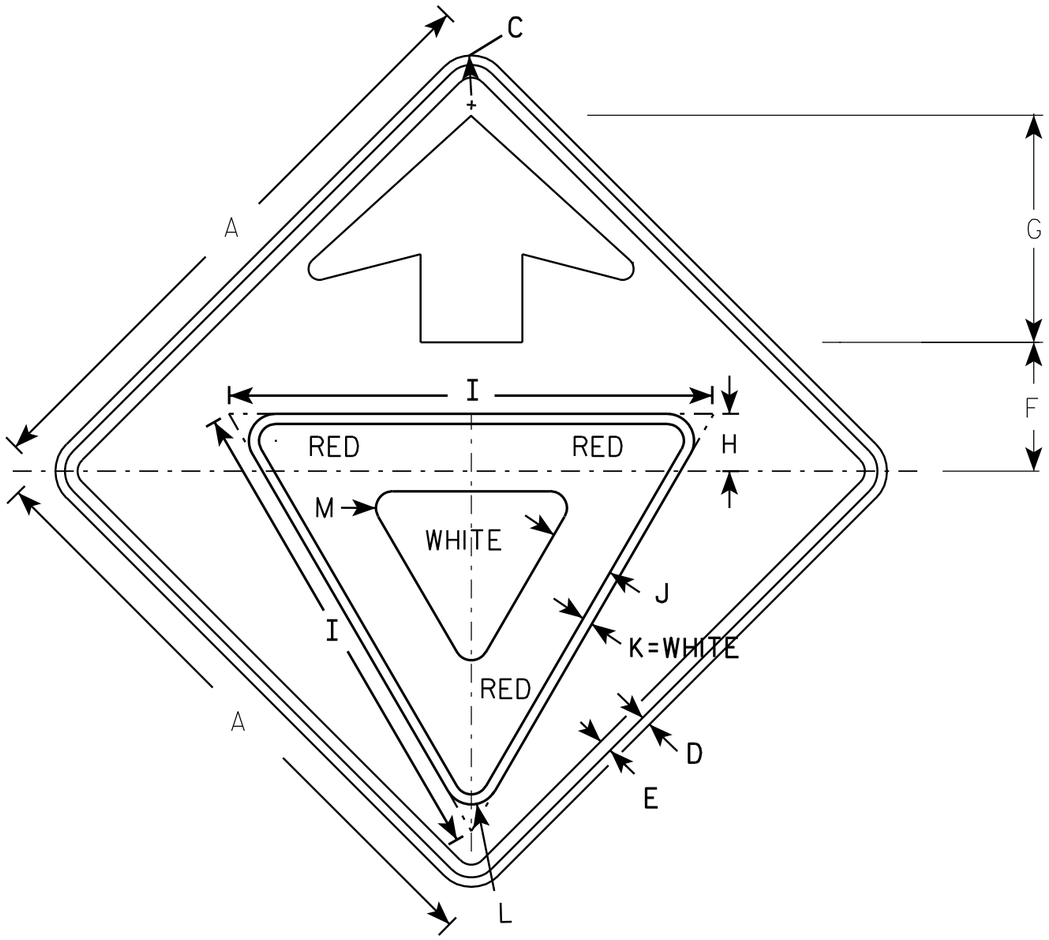

W3-2

NOTES

1. All Signs Type II - Type F Reflective - reference WIS DOT Standard Specification for HIGHWAY and STRUCTURE CONSTRUCTION latest edition.
2. Color:
   - Background - YELLOW
   - Arrow & Border - BLACK
   - Yield Symbol - WHITE BORDER ON RED BACKGROUND

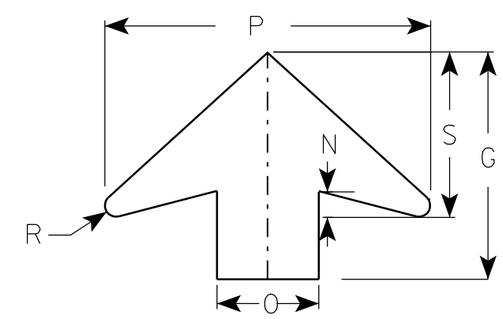

ARROW DETAIL

SIZE	A	B	C	D	E	F	G	H	I	J	K	L	M	N	O	P	Q	R	S	T	U	V	W	X	Y	Z	Area sq. ft.
1	30		1 3/8	1/2	5/8	6 1/4	11 1/4	3	25	3 3/8	1/2	1 3/8	7/8	1 1/4	5	16		1/2	8								6.25
2S	36		1 5/8	5/8	3/4	7 1/2	13 1/2	3 3/8	28	3 3/4	5/8	1 1/2	1	1 5/8	6	19 1/4		5/8	9 3/4								9.0
2M	36		1 5/8	5/8	3/4	7 1/2	13 1/2	3 3/8	28	3 3/4	5/8	1 1/2	1	1 5/8	6	19 1/4		5/8	9 3/4								9.0
3	36		1 5/8	5/8	3/4	7 1/2	13 1/2	3 3/8	28	3 3/4	5/8	1 1/2	1	1 5/8	6	19 1/4		5/8	9 3/4								9.0
4	48		2 1/4	3/4	1	10	17 7/8	4 1/2	38	5	3/4	2 1/8	1 3/8	2	8	25 5/8		7/8	13								16.0
5	48		2 1/4	3/4	1	10	17 7/8	4 1/2	38	5	3/4	2 1/8	1 3/8	2	8	25 5/8		7/8	13								16.0

STANDARD SIGN
W3-2

WISCONSIN DEPT OF TRANSPORTATION

APPROVED Matthew R Rauch
for State Traffic Engineer

DATE 6/7/10 PLATE NO. W3-2..9

PROJECT NO:

SHEET NO: 176 E

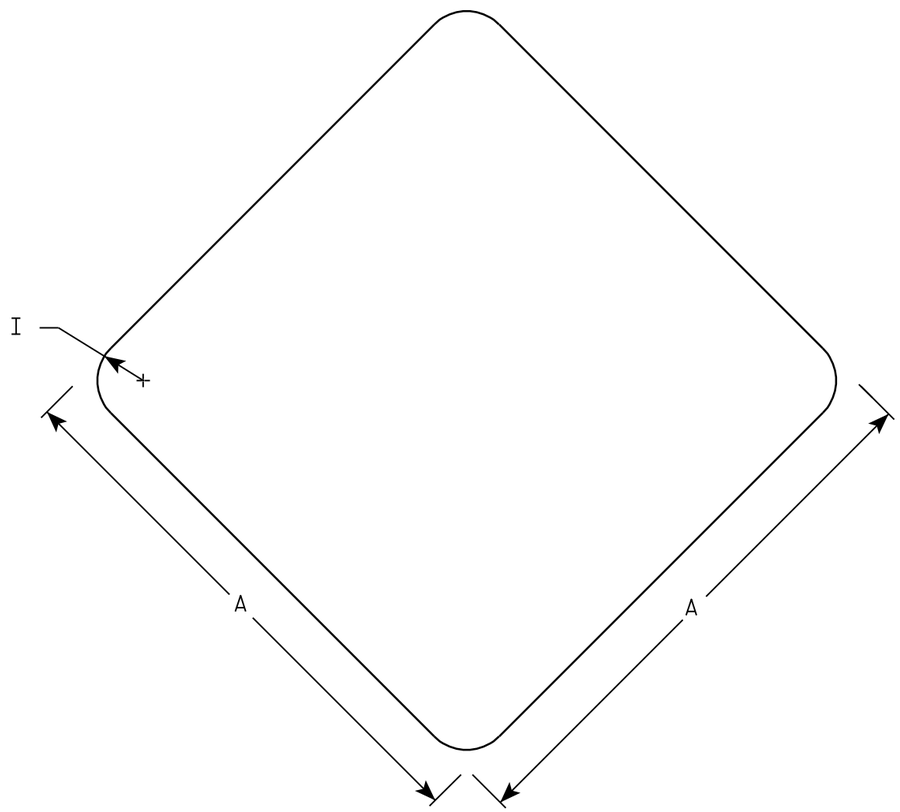

W5-54

NOTES

1. Sign is Type II - Type F Reflective - reference WIS DOT Standard Specification for HIGHWAY and STRUCTURE CONSTRUCTION latest edition.
2. Color:
   Background - Yellow
3. Corners may be square or rounded when base material is plywood. When base material is metal the corners shall be rounded.

SIZE	A	B	C	D	E	F	G	H	I	J	K	L	M	N	O	P	Q	R	S	T	U	V	W	X	Y	Z	Area sq. ft.
1	12								1																		1.0
2S	18								1 ½																		2.25
2M	18								1 ½																		2.25
3																											
4																											
5																											

STANDARD SIGN
W5-54

WISCONSIN DEPT OF TRANSPORTATION

APPROVED Matthew R Rauch
for State Traffic Engineer

DATE 11/3/10 PLATE NO. W5-54.8

PROJECT NO:	HWY:	COUNTY:		SHEET NO: 177	E

EB	Station Quantities				
Station	Cut		Fill		Mass
	Area	Volume	Area	Volume	Ordinate
100+00.00	158.4	0.0	5.5	0.0	0
100+50.00	187.4	320.2	2.2	7.1	313.1
101+00.00	218.1	375.5	0.0	2.0	686.5
101+50.00	144.4	335.6	0.8	0.7	1021.4
102+00.00	176.2	296.9	0.0	0.7	1317.5
102+50.00	150.4	302.4	6.3	5.8	1614.1
103+00.00	268.1	387.5	16.7	21.3	1980.3
103+50.00	183.6	418.2	10.3	25.0	2373.5
104+00.00	229.1	382.1	5.1	14.3	2741.4
104+50.00	106.3	310.6	3.5	8.0	3044.0
105+00.00	113	203.1	4.3	7.2	3239.8
105+50.00	123.2	218.7	1.0	4.9	3453.6
106+00.00	138.8	242.6	0.4	1.3	3694.9
106+50.00	155	272.0	0.0	0.4	3966.6
107+00.00	161.2	292.8	0.0	0.0	4259.4
107+50.00	164.8	301.9	0.0	0.0	4561.2
108+00.00	191.3	329.7	3.0	2.8	4888.1
Total:		4989.7		101.6	

EB	Cut		Fill		Mass
Station	Area	Volume	Area	Volume	Ordinate
110+00.00	149.5	2.8	2.9	0.0	0
110+50.00	105.8	236.4	8.0	10.1	226.3
111+00.00	131.9	220.1	0.0	7.4	439.0
111+50.00	91.2	206.6	11.5	10.6	634.9
112+00.00	52	132.6	5.5	15.7	751.8
112+50.00	49.8	94.3	4.0	8.8	837.2
113+00.00	47.3	89.9	3.1	6.6	920.6
113+50.00	43.6	84.2	2.2	4.9	999.8
114+00.00	50.8	87.4	49.1	47.5	1039.7
114+50.00	62.2	104.6	45.3	87.4	1056.9
115+00.00	80.6	132.2	37.5	76.7	1112.5
115+50.00	113.3	179.5	0.0	34.7	1257.3
116+00.00	144.7	238.9	0.0	0.0	1496.2
116+50.00	165.7	287.4	0.0	0.0	1783.6
117+00.00	185.1	324.8	0.0	0.0	2108.4
117+45.89	172.9	305.0	0.0	0.0	2413.4
Total		2726.6		310.5	

WB	Station Quantities				
Station	Cut		Fill		Mass
	Area	Volume	Area	Volume	Ordinate
104+50.00	89.48	0	10.07	0	0
105+00.00	73.21	150.6	8.73	17.4	133.2
105+50.00	89.03	150.2	6.64	14.2	269.2
106+00.00	112.96	187	2.31	8.3	448
106+50.00	102.86	199.8	0.31	2.4	645.4
107+00.00	72.43	162.3	0.17	0.4	807.2
107+50.00	47.31	110.9	1.5	1.5	916.6
108+00.00	27.65	69.4	30.75	29.9	956.1
Total:		1030.3		74.2	

WB					Mass
Station	Area	Volume	Area	Volume	Ordinate
110+00.00	38.24	0	116.07	0	0
110+50.00	60.12	91.1	59.73	162.8	-71.7
111+00.00	24.7	78.5	66.21	116.6	-109.8
111+50.00	19.6	41	85.6	140.6	-209.3
111+65.00	19.94	11	40.9	35.1	-233.5
112+00.00	6.36	17	59.47	65.1	-281.5
112+50.00	4.96	10.5	53.83	104.9	-375.9
113+00.00	6.5	10.6	46.74	93.1	-458.4
113+50.00	6.57	12.1	43.44	83.5	-529.8
Total:		271.9		801.7	

CIRCLE	Cut	Fill	Mass
Grand Total:	Volume	Volume	Ordinate
	1000	1800	-800

9

9

NB	- - - - - - - - - - - - - - Station Quantities - - - - - - - - - - - - - -				
Station	- - - - - - - Cut - - - - - - -		- - - - - - - Fill - - - - - - -		Mass
	Area	Volume	Area	Volume	Ordinate
199+00.00	60.55	0	2.85	0	0
199+50.00	68.23	119.2	0	2.6	116.6
200+00.00	129.1	182.7	1.53	1.4	297.9
200+50.00	142.38	251.4	0	1.4	547.8
201+00.00	138.82	260.4	0.41	0.4	807.8
201+50.00	134.8	253.3	9.09	8.8	1052.4
202+00.00	145.08	259.1	6.88	14.8	1296.7
202+25.00	158.15	140.4	6.38	6.1	1431
202+50.00	168.23	151.1	6.5	6	1576.1
203+00.00	173.93	316.8	2.86	8.7	1884.3
203+50.00	171.05	319.4	2.82	5.3	2198.4
204+00.00	90.17	241.9	1.3	3.8	2436.5
204+50.00	96.16	172.5	1.02	2.1	2606.9
205+00.00	95.82	177.8	1.47	2.3	2782.3
205+50.00	98.55	180	5.2	6.2	2956.1
206+00.00	108.03	191.3	25.66	28.6	3118.8
206+50.00	115.28	206.8	48.36	68.5	3257.1
207+00.00	107.71	206.5	9.21	53.3	3410.3
207+50.00	105.31	197.2	38.97	44.6	3562.9
Total:		3827.8		264.9	

NB	- - - - - - - Cut - - - - - - -		- - - - - - - Fill - - - - - - -		Mass
Station	Area	Volume	Area	Volume	Ordinate
209+50.00	8.48	0	92.86	0	0
210+00.00	21.26	27.5	64.16	145.4	-117.9
210+50.00	111.51	122.9	35.41	92.2	-87.1
210+90.00	155.89	198.1	35.06	52.2	58.8
211+00.00	162.01	58.9	37.6	13.5	104.2
211+50.00	168.79	306.3	11.1	45.1	365.4
211+60.00	171.18	63	10.84	4.1	424.3
212+00.00	176.24	257.3	17.51	21	660.6
212+50.00	199.52	347.9	0.06	16.3	992.3
212+70.00	194.74	146	0.45	0.2	1138.1
213+00.00	190.62	214.1	1.34	1	1351.2
213+50.00	170.37	334.2	2.39	3.5	1682
213+65.00	167.52	93.9	6.72	2.5	1773.3
214+00.00	184	227.8	3.98	6.9	1994.2
214+50.00	144.28	304	3.15	6.6	2291.6
215+00.00	136.31	259.8	2.37	5.1	2546.2
215+50.00	130.71	247.2	1.08	3.2	2790.3
216+00.00	137.21	248.1	0	1	3037.4
216+50.00	147.56	263.7	0	0	3301
216+75.80	151.83	143	0	0	3444.1
217+00.00	152.26	136.3	0	0	3580.3
Total:		4000		419.7	

NB	- - - - - - - - - - - - - - Station Quantities - - - - - - - - - - - - - -				
Station	- - - - - - - Cut - - - - - - -		- - - - - - - Fill - - - - - - -		Mass
	Area	Volume	Area	Volume	Ordinate
204+00.00	68.76	0	3.65	0	0
204+50.00	67.16	125.8	3.83	6.9	118.9
205+00.00	66.07	123.4	5.15	8.3	234
205+50.00	64.49	120.9	6.69	11	343.9
206+00.00	71.36	125.8	5.21	11	458.6
206+50.00	105.46	163.7	6.21	10.6	611.8
207+00.00	91.32	182.2	0	5.7	788.3
Total:		841.8		53.6	
	- - - - - - - Cut - - - - - - -		- - - - - - - Fill - - - - - - -		Mass
	Area	Volume	Area	Volume	Ordinate
209+50.00	27.76	0	32.36	0	0
210+00.00	42.56	65.1	16.31	45.1	20.1
Total:		65.1		45.1	

9

9

TW1	- - - - - - - - - - - - - - Station Quantities - - - - - - - - - - - - - -				
Station	- - - - - - - Cut - - - - - - -		- - - - - - - Fill - - - - - - -		Mass
	Area	Volume	Area	Volume	Ordinate
702+00.00	6.49	0	22.68	0	0
702+50.00	7.38	12.8	36.38	54.7	-41.8
703+00.00	7.26	13.6	33.47	64.7	-93
703+50.00	7.16	13.4	20.16	49.7	-129.3
704+00.00	9.92	15.8	12.19	30	-143.4
704+50.00	8.99	17.5	8.6	19.3	-145.2
705+00.00	7.67	15.4	3.76	11.5	-141.2
705+50.00	8.46	14.9	3.04	6.3	-132.5
706+00.00	9.14	16.3	2.49	5.1	-121.4
706+50.00	7.65	15.5	1.2	3.4	-109.2
707+00.00	7.41	13.9	2.73	3.6	-98.9
707+50.00	10.54	16.6	0	2.5	-84.8
708+00.00	7.29	16.5	0.11	0.1	-68.4
708+50.00	6.1	12.4	0.34	0.4	-56.4
709+00.00	5.27	10.5	0.35	0.6	-46.5
709+50.00	6.36	10.8	1.86	2.1	-37.8
710+00.00	6.4	11.8	13.91	14.6	-40.6
710+50.00	1.26	7.1	28.51	39.3	-72.8
711+00.00	0.04	1.2	52.24	74.8	-146.3
Total:		236		382.7	

TW1	- - - - - - Cut - - - - - -		- - - - - - Fill - - - - - -		Mass
Station	Area	Volume	Area	Volume	Ordinate
712+50.00	0	0	166.58	0	0
713+00.00	0	0	170.68	312.3	-312.3
713+50.00	0.06	0.1	151.54	298.4	-610.6
714+00.00	6.96	6.5	78.37	212.9	-816.9
714+50.00	7.71	13.6	32.24	102.4	-905.8
715+00.00	6.03	12.7	17.14	45.7	-938.8
715+50.00	6.37	11.5	11.04	26.1	-953.4
716+00.00	7.11	12.5	12.33	21.6	-962.6
716+50.00	7.67	13.7	11	21.6	-970.5
717+00.00	7.61	14.1	6.95	16.6	-972.9
717+50.00	7.31	13.8	8.51	14.3	-973.4
718+00.00	6.46	12.7	12.31	19.3	-980
718+50.00	6.04	11.6	14.98	25.3	-993.7
719+00.00	6.44	11.6	14.85	27.6	-1009.7
719+50.00	6.75	12.2	16.03	28.6	-1026.1
720+00.00	7.07	12.8	20.92	34.2	-1047.5
720+50.00	7.29	13.3	28.22	45.5	-1079.7
721+00.00	7.44	13.6	18.83	43.6	-1109.7
721+50.00	13.14	19.1	0	17.4	-1108
Total:		205.4		1313.4	

TW2	- - - - - - - - - - - - - - Station Quantities - - - - - - - - - - - - - -				
Station	- - - - - - - Cut - - - - - - -		- - - - - - - Fill - - - - - - -		Mass
	Area	Volume	Area	Volume	Ordinate
801+50.00	7.97	0	25.69	0	0
802+00.00	6.85	13.7	21.83	44	-30.3
802+50.00	4.56	10.6	14.47	33.6	-53.3
803+00.00	3.71	7.7	5.61	18.6	-64.3
803+50.00	3.16	6.4	3.99	8.9	-66.8
804+00.00	7.52	9.9	0	3.7	-60.6
804+50.00	21.45	26.8	0	0	-33.8
805+00.00	15.07	33.8	0	0	0
Total:		108.8		108.8	

TW3	- - - - - - - - - - - - - - Station Quantities - - - - - - - - - - - - - -				
Station	- - - - - - - Cut - - - - - - -		- - - - - - - Fill - - - - - - -		Mass
	Area	Volume	Area	Volume	Ordinate
902+50.00	0	0	45.37	0	0
903+00.00	0	0	38	77.2	-77.2
903+50.00	0	0	32.19	65	-142.2
904+00.00	1.48	1.4	25.99	53.9	-194.7
904+50.00	3.28	4.4	20.27	42.8	-233.1
905+00.00	6.18	8.8	19.18	36.5	-260.9
905+50.00	8.98	14	1.38	19	-265.9
906+00.00	7.6	15.4	0	1.3	-251.8
Grand Total:		43.9		295.7	

9

9

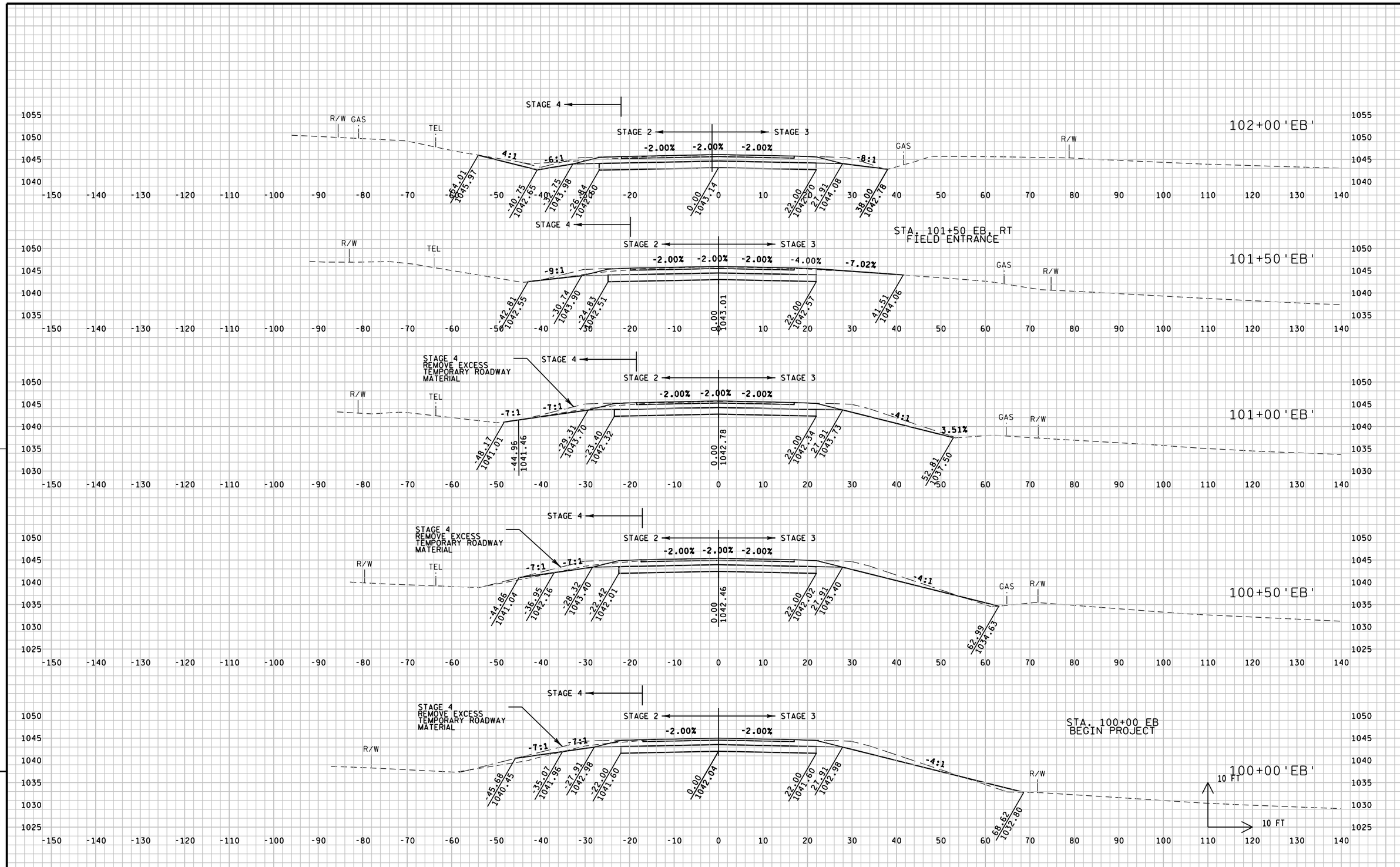

9

9

PROJECT NO:3042-00-73	HWY:STH 60	COUNTY:DODGE	CROSS SECTIONS:EB STH 60	SHEET 181	E

FILE NAME : G:\2011\11981 STH 60 & CTH P Rubicon\Micros\InRoads\XSections\EB.dgn PLOT DATE : 7/19/2013 PLOT BY : O.R.E., Inc. PLOT NAME : PLOT SCALE : 20.0000 sf / in.

WISDOT/CADDS SHEET 21

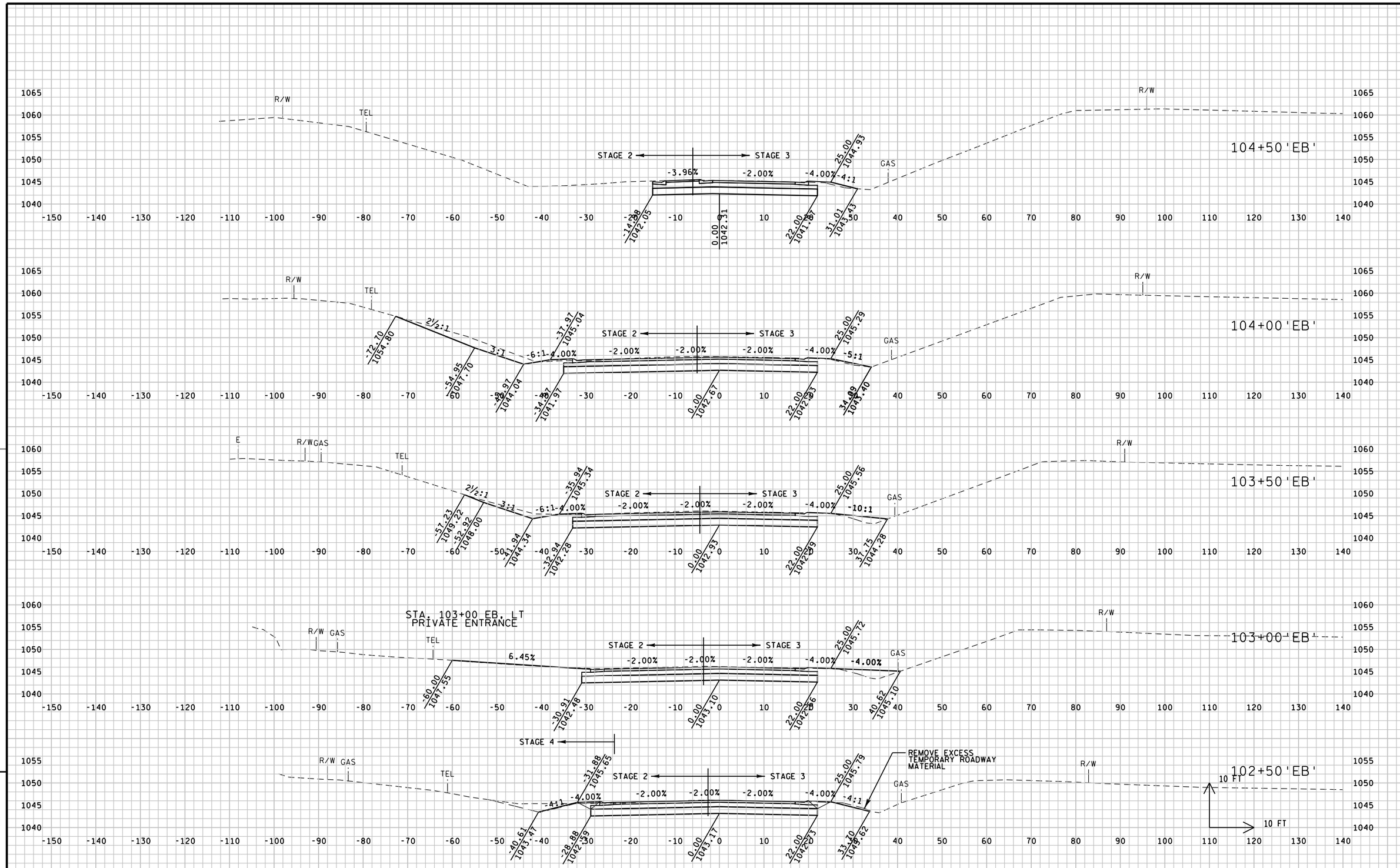

PROJECT NO:3042-00-73	HWY:STH 60	COUNTY:DODGE	CROSS SECTIONS:EB STH 60	SHEET 182	E

FILE NAME : G:\2011\11981 STH 60 & CTH P Rubicon\Micros\InRoads\XSections\EB.dgn PLOT DATE : 7/19/2013 PLOT BY : O.R.E., Inc. PLOT NAME : PLOT SCALE : 20.0000 sf / in.

WISDOT/CADDS SHEET 21

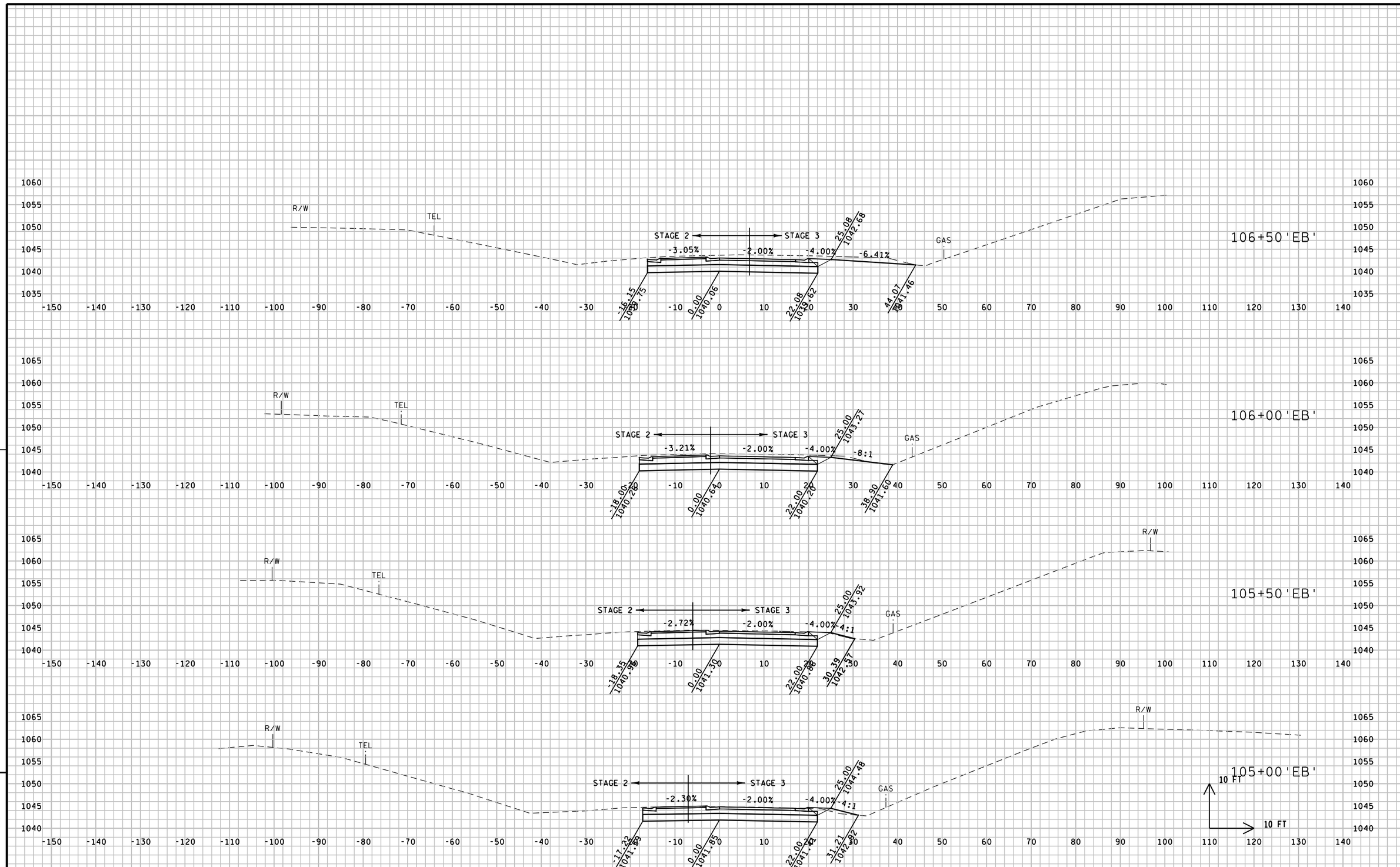

9

9

PROJECT NO:3042-00-73	HWY:STH 60	COUNTY:DODGE	CROSS SECTIONS:EB STH 60	SHEET 183	E

FILE NAME : G:\2011\11981 STH 60 & CTH P Rubicon\Micros\InRoads\XSections\EB.dgn PLOT DATE : 7/19/2013 PLOT BY : O.R.E., Inc. PLOT NAME : PLOT SCALE : 20.0000 sf / in. WISDOT/CADDS SHEET 21

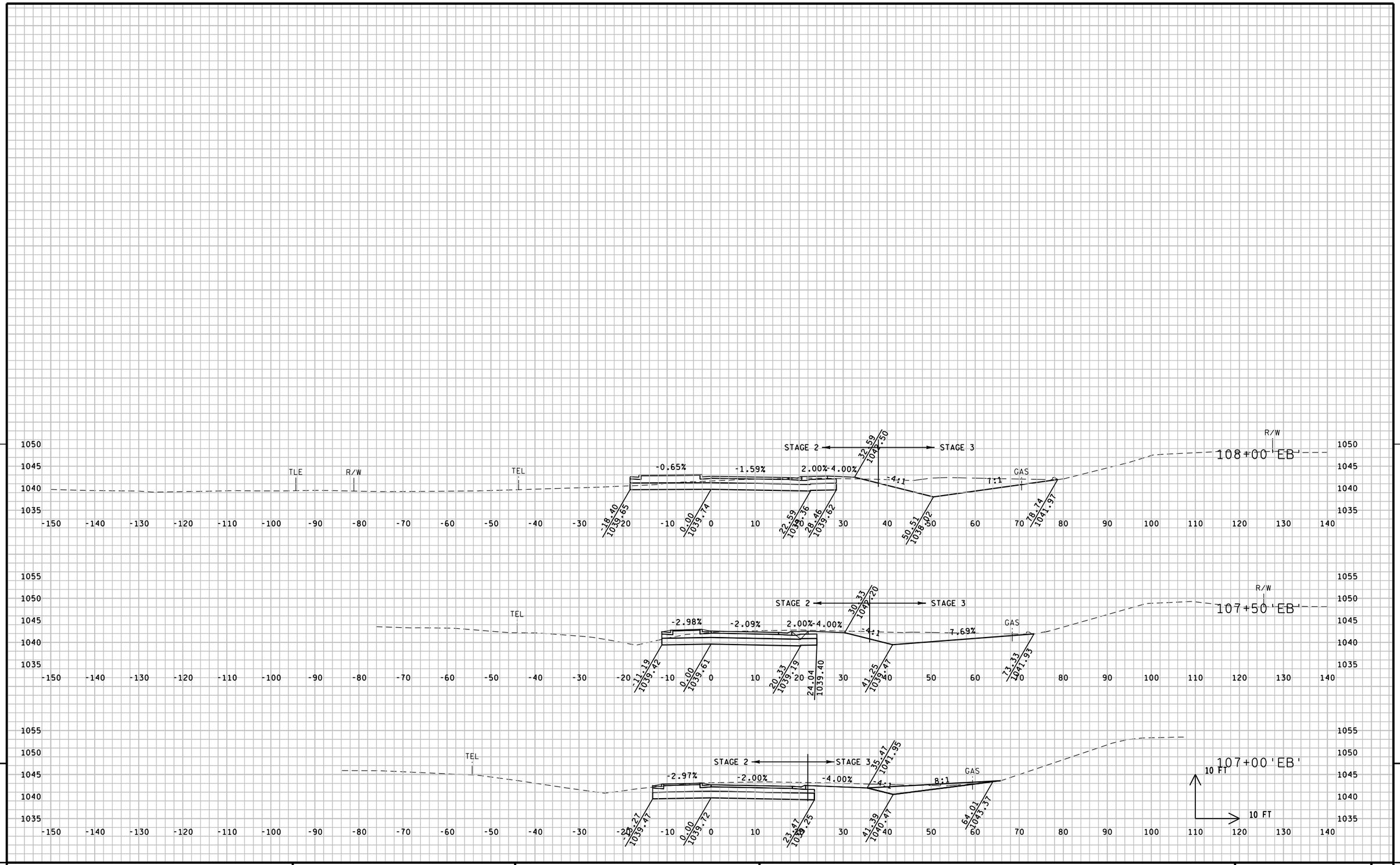

PROJECT NO:3042-00-73	HWY:STH 60	COUNTY:DODGE	CROSS SECTIONS:EB STH 60	SHEET 184	E

FILE NAME : G:\2011\11981 STH 60 & CTH P Rubicon\Micros\InRoads\XSections\EB.dgn PLOT DATE : 7/19/2013 PLOT BY : O.R.E., Inc. PLOT NAME : PLOT SCALE : 20.0000 sf / in.

WISDOT/CADDS SHEET 21

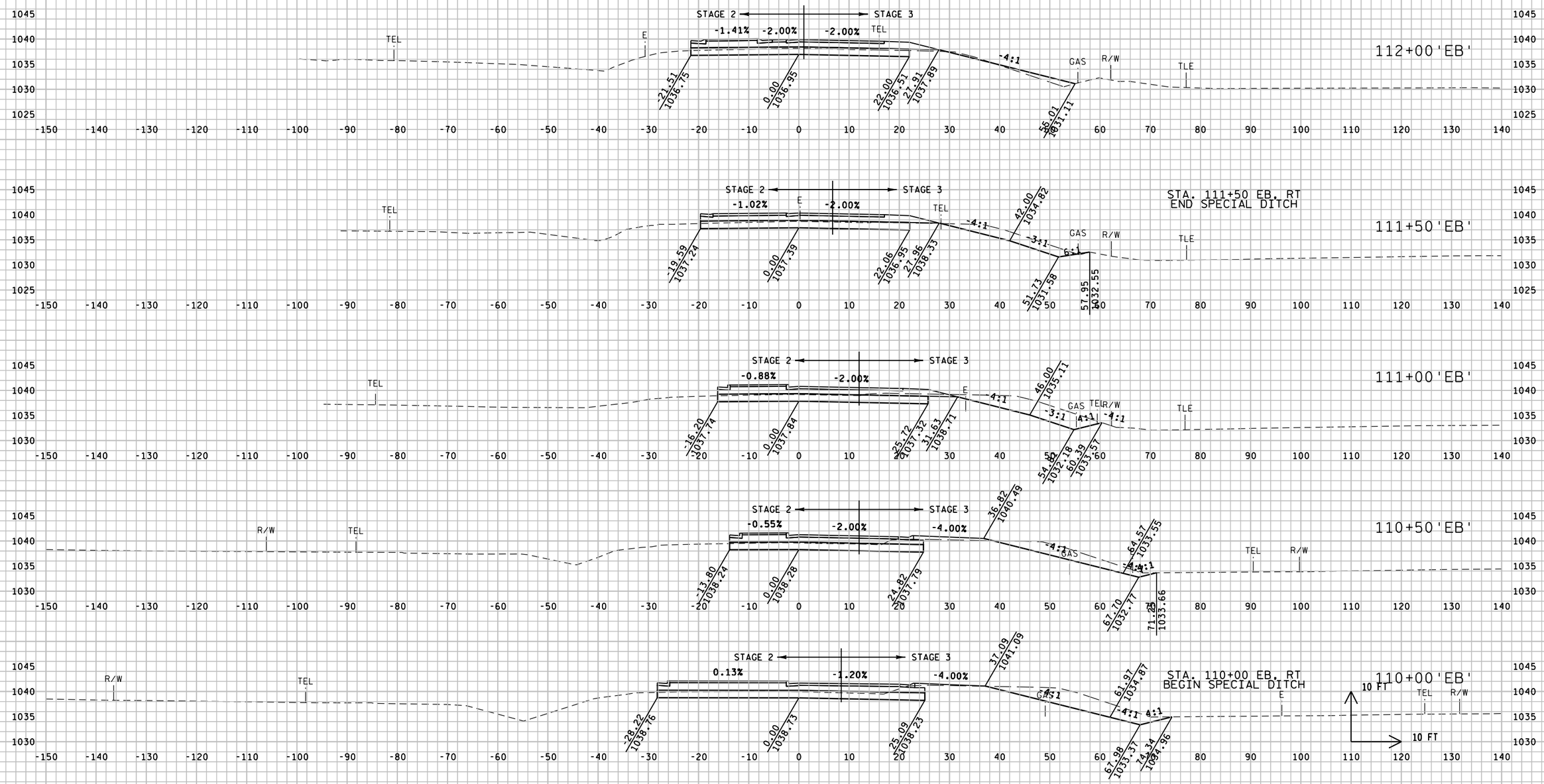

9

9

PROJECT NO:3042-00-73	HWY:STH 60	COUNTY:DODGE	CROSS SECTIONS:EB STH 60	SHEET 185	E

FILE NAME : G:\2011\11981 STH 60 & CTH P Rubicon\Micros\InRoads\XSections\EB.dgn PLOT DATE : 7/19/2013 PLOT BY : O.R.E., Inc. PLOT NAME : PLOT SCALE : 20.0000 sf / in. WISDOT/CADDS SHEET 21

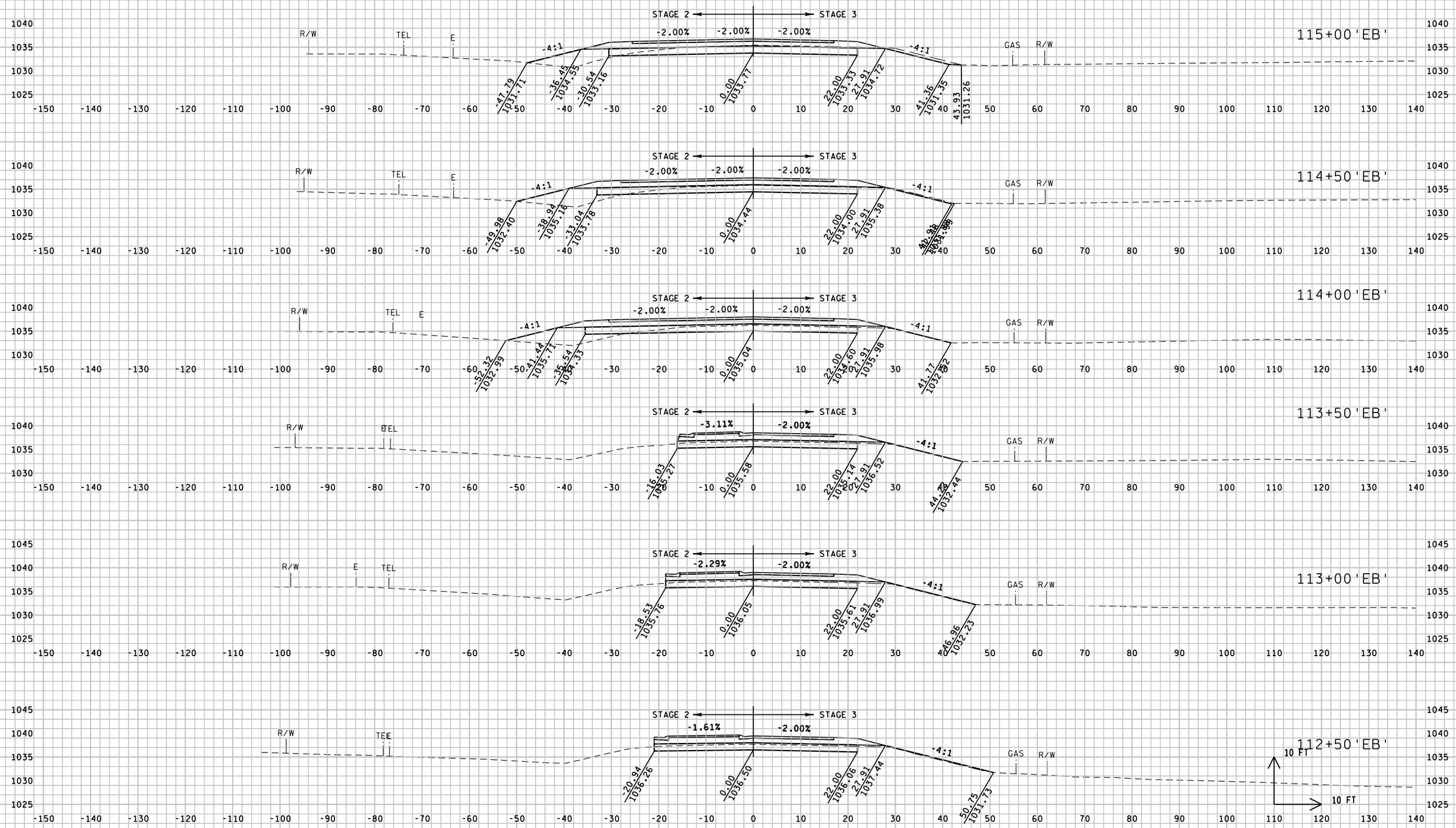

PROJECT NO:3042-00-73	HWY:STH 60	COUNTY:DODGE	CROSS SECTIONS:EB STH 60	SHEET 186	E

FILE NAME : G:\2011\11981 STH 60 & CTH P Rubicon\Micros\InRoads\XSections\EB.dgn PLOT DATE : 7/19/2013 PLOT BY : O.R.E., Inc. PLOT NAME : PLOT SCALE : 20.0000 sf / in. WISDOT/CADDS SHEET 21

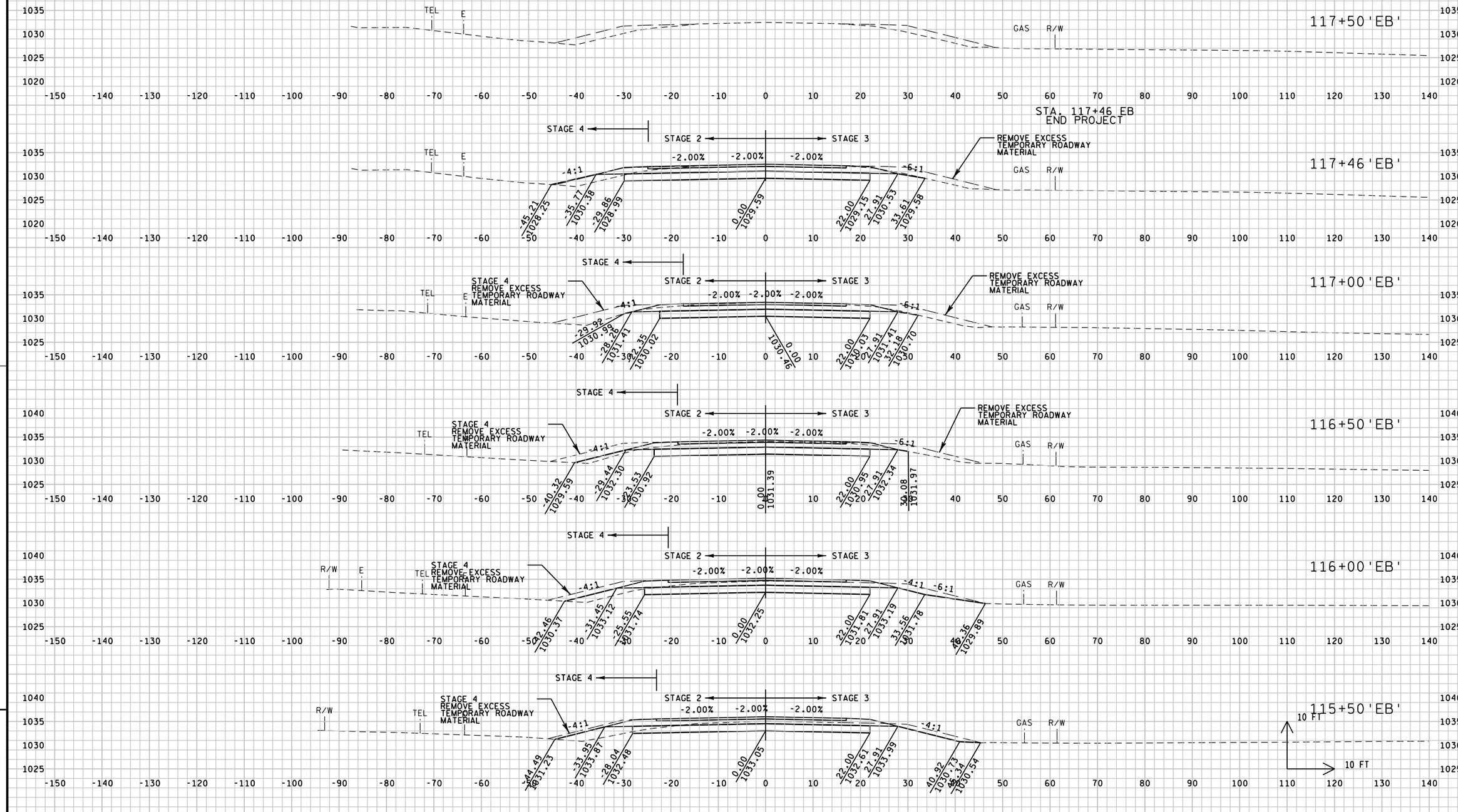

9

9

PROJECT NO:3042-00-73	HWY:STH 60	COUNTY:DODGE	CROSS SECTIONS:EB STH 60	SHEET 187	E

FILE NAME : G:\2011\11981 STH 60 & CTH P Rubicon\Micros\InRoads\XSections\EB.dgn PLOT DATE : 7/19/2013 PLOT BY : O.R.E., Inc. PLOT NAME : PLOT SCALE : 20.0000 sf / in. WISDOT/CADDS SHEET 21

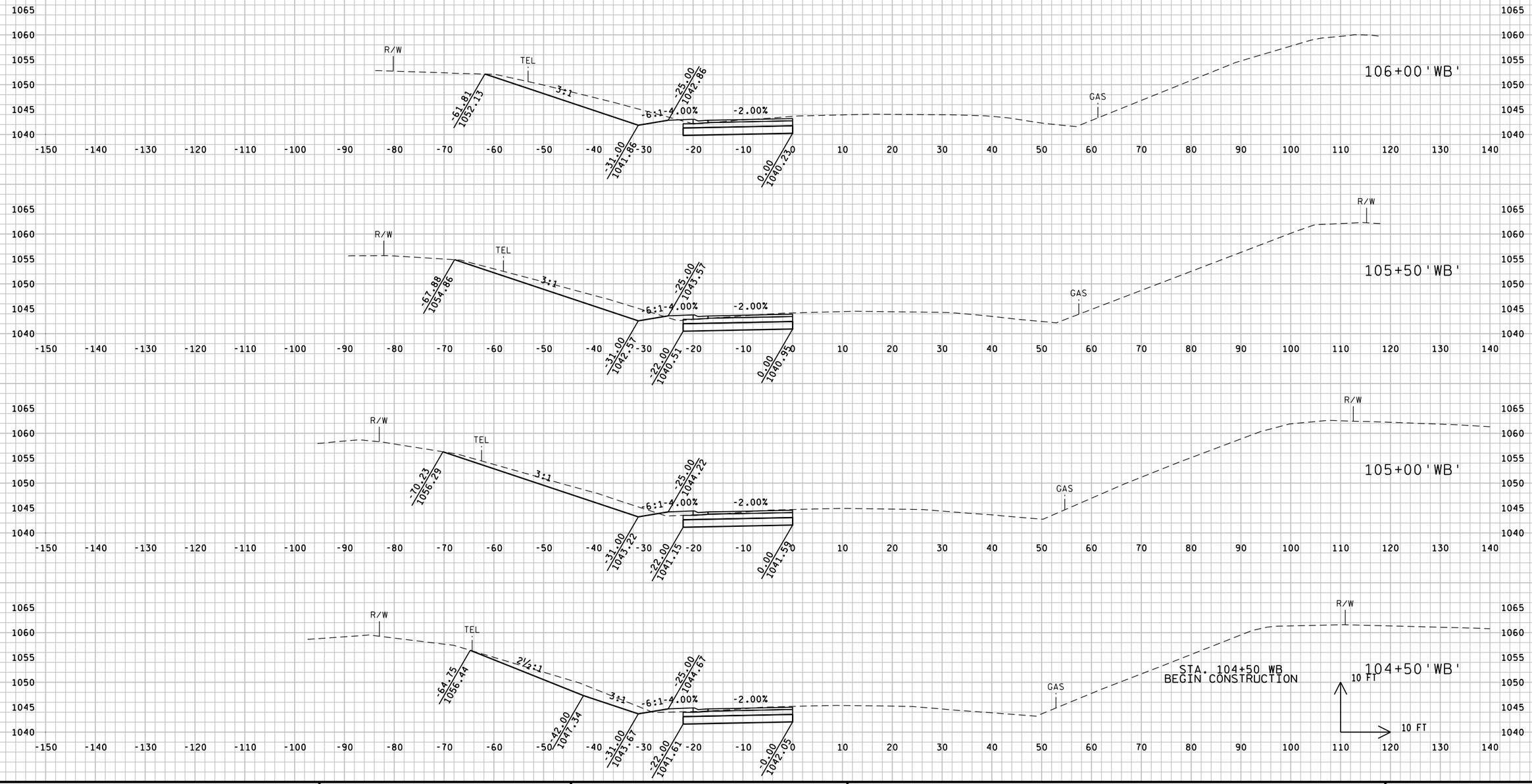

9

9

PROJECT NO:3042-00-73	HWY:STH 60	COUNTY:DODGE	CROSS SECTIONS:WB STH 60	SHEET 188	E

FILE NAME : G:\2011\11981 STH 60 & CTH P Rubicon\Micros\InRoads\XSections\WB.dgn PLOT DATE : 7/19/2013 PLOT BY : O.R.E., Inc. PLOT NAME : PLOT SCALE : 20.0000 sf / in.

WISDOT/CADDS SHEET 21

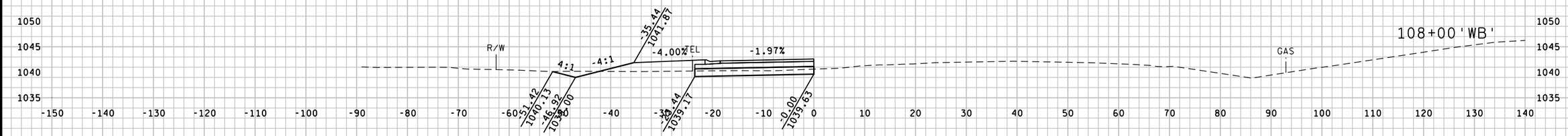

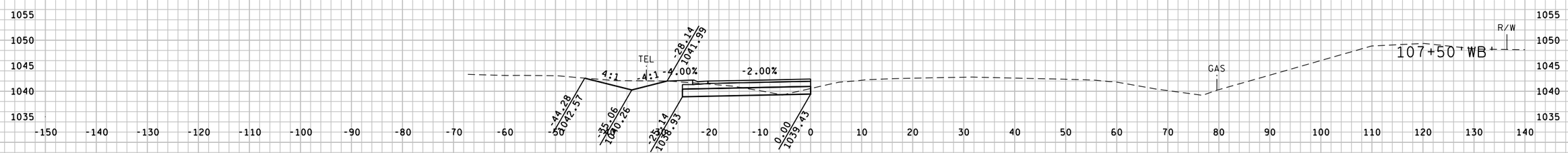

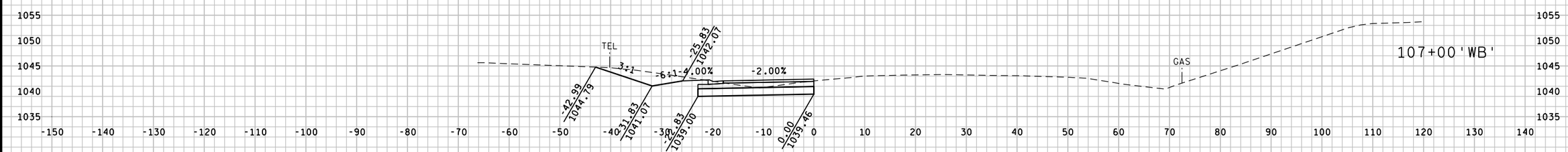

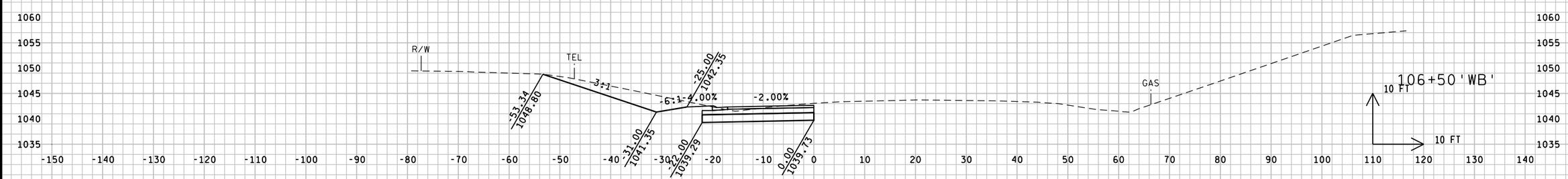

PROJECT NO:3042-00-73	HWY:STH 60	COUNTY:DODGE	CROSS SECTIONS:WB STH 60	SHEET 189	E

FILE NAME : G:\2011\11981 STH 60 & CTH P Rubicon\Micros\InRoads\XSections\WB.dgn PLOT DATE : 7/19/2013 PLOT BY : O.R.E., Inc. PLOT NAME : PLOT SCALE : 20.0000 sf / in.

WISDOT/CADDS SHEET 21

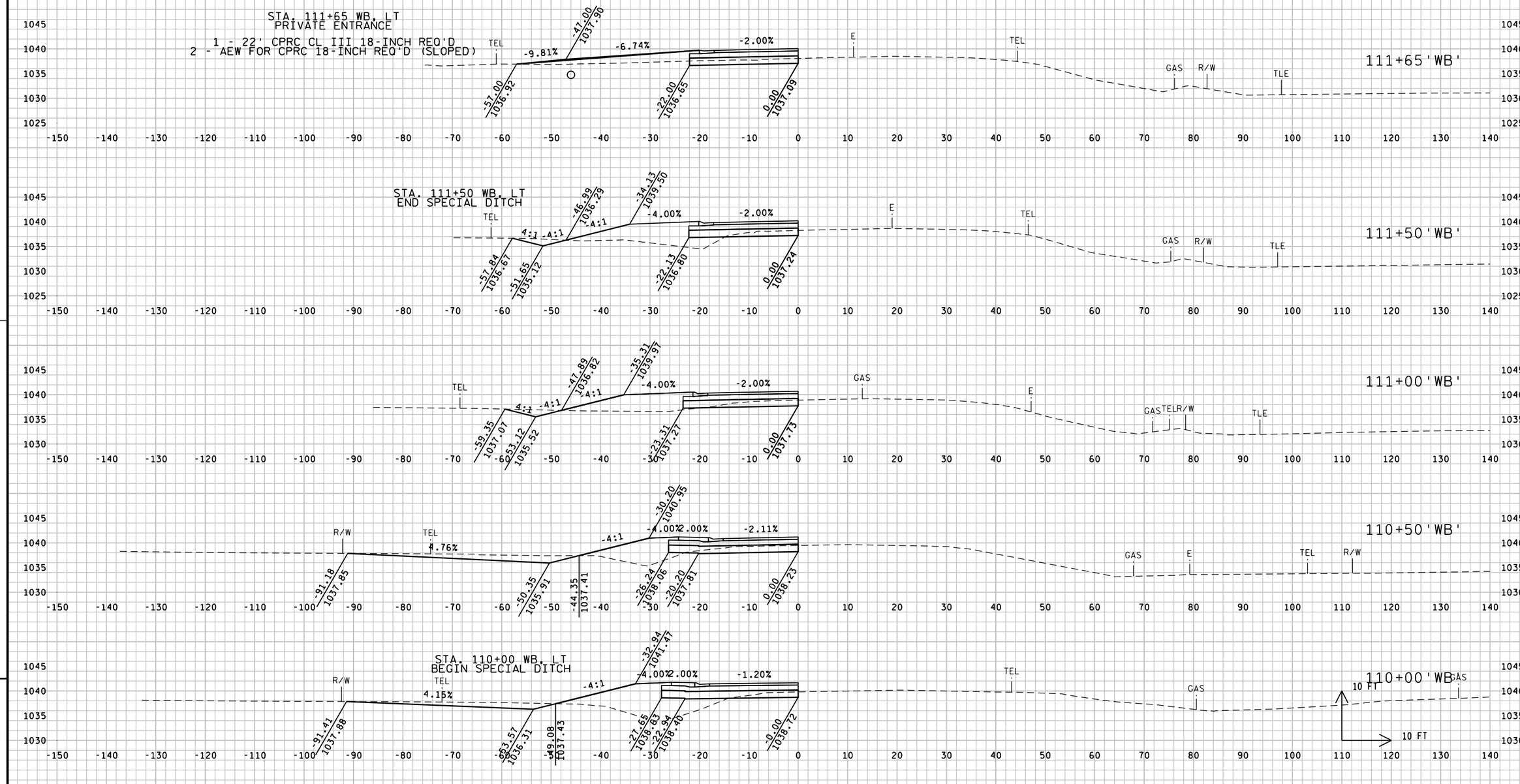

PROJECT NO:3042-00-73	HWY:STH 60	COUNTY:DODGE	CROSS SECTIONS:WB STH 60	SHEET 190	E

FILE NAME : G:\2011\11981 STH 60 & CTH P Rubicon\Micros\InRoads\XSections\WB.dgn PLOT DATE : 7/19/2013 PLOT BY : O.R.E., Inc. PLOT NAME : PLOT SCALE : 20.0000 sf / in. WISDOT/CADDS SHEET 21

PROJECT NO:3042-00-73	HWY:STH 60	COUNTY:DODGE	CROSS SECTIONS:WB STH 60	SHEET 191	E

FILE NAME : G:\2011\11981 STH 60 & CTH P Rubicon\Micros\InRoads\XSections\WB.dgn PLOT DATE : 7/19/2013 PLOT BY : O.R.E., Inc. PLOT NAME : PLOT SCALE : 20.0000 sf / in.

WISDOT/CADDS SHEET 21

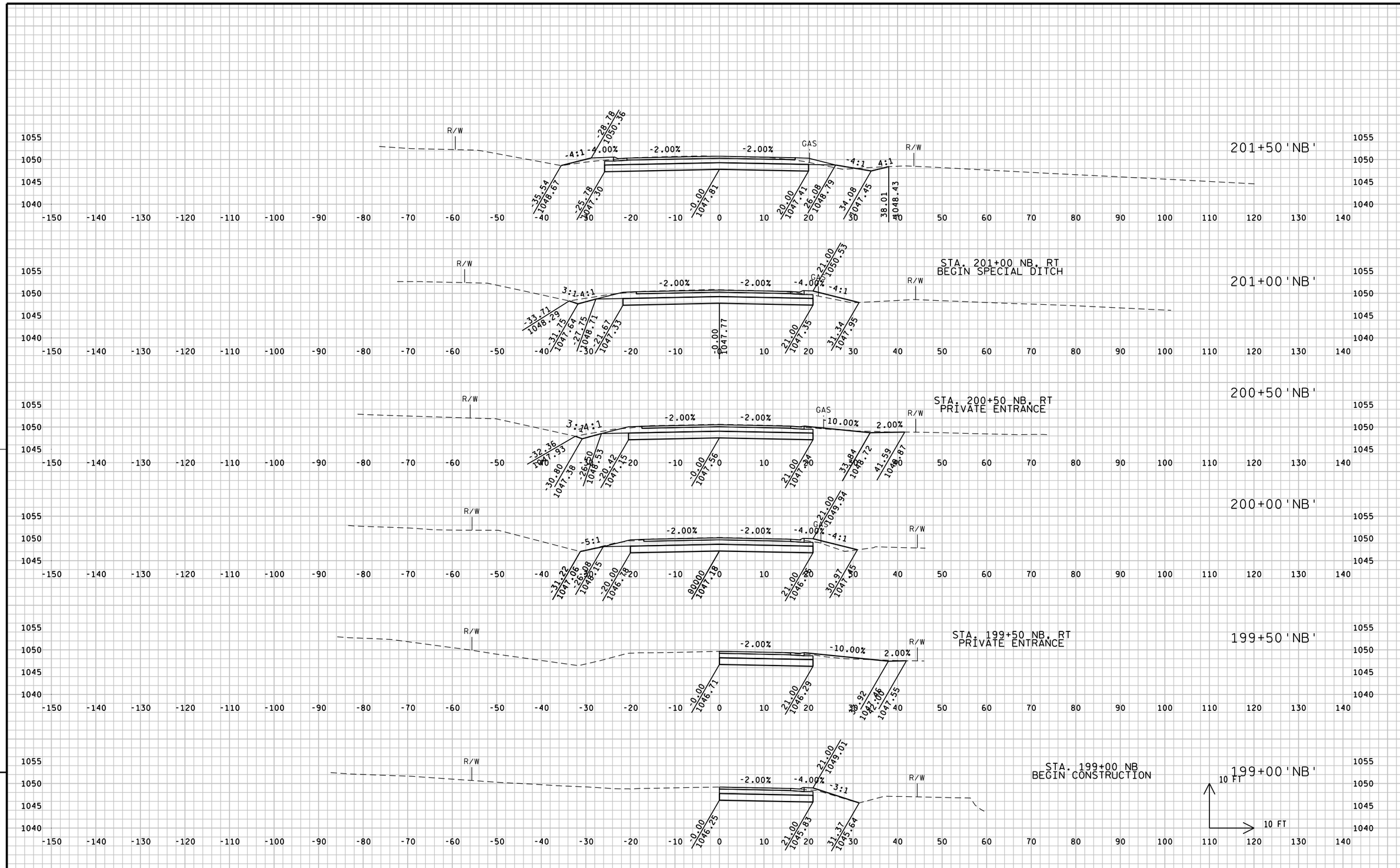

9

9

PROJECT NO:3042-00-73	HWY:STH 60	COUNTY:DODGE	CROSS SECTIONS:NB CTH P	SHEET 192	E

FILE NAME : G:\2011\11981 STH 60 & CTH P Rubicon\Micros\InRoads\XSections\NB.dgn PLOT DATE : 7/19/2013 PLOT BY : O.R.E., Inc. PLOT NAME : PLOT SCALE : 20.0000 sf / in.

WISDOT/CADDS SHEET 21

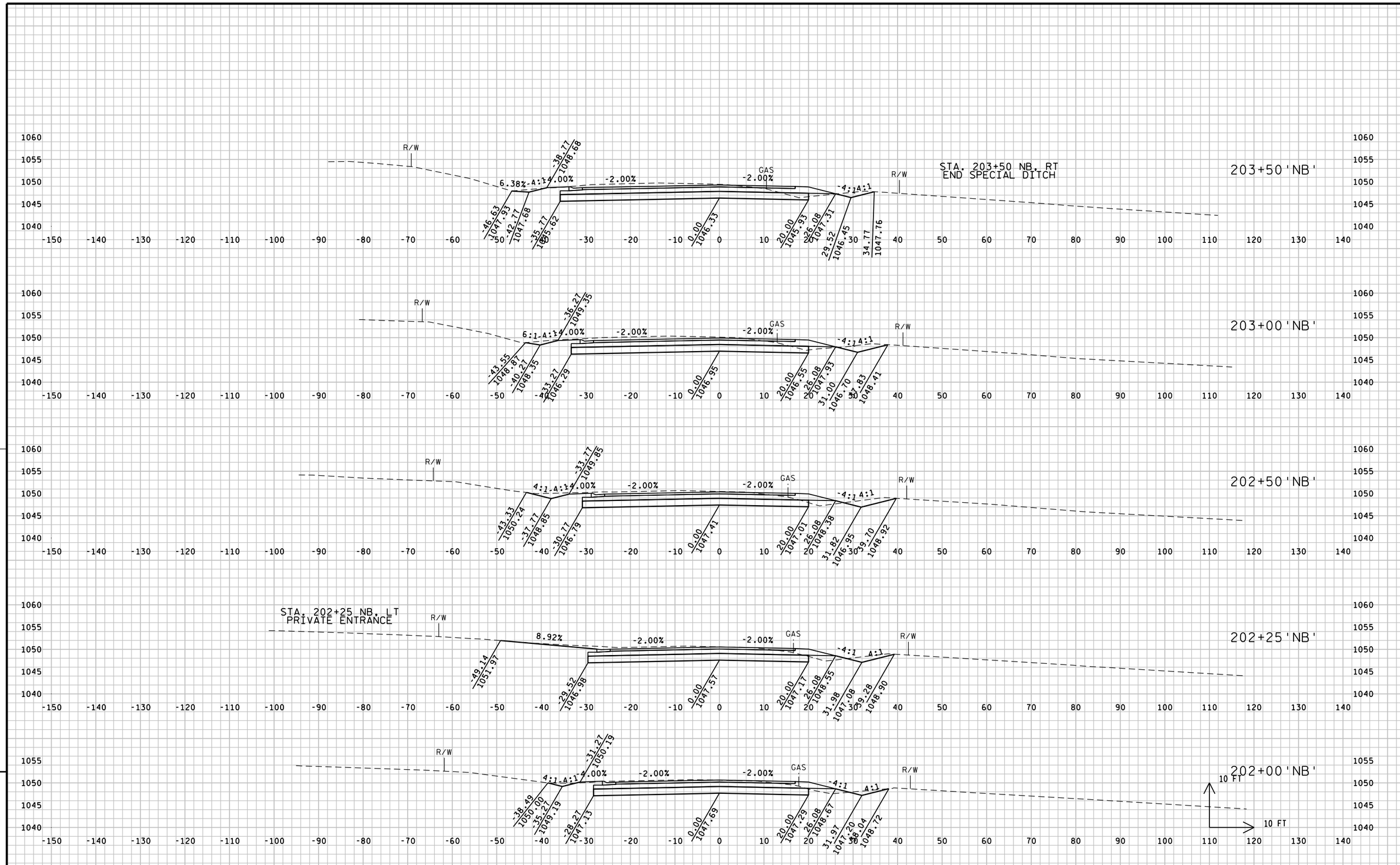

9

9

PROJECT NO:3042-00-73	HWY:STH 60	COUNTY:DODGE	CROSS SECTIONS:NB CTH P	SHEET 193	E

FILE NAME : G:\2011\11981 STH 60 & CTH P Rubicon\Micros\InRoads\XSections\NB.dgn PLOT DATE : 7/19/2013 PLOT BY : O.R.E., Inc. PLOT NAME : PLOT SCALE : 20.0000 sf / in.

WISDOT/CADDS SHEET 21

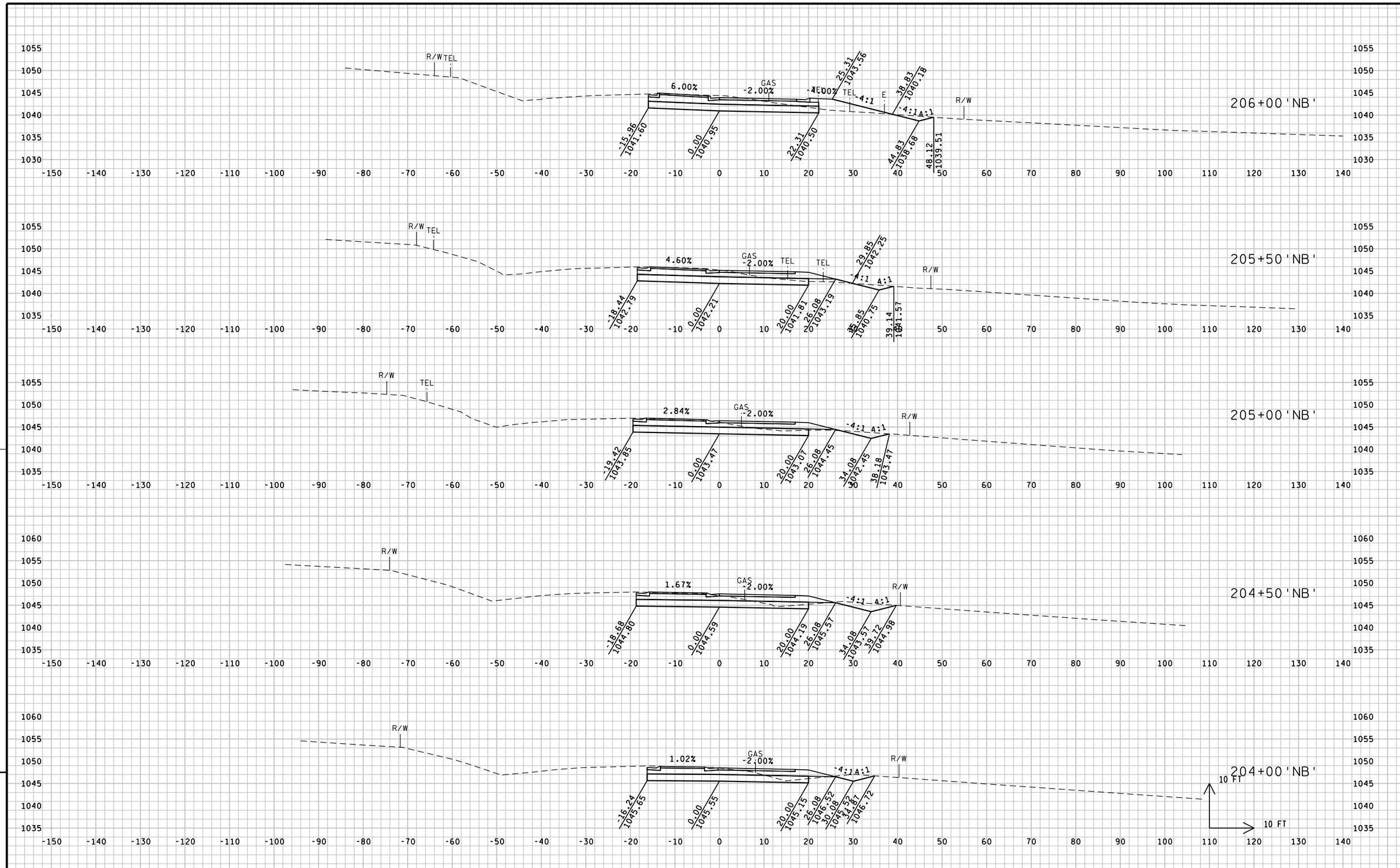

9

9

PROJECT NO:3042-00-73	HWY:STH 60	COUNTY:DODGE	CROSS SECTIONS:NB CTH P	SHEET 194	E

FILE NAME : G:\2011\11981 STH 60 & CTH P Rubicon\Micros\InRoads\XSections\NB.dgn PLOT DATE : 7/19/2013 PLOT BY : O.R.E., Inc. PLOT NAME : PLOT SCALE : 20.0000 sf / in.

WISDOT/CADDS SHEET 21

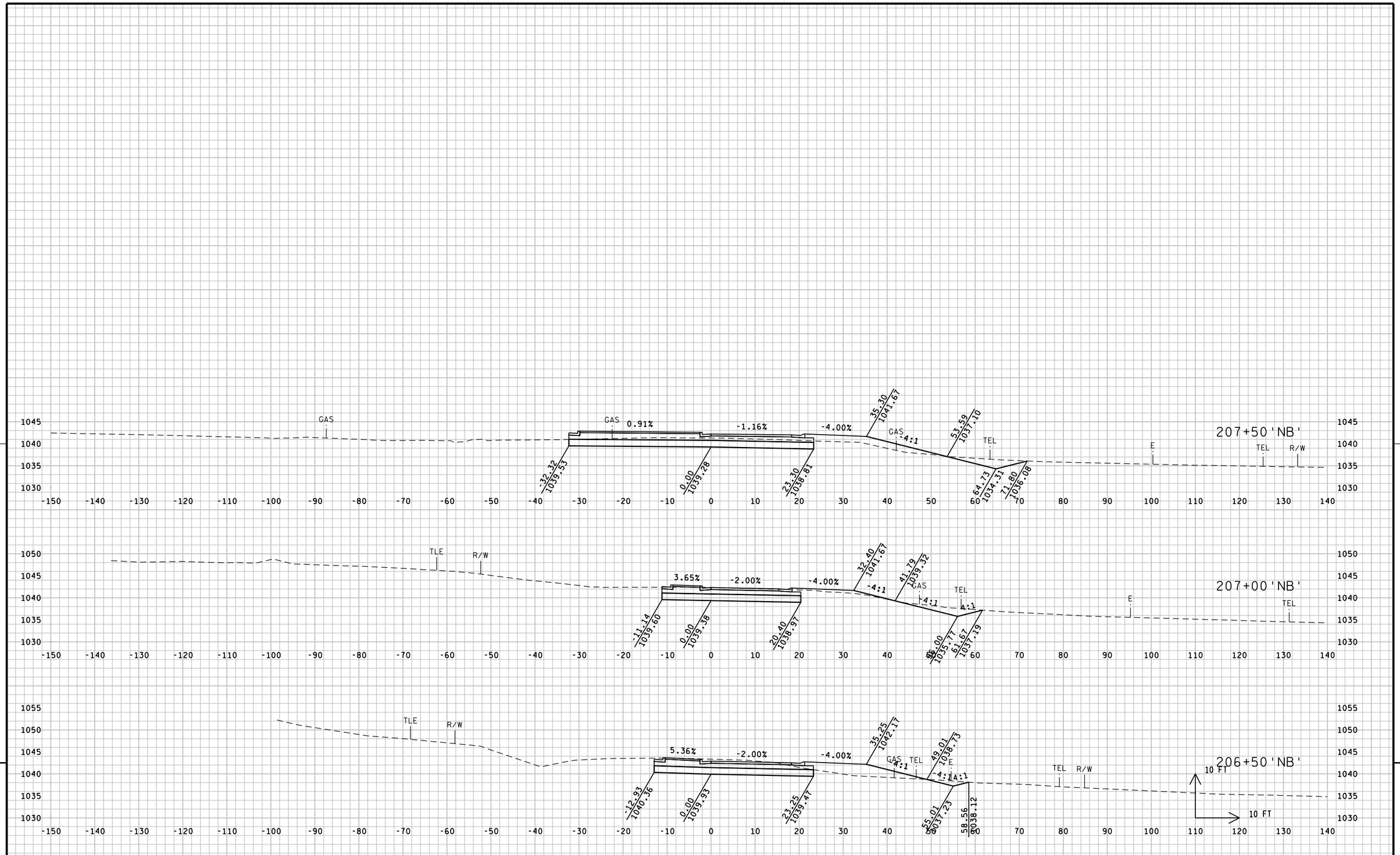

9

9

PROJECT NO:3042-00-73	HWY:STH 60	COUNTY:DODGE	CROSS SECTIONS:NB CTH P	SHEET 195	E

FILE NAME : G:\2011\11981 STH 60 & CTH P Rubicon\Micros\InRoads\XSections\NB.dgn PLOT DATE : 7/19/2013 PLOT BY : O.R.E., Inc. PLOT NAME : PLOT SCALE : 20.0000 sf / in.

WISDOT/CADDS SHEET 21

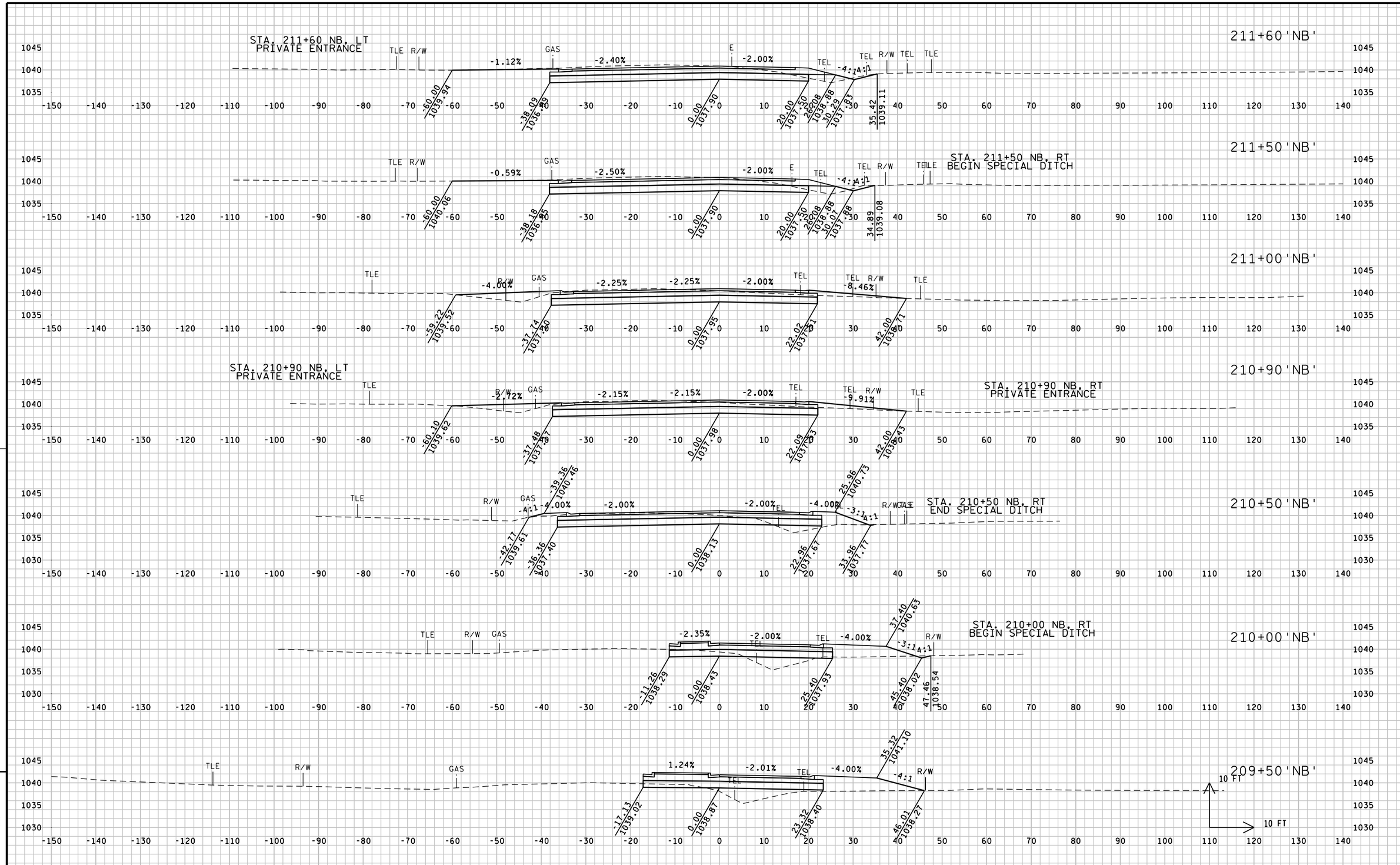

PROJECT NO:3042-00-73	HWY:STH 60	COUNTY:DODGE	CROSS SECTIONS:NB CTH P	SHEET 196	E

FILE NAME : G:\2011\11981 STH 60 & CTH P Rubicon\Micros\InRoads\XSections\NB.dgn PLOT DATE : 7/19/2013 PLOT BY : O.R.E., Inc. PLOT NAME : PLOT SCALE : 20.0000 sf / in.

WISDOT/CADDS SHEET 21

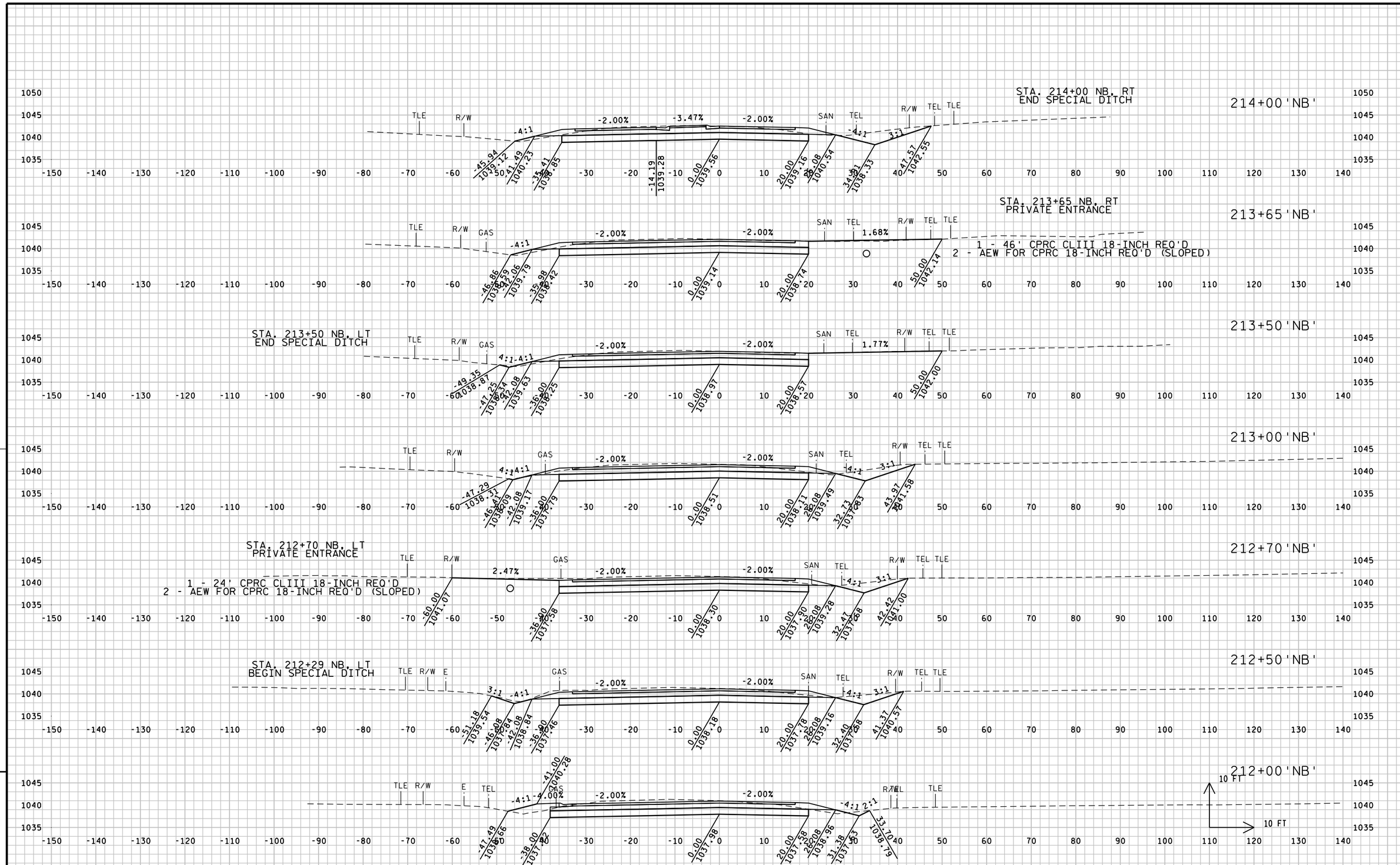

PROJECT NO:3042-00-73	HWY:STH 60	COUNTY:DODGE	CROSS SECTIONS:NB CTH P	SHEET 197	E

FILE NAME : G:\2011\11981 STH 60 & CTH P Rubicon\Micros\InRoads\XSections\NB.dgn PLOT DATE : 7/19/2013 PLOT BY : O.R.E., Inc. PLOT NAME : PLOT SCALE : 20.0000 sf / in.

WISDOT/CADDS SHEET 21

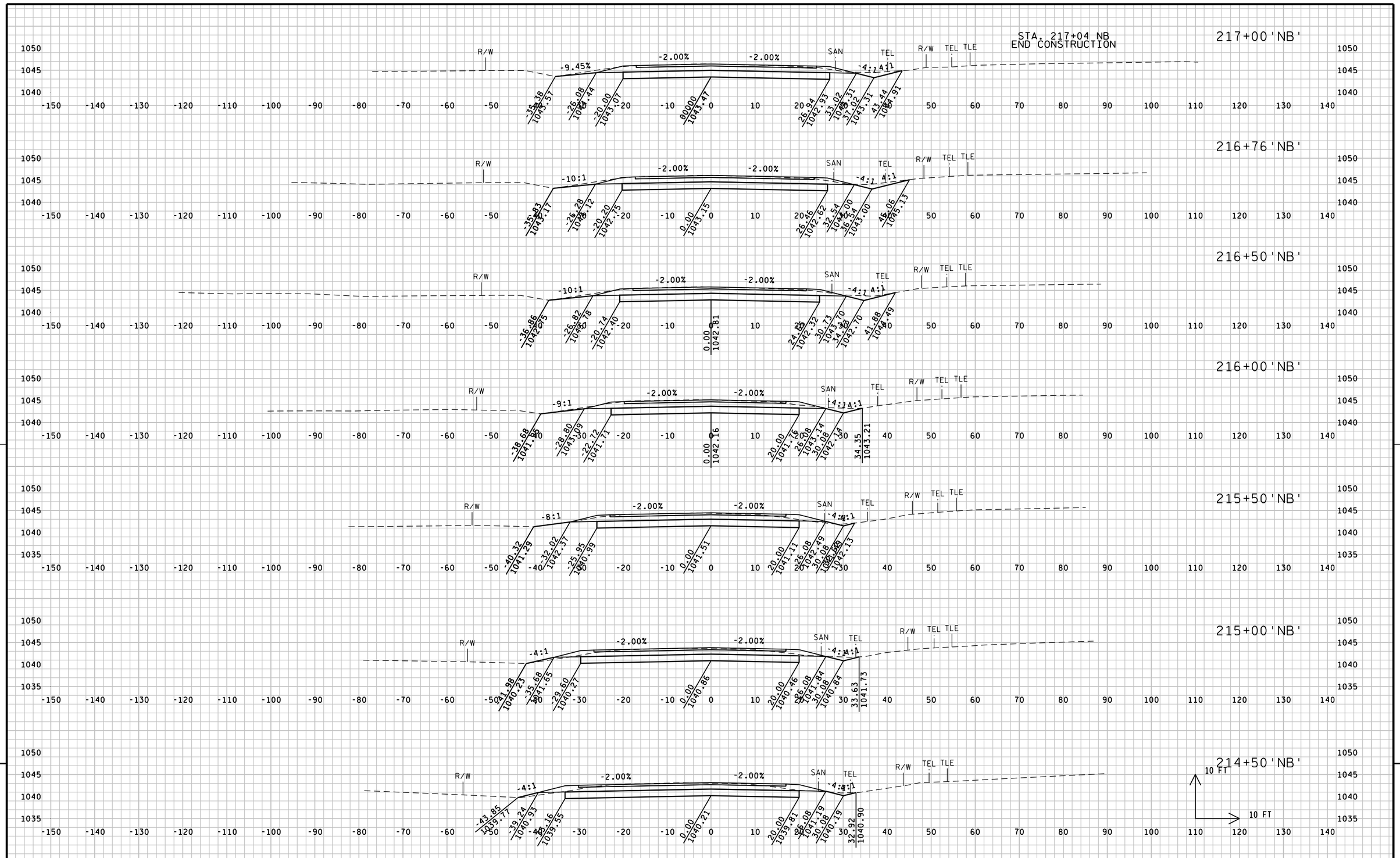

PROJECT NO:3042-00-73	HWY:STH 60	COUNTY:DODGE	CROSS SECTIONS:NB CTH P	SHEET 198	E

FILE NAME : G:\2011\11981 STH 60 & CTH P Rubicon\Micros\InRoads\XSections\NB.dgn PLOT DATE : 7/19/2013 PLOT BY : O.R.E., Inc. PLOT NAME : PLOT SCALE : 20.0000 sf / in. WISDOT/CADDS SHEET 21

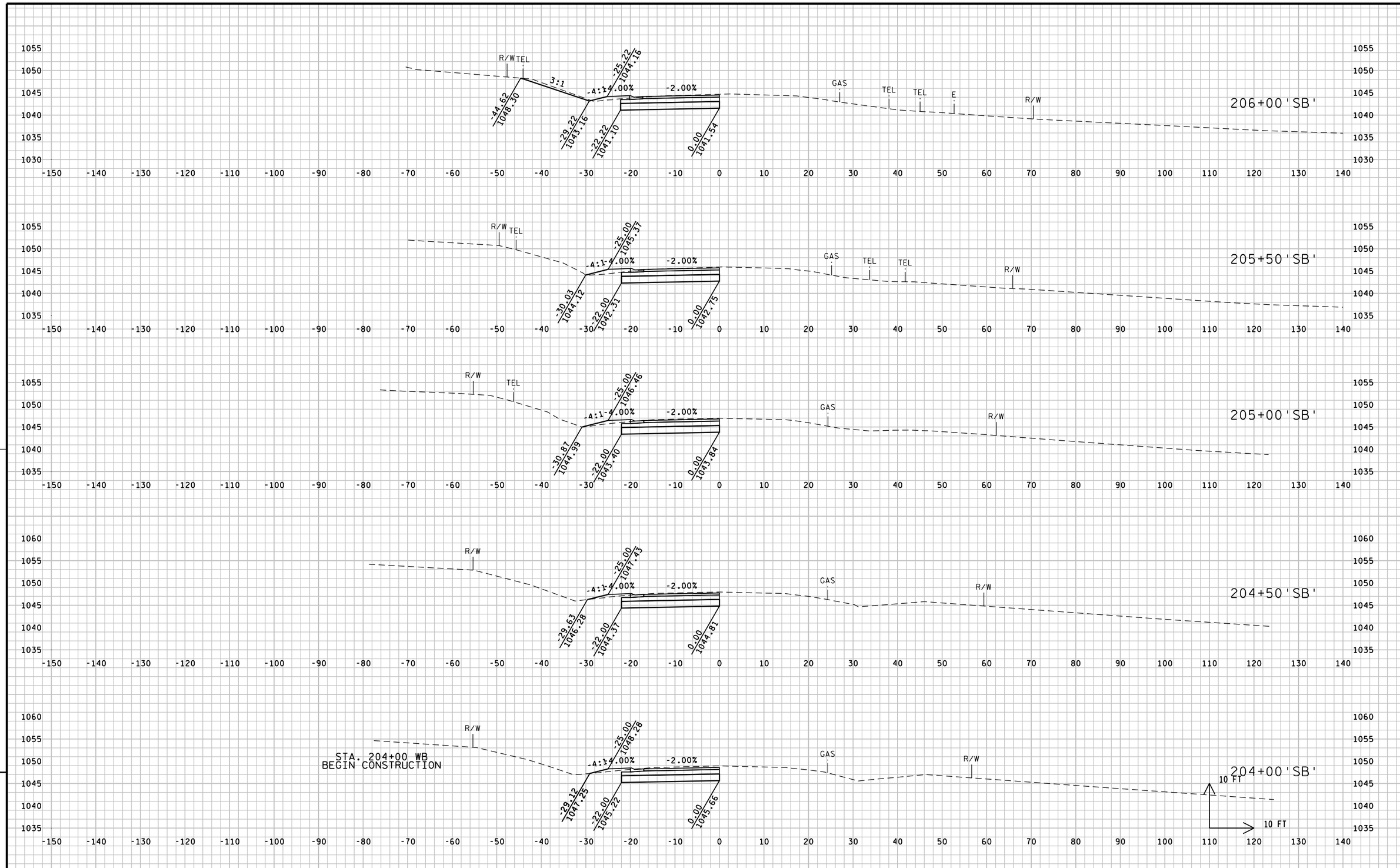

9

9

PROJECT NO:3042-00-73	HWY:STH 60	COUNTY:DODGE	CROSS SECTIONS:SB CTH P	SHEET 199	E

FILE NAME : G:\2011\11981 STH 60 & CTH P Rubicon\Micros\InRoads\XSections\SB.dgn PLOT DATE : 7/19/2013 PLOT BY : O.R.E., Inc. PLOT NAME : PLOT SCALE : 20.0000 sf / in.

WISDOT/CADDS SHEET 21

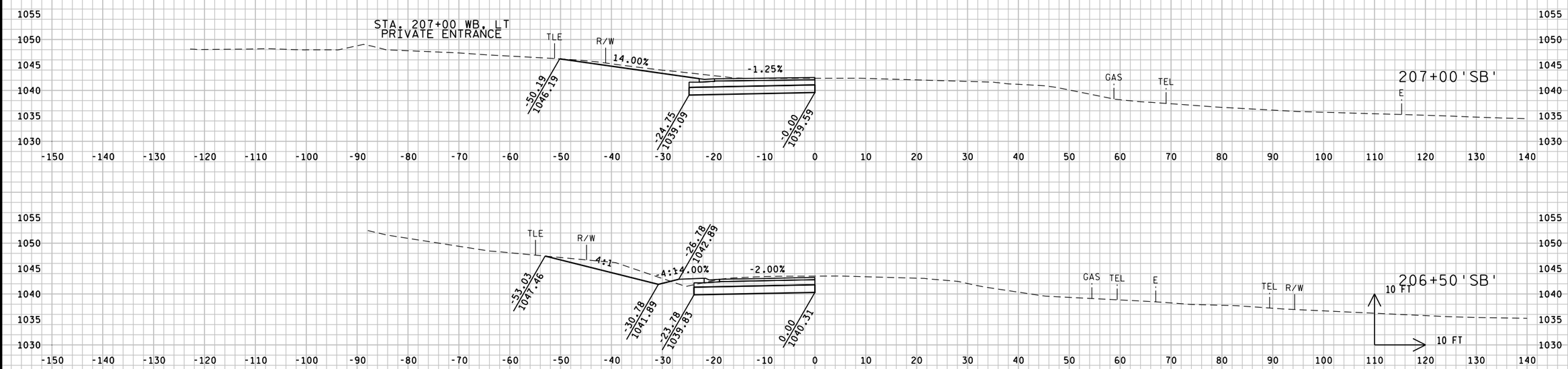

9

9

PROJECT NO:3042-00-73	HWY:STH 60	COUNTY:DODGE	CROSS SECTIONS:SB CTH P	SHEET 200	E

FILE NAME : G:\2011\11981 STH 60 & CTH P Rubicon\Micros\InRoads\XSections\SB.dgn PLOT DATE : 7/19/2013 PLOT BY : O.R.E., Inc. PLOT NAME : PLOT SCALE : 20.0000 sf / in.

WISDOT/CADDS SHEET 21

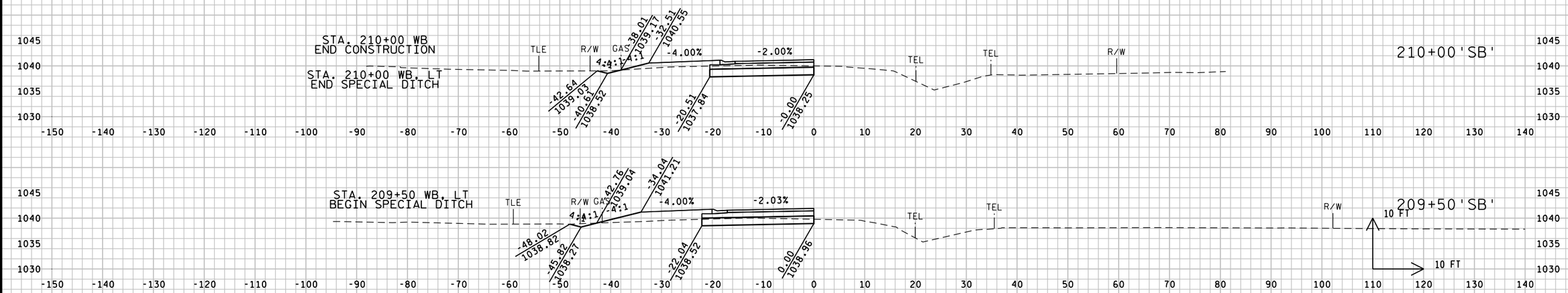

9

9

PROJECT NO:3042-00-73	HWY:STH 60	COUNTY:DODGE	CROSS SECTIONS:SB CTH P	SHEET 201	E

FILE NAME : G:\2011\11981 STH 60 & CTH P Rubicon\Micros\InRoads\XSections\SB.dgn PLOT DATE : 7/19/2013 PLOT BY : O.R.E., Inc. PLOT NAME : PLOT SCALE : 20.0000 sf / in.

WISDOT/CADDS SHEET 21

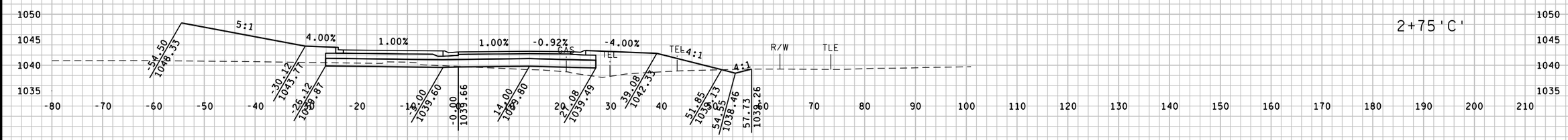

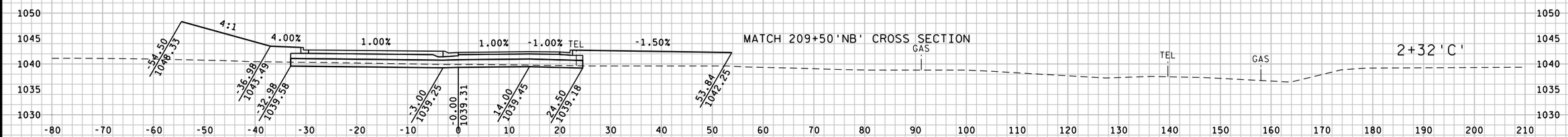

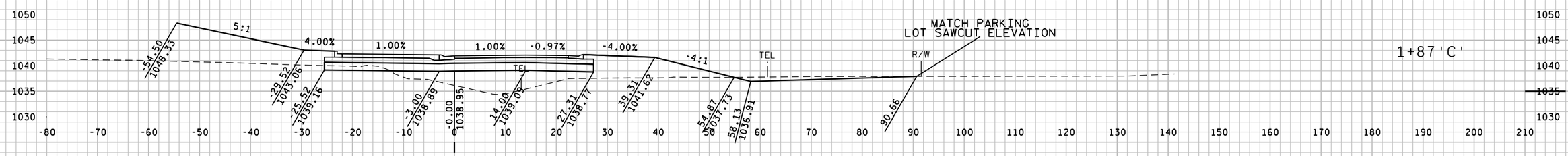

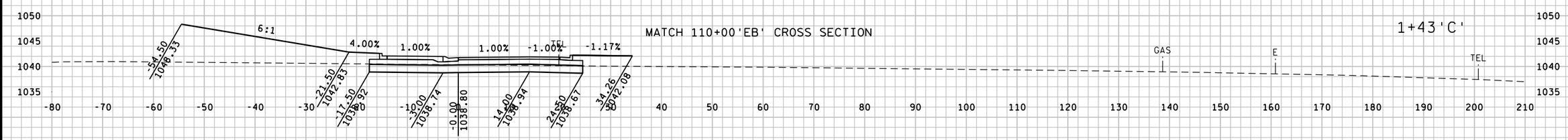

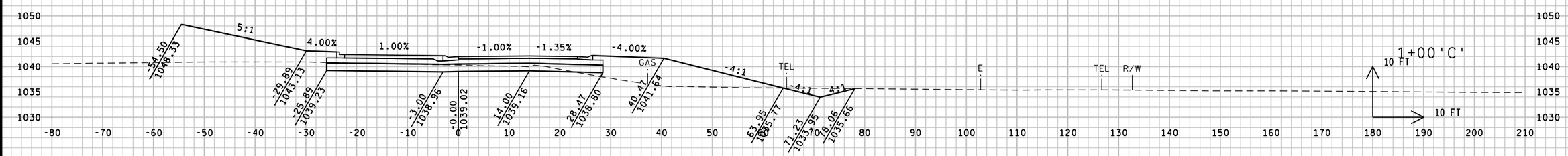

9

9

PROJECT NO:3042-00-73	HWY:STH 60	COUNTY:DODGE	CROSS SECTIONS:CIRCLE	SHEET 202	E

FILE NAME : G:\2011\11981 STH 60 & CTH P Rubicon\Micros\InRoads\XSections\Roundabout Circle.dgn PLOT DATE : 7/19/2013 PLOT BY : O.R.E., Inc. PLOT NAME : PLOT SCALE : 20.0000 sf / in.

WISDOT/CADDS SHEET 21

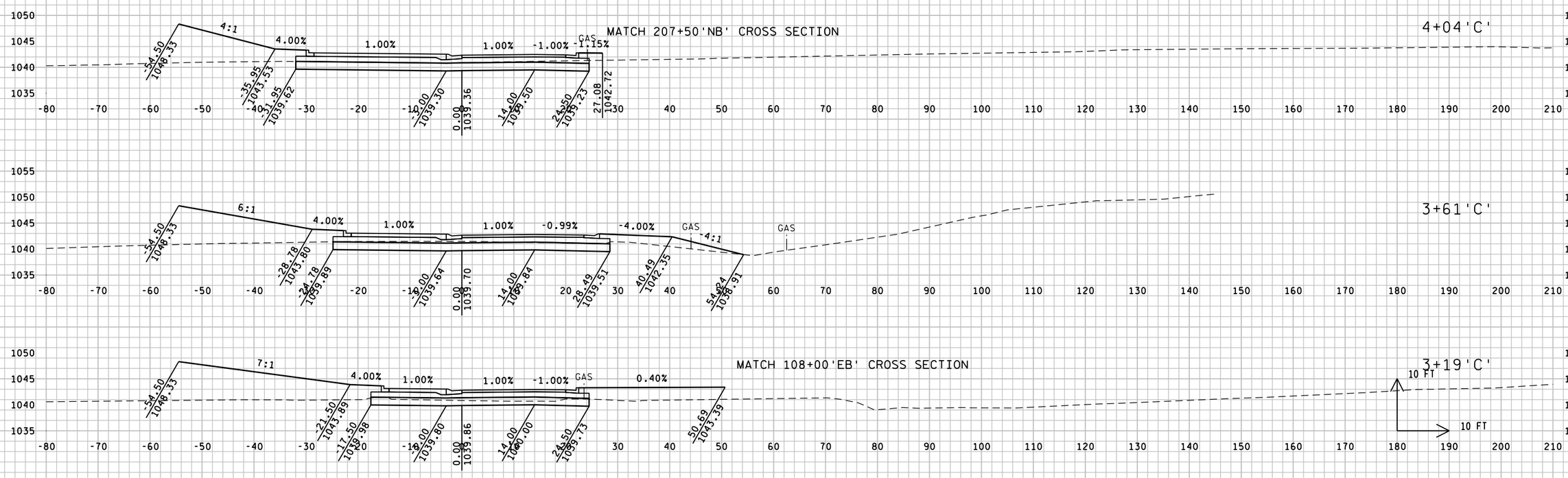

PROJECT NO:3042-00-73	HWY:STH 60	COUNTY:DODGE	CROSS SECTIONS:CIRCLE	SHEET 203	E

FILE NAME : G:\2011\11981 STH 60 & CTH P Rubicon\Micros\InRoads\XSections\Roundabout Circle.dgn PLOT DATE : 7/19/2013 PLOT BY : O.R.E., Inc. PLOT NAME : PLOT SCALE : 20.0000 sf / in.

WISDOT/CADDS SHEET 21

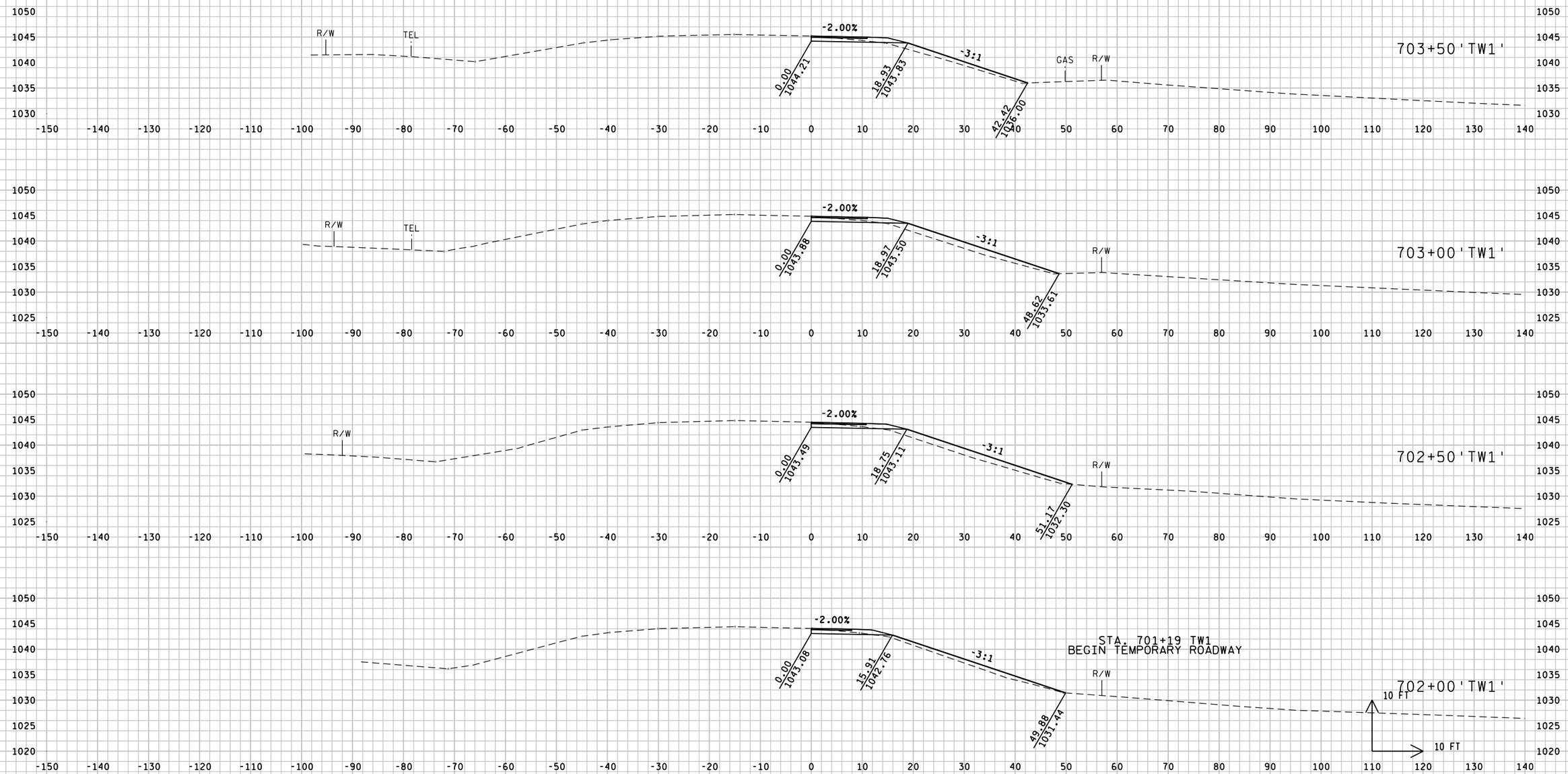

PROJECT NO:3042-00-73	HWY:STH 60	COUNTY:DODGE	CROSS SECTIONS: TW1	SHEET 204	E

FILE NAME : G:\2011\11981 STH 60 & CTH P Rubicon\Micros\InRoads\XSections\TW1.dgn PLOT DATE : 7/19/2013 PLOT BY : O.R.E., Inc. PLOT NAME : PLOT SCALE : 20.0000 sf / in. WISDOT/CADDS SHEET 21

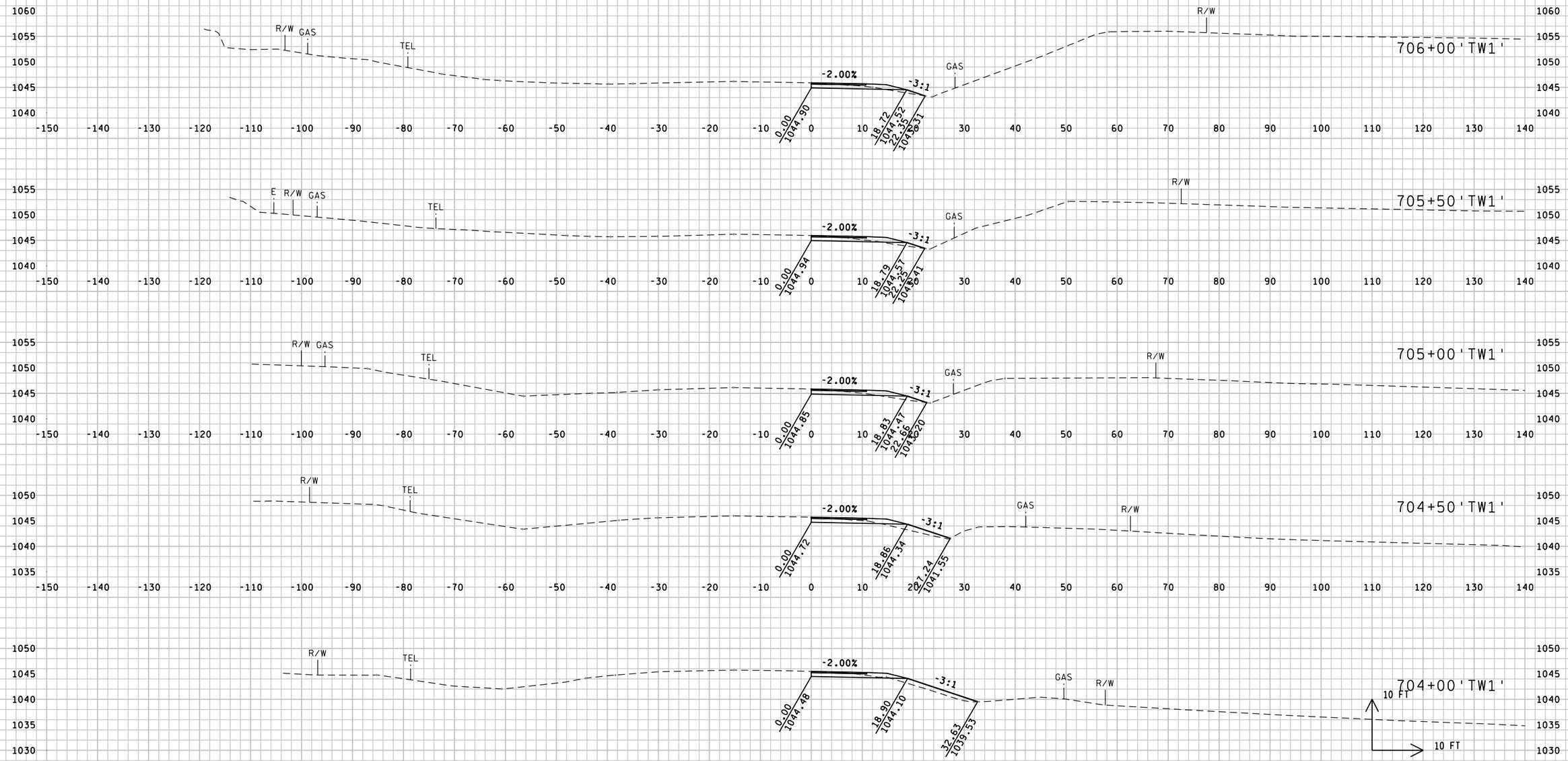

9

9

PROJECT NO:3042-00-73	HWY:STH 60	COUNTY:DODGE	CROSS SECTIONS: TW1	SHEET 205	E

FILE NAME : G:\2011\11981 STH 60 & CTH P Rubicon\Micros\InRoads\XSections\TW1.dgn PLOT DATE : 7/19/2013 PLOT BY : O.R.E., Inc. PLOT NAME : PLOT SCALE : 20.0000 sf / in.

WISDOT/CADDS SHEET 21

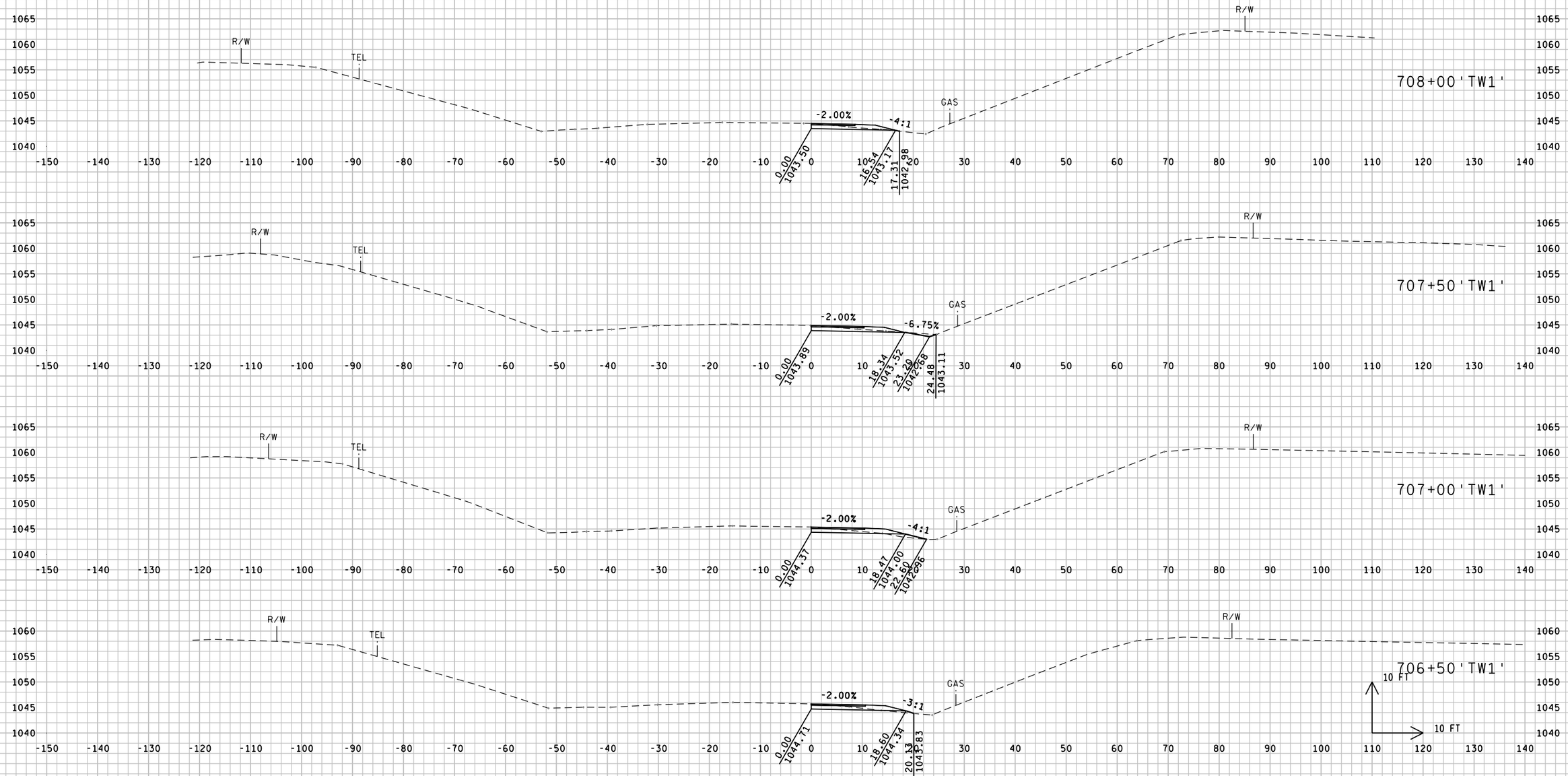

PROJECT NO:3042-00-73	HWY:STH 60	COUNTY:DODGE	CROSS SECTIONS: TW1	SHEET 206	E

FILE NAME : G:\2011\11981 STH 60 & CTH P Rubicon\Micros\InRoads\XSections\TW1.dgn PLOT DATE : 7/19/2013 PLOT BY : O.R.E., Inc. PLOT NAME : PLOT SCALE : 20.0000 sf / in.

WISDOT/CADDS SHEET 21

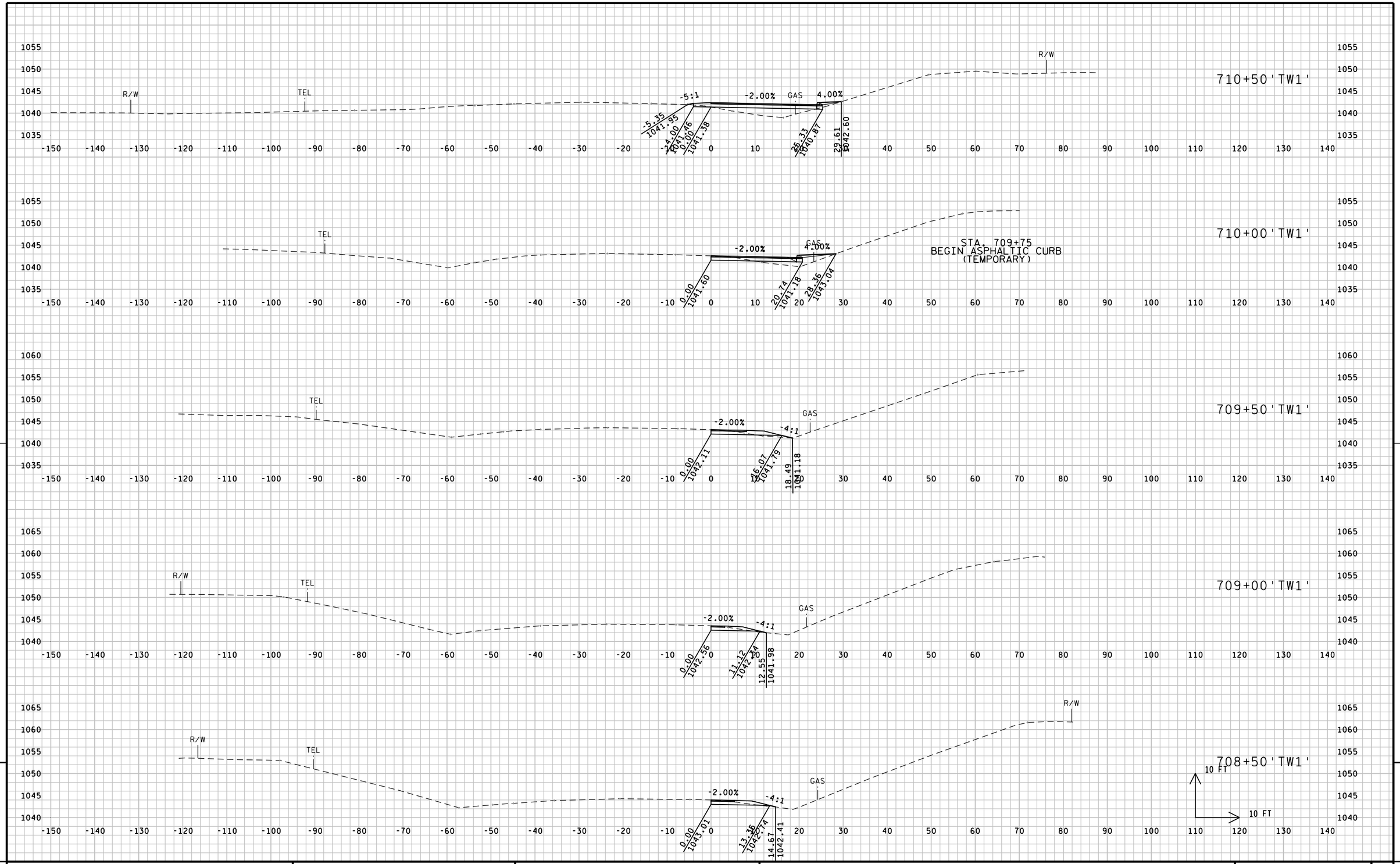

9

9

PROJECT NO:3042-00-73	HWY:STH 60	COUNTY:DODGE	CROSS SECTIONS:TW1	SHEET 207	E

FILE NAME : G:\2011\11981 STH 60 & CTH P Rubicon\Micros\InRoads\XSections\TW1.dgn PLOT DATE : 7/19/2013 PLOT BY : O.R.E., Inc. PLOT NAME : PLOT SCALE : 20.0000 sf / in.

WISDOT/CADDS SHEET 21

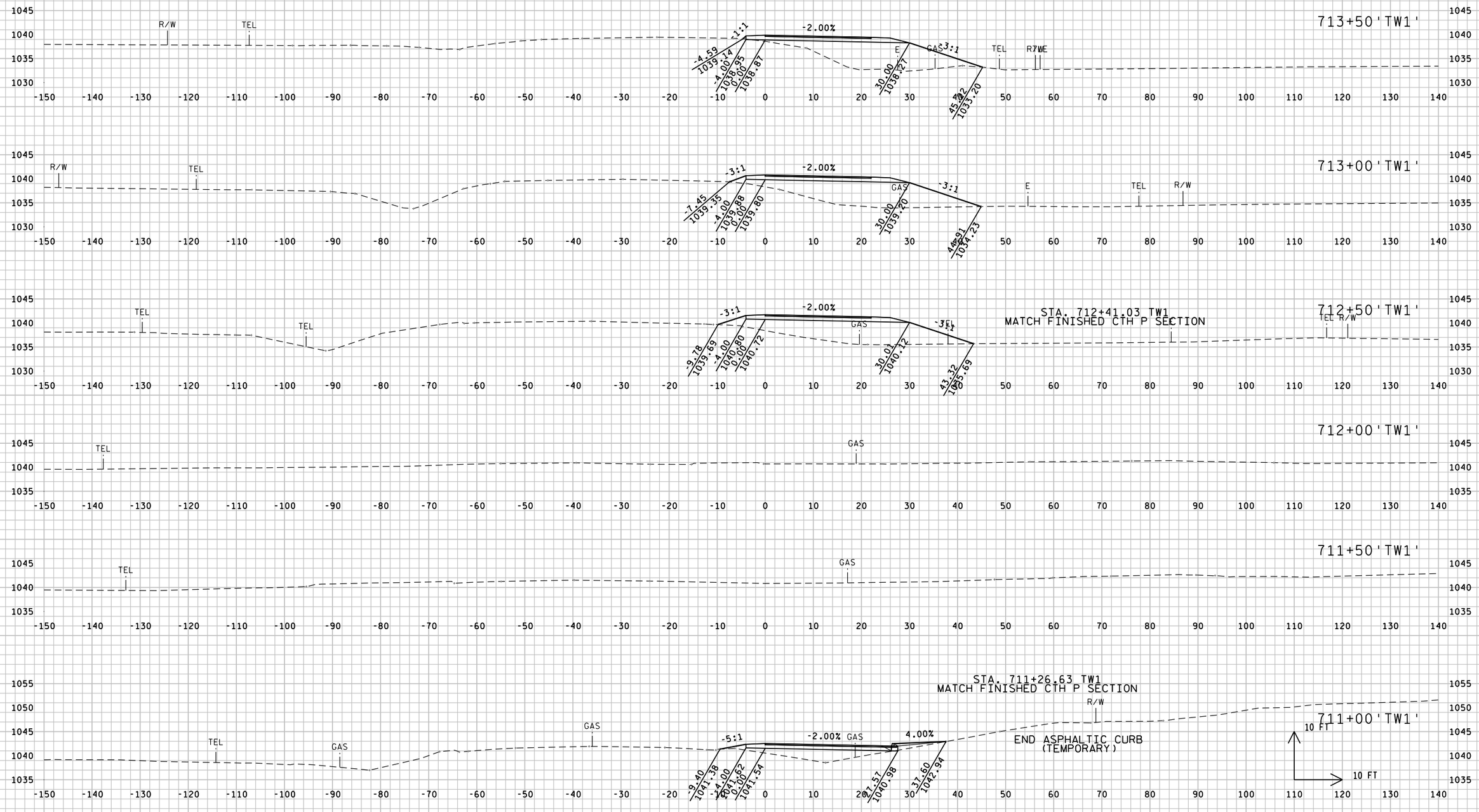

PROJECT NO:3042-00-73	HWY:STH 60	COUNTY:DODGE	CROSS SECTIONS: TW1	SHEET 208	E

FILE NAME : G:\2011\11981 STH 60 & CTH P Rubicon\Micros\InRoads\XSections\TW1.dgn PLOT DATE : 7/19/2013 PLOT BY : O.R.E., Inc. PLOT NAME : PLOT SCALE : 20.0000 sf / in. WISDOT/CADDS SHEET 21

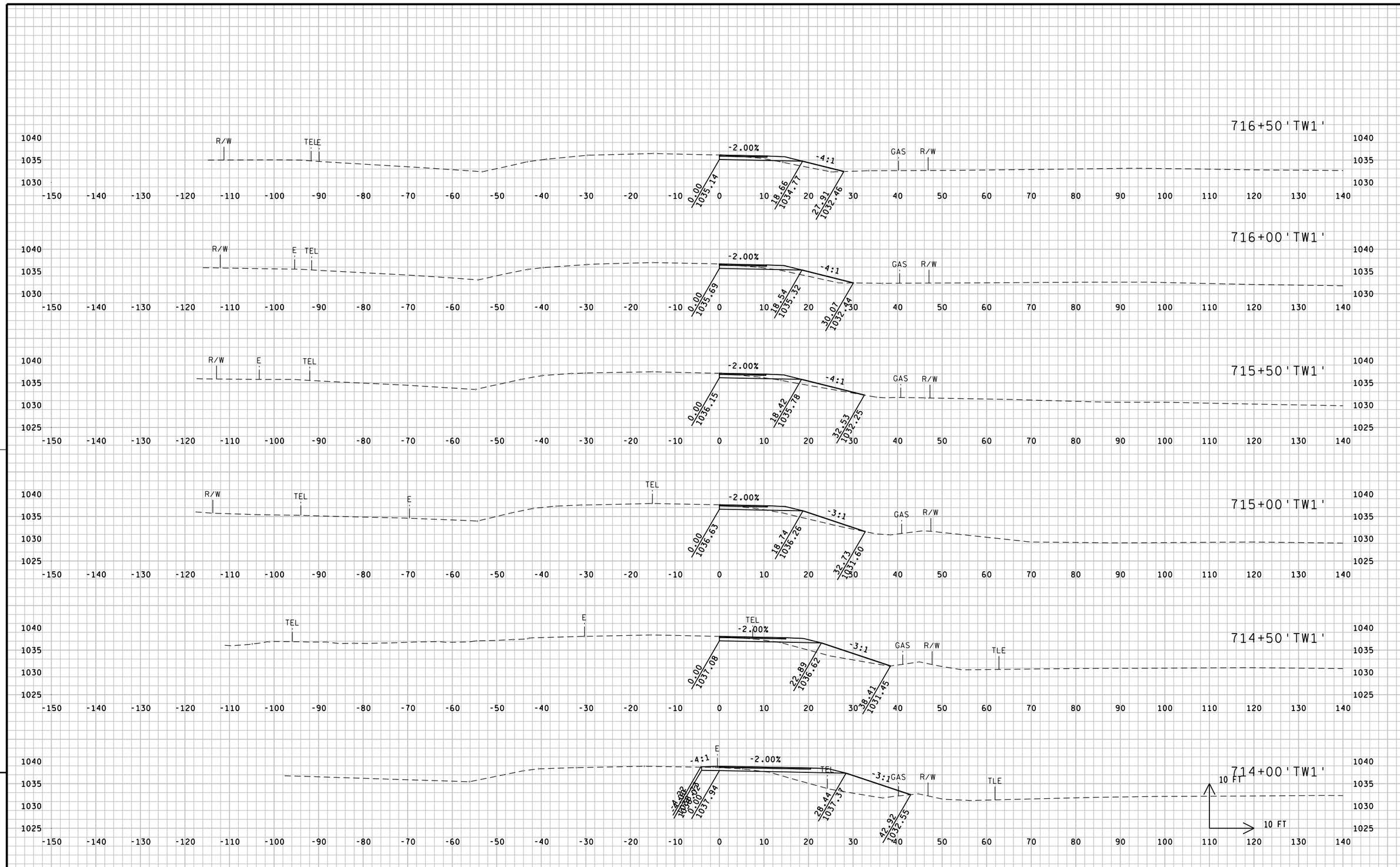

9

9

PROJECT NO:3042-00-73	HWY:STH 60	COUNTY:DODGE	CROSS SECTIONS: TW1	SHEET 209	E

FILE NAME : G:\2011\11981 STH 60 & CTH P Rubicon\Micros\InRoads\XSections\TW1.dgn PLOT DATE : 7/19/2013 PLOT BY : O.R.E., Inc. PLOT NAME : PLOT SCALE : 20.0000 sf / in.

WISDOT/CADDS SHEET 21

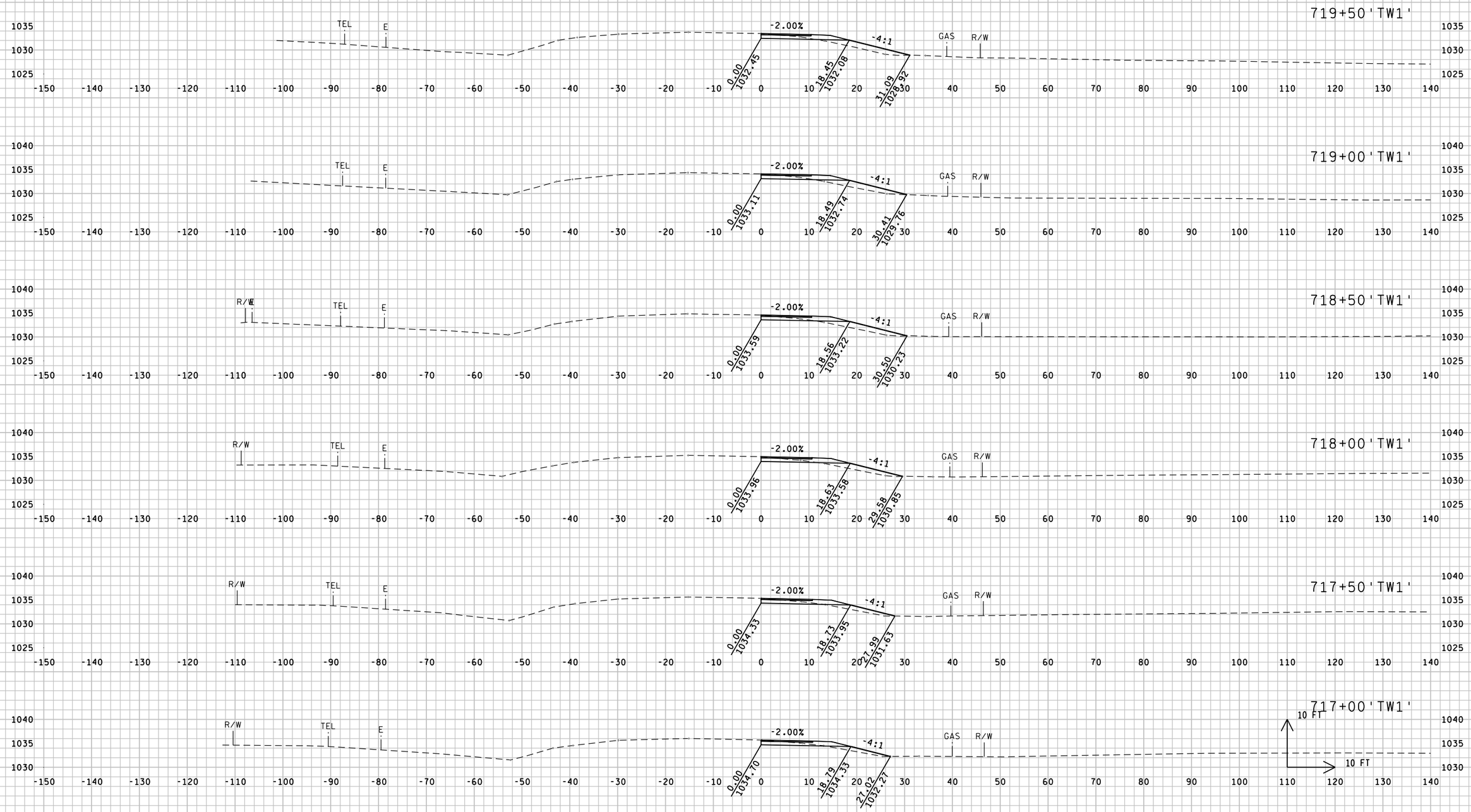

9

9

PROJECT NO:3042-00-73	HWY:STH 60	COUNTY:DODGE	CROSS SECTIONS: TW1	SHEET 210	E

FILE NAME : G:\2011\11981 STH 60 & CTH P Rubicon\Micros\InRoads\XSections\TW1.dgn PLOT DATE : 7/19/2013 PLOT BY : O.R.E., Inc. PLOT NAME : PLOT SCALE : 20.0000 sf / in. WISDOT/CADDS SHEET 21

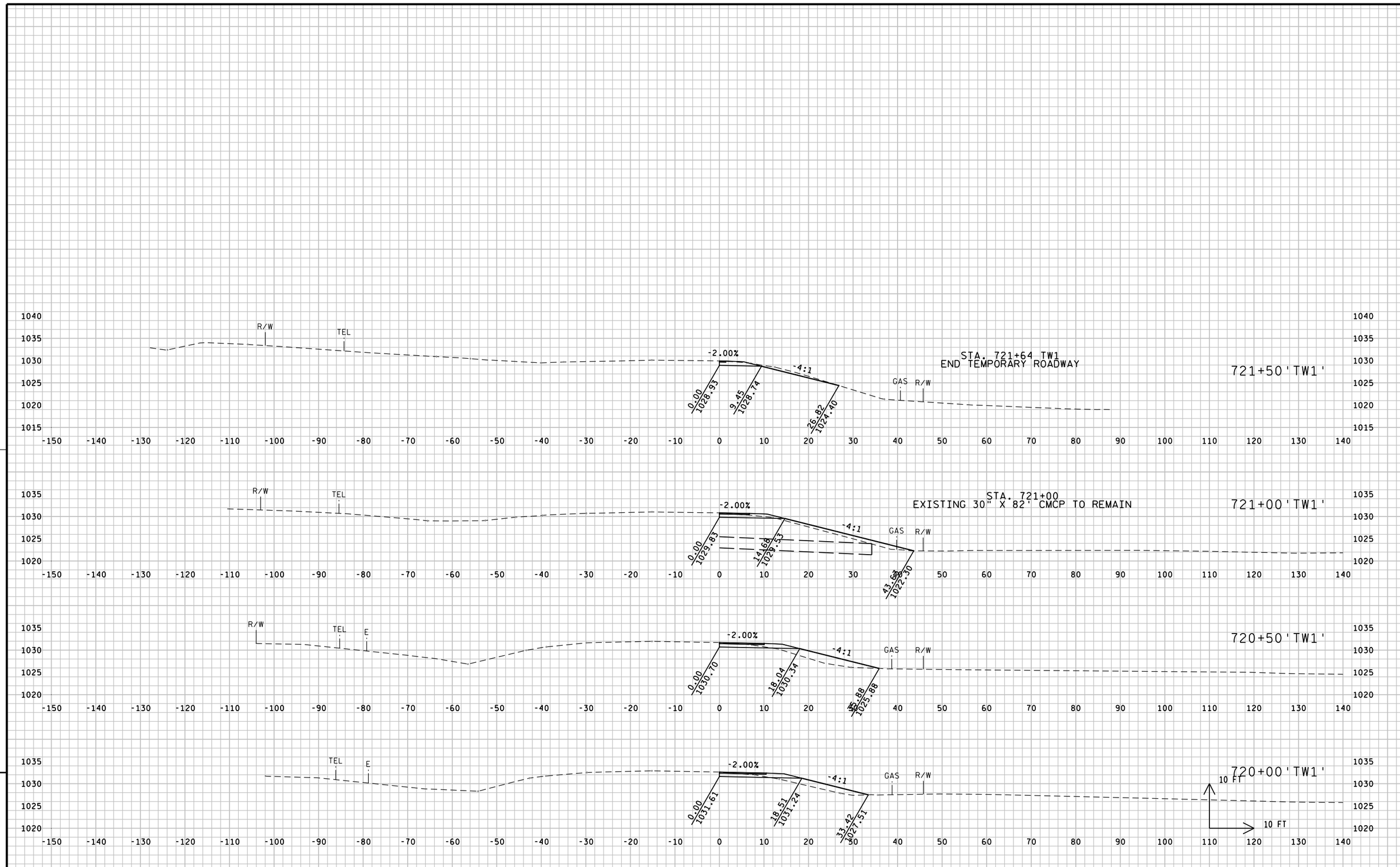

PROJECT NO:3042-00-73	HWY:STH 60	COUNTY:DODGE	CROSS SECTIONS: TW1	SHEET 211	E

FILE NAME : G:\2011\11981 STH 60 & CTH P Rubicon\Micros\InRoads\XSections\TW1.dgn PLOT DATE : 7/19/2013 PLOT BY : O.R.E., Inc. PLOT NAME : PLOT SCALE : 20.0000 sf / in. WISDOT/CADDS SHEET 21

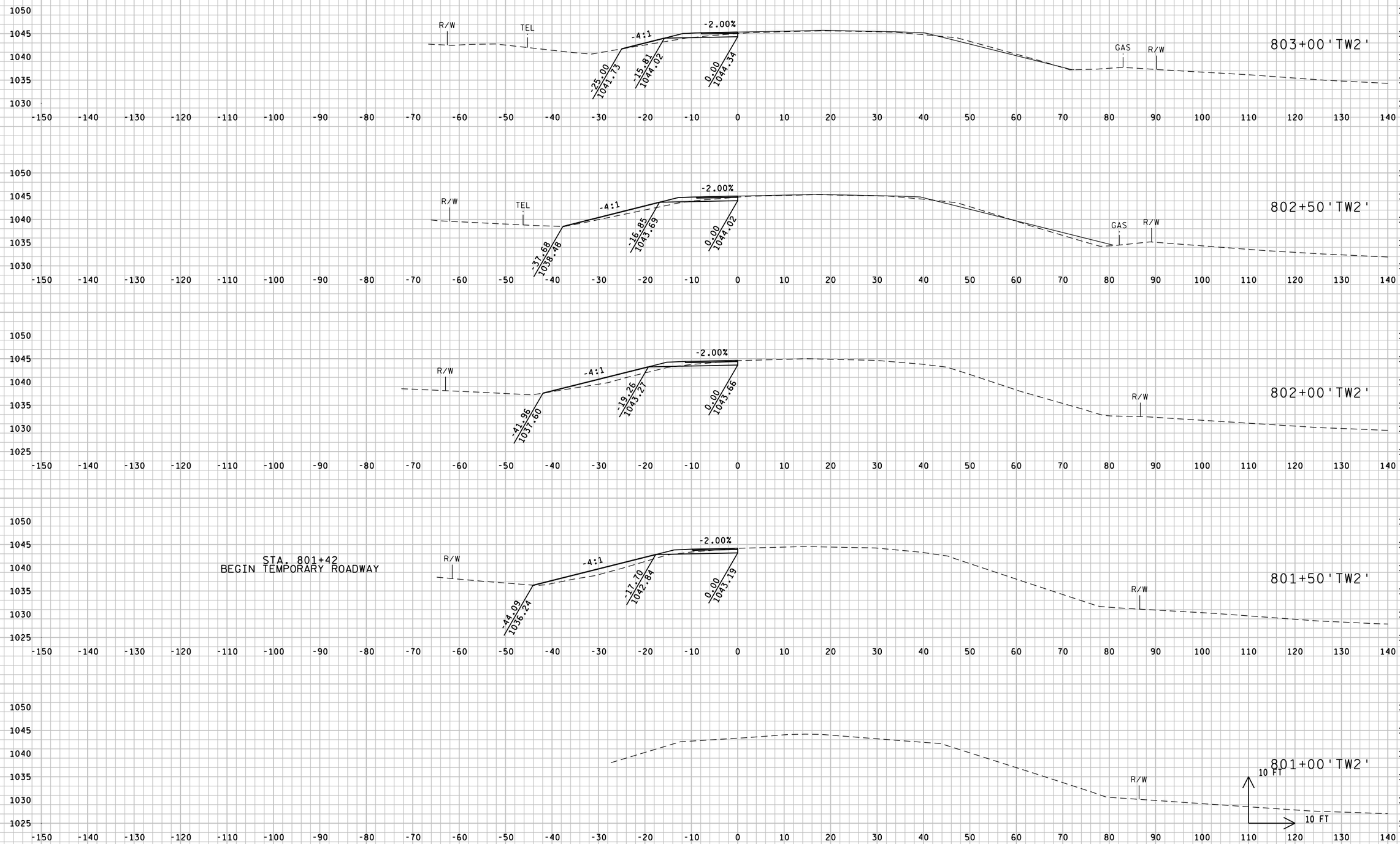

PROJECT NO:3042-00-73	HWY:STH 60	COUNTY:DODGE	CROSS SECTIONS: TW2	SHEET 212	E

FILE NAME : G:\2011\11981 STH 60 & CTH P Rubicon\Micros\InRoads\XSections\TW2.dgn PLOT DATE : 7/19/2013 PLOT BY : O.R.E., Inc. PLOT NAME : PLOT SCALE : 20.0000 sf / in. WISDOT/CADDS SHEET 21

9 9

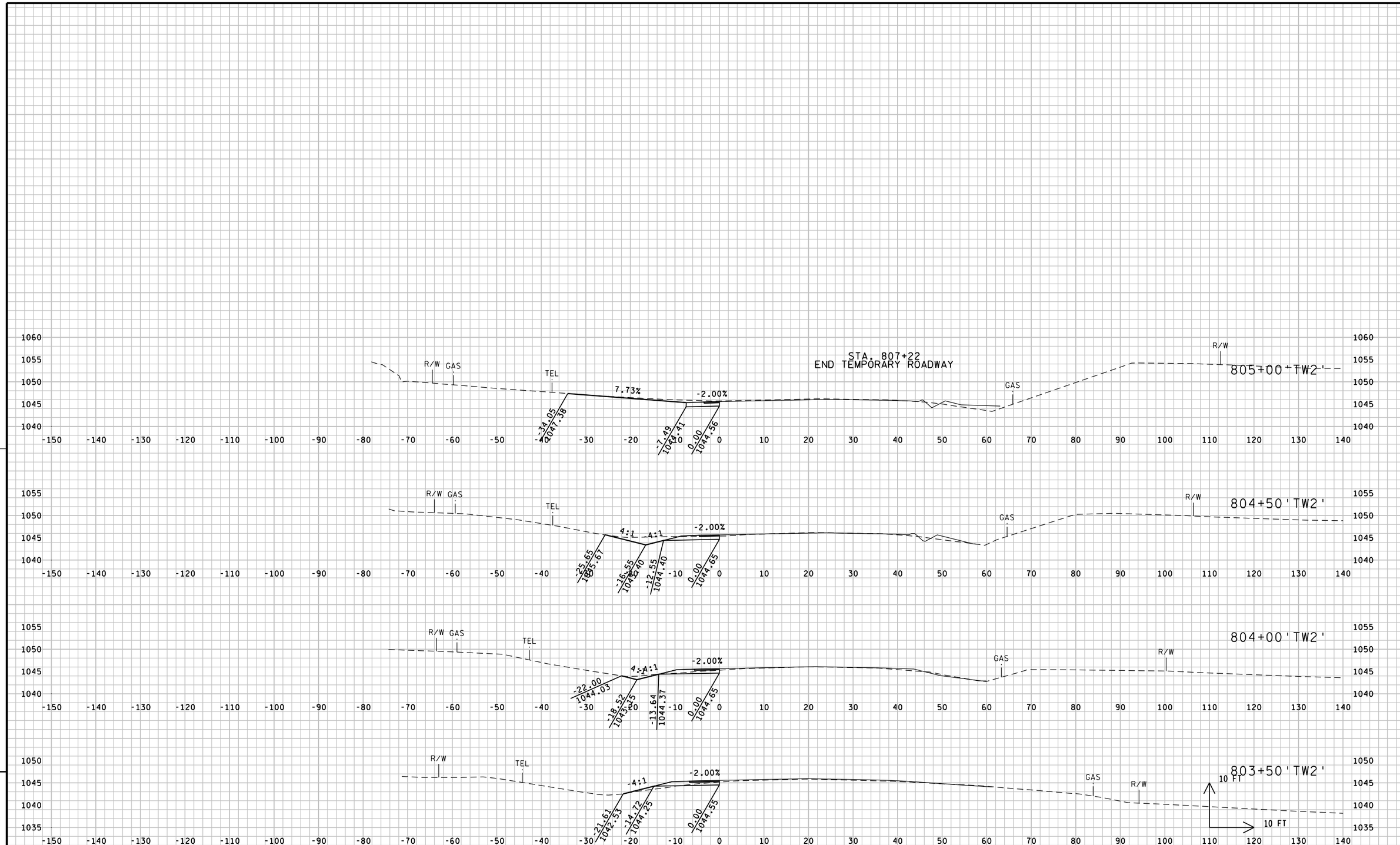

PROJECT NO:3042-00-73	HWY:STH 60	COUNTY:DODGE	CROSS SECTIONS: TW2	SHEET 213	E

FILE NAME : G:\2011\11981 STH 60 & CTH P Rubicon\Micros\InRoads\XSections\TW2.dgn PLOT DATE : 7/19/2013 PLOT BY : O.R.E., Inc. PLOT NAME : PLOT SCALE : 20.0000 sf / in. WISDOT/CADDS SHEET 21

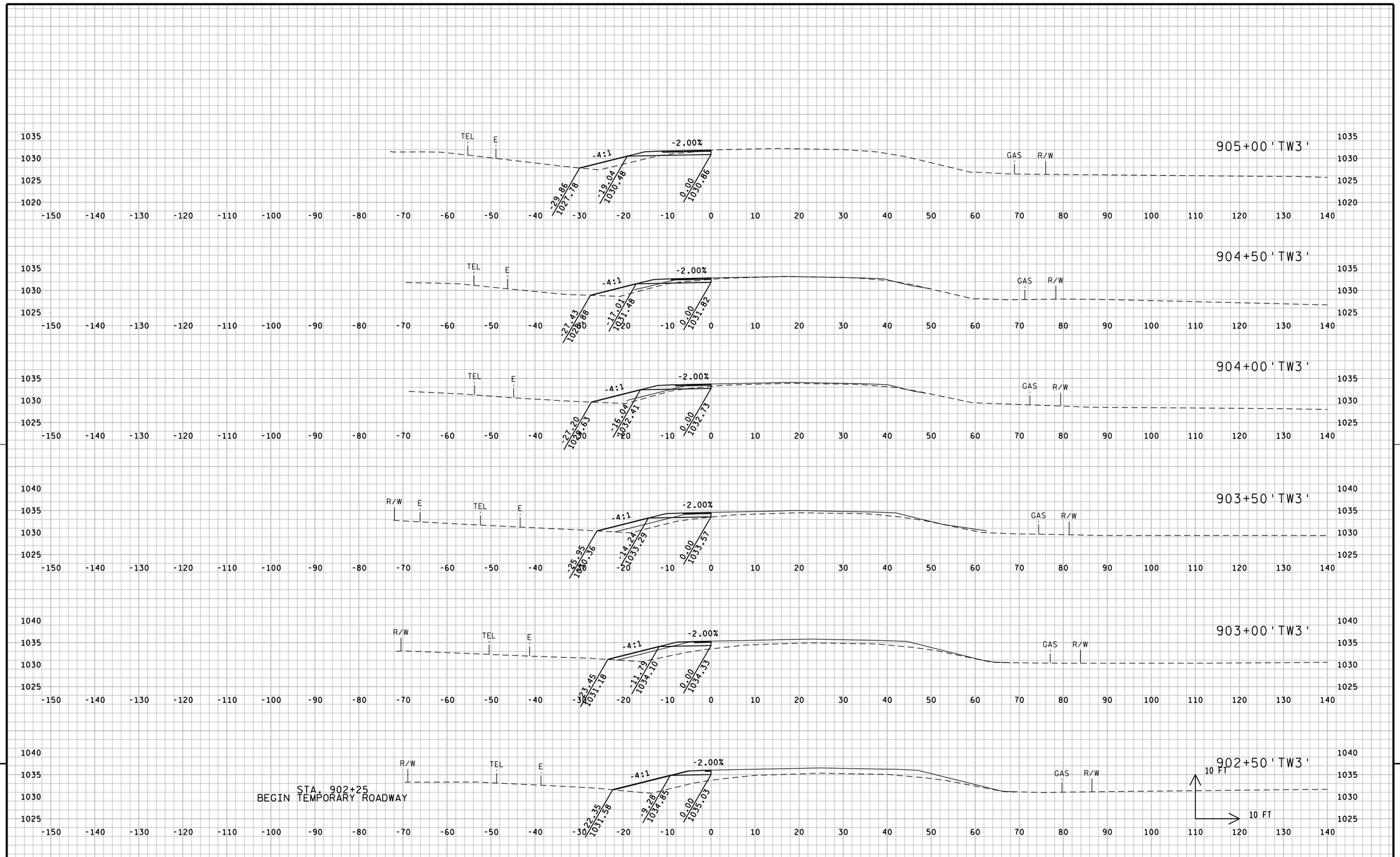

PROJECT NO:3042-00-73	HWY:STH 60	COUNTY:DODGE	CROSS SECTIONS: TW3	SHEET 214	E

FILE NAME : G:\2011\11981 STH 60 & CTH P Rubicon\Micros\InRoads\XSections\TW3.dgn PLOT DATE : 7/19/2013 PLOT BY : O.R.E., Inc. PLOT NAME : PLOT SCALE : 20.0000 sf / in. WISDOT/CADDS SHEET 21

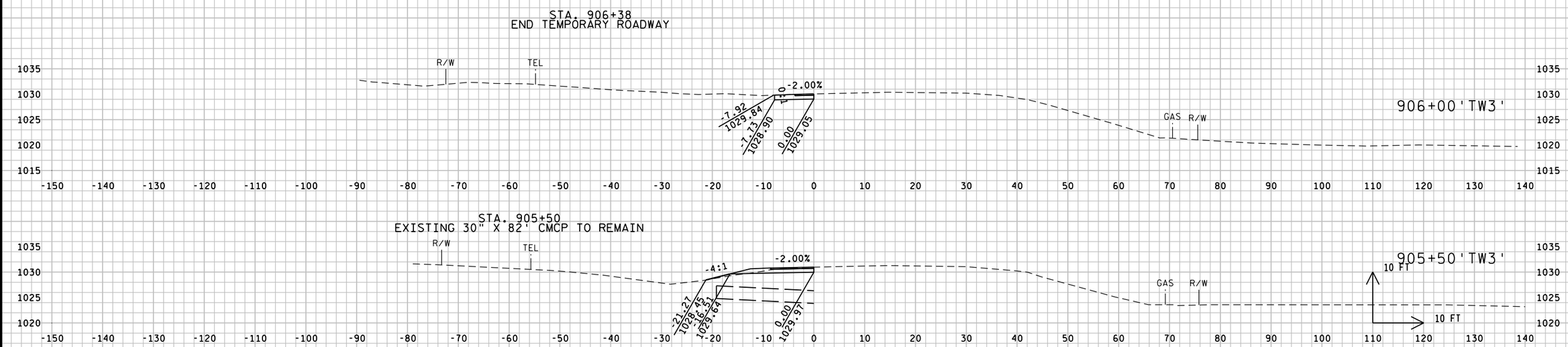

9

9

PROJECT NO:3042-00-73	HWY:STH 60	COUNTY:DODGE	CROSS SECTIONS: TW3	SHEET 215	E

FILE NAME : G:\2011\11981 STH 60 & CTH P Rubicon\Micros\InRoads\XSections\TW3.dgn PLOT DATE : 7/19/2013 PLOT BY : O.R.E., Inc. PLOT NAME : PLOT SCALE : 20.0000 sf / in.

WISDOT/CADDS SHEET 21

Wisconsin Department of Transportation

Dedicated people creating transportation solutions through innovation and exceptional service.

http://www.dot.wisconsin.gov