EAU SEPTEMBER 2013

PROJECT ID: 1530-07-62
WITH: N/A

COUNTY: PIERCE

ORDER OF SHEETS

Section No.	1	Title
Section No.	2	Typical Sections and Details
Section No.	3	Estimate of Quantities
Section No.	3	Miscellaneous Quantities
~~Section No.~~	~~4~~	~~Right of Way Plat~~
Section No.	5	Plan and Profile
Section No.	6	Standard Detail Drawings
Section No.	7	Sign Plates
Section No.	8	Structure Plans
Section No.	9	Computer Earthwork Data
Section No.	9	Cross Sections

TOTAL SHEETS = 258

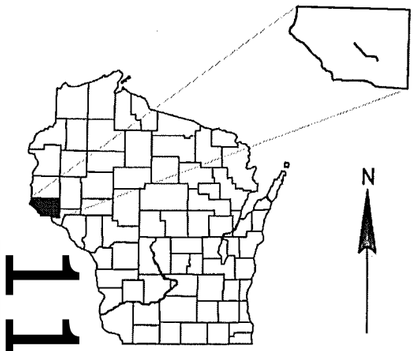

DESIGN DESIGNATION

A.A.D.T. 2012	=	1800 - 2700
A.A.D.T. 2033	=	2300 - 3300
D.H.V.	=	300 - 440
D.D.	=	60/40
T.	=	15.8%
DESIGN SPEED	=	55 MPH
ESALS	=	934,400

BEGIN PROJECT 1530-07-62
STA. 50+11.90
Y = 337,369.998
X = 1,331,362.687

CONVENTIONAL SYMBOLS

PLAN
- CORPORATE LIMITS
- PROPERTY LINE
- LOT LINE
- LIMITED HIGHWAY EASEMENT
- EXISTING RIGHT OF WAY
- PROPOSED OR NEW R/W LINE
- SLOPE INTERCEPT
- REFERENCE LINE
- EXISTING CULVERT
- PROPOSED CULVERT (Box or Pipe)
- COMBUSTIBLE FLUIDS (CAUTION)
- MARSH AREA
- WOODED OR SHRUB AREA

PROFILE
- GRADE LINE
- ORIGINAL GROUND
- MARSH OR ROCK PROFILE (To be noted as such) (ROCK)
- SPECIAL DITCH (LABEL)
- GRADE ELEVATION (95.36)
- CULVERT (Profile View)

UTILITIES
- ELECTRIC (E)
- FIBER OPTIC (FO)
- GAS (G)
- SANITARY SEWER (SAN)
- STORM SEWER (SS)
- TELEPHONE (T)
- WATER (W)
- UTILITY PEDESTAL
- POWER POLE
- TELEPHONE POLE

STATE OF WISCONSIN
DEPARTMENT OF TRANSPORTATION

PLAN OF PROPOSED IMPROVEMENT

ELLSWORTH - DURAND
(USH 63 TO CTH A)
USH 10
PIERCE COUNTY

STATE PROJECT	FEDERAL PROJECT	
	PROJECT	CONTRACT
1530-07-62	WISC 2013426	1

STATE PROJECT NUMBER
1530-07-62

LAYOUT
SCALE 0 1 MI.

TOTAL NET LENGTH OF CENTERLINE = 8.445 MI.

"COORDINATES ON THIS PLAN ARE REFERENCED TO THE WISCONSIN STATE PLANE COORDINATE SYSTEM (WSPCS), CENTRAL ZONE."

Mead & Hunt

WISCONSIN
CHRISTOPHER M. ROSSMILLER
E-37423
De Pere, Wisconsin
PROFESSIONAL ENGINEER

05/01/2013

STATE OF WISCONSIN
DEPARTMENT OF TRANSPORTATION

PREPARED BY

Surveyor	MEAD & HUNT, INC.
Designer	MEAD & HUNT, INC.
Project Manager	WENDY MAVES, P.E.
Regional Examiner	DAN OJIBWAY, P.E.
Regional Supervisor	DAVID SOLBERG, P.E.
C.O. Examiner	

APPROVED FOR THE DEPARTMENT
DATE: 4/29/13 (Signature)

E

GENERAL NOTES

NO TREES OR SHRUBS SHALL BE REMOVED UNLESS SUCH TREES OR SHRUBS HAVE BEEN DESIGNATED FOR REMOVAL BY THE ENGINEER.

DISTURBED AREAS WITHIN THE RIGHT OF WAY ARE TO BE TOPSOIL, FERTILIZED, SEEDED AND EROSION MAT AS DIRECTED BY THE ENGINEER.

ALL PRIVATE DRIVEWAYS AND COMMERCIAL ENTRANCES SHALL BE RESTORED IN KIND. LIMITS TO BE DETERMINED BY THE ENGINEER.

WHEN PORTIONS OF THE EXISTING ASPHALTIC SURFACES ARE TO BE REMOVED TO ACCOMMODATE NEW CONSTRUCTION, THE LINE OF SUCH REMOVAL SHALL BE NEATLY DELINEATED WITH A SAW CUT JOINT THROUGH THE ASPHALTIC SURFACE SO THAT REMOVAL OF THE ASPHALT SHALL BE ACCOMPLISHED WITHOUT DAMAGE TO REMAINING PORTIONS. THE LOCATION OF SAW JOINTS AND THE AMOUNT REMOVED AT SIDE ROADS WILL BE DETERMINED IN THE FIELD BY THE ENGINEER.

PAVING LIMITS ARE TO BE DETERMINED BY THE ENGINEER.

LOCATION OF UNDERGROUND UTILITIES AS SHOWN ON THE PLAN ARE APPROXIMATE. THERE MAY BE OTHER UTILITY INSTALLATIONS WITHIN THE PROJECT AREA THAT ARE NOT SHOWN.

ALL RADII ARE MEASURED TO THE EDGE OF PAVEMENT UNLESS OTHERWISE NOTED ON THE PLAN.

CURVE DATA IS BASED ON THE ARC DEFINITION.

"ASPHALTIC SURFACE" ITEM IS TO BE USED FOR LEVELING/WEDGING AND SPOT REPAIR.

"ASPHALTIC SURFACE PATCHING" ITEM IS TO BE USED FOR RAMPING AT BUTT JOINT SAW CUTS, MISCELLANEOUS REPAIRS OF POTHOLES AND POPOUTS THAT OCCUR DURING CONSTRUCTION.

"PREPARING OF FOUNDATION FOR ASPHALTIC PAVING SPECIAL" ITEM IS ASSOCIATED WITH THE WORK FOR THE "ASPHALTIC SURFACE " AND ASPHALTIC SURFACE PATCHING" ITEMS.

PRIOR TO THE PLACEMENT OF STEEL PLATE BEAM GUARD, THE SHOULDERS SHALL BE IN PLACE , SHAPED AND COMPACTED UNLESS SHOWN OTHERWISE.

SHAPING AND COMPACTING EXISTING SHOULDER MATERIAL PRIOR TO ADDING NEW SHOULDER SHOULDER MATERIAL, SHAPING AND COMPACTING GRAVEL SIDE ROADS, EXCAVATION, SHAPING AND DISPOSAL OF EXCESS MATERIAL AND REMOVAL OF EXISTING ASPHALTIC SURFACE TO NECESSARY LENGTHS AND DEPTHS AS DIRECTED BY THE ENGINEER SHALL BE INCLUDED IN THE BID ITEM "PREPARING OF FOUNDATION FOR ASPHALTIC PAVING SPECIAL".

ALL DRIVEWAYS ARE TO BE ADJUSTED TO MATCH THE NEW MAINLINE PROFILE (SEE CONSTRUCTION DETAILS)

THE EROSION CONTROL FEATURES AS SHOWN ON THE PLAN DETAILS ARE AT SUGGESTED LOCATIONS, THEIR EXACT LOCATIONS WILL BE DETERMINED IN THE FIELD BY THE ENGINEER.

ELEVATIONS SHOWN ON THE PLAN ARE BASED NAV88.

OTHER WETLANDS MAY EXIST IN LOCATIONS THAT ARE NOT SHOWN IN THE PLANS. DO NOT STAGE IN OR DISTURB WETLANDS AREAS.

WHEN THE QUANTITY OF BASE AGGREGATE OR HMA PAVEMENT IS MEASURED FOR PAYMENT BY THE TON, THE DEPTH OR THICKNESS OF THE LAYER SHOWN ON THE PLANS IS APPROXIMATE AND THE ACTUAL THICKNESS WILL DEPEND ON THE DISTRIBUTION OF THE MATERIAL AS DIRECTED BY THE ENGINEER.

PRIOR TO REMOVING CURB & GUTTER, FIELD SURVEY THE EXISTING LOCATIONS AND ELEVATIONS. USE THE EXISTING LOCATIONS TO ESTABLISH THE NEW CURBS, ADJUST THE ELEVATIONS TO ACCOMMODATE THE NEW FINISHED PAVEMENT ELEVATIONS. COSTS ASSOCIATED WITH SURVEYING THE EXISTING CURB LOCATIONS ARE INCIDENTAL TO BID ITEM "CONSTRUCTION STAKING RESURFACING REFERENCE".

THE PROPOSED SHOULDER WIDTHS SHOWN IN THE TYPICAL SECTIONS ARE MINIMUM WIDTH. PERPETUATE EXISTING SHOULDERS THAT ARE WIDER THAN WHAT IS SHOWN IN THE TYPICAL SECTION.

STANDARD ABBREVIATIONS

ADT	AVERAGE DAILY TRAFFIC
AGG	AGGREGATE
ASPH	ASPHALTIC
BM	BENCH MARK
BOC	BACK OF CURB
C&G	CURB AND GUTTER
CE	COMMERCIAL ENTRANCE
CL	CENTERLINE
CWT	HUNDREDWEIGHT
CY	CUBIC YARD
DHV	DESIGN HOURLY VOLUME
DWY	DRIVEWAY
EL	ELEVATION
EXC	EXCAVATION
FT	FOOT
FTG	FOOTING
HYD	HYDRANT
INV	INVERT
LB	POUND
LF	LINEAR FOOT
LHF	LEFT-HAND FORWARD
LS	LUMP SUM
LT	LEFT
Mgal	MEGAGALLON
NO	NUMBER
PE	PRIVATE ENTRANCE
PI	POINT OF INTERSECTION
PL	PROPERTY LINE
QTY	QUANTITY
RHF	RIGHT-HAND FORWARD
RT	RIGHT
R/L	REFERENCE LINE
R/W	RIGHT-OF-WAY
SF	SQUARE FOOT
SHLDR	SHOULDER
SS	STORM SEWER
STA	STATION
SY	SQUARE YARD
T	TRUCKS (PERCENT OF)
TEL	TELEPHONE
TLE	TEMPORARY LIMITED EASEMENT
TYP	TYPICAL
UG	UNDERGROUND CABLE
VAR	VARIABLE
VC	VERTICAL CURVE
VPC	VERTICAL POINT OF CURVE
VPI	VERTICAL POINT OF INTERSECTION
VPT	VERTICAL POINT OF TANGENCY

ORDER OF SECTION 2 SHEETS

PROJECT OVERVIEW
TYPICAL SECTIONS
CONSTRUCTION DETAILS
EROSION CONTROL & DRAINAGE
SIGNING
PAVEMENT MARKING
TRAFFIC CONTROL
CONSTRUCTION STAGING

UTILITIES

CENTURYLINK – COMMUNICATION LINE
20 S WILSON AVE
RICE LAKE, WI 54868
ATTN: BRUCE F. LARSON
PHONE: (715) 234-5573

AT&T WISCONSIN – COMMUNICATION LINE
304 S DEWEY ST, 4TH FLOOR
EAU CLAIRE, WI 54701
ATTN: RICK PODOLAK
PHONE: (715) 893-5565

KOCH PIPELINE COMPANY L.P. – GAS/PETROLEUM
6483 85TH STREET
COTTAGE GROVE, MN 55016
ATTN: MICHAEL CARTER
PHONE: (651) 458-4842
MOBILE: (612) 214-4168
EMAIN: MICHAEL.CARTER@KOCHPIPELINE.COM

WE ENERGIES – GAS/PETROLEUM
104 W SOUTH ST
RICE LAKE, WI 54868
ATTN: LEWIS KNAPP
PHONE: (715) 234-9605
MOBILE: (715) 419-2196
EMAIL: LEWIS.KNAPP@WE-ENERGIES.COM

XCEL ENERGY – TRANSMISSION
P.O. BOX 8
EAU CLAIRE, WI 54702-0008
ATTN: KYLE NEIDERMIRE
PHONE: (715) 737-1576
MOBILE: (715) 450-6743
EMAIL: KYLE.S.NEIDERMIRE@XCELENERGY.COM

PIERCE-PEPIN ELECTRIC COOPERATIVE – ELECTRICITY
W7725 US HWY 10
P.O. BOX 420
ELLSWORTH, WI 54011
ATTN: BRADLEY RISTOW
PHONE: (715) 273-2473
MOBILE: (715) 307-1904
EMAIL: BRISTOW@PIERCEPEPIN.COM

XCEL ENERGY – ELECTRIC – GAS
1201 LIVINGSTONE RD
HUDSON, WI 54016
ATTN: DARREN NORDSKOG
PHONE: (715) 386-4798
MOBILE: (715) 410-3755
DARREN.M.NORDSKOG@XCELENERGY.COM

DNR

WISCONSIN DNR
1300 W CLAIRMONT AVE
P.O. BOX 4001
EAU CLAIRE, WI 54702-4001
ATTN: NICK SCHAFF
PHONE: (715) 839-1609

DIGGERS HOTLINE

Call 811 3 Work Days Before You Dig
or Toll Free (800) 242-8511
Hearing Impaired TDD (800) 542-2289
www.DiggersHotline.com

DESIGN CONSULTANT

Mead & Hunt

MEAD & HUNT, INC.
1345B NORTH ROAD
GREEN BAY, WI 54313
ATTN: CHRISTOPHER ROSSMILLER, P.E.
PHONE: (920) 496-0500
EMAIL: CHRISTOPHER.ROSSMILLER@MEADHUNT.COM

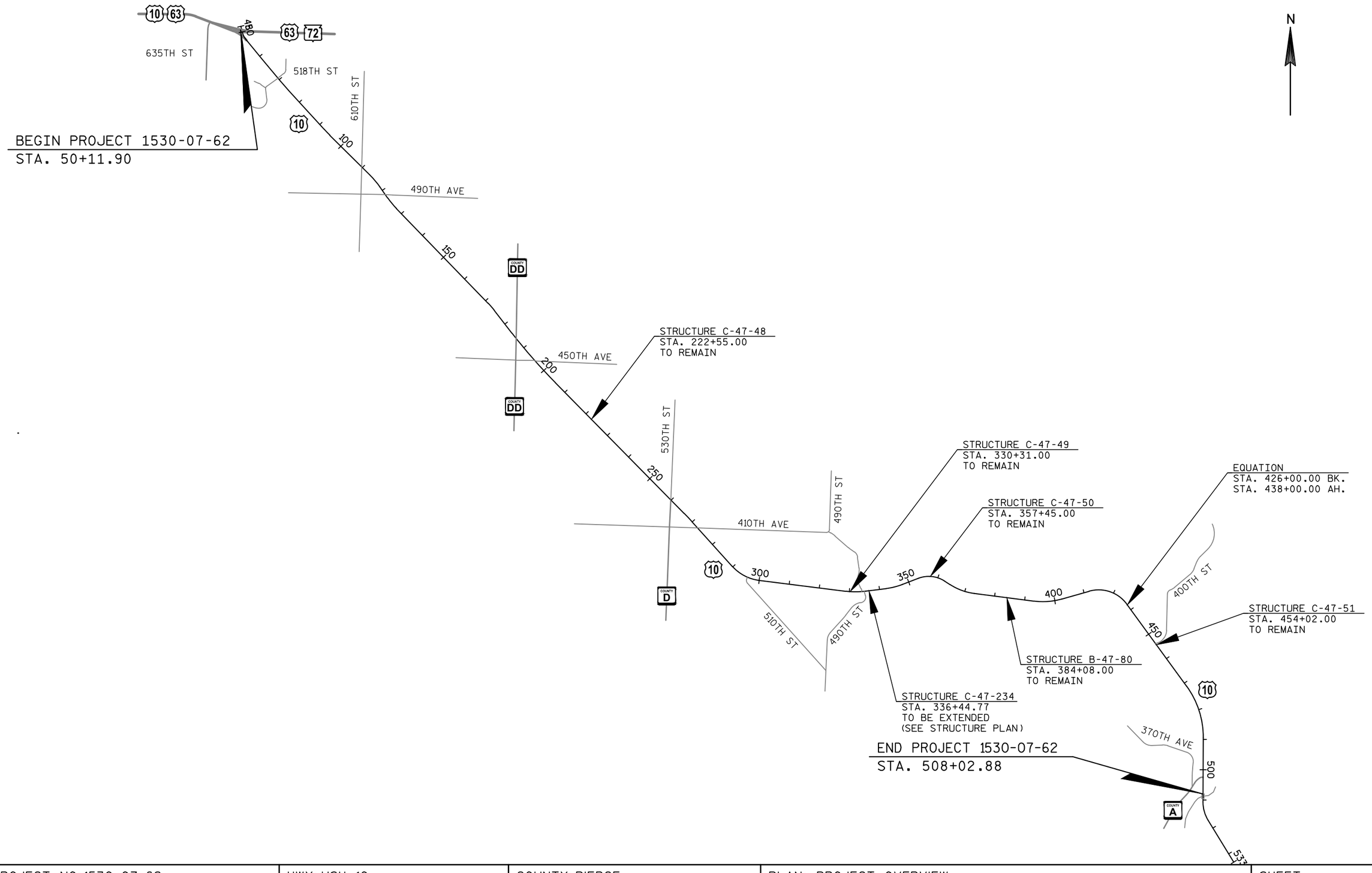

PROJECT NO: 1530-07-62	HWY: USH 10	COUNTY: PIERCE	PLAN: PROJECT OVERVIEW	SHEET 3	E

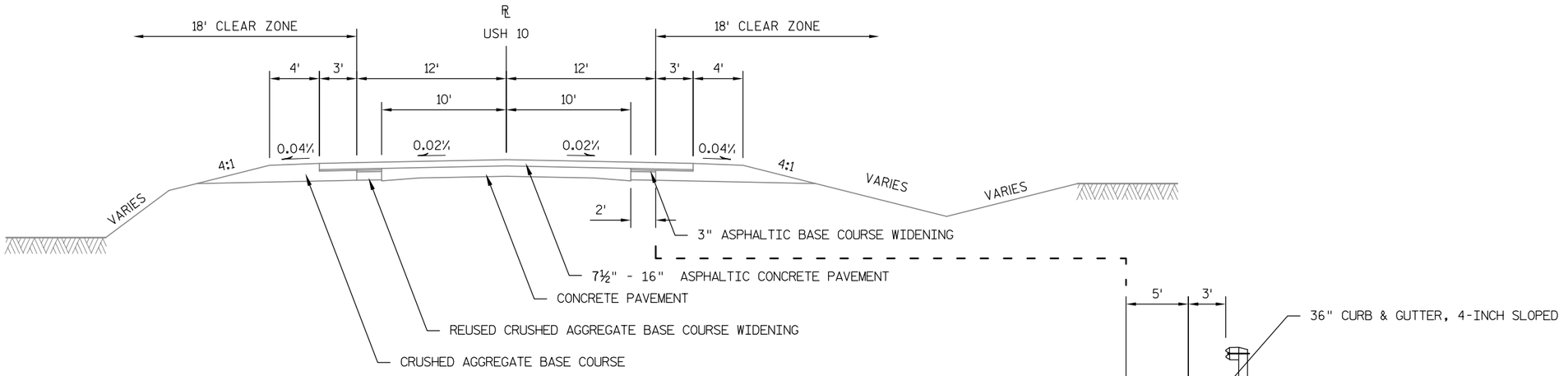

EXISTING TYPICAL SECTION

STA 50+11.90 TO STA 187+00
STA 209+00 TO STA 252+00

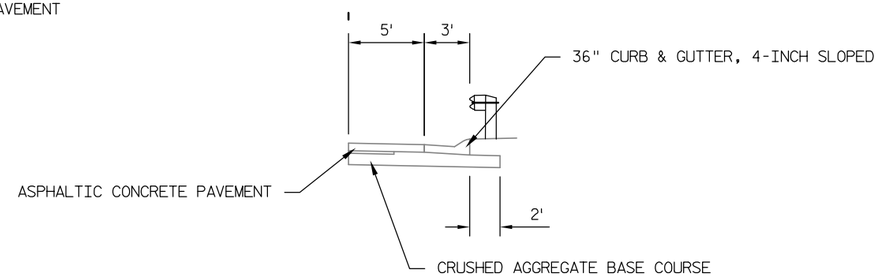

STA 114+06 TO STA 118+00 RT.

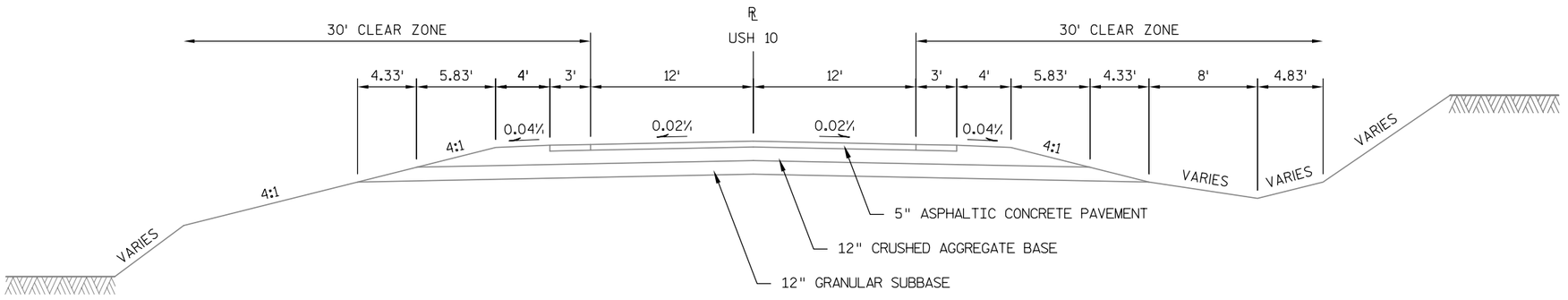

EXISTING TYPICAL SECTION

STA 187+00 TO STA 209+00
STA 252+00 TO STA 270+00
STA 294+80 TO STA 305+00

PROJECT NO:1530-07-62	HWY: USH 10	COUNTY: PIERCE	TYPICAL SECTIONS	SHEET 4	E

2

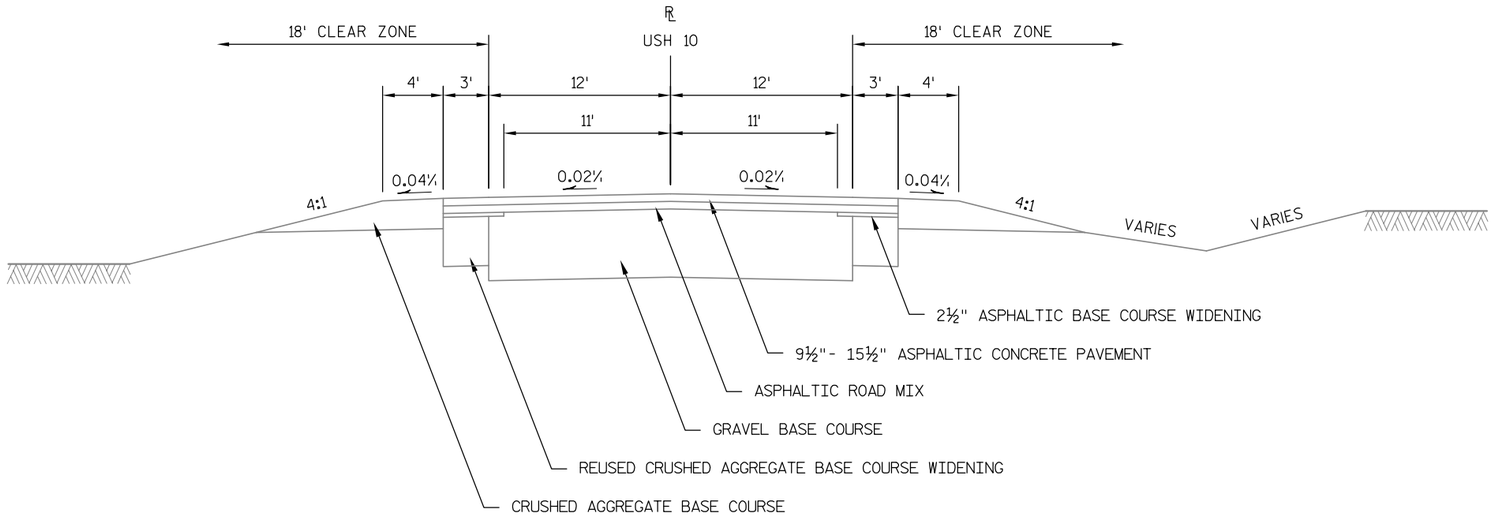

EXISTING TYPICAL SECTION

STA 270+00 TO STA 294+80

STA 305+00 TO STA 506+87.50

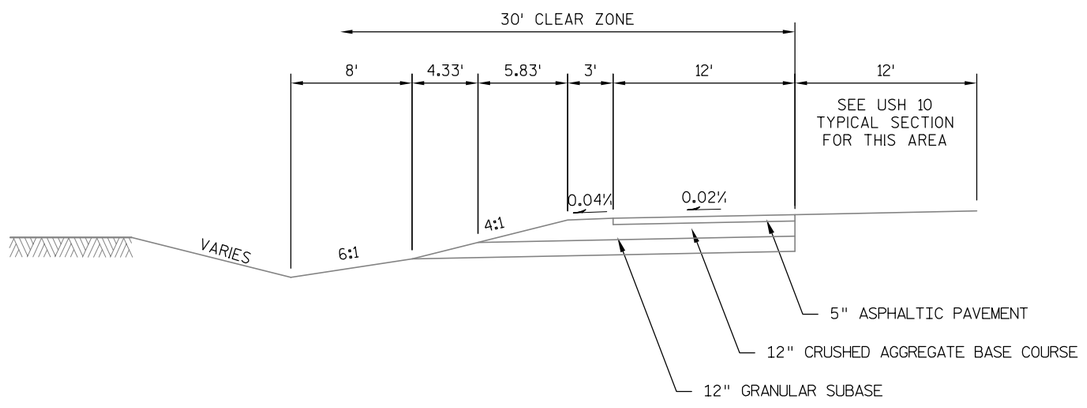

EXISITING TYPICAL SECTION AUXILARY LANE

STA 308+50 TO STA 363+00

PROJECT NO:1530-07-62	HWY: USH 10	COUNTY: PIERCE	TYPICAL SECTIONS	SHEET 5	E

2

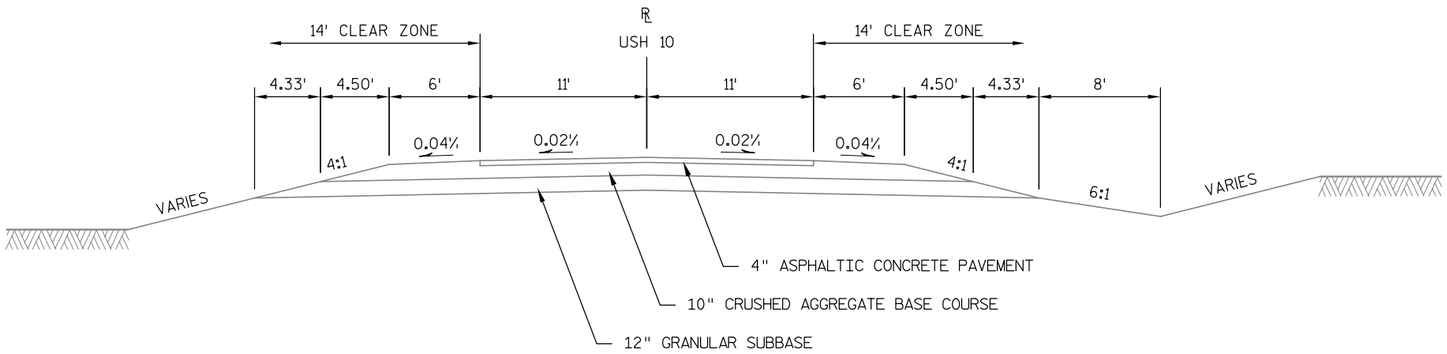

EXISTING TYPICAL SECTION

CTH D

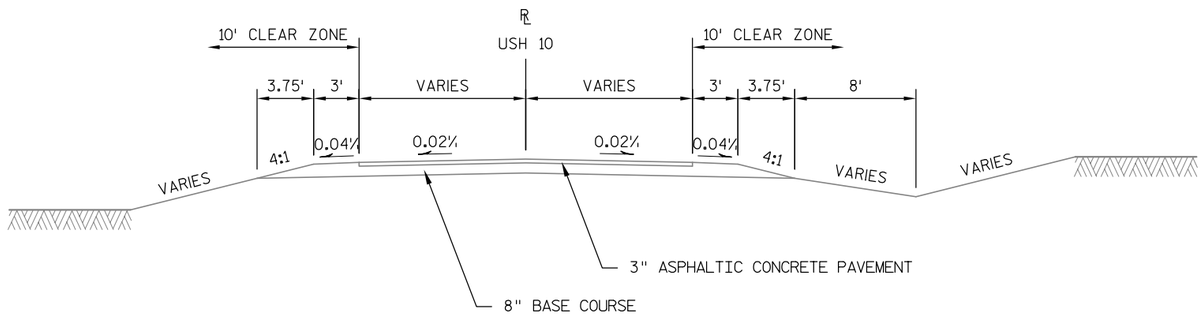

EXISTING TYPICAL SECTION

450TH AVE.
510TH ST.
530TH ST.

PROJECT NO:1530-07-62	HWY: USH 10	COUNTY: PIERCE	TYPICAL SECTIONS	SHEET 6	E

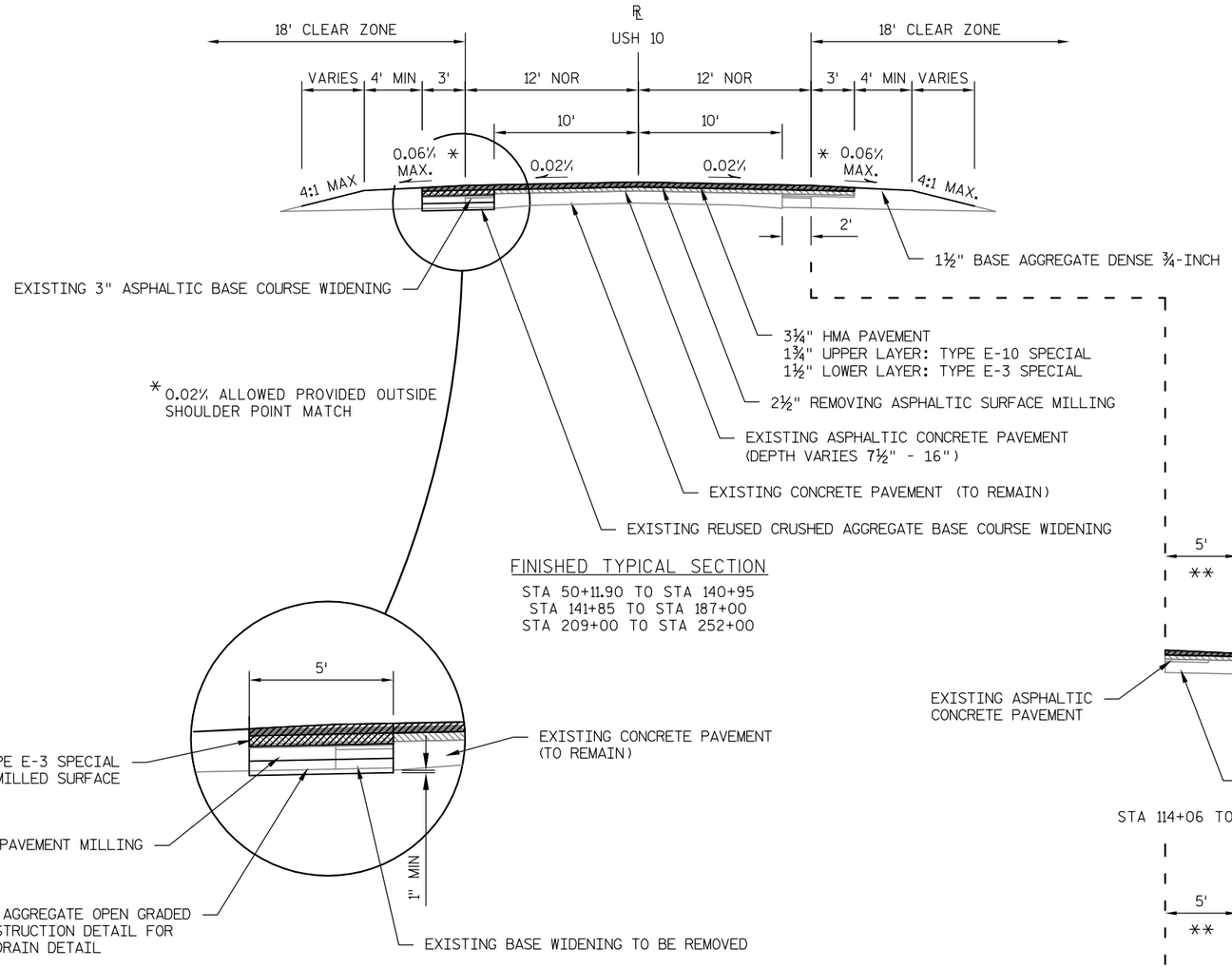

FINISHED TYPICAL SECTION

STA 50+11.90 TO STA 140+95
STA 141+85 TO STA 187+00
STA 209+00 TO STA 252+00

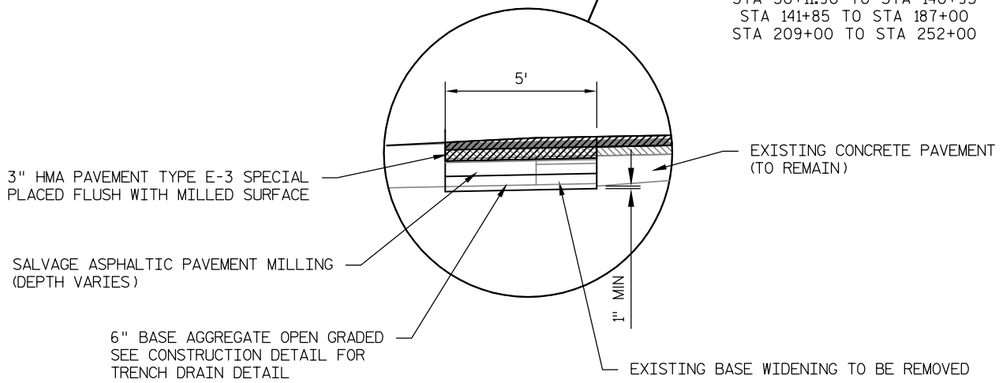

BASE WIDENING REPAIR ***

STA 73+37 TO STA 78+37 LT./RT.
STA 95+90 TO STA 100+90 LT./RT
STA 106+78 TO STA 111+78 LT./RT.
STA 136+70 TO STA 141+70 LT./RT.
STA 222+30 TO STA 227+30 LT./RT.
STA 236+56 TO STA 241+56 LT./RT.
STA 249+95 TO STA 254+95 LT./RT.

*** STATION RANGES MAY VARY. FOLLOWING COMPLETION OF SURFACE MILLING OPERATIONS, THE ENGINEER WILL ADJUST LIMITS OF BASE WIDENING REPAIR.

NOTE: ALL HMA PAVEMENT TO HAVE 64-34P AC.

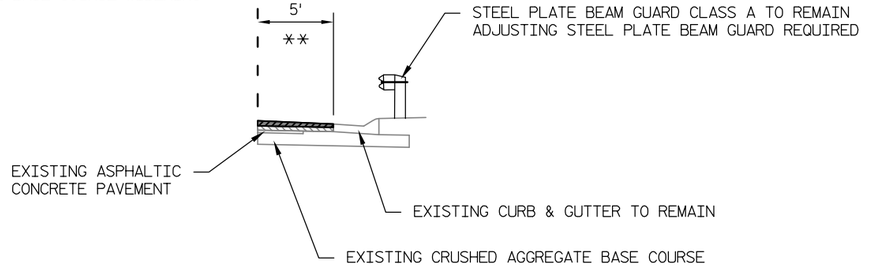

STA 114+06 TO STA 118+00 RT.

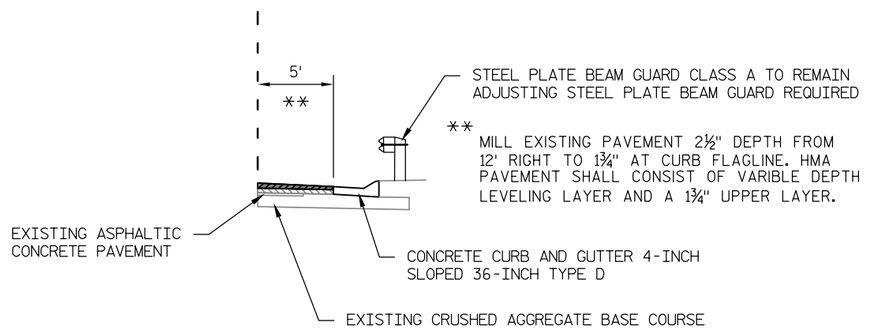

STA 113+00 TO STA 114+06 RT.
STA 118+00 TO STA 118+61 RT.

PROJECT NO: 1530-07-62	HWY: USH 10	COUNTY: PIERCE	TYPICAL SECTIONS	SHEET 7	E

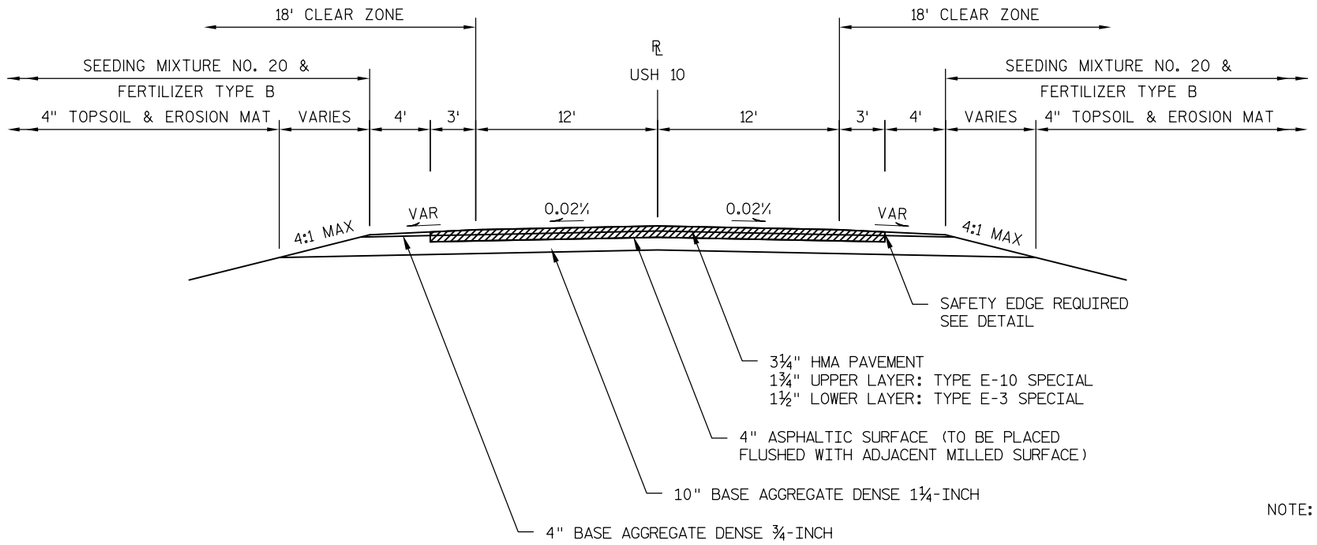

NOTE: ALL HMA PAVEMENT TO HAVE 64-34P AC.

FINISHED TYPICAL SECTION
(CULVERT PIPE REPLACEMENT)
STA 140+95 TO STA 141+85

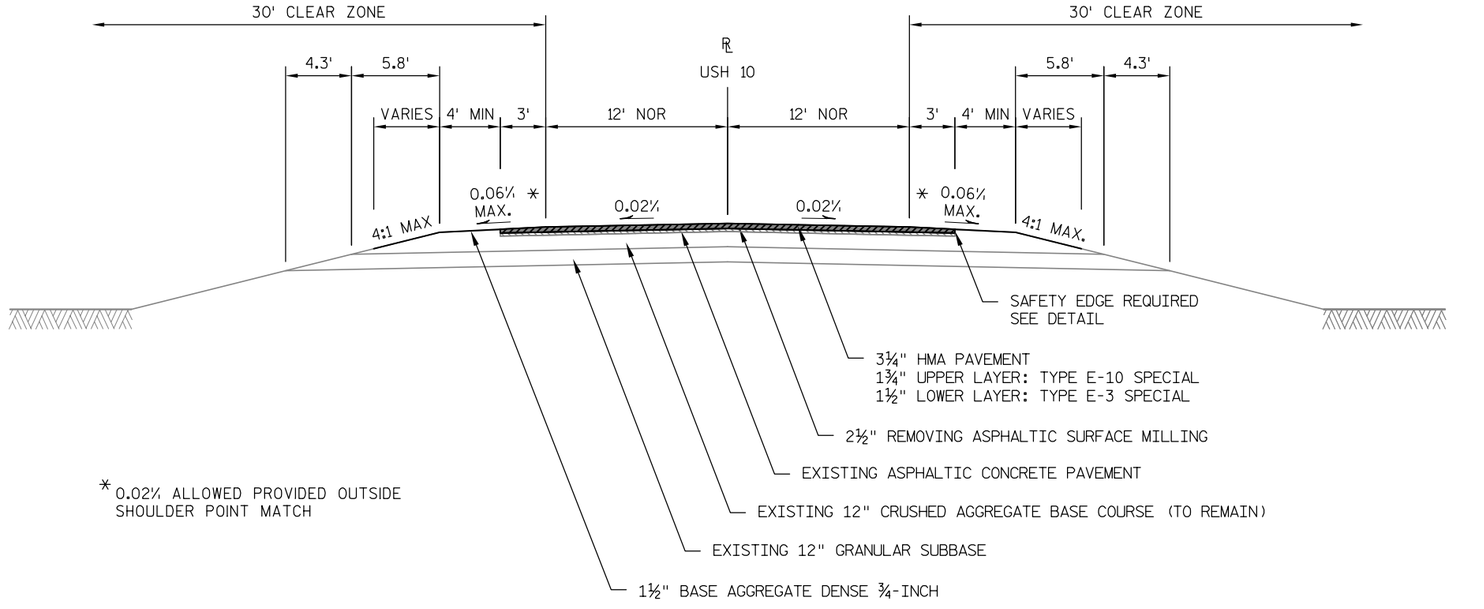

* 0.02% ALLOWED PROVIDED OUTSIDE
SHOULDER POINT MATCH

FINISHED TYPICAL SECTION
STA 187+00 TO STA 209+00
STA 252+00 TO STA 270+00
STA 294+80 TO STA 305+00

PROJECT NO: 1530-07-62	HWY: USH 10	COUNTY: PIERCE	TYPICAL SECTIONS	SHEET 8	E

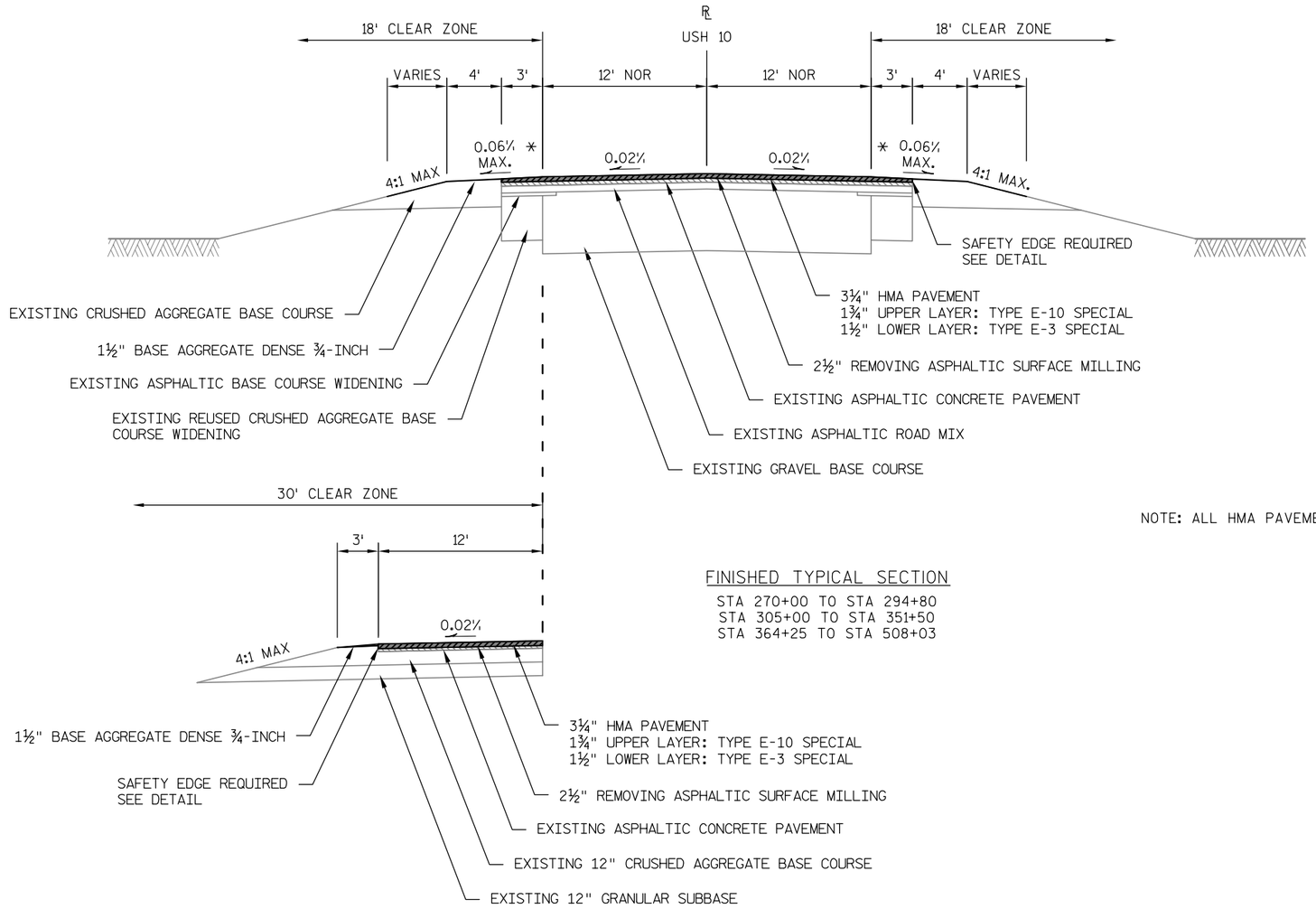

FINISHED TYPICAL SECTION

STA 270+00 TO STA 294+80
STA 305+00 TO STA 351+50
STA 364+25 TO STA 508+03

NOTE: ALL HMA PAVEMENT TO HAVE 64-34P AC.

FINISHED TYPICAL SECTION AUXILARY LANE

STA 308+50 TO STA 363+00

PROJECT NO:1530-07-62	HWY:USH 10	COUNTY:PIERCE	TYPICAL SECTIONS	SHEET 9	E

2

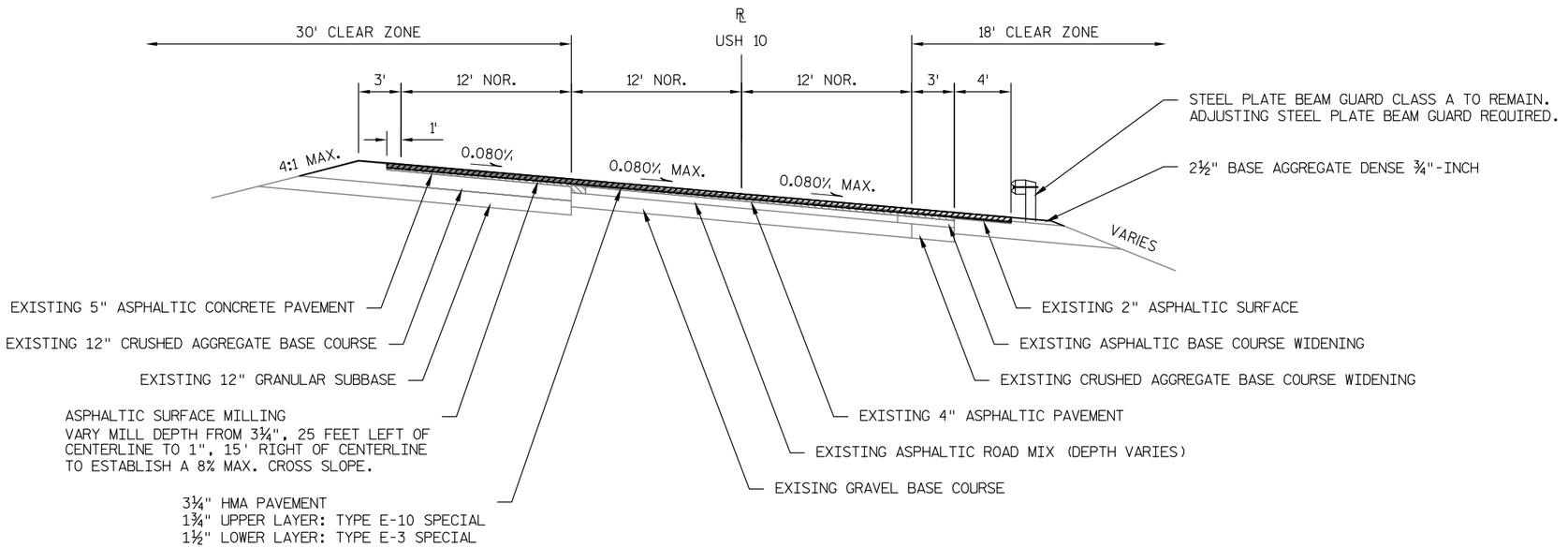

FINISHED TYPICAL SECTION

STA 351+50 TO STA 364+25

NOTE: ALL HMA PAVEMENT TO HAVE 64-34P AC.

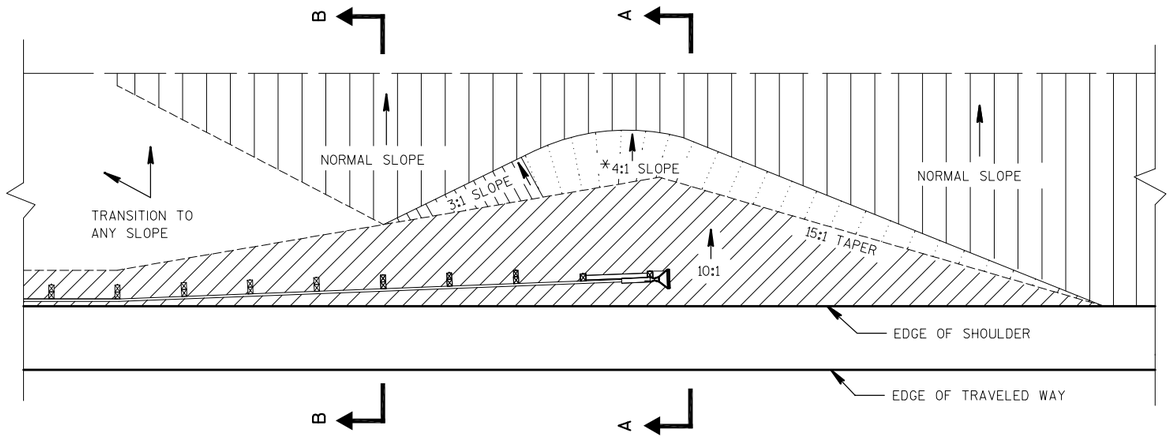

PLAN VIEW

*A 3:1 MAXIMUM SLOPE MAY BE USED FOR INSTALLATIONS ON EXISTING HIGHWAYS.

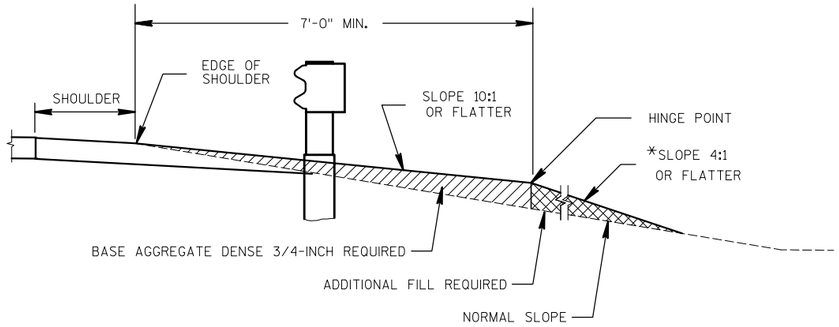

SECTION A-A

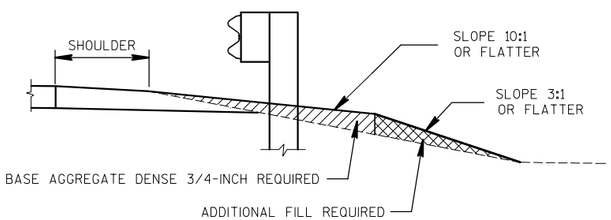

SECTION B-B

FILL AREA AT BEAM GUARD

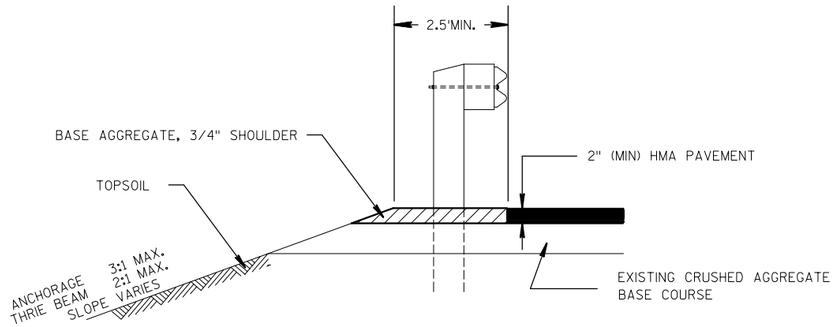

ASPHALTIC SHOULDER AT GUARD RAIL

SECTION A-A

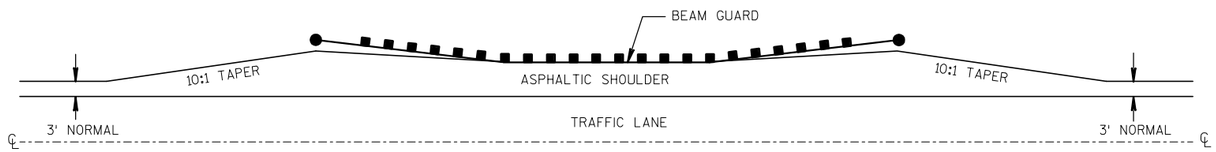

DETAIL FOR ASPHALTIC SHOULDER AT BEAM GUARD

SEE MISCELLANEOUS QUANTITIES
FOR LOCATIONS

PROJECT NO:1530-07-62	HWY: USH 10	COUNTY: PIERCE	CONSTRUCTION DETAILS	SHEET 11	E

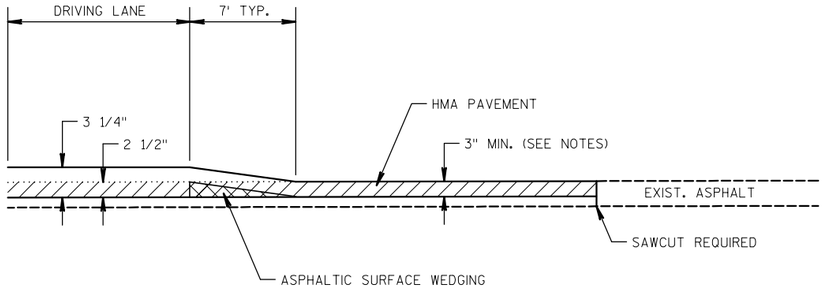

PROFILE VIEW

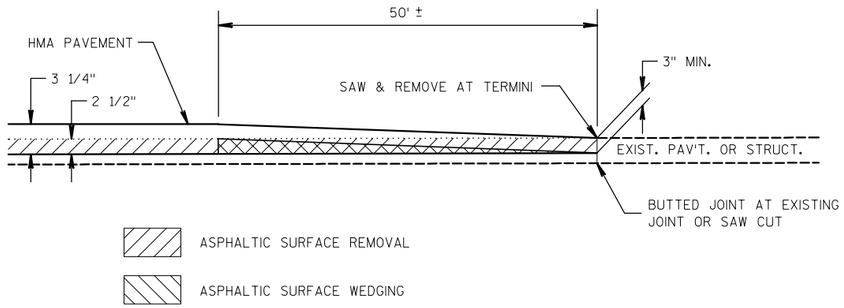

OVERLAP JOINT, BUTTED DETAIL

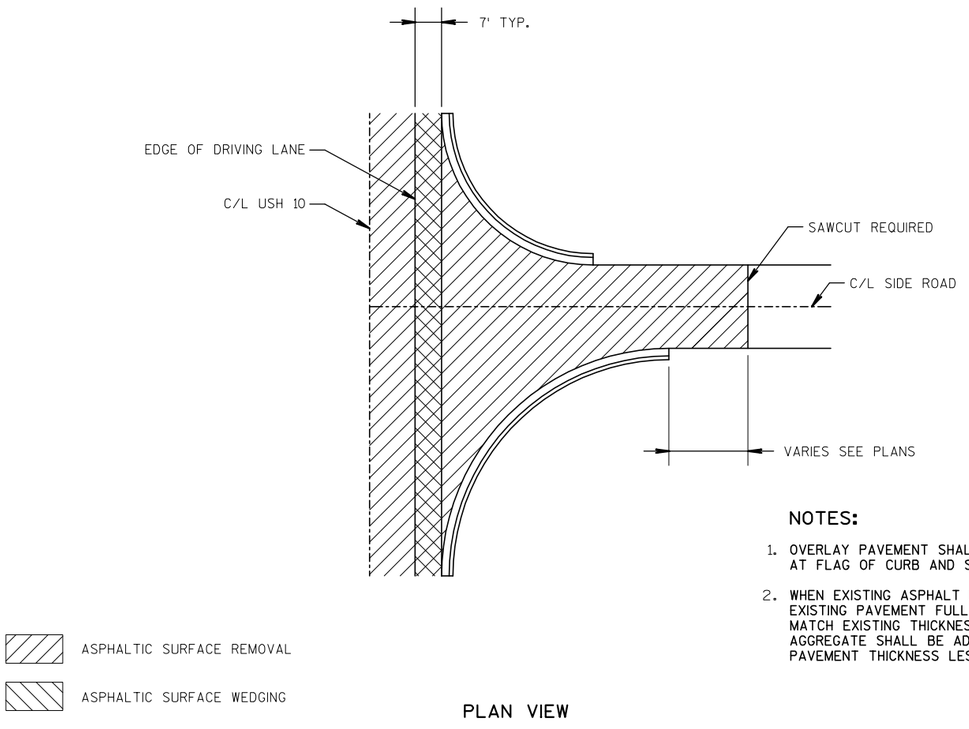

PLAN VIEW

NOTES:

1. OVERLAY PAVEMENT SHALL MEET EXISTING ELEVATION AT FLAG OF CURB AND SAWCUT.
2. WHEN EXISTING ASPHALT IS LESS THAN 4", MILL/REMOVE EXISTING PAVEMENT FULL DEPTH.NEW PAVEMENT SHALL MATCH EXISTING THICKNESS (3" MIN). THE BASE AGGREGATE SHALL BE ADJUSTED FOR EXISTING PAVEMENT THICKNESS LESS THAN 3".

OVERLAP JOINT, BUTTED DETAIL

2

PROJECT NO:1530-07-62	HWY: USH 10	COUNTY: PIERCE	CONSTRUCTION DETAILS	SHEET 12	E

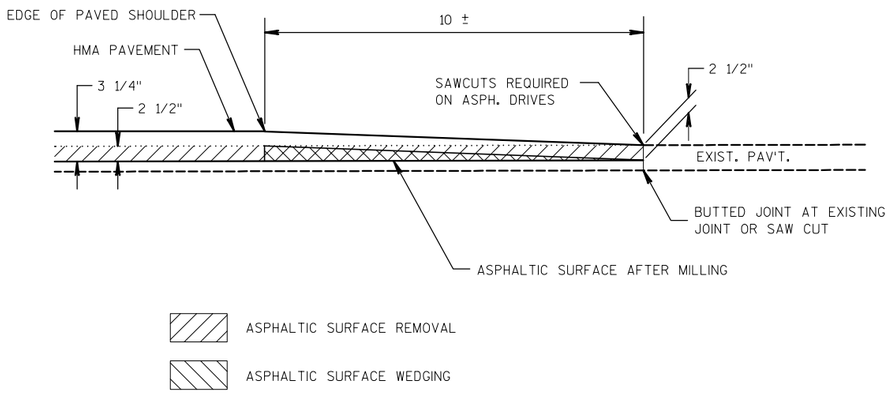

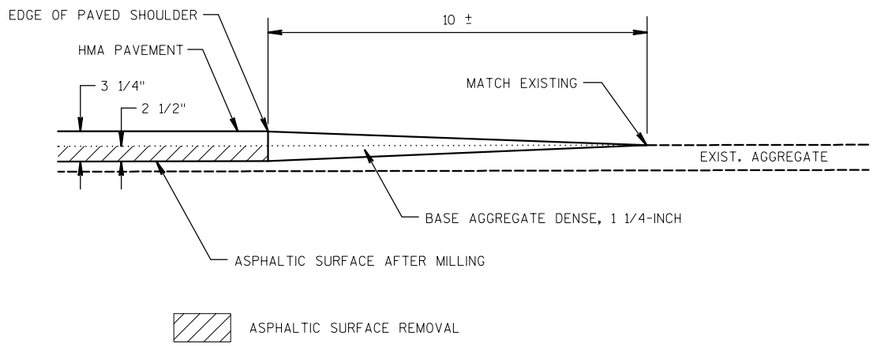

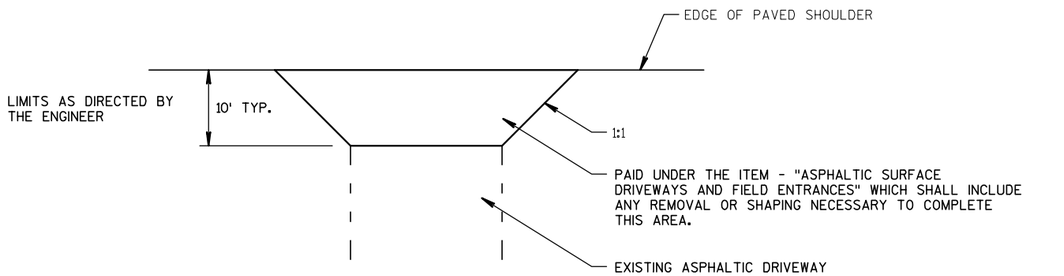

NOTE:
ANY ADDITIONAL BASE AGGREGATE DENSE REQUIRED SHALL BE PAID UNDER THE ITEM - "BASE AGGREGATE DENSE 3/4-INCH"

RURAL DRIVEWAY DETAIL - ASPHALT

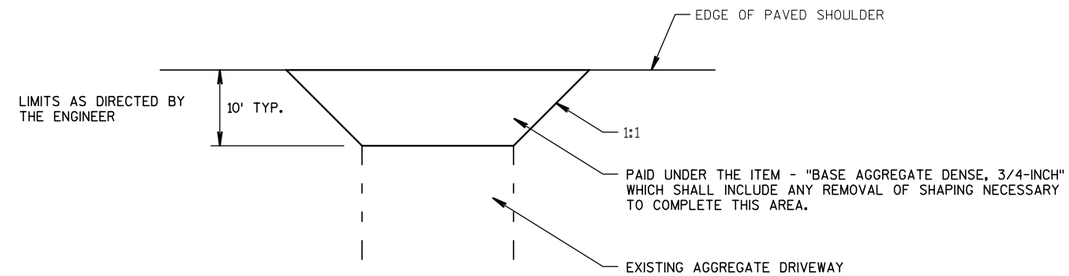

NOTE:
ANY ADDITIONAL BASE AGGREGATE DENSE REQUIRED SHALL BE PAID UNDER THE ITEM - "BASE AGGREGATE DENSE 3/4-INCH"

RURAL DRIVEWAY DETAIL - AGGREGATE

2

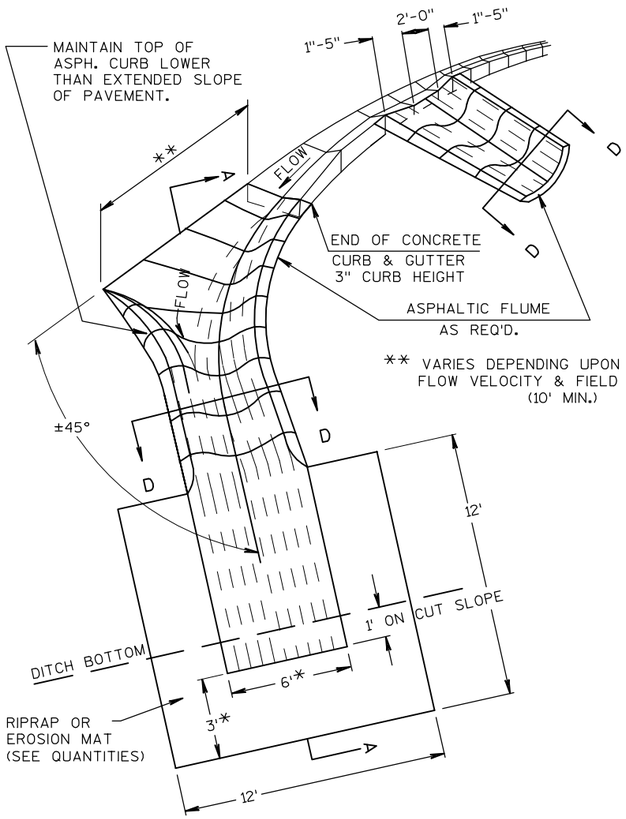

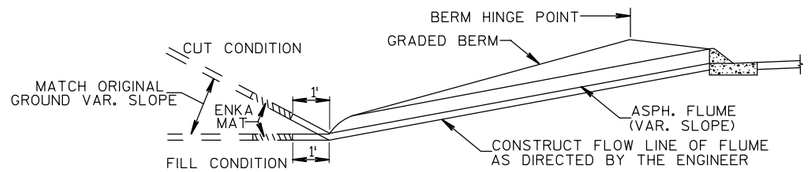

SECTION A-A

** VARIES DEPENDING UPON ANTICIPATED FLOW VELOCITY & FIELD CONDITIONS (10' MIN.)

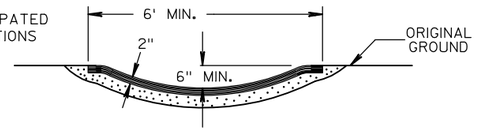

SECTION D-D

ASPHALTIC FLUME DETAIL
AT RURAL INTERSECTIONS

PROJECT NO:1530-07-62	HWY: USH 10	COUNTY: PIERCE	CONSTRUCTION DETAILS	SHEET 14	E

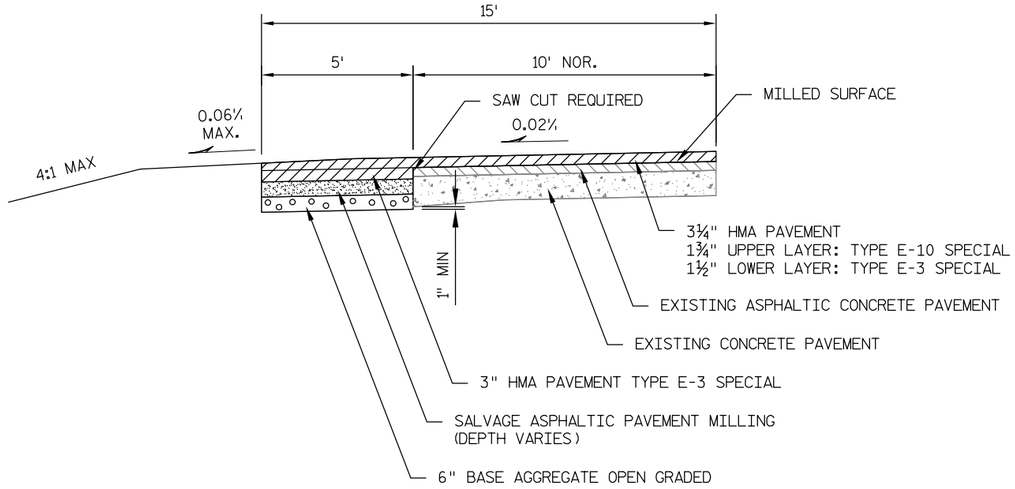

TYPICAL HALF TRENCH WITHOUT RELIEF TRENCH

NOTE: ALL HMA PAVEMENT TO HAVE 64-34P AC.

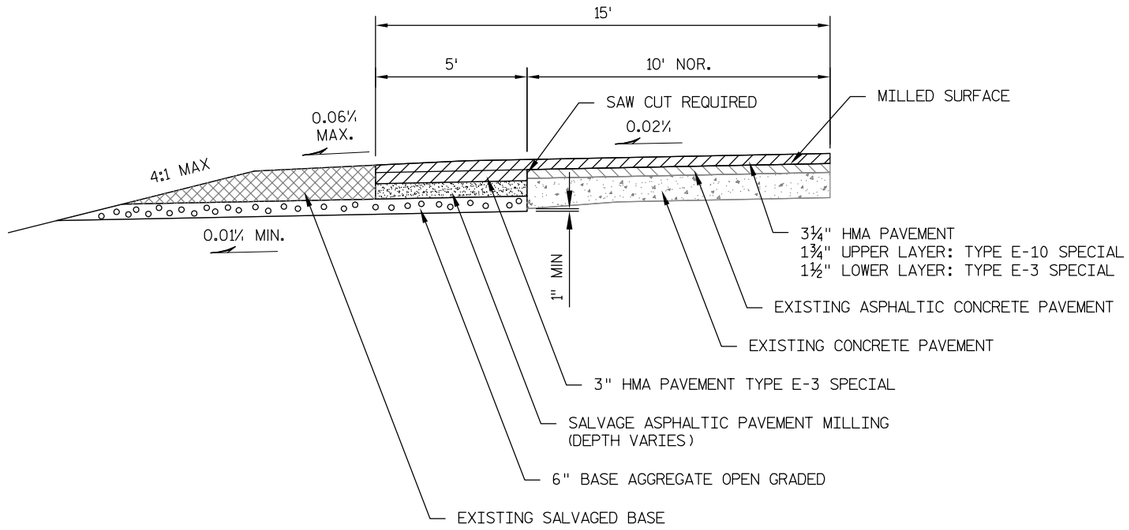

TYPICAL HALF TRENCH WITH RELIEF TRENCH

STA 75+87 LT/RT
STA 98+40 LT/RT
STA 109+28 LT/RT
STA 139+20 LT/RT
STA 224+80 LT/RT
STA 239+06 LT/RT
STA 252+45 LT/RT

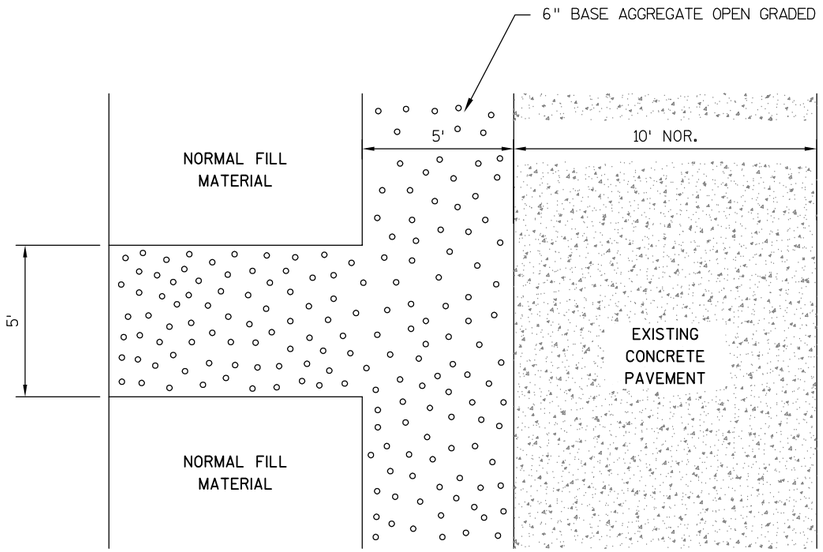

RELIEF TRENCH

CONSTRUCT RELIEF TRENCH EVERY 300' MIN. AND AT ALL LOW POINTS.

2

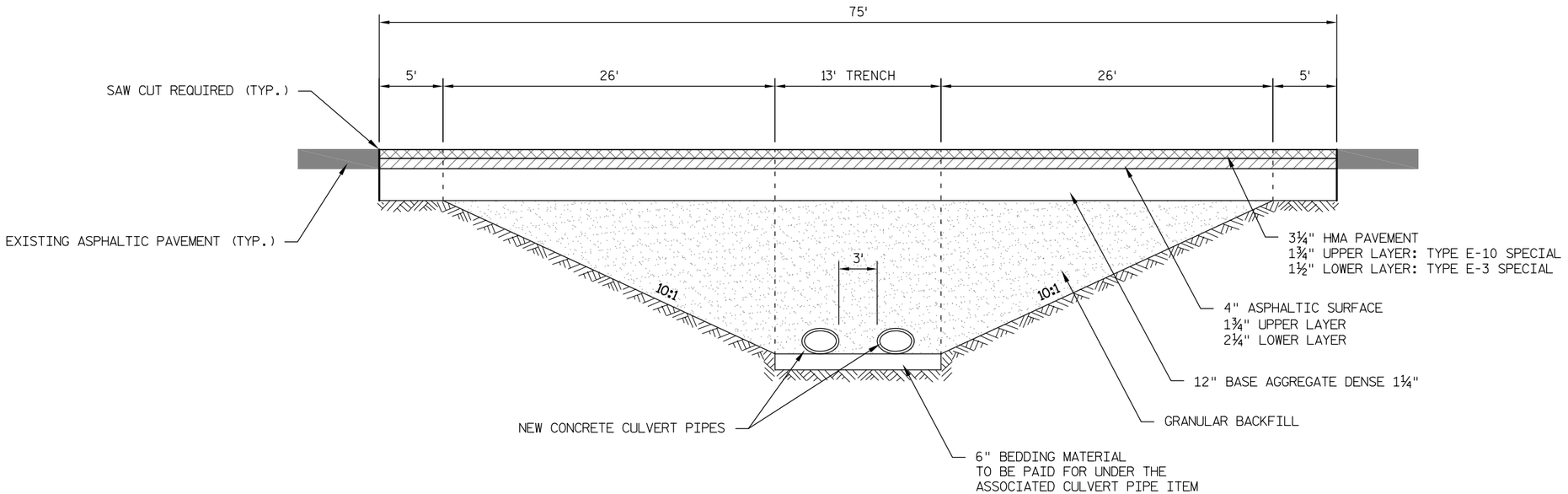

CULVERT REPLACEMENT DETAIL

STA 140+95

NOTE: ALL HMA PAVEMENT TO HAVE 64-34P AC.

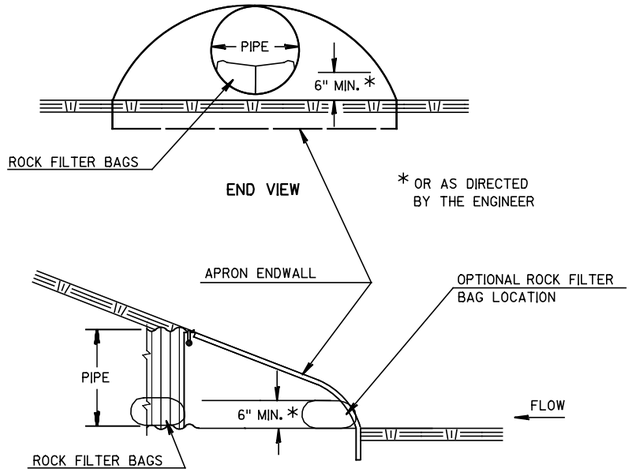

ROCK BAGS USED FOR CULVERT PIPE CHECKS DETAIL

(INSTALL ON INLET END ONLY)

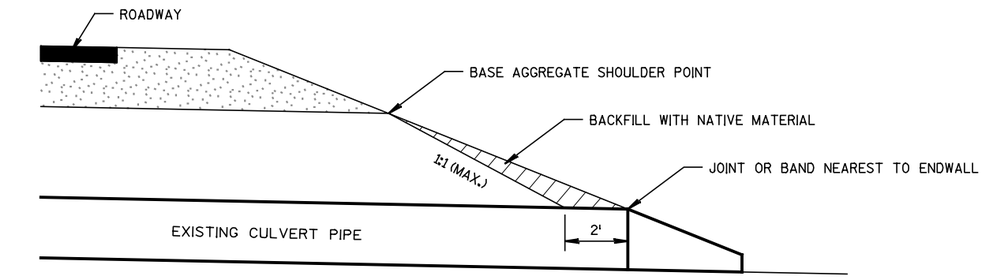

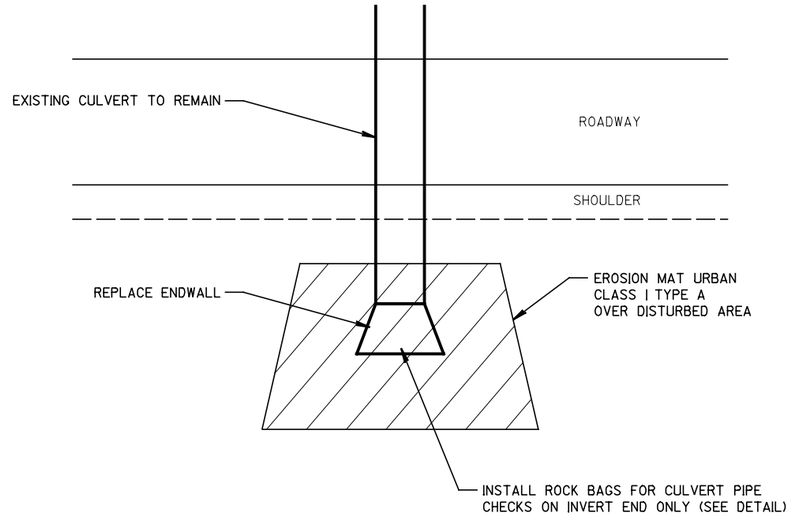

NOTES:

1. INSTALL RIPRAP WHERE INDICATED ON PLAN SHEETS.
2. REPLACE DAMAGED OR DETERIORATED JOINT TIES AND BANDS. ITEMS PAID FOR UNDER ASSOCIATED ENDWALL ITEM.

TYPICAL ENDWALL REPLACEMENT DETAIL

SEE PLAN SHEETS FOR LOCATIONS

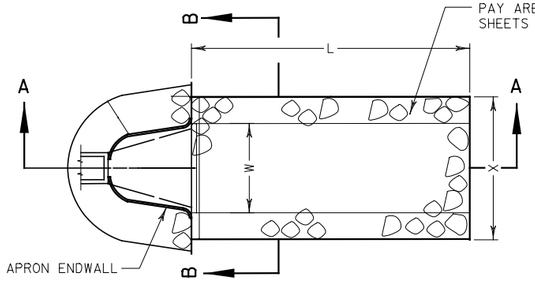

PLAN VIEW

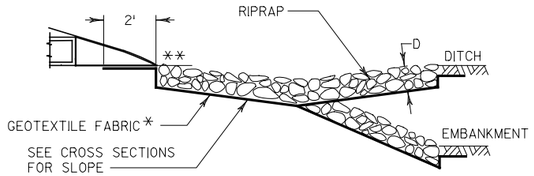

SECTION A-A

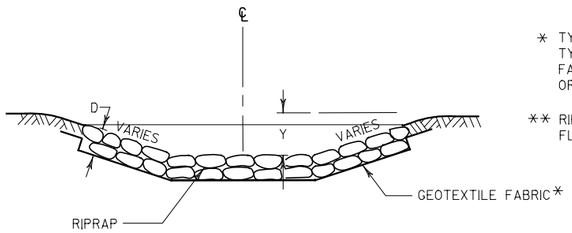

SECTION B-B

L = 3 x W (NOR) OR 10' MIN
OR AS INDICATED IN THE PLANS
OR AS DIRECTED BY THE ENGINEER

D = 12" FOR RIPRAP LIGHT
18" FOR RIPRAP MEDIUM

X = W+2' FOR TYPICAL CULVERT
DISCHARGE INTO DITCH
W+5' FOR CULVERT DISCHARGE
DOWN EMBANKMENT SLOPE

Y = 0' FOR TYPICAL CULVERT
DISCHARGE INTO DITCH
12" FOR CULVERT DISCHARGE
DOWN EMBANKMENT SLOPE

* TYPE R (FOR RIPRAP LIGHT ONLY)
TYPE HR (FOR RIPRAP MEDIUM ONLY)
FABRIC REQUIRED TO BE SINGLE SHEET WIDE
OR HAND SEWN

** RIPRAP TO BE PLACED BELOW THE
FLOWLINE OF PIPE OUTLET

RIPRAP AND GEOTEXTILE FABRIC DETAIL AT APRON ENDWALLS

SEE PLAN SHEETS FOR LOCATIONS

2

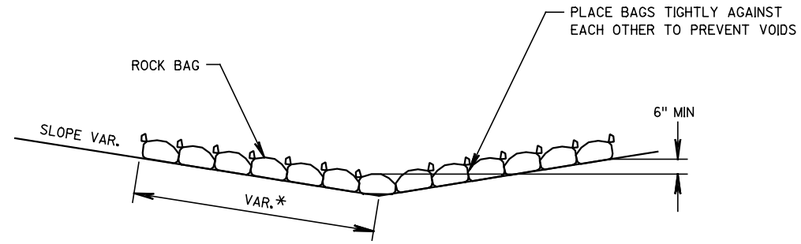

SIDE VIEW (SINGLE LAYER)

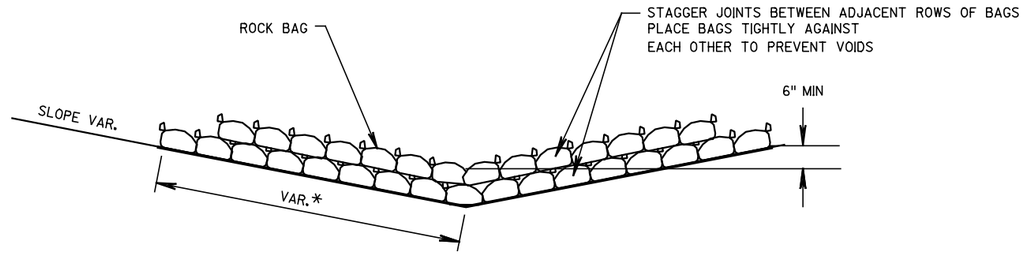

* LENGTH AND NUMBER OF BAGS MAY VARY
DEPENDING ON DESIRED DEPTH OF WATER POOL

SIDE VIEW (MULTIPLE LAYER)

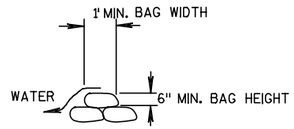

SECTION A-A

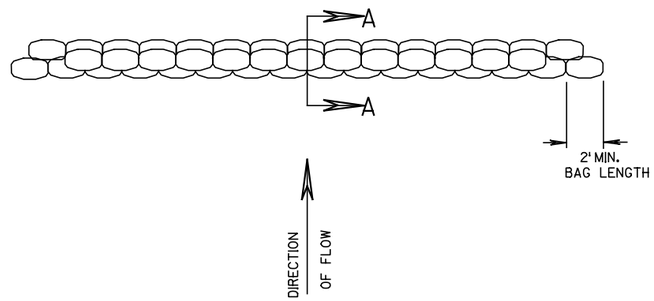

TOP VIEW (MULTIPLE LAYER)

ROCK BAGS FOR TEMPORARY DITCH CHECKS

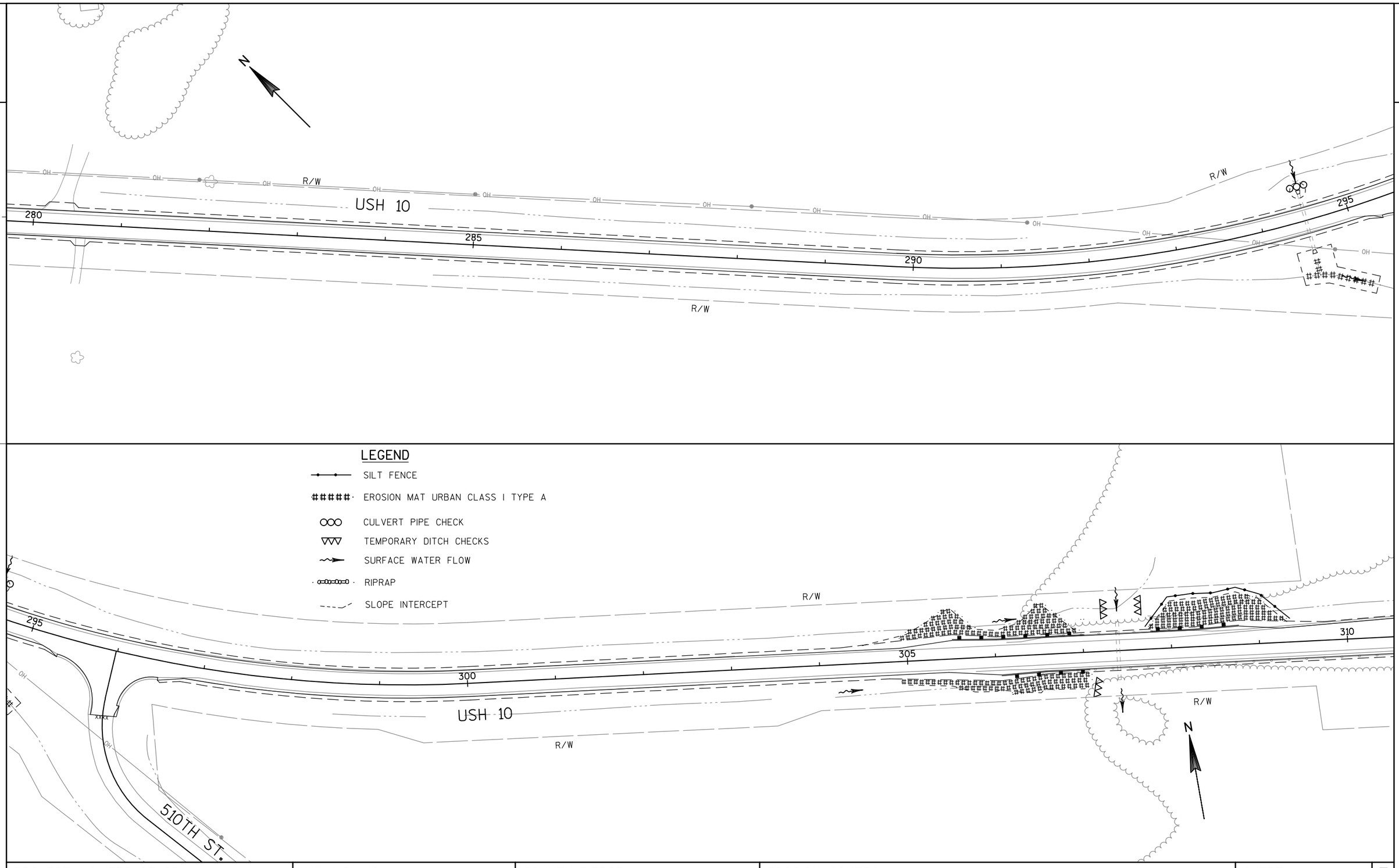

PROJECT NO:1530-07-62	HWY:USH 10	COUNTY:PIERCE	EROSION CONTROL	SHEET 19	E

FILE NAME : X:\23046-80\10024\TECH\CADD\DRAWINGS\022001_ER.DWG PLOT DATE : 4/30/2013 9:07 AM PLOT BY : JEFF BREU PLOT NAME : PLOT SCALE : 1:100_XREF

WISDOT/CADDS SHEET 44

2

2

N

RIPRAP MEDIUM REQUIRED

R/W

USH 10

310

315

320

325

RIPRAP MEDIUM REQUIRED

R/W

R/W

LEGEND

- SILT FENCE
- EROSION MAT URBAN CLASS I TYPE A
- CULVERT PIPE CHECK
- TEMPORARY DITCH CHECKS
- SURFACE WATER FLOW
- RIPRAP
- SLOPE INTERCEPT

490TH ST.

R/W

340

R/W

WETLAND IMPACT

WETLAND BOUNDARY (TYP.)

R/W

USH 10

325

330

335

N

R/W

490TH ST.

PROJECT NO: 1530-07-62	HWY: USH 10	COUNTY: PIERCE	EROSION CONTROL	SHEET 20	E

FILE NAME : X:\23046-80\10024\TECH\CADD\DRAWINGS\022001_ER.DWG PLOT DATE : 4/30/2013 9:07 AM PLOT BY : JEFF BREU PLOT NAME : ---------- PLOT SCALE : 1:100_XREF

2

N

R/W

USH 10

340

345

350

355

360

365

370

RIPRAP MEDIUM REQUIRED

WETLAND BOUNDARY (TYP.)

W

T

LEGEND

- SILT FENCE
- EROSION MAT URBAN CLASS I TYPE A
- CULVERT PIPE CHECK
- TEMPORARY DITCH CHECKS
- SURFACE WATER FLOW
- RIPRAP
- SLOPE INTERCEPT

PROJECT NO: 1530-07-62	HWY: USH 10	COUNTY: PIERCE	EROSION CONTROL	SHEET 21	E

2

N

QUARRY

R/W

USH 10

370

375

380

385

R/W

LEGEND

- SILT FENCE
- EROSION MAT URBAN CLASS I TYPE A
- CULVERT PIPE CHECK
- TEMPORARY DITCH CHECKS
- SURFACE WATER FLOW
- RIPRAP
- SLOPE INTERCEPT

N

R/W

385

390

USH 10

395

400

R/W

QUARRY

R/W

OH

OH

PROJECT NO: 1530-07-62	HWY: USH 10	COUNTY: PIERCE	EROSION CONTROL	SHEET 22	E

FILE NAME : X:\23046-80\10024\TECH\CADD\DRAWINGS\022001_ER.DWG PLOT DATE : 4/30/2013 9:03 AM PLOT BY : JEFF BREU PLOT NAME : ---------- PLOT SCALE : 1:100_XREF

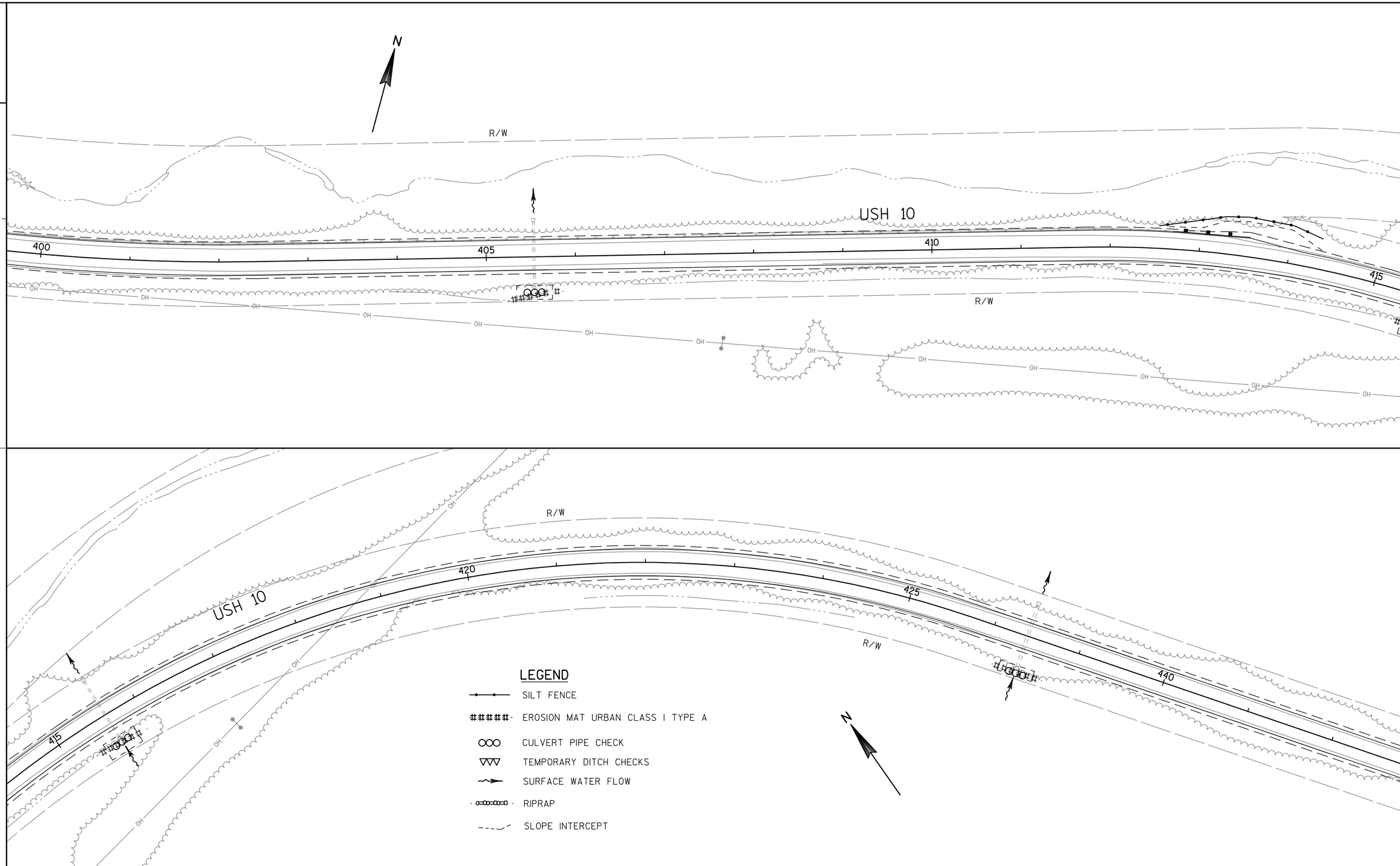

PROJECT NO:1530-07-62	HWY:USH 10	COUNTY:PIERCE	EROSION CONTROL	SHEET 23	E

FILE NAME : X:\23046-80\10024\TECH\CADD\DRAWINGS\022001_ER.DWG PLOT DATE : 4/30/2013 9:02 AM PLOT BY : JEFF BREU PLOT NAME : PLOT SCALE : 1:100_XREF

WISDOT/CADDS SHEET 44

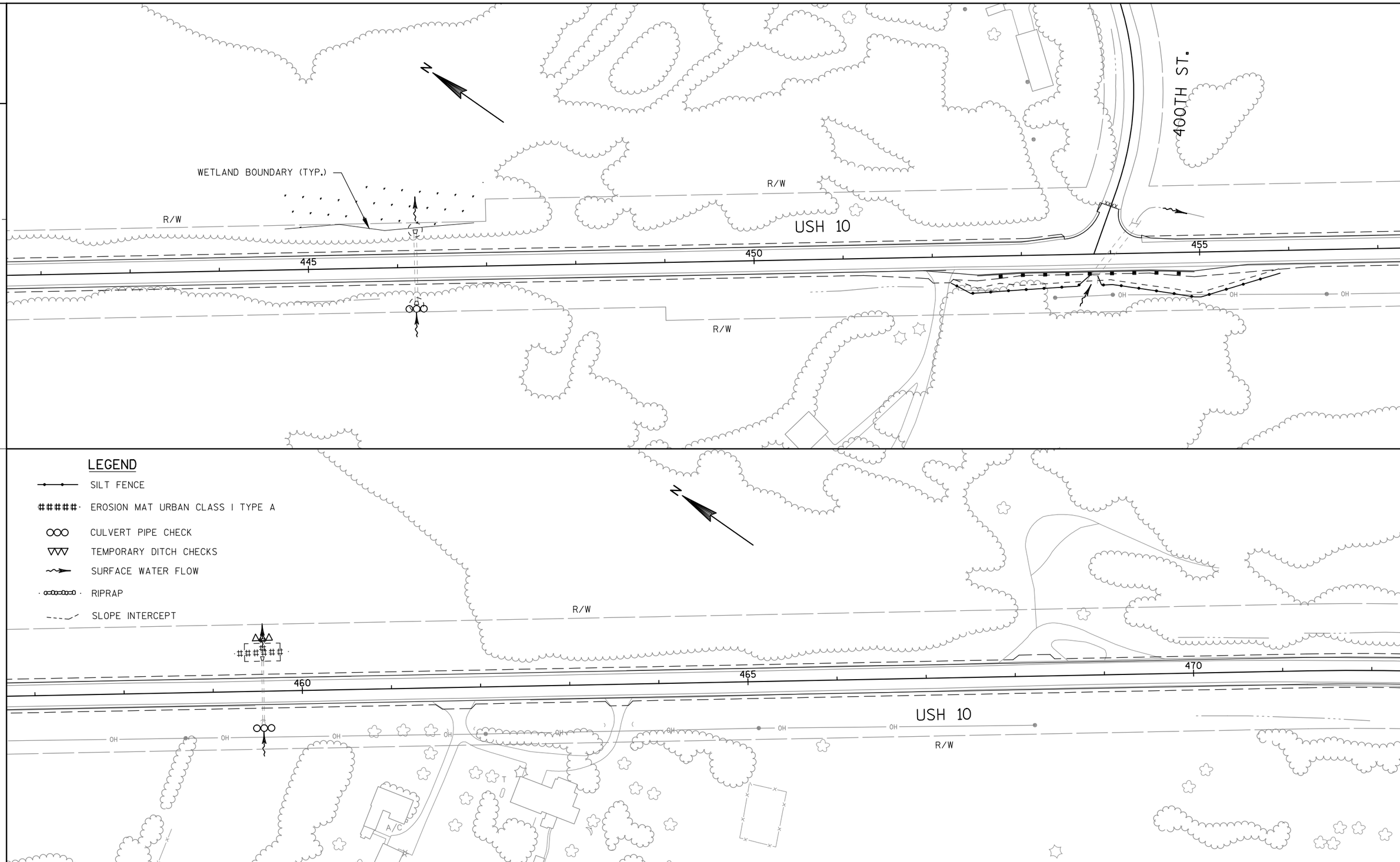

PROJECT NO:1530-07-62	HWY:USH 10	COUNTY:PIERCE	EROSION CONTROL	SHEET 24	E

FILE NAME : X:\23046-80\10024\TECH\CADD\DRAWINGS\022001_ER.DWG PLOT DATE : 4/30/2013 9:02 AM PLOT BY : JEFF BREU PLOT NAME : PLOT SCALE : 1:100_XREF

WISDOT/CADDS SHEET 44

2

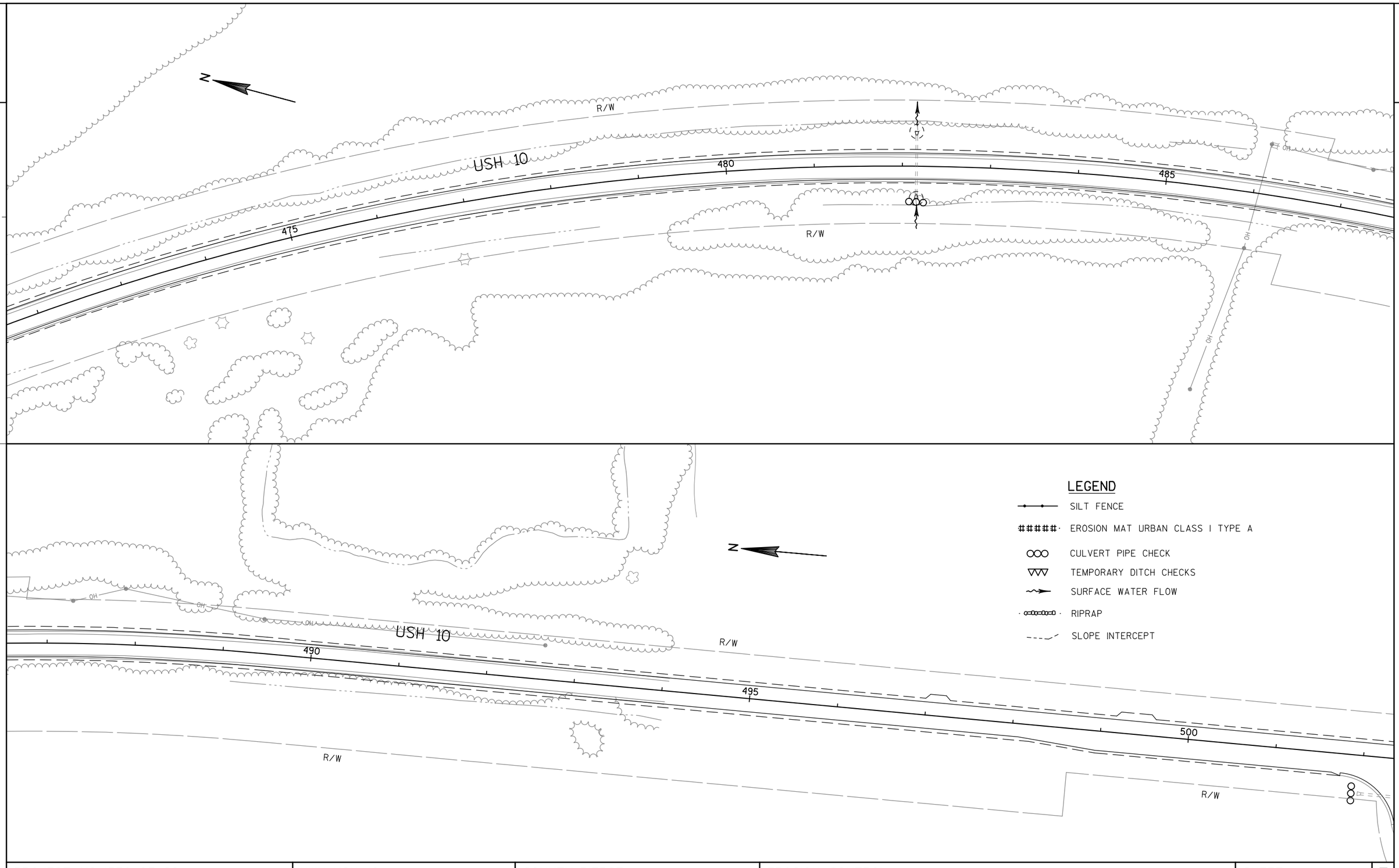

PROJECT NO:1530-07-62	HWY: USH 10	COUNTY: PIERCE	EROSION CONTROL	SHEET 25	E

2

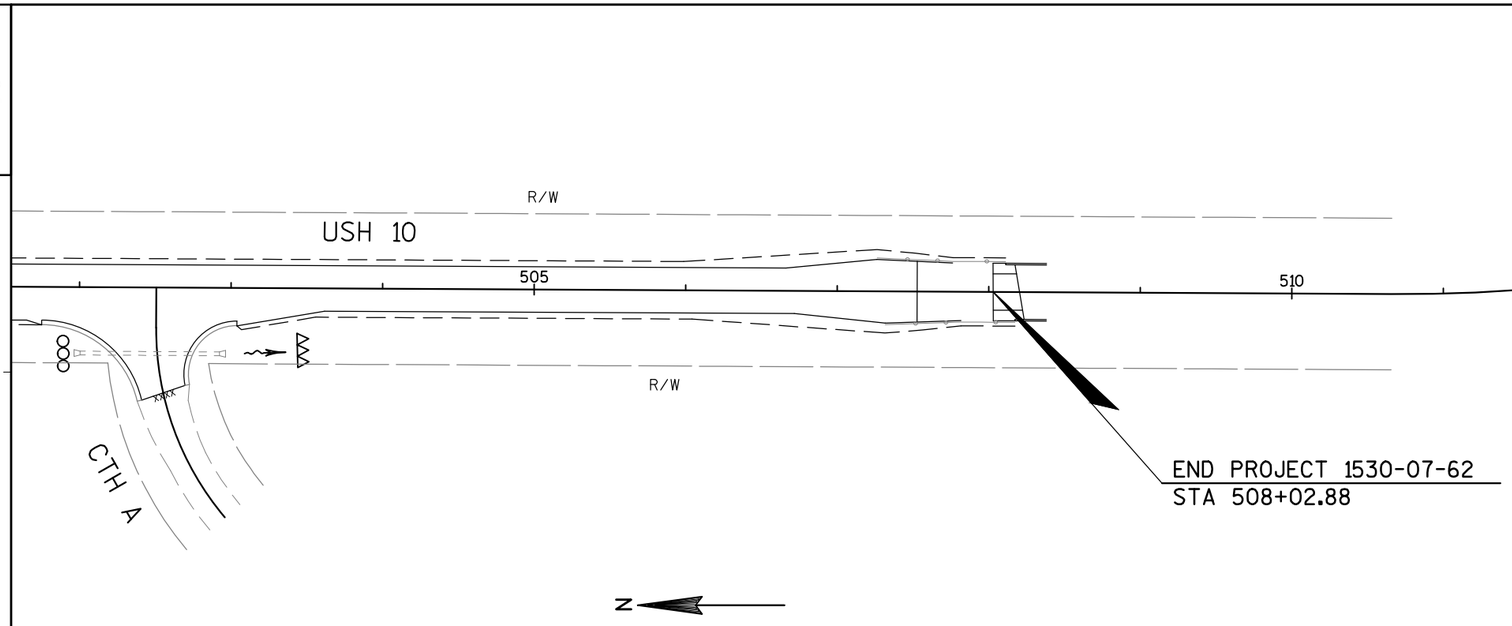

LEGEND

- SILT FENCE
- EROSION MAT URBAN CLASS I TYPE A
- CULVERT PIPE CHECK
- TEMPORARY DITCH CHECKS
- SURFACE WATER FLOW
- RIPRAP
- SLOPE INTERCEPT

PROJECT NO: 1530-07-62	HWY: USH 10	COUNTY: PIERCE	EROSION CONTROL	SHEET 26	E

FILE NAME : X:\23046-80\10024\TECH\CADD\DRAWINGS\022001_ER.DWG PLOT DATE : 4/30/2013 9:01 AM PLOT BY : JEFF BREU PLOT NAME : ---------- PLOT SCALE : 1:100_XREF

LEGEND

- ● REMOVING SIGN TYPE II
- ■ REMOVING SMALL SIGN SUPPORTS
- ▲ SIGNS REFLECTIVE TYPE II
- EXISTING SIGN MOUNTED ON POST(S)
- PROPOSED SIGN MOUNTED ON POST(S)
- (100) DENOTES SIGN NUMBER
- 36" X 36" INDICATES SIGN SIZE

106A WEST M 3-4 24" X 12" ● ■ ▲
106D SOUTH M 3-3 24" X 12" ● ■ ▲
106B 10 M1-4 24" X 24" ● ■ ▲
106E 63 M1-4 24" X 24" ● ■ ▲
106C M 6-1 21" X 21" ● ■ ▲
106F M 6-1 21" X 21" ● ■ ▲

106 WEST SOUTH 10 63 J3-2 48" X 57" ▲

108A STOP R1-1 36" X 36" ● ■
108 STOP R1-1 36" X 36" ▲

109A NORTH M 3-1 24" X 12" ● ■ ▲
109D EAST M 3-2 24" X 12" ● ■ ▲
109B 63 M1-4 24" X 24" ● ■ ▲
109E 72 M1-6 24" X 24" ● ■ ▲
109C M 6-1 21" X 21" ● ■ ▲
109F M 6-1 21" X 21" ● ■ ▲

109 NORTH EAST 63 72 J3-2 48" X 57" ▲

105A STOP R1-1 36" X 36" ● ■
DIVIDED HIGHWAY R6-3A 30" X 24" ● ■
104A

105 STOP R1-1 36" X 36" ▲
DIVIDED HIGHWAY R6-3A 30" X 24" ▲
104

NOTE: WISDOT ELECTRICIANS TO INSTALL RED FLASHING BEACON AND ANCILLARY ELECTRICAL ITEMS TO SUPPLEMENT THE STOP SIGN ON USH 10 AT USH 63. ALLOW WISDOT 3 DAYS TO PLACE CONDUIT UNDER THE RIGHT TURN LANE AFTER MILLING OPERATIONS ARE COMPLETE AND BEFORE ASPHALT IS PLACED.

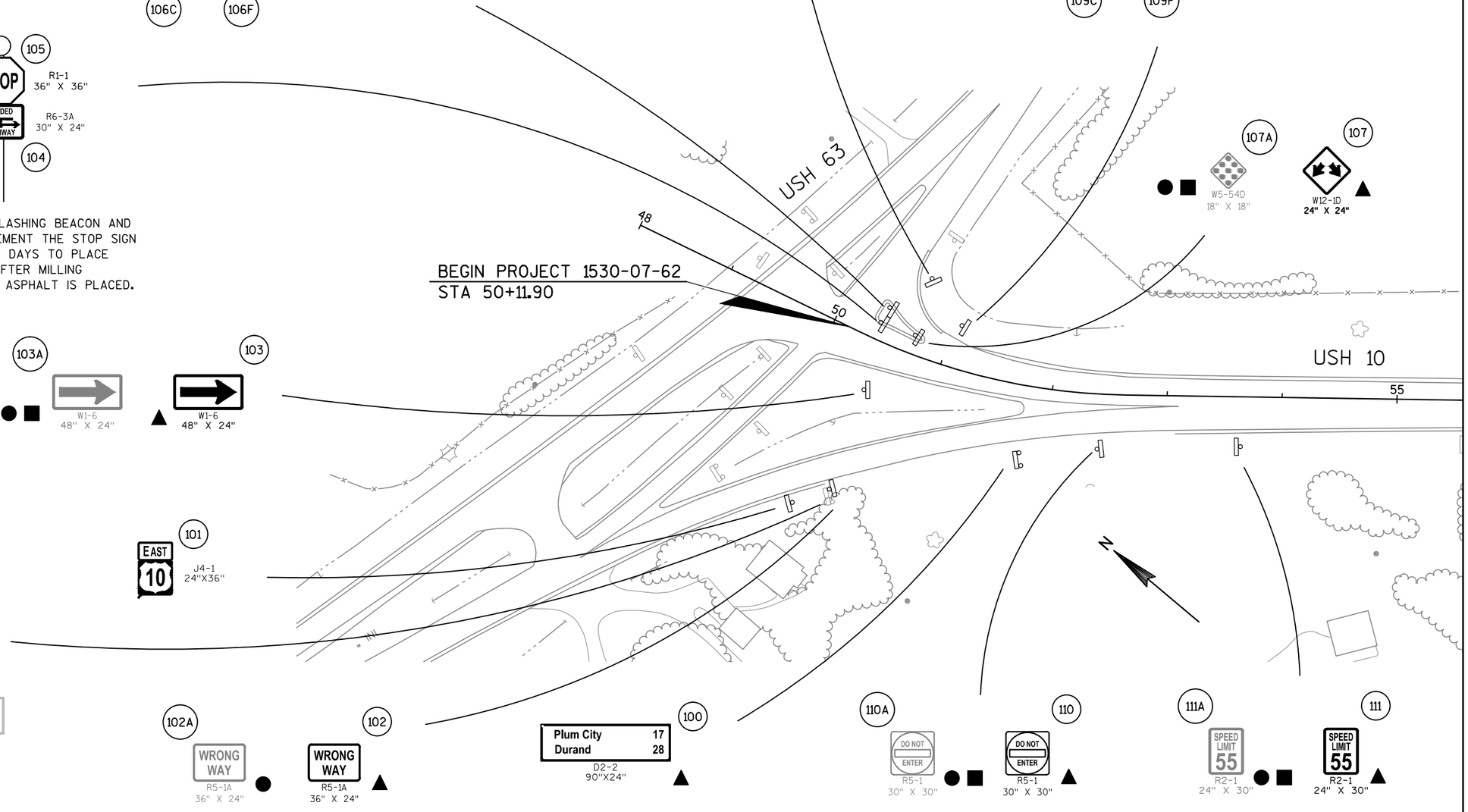

107A W5-54D 18" X 18" ● ■
107 W12-1D 24" X 24" ▲

103A W1-6 48" X 24" ● ■
103 W1-6 48" X 24" ▲

101A EAST M 3-2 24" X 12" ●
101B 10 M1-4 24" X 24" ●
100A Plum City 17 / Durand 28 ● ■

101 EAST 10 J4-1 24"X36"

102A WRONG WAY R5-1A 36" X 24" ● ■
102 WRONG WAY R5-1A 36" X 24" ▲

100 Plum City 17 / Durand 28 D2-2 90"X24" ▲

110A DO NOT ENTER R5-1 30" X 30" ● ■
110 DO NOT ENTER R5-1 30" X 30" ▲

111A SPEED LIMIT 55 R2-1 24" X 30" ● ■
111 SPEED LIMIT 55 R2-1 24" X 30" ▲

PROJECT NO: 1530-07-62	HWY: USH 10	COUNTY: PIERCE	PERMANENT SIGNING	SHEET 27	E

2

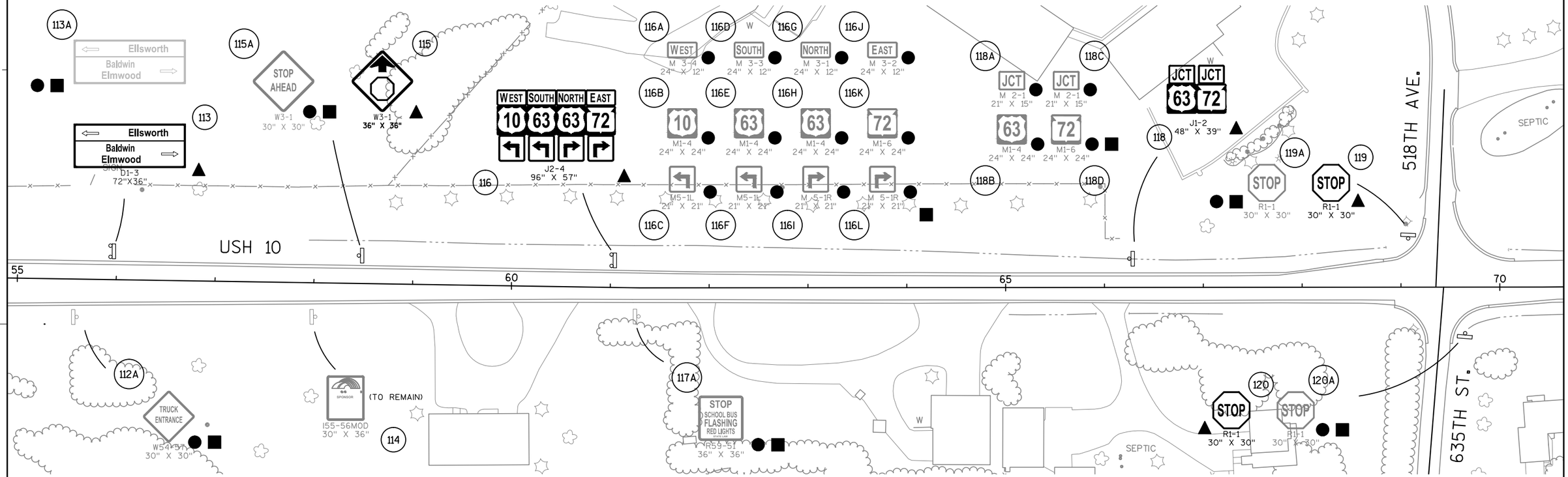

LEGEND

●	REMOVING SIGN TYPE II
■	REMOVING SMALL SIGN SUPPORTS
▲	SIGNS REFLECTIVE TYPE II
	EXISTING SIGN MOUNTED ON POST(S)
	PROPOSED SIGN MOUNTED ON POST(S)
100	DENOTES SIGN NUMBER
36" X 36"	INDICATES SIGN SIZE

N

PROJECT NO: 1530-07-62	HWY: USH 10	COUNTY: PIERCE	PERMANENT SIGNING	SHEET 28	E

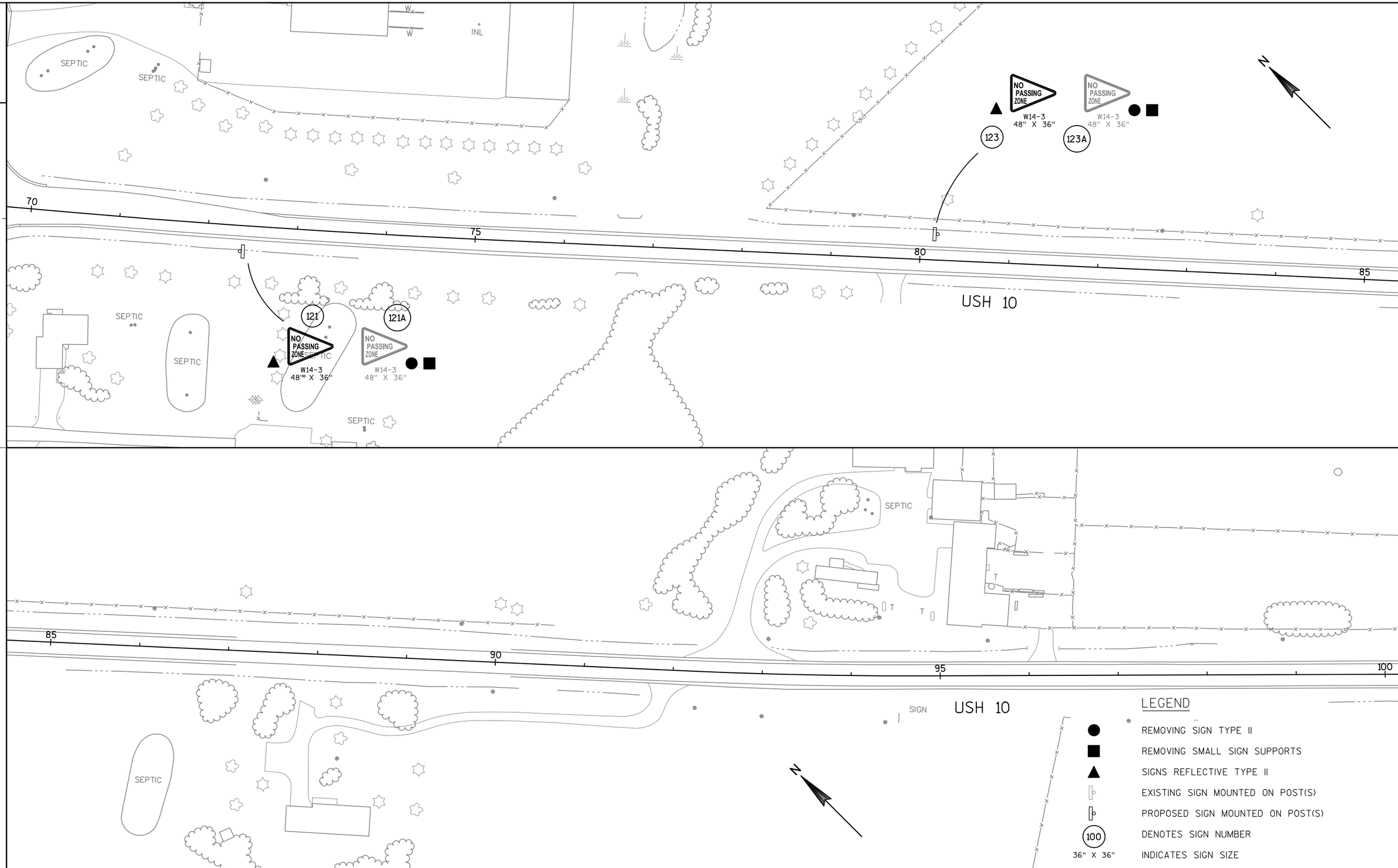

PROJECT NO:1530-07-62	HWY:USH 10	COUNTY:PIERCE	PERMANENT SIGNING	SHEET 29	E

FILE NAME : X:\23046-80\10024\TECH\CADD\DRAWINGS\023201_PS.DWG PLOT DATE : 4/26/2013 1:05 PM PLOT BY : JEFF BREU PLOT NAME : PLOT SCALE : ********** WISDOT/CADDS SHEET 44

2

610TH ST.

124A STOP R1-1 30" X 30"

124 STOP R1-1 30" X 30"

126 NO PARKING ANY TIME R7-1R 18" X 24"

126A NO PARKING ANY TIME R7-1R 18" X 24"

100 105 110 115

USH 10

125 STOP R1-1 30" X 30"

125A STOP R1-1 30" X 30"

127A NO PARKING ANY TIME R7-1L 18" X 24"

127 NO PARKING ANY TIME R7-1L 18" X 24"

610TH ST.

129 NO PARKING ANY TIME R7-1D 18" X 24"

129A NO PARKING ANY TIME R7-1D 18" X 24"

131 NO PARKING ANY TIME R7-1L 18" X 24"

131A NO PARKING ANY TIME R7-1L 18" X 24"

490TH AVE.

SEPTIC

132A STOP R1-1 30" X 30"

132 STOP R1-1 30" X 30"

LEGEND

- REMOVING SIGN TYPE II
- REMOVING SMALL SIGN SUPPORTS
- SIGNS REFLECTIVE TYPE II
- EXISTING SIGN MOUNTED ON POST(S)
- PROPOSED SIGN MOUNTED ON POST(S)
- 100 — DENOTES SIGN NUMBER
- 36" X 36" — INDICATES SIGN SIZE

MH

115 120 125 130

USH 10

128A NO PARKING ANY TIME R7-1D 18" X 24"

128 NO PARKING ANY TIME R7-1D 18" X 24"

130A NO PARKING ANY TIME R7-1R 18" X 24"

130 NO PARKING ANY TIME R7-1R 18" X 24"

133 STOP R1-1 30" X 30"

133A STOP R1-1 30" X 30"

490TH AVE.

SEPTIC

PROJECT NO: 1530-07-62	HWY: USH 10	COUNTY: PIERCE	PERMANENT SIGNING	SHEET 30	E

2

2

USH 10

130 135 140 145

134 NO PASSING ZONE W14-3 48" X 36"

134A NO PASSING ZONE W14-3 48" X 36"

SEPTIC

N

USH 10

145 150 155 160

135 NO PASSING ZONE W14-3 48" X 36"

135A NO PASSING ZONE W14-3 48" X 36"

N

LEGEND

- REMOVING SIGN TYPE II
- REMOVING SMALL SIGN SUPPORTS
- SIGNS REFLECTIVE TYPE II
- EXISTING SIGN MOUNTED ON POST(S)
- PROPOSED SIGN MOUNTED ON POST(S)
- (100) DENOTES SIGN NUMBER
- 36" X 36" INDICATES SIGN SIZE

PROJECT NO: 1530-07-62	HWY: USH 10	COUNTY: PIERCE	PERMANENT SIGNING	SHEET 31	E

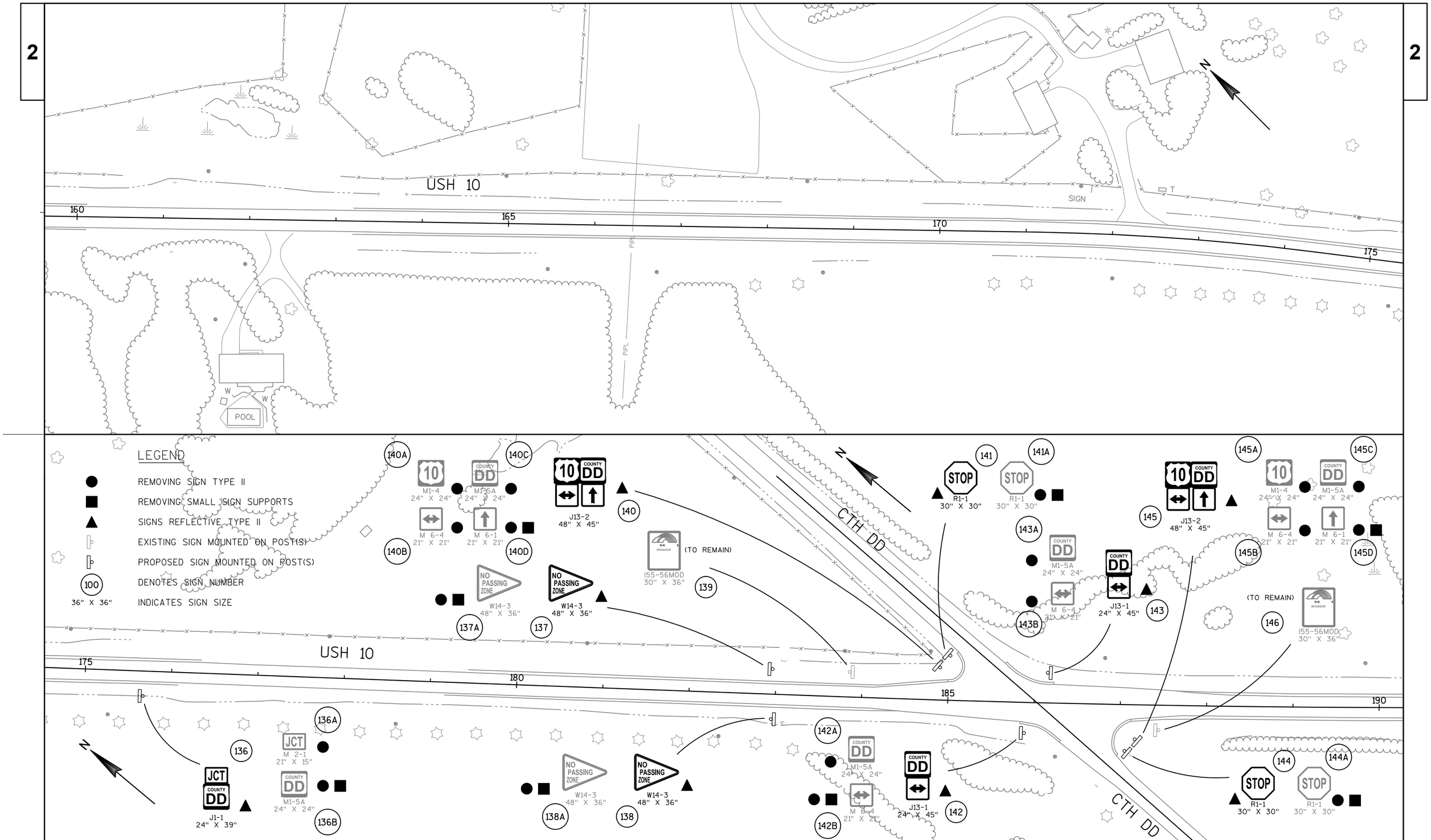

PROJECT NO:1530-07-62	HWY:USH 10	COUNTY:PIERCE	PERMANENT SIGNING	SHEET 32	E

FILE NAME : X:\23046-80\10024\TECH\CADD\DRAWINGS\023201_PS.DWG PLOT DATE : 4/26/2013 1:06 PM PLOT BY : JEFF BREU PLOT NAME : PLOT SCALE : ********** WISDOT/CADDS SHEET 44

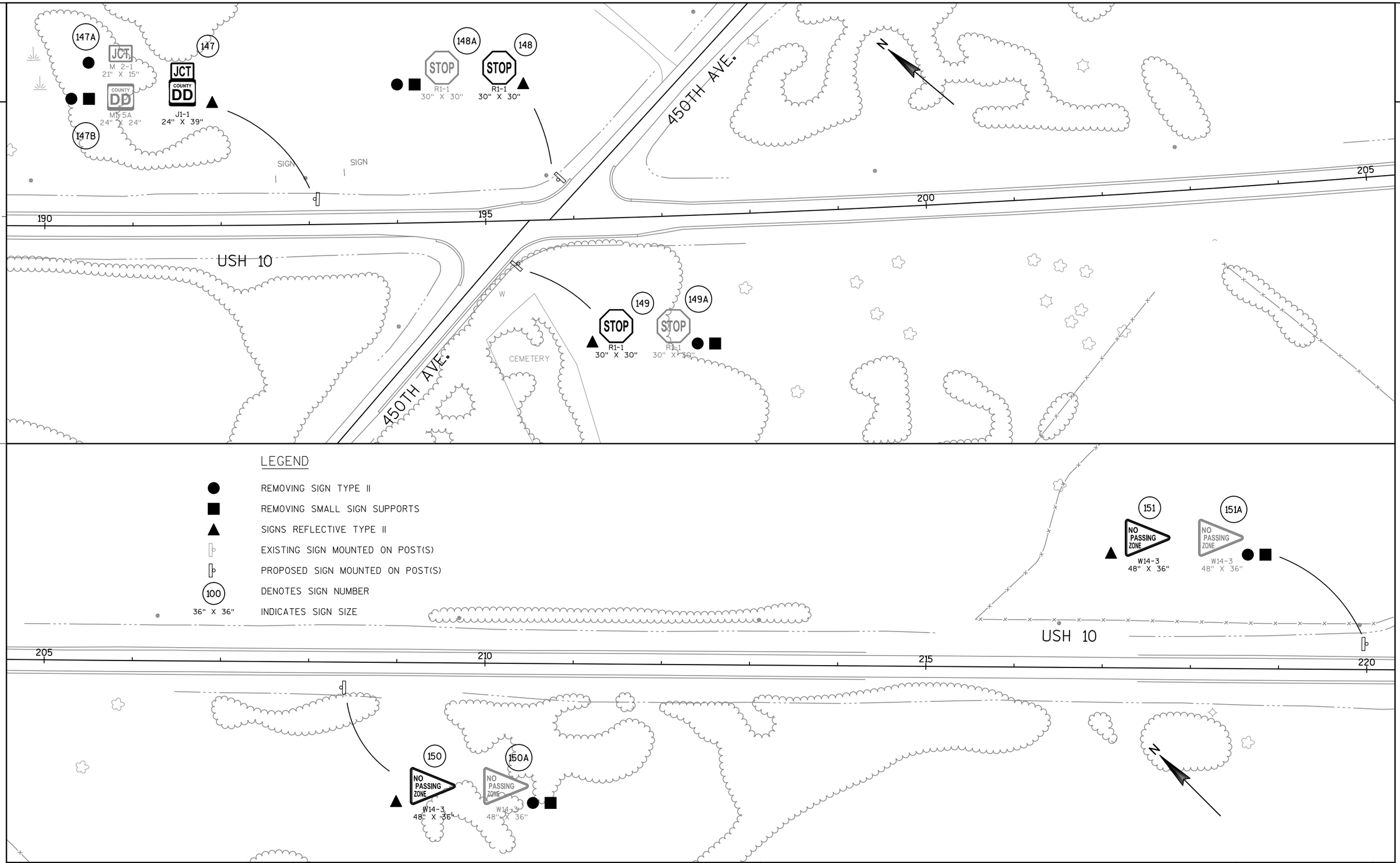

PROJECT NO:1530-07-62	HWY:USH 10	COUNTY:PIERCE	PERMANENT SIGNING	SHEET 33	E

2

151

NO PASSING ZONE

W14-3
48" X 36"

151A

NO PASSING ZONE

W14-3
48" X 36"

W

220 225 230 235

USH 10

SIGN

POOL

USH 10

235 240 245 250

W

152

RUINS

JCT
COUNTY
D

J1-1
24" X 39"

152A

JCT
M 2-1
21" X 15"

COUNTY
D

M1-5A
24" X 24"

152B

LEGEND

- REMOVING SIGN TYPE II
- REMOVING SMALL SIGN SUPPORTS
- SIGNS REFLECTIVE TYPE II
- EXISTING SIGN MOUNTED ON POST(S)
- PROPOSED SIGN MOUNTED ON POST(S)
- 100 — DENOTES SIGN NUMBER
- 36" X 36" — INDICATES SIGN SIZE

PROJECT NO: 1530-07-62	HWY: USH 10	COUNTY: PIERCE	PERMANENT SIGNING	SHEET	E

FILE NAME : X:\23046-80\10024\TECH\CADD\DRAWINGS\023201_PS.DWG PLOT DATE : 4/26/2013 1:07 PM PLOT BY : JEFF BREU PLOT NAME : ---------- PLOT SCALE : **********

2

530TH ST.

USH 10

250 255 260 265

154A STOP R1-1 30" X 30"

154 STOP R1-1 30" X 30"

153A WEST M 3-4 24" X 12"

153B 10 M1-4 24" X 24"

WEST 10 J4-1 24" X 36" 153

158A COUNTY D M1-5A 24" X 24"

158 COUNTY D J13-1 24" X 45"

M 6-1 21" X 21" 158B

159A EAST M 3-2 24" X 12"

159B 10 M1-4 24" X 24"

EAST 10 J4-1 24" X 36" 159

152 JCT COUNTY D J1-1 24" X 39"

152A JCT M 2-1 21" X 15"

COUNTY D M1-5A 24" X 24" 152B

155A COUNTY D M1-5A 24" X 24"

155B M 6-1 21" X 21"

COUNTY D J13-1 24" X 45" 155

156A STOP R1-1 30" X 30"

156 STOP R1-1 30" X 30"

CTH D.

157 10 J13-1 24" X 45"

157A 10 M1-4 24" X 24"

M 6-4 21" X 21" 157B

160A JCT M 2-1 21" X 15"

160B COUNTY D M1-5A 24" X 24"

160 JCT COUNTY D J1-1 24" X 39"

161A STOP R1-1 30" X 30"

161 STOP R1-1 30" X 30"

410TH AVE.

USH 10

265 270 275 280

162 STOP R1-1 30" X 30"

162A STOP R1-1 30" X 30"

410TH AVE.

163A NO PASSING ZONE W14-3 48" X 36"

163 NO PASSING ZONE W14-3 48" X 36"

LEGEND

- REMOVING SIGN TYPE II
- REMOVING SMALL SIGN SUPPORTS
- SIGNS REFLECTIVE TYPE II
- EXISTING SIGN MOUNTED ON POST(S)
- PROPOSED SIGN MOUNTED ON POST(S)
- (100) DENOTES SIGN NUMBER
- 36" X 36" INDICATES SIGN SIZE

PROJECT NO: 1530-07-62	HWY: USH 10	COUNTY: PIERCE	PERMANENT SIGNING	SHEET 35	E

2

2

LEGEND

- REMOVING SIGN TYPE II
- REMOVING SMALL SIGN SUPPORTS
- SIGNS REFLECTIVE TYPE II
- EXISTING SIGN MOUNTED ON POST(S)
- PROPOSED SIGN MOUNTED ON POST(S)
- (100) DENOTES SIGN NUMBER
- 36" X 36" INDICATES SIGN SIZE

N

USH 10

280 285 290 295

164 NO PASSING ZONE W14-3 48" X 36"

164A NO PASSING ZONE W14-3 48" X 36"

165 W1-2L 30" X 30"

165A W1-2L 30" X 30"

295 300 305 310

USH 10

167A W2-2 30" X 30"

167 W2-2 30" X 30"

168A W1-2R 30" X 30"

168 W1-2R 30" X 30"

N

166 STOP R1-1 30" X 30"

166A STOP R1-1 30" X 30"

510TH ST.

169 ONCOMING TRAFFIC USES CENTER LANE R3-72 30" X 36"

PROJECT NO: 1530-07-62	HWY: USH 10	COUNTY: PIERCE	PERMANENT SIGNING	SHEET 36	E

2

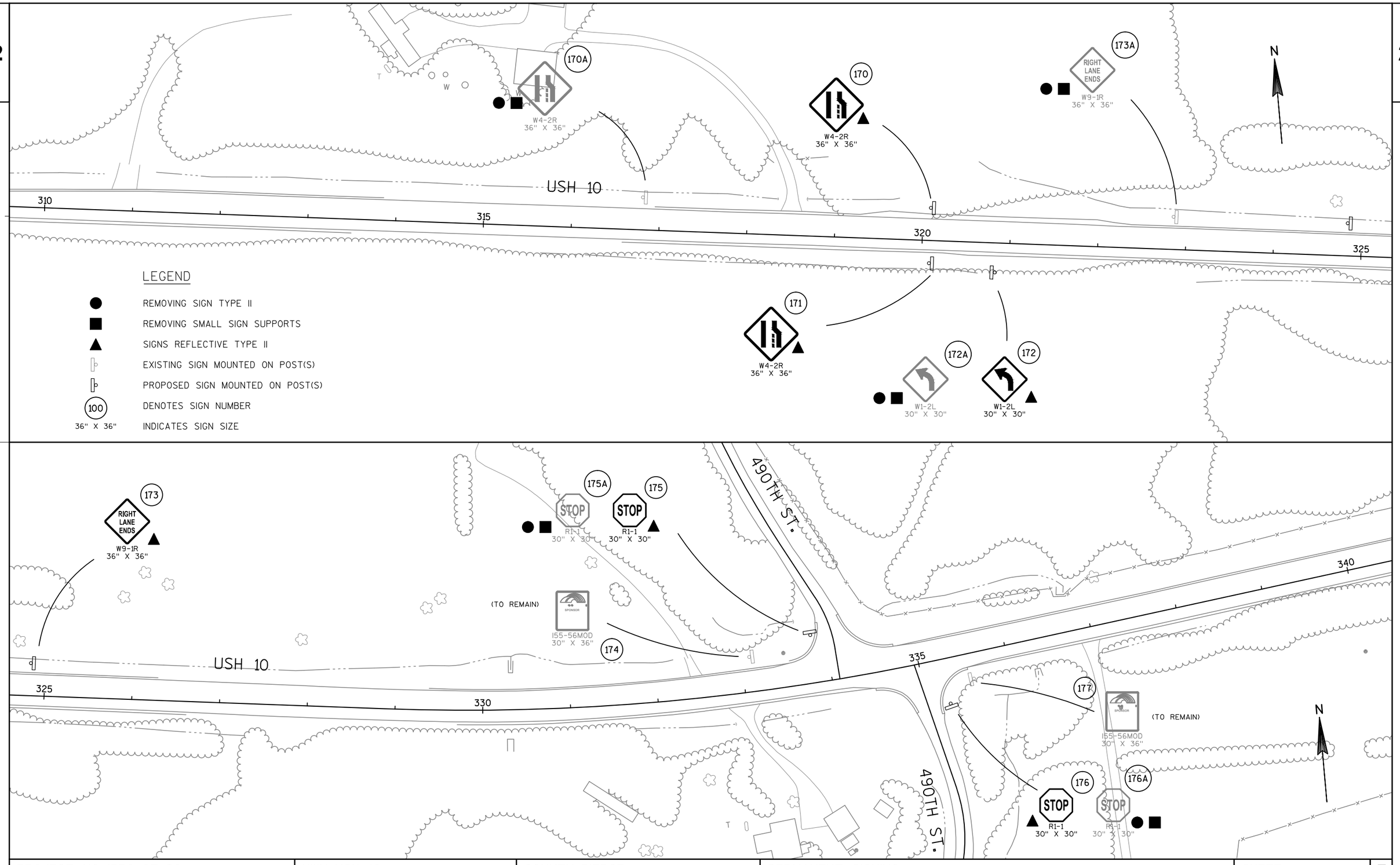

PROJECT NO: 1530-07-62	HWY: USH 10	COUNTY: PIERCE	PERMANENT SIGNING	SHEET 37	E

FILE NAME : X:\23046-80\10024\TECH\CADD\DRAWINGS\023201_PS.DWG PLOT DATE : 4/26/2013 1:08 PM PLOT BY : JEFF BREU PLOT NAME : ---------- PLOT SCALE : **********

WISDOT/CADDS SHEET 44

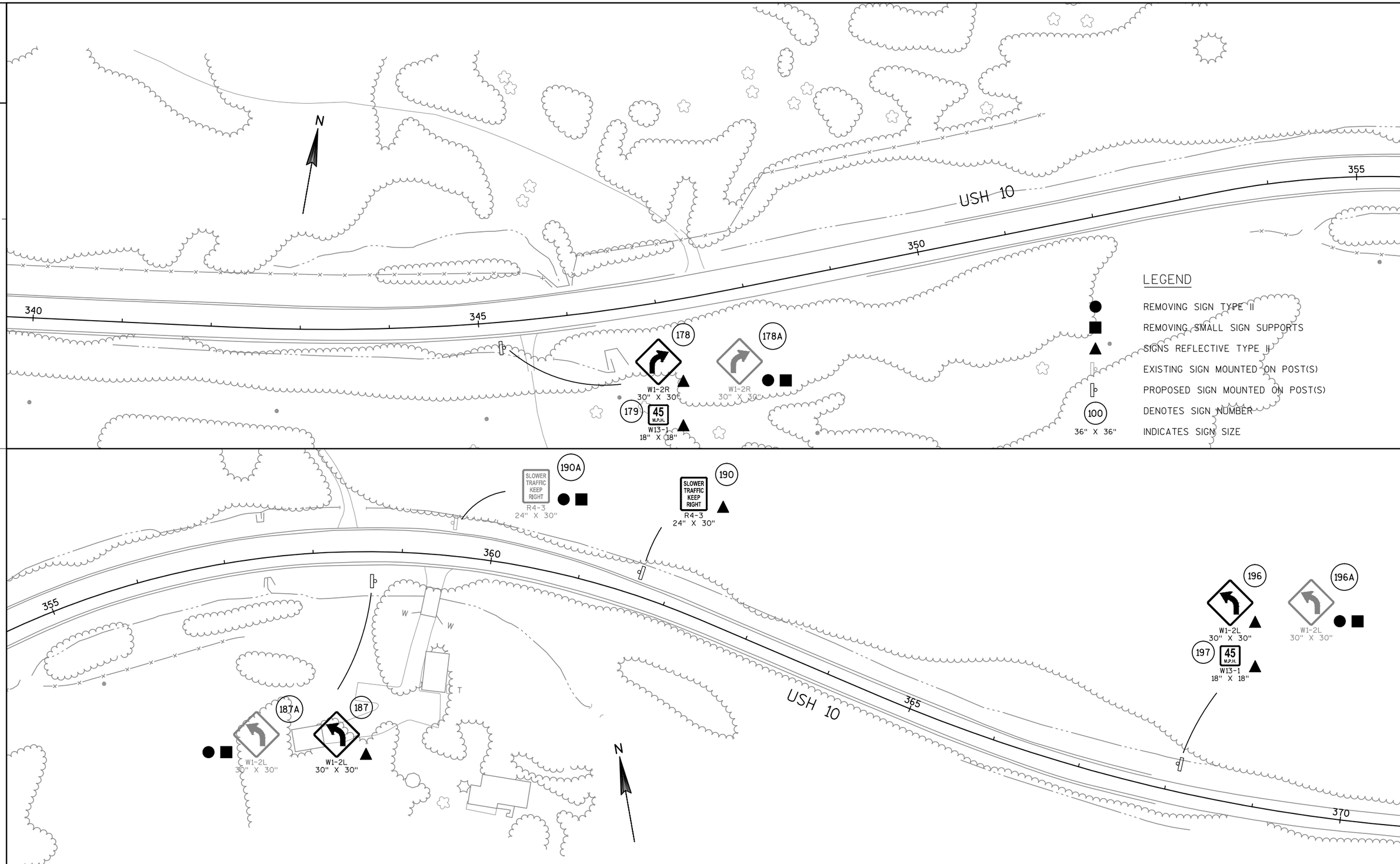

PROJECT NO:1530-07-62	HWY:USH 10	COUNTY:PIERCE	PERMANENT SIGNING	SHEET 38	E

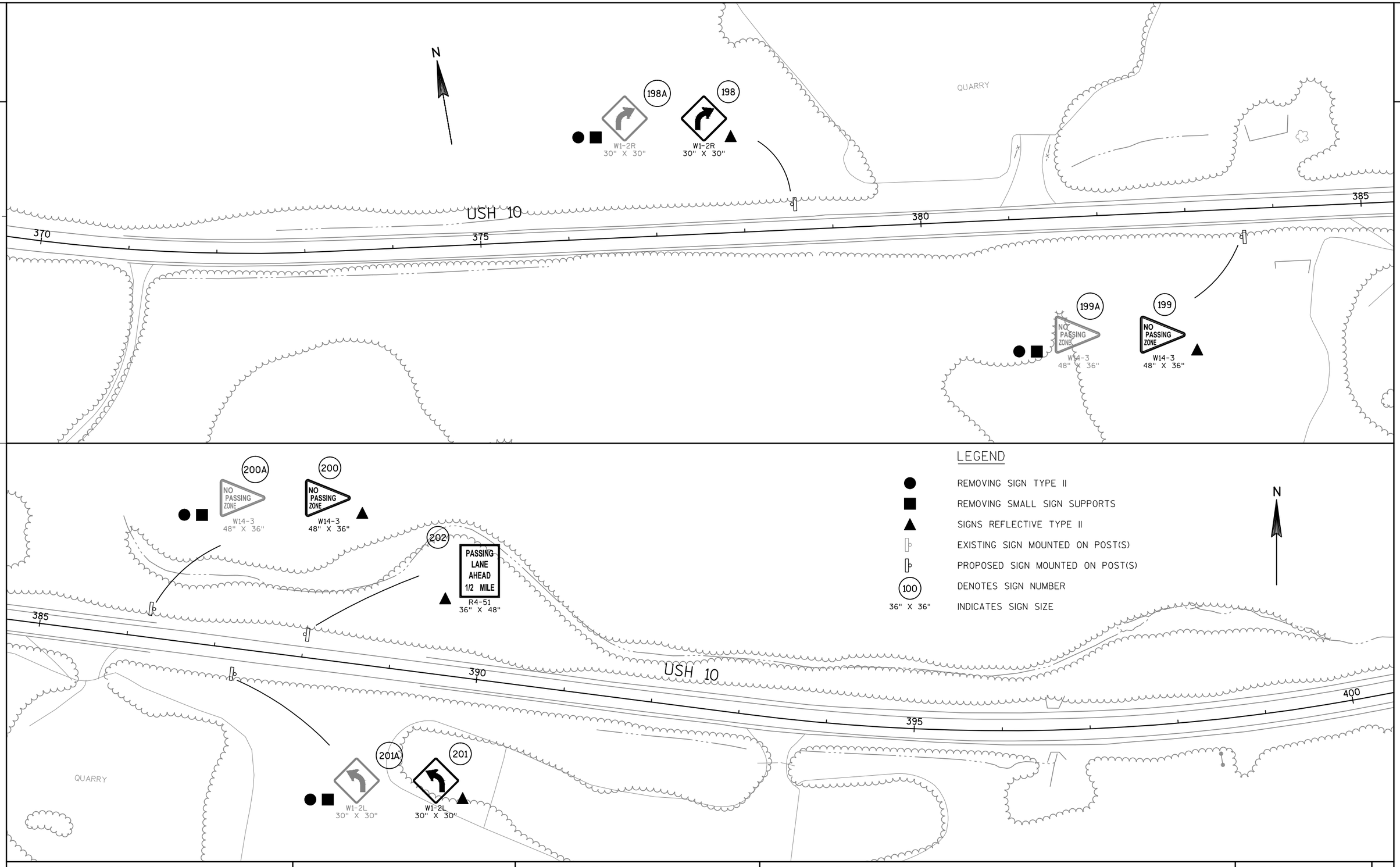

PROJECT NO:1530-07-62	HWY:USH 10	COUNTY:PIERCE	PERMANENT SIGNING	SHEET 39	E

FILE NAME : X:\23046-80\10024\TECH\CADD\DRAWINGS\023201_PS.DWG PLOT DATE : 4/26/2013 1:09 PM PLOT BY : JEFF BREU PLOT NAME : PLOT SCALE : ********** WISDOT/CADDS SHEET 44

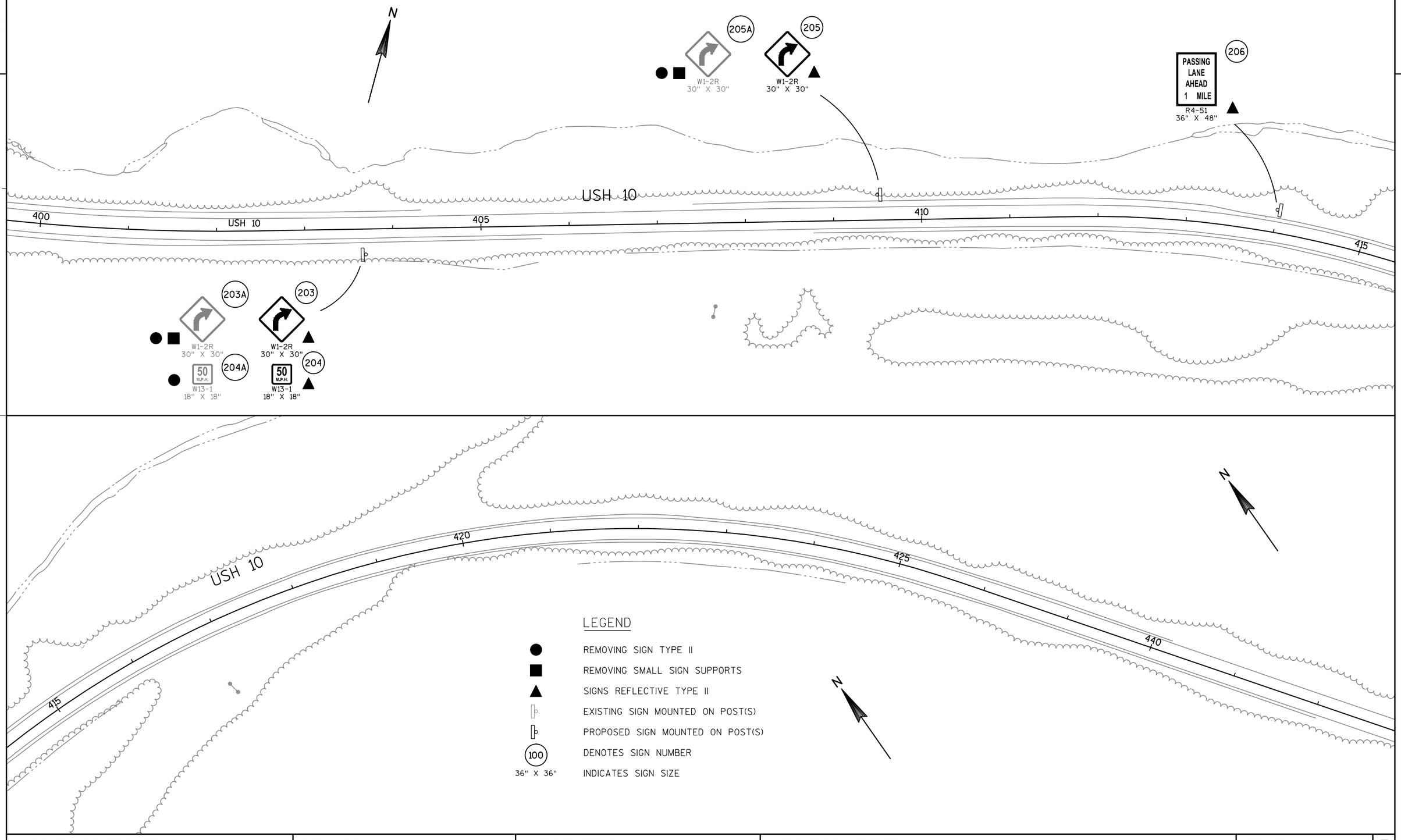

PROJECT NO: 1530-07-62	HWY: USH 10	COUNTY: PIERCE	PERMANENT SIGNING	SHEET 40	E

2

207A
W1-2L
30" X 30"

207
W1-2L
30" X 30"

208A
50 M.P.H.
W13-1
18" X 18"

208
50 M.P.H.
W13-1
18" X 18"

210A
STOP
R1-1
30" X 30"

210
STOP
R1-1
30" X 30"

400TH ST.

N

USH 10

445 450 455

209A
NO PASSING ZONE
W14-3
48" X 36"

209
NO PASSING ZONE
W14-3
48" X 36"

LEGEND

- REMOVING SIGN TYPE II
- REMOVING SMALL SIGN SUPPORTS
- SIGNS REFLECTIVE TYPE II
- EXISTING SIGN MOUNTED ON POST(S)
- PROPOSED SIGN MOUNTED ON POST(S)
- (100) DENOTES SIGN NUMBER
- 36" X 36" INDICATES SIGN SIZE

211A
NO PASSING ZONE
W14-3
48" X 36"

211
NO PASSING ZONE
W14-3
48" X 36"

N

460 465 470

USH 10

T

A/C

PROJECT NO: 1530-07-62	HWY: USH 10	COUNTY: PIERCE	PERMANENT SIGNING	SHEET 41	E

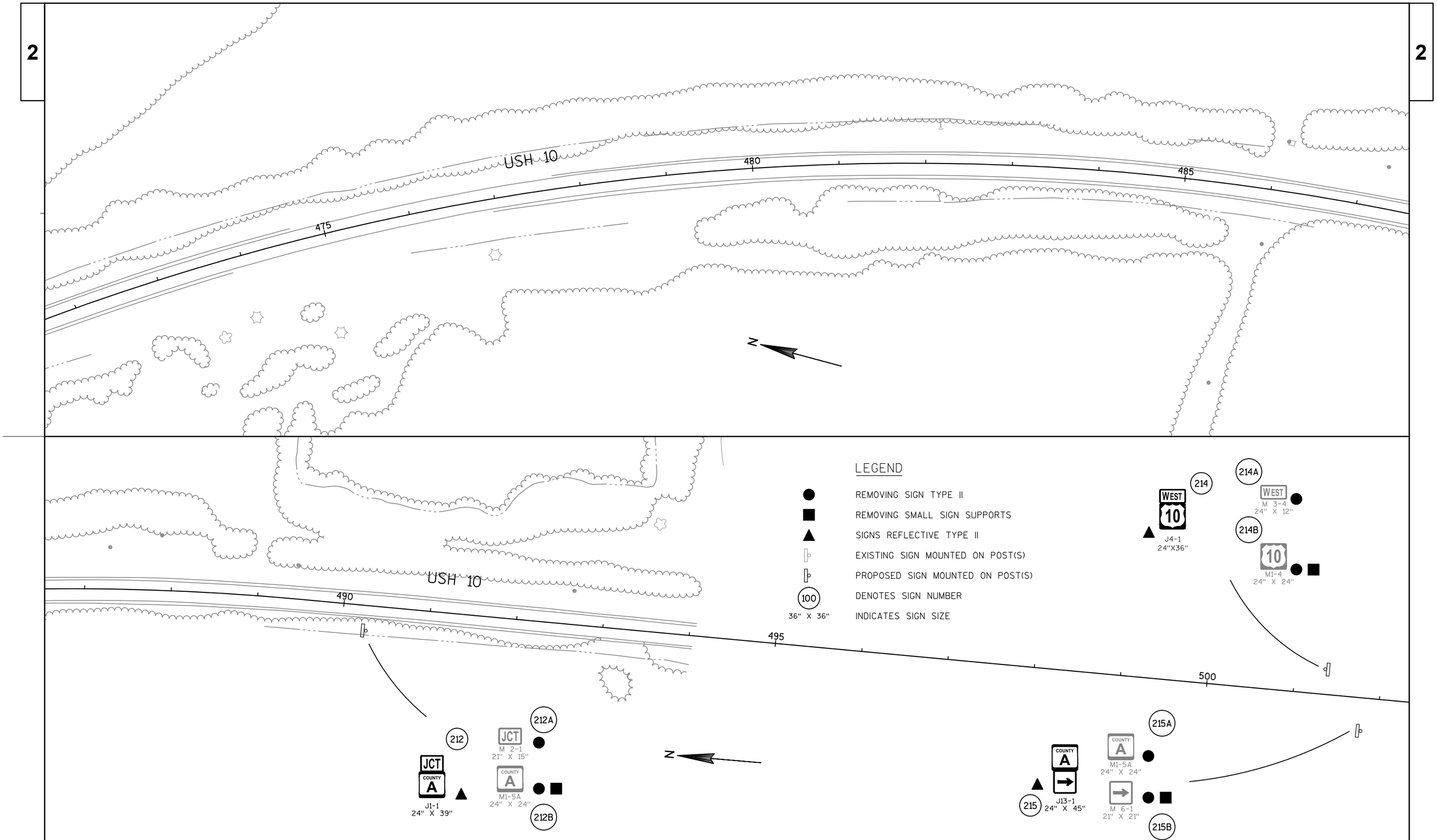

PROJECT NO:1530-07-62	HWY:USH 10	COUNTY:PIERCE	PERMANENT SIGNING	SHEET 42	E

FILE NAME : X:\23046-80\10024\TECH\CADD\DRAWINGS\023201_PS.DWG PLOT DATE : 4/26/2013 1:10 PM PLOT BY : JEFF BREU PLOT NAME : PLOT SCALE : ********** WISDOT/CADDS SHEET 44

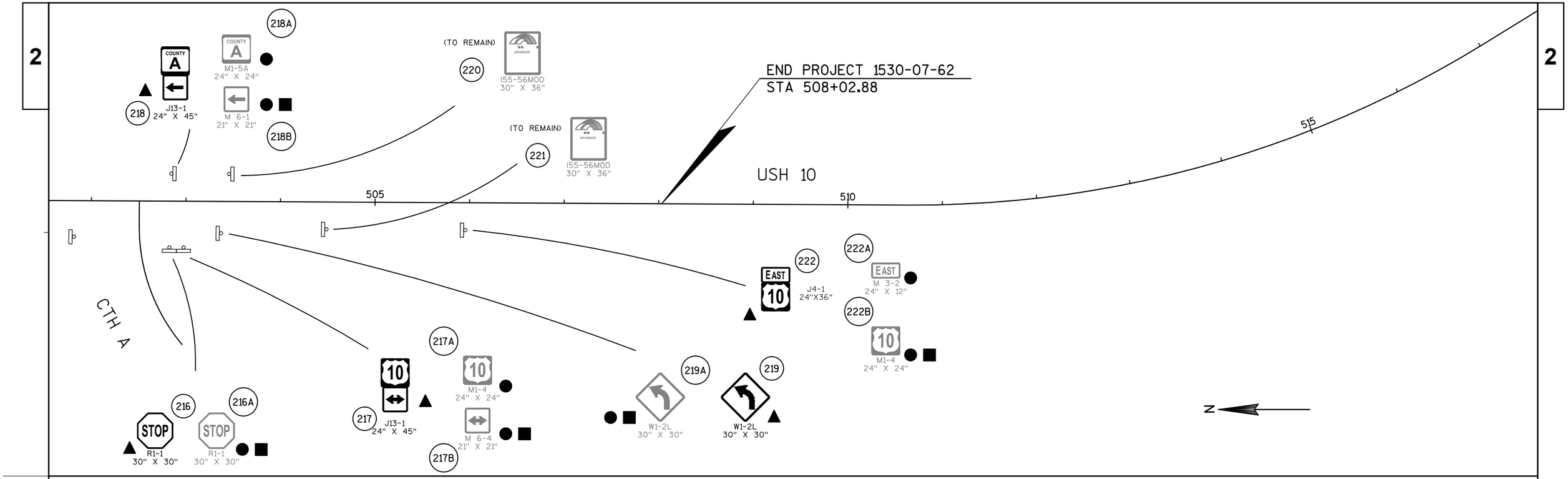

LEGEND

●	REMOVING SIGN TYPE II
■	REMOVING SMALL SIGN SUPPORTS
▲	SIGNS REFLECTIVE TYPE II
	EXISTING SIGN MOUNTED ON POST(S)
	PROPOSED SIGN MOUNTED ON POST(S)
(100)	DENOTES SIGN NUMBER
36" X 36"	INDICATES SIGN SIZE

PROJECT NO: 1530-07-62	HWY: USH 10	COUNTY: PIERCE	PERMANENT SIGNING	SHEET 43	E

NOTE:
NO PASSING ZONE LOCATIONS ARE APPROXIMATE. LOCATION OF NO PASSING ZONES WILL BE DETERMINED AFTER THE ITEM OF LOCATING NO PASSING ZONES HAS BEEN COMPLETED.

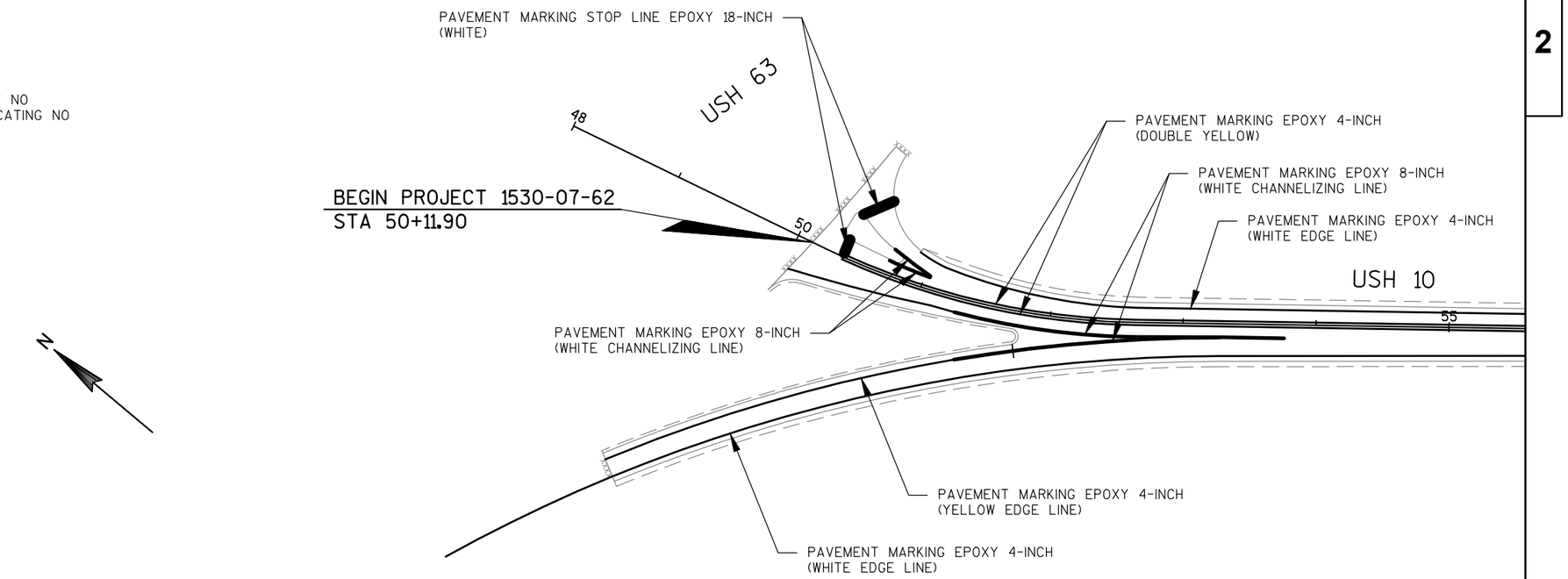

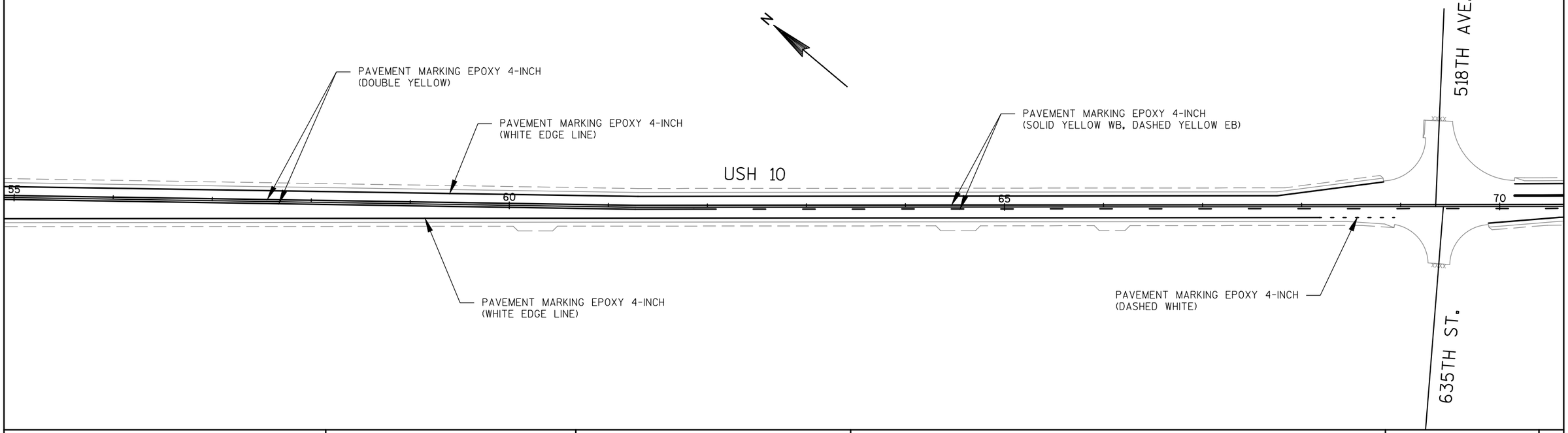

PROJECT NO:1530-07-62	HWY: USH 10	COUNTY: PIERCE	PAVEMENT MARKING PLAN	SHEET 44	E

2

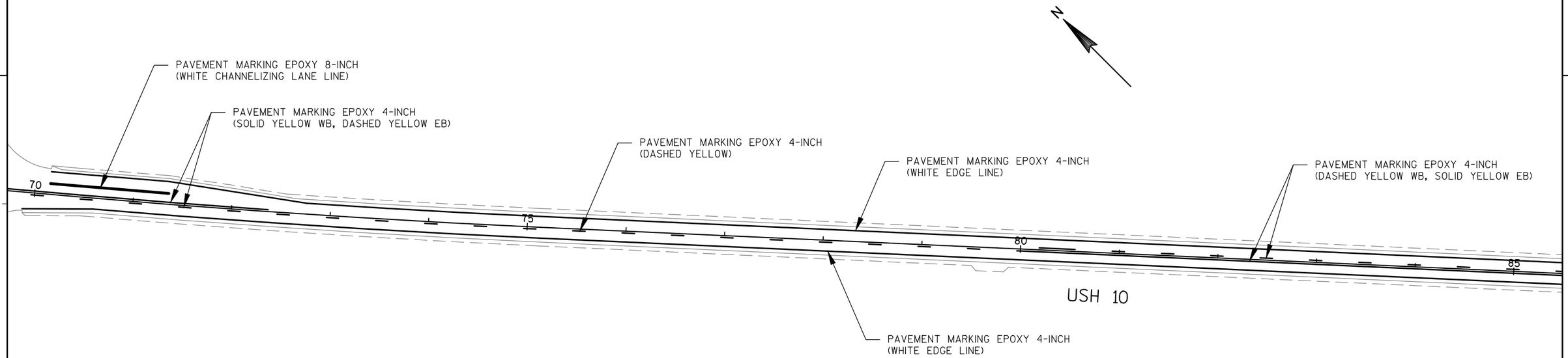

2

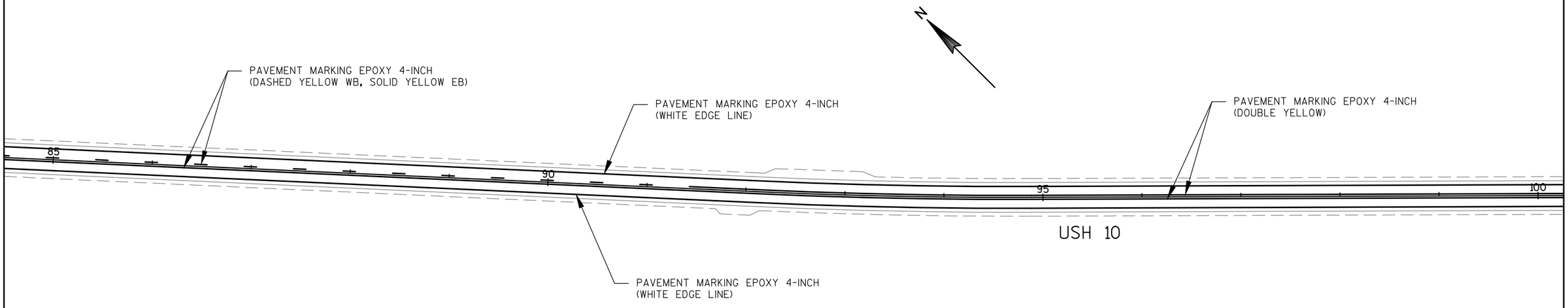

PROJECT NO: 1530-07-62	HWY: USH 10	COUNTY: PIERCE	PAVEMENT MARKING PLAN	SHEET 45	E

2

2

N

610TH ST.

PAVEMENT MARKING EPOXY 4-INCH
(DOUBLE YELLOW)

PAVEMENT MARKING EPOXY 4-INCH
(WHITE EDGE LINE)

PAVEMENT MARKING EPOXY 4-INCH
(WHITE EDGE LINE)

PAVEMENT MARKING EPOXY 4-INCH
(DASHED WHITE)

PAVEMENT MARKING EPOXY 4-INCH
(DASHED WHITE)

PAVEMENT MARKING EPOXY 4-INCH
(WHITE EDGE LINE)

100 105 110 115

USH 10

610TH ST.

N

490TH AVE.

PAVEMENT MARKING EPOXY 4-INCH
(WHITE EDGE LINE)

PAVEMENT MARKING EPOXY 4-INCH
(DOUBLE YELLOW)

PAVEMENT MARKING EPOXY 4-INCH
(WHITE EDGE LINE)

PAVEMENT MARKING EPOXY 4-INCH
(DASHED WHITE)

PAVEMENT MARKING EPOXY 4-INCH
(DASHED WHITE)

PAVEMENT MARKING EPOXY 4-INCH
(WHITE EDGE LINE)

PAVEMENT MARKING EPOXY 4-INCH
(SOLID YELLOW WB, DASHED YELLOW EB)

PAVEMENT MARKING EPOXY 4-INCH
(WHITE EDGE LINE)

115 120 125 130

USH 10

490TH AVE.

PROJECT NO:1530-07-62	HWY: USH 10	COUNTY: PIERCE	PAVEMENT MARKING PLAN	SHEET 46	E

FILE NAME : X:\23046-80\10024\TECH\CADD\DRAWINGS\024501_PM.DWG PLOT DATE : 4/26/2013 1:12 PM PLOT BY : JEFF BREU PLOT NAME : _____ PLOT SCALE : 1" = 100'_XREF

2

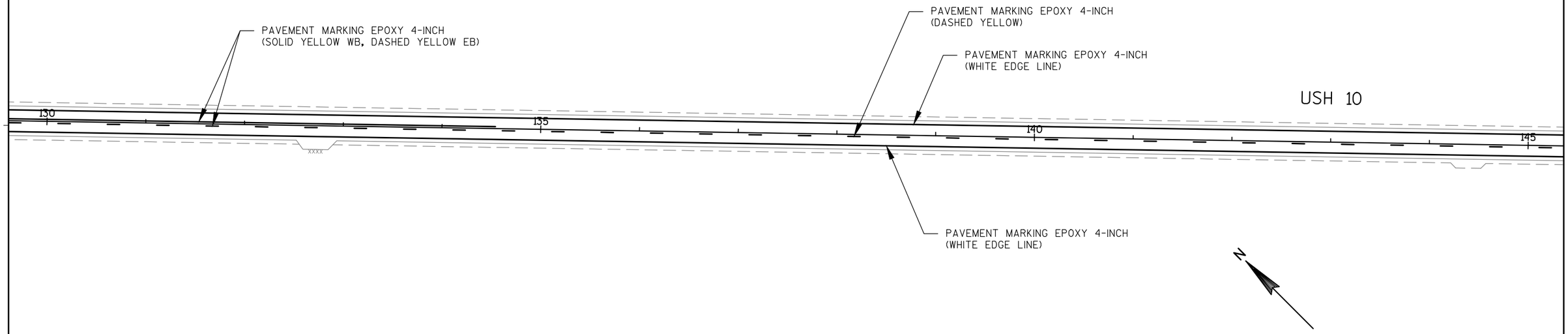

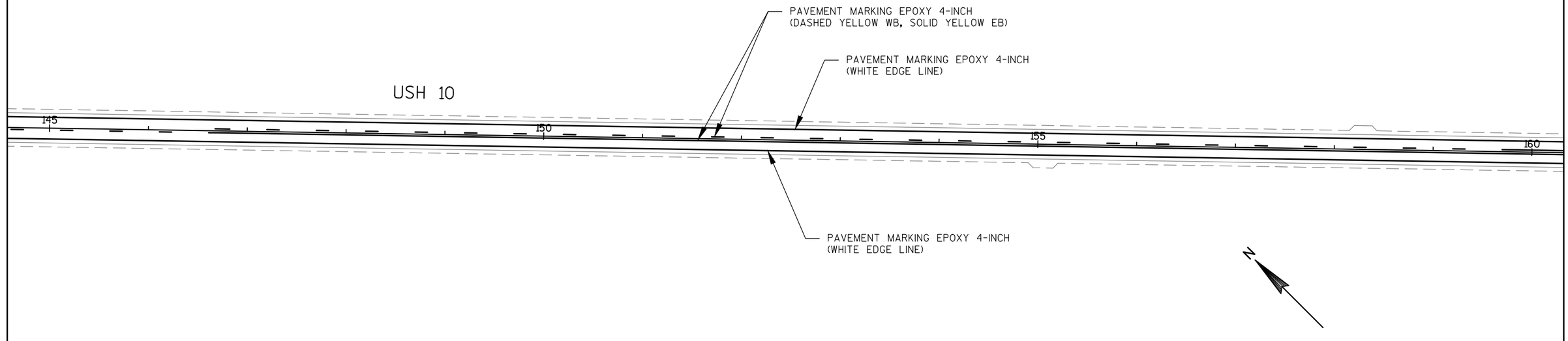

PROJECT NO: 1530-07-62	HWY: USH 10	COUNTY: PIERCE	PAVEMENT MARKING PLAN	SHEET 47	E

FILE NAME : X:\23046-80\10024\TECH\CADD\DRAWINGS\024501_PM.DWG PLOT DATE : 4/26/2013 1:12 PM PLOT BY : JEFF BREU PLOT NAME : ---------- PLOT SCALE : 1" = 100'_XREF

2

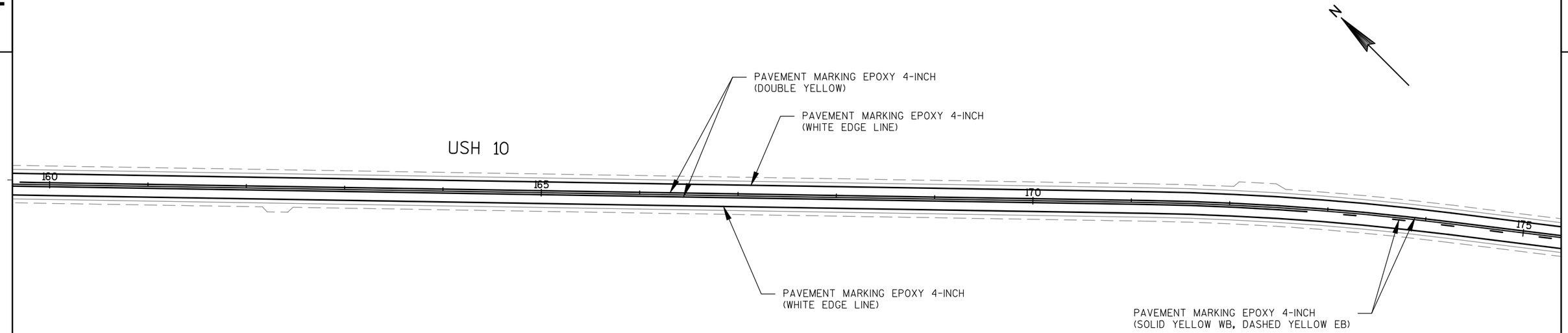

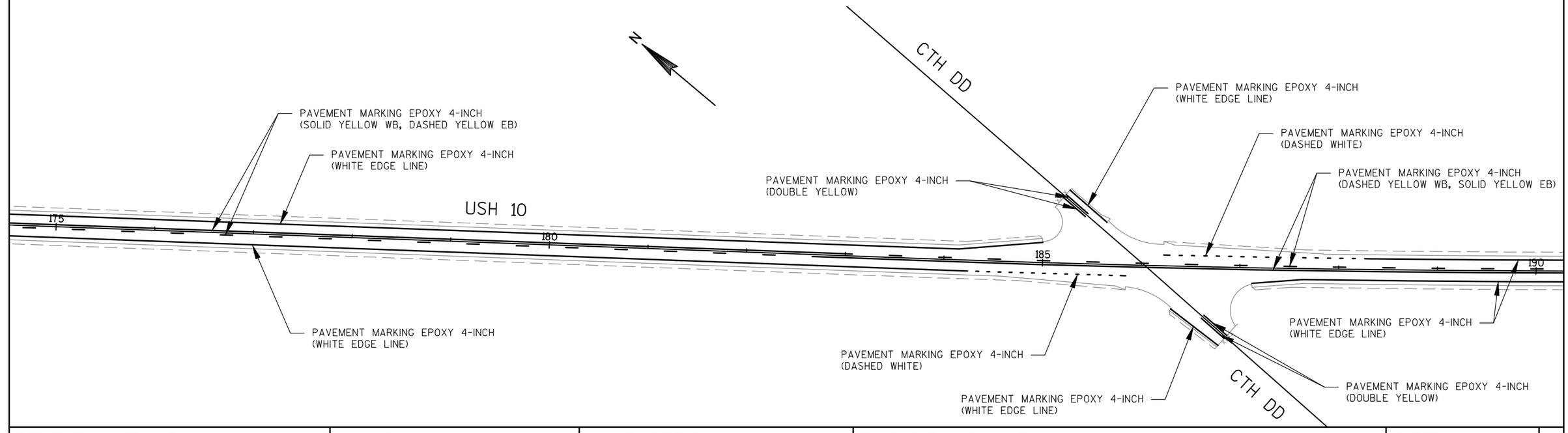

PROJECT NO:1530-07-62	HWY: USH 10	COUNTY: PIERCE	PAVEMENT MARKING PLAN	SHEET 48	E

2

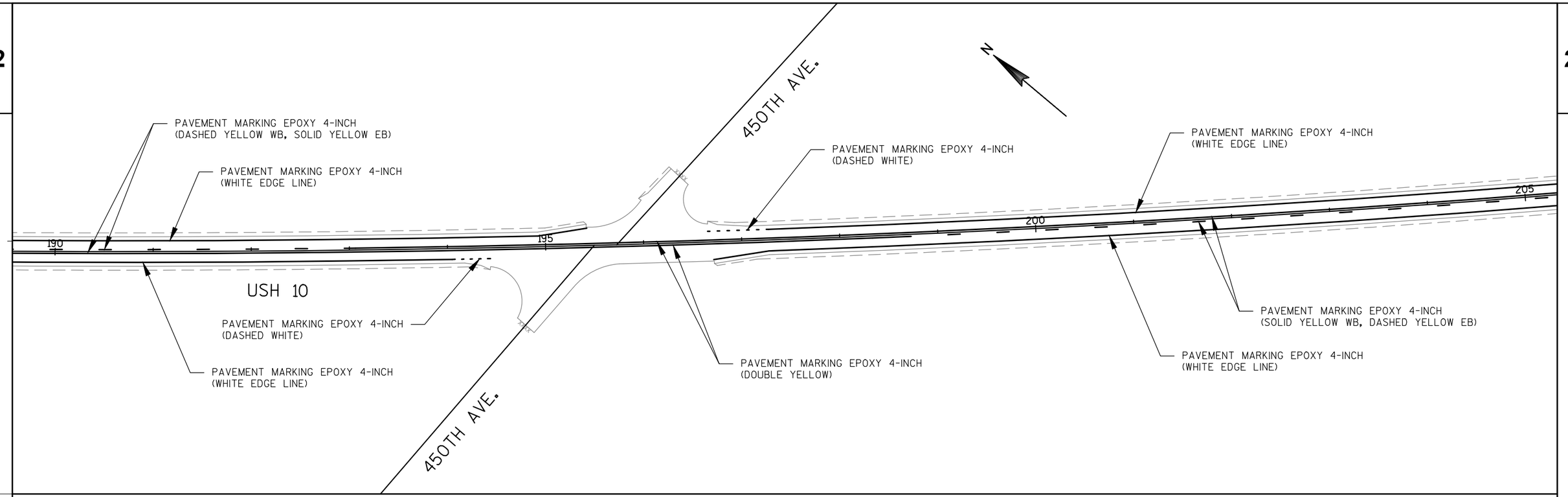

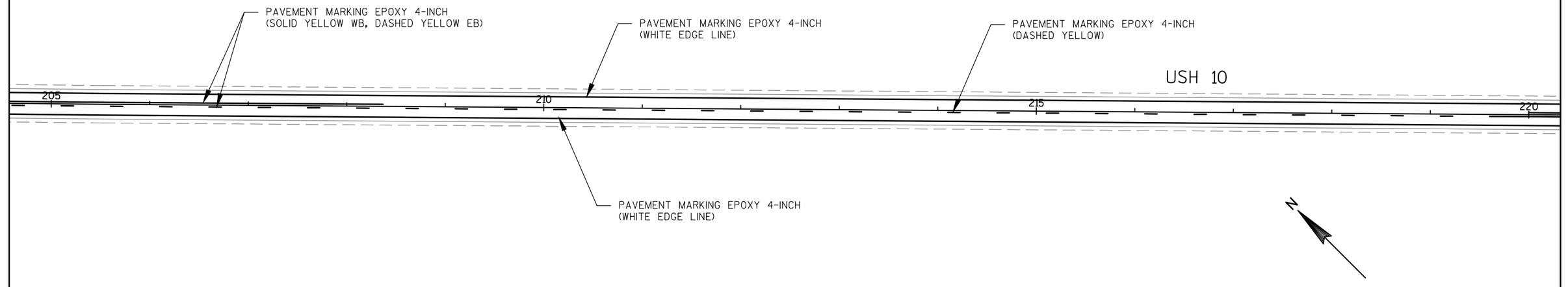

PROJECT NO: 1530-07-62	HWY: USH 10	COUNTY: PIERCE	PAVEMENT MARKING PLAN	SHEET 49	E

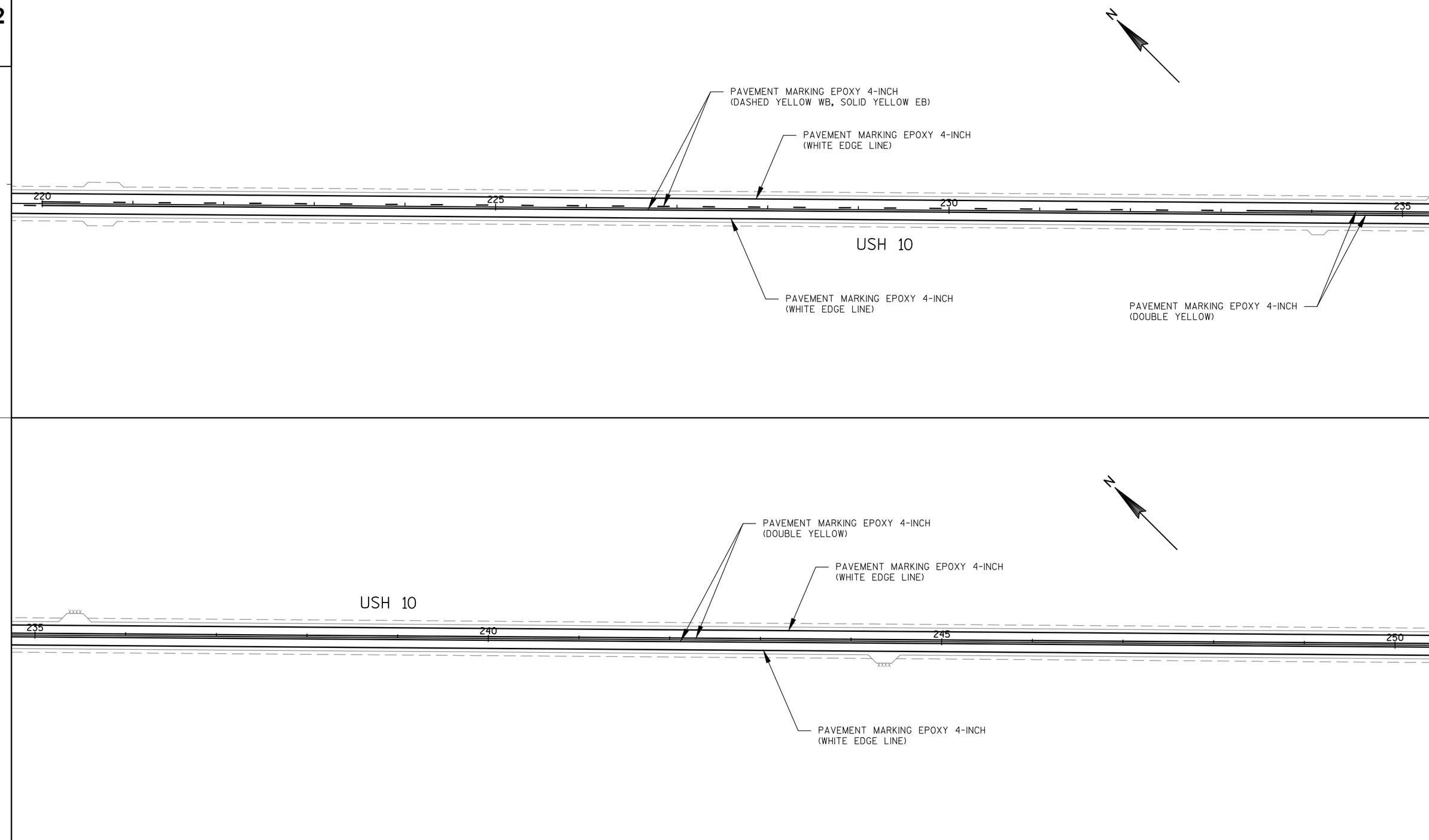

PROJECT NO:1530-07-62	HWY:USH 10	COUNTY:PIERCE	PAVEMENT MARKING PLAN	SHEET 50	E

2

2

N

530TH ST.

PAVEMENT MARKING EPOXY 4-INCH
(DOUBLE YELLOW)

PAVEMENT MARKING EPOXY 4-INCH
(WHITE EDGE LINE)

USH 10

250

255

260

265

PAVEMENT MARKING EPOXY 4-INCH
(WHITE EDGE LINE)

PAVEMENT MARKING EPOXY 4-INCH
(DASHED WHITE)

PAVEMENT MARKING EPOXY 4-INCH
(DASHED WHITE)

PAVEMENT MARKING EPOXY 4-INCH
(DOUBLE YELLOW)

PAVEMENT MARKING EPOXY 4-INCH
(DOUBLE YELLOW)

PAVEMENT MARKING EPOXY 4-INCH
(WHITE EDGE LINE)

PAVEMENT MARKING EPOXY 4-INCH
(WHITE EDGE LINE)

PAVEMENT MARKING EPOXY 4-INCH
(WHITE EDGE LINE)

CTH D.

N

410TH AVE.

PAVEMENT MARKING EPOXY 4-INCH
(DOUBLE YELLOW)

PAVEMENT MARKING EPOXY 4-INCH
(WHITE EDGE LINE)

PAVEMENT MARKING EPOXY 4-INCH
(SOLID YELLOW WB, DASHED YELLOW EB)

PAVEMENT MARKING EPOXY 4-INCH
(DASHED WHITE)

USH 10

265

270

275

280

PAVEMENT MARKING EPOXY 4-INCH
(WHITE EDGE LINE)

PAVEMENT MARKING EPOXY 4-INCH
(DASHED WHITE)

PAVEMENT MARKING EPOXY 4-INCH
(WHITE EDGE LINE)

PAVEMENT MARKING EPOXY 4-INCH
(DASHED YELLOW)

PAVEMENT MARKING EPOXY 4-INCH
(WHITE EDGE LINE)

410TH AVE.

PROJECT NO:1530-07-62	HWY: USH 10	COUNTY: PIERCE	PAVEMENT MARKING PLAN	SHEET	E

FILE NAME : X:\23046-80\10024\TECH\CADD\DRAWINGS\024501_PM.DWG PLOT DATE : 4/26/2013 1:13 PM PLOT BY : JEFF BREU PLOT NAME : _____ PLOT SCALE : 1" = 100'_XREF

WISDOT/CADDS SHEET 44

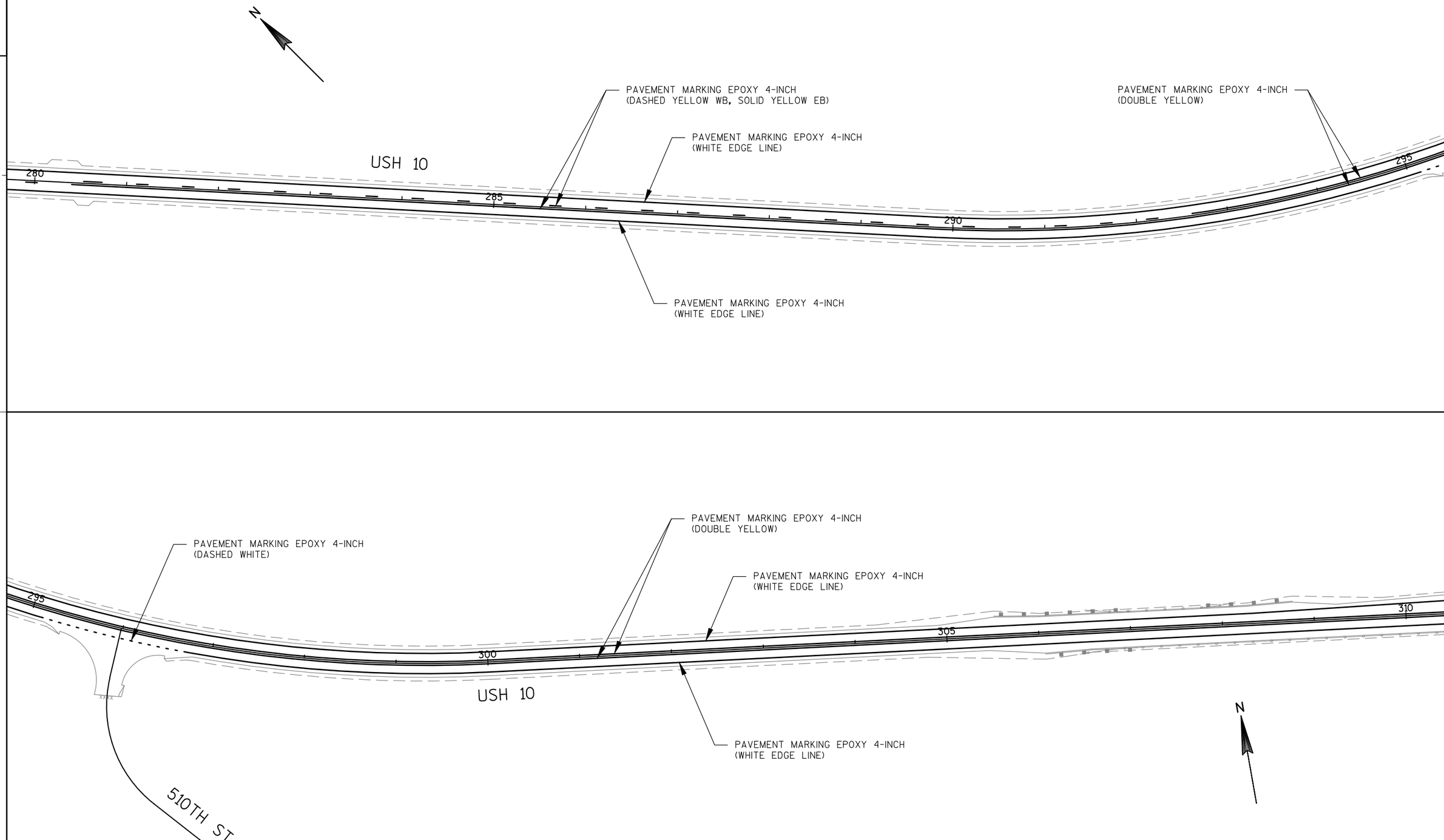

PROJECT NO:1530-07-62	HWY:USH 10	COUNTY:PIERCE	PAVEMENT MARKING PLAN	SHEET 52	E

FILE NAME : X:\23046-80\10024\TECH\CADD\DRAWINGS\024501_PM.DWG PLOT DATE : 4/26/2013 1:13 PM PLOT BY : JEFF BREU PLOT NAME : PLOT SCALE : 1" = 100'_XREF

WISDOT/CADDS SHEET 44

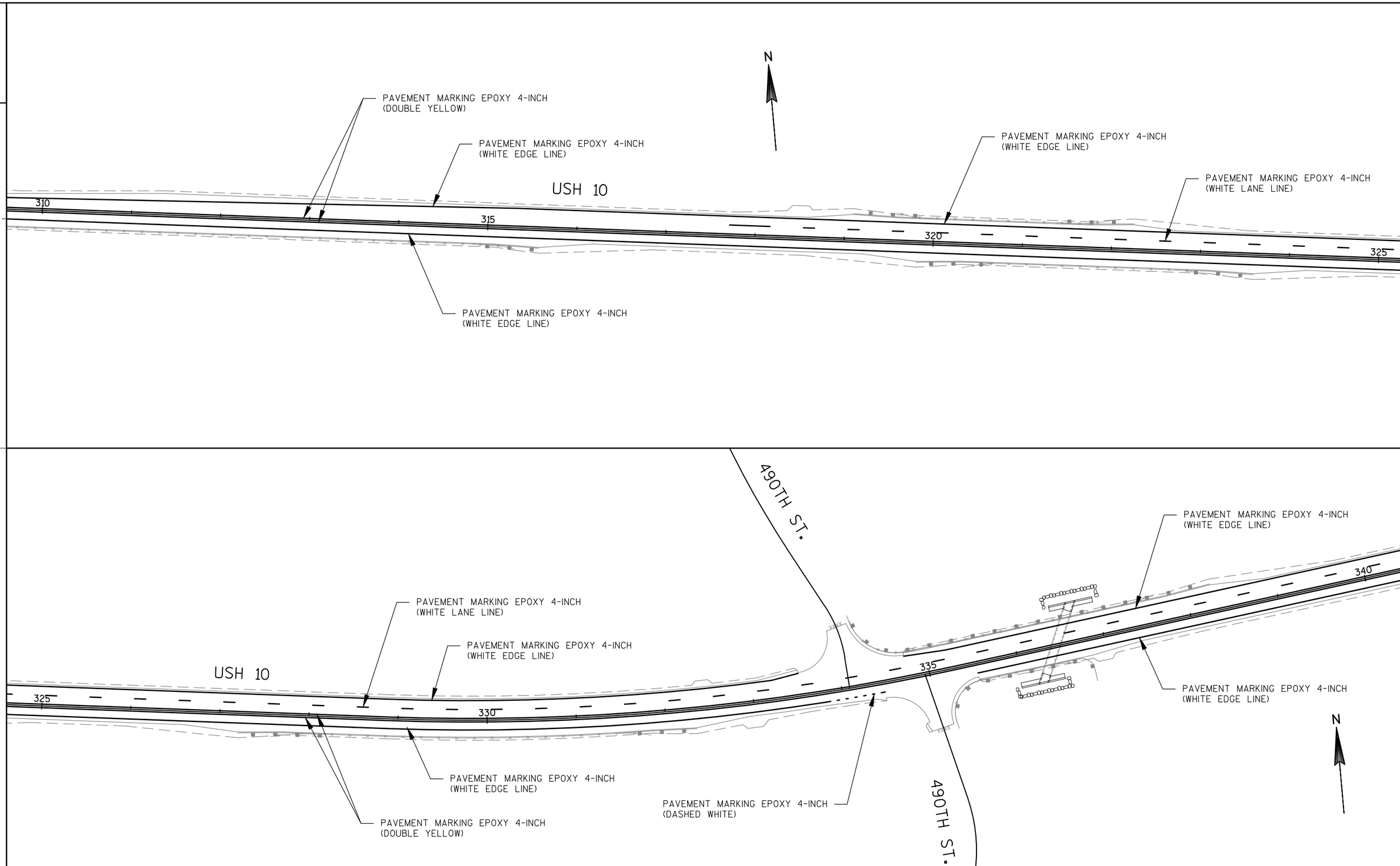

PROJECT NO:1530-07-62	HWY:USH 10	COUNTY:PIERCE	PAVEMENT MARKING PLAN	SHEET 53	E

FILE NAME : X:\23046-80\10024\TECH\CADD\DRAWINGS\024501_PM.DWG PLOT DATE : 4/26/2013 1:13 PM PLOT BY : JEFF BREU PLOT NAME : PLOT SCALE : 1" = 100'_XREF

WISDOT/CADDS SHEET 44

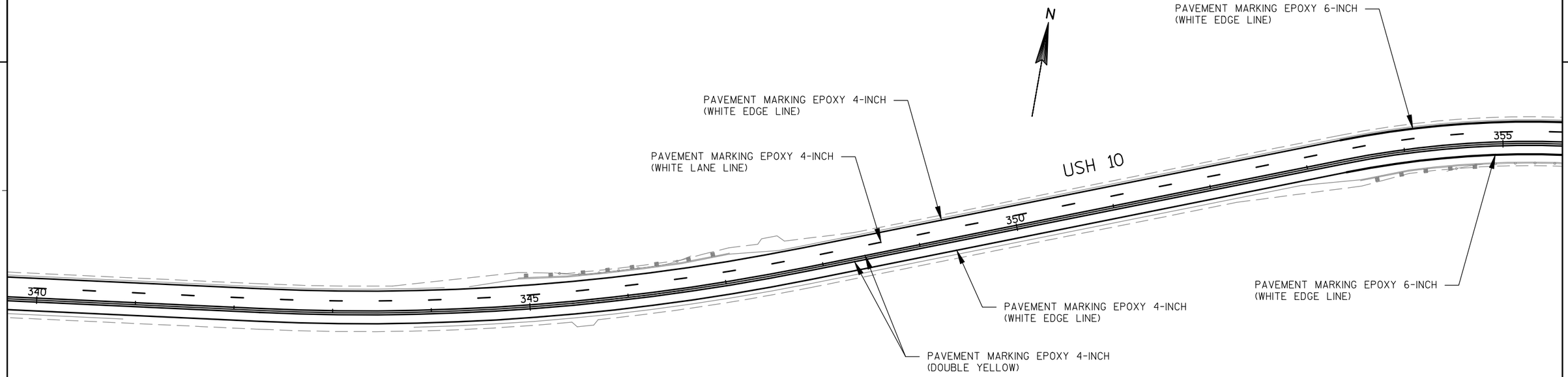

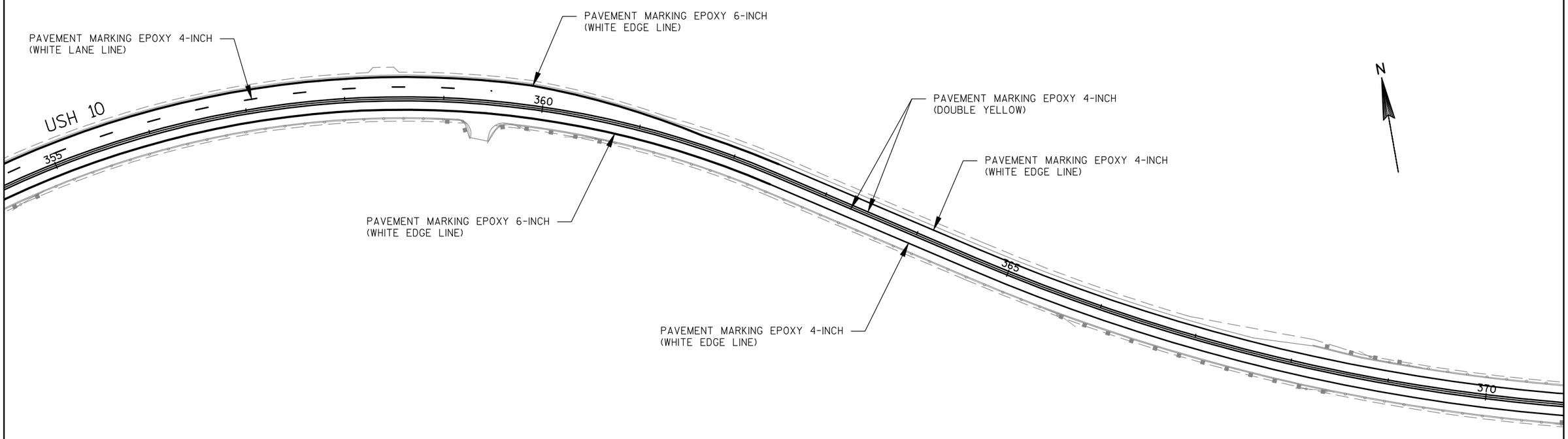

PROJECT NO: 1530-07-62	HWY: USH 10	COUNTY: PIERCE	PAVEMENT MARKING PLAN	SHEET 54	E

2

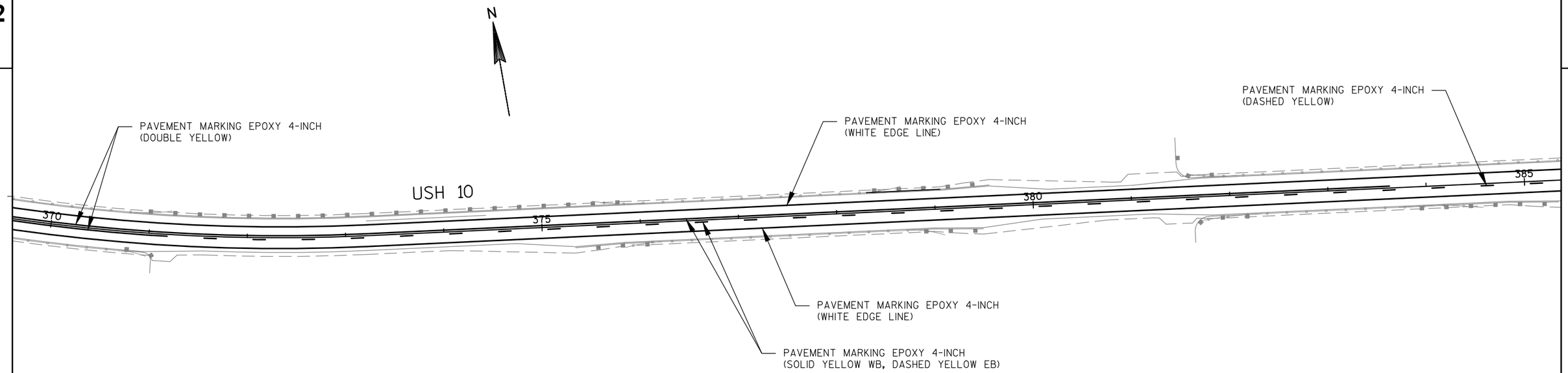

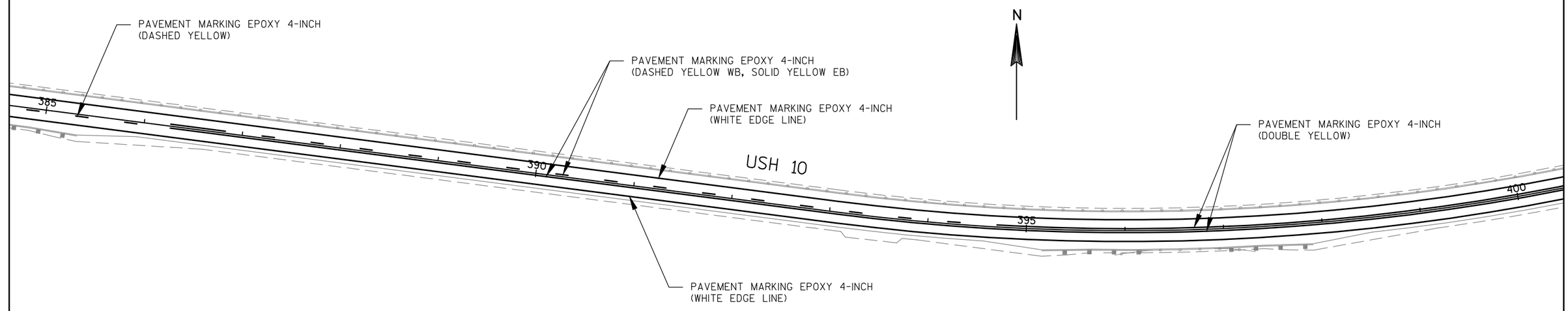

PROJECT NO:1530-07-62	HWY: USH 10	COUNTY: PIERCE	PAVEMENT MARKING PLAN	SHEET 55	E

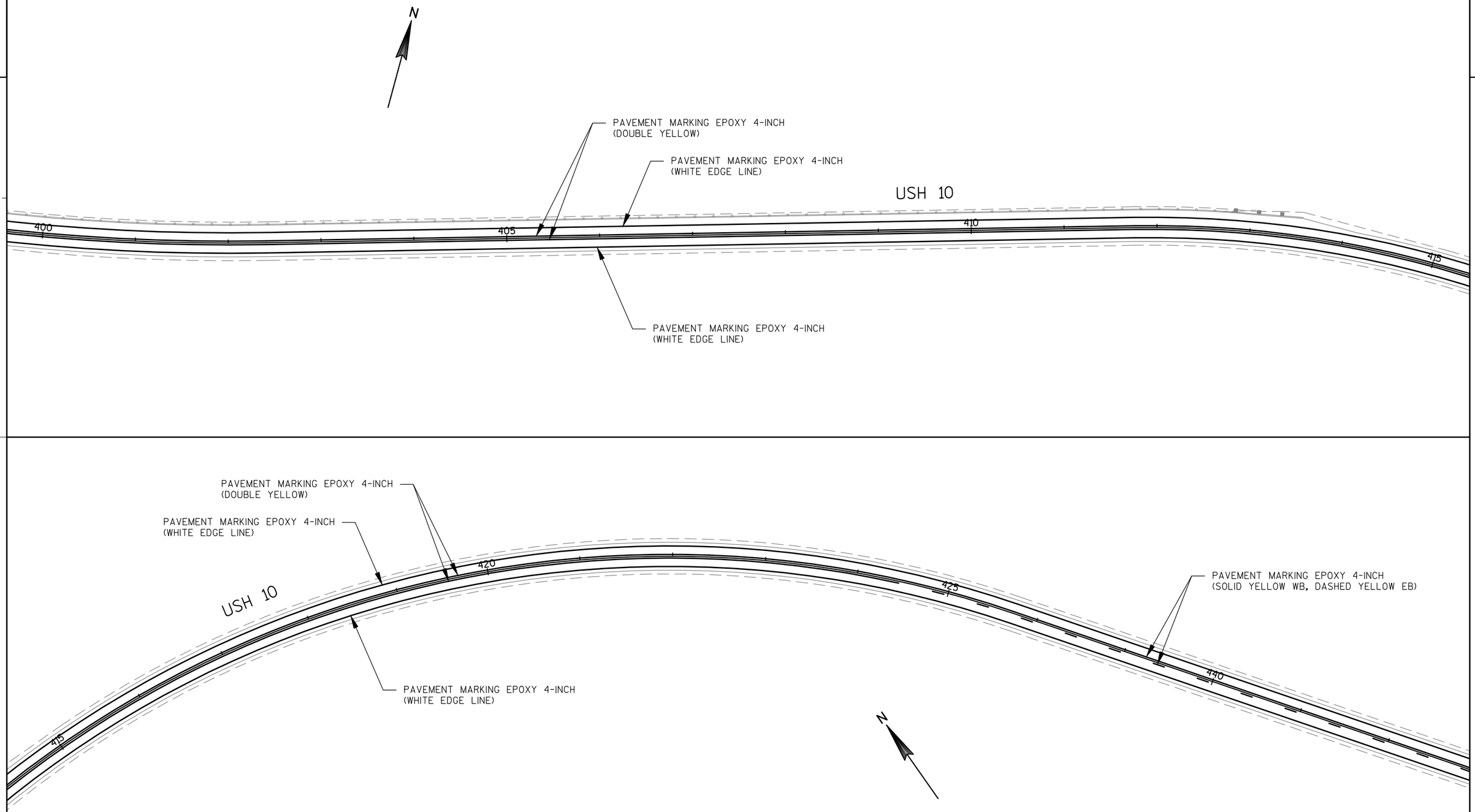

PROJECT NO:1530-07-62	HWY:USH 10	COUNTY:PIERCE	PAVEMENT MARKING PLAN	SHEET 56	E

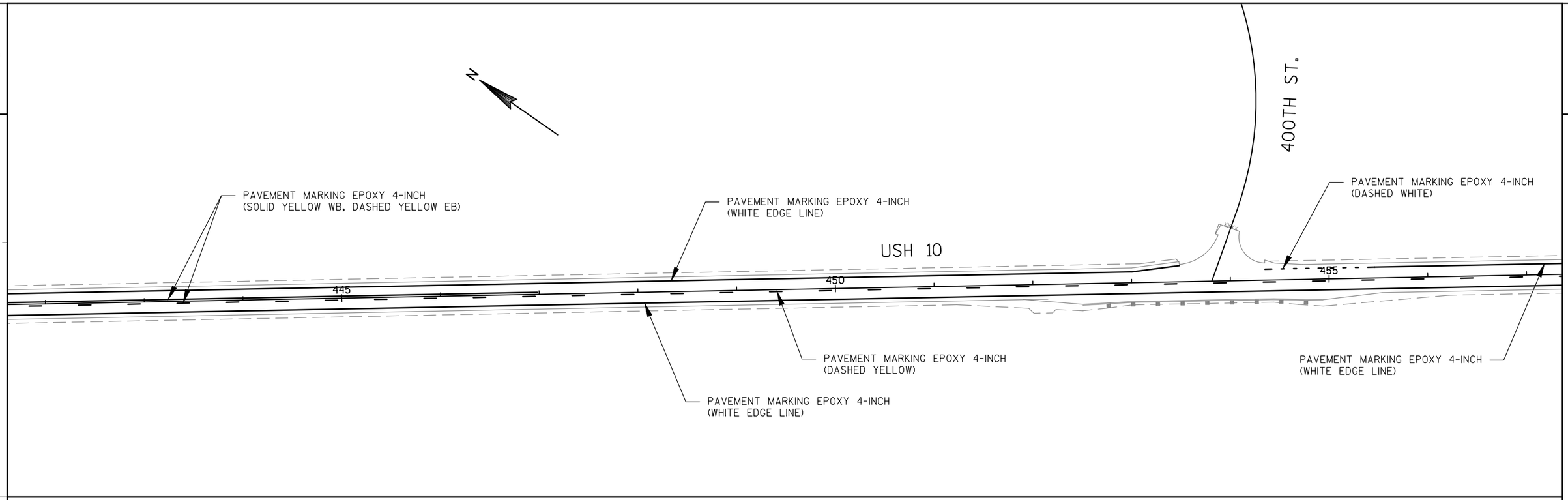

PROJECT NO:1530-07-62	HWY:USH 10	COUNTY:PIERCE	PAVEMENT MARKING PLAN	SHEET 57	E

2

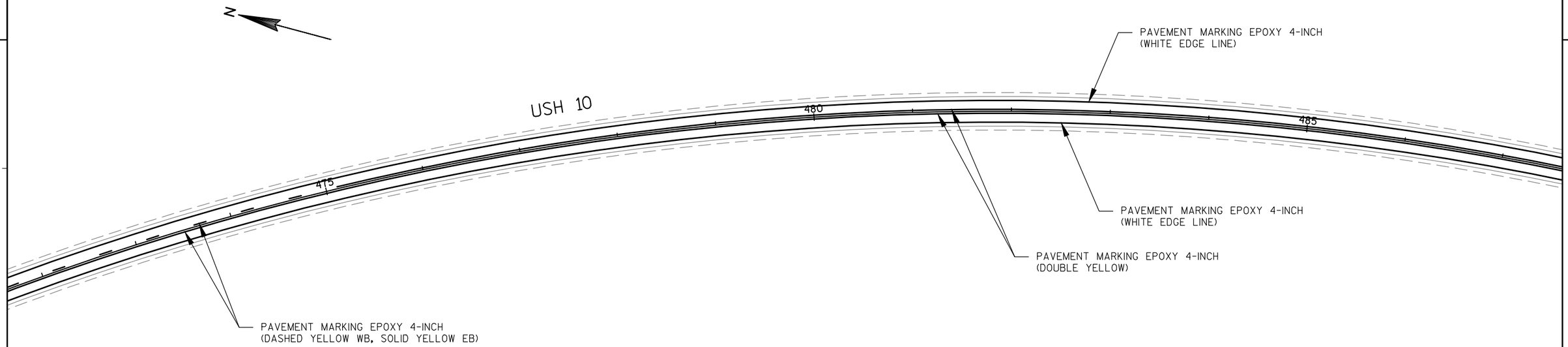

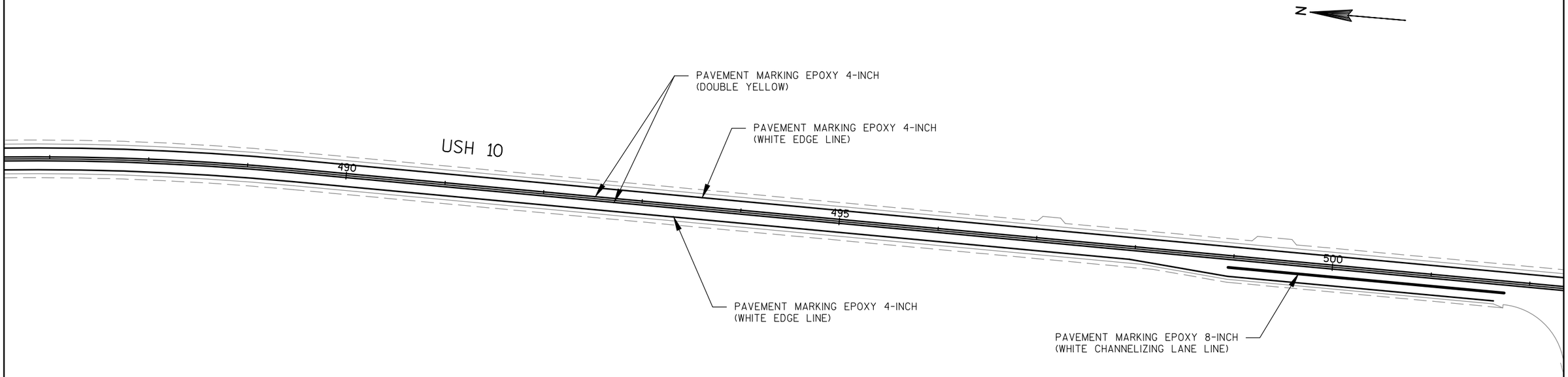

PROJECT NO: 1530-07-62	HWY: USH 10	COUNTY: PIERCE	PAVEMENT MARKING PLAN	SHEET 58	E

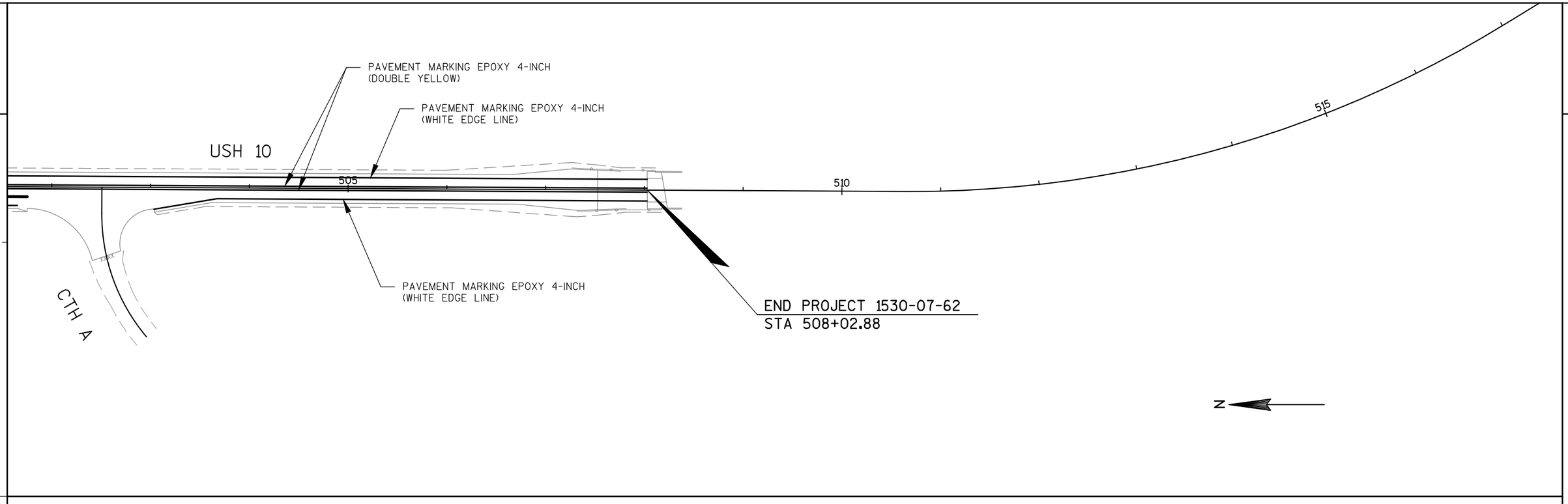

PROJECT NO:1530-07-62	HWY:USH 10	COUNTY:PIERCE	PAVEMENT MARKING PLAN	SHEET 59	E

FILE NAME : X:\23046-80\10024\TECH\CADD\DRAWINGS\024501_PM.DWG PLOT DATE : 4/26/2013 1:15 PM PLOT BY : JEFF BREU PLOT NAME : PLOT SCALE : 1" = 100'_XREF

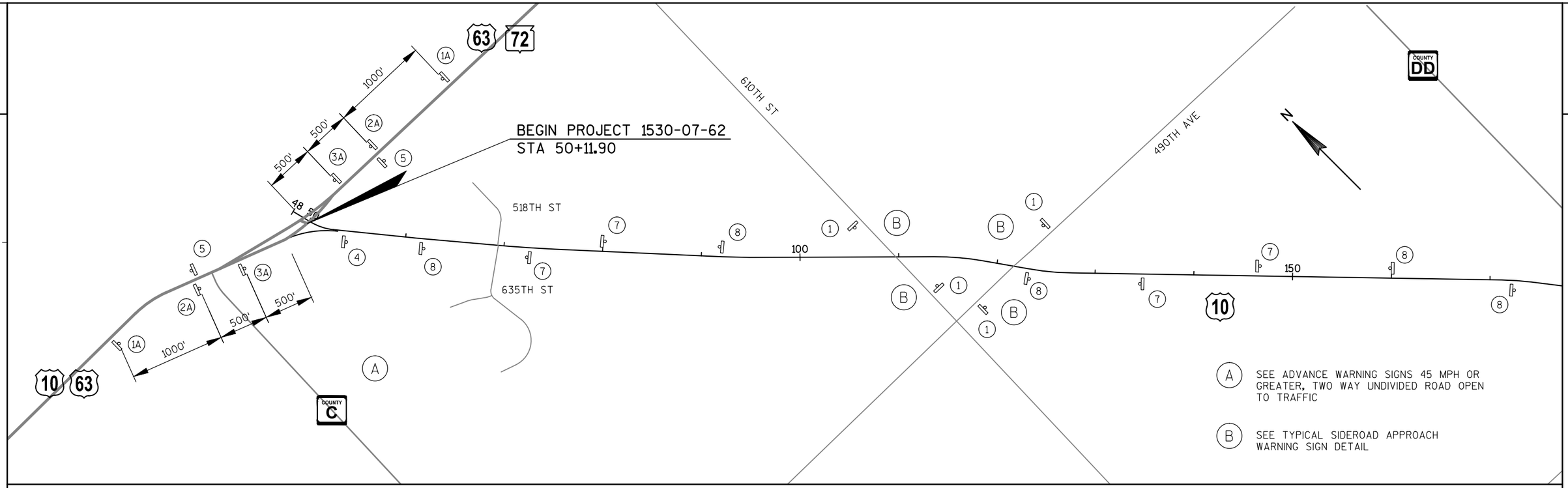

A SEE ADVANCE WARNING SIGNS 45 MPH OR GREATER, TWO WAY UNDIVIDED ROAD OPEN TO TRAFFIC

B SEE TYPICAL SIDEROAD APPROACH WARNING SIGN DETAIL

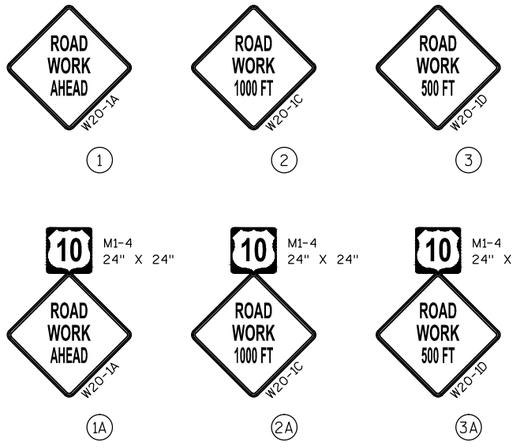

NOTES:

REFER TO SDD "TRAFFIC CONTROL, ADVANCE WARNING SIGNS 45 M.P.H. OR GREATER TWO-WAY UNDIVIDED ROAD OPEN TO TRAFFIC" FOR SIGN SPACING.

FOR TRAFFIC CONTROL SIGNING DURING MOVING OPERATIONS, SEE SDD "TRAFFIC CONTROL FOR LANE CLOSURE (SUITABLE FOR MOVING OPERATIONS)".

FOR TRAFFIC CONTROL SIGNING DURING SHOULDER WORK AT BEAMGUARD, SEE SDD "TRAFFIC CONTROL, WORK ON SHOULDER OR PARKING LANE, UNDIVIDED ROADWAY".

ALL SIGNS ARE 48" X 48" UNLESS NOTED.

LOCAL ACCESS SHALL BE MAINTAINED AT ALL TIMES.

THE EXACT NUMBER, LOCATION AND SPACING OF ALL SIGNS AND DEVICES MAY BE ADJUSTED TO FIT FIELD CONDITIONS AS DIRECTED BY THE ENGINEER.

SIGNS NUMBERED 6, 7 AND 8 SHALL BE PLACED PRIOR TO MILLING OPERATION. THESE SIGNS SHALL REMAIN UNTIL PAVEMENT MARKING IS PLACED ON THE FINAL LIFT OF MAINLINE ASPHALTIC PAVEMENT.

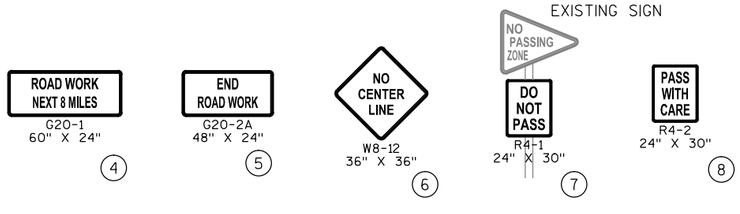

PROJECT NO: 1530-07-62	HWY: USH 10	COUNTY: PIERCE	PLAN: TRAFFIC CONTROL	SHEET 60	E

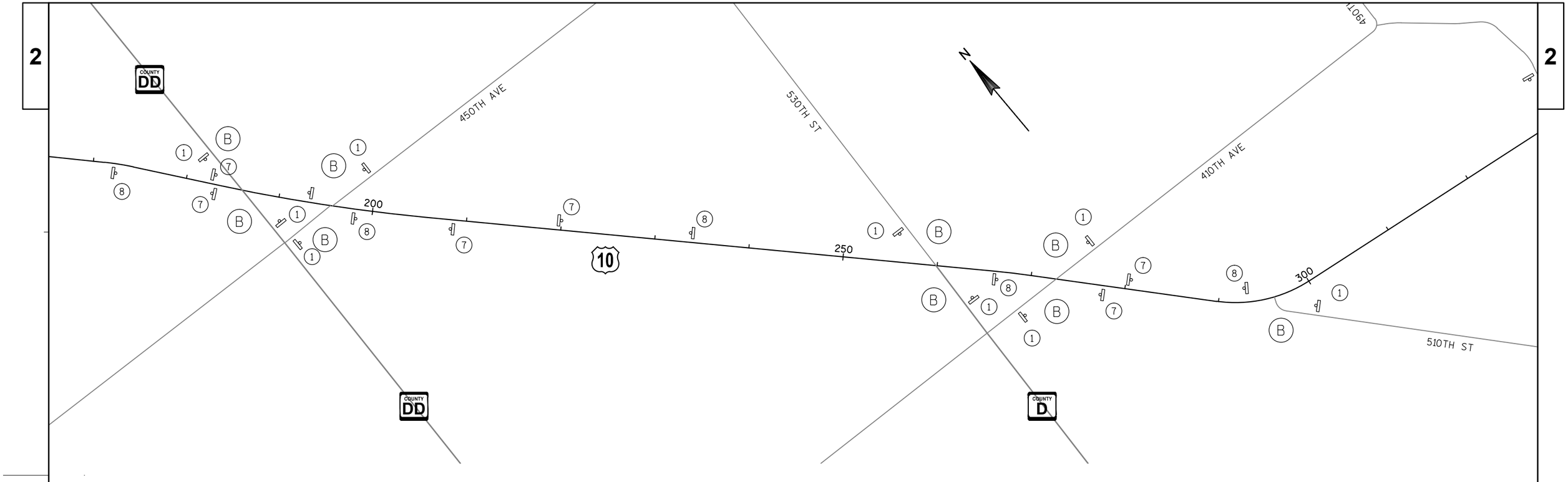

(A) SEE ADVANCE WARNING SIGNS 45 MPH OR GREATER, TWO WAY UNDIVIDED ROAD OPEN TO TRAFFIC

(B) SEE TYPICAL SIDEROAD APPROACH WARNING SIGN DETAIL

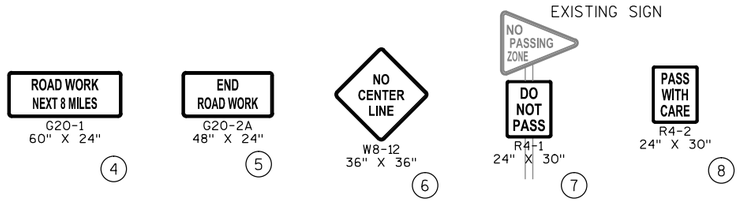

NOTES:

REFER TO SDD "TRAFFIC CONTROL, ADVANCE WARNING SIGNS 45 M.P.H. OR GREATER TWO-WAY UNDIVIDED ROAD OPEN TO TRAFFIC" FOR SIGN SPACING.

FOR TRAFFIC CONTROL SIGNING DURING MOVING OPERATIONS, SEE SDD "TRAFFIC CONTROL FOR LANE CLOSURE (SUITABLE FOR MOVING OPERATIONS)".

FOR TRAFFIC CONTROL SIGNING DURING SHOULDER WORK AT BEAMGUARD, SEE SDD "TRAFFIC CONTROL, WORK ON SHOULDER OR PARKING LANE, UNDIVIDED ROADWAY".

ALL SIGNS ARE 48" X 48" UNLESS NOTED.

LOCAL ACCESS SHALL BE MAINTAINED AT ALL TIMES.

THE EXACT NUMBER, LOCATION AND SPACING OF ALL SIGNS AND DEVICES MAY BE ADJUSTED TO FIT FIELD CONDITIONS AS DIRECTED BY THE ENGINEER.

SIGNS NUMBERED 6, 7 AND 8 SHALL BE PLACED PRIOR TO MILLING OPERATION. THESE SIGNS SHALL REMAIN UNTIL PAVEMENT MARKING IS PLACED ON THE FINAL LIFT OF MAINLINE ASPHALTIC PAVEMENT.

PROJECT NO: 1530-07-62	HWY: USH 10	COUNTY: PIERCE	PLAN: TRAFFIC CONTROL	SHEET 61	E

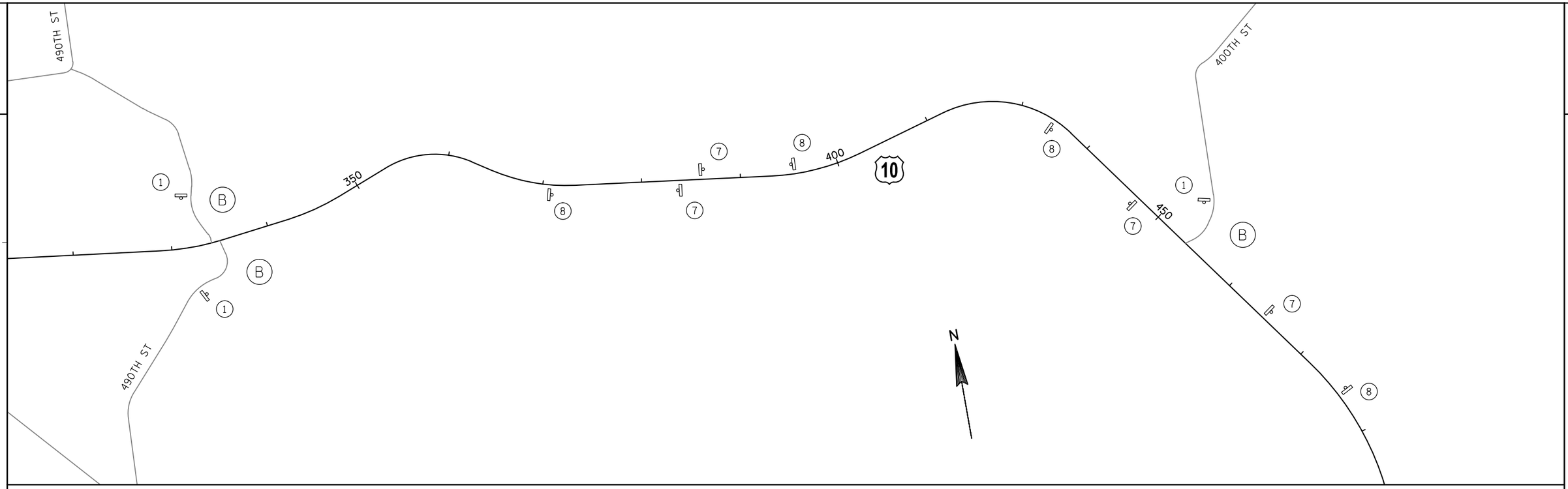

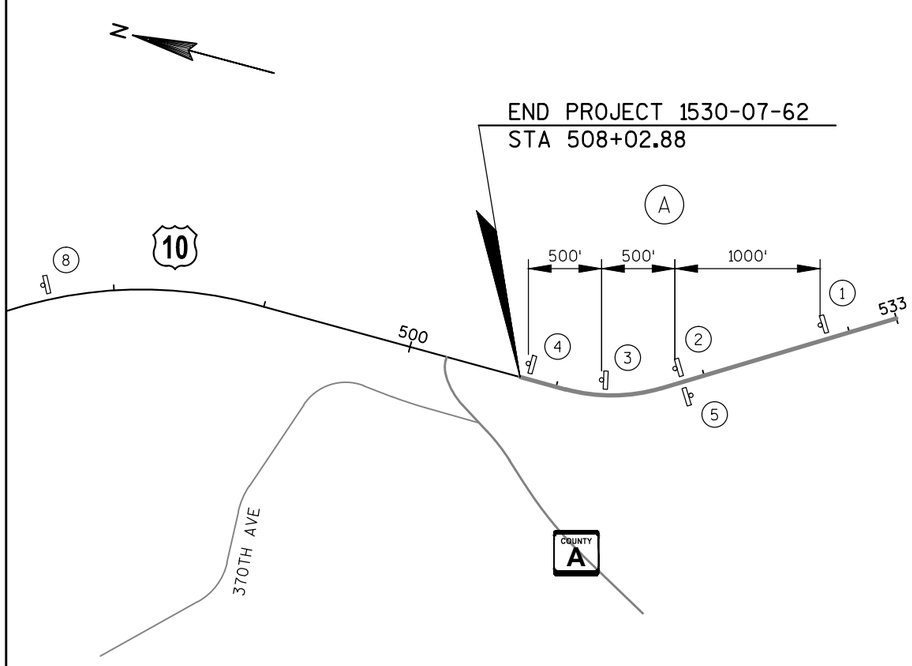

(A) SEE ADVANCE WARNING SIGNS 45 MPH OR GREATER, TWO WAY UNDIVIDED ROAD OPEN TO TRAFFIC

(B) SEE TYPICAL SIDEROAD APPROACH WARNING SIGN DETAIL

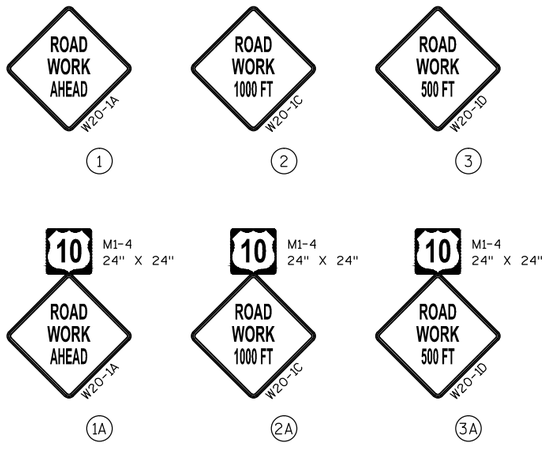

NOTES:

REFER TO SDD "TRAFFIC CONTROL, ADVANCE WARNING SIGNS 45 M.P.H. OR GREATER TWO-WAY UNDIVIDED ROAD OPEN TO TRAFFIC" FOR SIGN SPACING.

FOR TRAFFIC CONTROL SIGNING DURING MOVING OPERATIONS, SEE SDD "TRAFFIC CONTROL FOR LANE CLOSURE (SUITABLE FOR MOVING OPERATIONS)".

FOR TRAFFIC CONTROL SIGNING DURING SHOULDER WORK AT BEAMGUARD, SEE SDD "TRAFFIC CONTROL, WORK ON SHOULDER OR PARKING LANE, UNDIVIDED ROADWAY".

ALL SIGNS ARE 48" X 48" UNLESS NOTED.

LOCAL ACCESS SHALL BE MAINTAINED AT ALL TIMES.

THE EXACT NUMBER, LOCATION AND SPACING OF ALL SIGNS AND DEVICES MAY BE ADJUSTED TO FIT FIELD CONDITIONS AS DIRECTED BY THE ENGINEER.

SIGNS NUMBERED 6, 7 AND 8 SHALL BE PLACED PRIOR TO MILLING OPERATION. THESE SIGNS SHALL REMAIN UNTIL PAVEMENT MARKING IS PLACED ON THE FINAL LIFT OF MAINLINE ASPHALTIC PAVEMENT.

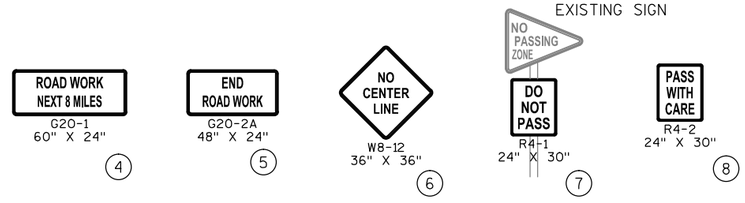

PROJECT NO: 1530-07-62	HWY: USH 10	COUNTY: PIERCE	PLAN: TRAFFIC CONTROL	SHEET 62	E

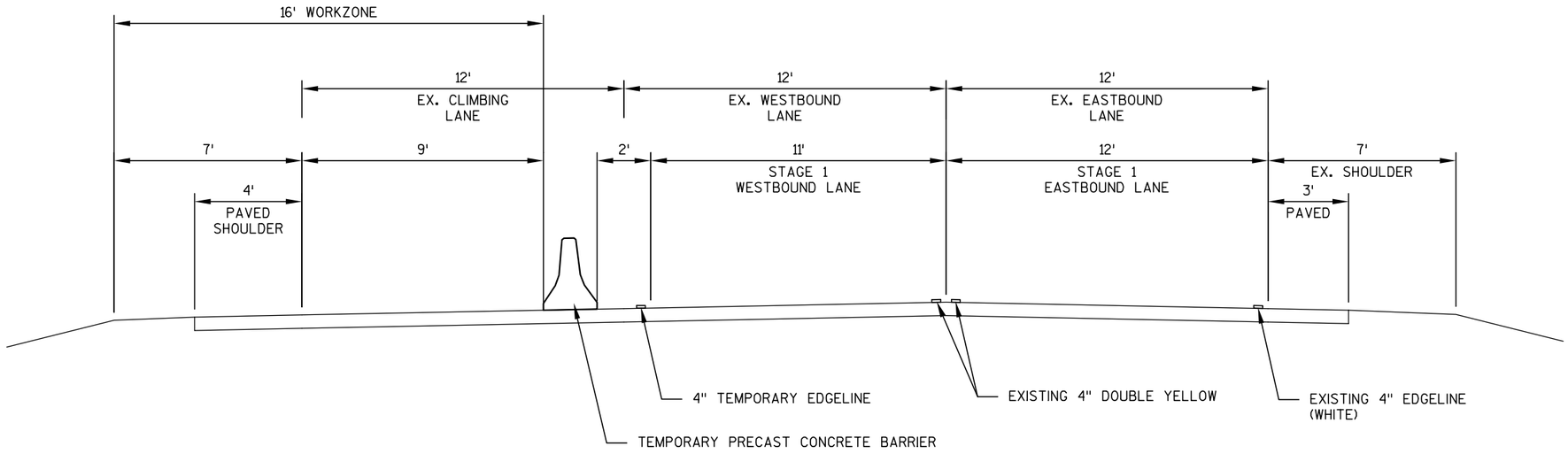

STAGE 1 - TYPICAL SECTION

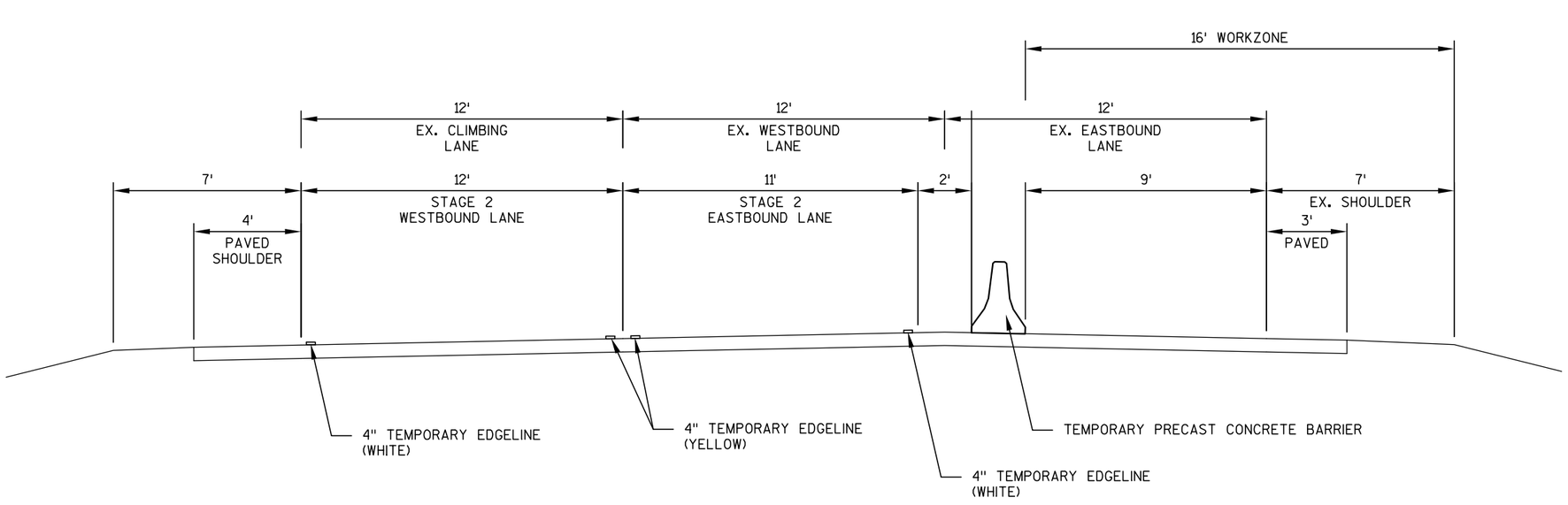

STAGE 2 - TYPICAL SECTION

PROJECT NO:1530-07-62	HWY: USH 10	COUNTY: PIERCE	STAGE 1 & 2 TYPICAL SECTIONS	SHEET 63	E

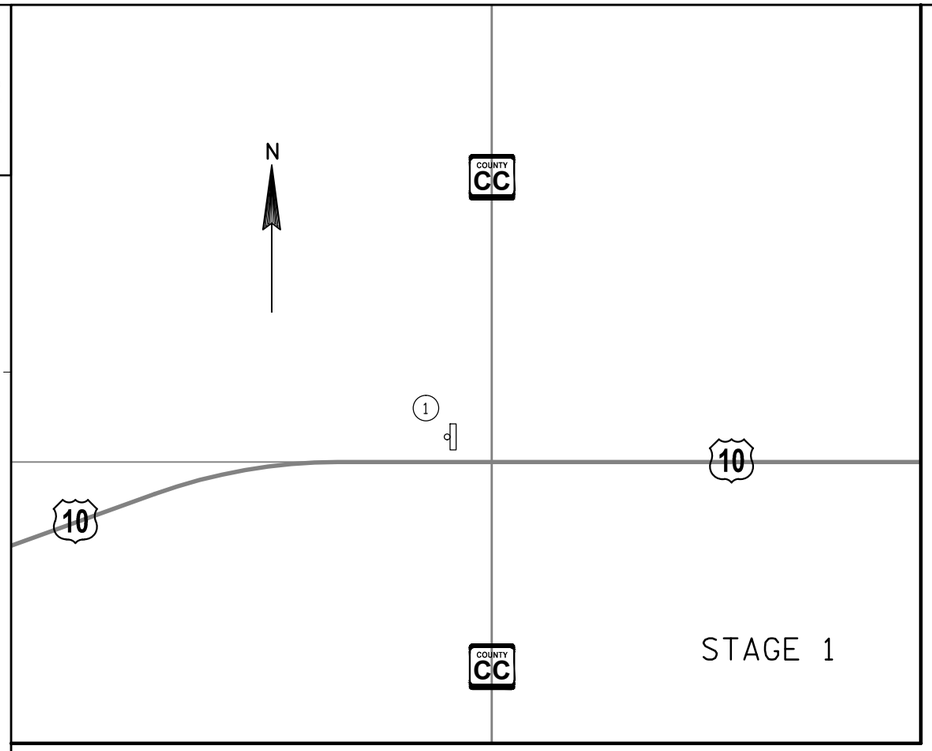

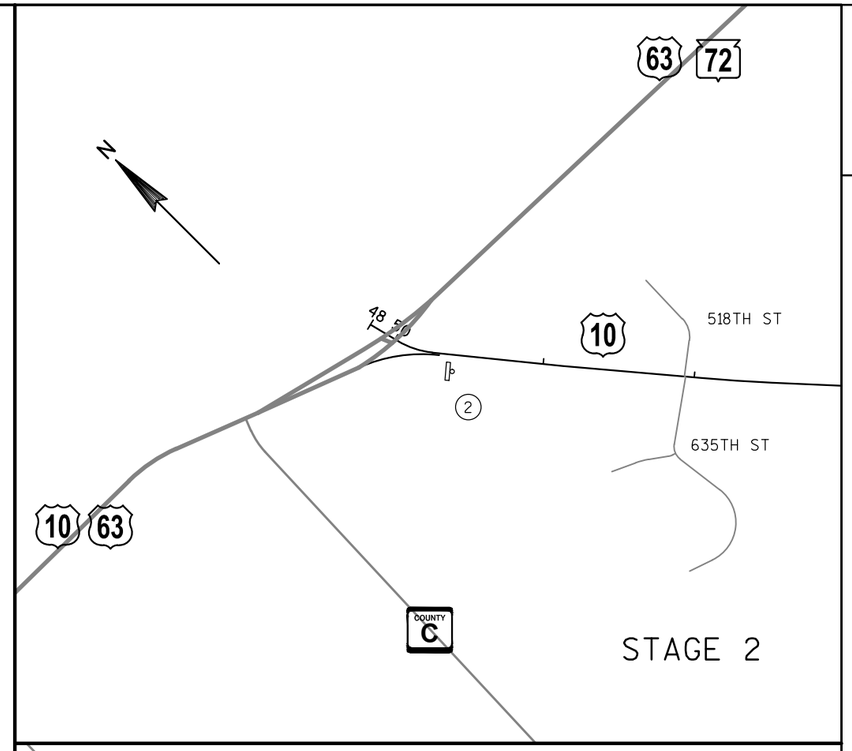

2

NOTES:

ALL SIGNS ARE 48" X 48" UNLESS NOTED.

THE EXACT NUMBER, LOCATION AND SPACING OF ALL SIGNS AND DEVICES MAY BE ADJUSTED TO FIT FIELD CONDITIONS AS DIRECTED BY THE ENGINEER.

W057-52
36" X 24" (1)

W057-52
36" X 24" (2)

W057-52
36" X 24" (3)

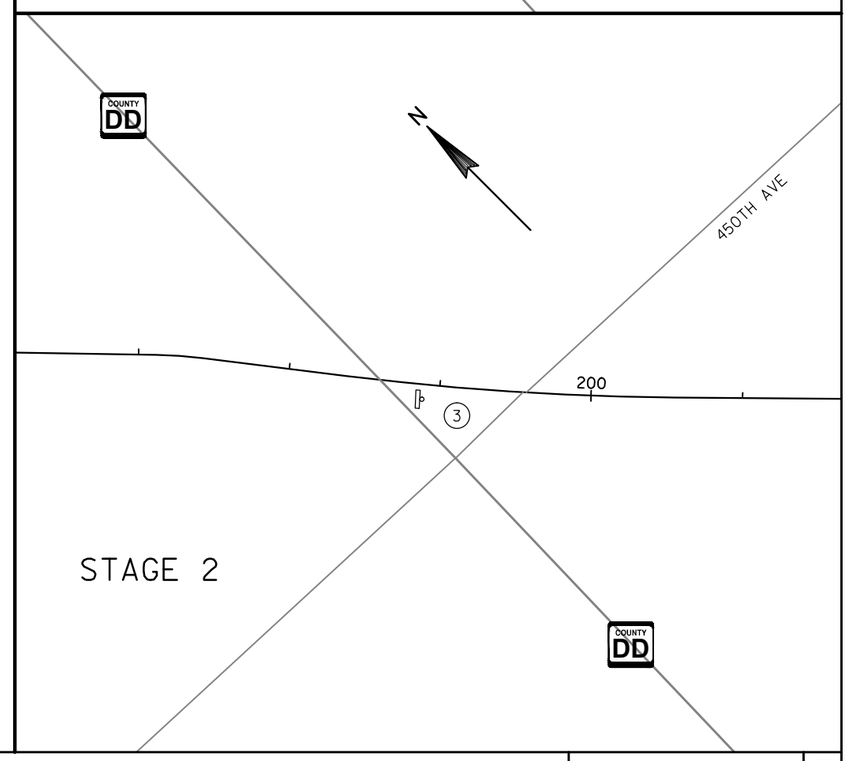

PROJECT NO: 1530-07-62	HWY: USH 10	COUNTY: PIERCE	PLAN: STAGE 1 & 2 DETAILS	SHEET 64	E

2

LEGEND

- TYPE III BARRICADE
- TYPE III BARRICADE WTH ATTACHED SIGN
- TRAFFIC CONTROL DRUM
- TRAFFIC CONTROL DRUM WITH TYPE C STEADY BURN LIGHT
- FLASHING ARROW BOARD
- SIGN ON PERMANENT SUPPORT
- SIGN ON TEMPORARY SUPPORT
- CONCRETE BARRIER TEMPORARY PRECAST
- WORK AREA
- DIRECTION OF TRAFFIC
- CRASH CUSHIONS TEMPORARY

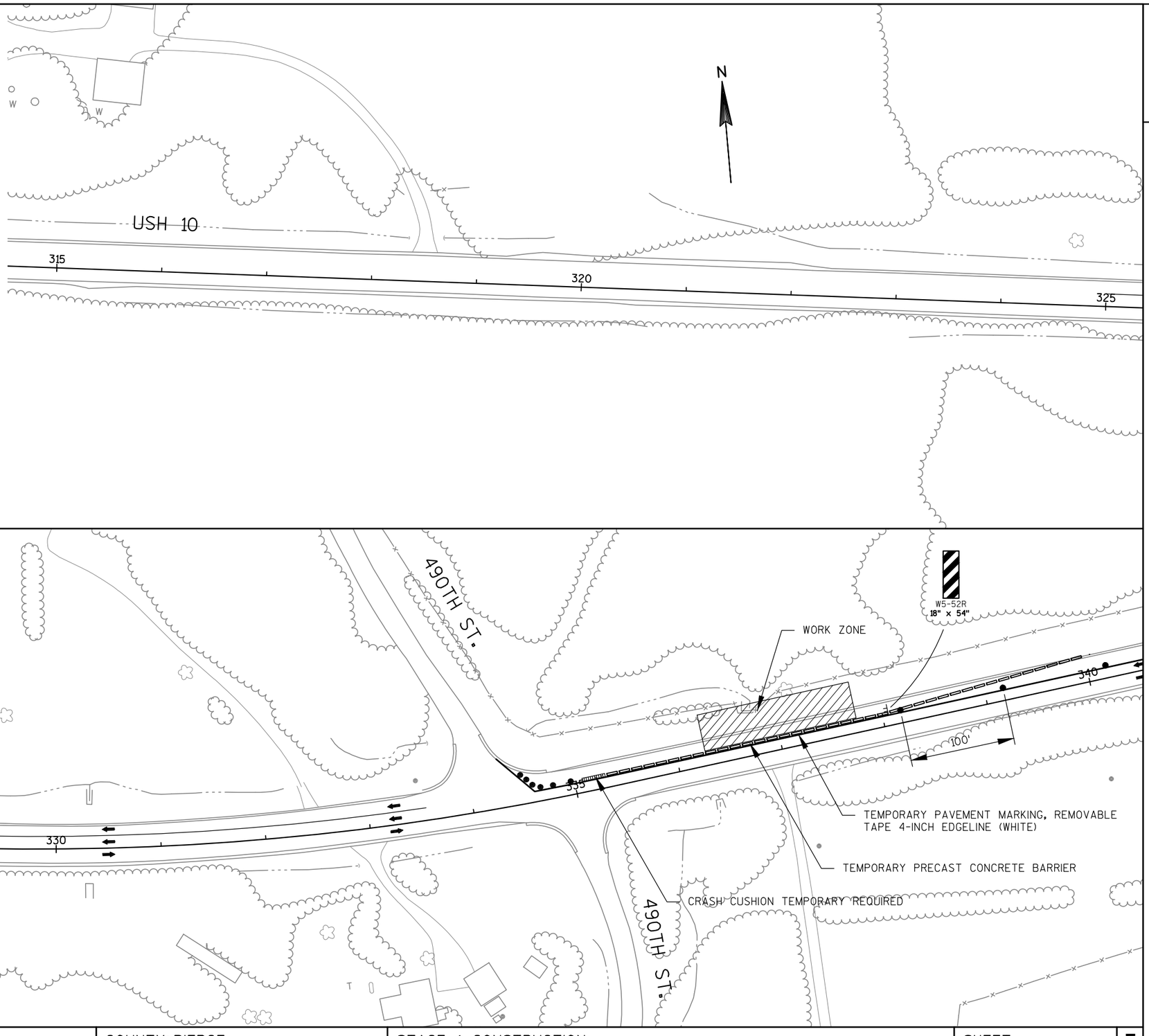

2

PROJECT NO:1530-07-62	HWY: USH 10	COUNTY: PIERCE	STAGE 1 CONSTRUCTION	SHEET 65	E

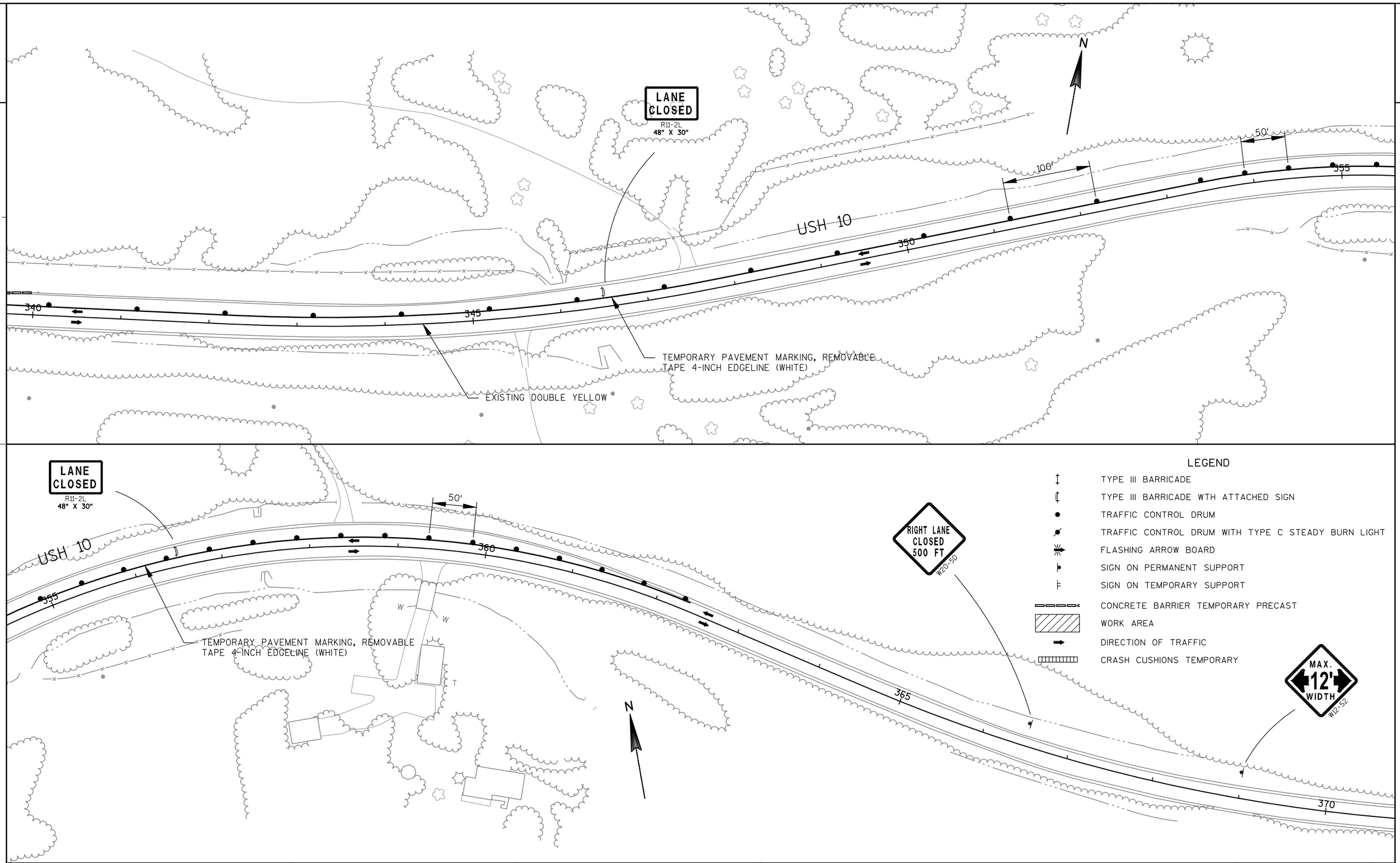

PROJECT NO:1530-07-62	HWY:USH 10	COUNTY:PIERCE	STAGE 1 CONSTRUCTION	SHEET 66	E

FILE NAME : X:\23046-80\10024\TECH\CADD\DRAWINGS\026001_S1.DWG PLOT DATE : 6/20/2013 11:00 AM PLOT BY : JEFF BREU PLOT NAME : PLOT SCALE : 1:100_XREF

WISDOT/CADDS SHEET 44

2

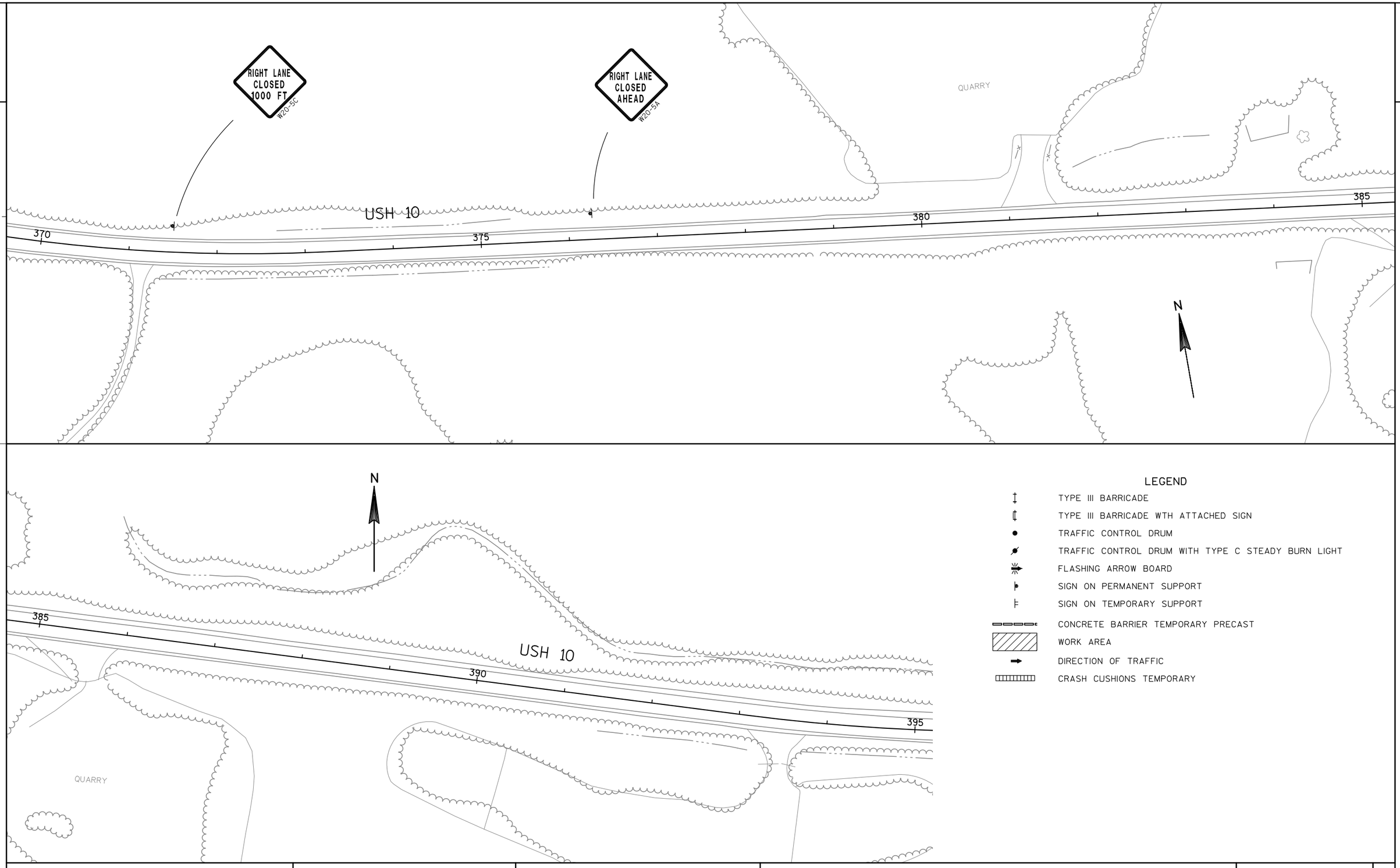

LEGEND

- TYPE III BARRICADE
- TYPE III BARRICADE WTH ATTACHED SIGN
- TRAFFIC CONTROL DRUM
- TRAFFIC CONTROL DRUM WITH TYPE C STEADY BURN LIGHT
- FLASHING ARROW BOARD
- SIGN ON PERMANENT SUPPORT
- SIGN ON TEMPORARY SUPPORT
- CONCRETE BARRIER TEMPORARY PRECAST
- WORK AREA
- DIRECTION OF TRAFFIC
- CRASH CUSHIONS TEMPORARY

PROJECT NO: 1530-07-62	HWY: USH 10	COUNTY: PIERCE	STAGE 1 CONSTRUCTION	SHEET 67	E

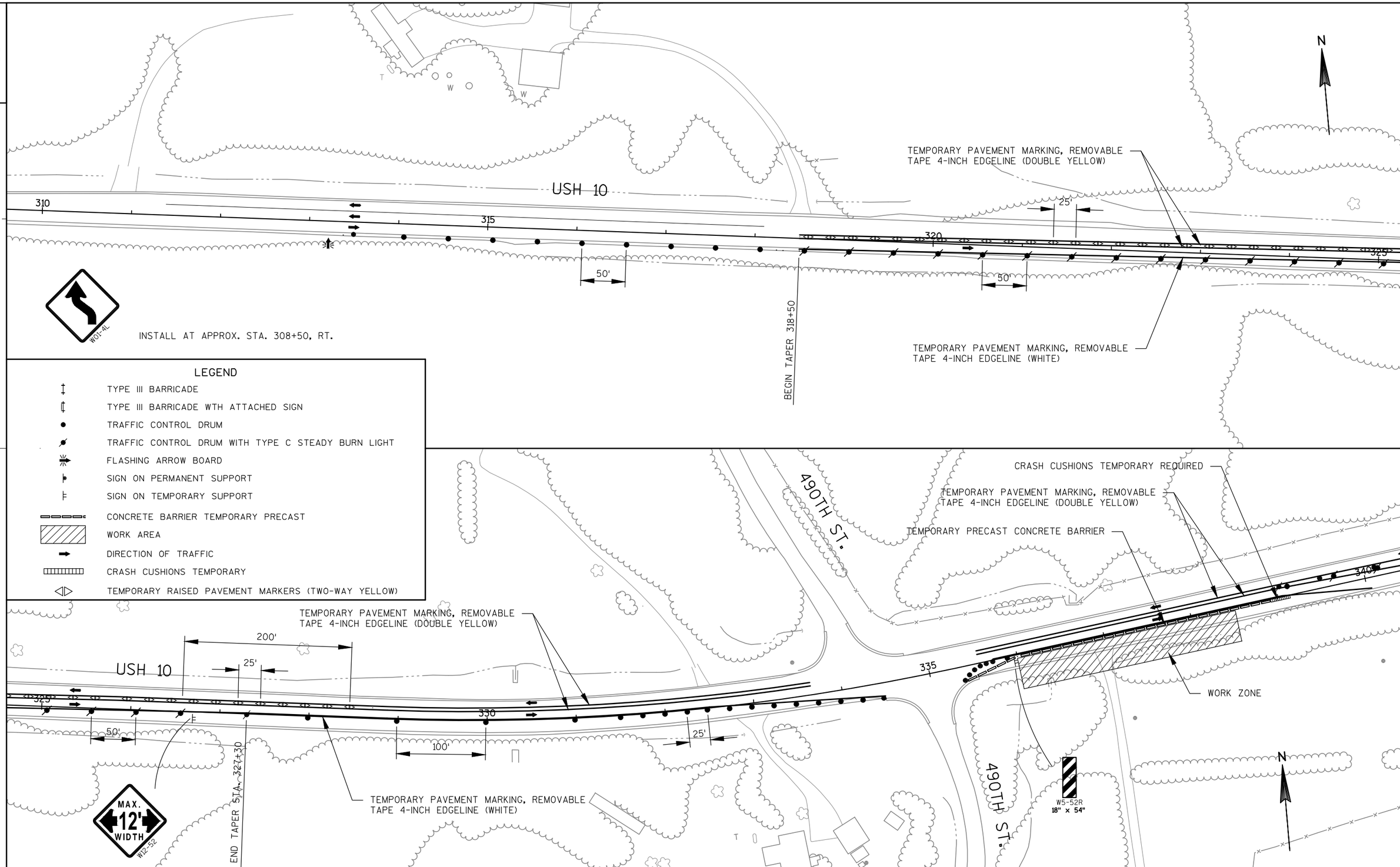

PROJECT NO:1530-07-62	HWY:USH 10	COUNTY:PIERCE	STAGE 2 CONSTRUCTION	SHEET 68	E

FILE NAME : X:\23046-80\10024\TECH\CADD\DRAWINGS\026101_S2.DWG PLOT DATE : 6/20/2013 11:02 AM PLOT BY : JEFF BREU PLOT NAME : PLOT SCALE : 1:100_XREF

WISDOT/CADDS SHEET 44

2

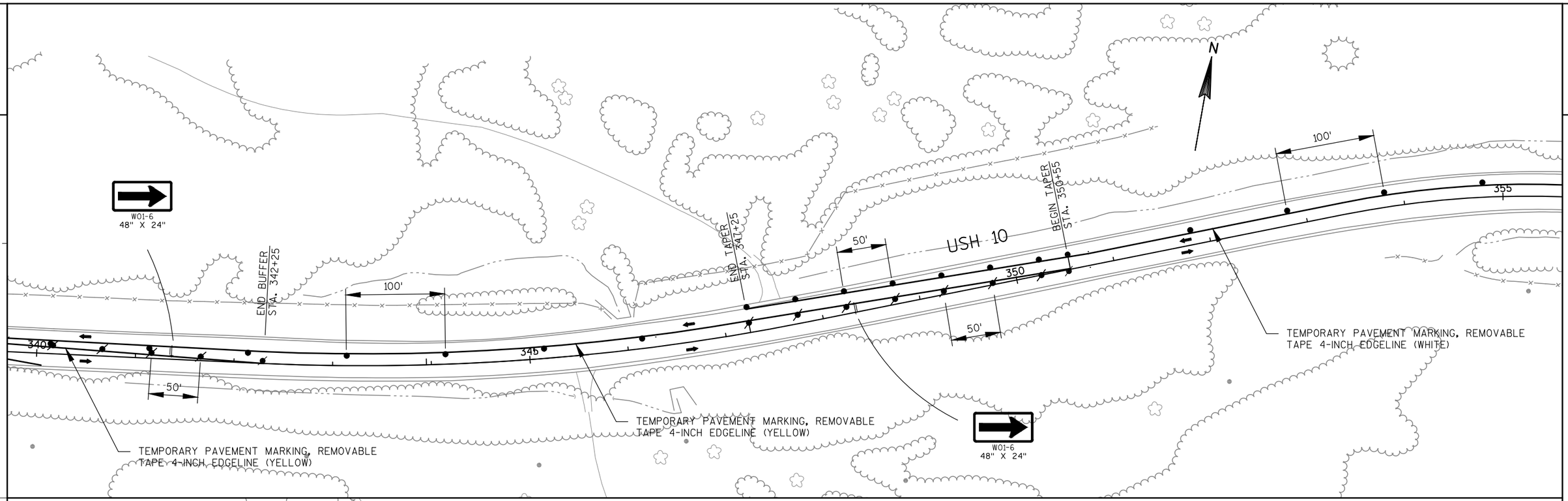

PROJECT NO: 1530-07-62	HWY: USH 10	COUNTY: PIERCE	STAGE 2 CONSTRUCTION	SHEET 69	E

2

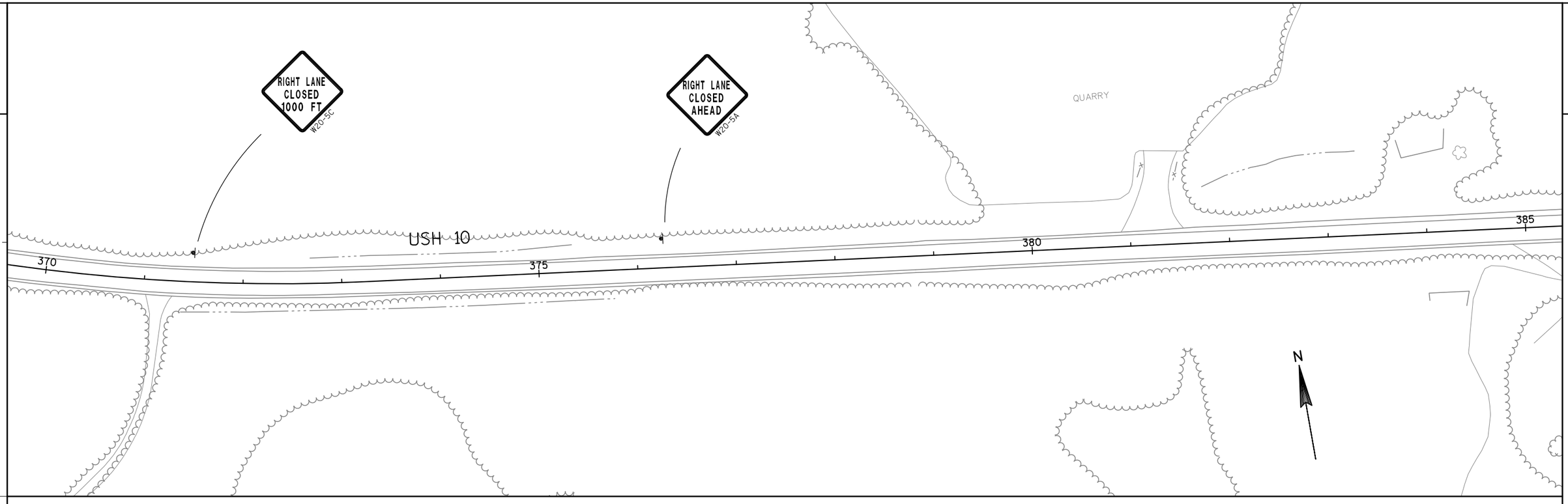

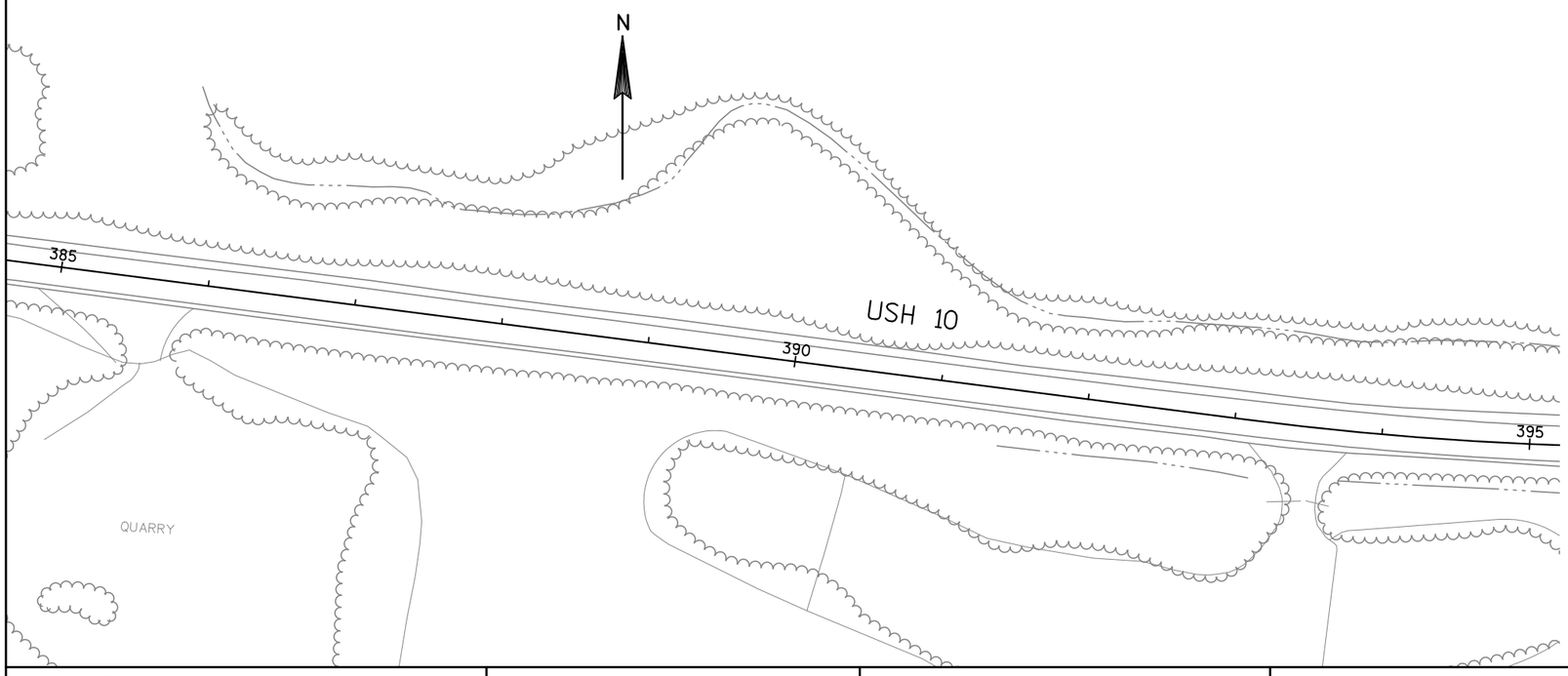

LEGEND

- TYPE III BARRICADE
- TYPE III BARRICADE WTH ATTACHED SIGN
- TRAFFIC CONTROL DRUM
- TRAFFIC CONTROL DRUM WITH TYPE C STEADY BURN LIGHT
- FLASHING ARROW BOARD
- SIGN ON PERMANENT SUPPORT
- SIGN ON TEMPORARY SUPPORT
- CONCRETE BARRIER TEMPORARY PRECAST
- WORK AREA
- DIRECTION OF TRAFFIC
- CRASH CUSHIONS TEMPORARY
- TEMPORARY RAISED PAVEMENT MARKERS (TWO-WAY YELLOW)

PROJECT NO: 1530-07-62	HWY: USH 10	COUNTY: PIERCE	STAGE 2 CONSTRUCTION	SHEET 70	E

FILE NAME : X:\23046-80\10024\TECH\CADD\DRAWINGS\026101_S2.DWG PLOT DATE : 6/20/2013 11:04 AM PLOT BY : JEFF BREU PLOT NAME : ---------- PLOT SCALE : 1:100_XREF

DATE 25JUN13 E S T I M A T E O F Q U A N T I T I E S

LINE NUMBER	ITEM	ITEM DESCRIPTION	UNIT	TOTAL	1530-07-62 QUANTITY
0010	203.0100	REMOVING SMALL PIPE CULVERTS	EACH	1.000	1.000
0020	203.0200	REMOVING OLD STRUCTURE (STATION) 01. 336+45	LS	1.000	1.000
0030	204.0100	REMOVING PAVEMENT	SY	300.000	300.000
0040	204.0115	REMOVING ASPHALTIC SURFACE BUTT JOINTS	SY	2,592.000	2,592.000
0050	204.0120	REMOVING ASPHALTIC SURFACE MILLING	SY	151,657.000	151,657.000
0060	204.0150	REMOVING CURB & GUTTER	LF	1,539.000	1,539.000
0070	204.9060.S	REMOVING (ITEM DESCRIPTION) 01. APRON ENDWALLS	EACH	22.000	22.000
0080	206.2000	EXCAVATION FOR STRUCTURES CULVERTS (STRUCTURE) 01. C-47-234	LS	1.000	1.000
0090	206.6000.S	TEMPORARY SHORING	SF	3,440.000	3,440.000
0100	209.0100	BACKFILL GRANULAR	CY	150.000	150.000
0110	210.0100	BACKFILL STRUCTURE	CY	1,150.000	1,150.000
0120	213.0100	FINISHING ROADWAY (PROJECT) 01. 1530-07-62	EACH	1.000	1.000
0130	305.0110	BASE AGGREGATE DENSE 3/4-INCH	TON	4,227.000	4,227.000
0140	305.0120	BASE AGGREGATE DENSE 1 1/4-INCH	TON	460.000	460.000
0150	305.0500	SHAPING SHOULDERS	STA	892.000	892.000
0160	310.0110	BASE AGGREGATE OPEN GRADED	TON	2,625.000	2,625.000
0170	315.0200	ASPHALTIC BASE WIDENING	TON	2,750.000	2,750.000
0180	440.4410.S	INCENTIVE IRI RIDE	DOL	33,780.000	33,780.000
0190	455.0605	TACK COAT	GAL	4,210.000	4,210.000
0200	460.2000	INCENTIVE DENSITY HMA PAVEMENT	DOL	7,240.000	7,240.000
0210	465.0105	ASPHALTIC SURFACE	TON	3,250.000	3,250.000
0220	465.0110	ASPHALTIC SURFACE PATCHING	TON	50.000	50.000
0230	465.0120	ASPHALTIC SURFACE DRIVEWAYS AND FIELD ENTRANCES	TON	16.000	16.000
0240	465.0315	ASPHALTIC FLUMES	SY	27.000	27.000
0250	465.0425.S	ASPHALT SHOULDER RUMBLE STRIP 2-LANE RURAL	LF	86,000.000	86,000.000
0260	465.0450	ASPHALTIC INTERSECTION RUMBLE STRIP	SY	90.000	90.000
0270	465.0475.S	ASPHALT CENTER LINE RUMBLE STRIP 2-LANE RURAL	LF	40,200.000	40,200.000
0280	490.0205	SALVAGED ASPHALTIC PAVEMENT MILLING	TON	2,071.000	2,071.000
0290	502.5005	MASONRY ANCHORS TYPE L NO. 5 BARS	EACH	72.000	72.000
0300	504.0100	CONCRETE MASONRY CULVERTS	CY	102.000	102.000
0310	505.0410	BAR STEEL REINFORCEMENT HS CULVERTS	LB	10,140.000	10,140.000
0320	516.0500	RUBBERIZED MEMBRANE WATERPROOFING	SY	32.000	32.000
0330	520.7000	CLEANING CULVERT PIPES	EACH	18.000	18.000
0340	521.0124	CULVERT PIPE CORRUGATED STEEL 24-INCH	LF	37.000	37.000
0350	521.1524	APRON ENDWALLS FOR CULVERT PIPE SLOPED SIDE DRAINS STEEL 24-INCH 6 TO 1	EACH	1.000	1.000
0360	522.1024	APRON ENDWALLS FOR CULVERT PIPE REINFORCED CONCRETE 24-INCH	EACH	7.000	7.000
0370	522.1030	APRON ENDWALLS FOR CULVERT PIPE REINFORCED CONCRETE 30-INCH	EACH	9.000	9.000
0380	522.1036	APRON ENDWALLS FOR CULVERT PIPE REINFORCED CONCRETE 36-INCH	EACH	4.000	4.000
0390	523.0119	CULVERT PIPE REINFORCED CONCRETE HORIZONTAL ELLIPTICAL CLASS HE-III 19X30-INCH	LF	136.000	136.000
0400	523.0519	APRON ENDWALLS FOR CULVERT PIPE REINFORCED CONCRETE HORIZONTAL ELLIPTICAL 19X30-INCH	EACH	4.000	4.000
0410	524.0130	CULVERT PIPE SALVAGED 30-INCH	LF	16.000	16.000

3

DATE 25JUN13 E S T I M A T E O F Q U A N T I T I E S

LINE NUMBER	ITEM	ITEM DESCRIPTION	UNIT	TOTAL	1530-07-62 QUANTITY
0420	601.0553	CONCRETE CURB AND GUTTER 4-INCH SLOPED 36-INCH TYPE D	LF	252.000	252.000
0430	601.0557	CONCRETE CURB AND GUTTER 6-INCH SLOPED 36-INCH TYPE D	LF	1,562.000	1,562.000
0440	603.8000	CONCRETE BARRIER TEMPORARY PRECAST DELIVERED	LF	475.000	475.000
0450	603.8125	CONCRETE BARRIER TEMPORARY PRECAST INSTALLED	LF	950.000	950.000
0460	606.0100	RIPRAP LIGHT	CY	2.000	2.000
0470	606.0200	RIPRAP MEDIUM	CY	38.000	38.000
0480	606.0300	RIPRAP HEAVY	CY	80.000	80.000
0490	611.0642	INLET COVERS TYPE MS	EACH	2.000	2.000
0500	611.3902	INLETS MEDIAN 2 GRATE	EACH	1.000	1.000
0510	612.0406	PIPE UNDERDRAIN WRAPPED 6-INCH	LF	125.000	125.000
0520	614.0010	BARRIER SYSTEM GRADING SHAPING FINISHING	EACH	33.000	33.000
0530	614.0115	ANCHORAGES FOR STEEL PLATE BEAM GUARD TYPE 2	EACH	1.000	1.000
0540	614.0305	STEEL PLATE BEAM GUARD CLASS A	LF	2,515.000	2,515.000
0550	614.0340	STEEL PLATE BEAM GUARD OVER LOW-FILL CULVERTS CLASS A	LF	100.000	100.000
0560	614.0345	STEEL PLATE BEAM GUARD SHORT RADIUS	LF	116.000	116.000
0570	614.0370	STEEL PLATE BEAM GUARD ENERGY ABSORBING TERMINAL	EACH	20.000	20.000
0580	614.0390	STEEL PLATE BEAM GUARD SHORT RADIUS TERMINAL	EACH	7.000	7.000
0590	614.0400	ADJUSTING STEEL PLATE BEAM GUARD	LF	6,446.000	6,446.000
0600	614.0905	CRASH CUSHIONS TEMPORARY	EACH	4.000	4.000
0610	614.0920	SALVAGED RAIL	LF	2,285.000	2,285.000
0620	614.2300	MGS GUARDRAIL 3	LF	187.500	187.500
0630	614.2340	MGS GUARDRAIL 3 L	LF	225.000	225.000
0640	614.2610	MGS GUARDRAIL TERMINAL EAT	EACH	10.000	10.000
0650	618.0100	MAINTENANCE AND REPAIR OF HAUL ROADS (PROJECT) 01. 1530-07-62	EACH	1.000	1.000
0660	619.1000	MOBILIZATION	EACH	1.000	1.000
0670	625.0100	TOPSOIL	SY	2,537.000	2,537.000
0680	628.1504	SILT FENCE	LF	2,445.000	2,445.000
0690	628.1520	SILT FENCE MAINTENANCE	LF	4,890.000	4,890.000
0700	628.1905	MOBILIZATIONS EROSION CONTROL	EACH	6.000	6.000
0710	628.1910	MOBILIZATIONS EMERGENCY EROSION CONTROL	EACH	4.000	4.000
0720	628.2006	EROSION MAT URBAN CLASS I TYPE A	SY	6,955.000	6,955.000
0730	628.7504	TEMPORARY DITCH CHECKS	LF	285.000	285.000
0740	628.7555	CULVERT PIPE CHECKS	EACH	105.000	105.000
0750	629.0210	FERTILIZER TYPE B	CWT	2.000	2.000
0760	630.0120	SEEDING MIXTURE NO. 20	LB	68.000	68.000
0770	633.5200	MARKERS CULVERT END	EACH	22.000	22.000
0780	634.0614	POSTS WOOD 4X6-INCH X 14-FT	EACH	81.000	81.000
0790	634.0616	POSTS WOOD 4X6-INCH X 16-FT	EACH	14.000	14.000
0800	634.0618	POSTS WOOD 4X6-INCH X 18-FT	EACH	1.000	1.000
0810	637.0202	SIGNS REFLECTIVE TYPE II	SF	684.090	684.090
0820	638.2602	REMOVING SIGNS TYPE II	EACH	142.000	142.000
0830	638.3000	REMOVING SMALL SIGN SUPPORTS	EACH	93.000	93.000
0840	642.5001	FIELD OFFICE TYPE B	EACH	1.000	1.000
0850	643.0100	TRAFFIC CONTROL (PROJECT) 01. 1530-07-62	EACH	1.000	1.000
0860	643.0300	TRAFFIC CONTROL DRUMS	DAY	13,119.000	13,119.000
0870	643.0420	TRAFFIC CONTROL BARRICADES TYPE III	DAY	1,468.000	1,468.000

3

DATE 25JUN13 E S T I M A T E O F Q U A N T I T I E S

LINE NUMBER	ITEM	ITEM DESCRIPTION	UNIT	TOTAL	1530-07-62 QUANTITY
0880	643.0705	TRAFFIC CONTROL WARNING LIGHTS TYPE A	DAY	1,672.000	1,672.000
0890	643.0715	TRAFFIC CONTROL WARNING LIGHTS TYPE C	DAY	1,592.000	1,592.000
0900	643.0800	TRAFFIC CONTROL ARROW BOARDS	DAY	33.000	33.000
0910	643.0900	TRAFFIC CONTROL SIGNS	DAY	7,932.000	7,932.000
0920	643.1050	TRAFFIC CONTROL SIGNS PCMS	DAY	14.000	14.000
0930	645.0120	GEOTEXTILE FABRIC TYPE HR	SY	187.000	187.000
0940	645.0130	GEOTEXTILE FABRIC TYPE R	SY	24.000	24.000
0950	646.0106	PAVEMENT MARKING EPOXY 4-INCH	LF	86,357.000	86,357.000
0960	646.0116	PAVEMENT MARKING EPOXY 6-INCH	LF	1,820.000	1,820.000
0970	646.0126	PAVEMENT MARKING EPOXY 8-INCH	LF	867.000	867.000
0980	646.0406	PAVEMENT MARKING SAME DAY EPOXY 4-INCH	LF	68,000.000	68,000.000
0990	647.0566	PAVEMENT MARKING STOP LINE EPOXY 18-INCH	LF	36.000	36.000
1000	648.0100	LOCATING NO-PASSING ZONES	MI	7.250	7.250
1010	649.0100	TEMPORARY PAVEMENT MARKING 4-INCH	LF	136,000.000	136,000.000
1020	649.0400	TEMPORARY PAVEMENT MARKING REMOVABLE TAPE 4-INCH	LF	11,600.000	11,600.000
1030	649.2100	TEMPORARY RAISED PAVEMENT MARKERS	EACH	40.000	40.000
1040	650.5500	CONSTRUCTION STAKING CURB GUTTER AND CURB & GUTTER	LF	1,527.000	1,527.000
1050	650.6000	CONSTRUCTION STAKING PIPE CULVERTS	EACH	1.000	1.000
1060	650.6500	CONSTRUCTION STAKING STRUCTURE LAYOUT (STRUCTURE) 01. C-47-234	LS	1.000	1.000
1070	650.8000	CONSTRUCTION STAKING RESURFACING REFERENCE	LF	44,600.000	44,600.000
1080	650.9910	CONSTRUCTION STAKING SUPPLEMENTAL CONTROL (PROJECT) 01. 1530-07-62	LS	1.000	1.000
1090	690.0150	SAWING ASPHALT	LF	7,982.000	7,982.000
1100	690.0250	SAWING CONCRETE	LF	46.000	46.000
1110	715.0502	INCENTIVE STRENGTH CONCRETE STRUCTURES	DOL	612.000	612.000
1120	ASP.1T0A	ON-THE-JOB TRAINING APPRENTICE AT $5. 00/HR	HRS	1,000.000	1,000.000
1130	ASP.1T0G	ON-THE-JOB TRAINING GRADUATE AT $5.00/HR	HRS	315.000	315.000
1140	SPV.0090	SPECIAL 01. CONCRETE CURB AND GUTTER CURE AND SEAL TREATMENT	LF	1,814.000	1,814.000
1150	SPV.0105	SPECIAL 01. PREPARATION OF FOUNDATION FOR ASPHALTIC PAVING SPECIAL	LS	1.000	1.000
1160	SPV.0105	SPECIAL 02. MATERIAL TRANSFER VEHICLE	LS	1.000	1.000
1170	SPV.0105	SPECIAL 03. MILLING AND REMOVING TEMPORARY JOINT	LS	1.000	1.000
1180	SPV.0165	SPECIAL 01. TEMPORARY SHORING LEFT IN PLACE	SF	170.000	170.000
1190	SPV.0170	SPECIAL 01. REHEATING HMA PAVEMENT LONGITUDINAL JOINTS SPECIAL	STA	968.000	968.000
1200	SPV.0195	SPECIAL 01. HMA PAVEMENT TYPE E-3 SPECIAL	TON	15,786.000	15,786.000
1210	SPV.0195	SPECIAL 02. HMA PAVEMENT TYPE E-10 SPECIAL	TON	18,138.000	18,138.000

3

REMOVING SMALL CULVERT PIPES

LOCATION	STATION	203.0100 REMOVING SMALL CULVERT PIPES (EACH)	REMARKS
USH 10	141+40	1	30-INCH
	TOTAL:	1	

REMOVING PAVEMENT

LOCATION	STATION		STATION	OFFSET	204.0100 REMOVING PAVEMENT (SY)	REMARKS
USH 10	55+07	-	55+32	LT	33	RUMBLE STRIP
	57+85	-	58+10	LT	34	RUMBLE STRIP
	60+50	-	60+75	LT	33	RUMBLE STRIP
	140+95	-	141+85	RT/LT	200	PIPE REPLACEMENT
TOTAL:					300	

REMOVING APRON ENDWALLS

LOCATION	STATION	OFFSET	204.9060.S.01 REMOVING APRON ENDWALLS (EACH)
USH 10	97+88	RT/LT	2
	141+40	RT/LT	2
	151+56	RT/LT	2
	183+08	RT/LT	2
	203+15	RT/LT	2
	274+07	RT/LT	2
	294+50	RT/LT	2
	311+70	RT/LT	2
	342+37	RT	1
	446+20	RT/LT	2
	459+55	LT	1
	482+16	RT/LT	2
	TOTAL:		22

REMOVAL QUANTITIES

LOCATION	STATION	-	STATION	OFFSET	204.0115 REMOVING ASPHALTIC SURFACE BUTT JOINTS (SY)	204.0120 REMOVING ASPHALTIC SURFACE MILLING (SY)	** 490.0205 SALVAGED ASPHALTIC PAVEMENT MILLING (TON)	204.0150 REMOVING CURB AND GUTTER	REMARKS
USH 10	49+95	-	50+45	CL	574	--	--	--	BEGIN CONSTRUCTION 50'
	50+45		187+00	CL	--	45,909	1,276	--	MAINLINE
	113+02	-	114+08	RT	--	--	--	6	CURB & GUTTER EXTENSION
	118+02	-	118+63	RT	--	--	--	6	CURB & GUTTER EXTENSION
	209+00	-	252+00	CL	--	8,943	795	--	MAINLINE
	252+00	-	270+00	CL	--	6,000		--	MAINLINE
	270+00	-	294+80	CL	--	8,267	--	--	MAINLINE
	294+80	-	305+00	CL	--	3,400	--	--	MAINLINE
	305+00		508+03	CL	--	68,634	--	--	MAINLINE
	304+92	-	309+25	LT	--	192	--	--	WIDENING FOR GUARDRAIL
	305+47	-	316+18	RT	--	474	--	--	WIDENING FOR GUARDRAIL
	318+59	-	322+75	LT	--	144	--	--	WIDENING FOR GUARDRAIL
	319+22	-	324+20	RT	--	219	--	--	WIDENING FOR GUARDRAIL
	326+61	-	332+93	RT	--	279	--	--	WIDENING FOR GUARDRAIL
	334+75	-	338+88	LT	--	183	--		WIDENING FOR GUARDRAIL
	335+53	-	337+42	RT	--	69	--		WIDENING FOR GUARDRAIL
	340+88	-	343+82	RT	--	128	--	--	WIDENING FOR GUARDRAIL
	344+14	-	347+59	LT	--	121	--	--	WIDENING FOR GUARDRAIL
	352+91	-	371+55	RT	--	859	--	--	WIDENING FOR GUARDRAIL
	367+57	-	373+08	LT	--	244	--	--	WIDENING FOR GUARDRAIL
	374+43	-	380+16	LT	--	252	--	--	WIDENING FOR GUARDRAIL
	374+73	-	380+08	RT	--	236	--	--	WIDENING FOR GUARDRAIL
	381+02	-	414+15	LT	--	1,452	--	--	WIDENING FOR GUARDRAIL
	381+21	-	385+94	RT	--	196	--	--	WIDENING FOR GUARDRAIL
	394+57	-	398+49	RT	--	170	--	--	WIDENING FOR GUARDRAIL
	452+18	-	455+50	RT	--	146	--	--	WIDENING FOR GUARDRAIL
	507+53	-	508+03	CL	223	--	--	--	END CONSTRUCTION 50'
518TH ST	10+15"B"	-	10+87"B"	PL	104	700	--	165	INCLUDES RT TURN LANE
635TH ST	9+85"A"	-	9+42"A"	PL	102	139	--	117	30' BUTT JOINT
610TH ST	10+20"C"	-	10+79"C"	PL	74	188	--	83	30' BUTT JOINT
	9+80"C"	-	9+34"C"	PL	110	132	--	78	30' BUTT JOINT
490TH AVE	10+19"D"	-	10+67"D"	PL	89	108	--	76	30' BUTT JOINT
	9+82"D"	-	9+31"D"	PL	82	128	--	72	30' BUTT JOINT
CTH DD	10+23"E"	-	11+07"E"	PL	76	395	--	111	30' BUTT JOINT
	9+77"E"	-	8+91"E"	PL	102	399	--	107	30' BUTT JOINT
450TH AVE	9+80"F"	-	8+93"F"	PL	82	417	--	--	30' BUTT JOINT
	10+21"G"	-	10+95"G"	PL	85	270	--	--	30' BUTT JOINT
CTH D	9+80"H"	-	8+89"H"	PL	93	474	--	--	30' BUTT JOINT
530TH ST	10+20"H"	-	10+76"H"	PL	100	198	--	--	30' BUTT JOINT
410TH AVE	9+79"I"	-	9+15"I"	PL	88	214	--	99	30' BUTT JOINT
			SUBTOTAL		1984	150,279	2,071	920	

** SALVAGED ASPHALTIC PAVEMENT MILLING TO BE USED FOR THE BASE WIDENING REPAIR AREAS.
SEE "WIDENING REPAIR ITEMS" TABLE FOR LOCATIONS

CONTINUED ON NEXT PAGE

ALL ITEMS ARE CATEGORY 0010 UNLESS OTHERWISE SPECIFIED.

REMOVAL QUANTITIES CONTINUED

LOCATION	STATION	-	STATION	OFFSET	204.0115 REMOVING ASPHALTIC SURFACE BUTT JOINTS (SY)	204.0120 REMOVING ASPHALTIC SURFACE MILLING (SY)	** 490.0205 SALVAGED ASPHALTIC PAVEMENT MILLING (TON)	204.0150 REMOVING CURB AND GUTTER	REMARKS
410TH AVE	10+21"I"	-	10+81"I"	PL	84	199	--	94	30' BUTT JOINT
510TH ST	9+85"J"	-	9+25"J"	PL	100	248	--	--	30' BUTT JOINT
490TH ST	10+24"K"	-	10+70"K"	PL	110	159	--	144	30' BUTT JOINT
	9+85"L"	-	9+37"L"	PL	100	142	--	128	30' BUTT JOINT
	10+16"M"	-	10+75"M"	PL	89	95	--	99	30' BUTT JOINT
CTH A	9+85"N"	-	9+30"N"	PL	125	535	--	154	30' BUTT JOINT
			TOTAL		2592	151,657	2,071	1539	

** SALVAGED ASPHALTIC PAVEMENT MILLING TO BE USED FOR THE BASE WIDENING REPAIR AREAS.
SEE "WIDENING REPAIR ITEMS" TABLE FOR LOCATIONS

PREPARING FOUNDATION ITEM

PROJECT	SPV.0105.01 PREPARING FOUNDATION FOR ASPHALTIC PAVING SPECIAL (LS)
1530-07-62	1
TOTAL	1

FINISHING ROADWAY (PROJECT)

PROJECT	213.0100 FINISHING ROADWAY (PROJECT)
1530-07-62	1
TOTAL	1

BASE AGGREGATE ITEMS

LOCATION	STATION	-	STATION	OFFSET	209.0100 BACKFILL GRANULAR (CY)	305.0110 * BASE AGGREGATE DENSE 3/4 - INCH (TON)	305.0120 BASE AGGREGATE DENSE 1 1/4 - INCH (TON)	305.0500 SHAPING SHOULDERS (STA)	REMARKS
USH 10	50+11	-	140+95		--	845	--	182	
	113+02	-	114+08	RT	--	--	40	--	
	118+02	-	118+63	RT	--	--	25	--	
	140+95	-	141+85		150	20	350	2	
	141+85	-	187+00		--	420	--	90	
	187+00	-	209+00		--	205	--	44	
	209+00	-	252+00		--	400	--	86	
	252+00	-	270+00		--	170	--	36	
	270+00	-	294+80		--	230	--	50	
	294+80		305+00		--	95	--	20	
	305+00	-	508+03		--	1800	--	382	
	342+00	-	343+20	RT	--	--	45	--	
			TOTAL		150	4185	460	892	

* ADDITIONAL QUANTITIES ELSEWHERE

SALVAGED RAIL ITEM

STATION	-	STATION	OFFSET	614.0920 SALVAGED RAIL (LF)
114+05	-	114+58	RT	53
114+05	-	114+57	LT	52
115+03	-	116+43	RT	140
306+41	-	307+03	RT	62.5
306+50	-	307+00	LT	50
307+75	-	308+12	LT	37.5
314+80	-	315+30	RT	50
319+56	-	320+06	LT	50
320+28	-	320+65	RT	37.5
321+35	-	321+97	LT	62.5
322+70	-	323+07	RT	37.5
327+56	-	328+18	RT	62.5
331+43	-	331+80	RT	37.5
334+21	-	337+65	LT	365
335+16	-	336+63	RT	175
345+26	-	346+64	LT	137.5
354+36	-	354+73	RT	37.5
358+87	-	359+29	RT	50
359+49	-	359+91	RT	50
360+28	-	360+78	RT	50
365+45	-	365+83	RT	37.5
368+10	-	368+47	RT	37.5
368+27	-	368+65	LT	62.5
370+72	-	370+97	RT	25
370+82	-	371+23	LT	37.5
375+50	-	376+00	LT	50
375+81	-	376+18	RT	37.5
378+28	-	378+65	LT	37.5
378+70	-	379+07	RT	37.5
381+59	-	382+09	LT	50
381+66	-	382+28	RT	62.5
383+69	-	384+56	RT	87.5
395+89	-	396+26	RT	37.5
396+86	-	397+36	RT	50
412+65	-	413+02	LT	37.5
TOTAL				2,285.0

ALL ITEMS ARE CATEGORY 0010 UNLESS OTHERWISE SPECIFIED.

WIDENING REPAIR ITEMS

LOCATION	STATION	-	STATION	OFFSET	305.0110 BASE AGGREGATE DENSE 3/4 - INCH (TON)	310.0110 BASE AGGREGATE OPEN GRADED (TON)	315.0200 ASPHALTIC BASE WIDENING (TON) ** SALVAGED ASPHALTIC PAVEMENT	315.0200 ASPHALTIC BASE WIDENING (TON) * ** HMA PAVEMENT TYPE E-3 SPECIAL	SEE NOTES * ** ASPHALTIC MATERIAL PG64-34P (TON)	REMARKS
USH 10	73+37	-	78+37	RT/LT	6	375	319	97	5.3	APPROX SALVAGE DEPTH 10.25"
	95+90	-	100+90	RT/LT	6	375	319	97	5.3	APPROX SALVAGE DEPTH 10.25"
	106+78	-	111+78	RT/LT	6	375	319	97	5.3	APPROX SALVAGE DEPTH 10.25"
	136+70	-	141+70	RT/LT	6	375	319	97	5.3	APPROX SALVAGE DEPTH 10.25"
	222+30	-	227+30	RT/LT	6	375	265	97	5.3	APPROX SALVAGE DEPTH 8.5"
	236+56	-	241+56	RT/LT	6	375	265	97	5.3	APPROX SALVAGE DEPTH 8.5"
	249+95	-	254+95	RT/LT	6	375	265	97	5.3	APPROX SALVAGE DEPTH 8.5"
			TOTAL		42	2,625	2,071	679	37.3	
								2,750		

*ADDITIONAL QUANTITIES LOCATED ELSEWHERE
FOR INFORMATION ONLY, TO BE PAID FOR UNDER" HMA PAVEMENT TYPE E-3 SPECIAL" OR "HMA PAVEMENT TYPE E-10 SPECIAL".
**FOR INFORMATION ONLY, TO BE PAID FOR UNDER "ASPHALTIC BASE WIDENING" TOTAL.

ASPHALTIC SURFACE

LOCATION	STATION	-	STATION	OFFSET	465.0105 ASPHALTIC SURFACE (TON)	465.0110 ASPHALTIC SURFACE PATCHING (TON)	465.0120 ASPHALTIC SURFACE DRIVEWAYS AND FIELD ENTRANCES (TON)	465.0425.S ASPHALTIC SHOULDER RUMBLE STRIP 2-LANE RURAL (LF)	465.0450 ASPHALTIC INTERSECTION RUMBLE STRIP (SY)	465.0475.S ASPHALTIC CENTER LINE RUMBLE STRIP 2-LANE RURAL (LF)	REMARKS
USH 10	54+35		54+60	LT	--	--	--	--	30	--	
	56+60		56+85	LT	--	--	--	--	30	--	
	60+10		60+35	LT	--	--	--	--	30	--	
	132+59	-	132+85	RT	--	--	4	--	--	--	PE
	235+35	-	235+53	LT	--	--	3	--	--	--	PE
	244+29	-	244+46	RT	--	--	3	--	--	--	PE
	359+30	-	359+48	RT	--	--	6	--	--	--	PE
	50+11	-	508+02	LT/RT	--	--	--	86000	--	40200	
	50+11	-	508+02	LT/RT	250	--	--	--	--	--	SEE NOTE 1.
	50+11	-	508+02	LT/RT	3000	--	--	--	--	--	SEE NOTE 2.
	50+11	-	508+02	LT/RT	--	50	--	--	--	--	SEE NOTE 3.
	TOTAL				3250	50	16	86000	90	40200	

1. ASPHALTIC SURFACE TO BE USED FOR FULL DEPTH PAVEMENT REPAIRS (SUCH AS PAVEMENT EDGES THAT BREAK OR BREAK-UPS ON THE MILLED SURFACE.)
2. ASPHALTIC SURFACE TO BE USED FOR LEVELING AND WEDGING
3. ASPHALTIC SURFACE PATCHING TO BE USED TO MAKE MINOR REPAIRS (SUCH AS FILLINING POT HOLES, TRAFFIC POP-OUTS, OR FOR RAMPING AT BUTT JOINT SAW CUTS)

ALL ITEMS ARE CATEGORY 0010 UNLESS OTHERWISE SPECIFIED.

ASPHALTIC ITEMS

LOCATION	STATION	-	STATION	OFFSET	* SEE NOTE ASPHALTIC MATERIAL PG64-34P (TON)	455.0605 TACK COAT (GAL)	SPV.0170.01 REHEATING HMA PAVEMENT LONGITUDINAL JOINTS SPECIAL (STA)	* SPV.0195.01 HMA PAVEMENT TYPE E-3 SPECIAL (TON)	SPV.0195.02 HMA PAVEMENT TYPE E-10 SPECIAL (TON)	REMARKS
USH 10	49+96	-	50+45	CL	6.3	14	1	53	61	BEGIN CONSTRUCTION
	50+45	-	187+00	CL	605	1,364	273	5,117	5,879	MAINLINE
	209+00	-	252+00	CL	160	358	86	1,348	1,549	MAINLINE
	252+00	-	270+00	CL	67	150	36	564	648	MAINLINE
	270+00	-	294+80	CL	92	207	50	777	893	MAINLINE
	294+80	-	305+00	CL	38	85	21	320	367	MAINLINE
	305+00		507+53	CL	765	1,716	381	6,452	7,414	MAINLINE
	304+92	-	309+25	LT	2.1	5	--	18	20	WIDENING FOR GUARDRAIL
	305+47	-	316+18	RT	5.2	12	--	44	50	WIDENING FOR GUARDRAIL
	318+59	-	322+75	LT	1.6	4	--	13	15	WIDENING FOR GUARDRAIL
	319+22	-	324+20	RT	2.4	5	--	20	23	WIDENING FOR GUARDRAIL
	326+61	-	332+93	RT	3.0	7	--	26	30	WIDENING FOR GUARDRAIL
	334+75	-	338+88	LT	2.0	5	--	17	19	WIDENING FOR GUARDRAIL
	335+53	-	337+42	RT	0.8	2	--	6	7	WIDENING FOR GUARDRAIL
	340+88	-	343+82	RT	1.4	3	--	12	13	WIDENING FOR GUARDRAIL
	344+14	-	347+59	LT	1.3	3	--	11	13	WIDENING FOR GUARDRAIL
	352+91	-	371+55	RT	9.1	21	--	77	89	WIDENING FOR GUARDRAIL
	367+57	-	373+08	LT	2.7	6	--	23	26	WIDENING FOR GUARDRAIL
	374+43	-	380+16	LT	2.8	6	--	23	27	WIDENING FOR GUARDRAIL
	374+73	-	380+08	RT	2.6	6	--	22	25	WIDENING FOR GUARDRAIL
	381+02	-	414+15	LT	15.9	36	--	134	154	WIDENING FOR GUARDRAIL
	381+21	-	385+94	RT	2.1	5	--	18	21	WIDENING FOR GUARDRAIL
	394+57	-	398+49	RT	1.9	4	--	16	18	WIDENING FOR GUARDRAIL
	452+18	-	455+50	RT	1.6	4	--	13	15	WIDENING FOR GUARDRAIL
	507+53	-	508+03	CL	2.4	6	1	21	24	END CONSTRUCTION
518TH ST	10+15"B"	-	10+87"B"	PL	8.8	20	12	74	85	INCLUDES RT TURN LANE
635TH ST	9+85"A"	-	9+42"A"	PL	2.6	6	6	22	26	
610TH ST	10+20"C"	-	10+79"C"	PL	2.9	7	6	24	28	
	9+80"C"	-	9+34"C"	PL	2.6	6	5	22	26	
490TH AVE	10+19"D"	-	10+67"D"	PL	2.2	5	4	18	21	
	9+82"D"	-	9+31"D"	PL	2.3	5	4	19	22	
CTH DD	10+23"E"	-	11+07"E"	PL	5.1	12	10	44	50	
	9+77"E"	-	8+91"E"	PL	5.5	13	8	46	53	
450TH AVE	9+80"F"	-	8+93"F"	PL	5.5	12	8	46	53	
	10+21"G"	-	10+95"G"	PL	3.9	9	6	33	38	
CTH D	9+80"H"	-	8+89"H"	PL	6.2	14	8	52	60	
530TH ST	10+20"H"	-	10+76"H"	PL	3.3	7	6	28	32	
410TH AVE	9+79"I"	-	9+15"I"	PL	3.3	8	6	28	32	
	10+21"I"	-	10+81"I"	PL	3.1	7	6	26	30	
510TH ST	9+85"J"	-	9+25"J"	PL	3.8	9	5	32	37	
490TH ST	10+24"K"	-	10+70"K"	PL	2.9	7	5	25	29	
	9+85"L"	-	9+37"L"	PL	2.7	6	5	23	26	
	10+16"M"	-	10+75"M"	PL	2.0	5	5	17	20	
CTH A	9+85"N"	-	9+30"N"	PL	7.2	17	4	61	70	
			TOTAL:		1,869.8	4,210	968	15,786	18,138	

*ADDITIONAL QUANTITIES LOCATED ELSEWHERE
FOR INFORMATION ONLY, TO BE PAID FOR UNDER" HMA PAVEMENT TYPE E-3 SPECIAL" OR "HMA PAVEMENT TYPE E-10 SPECIAL".

ASPHALTIC FLUMES

STATION	-	STATION	OFFSET	465.0315 ASPHALTIC FLUMES (SY)
273+48	-	273+63	42'LT	27
TOTAL				27

ALL ITEMS ARE CATEGORY 0010 UNLESS OTHERWISE SPECIFIED.

CULVERT PIPE ITEMS

LOCATION	STATION	OFFSET	521.0124 CULVERT PIPE CORRUGATED STEEL 24-INCH (LF)	521.1524 APRON ENDWALLS FOR CULVERT PIPE SLOPED SIDE DRAINS STEEL 24-INCH 6 TO 1 (EACH)	522.1024 APRON ENDWALLS FOR CULVERT PIPE REINFORCED CONCRETE 24-INCH (EACH)	522.1030 APRON ENDWALLS FOR CULVERT PIPE REINFORCED CONCRETE 30-INCH (EACH)	522.1036 APRON ENDWALLS FOR CULVERT PIPE REINFORCED CONCRETE 36-INCH (EACH)	520.7000 CLEANING CULVERT PIPES (EACH)	523.0119 CULVERT PIPE REINFORCED CONCRETE HORIZONTAL ELLIPTICAL CLASS HE-III 19X30-INCH (LF)	523.0519 APRON ENDWALLS FOR CULVERT PIPE REINFORCED CONCRETE HORIZONTAL ELLIPTICAL 19X30-INCH (EACH)	524.0130 CULVERT PIPE SALVAGED 30-INCH (LF)	633.5200 MARKERS CULVERT END (EACH)	INLET ELEVATION	DISCHARGE ELEVATION	REMARKS
USH 10	97+88		--	--	--	2	--	1	--	--	--	2			
610TH ST	10+55"C"		--	--	--	--	--	1	--	--	--	--			
USH 10	108+65		--	--	--	--	--	1	--	--	--	--			
USH 10	129+50		--	--	--	--	--	1	--	--	--	--			
USH 10	141+40	34' LT/RT	--	--	--	--	--	--	136	4	--	2	943.01	942.40	2X56' CPRC-HE
USH 10	151+56		--	--	--	2	--	--	--	--	--	2			
USH 10	161+11		--	--	--	2	--	--	--	--	--	2			
USH 10	183+08		--	--	--	1	--	1	--	--	16	2			SEE NOTE 2
USH 10	203+15		--	--	2	--	--	1	--	--	--	--			
USH 10	226+70		--	--	--	--	--	1	--	--	--	--			
USH 10	274+07		--	--	--	2	--	1	--	--	--	2			
USH 10	294+50		--	--	--	--	2	--	--	--	--	2			
USH 10	311+70		--	--	2	--	--	--	--	--	--	2			
USH 10	321+31		--	--	--	--	--	1	--	--	--	--			
490TH ST	10+72"K"	LT	--	--	--	--	--	1	--	--	--	--			
USH 10	330+31	LT	--	--	--	--	--	1	--	--	--	--			C-47-49 BOX CULVERT
USH 10	342+17	RT	37	1	--	--	--	--	--	--	--	1			SEE NOTE 1
USH 10	357+45	LT	--	--	--	--	--	1	--	--	--	--			C-47-50 BOX CULVERT
USH 10	384+08	RT	--	--	--	--	--	1	--	--	--	--			B-47-80 BOX CULVERT
USH 10	405+50	RT	--	--	--	--	--	1	--	--	--	--			24" CULVERT PIPE
USH 10	415+60	RT	--	--	--	--	--	1	--	--	--	--			24" CULVERT PIPE
USH 10	438+38	RT	--	--	--	--	--	1	--	--	--	--			36" CULVERT PIPE
USH 10	446+20	RT	--	--	--	--	2	--	--	--	--	2			
USH 10	454+02	RT	--	--	--	--	--	1	--	--	--	--			C-47-51 BOX CULVERT
USH 10	459+55	LT	--	--	1	--	--	--	--	--	--	1			
USH 10	482+16	RT	--	--	2	--	--	1	--	--	--	2			24" CULVERT PIPE
	TOTAL		37	1	7	9	4	18	136	4	16	22			

NOTES:
1.) MINIMUM THICKNESS FOR STEEL = 0.064 INCHES
2.) RELAY SOUTH END OF EXISTING PIPE TO REPAIR SEPARATED JOINT.

ALL ITEMS ARE CATEGORY 0010 UNLESS OTHERWISE SPECIFIED.

CONCRETE CURB AND GUTTER ITEMS

LOCATION	STATION	-	STATION	OFFSET	601.0553 CONCRETE CURB AND GUTTER 4-INCH SLOPED 36-INCH TYPE D (LF)	601.0557 CONCRETE CURB AND GUTTER 6-INCH SLOPED 36-INCH TYPE D (LF)	611.3902 INLETS MEDIAN 2 GRATE (EACH)	611.0642 INLET COVERS TYPE MS (EACH)	SPV.0090.01 CONCRETE CURB AND GUTTER CURE AND SEAL TREATMENT (LF)
USH 10	113+02	-	114+08	RT	106	--	--	--	106
USH 10	118+02	-	118+63	RT	61	--	--	--	61
USH 10	342+00	-	343+20	RT	--	120	--	--	120
USH 10	342+37	-	-	RT	--	--	1	2	--
518TH ST	10+15"B"	-	10+87"B"	LT/RT	--	165	--	--	165
635TH ST	9+85"A"	-	9+42"A"	LT/RT	--	117	--	--	117
610TH ST	10+20"C"	-	10+79"C"	LT/RT	--	83	--	--	83
610TH ST	9+80"C"	-	9+34"C"	LT/RT	--	78	--	--	78
490TH AVE	10+19"D"	-	10+67"D"	LT/RT	40	36	--	--	76
490TH AVE	9+82"D"	-	9+31"D"	LT/RT	45	27	--	--	72
CTH DD	10+23"E"	-	11+07"E"	LT/RT	--	111	--	--	111
CTH DD	9+77"E"	-	8+91"E"	LT/RT	--	107	--	--	107
410TH AVE	9+79"I"	-	9+15"I"	LT/RT	--	99	--	--	99
410TH AVE	10+21"I"	-	10+81"I"	LT/RT	--	94	--	--	94
490TH ST	10+24"K"	-	10+70"K"	LT/RT	--	144	--	--	144
490TH ST	9+85"L"	-	9+37"L"	LT/RT	--	128	--	--	128
400TH ST	10+16"M"	-	10+75"M"	LT/RT	--	99	--	--	99
CTH A	9+85"N"	-	9+30"N"	LT/RT	--	154	--	--	154
			TOTAL:		252	1562	1	2	1814

RIP RAP AND GEOTEXTILE FABRIC

STATION	OFFSET	606.0100 RIPRAP LIGHT (CY)	606.0200 RIPRAP MEDIUM (CY)	645.0120 GEOTEXTILE FABRIC TYPE HR (SY)	645.0130 GEOTEXTILE FABRIC TYPE R (SY)
52+39	69' RT	2	--	7	--
161+11	36' RT	--	5	--	3
311+71	45' RT	--	3	--	2
320+91	35' LT	--	16	--	11
342+00	30' RT	--	7	--	4
342+71	58' LT	--	7	--	4
TOTAL		2	38	7	24

TEMPORARY PRECAST BARRIER & CRASH CUSHIONS

STATION	-	STATION	STAGE	603.8000 CONCRETE BARRIER TEMPORARY PRECAST DELIVERED (LF)	603.8125 CONCRETE BARRIER TEMPORARY PRECAST INSTALLED (LF)	614.0905 CRASH CUSHIONS TEMPORARY (EACH)
334+65	-	339+90	1	475	475	2
335+25	-	340+00	2	--	475	2
		TOTAL		475	950	4

ALL ITEMS ARE CATEGORY 0010 UNLESS OTHERWISE SPECIFIED.

GUARDRAIL ITEMS

STATION	-	STATION	OFFSET	614.0115 ANCHORAGES FOR STEEL PLATE BEAM GUARD TYPE 2 (EACH)	614.0305 STEEL PLATE BEAM GUARD CLASS A (LF)	614.0340 STEEL PLATE BEAM GUARD OVER LOW-FILL CULVERTS CLASS A (LF)	614.0345 STEEL PLATE BEAM GUARD SHORT RADIUS (LF)	614.0370 STEEL PLATE BEAM GUARD ENERGY ABSORBING TERMINAL (EACH)	614.0390 STEEL PLATE BEAM GUARD SHORT RADIUS TERMINAL (EACH)	614.0400 ADJUSTING STEEL PLATE BEAM GUARD (LF)	614.2300 MGS GUARDRAIL 3 (LF)	614.2340 MGS GUARDRAIL 3L (LF)	614.2610 MGS GUARDRAIL TREATMENT EAT (EACH)
113+00	-	113+53	RT	--	--	--	--	--	--	--	--	--	1
113+53	-	114+03	RT	--	--	--	--	--	--	--	50	--	--
114+03	-	114+56	RT	--	--	--	--	--	--	--	--	--	1
114+96	-	115+49	RT	--	--	--	--	--	--	--	--	--	1
115+49	-	115+99	RT	--	--	--	--	--	--	--	50	--	--
115+99	-	116+52	RT	--	--	--	--	--	--	--	--	--	1
116+92	-	117+45	RT	--	--	--	--	--	--	--	--	--	1
117+45	-	118+08	RT	--	--	--	--	--	--	--	62.5	--	--
118+08	-	118+61	RT	--	--	--	--	--	--	--	--	--	1
305+50	-	306+00	LT	--	--	--	--	1	--	--	--	--	--
306+00	-	307+00	LT	--	100	--	--	--	--	--	--	--	--
306+03	-	306+53	RT	--	--	--	--	1	--	--	--	--	--
306+53	-	307+03	RT	--	50	--	--	--	--	--	--	--	--
307+00	-	307+75	LT	--	--	--	--	--	--	75	--	--	--
307+03	-	314+80	RT	--	--	--	--	--	--	777	--	--	
307+75	-	308+25	LT	--	50	--	--	--	--	--	--	--	--
308+25	-	308+75	LT	--	--	--	--	1	--	--	--	--	--
314+80	-	315+05	RT	--	25	--	--	--	--	--	--	--	--
315+05	-	315+55	RT	--	--	--	--	1	--	--	--	--	--
319+06	-	319+56	LT	--	--	--	--	1	--	--	--	--	--
319+56	-	320+06	LT	--	50	--	--	--	--	--	--	--	--
319+78	-	320+28	RT	--	--	--	--	1	--	--	--	--	--
320+28	-	320+65	RT	--	37.5	--	--	--	--	--	--	--	--
320+06	-	321+35	LT	--	--	--	--	--	--	129	--	--	--
320+65	-	322+70	RT	--	--	--	--	--	--	205	--	--	--
321+35	-	321+72	LT	--	37.5	--	--	--	--	--	--	--	--
321+72	-	322+22	LT	--	--	--	--	1	--	--	--	--	--
322+70	-	323+07	RT	--	37.5	--	--	--	--	--	--	--	--
323+07	-	323+57	RT	--	--	--	--	1	--	--	--	--	--
327+68	-	328+18	RT	--	50	--	--	--	--	--	--	--	--
327+18	-	327+68	RT	--	--	--	--	1	--	--	--	--	--
328+18	-	331+43	RT	--	--	--	--	--	--	325	--	--	--
331+43	-	331+80	RT	--	37.5	--	--	--	--	--	--	--	--
331+80	-	332+30	RT	--	--	--	--	1	--	--	--	--	--
334+20	-	336+15	LT	--	--	--	--	--	--	195	--	--	--
334+21	-	336+15	LT	1	212.5	--	--	--	--	--	--	--	--
335+16	-	335+50	RT	--	--	--	36	--	1	--	--	--	--
335+50	-	336+63	RT	--	112.5	--	--	--	--	--	--	--	--
336+15	-	337+15	LT	--	--	100	--	--	--	--	--	--	--
336+26	-	336+63	RT	--	38	--	--	--	--	--	--	--	--
336+63	-	336+78	RT	--	--	--	16	--	1	--	--	--	--
337+15		337+78	LT	--	62.5	--	--	--	--	--	--	--	--
337+78		338+28	LT	--	--	--	--	1	--	--	--	--	--
		SUBTOTAL		1	900.5	100	52	11	2	1706	162.5	0	6

CONTINUED ON NEXT PAGE

ALL ITEMS ARE CATEGORY 0010 UNLESS OTHERWISE SPECIFIED.

GUARDRAIL ITEMS CONTINUED

STATION	-	STATION	OFFSET	614.0115 ANCHORAGES FOR STEEL PLATE BEAM GUARD TYPE 2 (EACH)	614.0305 STEEL PLATE BEAM GUARD CLASS A (LF)	614.0340 STEEL PLATE BEAM GUARD OVER LOW-FILL CULVERTS CLASS A (LF)	614.0345 STEEL PLATE BEAM GUARD SHORT RADIUS (LF)	614.0370 STEEL PLATE BEAM GUARD ENERGY ABSORBING TERMINAL (EACH)	614.0390 STEEL PLATE BEAM GUARD SHORT RADIUS TERMINAL (EACH)	614.0400 ADJUSTING STEEL PLATE BEAM GUARD (LF)	614.2300 MGS GUARDRAIL 3 (LF)	614.2340 MGS GUARDRAIL 3L (LF)	614.2610 MGS GUARDRAIL TREATMENT EAT (EACH)
344+90	-	345+43	LT	--	--	--	--	--	--	--	--	--	1
345+43	-	346+56	LT	--	--	--	--	--	--	--	--	112.5	--
346+56	-	347+09	LT	--	--	--	--	--	--	--	--	--	1
353+48	-	353+98	RT	--	--	--	--	1	--	--	--	--	--
353+98	-	354+73	RT	--	75	--	--	--	--	--	--	--	--
357+73	-	358+87	RT	--	--	--	--	--	--	114	--	--	--
358+87	-	359+12	RT	--	25	--	--	--	--	--	--	--	--
359+12	-	359+29	RT	--	--	--	8	--	--	--	--	--	--
359+29	-	359+29	RT	--	--	--	--	--	1	--	--	--	--
359+49	-	359+49	RT	--	--	--	--	--	1	--	--	--	--
359+49	-	359+65	RT	--	--	--	16	--	--	--	--	--	--
359+65	-	360+78	RT	--	112.5	--	--	--	--	--	--	--	--
360+78	-	365+43	RT	--	--	--	--	--	--	465	--	--	--
365+45	-	368+47	RT	--	302	--	--	--	--	--	--	--	--
368+15	-	368+65	LT	--	--	--	--	1	--	--	--	--	--
368+65	-	369+27	LT	--	62.5	--	--	--	--	--	--	--	--
368+69	-	370+86	LT	--	--	--	--	--	--	217	--	--	--
368+65	-	370+72	RT	--	--	--	--	--	--	207	--	--	--
370+86	-	376+00	LT	--	512.5	--	--	--	--	--	--	--	--
370+72	-	370+97	RT	--	25	--	--	--	--	--	--	--	--
370+97	-	371+03	RT	--	--	--	8	--	--	--	--	--	--
371+03	-	371+03	RT	--	--	--	--	--	1	--	--	--	--
375+31	-	375+81	RT	--	--	--	--	1	--	--	--	--	--
375+81	-	376+18	RT	--	37.5	--	--	--	--	--	--	--	--
		SUBTOTAL		0	1152	0	32	3	3	1003	0	112.5	2

CONTINUED ON NEXT PAGE

ALL ITEMS ARE CATEGORY 0010 UNLESS OTHERWISE SPECIFIED.

GUARDRAIL ITEMS CONTINUED

STATION	-	STATION	OFFSET	614.0115 ANCHORAGES FOR STEEL PLATE BEAM GUARD TYPE 2 (EACH)	614.0305 STEEL PLATE BEAM GUARD CLASS A (LF)	614.0340 STEEL PLATE BEAM GUARD OVER LOW-FILL CULVERTS CLASS A (LF)	614.0345 STEEL PLATE BEAM GUARD SHORT RADIUS (LF)	614.0370 STEEL PLATE BEAM GUARD ENERGY ABSORBING TERMINAL (EACH)	614.0390 STEEL PLATE BEAM GUARD SHORT RADIUS TERMINAL (EACH)	614.0400 ADJUSTING STEEL PLATE BEAM GUARD (LF)	614.2300 MGS GUARDRAIL 3 (LF)	614.2340 MGS GUARDRAIL 3L (LF)	614.2610 MGS GUARDRAIL TREATMENT EAT (EACH)
376+00	-	378+28	LT	--	--	--	--	--	--	228	--	--	--
376+18	-	378+70	RT	--	--	--	--	--	--	252	--	--	--
378+28	-	379+03	LT	--	75	--	--	--	--	--	--	--	--
378+70	-	378+95	RT	--	25	--	--	--	--	--	--	--	--
378+95	-	379+45	RT	--	--	--	--	1	--	--	--	--	--
379+03	-	379+53	LT	--	--	--	--	1	--	--	--	--	--
381+44	-	381+59	LT	--	--	--	16	--	--	--	--	--	--
381+44	-	381+44	LT	--	--	--	--	--	1	--	--	--	--
381+59	-	382+09	LT	--	50	--	--	--	--	--	--	--	--
381+60	-	381+78	RT	--	--	--	16	--	--	--	--	--	--
381+60	-	381+60	RT	--	--	--	--	--	1	--	--	--	--
381+78	-	382+28	RT	--	50	--	--	--	--	--	--	--	--
382+09	-	412+65	LT	--	--	--	--	--	--	3056	--	--	--
382+28	-	383+69	RT	--	--	--	--	--	--	141	--	--	--
383+69	-	384+82	RT	--	112.5	--	--	--	--	--	--	--	--
384+82	-	385+32	RT	--	--	--	--	1	--	--	--	--	--
395+13	-	395+63	RT	--	--	--	--	1	--	--	--	--	--
395+63	-	396+26	RT	--	62.5	--	--	--	--	--	--	--	--
396+26	-	396+86	RT	--	--	--	--	--	--	60	--	--	--
396+86	-	397+36	RT	--	50	--	--	--	--	--	--	--	--
397+36	-	397+86	RT	--	--	--	--	1	--	--	--	--	--
412+65	-	413+02	LT	--	37.5	--	--	--	--	--	--	--	--
413+02	-	413+52	LT	--	--	--	--	1	--	--	--	--	--
452+50	-	453+03	RT	--	--	--	--	--	--	--	--	--	1
453+03	-	453+28	RT	--	--	--	--	--	--	--	25	--	--
453+28	-	454+41	RT	--	--	--	--	--	--	--	--	112.5	--
454+41	-	454+94	RT	--	--	--	--	--	--	--	--	--	1
		SUBTOTAL		0	462.5	0	32	6	2	3737.00	25	112.5	2
		TOTAL		1	2515	100	116	20	7	6446	187.5	225.0	10

MOBILIZATION

PROJECT	619.1000 MOBILIZATION (EACH)
1530-07-62	1
TOTAL	1

MOBILIZATION EROSION CONTROL

PROJECT	628.1905 MOBILIZATIONS EROSION CONTROL (EACH)	628.1910 MOBILIZATIONS EMERGENCY EROSION CONTROL (EACH)	618.0100 MAINTENANCE AND REPAIR OF HAUL ROADS (PROJECT)
1530-07-62	6	4	1
TOTAL	6	4	1

ALL ITEMS ARE CATEGORY 0010 UNLESS OTHERWISE SPECIFIED.

3

BARRIER SYSTEM GRADING SHAPING FINISHING, ITEM 614.0010

STATION	-	STATION	OFFSET	EACH	*AREA*	* EXCAVATION COMMON	* BORROW	* SALVAGED TOPSOIL	* FERTILIZER TYPE B	* SEEDING	* MULCHING
					SF	(CY)	(CY)	(SY)	(CWT)	(LB)	(SY)
304+90	-	307+00	LT	1	3325	134	--	369	0.2	10	--
304+90	-	307+05	RT	1	3295	--	64	366	0.2	10	--
307+75	-	309+25	LT	1	3650	250	--	406	0.3	11	406
314+80	-	316+20	RT	1	1910	20	30	212	0.1	6	--
318+60	-	320+60	LT	1	2160	--	13	240	0.2	6	--
318+60	-	320+60	RT	1	1970	38	--	219	0.1	6	--
321+50	-	322+75	LT	1	3680	55	20	409	0.3	11	--
322+75	-	324+20	RT	1	2190	65	22	243	0.2	7	--
326+60	-	328+25	RT	1	2785	8	48	309	0.2	8	--
331+50	-	332+90	RT	1	2055	7	3	228	0.1	6	--
336+25		338+90	LT	1	3450	38	115	383	0.2	10	116
336+25	-	337+75	RT	1	545	52	105	61	0.1	2	61
341+45	-	343+80	RT	1	2200	49	110	244	0.2	7	--
344+15	-	347+40	LT	1	4520	8.0	180	502	0.3	14	502
352+25	-	354+75	RT	1	2090	--	54	232	0.1	6	232
358+87	-	359+29	RT	1	630	--	70	70	0.1	2	70
359+50	-	360+07	RT	1	745	--	--	83	0.1	2	83
360+35	-	360+78	RT	1	560	--	--	62	0.0	2	62
365+45	-	368+50	RT	1	5390	--	5	599	0.4	16	--
367+60	-	369+40	LT	1	1840	--	5	204	0.1	6	25
370+75	-	371+00	RT	1	640	70	55	71	0.1	2	71
370+80	-	373+10	LT	1	1830	--	55	203	0.1	5	--
374+45	-	376+20	LT	1	1530	--	60	170	0.1	5	--
374+45	-	376+20	RT	1	1570	--	30	174	0.1	5	--
378+30	-	380+15	LT	1	600	8	20	67	0.1	2	67
378+30	-	380+15	RT	1	785	--	26	87	0.1	2	87
381+44	-	382+12	LT	1	300	--	--	33	0.1	1	33
381+70	-	382+40	RT	1	1400	--	50	156	0.1	4	156
383+70	-	385+30	RT	1	2746	165	--	305	0.2	8	305
394+50	-	396+30	RT	1	3670	--	191	408	0.3	11	--
397+00	-	398+50	RT	1	2385	--	165	265	0.2	7	265
412+70	-	414+35	LT	1	1570	--	25	174	0.1	5	174
452+20	-	455+90	RT	1	3435	--	35	382	0.2	10	382
		TOTAL		33		967	1521	7939	5	214	3097

* ITEMS & QUANTITIES LISTED FOR BID INFORMATION ONLY

EROSION MAT URBAN CLASS I TYPE A

STATION	-	STATION	OFFSET	* 628.2006 EROSION MAT URBAN CLASS I TYPE A (SY)
304+90	-	307+00	LT	369
304+90	-	307+05	RT	366
307+60	-	309+30	LT	406
314+80	-	316+20	RT	212
318+60	-	320+05	LT	240
319+05	-	320+60	RT	219
321+36	-	323+25	LT	409
322+75	-	324+20	RT	243
326+55	-	328+20	RT	310
331+40	-	332+90	RT	228
335+75	-	337+40	LT	267
341+55	-	343+70	RT	244
365+45	-	368+50	RT	599
370+80	-	373+10	LT	203
374+45	-	376+20	LT	170
374+45	-	376+20	RT	174
394+50	-	396+30	RT	408
		TOTAL		5068

*ADDITIONAL QUANTITIES LOCATED ELSEWHERE

FIELD FACILITIES

PROJECT	642.5001 FIELD OFFICE TYPE B (EACH)
1530-07-62	1
TOTAL	1

ALL ITEMS ARE CATEGORY 0010 UNLESS OTHERWISE SPECIFIED.

LANDSCAPING AND RESTORATION ITEMS

LOCATION	STATION	-	STATION	OFFSET	625.0100 TOPSOIL (SY)	* 628.2006 EROSION MAT URBAN CLASS I TYPE A (SY)	629.0210 FERTILIZER TYPE B (CWT)	630.0120 SEEDING MIXTURE TYPE 20 (LB)	REMARKS
USH 10	97+88	-		RT/LT	36	36	0.02	1	
USH 10	108+45	-	109+00	LT	121	44	0.08	3	
USH 10	140+95	-	141+85	RT/LT	127	127	0.08	3	
USH 10	151+56	-		RT/LT	36	36	0.02	1	
USH 10	161+11	-		RT/LT	36	36	0.02	1	
USH 10	183+08	-		RT/LT	18	18	0.01	0	
USH 10	203+15	-		RT/LT	36	36	0.02	1	
USH 10	238+10	-		RT/LT	36	36	0.02	1	
USH 10	272+95	-		RT/LT	89	40	0.06	2	
USH 10	273+60	-	274+10	LT	156	53	0.10	4	
USH 10	294+30	-	295+10	RT	289	111	0.18	8	
USH 10	294+50	-		RT/LT	18	18	0.01	0	
USH 10	310+90	-		RT/LT	36	36	0.02	1	
USH 10	320+91	-		LT	76	18	0.05	2	
USH 10	333+55	-		LT	89	31	0.06	2	
USH 10	342+00	-	343+20	RT	67	67			
USH 10	342+71	-		LT	18	18	0.01	0	
USH 10	356+10	-	356+60	LT	89	44	0.06	2	
USH 10	405+30	-	405+70	RT	71	36	0.04	2	
USH 10	415+40	-	415+80	RT	36	36	0.02	2	
USH 10	438+20	-	438+60	RT	53	36	0.03	1	
USH 10	446+20	-		RT/LT	36	36	0.02	1	
USH 10	459+35	-	459+75	LT	89	58	0.06	2	
USH 10	482+16	-		RT/LT	36	36	0.02	1	
518TH ST	10+15"B"	-	10+87"B"	LT/RT	92	92	0.06	2	
635TH ST	9+85"A"	-	9+42"A"	LT/RT	65	65	0.04	2	
610TH ST	10+20"C"	-	10+79"C"	LT/RT	46	46	0.03	1	
610TH ST	9+80"C"	-	9+34"C"	LT/RT	43	43	0.03	1	
490TH AVE	10+19"D"	-	10+67"D"	LT/RT	42	42	0.03	1	
490TH AVE	9+82"D"	-	9+31"D"	LT/RT	40	40	0.03	1	
CTH DD	10+23"E"	-	11+07"E"	LT/RT	62	62	0.04	2	
CTH DD	9+77"E"	-	8+91"E"	LT/RT	59	59	0.04	2	
410TH AVE	9+79"I"	-	9+15"I"	LT/RT	55	55	0.03	1	
410TH AVE	10+21"I"	-	10+81"I"	LT/RT	52	52	0.03	1	
490TH ST	10+24"K"	-	10+70"K"	LT/RT	80	80	0.05	2	
490TH ST	9+85"L"	-	9+37"L"	LT/RT	71	71	0.04	2	
400TH ST	10+16"M"	-	10+75"M"	LT/RT	55	55	0.03	1	
CTH A	9+85"N"	-	9+30"N"	LT/RT	86	86	0.05	2	
	TOTAL				2,537	1887	2	68	

*ADDITIONAL QUANTITIES LOCATED ELSEWHERE

SILT FENCE

STATION	-	STATION		628.1504 SILT FENCE (LF)	628.1520 SILT FENCE MAINTENANCE (LF)
335+85	-	336+72	RT	115	230
337+40	-	339+35	LT	200	400
343+75	-	347+35	LT	380	760
352+75	-	354+80	RT	210	420
358+75	-	359+25	RT	55	110
359+50	-	361+00	RT	150	300
368+50	-	369+35	LT	80	160
370+50	-	371+00	RT	70	140
371+20	-	371+70	RT	60	120
378+20	-	380+40	LT	220	440
378+65	-	379+75	RT	110	220
381+50	-	382+40	LT	120	240
381+65	-	382+50	RT	105	210
383+70	-	385+35	RT	180	360
396+70	-	398+60	RT	200	400
412+55	-	414+40	LT	190	380
	TOTAL			2445	4890

TEMPORARY DITCH CHECKS

STATION		628.7504 TEMPORARY DITCH CHECKS (LF)
307+05	LT	15
307+05	RT	15
320+15	LT	15
320+70	RT	15
321+33	LT	15
322+75	RT	15
328+25	RT	15
331+45	RT	15
341+80	RT	15
342+37	RT	30
367+00	RT	15
369+20	RT	15
369+25	LT	15
370+85	LT	15
371+50	LT	15
376+10	LT	15
376+20	RT	15
396+30	RT	15
TOTAL		285

TRAFFIC CONTROL (PROJECT)

PROJECT	643.0100 TRAFFIC CONTROL (PROJECT) (EACH)
1530-07-62	1
TOTAL	1

ALL ITEMS ARE CATEGORY 0010 UNLESS OTHERWISE SPECIFIED.

ERECTION AND REMOVAL OF TYPE II SIGNS AND SUPPORTS

SIGN NO.	SIGN CODE	W X H	637.0202 SIGNS REFLECTIVE TYPE II SF	634.0614 POSTS WOOD 4X6-INCH X 14-FT (EACH)	634.0616 POSTS WOOD 4X6-INCH X 16-FT (EACH)	634.0618 POSTS WOOD 4X6-INCH X 18-FT (EACH)	638.2602 REMOVING SIGNS TYPE II (EACH)	638.3000 REMOVING SMALL SIGN SUPPORTS (EACH)	REMARKS
100	D2-2	90" X 24"	15.00	--	2	--	3	2	
101	J4-1	24" X 36"	6.00	1	--	--	--	--	
102	R5-1A	36" X 24"	6.00	1	--	--	1	1	
103	W1-6	48" X 24"	8.00	1	--	--	1	1	
104	R6-3A	30" X 24"	5.00	--	--	1	1	1	
105	R1-1	36" X 36"	7.46	--	--	--	1	--	
106	J3-2	48" X 57"	19.00	--	1	--	6	1	
107	W12-1D	24" X 24"	4.00	1	--	--	1	1	
108	R1-1	36" X 36"	7.46	1	--	--	1	1	
109	J3-2	48" X 57"	19.00	--	1	--	6	1	
110	R5-1	30" X 30"	6.25	1	--	--	1	1	
111	R2-1	24" X 30"	5.00	1	--	--	1	1	
112			--	--	--	--	1	1	REMOVE ONLY
113	D1-3	72" X 36"	18.00	--	2	--	1	2	
114			--	--	--	--	--	--	EXISTING TO REMAIN
115	W3-1	36" X 36"	9.00	1	--	--	1	1	
116	J2-4	96" X 57"	38.00	--	2	--	12	2	
117			--	--	--	--	1	1	REMOVE ONLY
118	J1-2	48" X 39"	13.00	1	--	--	4	1	
119	R1-1	30" X 30"	5.18	1	--	--	1	1	
120	R1-1	30" X 30"	5.18	1	--	--	1	1	
121	W14-3	48" X 36"	6.00	1	--	--	1	1	
123	W14-3	48" X 36"	6.00	1	--	--	1	1	
124	R1-1	30" X 30"	5.18	1	--	--	1	1	
125	R1-1	30" X 30"	5.18	1	--	--	1	1	
126	R7-1R	18" X 24"	3.00	1	--	--	1	1	
127	R7-1L	18" X 24"	3.00	1	--	--	1	1	
128	R7-1D	18" X 24"	3.00	1	--	--	1	1	
129	R7-1D	18" X 24"	3.00	1	--	--	1	1	
130	R7-1R	18" X 24"	3.00	1	--	--	1	1	
131	R7-1L	18" X 24"	3.00	1	--	--	1	1	
132	R1-1	30" X 30"	5.18	1	--	--	1	1	
133	R1-1	30" X 30"	5.18	1	--	--	1	1	
134	W14-3	48" X 36"	6.00	1	--	--	1	1	
135	W14-3	48" X 36"	6.00	1	--	--	1	1	
136	J1-1	24" X 39"	6.50	1	--	--	2	1	
137	W14-3	48" X 36"	6.00	1	--	--	1	1	
138	W14-3	48" X 36"	6.00	1	--	--	1	1	
139			--	--	--	--	--	--	EXISTING TO REMAIN
	SUBTOTAL		277.75	28	8	1	63	38	

CONTINUED ON NEXT PAGE

CULVERT PIPE CHECKS

628.7555

STATION		CULVERT PIPE CHECKS (EACH)
97+83	LT	5
108+66	LT	5
141+34	LT	4
141+40	LT	4
151+56	LT	5
161+11	LT	5
183+08	RT	5
203+15	LT	3
238+10	RT	5
272+95	LT	5
274+07	LT	5
294+50	LT	5
310+90	LT	3
320+91	LT	5
333+64	LT	6
342+00	RT	3
356+38	LT	8
405+54	RT	3
415+62	RT	3
438+39	RT	5
446+21	LT	5
482+16	LT	3
501+67	LT	5
TOTAL		105

TRAFFIC CONTROL SIGNS PCMS

643.1050

LOCATION	STAGE	DAYS	PORTABLE CHANGEABLE MESSAGE SIGNS	TRAFFIC CONTROL SIGNS PCMS (DAY)
USH 10	-	7	2	14
		TOTAL		14

ALL ITEMS ARE CATEGORY 0010 UNLESS OTHERWISE SPECIFIED.

ERECTION AND REMOVAL OF TYPE II SIGNS AND SUPPORTS - CONTINUED

SIGN NO.	SIGN CODE	W X H	637.0202 SIGNS REFLECTIVE TYPE II SF	634.0614 POSTS WOOD 4X6-INCH X 14-FT (EACH)	634.0616 POSTS WOOD 4X6-INCH X 16-FT (EACH)	634.0618 POSTS WOOD 4X6-INCH X 18-FT (EACH)	638.2602 REMOVING SIGNS TYPE II (EACH)	638.3000 REMOVING SMALL SIGN SUPPORTS (EACH)	REMARKS
140	J13-2	48" X 45"	15.00	1	--	--	4	1	
141	R1-1	30" X 30"	5.18	1	--	--	1	1	
142	J13-1	24" X 45"	7.50	1	--	--	2	1	
143	J13-1	24" X 45"	7.50	1	--	--	2	1	
144	R1-1	30" X 30"	5.18	1	--	--	1	1	
145	J13-2	48" X 45"	15.00	1	--	--	4	1	
146			--	--	--	--	--	--	EXISTING TO REMAIN
147	J1-1	24" X 39"	6.50	1	--	--	2	1	
148	R1-1	30" X 30"	5.18	1	--	--	1	1	
149	R1-1	30" X 30"	5.18	1	--	--	1	1	
150	W14-3	48" X 36"	6.00	1	--	--	1	1	
151	W14-3	48" X 36"	6.00	1	--	--	1	1	
152	J1-1	24" X 39"	6.50	1	--	--	2	1	
153	J4-1	24" X 36"	6.00	1	--	--	2	1	
154	R1-1	30" X 30"	5.18	1	--	--	1	1	
155	J13-1	24" X 45"	7.50	1	--	--	2	1	
156	R1-1	30" X 30"	5.18	1	--	--	1	1	
157	J13-1	24" X 45"	7.50	1	--	--	2	1	
158	J13-1	24" X 45"	7.50	1	--	--	2	1	
159	J4-1	24" X 36"	6.00	1	--	--	2	1	
160	J1-1	24" X 39"	6.50	1	--	--	2	1	
161	R1-1	30" X 30"	5.18	1	--	--	1	1	
162	R1-1	30" X 30"	5.18	1	--	--	1	1	
163	W14-3	48" X 36"	6.00	1	--	--	1	1	
164	W14-3	48" X 36"	6.00	1	--	--	1	1	
165	W1-2L	30" X 30"	6.25	1	--	--	1	1	
166	R1-1	30" X 30"	5.18	1	--	--	1	1	
167	W2-2	30" X 30"	6.25	1	--	--	1	1	
168	W1-2R	30" X 30"	6.25	1	--	--	1	1	
169	R3-72	30" X 36"	7.50	1	--	--	--	--	
170	W4-2R	36" X 36"	9.00	1	--	--	1	1	
171	W4-2R	36" X 36"	9.00	1	--	--	--	--	
172	W1-2L	30" X 30"	6.25	1	--	--	1	1	
173	W9-1R	36" X 36"	6.25	1	--	--	1	1	
174			--	--	--	--	--	--	EXISTING TO REMAIN
175	R1-1	30" X 30"	5.18	1	--	--	1	1	
176	R1-1	30" X 30"	5.18	1	--	--	1	1	
177			--	--	--	--	--	--	EXISTING TO REMAIN
178	W1-2R	30" X 30"	6.25	--	1	--	1	1	
179	W13-1	18" X 18"	2.25	--	--	--	--	--	
	SUBTOTAL		245.23	35	1	--	50	34	

CONTINUED ON NEXT PAGE

ALL ITEMS ARE CATEGORY 0010 UNLESS OTHERWISE SPECIFIED.

ERECTION AND REMOVAL OF TYPE II SIGNS AND SUPPORTS - CONTINUED

SIGN NO.	SIGN CODE	W X H	637.0202 SIGNS REFLECTIVE TYPE II SF	634.0614 POSTS WOOD 4X6-INCH X 14-FT (EACH)	634.0616 POSTS WOOD 4X6-INCH X 16-FT (EACH)	634.0618 POSTS WOOD 4X6-INCH X 18-FT (EACH)	638.2602 REMOVING SIGNS TYPE II (EACH)	638.3000 REMOVING SMALL SIGN SUPPORTS (EACH)	REMARKS
187	W1-2L	30" X 30"	6.25	1	--	--	1	1	
190	R4-3	24" X 30"	5.00	1	--	--	1	1	
196	W1-2L	30" X 30"	6.25	--	1	--	1	1	
197	W13-1	18" X 18"	2.25	--	--	--	--	--	
198	W1-2R	30" X 30"	6.25	1	--	--	1	1	
199	W14-3	48" X 36"	6.00	1	--	--	1	1	
200	W14-3	48" X 36"	6.00	1	--	--	1	1	
201	W1-2L	30" X 30"	6.25	1	--	--	1	1	
202	R4-51	36" X 48"	12.00	--	1	--	--	--	
203	W1-2R	30" X 30"	6.25	--	1	--	1	1	
204	W13-1	18" X 18"	2.25	--	--	--	1	--	
205	W1-2R	30" X 30"	6.25	1	--	--	1	1	
206	R4-51	36" X 48"	12.00	--	1	--	--	--	
207	W1-2L	30" X 30"	6.25	--	1	--	1	1	
208	W13-1	18" X 18"	2.25	--	--	--	1	--	
209	W14-3	48" X 36"	6.00	1	--	--	1	1	
210	R1-1	30" X 30"	5.18	1	--	--	1	1	
211	W14-3	48" X 36"	6.00	1	--	--	1	1	
212	J1-1	24" X 39"	6.50	1	--	--	2	1	
214	J4-1	24" X 36"	6.00	1	--	--	2	1	
215	J13-1	24" X 45"	7.50	1	--	--	2	1	
216	R1-1	30" X 30"	5.18	1	--	--	1	1	
217	J13-1	24" X 45"	7.50	1	--	--	2	1	
218	J13-1	24" X 45"	7.50	1	--	--	2	1	
219	W1-2L	30" X 30"	6.25	1	--	--	1	1	
220			--	--	--	--	--	--	EXISTING TO REMAIN
221			--	--	--	--	--	--	EXISTING TO REMAIN
222	J4-1	24" X 36"	6.00	1	--	--	2	1	
	SUBTOTAL		161.11	18	5	--	29	21	
	TOTAL		684.09	81	14	1	142	93	

ALL ITEMS ARE CATEGORY 0010 UNLESS OTHERWISE SPECIFIED.

TRAFFIC CONTROL

LOCATION	STAGE	DAYS	DRUMS	643.0300 TRAFFIC CONTROL DRUMS (DAY)	BARRICADES TYPE III	643.0420 TRAFFIC CONTROL BARRICADES TYPE III (DAY)	649.2100 TEMPORARY RAISED PAVEMENT MARKERS (EACH)	WARNING LIGHTS TYPE A	643.0705 TRAFFIC CONTROL WARNING LIGHTS TYPE A (DAY)	WARNING LIGHTS TYPE C	643.0715 TRAFFIC CONTROL WARNING LIGHTS TYPE C (DAY)	ARROW BOARDS	643.0800 TRAFFIC CONTROL ARROW BOARDS (DAY)	SIGNS	643.0900 TRAFFIC CONTROL SIGNS (DAY)
USH 10	-	79	106	8,374	16	1,264	--	16	1,264	--	--	--	--	66	5,214
BOX CULVERT	1	32	40	1,280	2	64	--	4	128	6	192	--	--	9	288
BOX CULVERT	2	35	99	3,465	4	140	40	8	280	40	1,400	1	33	13	455
		TOTAL		13,119		1468	40	28	1,672	46	1,592		33		7,932

PAVEMENT MARKING

LOCATION	STATION	-	STATION	STAGE	646.0106 PAVEMENT MARKING EPOXY 4-INCH WHITE (LF)	12.5 FT SKIPS (LF)	YELLOW (LF)	646.0116 PAVEMENT MARKING EPOXY 6-INCH WHITE (LF)	646.0126 PAVEMENT MARKING EPOXY 8-INCH WHITE (LF)	646.0406 PAVEMENT MARKING SAME DAY EPOXY 4-INCH YELLOW (LF)	647.0566 PAVEMENT MARKING STOP LINE EPOXY 18-INCH WHITE (LF)	649.0100 TEMPORARY PAVEMENT MARKING 4-INCH (LF)	649.0400 TEMPORARY PAVEMENT MARKING REMOVABLE TAPE 4-INCH WHITE (LF)	YELLOW (LF)
USH 10	48+19 RT	-	68+94 RT	-	2,098	18	--	--	--	--	--	--	--	--
USH 10	49+05 RT	-	51+32 RT	-	--	--	273	--	--	--	--	--	--	--
USH 10	49+96 LT	-	53+76 LT	-	--	--	177	--	--	--	36	--	--	--
USH 10	50+33	-	53+76	-	--	--	--	--	467	--	--	--	--	--
USH 10	50+12	-	508+03	-	--	--	--	--	--	68,000	--	136,000	--	--
USH 10	50+91 LT	-	68+82 LT	-	1,787	--	--	--	--	--	--	--	--	--
USH 10	69+88 RT	-	109+24 RT	-	3,905	--	--	--	--	--	--	--	--	--
USH 10	70+15 LT	-	108+97 LT	-	3,864	--	--	--	--	--	--	--	--	--
USH 10	70+15 LT	-	71+35 LT	-	--	--	--	--	120	--	--	--	--	--
USH 10	109+89 LT	-	121+46 LT	-	1,106	--	--	--	--	--	--	--	--	--
USH 10	110+31 RT	-	121+06 RT	-	1,042	--	--	--	--	--	--	--	--	--
USH 10	121+85 RT	-	185+84 RT	-	6,281	--	--	--	--	--	--	--	--	--
USH 10	122+32 LT	-	185+00 LT	-	6,216	--	--	--	--	--	--	--	--	--
USH 10	186+22 LT	-	195+42 LT	-	762	--	--	--	--	--	--	--	--	--
USH 10	187+12 RT	-	194+43 RT	-	708	--	--	--	--	--	--	--	--	--
USH 10	196+65 LT	-	259+15 LT	-	6,209	--	--	--	--	--	--	--	--	--
USH 10	196+71 RT	-	259+58 RT	-	6,227	--	--	--	--	--	--	--	--	--
USH 10	260+15 LT	-	272+41 LT	-	1,164	--	--	--	--	--	--	--	--	--
USH 10	260+93 RT	-	271+83 RT	-	1,036	--	--	--	--	--	--	--	--	--
USH 10	272+94 RT	-	334+47 RT	-	6,004	--	--	--	--	--	--	--	--	--
USH 10	273+48 LT	-	333+53 LT		5,971	--	--	--	--	--	--	--	--	--
USH 10	317+71 LT	-	359+47 LT	-	--	1,103	--	--	--	--	--	--	6,400	5,200
USH 10	334+75 LT	-	453+48 LT	-	10,685	--	--	--	--	--	--	--	--	--
USH 10	335+53 RT	-	501+75 RT	-	13,574	--	--	--	--	--	--	--	--	--
USH 10	353+38	-	362+44	-	--	--	--	1,820	--	--	--	--	--	--
USH 10	454+35 LT	-	508+03 LT	-	5,290	--	--	--	--	--	--	--	--	--
USH 10	498+95 RT	-	501+75 RT	-	--	--	--	--	280	--	--	--	--	--
USH 10	503+04 RT	-	508+03 RT		501	--	--	--	--	--	--	--	--	--
CTH DD	8+91"E"	-	9+51"E"	-	60	--	62	--	--	--	--	--	--	--
CTH DD	10+58"E"	-	11+07"E"	-	49	--	58	--	--	--	--	--	--	--
CTH D	8+89"H"	-	9+54"H"	-	65	--	62	--	--	--	--	--	--	--
			TOTAL		84,604	1,121	632	1,820	867	68,000	36	136,000	6,400	5,200
						86,357							11,600	

ALL ITEMS ARE CATEGORY 0010 UNLESS OTHERWISE SPECIFIED.

3

LOCATING NO-PASSING ZONES

PROJECT	648.0100 LOCATING NO-PASSING ZONES (MI)
1530-07-62	7.25
TOTAL	7.25

CONSTRUCTION STAKING

LOCATION	STATION	-	STATION	650.6000 CONSTRUCTION STAKING PIPE CULVERTS (EACH)	650.5500 CONSTRUCTION STAKING CURB GUTTER AND CURB & GUTTER (LF)	650.6500 CONSTRUCTION STAKING STRUCTURE LAYOUT (LS)	650.8000 CONSTRUCTION STAKING RESURFACING REFERENCE (LF)	650.9910 CONSTRUCTION STAKING SUPPLEMENTAL CONTROL (PROJECT) (LS)
USH 10	50+12.00	-	508+03.00	1	1527	1	44600	1
TOTAL				1	1527	1	44600	1

ASPHALT PAVING ITEMS

PROJECT	SPV.0105.02 MATERIAL TRANSFER VEHICLE (LS)	SPV.0105.03 MILLING AND REMOVING TEMPORARY JOINT (LS)
1530-07-62	1	1
TOTAL	1	1

SAWING ITEMS

LOCATION	STATION	-	STATION	OFFSET	690.0150 SAWING ASPHALT (LF)	690.0250 SAWING CONCRETE (LF)	REMARKS
USH 10	50+12.	-	-	BOP	144	--	
USH 10	49+00	-	49+20	BOP	23	--	
USH 10	113+02	-	114+08	RT	--	3	
USH 10	118+02	-	118+63	RT	--	3	
518TH AVE	10+87"B"	-	-	PL	28	--	
635TH ST	9+42"A"	-	-	PL	21	--	
610TH ST	9+34"C"	-	-	PL	26	--	
610TH ST	10+79"C"	-	-	PL	22	--	
490TH AVE	10+67"D"	-	-	PL	24	--	
490TH AVE	9+31"D"	-	-	PL	22	--	
USH 10	132+59	-	132+85	24' RT	26	--	PE
USH 10	140+95.	-	141+85.	CL	90	40	CPRC REPLACE
CTH DD	11+07"E"	-	-	PL	25	--	
CTH DD	8+91"E"	-	-	PL	28	--	
450TH AVE	8+93"F"	-		PL	23	--	
450TH AVE	10+95"G"	-	-	PL	24	--	
USH 10	235+35	-	235+53	24' LT	18	--	PE
USH 10	244+29	-	244+46	24' RT	17	--	PE
CTH D	8+89"H"	-	-	PL	24	--	
530TH ST	10+76"H"	-	-	PL	26	--	
410TH AVE	10+81"I"	-	-	PL	23	--	
410TH AVE	9+15"I"	-	-	PL	25	--	
510TH ST	9+25"J"	-	-	PL	27	--	
490TH ST	10+70"K"	-	-	PL	24	--	
490TH ST	9+37"L"	-	-	PL	26	--	
USH 10	359+30	-	359+48	38' RT	18	--	PE
400TH ST	10+57"M"	-	-	PL	20	--	
CTH A	9+30"N"	-	-	PL	30	--	
USH 10	73+37.	-	78+37.	10' LT/RT	1020	--	BASE REPAIR
USH 10	95+90.	-	100+90.	10' LT/RT	1020	--	BASE REPAIR
USH 10	106+78.	-	111+78.	10' LT/RT	1020	--	BASE REPAIR
USH 10	136+70.	-	141+70.	10' LT/RT	1020	--	BASE REPAIR
USH 10	222+30.	-	227+30.	10' LT/RT	1020	--	BASE REPAIR
USH 10	236+56.	-	241+56.	10' LT/RT	1020	--	BASE REPAIR
USH 10	249+95.	-	254+95.	10' LT/RT	1020	--	BASE REPAIR
USH 10	508+02.88	-	-	EOP	38	--	
			TOTAL		7982	46	

3

ALL ITEMS ARE CATEGORY 0010 UNLESS OTHERWISE SPECIFIED.

NOTE: WISDOT ELECTRICIANS TO INSTALL RED FLASHING BEACON AND ANCILLARY ELECTRICAL ITEMS TO SUPPLEMENT THE STOP SIGN ON USH 10 AT USH 63. ALLOW WISDOT 3 DAYS TO PLACE CONDUIT UNDER THE RIGHT TURN LANE AFTER MILLING OPERATIONS ARE COMPLETE AND BEFORE ASPHALT IS PLACED.

LEGEND

RCG	REMOVE CURB AND GUTTER
C636	CONCRETE CURB AND GUTTER 6-INCH SLOPED 36-INCH TYPE D

CURVE 1
PI = STA. 51+45.13
DELTA = 25°02'40"
D = 10°25'03"
T = 122.16'
L = 240.41'
R = 550.00'
SE = NC
RO = NC
PC = STA. 50+22.98
PT = STA. 52+63.39

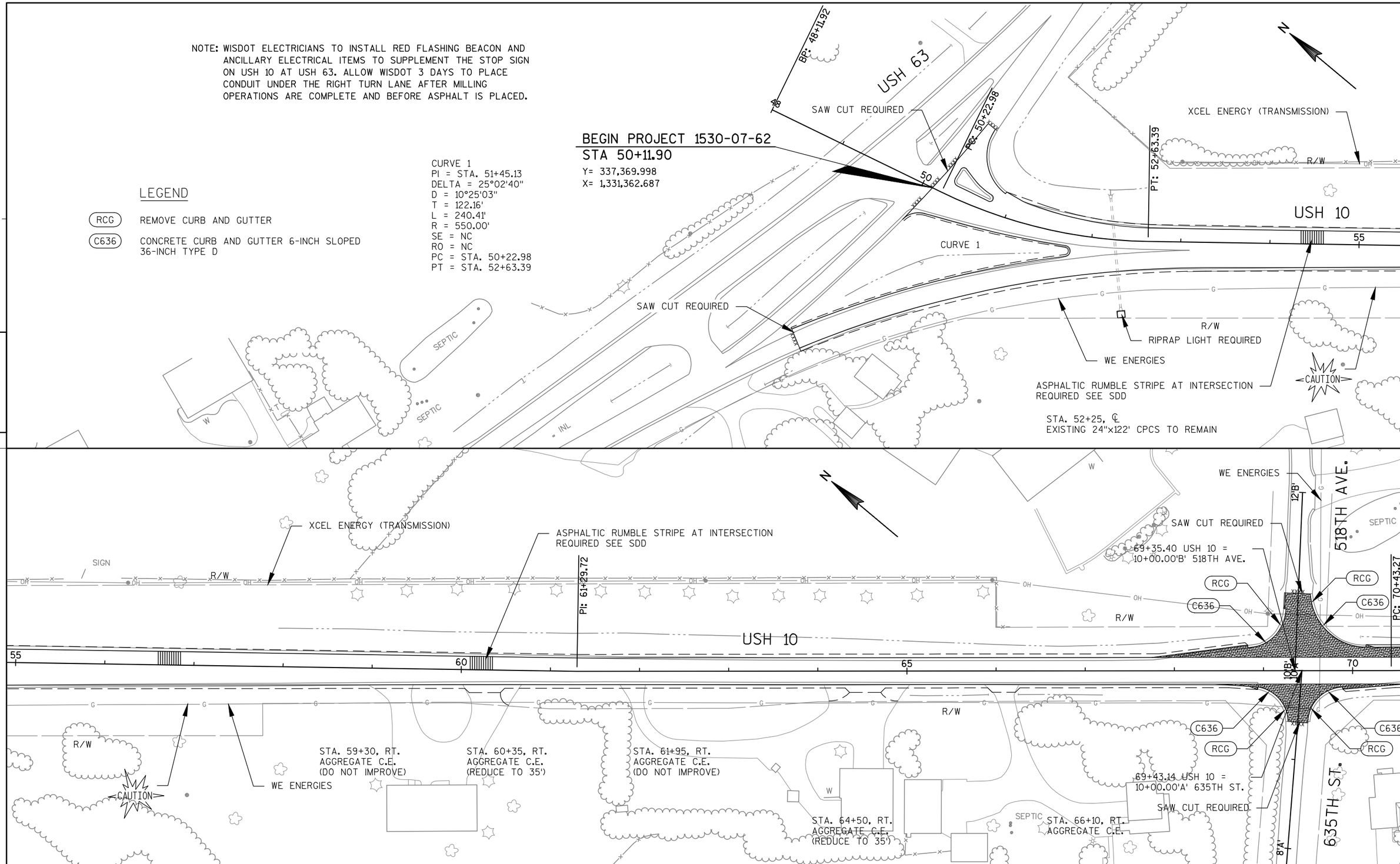

PROJECT NO:1530-07-62	HWY:USH 10	COUNTY:PIERCE	PLAN SHEET	SHEET 90	E

FILE NAME : X:\23046-80\10024\TECH\CADD\DRAWINGS\050201_PN.DWG PLOT DATE : 4/30/2013 8:45 AM PLOT BY : JEFF BREU PLOT NAME : PLOT SCALE : 1" = 100'_XREF

WISDOT/CADDS SHEET 44

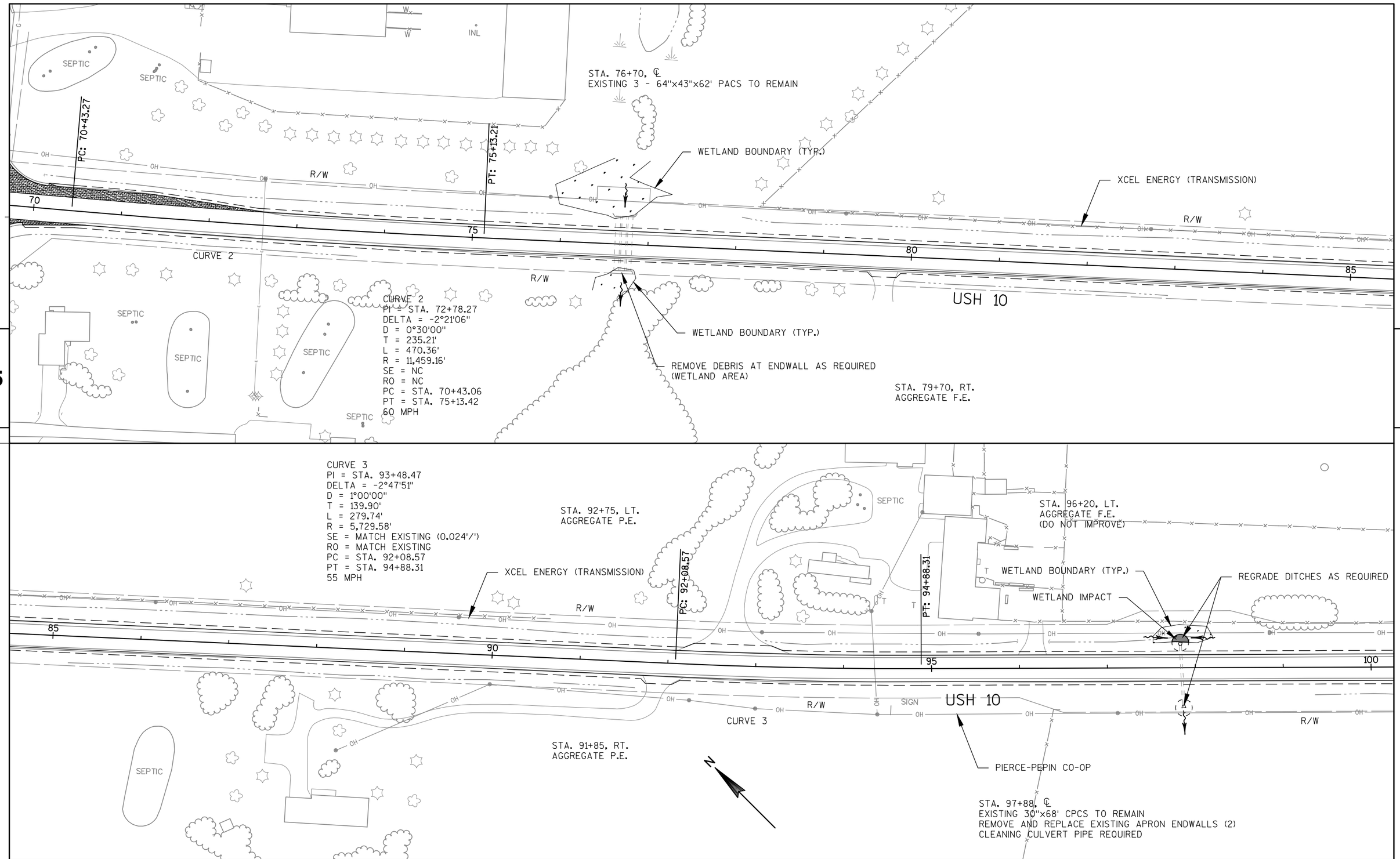

PROJECT NO:1530-07-62	HWY: USH 10	COUNTY: PIERCE	PLAN SHEET	SHEET 91	E

STA. 10+55'C', ℄ 610TH STREET
EXISTING 30"x68' CPRC w/APRON ENDWALLS TO REMAIN
CLEANING CULVERT PIPE REQUIRED

XCEL ENERGY (TRANSMISSION)

SAW CUT REQUIRED

RCG

C636

REGRADE DITCHES AS REQUIRED

R/W

610TH ST.

STA. 114+05 - 114+58, RT.
REMOVE GUARDRAIL, 53 LF

STA. 113+00 - 113+53, RT.
INSTALL MGS GUARDRAIL ENERGY ABSORBING TERMINAL

STA. 113+53 - 114+03, RT.
INSTALL MGS GUARDRAIL 3, 50 LF

STA. 114+03 - 114+56, RT.
INSTALL MGS GUARDRAIL ENERGY ABSORBING TERMINAL

STA. 111+60, LT.
AGGREGATE P.E.

PC: 113+57.54

CURVE 4

100 105 110 115

WETLAND IMPACT

WETLAND BOUNDARY (TYP.)

PIERCE-PEPIN CO-OP

USH 10

C436

109+66.75 USH 10 =
10+00.00'C' 610TH ST.

SLOPE INTERCEPT

STA. 113+80, RT.
AGGREGATE C.E.

STA. 114+76, RT.
AGGREGATE C.E.

EXTEND CURB & GUTTER TO
REDUCE EXISTING PE

SAW CUT REQUIRED

STA. 108+65, ℄
EXISTING 30"x66' CPRC w/APRON ENDWALLS TO REMAIN
CLEANING CULVERT PIPE REQUIRED

LEGEND

- RCG — REMOVE CURB AND GUTTER
- C636 — CONCRETE CURB AND GUTTER 6-INCH SLOPED 36-INCH TYPE D
- C436 — CONCRETE CURB AND GUTTER 4-INCH SLOPED 36-INCH TYPE D

SEPTIC

CURVE 4
PI = STA. 116+13.42
DELTA = 10°12'31"
D = 2°00'00"
T = 255.89'
L = 510.43'
R = 2,864.79'
SE = MATCH EXISTING (0.042'/')
RO = MATCH EXISTING
PC = STA. 113+57.53
PT = STA. 118+67.97
55 MPH

CURVE 5
PI = STA. 125+40.63
DELTA = -9°04'40"
D = 2°00'00"
T = 227.42'
L = 453.89'
R = 2,864.79'
SE = MATCH EXISTING (0.042'/')
RO = MATCH EXISTING
PC = STA. 123+13.21
PT = STA. 127+67.10
55 MPH

490TH AVE.

PT: 118+67.97

PC: 123+13.22

PT: 127+67.10

XCEL ENERGY (TRANSMISSION)

MH

CURVE 4

CURVE 5

SLOPE INTERCEPT

STA. 116+72, RT.
AGGREGATE C.E.

STA. 119+55, RT.
AGGREGATE C.E.

120 125 130

121+70.33 USH 10 =
10+00.00'D' 490TH AVE.

STA. 122+80, ℄
EXISTING 30"x66' CPCS w/APRON ENDWALLS TO REMAIN

STA. 129+50, ℄
EXISTING 24"x66' CPRC w/APRON ENDWALLS TO REMAIN
CLEANING CULVERT PIPE REQUIRED

STA. 114+05 - 114+57, LT.
REMOVE GUARDRAIL, 52 LF

STA. 114+96 - 115+49, RT.
INSTALL MGS GUARDRAIL ENERGY ABSORBING TERMINAL

STA. 115+49 - 115+99, RT.
INSTALL MGS GUARDRAIL 3, 50 LF

STA. 115+99 - 116+52, RT.
INSTALL MGS GUARDRAIL ENERGY ABSORBING TERMINAL

STA. 115+03 - 116+43, RT.
REMOVE GUARDRAIL, 140 LF

STA. 116+92 - 117+45, RT.
INSTALL MGS GUARDRAIL ENERGY ABSORBING TERMINAL

STA. 117+45 - 118+08, RT.
INSTALL MGS GUARDRAIL 3, 62.5 LF

STA. 118+08 - 118+61, RT.
INSTALL MGS GUARDRAIL ENERGY ABSORBING TERMINAL

PROJECT NO: 1530-07-62	HWY: USH 10	COUNTY: PIERCE	PLAN SHEET	SHEET 92	E

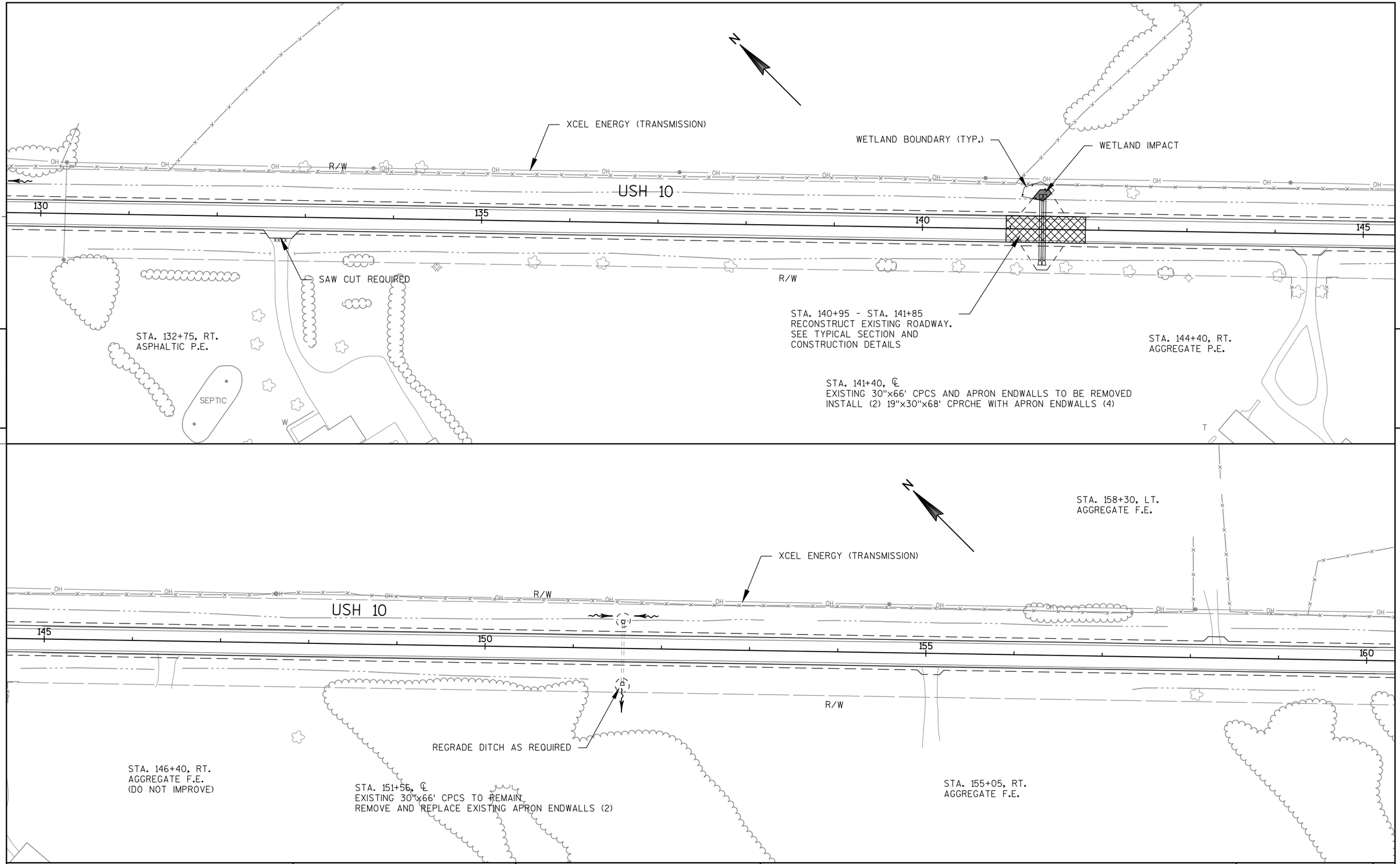

PROJECT NO:1530-07-62	HWY: USH 10	COUNTY: PIERCE	PLAN SHEET	SHEET 93	E

STA. 161+11, ℄
EXISTING 30"x66' CPCS TO REMAIN
REMOVE AND REPLACE EXISTING APRON ENDWALLS (2)

WETLAND IMPACT

WETLAND BOUNDARY (TYP.)

CAUTION

KOCH PIPELINE COMPANY

XCEL ENERGY (TRANSMISSION)

STA. 172+30, LT.
AGGREGATE P.E.

PC: 171+16.19

PT: 174+24.94

CURVE 6

SIGN

USH 10

R/W

160 165 170 175

RIPRAP MEDIUM REQUIRED

PIPE

PIERCE-PEPIN CO-OP

CAUTION

STA. 162+35, RT.
AGGREGATE P.E.

POOL

CURVE 6
PI = STA. 172+70.72
DELTA = 6°10'30"
D = 2°00'00"
T = 154.52'
L = 308.75'
R = 2,864.79'
SE = MATCH EXISTING (0.042'/')
RO = MATCH EXISTING'
PC = STA. 171+16.19
PT = STA. 174+24.94
55 MPH

5

5

LEGEND

RCG — REMOVE CURB AND GUTTER

C636 — CONCRETE CURB AND GUTTER 6-INCH SLOPED 36-INCH TYPE D

CURVE 7
PI = STA. 194+68.66
DELTA = -6°40'56"
D = 0°18'28"
T = 1,087.11'
L = 2,171.75'
R = 18,621.13'
SE = NC
RO = NC
PC = STA. 183+81.55
PT = STA. 205+53.30
60 MPH

CTH DD

PIERCE-PEPIN CO-OP

SAW CUT REQUIRED

RCG

C636

186+03.41 USH 10 =
10+00.00'E' CTH DD

XCEL ENERGY (TRANSMISSION)

WETLAND BOUNDARY (TYP.)

PC: 183+81.55

USH 10

R/W

175 180 185 190

CURVE 7

WETLAND IMPACT

WETLAND BOUNDARY (TYP.)

PIERCE-PEPIN CO-OP

STA. 183+08, ℄
EXISTING 30"x66' CPRC w/APRON ENDWALL ON NORTH END TO REMAIN
REMOVE SOUTH ENDWALL
RELAY 16' OF CULVERT PIPE SALVAGED 30-INCH ON SOUTH END TO REPAIR JOINT
INSTALL APRON ENDWALL ON SOUTH END (1)
CLEANING CULVERT PIPE REQUIRED

PROJECT NO: 1530-07-62	HWY: USH 10	COUNTY: PIERCE	PLAN SHEET	SHEET 94	E

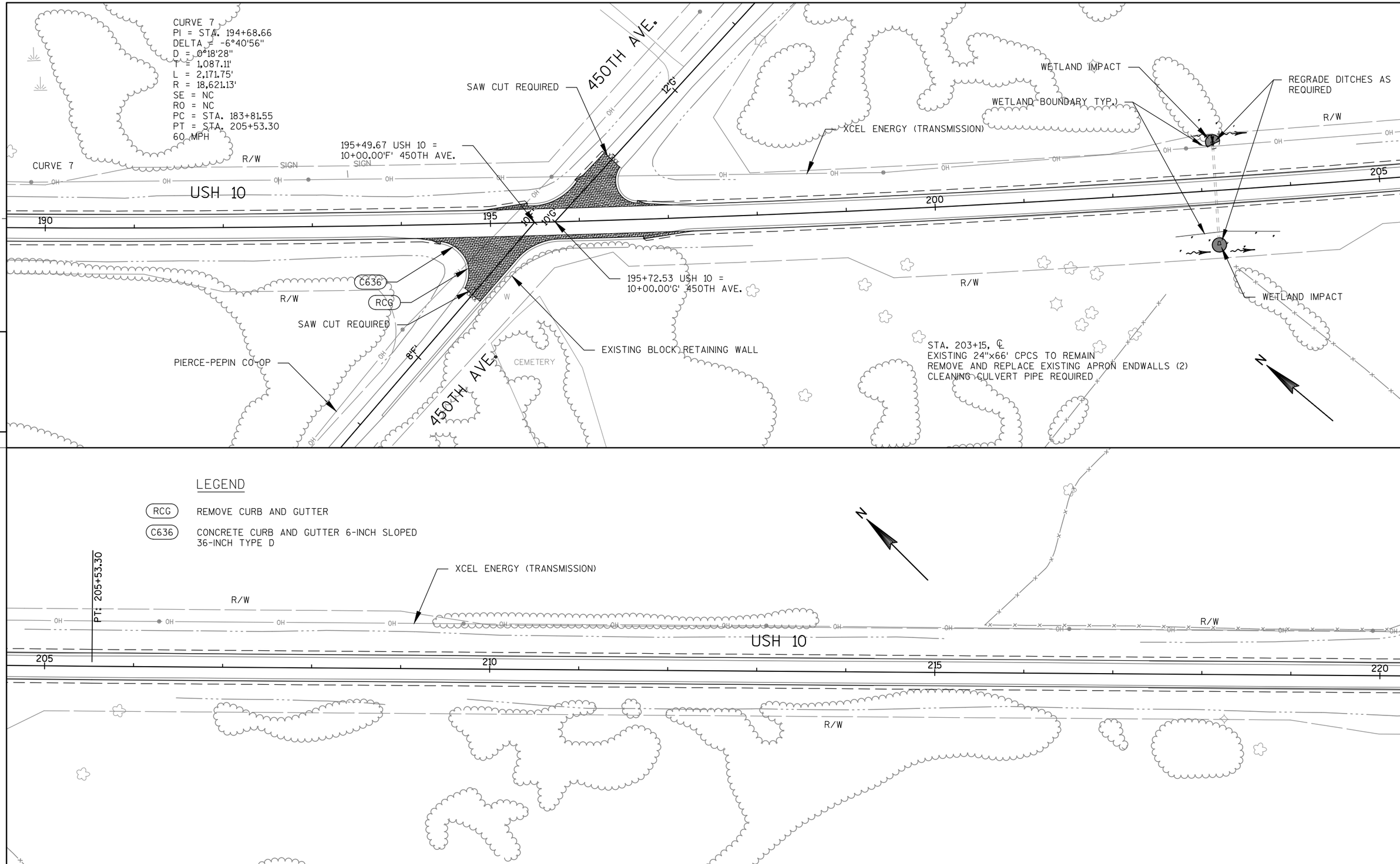

PROJECT NO:1530-07-62	HWY:USH 10	COUNTY:PIERCE	PLAN SHEET	SHEET 95	E

FILE NAME : X:\23046-80\10024\TECH\CADD\DRAWINGS\050201_PN.DWG PLOT DATE : 4/30/2013 8:48 AM PLOT BY : JEFF BREU PLOT NAME : PLOT SCALE : 1" = 100'_XREF

WISDOT/CADDS SHEET 44

STA. 220+70, LT.
AGGREGATE P.E.

STA. 222+55, ℄
STRUCTURE C-47-48
EXISTING 6'x6'x66' BOX CULVERT BOX TO REMAIN
CLEAR DEBRIS AT INLET

STA. 226+70, ℄
EXISTING 36"x66' CPRC w/APRON ENDWALLS TO REMAIN
CLEANING CULVERT PIPE REQUIRED

XCEL ENERGY (TRANSMISSION)

R/W

USH 10

220 225 230 235

SIGN

R/W

5

STA. 220+70, RT.
AGGREGATE F.E.

STA. 234+05, RT.
AGGREGATE F.E.

5

STA. 235+40, LT.
ASPHALTIC P.E.

POOL

STA. 245+60, LT.
AGGREGATE F.E.
(DO NOT IMPROVE)

XCEL ENERGY (TRANSMISSION)

SAW CUT REQUIRED

R/W

USH 10

235 240 245 250

SAW CUT REQUIRED

REGRADE DITCHES AS REQUIRED

PIERCE-PEPIN CO-OP

R/W

RUINS

STA. 238+10, ℄
EXISTING 30"x66' CPRC w/APRON ENDWALLS TO REMAIN
CLEANING CULVERT PIPE REQUIRED
REMOVE AND REPLACE EXISTING APRON ENDWALLS (2)

STA. 244+30, RT.
ASPHALTIC P.E.

STA. 249+50, RT.
AGGREGATE F.E.
(DO NOT IMPROVE)

PROJECT NO: 1530-07-62	HWY: USH 10	COUNTY: PIERCE	PLAN SHEET	SHEET 96	E

LEGEND

RCG — REMOVE CURB AND GUTTER

C636 — CONCRETE CURB AND GUTTER 6-INCH SLOPED 36-INCH TYPE D

530TH ST.

12"H

SAW CUT REQUIRED

XCEL ENERGY (TRANSMISSION)

259+88.49 USH 10 =
10+00.00'H' 530TH ST.

R/W

OH

USH 10

250 255 260 265

10"H

R/W

SAW CUT REQUIRED

8"H

CTH D.

STA. 252+12, ℄
EXISTING 3.5'x5'x66' BOX CULVERT TO REMAIN

5

5

STA. 10+80'I', ℄ 410TH AVENUE
EXISTING 30"x84' CPCS w/APRON ENDWALLS TO REMAIN

410TH AVE.

SAW CUT REQUIRED

REGRADE DITCH AS REQUIRED

RCG

C636

12"

PC: 266+15.53

PT: 269+95.44

R/W

USH 10

265 270 275 280

10"

ASPHALTIC FLUME REQUIRED

XCEL ENERGY (TRANSMISSION)

STA. 279+60, ℄
EXISTING 30"x66' CPCS TO REMAIN

CURVE 8

CURVE 8
PI = STA. 268+05.51
DELTA = 2°31'58"
D = 0°40'00"
T = 189.98'
L = 379.81'
R = 8,594.37'
SE = MATCH EXISTING (0.020'/')
RO = MATCH EXISTING
PC = STA. 266+15.53
PT = STA. 269+95.44
60 MPH

272+68.27 USH 10 =
10+00.00'I' 410TH AVE.

8"

410TH AVE.

STA. 274+07, ℄
EXISTING 30"x68' CPCS TO REMAIN
REMOVE AND REPLACE EXISTING APRON ENDWALLS (2)
CLEANING CULVERT PIPE REQUIRED

PROJECT NO: 1530-07-62	HWY: USH 10	COUNTY: PIERCE	PLAN SHEET	SHEET 97	E

CURVE 9
PI = STA. 295+14.90
DELTA = -40°50'33"
D = 4°00'00"
T = 533.31'
L = 1,021.06'
R = 1,432.39'
SE = MATCH EXISTING (0.060'/')
RO = MATCH EXISTING
PC = STA. 289+81.60
PT = STA. 300+02.66
60 MPH

STA. 280+35, LT.
AGGREGATE F.E.

XCEL ENERGY (TRANSMISSION)

PC: 289+81.60

R/W

USH 10

CURVE 9

280 285 290 295

R/W

REGRADE DITCHES AS REQUIRED

5

STA. 280+50, RT.
AGGREGATE F.E.

STA. 294+50, ℄
EXISTING 36"x66' CPCS TO REMAIN
REMOVE AND REPLACE EXISTING APRON ENDWALLS (2)

5

STA. 306+50 - 307+00, LT.
REMOVE GUARDRAIL, 50' LF

STA. 306+00 - 307+00, LT
INSTALL STEEL PLATE BEAM GUARD CLASS A, 100 LF

STA. 305+50 - 306+00, LT.
INSTALL STEEL PLATE BEAM GUARD ENERGY ABSORBING TERMINAL

STA. 307+00 - 307+75, LT.
ADJUST STEEL PLATE BEAM GUARD

STA. 307+75 - 308+12 LT.
REMOVE GUARDRAIL, 37.5' LF

STA. 307+75 - 308+25, LT
INSTALL STEEL PLATE BEAM GUARD CLASS A, 50 LF

STA. 308+25 - 308+75, LT.
INSTALL STEEL PLATE BEAM GUARD ENERGY ABSORBING TERMINAL

295+98.40 USH 10 =
10+00.00'J' 510TH ST.

PT: 300+02.66

SLOPE INTERCEPT

SLOPE INTERCEPT

CURVE 9

R/W

USH 10

295 300 305 310

10'J'

R/W

R/W

SAW CUT REQUIRED

XCEL ENERGY (TRANSMISSION)

510TH ST

STA. 306+41 - 307+03, RT.
REMOVE GUARDRAIL, 62.5' LF

STA. 306+53 - 307+03, RT
INSTALL STEEL PLATE BEAM GUARD CLASS A, 50 LF

STA. 306+03 - 306+53, RT.
INSTALL STEEL PLATE BEAM GUARD ENERGY ABSORBING TERMINAL

STA. 307+03 - 314+80, RT.
ADJUST STEEL PLATE BEAM GUARD

SLOPE INTERCEPT

STA. 307+38, ℄
EXISTING 3 1/2x6'x66' BOX CULVERT TO REMAIN

PROJECT NO:1530-07-62	HWY: USH 10	COUNTY: PIERCE	PLAN SHEET	SHEET 98	E

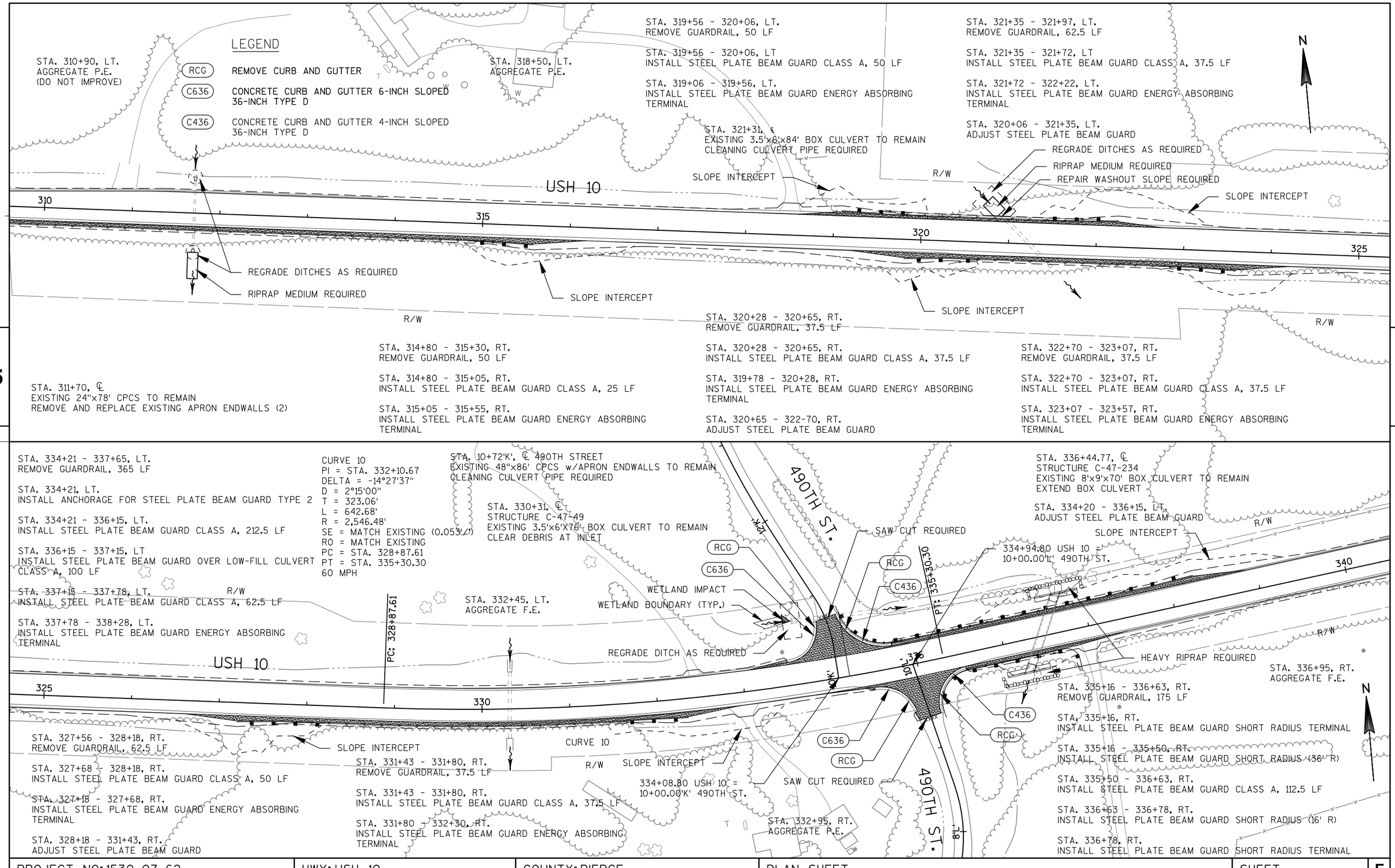

PROJECT NO: 1530-07-62	HWY: USH 10	COUNTY: PIERCE	PLAN SHEET	SHEET 99 E

STA. 345+26 - 346+64, LT.
REMOVE GUARDRAIL, 137.5 LF

STA. 344+90 - 345+43, LT.
INSTALL MGS GUARDRAIL ENERGY ABSORBING TERMINAL

STA. 345+43 - 346+56, LT.
INSTALL MGS GUARDRAIL 3 L, 112.5 LF

STA. 346+56 - 347+09, LT.
INSTALL MGS GUARDRAIL ENERGY ABSORBING TERMINAL

STA. 342+48, ℄
EXISTING 24"x72' CPCS TO REMAIN
EXISTING APRON ENDWALL LT TO REMAIN

REGRADE DITCHES AS REQUIRED

PC: 342+26.18

SLOPE INTERCEPT

CURVE 11

PT: 347+84.19

USH 10

R/W

340

RIPRAP MEDIUM REQUIRED

345

350

355

CURVE 12

PC: 353+38.40

SLOPE INTERCEPT

CURVE 11
PI = STA. 345+06.57
DELTA = -13°57'01"
D = 2°30'00"
T = 280.39'
L = 558.01'
R = 2,291.83'
SE = MATCH EXISTING (0.051'/')
RO = MATCH EXISTING
PC = STA. 342+26.18
PT = STA. 347+84.19
60 MPH

CURVE 12
PI = STA. 358+28.56
DELTA = 54°20'34"
D = 6°00'00"
T = 490.16'
L = 905.71'
R = 954.93'
SE = 0.080'/' (ADJUST)
RO = 204'(PC) 248'(PT)
SE = 255' (PC)
PC = STA. 353+38.40
PT = STA. 362+44.11
50 MPH

STA. 354+36 - 354+73, RT.
REMOVE GUARDRAIL, 37.5 LF

STA. 353+98 - 354+73, RT.
INSTALL STEEL PLATE BEAM GUARD CLASS A, 75 LF

STA. 353+48 - 353+98, RT.
INSTALL STEEL PLATE BEAM GUARD ENERGY ABSORBING TERMINAL

STA. 342+00, RT.
INSTALL 24" AEW SLOPED SIDE DRAINS 6:1
INSTALL 24" CPCS, 37 LF AT 0.50% (MIN.)

STA. 342+37, RT
REMOVE EXISTING APRON ENDWALL RT
INSTALL INLET MEDIAN 2 GRATE

STA. 345+50, RT.
AGGREGATE F.E.

STA. 346+16, ℄
EXISTING 10"x10'x82' BOX CULVERT TO REMAIN

STA. 356+37, ℄
EXISTING 72"x78' CPCS TO REMAIN

STA. 358+40, LT.
AGGREGATE P.E.

REGRADE DITCH AS REQUIRED

STA. 357+45, ℄
STRUCTURE C-47-50
EXISTING 6'X6'x78' BOX CULVERT TO REMAIN
CLEAR DEBRIS AT INLET

STA. 365+45 - 365+83, RT.
REMOVE GUARDRAIL, 37.5 LF

STA. 365+45 - 368+47, RT.
INSTALL STEEL PLATE BEAM GUARD CLASS A, 302 LF

STA. 368+27 - 368+65, LT.
REMOVE GUARDRAIL, 62.5 LF

STA. 368+65 - 369+27, LT.
INSTALL STEEL PLATE BEAM GUARD CLASS A, 62.5 LF

STA. 368+15 - 368+65, LT.
INSTALL STEEL PLATE BEAM GUARD ENERGY ABSORBING TERMINAL

PT: 362+44.11

PC: 364+64.91

USH 10

355

360

365

370

CURVE 12

STA. 359+40, RT.
ASPHALTIC P.E.

WETLAND BOUNDARY (TYP.)

STA. 360+10, RT.
AGGREGATE F.E.
(DO NOT IMPROVE)

STA. 368+10 - 368+47, RT.
REMOVE GUARDRAIL, 37.5 LF

CURVE 13
PI = STA. 369+00.66
DELTA = -25°42'18"
D = 3°00'00"
T = 435.75'
L = 856.84'
R = 1,909.86'
SE = MATCH EXISING (0.050'/')
RO = MATCH EXISTING
PC = STA. 364+64.91
PT = STA. 373+21.75
60 MPH

CURVE 13

SLOPE INTERCEPT

SLOPE INTERCEPT

STA. 358+87 - 359+29, RT.
REMOVE GUARDRAIL, 50 LF

STA. 358+87 - 359+12, RT.
INSTALL STEEL PLATE BEAM GUARD CLASS A, 25 LF

STA. 359+12 - 359+29, RT.
INSTALL STEEL PLATE BEAM GUARD SHORT RADIUS (8.0' R)

STA. 359+29, RT.
INSTALL STEEL PLATE BEAM GUARD SHORT RADIUS TERMINAL

STA. 357+73 - 358+87 RT.
ADJUST STEEL PLATE BEAM GUARD

STA. 359+49 - 359+91, RT.
REMOVE GUARDRAIL, 50 LF

STA. 359+49, RT.
INSTALL STEEL PLATE BEAM GUARD SHORT RADIUS TERMINAL

STA. 359+49 - 359+65, RT.
INSTALL STEEL PLATE BEAM GUARD SHORT RADIUS (16' R)

STA. 359+65 - 360+78, RT.
INSTALL STEEL PLATE BEAM GUARD CLASS A, 112.5 LF

STA. 360+28 - 360+78, RT.
REMOVE GUARDRAIL, 50 LF

STA. 360+78 - 365+43, RT.
ADJUST STEEL PLATE BEAM GUARD

PROJECT NO: 1530-07-62	HWY: USH 10	COUNTY: PIERCE	PLAN SHEET	SHEET 100	E

STA. 370+86 - 371+23, LT.
REMOVE GUARDRAIL, 37.5 LF

STA. 370+86 - 376+00, LT.
INSTALL STEEL PLATE BEAM GUARD CLASS A, 512.5 LF

STA. 368+69 - 370+86, LT.
ADJUST STEEL PLATE BEAM GUARD

CURVE 13
PI = STA. 369+00.66
DELTA = -25°42'18"
D = 3°00'00"
T = 435.75'
L = 856.84'
R = 1,909.86'
SE = MATCH EXISTING (0.050'/')
RO = MATCH EXISTING
PC = STA. 364+64.91
PT = STA. 373+21.75
60 MPH

STA. 375+50 - 376+00, LT.
REMOVE GUARDRAIL, 50 LF

STA. 376+00 - 378+28, LT.
ADJUST STEEL PLATE BEAM GUARD

STA. 378+28 - 378+65, LT.
REMOVE GUARDRAIL, 37.5 LF

STA. 378+28 - 379+03, LT.
INSTALL STEEL PLATE BEAM GUARD CLASS A, 75 LF

STA. 379+03 - 379+53, LT.
INSTALL STEEL PLATE BEAM GUARD ENERGY ABSORBING TERMINAL

STA. 381+59 - 382+09, LT.
REMOVE GUARDRAIL, 50 LF

STA. 381+59 - 382+09, LT.
INSTALL STEEL PLATE BEAM GUARD CLASS A, 50 LF

STA. 381+44 - 381+59, LT.
INSTALL STEEL PLATE BEAM GUARD SHORT RADIUS (16' R)

STA. 381+44, LT.
INSTALL STEEL PLATE BEAM GUARD SHORT RADIUS TERMINAL

STA. 370+64, ℄
EXISTING 10'x10'x84' BOX CULVERT TO REMAIN

STA. 376+78, ℄
EXISTING 10'x10'x84' BOX CULVERT TO REMAIN

STA. 381+20, LT.
AGGREGATE C.E.

R/W

PT: 373+21.75

SLOPE INTERCEPT

SLOPE INTERCEPT

SLOPE INTERCEPT

SLOPE INTERCEPT

CURVE 13

USH 10

370

375

380

385

STA. 381+45, RT.
AGGREGATE F.E.

R/W

STA. 382+28 - 383+69, RT.
ADJUST STEEL PLATE BEAM GUARD

STA. 381+66 - 382+28, RT.
REMOVE GUARDRAIL, 62.5 LF

STA. 381+78 - 382+28, RT.
INSTALL STEEL PLATE BEAM GUARD CLASS A, 50 LF

STA. 381+60 - 381+78, RT.
INSTALL STEEL PLATE BEAM GUARD SHORT RADIUS (16' R)

STA. 381+60, RT.
INSTALL STEEL PLATE BEAM GUARD SHORT RADIUS TERMINAL

STA. 370+72 - 370+97, RT.
REMOVE GUARDRAIL, 25 LF

STA. 370+72 - 370+97, RT.
INSTALL STEEL PLATE BEAM GUARD CLASS A, 25 LF

STA. 370+97 - 371+03, RT.
INSTALL STEEL PLATE BEAM GUARD SHORT RADIUS (8')

STA. 371+03, RT.
INSTALL STEEL PLATE BEAM GUARD SHORT RADIUS TERMINAL

STA. 371+10, RT.
AGGREGATE P.E.

STA. 368+65 - 370+72, RT.
ADJUST STEEL PLATE BEAM GUARD

STA. 375+81 - 376+18, RT.
REMOVE GUARDRAIL, 37.5 LF

STA. 375+81 - 376+18, RT.
INSTALL STEEL PLATE BEAM GUARD CLASS A, 37.5 LF

STA. 375+31 - 375+81, RT.
INSTALL STEEL PLATE BEAM GUARD ENERGY ABSORBING TERMINAL

STA. 376+18 - 378+70, RT.
ADJUST STEEL PLATE BEAM GUARD

STA. 378+70 - 379+07, RT.
REMOVE GUARDRAIL, 37.5 LF

STA. 378+70 - 378+95, RT.
INSTALL STEEL PLATE BEAM GUARD CLASS A, 25 LF

STA. 378+95 - 379+45, RT.
INSTALL STEEL PLATE BEAM GUARD ENERGY ABSORBING TERMINAL

N

5

5

STA. 384+08, ℄
STRUCTURE B-47-80
EXISTING 4-73"x55"x84' PACS TO REMAIN
CLEAN DEBRIS AT INLET

R/W

STA. 382+09 - 412+65, LT.
ADJUST STEEL PLATE BEAM GUARD

CURVE 14
PI = STA. 397+80.77
DELTA = -23°20'12"
D = 2°30'00"
T = 473.29'
L = 933.46'
R = 2,291.83'
SE = MATCH EXISITNG (0.046'/')
RO = MATCH EXISTING
PC = STA. 393+07.48
PT = STA. 402+40.94
60 MPH

STA. 395+89 - 396+26, RT.
REMOVE GUARDRAIL, 37.5 LF

STA. 395+63 - 396+26, RT.
INSTALL STEEL PLATE BEAM GUARD CLASS A, 62.5 LF

STA. 395+13 - 395+63, RT.
INSTALL STEEL PLATE BEAM GUARD ENERGY ABSORBING TERMINAL

STA. 396+86 - 397+36, RT.
REMOVE GUARDRAIL, 50 LF

STA. 396+86 - 397+36, RT.
INSTALL STEEL PLATE BEAM GUARD CLASS A, 50 LF

STA. 397+36 - 397+86, RT.
INSTALL STEEL PLATE BEAM GUARD ENERGY ABSORBING TERMINAL

STA. 397+60, ℄
EXISTING 12'x7'x64' BOX CULVERT TO REMAIN

R/W

PC: 393+07.48

USH 10

CURVE 14

385

390

395

400

STA. 385+50, RT.
AGGREGATE C.E.
(DO NOT IMPROVE)

STA. 383+69 - 384+56, RT.
REMOVE GUARDRAIL, 87.5 LF

STA. 383+69 - 384+82, RT.
INSTALL STEEL PLATE BEAM GUARD CLASS A, 112.5 LF

STA. 384+82 - 385+32, RT.
INSTALL STEEL PLATE BEAM GUARD ENERGY ABSORBING TERMINAL

QUARRY

R/W

STA. 393+50, RT.
AGGREGATE C.E.

OH

OH

STA. 396+26 - 396+86, RT.
ADJUST STEEL PLATE BEAM GUARD

PROJECT NO: 1530-07-62	HWY: USH 10	COUNTY: PIERCE	PLAN SHEET	SHEET 101	E

STA. 412+65 - 413+02, LT.
REMOVE GUARDRAIL, 37.5 LF

STA. 412+65 - 413+02, LT.
INSTALL STEEL PLATE BEAM GUARD CLASS A, 37.5 LF

STA. 413+02 - 413+52, LT.
INSTALL STEEL PLATE BEAM GUARD ENERGY ABSORBING TERMINAL

N

R/W

PT: 402+40.94

CURVE 14

USH 10

PC: 411+76.10

SLOPE INTERCEPT

400 405 410 415

R/W

CURVE 15

CURVE 14
PI = STA. 397+80.77
DELTA = -23°20'12"
D = 2°30'00"
T = 473.29'
L = 933.46'
R = 2,291.83'
SE = MATCH EXISITNG (0.046'/')
RO = MATCH EXISTING
PC = STA. 393+07.48
PT = STA. 402+40.94
60 MPH

STA. 405+50, ℄
EXISTING 24"x72' CPCS w/APRON ENDWALLS TO REMAIN
CLEANING CULVERT PIPE REQUIRED

REGRADE DITCH AS REQUIRED

XCEL ENERGY (TRANSMISSION)

5

5

R/W

USH 10

420 425 440

PI: 425+73.71

N

CURVE 15

R/W

STA BACK = 426+00.00
STA AHEAD = 438+00.00

415

XCEL ENERGY (TRANSMISSION)

REGRADE DITCH AS REQUIRED

CURVE 15
PI = STA. 419+76.70
DELTA = 69°52'50"
D = 5°00'00"
T = 800.60'
L = 1397.61'
R = 1,145.92'
SE = MATCH EXISTING (0.060'/')
RO = MATCH EXISTING
PC = STA. 411+76.10
PT = STA. 425+73.71
55 MPH

STA. 415+60, ℄
EXISTING 24"x72' CPCS w/APRON ENDWALLS TO REMAIN
CLEANING CULVERT PIPE REQUIRED

STA. 438+38, ℄
EXISTING 36"x72' CPCS w/APRON ENDWALLS TO REMAIN
CLEANING CULVERT PIPE REQUIRED

PROJECT NO: 1530-07-62	HWY: USH 10	COUNTY: PIERCE	PLAN SHEET	SHEET 102	E

LEGEND

RCG — REMOVE CURB AND GUTTER

C636 — CONCRETE CURB AND GUTTER 6-INCH SLOPED 36-INCH TYPE D

STA. 452+50 - 453+03, RT.
INSTALL MGS GUARDRAIL ENERGY ABSORBING TERMINAL

STA. 453+03, RT. - 453+28, RT.
INSTALL MGS GUARDRAIL 3, 25 LF

STA. 453+28 - 454+41, RT.
INSTALL MGS GUARDRAIL 3L , 112.5 LF

STA. 454+41 - 454+94, RT.
INSTALL MGS GUARDRAIL ENERGY ABSORBING TERMINAL

WETLAND BOUNDARY (TYP.)

R/W

USH 10

400TH ST.

12'W

SAW CUT REQUIRED

RCG

C636

445

450

455

10'W

OH

SLOPE INTERCEPT

PIERCE-PEPIN CO-OP

STA. 452+10, RT.
AGGREGATE P.E.

453+81.34 USH 10 =
10+00.00'M' 400TH ST.

STA. 446+20, ℄
EXISTING 36"x76' CPCS TO REMAIN
REMOVE AND REPLACE EXISTING APRON ENDWALLS (2)

STA. 454+02, ℄
STRUCTURE C-47-51
EXISTING 6'x4.5'x76' BOX CULVERT TO REMAIN
CLEANING CULVERT PIPE REQUIRED

STA. 459+55, ℄
EXISTING 24"x68' CPCS TO REMAIN
EXISTING APRON ENDWALL RT TO REMAIN
REMOVE AND REPLACE EXISTING APRON ENDWALL LT (1)

REGRADE DITCH AS REQUIRED

STA. 468+20, LT.
AGGREGATE F.E.
(REDUCE TO 35')

STA. 469+25, LT.
AGGREGATE F.E.
(REMOVE ENTRANCE - GRADING DITCH
WITH RESTORATION REQUIRED)

PC: 471+27.33

460

465

470

CURVE 16

A/C

T

STA. 461+75, RT.
AGGREGATE P.E.

STA. 463+55, RT.
AGGREGATE P.E.

CURVE 16
PI = STA. 480+69.76
DELTA = 36°25'09"
D = 2°00'00"
T = 942.42'
L = 1,820.95'
R = 2,864.79'
SE = MATCH EXISTING (0.045'/')
RO = MATCH EXISTING
PC = STA. 471+27.33
PT = STA. 489+48.29
60 MPH

PROJECT NO: 1530-07-62	HWY: USH 10	COUNTY: PIERCE	PLAN SHEET	SHEET 103 E

FILE NAME : X:\23046-80\10024\TECH\CADD\DRAWINGS\050201_PN.DWG PLOT DATE : 4/30/2013 8:53 AM PLOT BY : JEFF BREU PLOT NAME : ---------- PLOT SCALE : 1" = 100'_XREF

WISDOT/CADDS SHEET 44

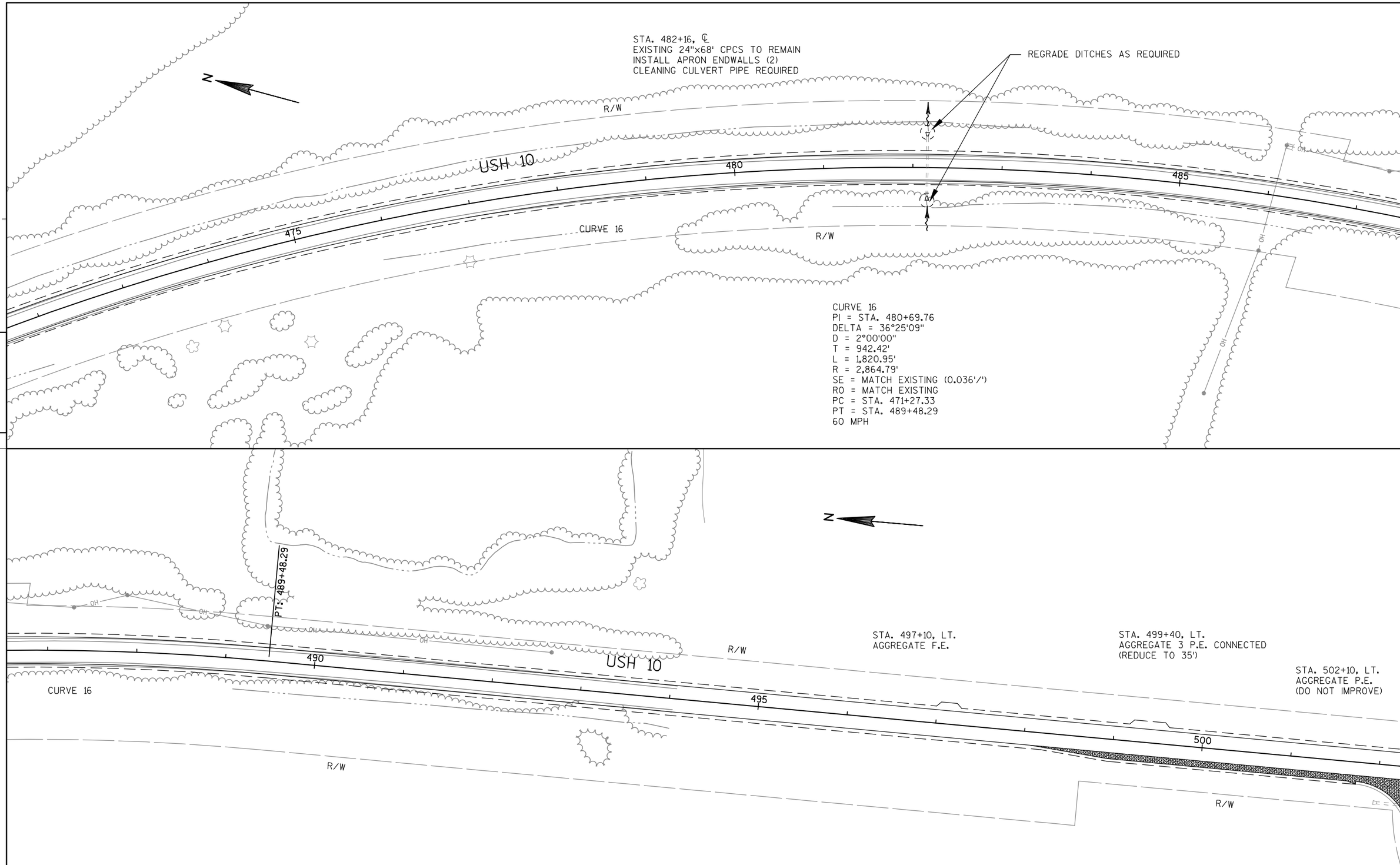

PROJECT NO:1530-07-62	HWY:USH 10	COUNTY:PIERCE	PLAN SHEET	SHEET 104	E

FILE NAME : X:\23046-80\10024\TECH\CADD\DRAWINGS\050201_PN.DWG PLOT DATE : 4/30/2013 8:53 AM PLOT BY : JEFF BREU PLOT NAME : PLOT SCALE : 1" = 100'_XREF

WISDOT/CADDS SHEET 44

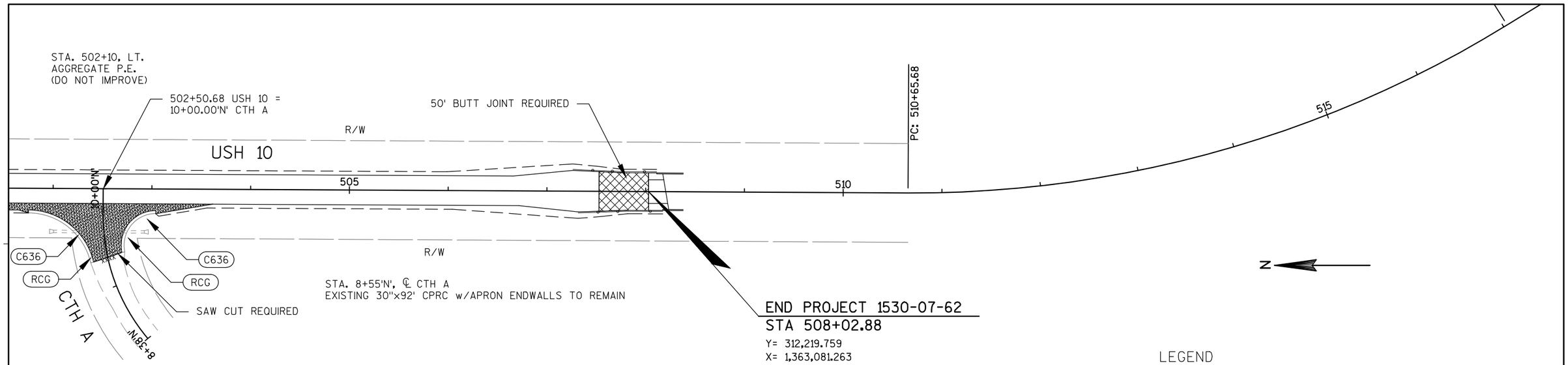

5

5

PROJECT NO: 1530-07-62	HWY: USH 10	COUNTY: PIERCE	PLAN SHEET	SHEET 105	E

Standard Detail Drawing List

08A05-18B	INLET COVERS TYPE B, B-A, C, MS, MS-A, & WM
08C08-01	INLETS MEDIAN 1 AND 2 GRATE
08D01-17	CONCRETE CURB, CONCRETE CURB AND GUTTER AND TIES
08D04-05	CONCRETE SURFACE DRAINS & ASPHALTIC FLUMES
08E08-03	TYPICAL INSTALLATIONS OF EROSION BALES / TEMPORARY DITCH CHECKS
08E09-06	SILT FENCE
08F01-11	APRON ENDWALLS FOR CULVERT PIPE
08F02-01	APRON ENDWALLS FOR PIPE ARCH AND ELLIPTICAL PIPE
08F04-07	JOINT TIES FOR CONCRETE PIPE AND CONCRETE COLLAR DETAIL
08F07-05	STEEL APRON ENDWALLS FOR CULVERT PIPE AND PIPE ARCH SLOPED SIDE FRAINS
13A05-05A	SHOULDER RUMBLE STRIP, MILLING
13A05-05B	SHOULDER RUMBLE STRIP, MILLING
13A08-01	ASPHALTIC RUMBLE STRIPS AT INTERSECTION
13A11-02A	2-LANE RURAL CENTER LINE RUMBLE STRIP, MILLING
13A11-02B	2-LANE RURAL CENTER LINE RUMBLE STRIP, MILLING
14B07-13A	CONCRETE BARRIER TEMPORARY PRECAST, 12'-6"
14B07-13B	CONCRETE BARRIER TEMPORARY PRECAST, 12'-6"
14B07-13C	CONCRETE BARRIER TEMPORARY PRECAST, 12'-6"
14B07-13D	CONCRETE BARRIER TEMPORARY PRECAST, 12'-6"
14B07-13E	CONCRETE BARRIER TEMPORARY PRECAST, 12'-6"
14B07-13F	CONCRETE BARRIER TEMPORARY PRECAST, 12'-6"
14B07-13G	CONCRETE BARRIER TEMPORARY PRECAST, 12'-6"
14B07-13H	CONCRETE BARRIER TEMPORARY PRECAST, 12'-6"
14B15-07A	STEEL PLATE BEAM GUARD, CLASS "A" INSTALLATION & ELEMENTS
14B15-07B	STEEL PLATE BEAM GUARD, CLASS "A" INSTALLATION & ELEMENTS
14B15-07C	STEEL PLATE BEAM GUARD, CLASS "A", INSTALLATION & ELEMENTS
14B16-04A	ANCHORAGE FOR STEEL PLATE BEAM GUARD TYPE 2
14B16-04B	ANCHORAGE FOR STEEL PLATE BEAM GUARD TYPE 2
14B18-06A	STEEL PLATE BEAM GUARD, CLASS "A" (AT BRIDGES, OBSTACLES AND SIDEROADS/DRIVEWAYS)
14B24-07A	STEEL PLATE BEAM GUARD ENERGY ABSORBING TERMINAL
14B24-07B	STEEL PLATE BEAM GUARD ENERGY ABSORBING TERMINAL
14B24-07C	STEEL PLATE BEAM GUARD ENERGY ABSORBING TERMINAL
14B25-01	STEEL PLATE BEAM GUARD, CLASS "A", OVER LOW FILL CULVERTS
14B27-01A	STEEL PLATE BEAM GUARD SHORT RADIUS TERMINAL
14B27-01B	STEEL PLATE BEAM GUARD SHORT RADIUS TERMINAL
14B27-01C	STEEL PLATE BEAM GUARD SHORT RADIUS TERMINAL
14B29-01	SAFETY EDGE
14B42-02A	MIDWEST GUARDRAIL SYSTEM (MGS) GUARDRAIL
14B42-02B	MIDWEST GUARDRAIL SYSTEM (MGS) GUARDRAIL
14B42-02C	MIDWEST GUARDRAIL SYSTEM (MGS) GUARDRAIL
14B43-02A	MIDWEST GUARDRAIL SYSTEM LONG SPAN MGS (L)
14B43-02B	MIDWEST GUARDRAIL SYSTEM LONG SPAN MGS (L)
14B43-02C	MIDWEST GUARDRAIL SYSTEM LONG SPAN MGS (L)
14B44-01A	MIDWEST GUARDRAIL SYSTEM ENERGY ABSORBING TERMINAL (MGS)
14B44-01B	MIDWEST GUARDRAIL SYSTEM ENERGY ABSORBING TERMINAL (MGS)
14B44-01C	MIDWEST GUARDRAIL SYSTEM ENERGY ABSORBING TERMINAL (MGS)
15A03-02A	FLEXIBLE MARKER POST FOR CULVERT END
15A03-02B	FLEXIBLE MARKER POST FOR CULVERT END
15C04-01	TRAFFIC CONTROL, ADVANCE WARNING SIGNS 45 M.P.H. OR GREATER TWO-WAY UNDIVIDED ROAD OPEN TO TRAFFIC
15C08-15A	PAVEMENT MARKING (MAINLINE)
15C08-15B	PAVEMENT MARKING (INTERSECTIONS)
15C08-15C	PAVEMENT MARKING (CLIMBING LANE & PASSING LANE)
15C08-15D	PAVEMENT MARKING (CLIMBING LANE & PASSING LANE)
15C12-03	TRAFFIC CONTROL FOR LANE CLOSURE (SUITABLE FOR MOVING OPERATIONS)
15C19-01A	MOVING PAVEMENT MARKING OPERATION TWO-LANE TWO-WAY ROADWAY
15C27-01	DOUBLE ARROW WARNING SIGN PLACEMENT
15D28-01	TRAFFIC CONTROL, WORK ON SHOULDER OR PARKING LANE, UNDIVIDED ROADWAY

6

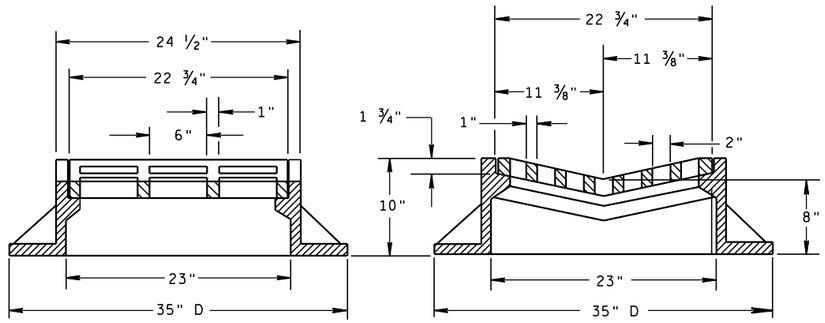

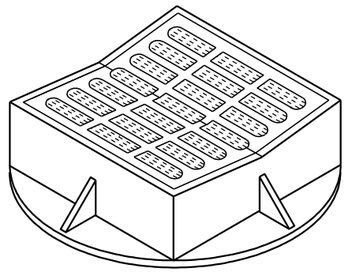

TYPE "B"

(APPROXIMATE WEIGHT 405 LBS.)

FRAME..... 294 LBS.
GRATE..... 111 LBS.

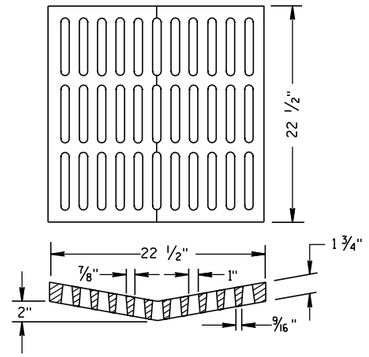

ALTERNATIVE GRATE FOR TYPE "B" COVER

(APPROXIMATE GRATE WEIGHT 134 LBS.)

USE WHERE PEDESTRIAN OR BICYCLE TRAFFIC IS POSSIBLE.

NOTED AS TYPE B-A ON THE DRAINAGE TABLE

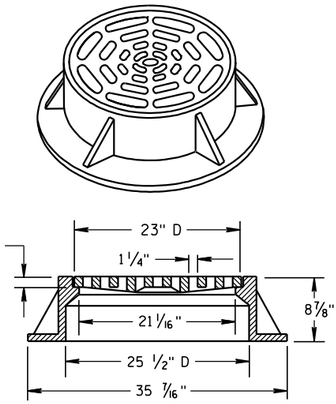

TYPE "C"

(APPROXIMATE WEIGHT 259 LBS.)

FRAME..... 152 LBS.
GRATE..... 107 LBS.

GENERAL NOTES

DETAILS OF CONSTRUCTION, MATERIALS AND WORKMANSHIP NOT SHOWN ON THIS DRAWING SHALL CONFORM TO THE PERTINENT REQUIREMENTS OF THE STANDARD SPECIFICATIONS AND THE APPLICABLE SPECIAL PROVISIONS.

DETAIL DRAWINGS FOR PROPOSED ALTERNATE DESIGNS FOR CATCH BASIN, MANHOLE AND INLET COVERS SHALL BE SUBMITTED TO THE ENGINEER FOR APPROVAL PROVIDING THAT SUCH ALTERNATE DESIGNS MAKE PROVISION FOR EQUIVALENT CAPACITY AND STRENGTH.

ROUND FRAMES AND COVERS SHALL HAVE CONTINUOUSLY MACHINED BEARING SURFACES TO PREVENT ROCKING AND RATTLING.

THE ACTUAL WEIGHT OF COVERS MAY VARY WITHIN 5 PERCENT, PLUS OR MINUS, OF THE APPROXIMATE WEIGHT.

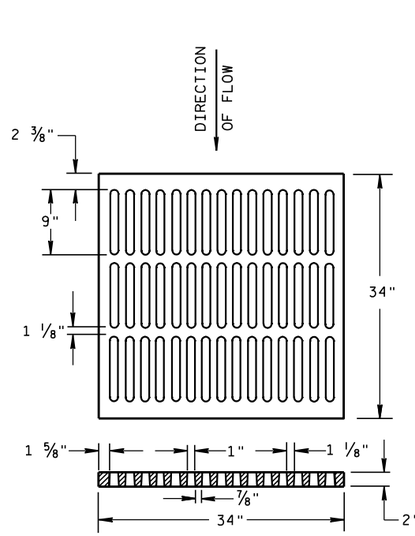

ALTERNATIVE TYPE "MS"

(APPROXIMATE GRATE WEIGHT 329 LBS.)

USE WHERE PEDESTRIAN OR BICYCLE TRAFFIC IS PERMITTED

NOTED AS TYPE MS-A ON THE DRAINAGE TABLE

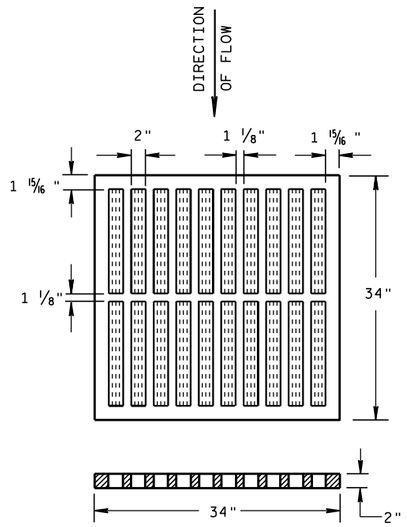

TYPE "MS"

(APPROXIMATE GRATE WEIGHT 268 LBS.)

USE ON FREEWAYS AND EXPRESSWAYS

NOTED AS TYPE MS ON DRAINAGE TABLE

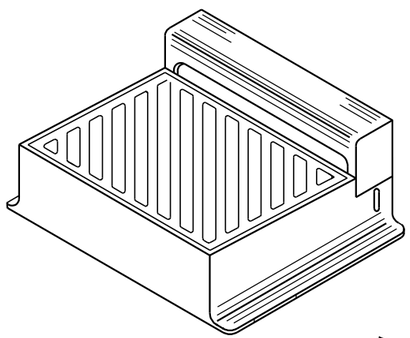

DIRECTION OF FLOW

DIAGONAL SLOTS, SHALL BE ORIENTED TO THE DIRECTION OF FLOW AS ILLUSTRATED. GRATES ARE MANUFACTURED TO BE REVERSIBLE.

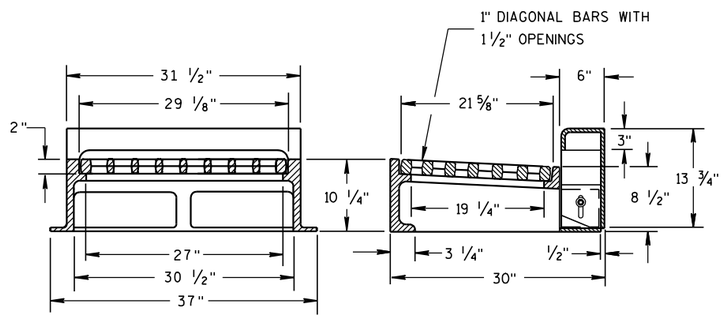

NOTE: CURB BOX HEIGHT ADJUSTABLE 6" TO 9"

TYPE "WM"

(APPROXIMATE WEIGHT 648 LBS.)

FRAME..... 355 LBS.
GRATE..... 156 LBS.
CURB BOX..... 137 LBS.

INLET COVERS
TYPE B, B-A, C, MS, MS-A, & WM

STATE OF WISCONSIN
DEPARTMENT OF TRANSPORTATION

APPROVED

6/5/2012 — DATE

/S/ Jerry H. Zaas — ROADWAY STANDARDS ENGINEER

107

ENT

FHWA

6

S.D.D. 8 A 5-18b

6

S.D.D. 8 A 5-18b

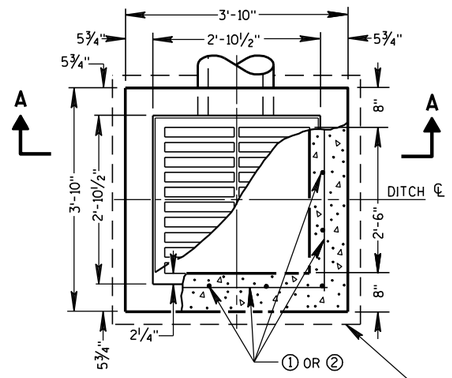

PLAN VIEW

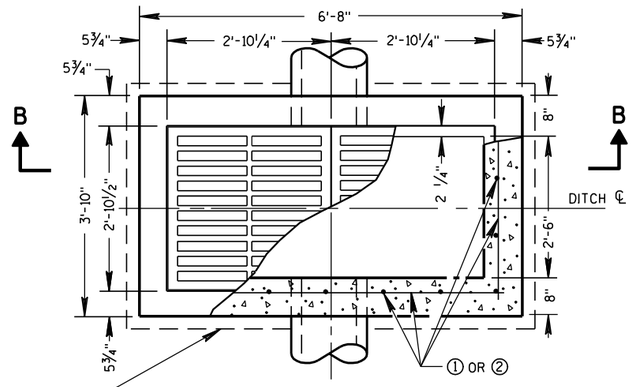

PLAN VIEW

4" OVERHANGING BASE ON REINFORCED CAST-IN-PLACE CONCRETE INLETS

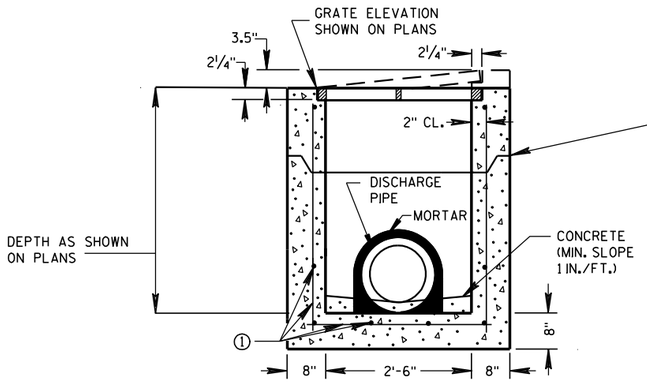

PRECAST REINFORCED CONCRETE SECTION A-A

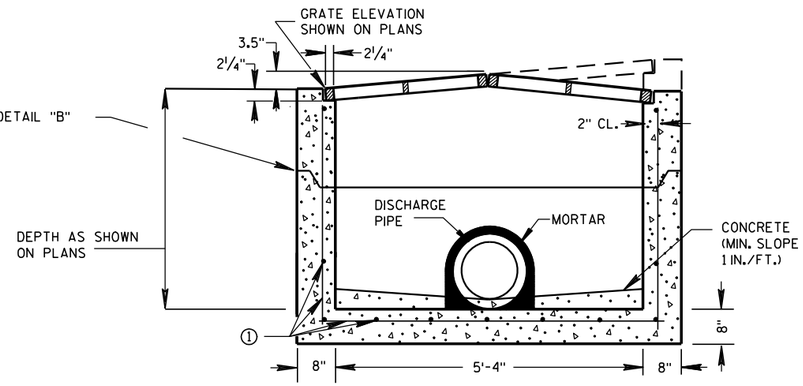

PRECAST REINFORCED CONCRETE SECTION B-B

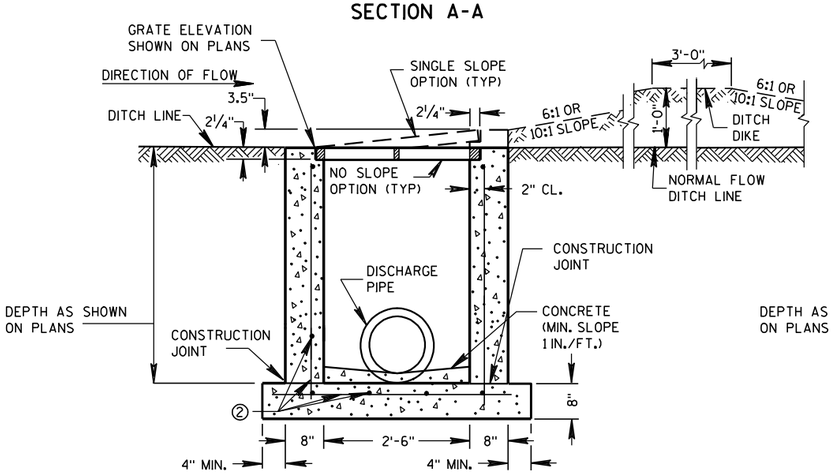

REINFORCED CAST-IN-PLACE CONCRETE SECTION A-A

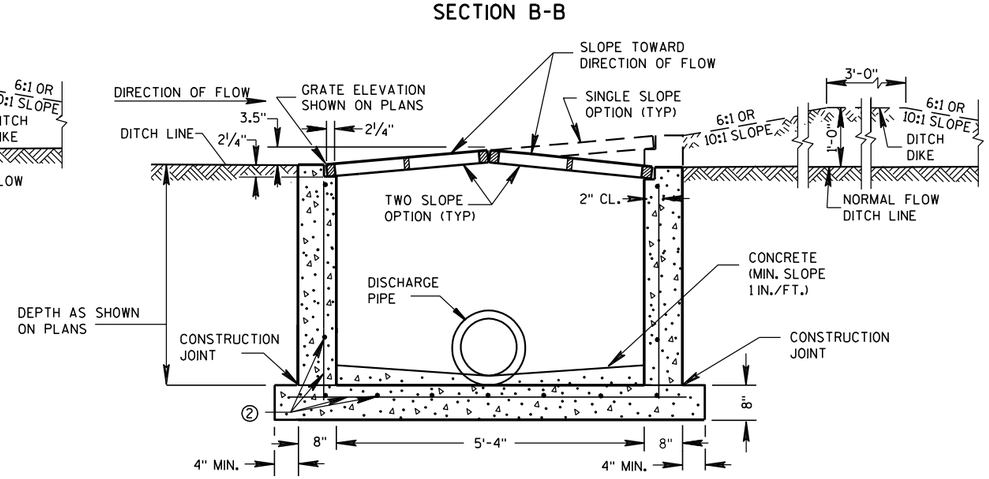

REINFORCED CAST-IN-PLACE CONCRETE SECTION B-B

INLETS MEDIAN 1 GRATE

INLETS MEDIAN 2 GRATE

GENERAL NOTES

DETAILS OF CONSTRUCTION, MATERIALS AND WORKMANSHIP NOT SHOWN ON THIS DRAWING SHALL CONFORM TO THE PERTINENT REQUIREMENTS OF THE STANDARD SPECIFICATIONS AND THE APPLICABLE SPECIAL PROVISIONS.

UNLESS OTHERWISE AUTHORIZED IN WRITING BY THE ENGINEER, THE CONTRACTOR SHALL NOT ORDER AND DELIVER PRECAST INLET UNITS REQUIRED FOR THE PROJECT UNTIL A LIST OF SIZES IS FURNISHED BY THE ENGINEER.

DETAILED DRAWINGS FOR PROPOSED ALTERNATE DESIGNS FOR INLETS WHICH MAY INCLUDE PRECAST REINFORCED CONCRETE INLETS, SHALL BE SUBMITTED TO THE ENGINEER FOR APPROVAL PROVIDING THAT SUCH ALTERNATE DESIGNS MAKE PROVISION FOR EQUIVALENT CAPACITY AND STRENGTH.

ALL MEDIAN INLETS ARE DESIGNATED ON THE PLANS AS "INLETS, 1G-MS", ETC. THE FIRST NUMBER AND LETTER DESIGNATE THE TYPE OF STRUCTURE, AND THE FOLLOWING LETTERS DESIGNATE THE TYPE OF COVER TO BE USED TO COMPRISE THE COMPLETE UNIT.

ALL BAR STEEL REINFORCEMENT SHALL BE EMBEDDED 2 INCHES CLEAR UNLESS OTHERWISE SHOWN OR NOTED.

PRECAST REINFORCED RISERS SHALL HAVE A TONGUE AND GROOVE JOINT WITH TONGUE UP OR DOWN.

ALL PRECAST INLET UNITS SHALL CONFORM TO THE PERTINENT REQUIREMENTS OF ASTM C 913.

MAXIMUM INSIDE PIPE DIAMETER DETERMINED BY 3" CLEARANCE ON EACH SIDE OF THE OUTSIDE WALL OF THE PIPE. SEE DETAIL "A". ASSUMES PIPE ENTERS PERPENDICULAR TO THE STRUCTURE.

① FOR PRECAST INLETS PROVIDE REINFORCING STEEL IN ACCORDANCE TO ASTM C 913.

② CONTRACTOR TO PROVIDE DRAWING(S) STAMPED BY A PROFESSIONAL ENGINEER FOR STEEL REINFORCING DESIGN FOR CAST-IN-PLACE STRUCTURES.

PIPE MATRIX

	MAXIMUM INSIDE PIPE DIAMETER	
INLET SIZE	WIDTH (IN)	LENGTH (IN)
1 GRATE	18	18
2 GRATE	18	42

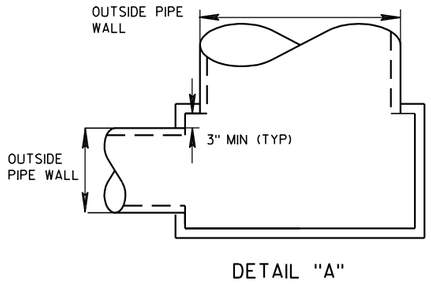

DETAIL "A"

JOINTS TO BE SEALED WITH A BUTYL RUBBER SEAL PER SEALANT MANUFACTURERS RECOMMENDATIONS CONFORMING TO ASTM C 990 (TYP)

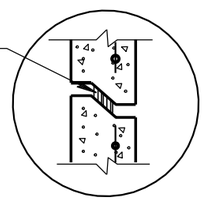

DETAIL "B"

INLETS MEDIAN 1 AND 2 GRATE

STATE OF WISCONSIN
DEPARTMENT OF TRANSPORTATION

APPROVED

6/5/2012
DATE

/S/ Jerry H. Zogg
ROADWAY STANDARDS DEVELOPMENT ENGINEER

FHWA

S.D.D. 8 C 8-1

6

S.D.D. 8 C 8-1

6

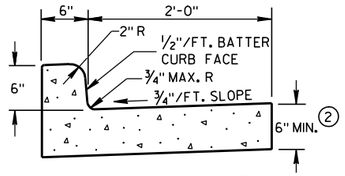

TYPES A & D (1)

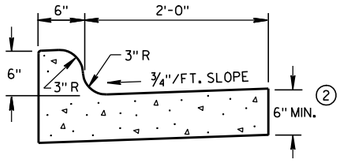

TYPES K & L (1)

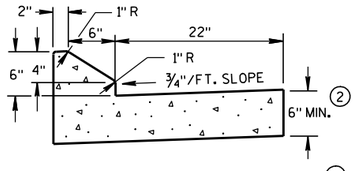

6" SLOPED CURB TYPES G & J (1)

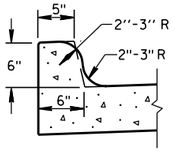

OPTIONAL CURB SHAPE FOR TYPES K & L (1)

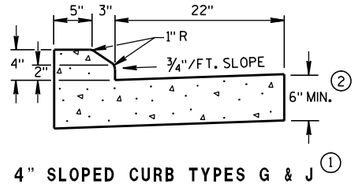

4" SLOPED CURB TYPES G & J (1)

CONCRETE CURB & GUTTER 30"

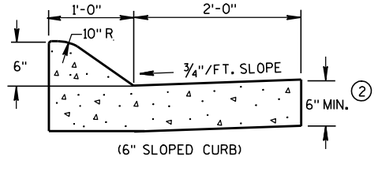

(6" SLOPED CURB)

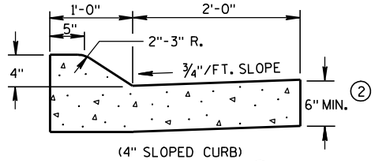

(4" SLOPED CURB)

TYPES A & D (1)

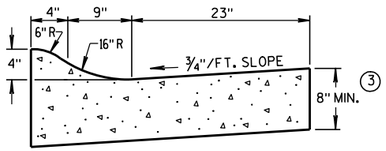

4" SLOPED CURB TYPES R & T (1) (4)

CONCRETE CURB & GUTTER 36"

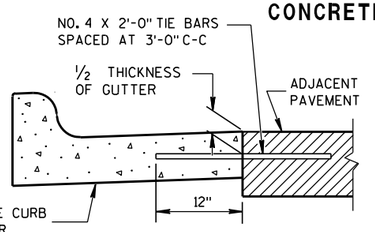

TYPICAL TIE BAR LOCATION (1)

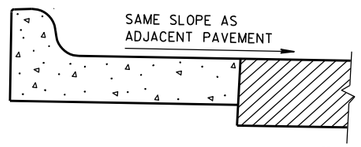

REVERSE SLOPE GUTTER (5)
(TYPICAL FOR ALL CURB & GUTTER TYPES)

GENERAL NOTES

DETAILS OF CONSTRUCTION, MATERIALS AND WORKMANSHIP NOT SHOWN ON THIS DRAWING SHALL CONFORM TO THE PERTINENT REQUIREMENTS OF THE CONTRACT.

PAVEMENT TIES AND TIE BARS SHALL BE EPOXY COATED IN CONFORMANCE WITH SUBSECTION 505.2.6.2 OF THE STANDARD SPECIFICATIONS.

INTEGRAL CURB & GUTTER SHALL CONFORM TO THE DETAILS SHOWN FOR CONCRETE CURB & GUTTER INCLUDING THE TRANSVERSE GUTTER SLOPE. A LONGITUDINAL CONSTRUCTION JOINT IS NOT REQUIRED WITH INTEGRAL CURB AND GUTTER.

WHERE THE TRANSVERSE JOINTS IN THE PAVEMENT ARE REQUIRED TO BE SEALED, THE JOINTS IN THE INTEGRAL CURB AND GUTTER SHALL BE SEALED TO THE FACE OF CURB WITH THE SAME TYPE OF SEALANT. THE COST OF FURNISHING AND INSTALLING THIS SEALANT SHALL BE INCIDENTAL TO THE ITEM CONCRETE CURB AND GUTTER.

UNLESS OTHERWISE SHOWN ON THE TYPICAL CROSS SECTIONS, THE BASE AGGREGATE AND COMMON EXCAVATION LIMITS ARE 2'-0" BEHIND THE BACK OF CURBS.

(1) TIE BARS ARE REQUIRED FOR CURB AND GUTTER TYPES A, G, K AND R.

(2) THE BOTTOM OF CURB AND GUTTER MAY BE CONSTRUCTED EITHER LEVEL OR PARALLEL TO THE SLOPE OF THE SUBGRADE OR BASE AGGREGATE PROVIDED A 6" MINIMUM GUTTER THICKNESS IS MAINTAINED.

(3) THE BOTTOM OF CURB AND GUTTER MAY BE CONSTRUCTED EITHER LEVEL OR PARALLEL TO THE SLOPE OF THE SUBGRADE OR BASE AGGREGATE PROVIDED A 8" MINIMUM GUTTER THICKNESS IS MAINTAINED.

(4) THE FACE OF CURB IS 6" FROM THE BACK OF CURB.

(5) WHEN REVERSE SLOPE GUTTER IS REQUIRED, THE LOCATION(S) WILL BE SHOWN ELSEWHERE IN THE PLAN.

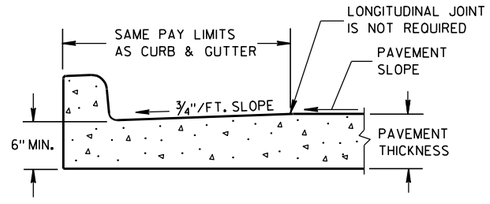

PARTIAL SECTION OF PAVEMENT WITH INTEGRAL CURB & GUTTER

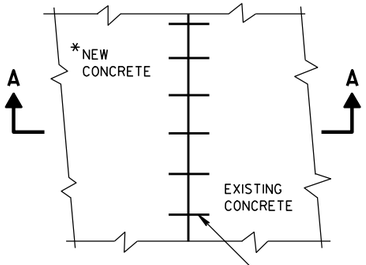

PLAN VIEW

*NEW CURB & GUTTER, SURFACE DRAINS, CONCRETE PAVEMENT OR OTHER NEW CONCRETE.

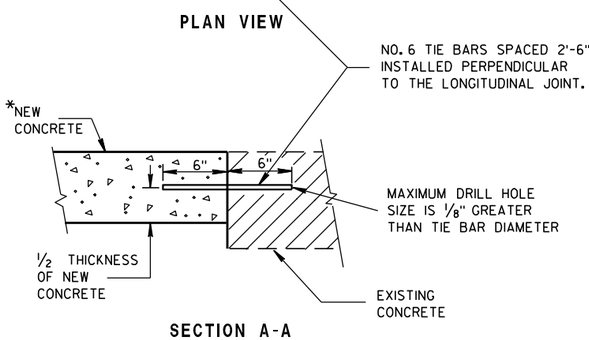

SECTION A-A

TIE BARS DRILLED INTO EXISTING PAVEMENT

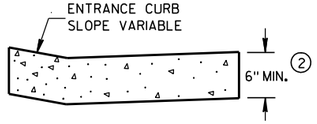

DRIVEWAY ENTRANCE CURB
(WHEN DIRECTED BY THE ENGINEER)

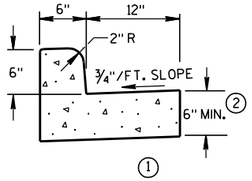

(1)
TYPES A & D
CONCRETE CURB & GUTTER 18"

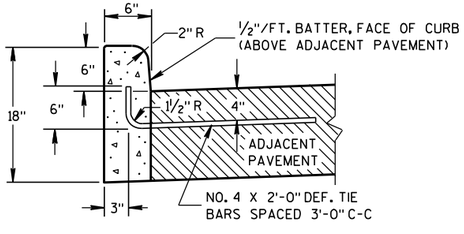

(1)
TYPES A & D

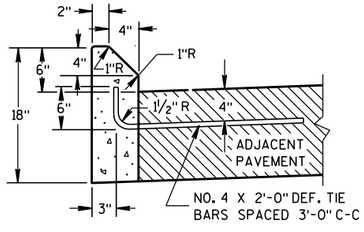

(1)
TYPES G & J

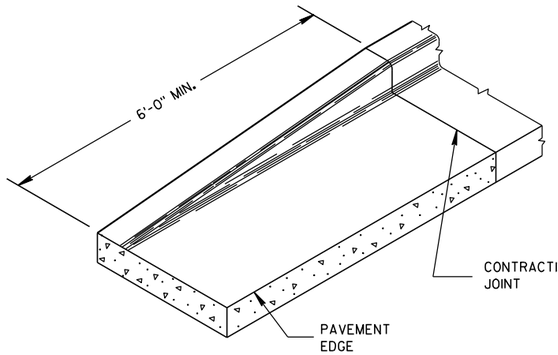

END SECTION CURB & GUTTER

CONCRETE CURB

CONCRETE CURB, CONCRETE CURB & GUTTER AND TIES

STATE OF WISCONSIN
DEPARTMENT OF TRANSPORTATION

APPROVED
9/4/08 DATE
/S/ Jerry H. [illegible]
ROADWAY STANDARDS ENGINEER

FHWA ENT

6

S.D.D. 8 D 1-17

GENERAL NOTES

DETAILS OF CONSTRUCTION, MATERIALS AND WORKMANSHIP NOT SHOWN ON THIS DRAWING SHALL CONFORM TO PERTINENT REQUIREMENTS OF THE STANDARD SPECIFICATIONS AND APPLICABLE SPECIAL PROVISIONS.

WELDED STEEL WIRE FABRIC SHALL BE IN ACCORDANCE WITH AASHTO SPECIFICATION M55.

① JOINTS SHALL BE 1/8 TO 1/4 INCH WIDE BY 1 1/2 INCHES DEEP AND SPACED AT UNIFORM INTERVALS OF APPROXIMATELY 4 FEET.

② GEOTEXTILE FABRIC TYPE "R" SHALL UNDERLAY THE FULL LENGTH AND WIDTH OF THE CONCRETE SURFACE DRAIN AND RIPRAP.

③ CONCRETE SURFACE DRAIN WITHOUT CURB AND GUTTER MAY BE USED ON BACKSLOPES WHEN SPECIFIED

ASPHALTIC FLUME

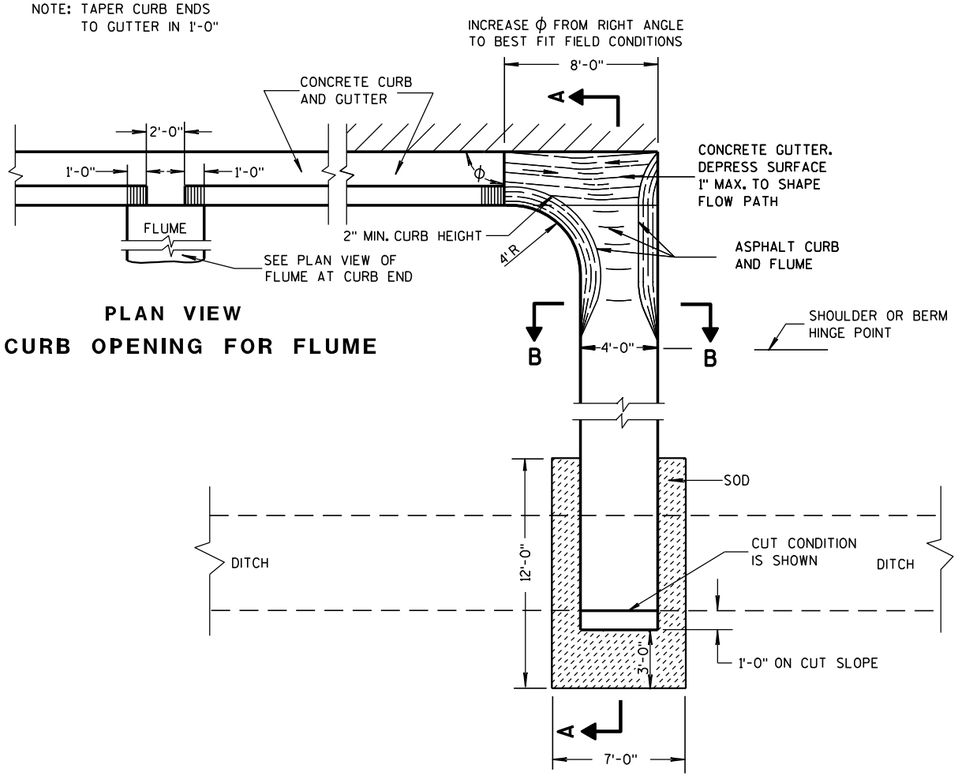

PLAN VIEW
CURB OPENING FOR FLUME

PLAN VIEW
FLUME AT CURB END

③ CONCRETE SURFACE DRAIN

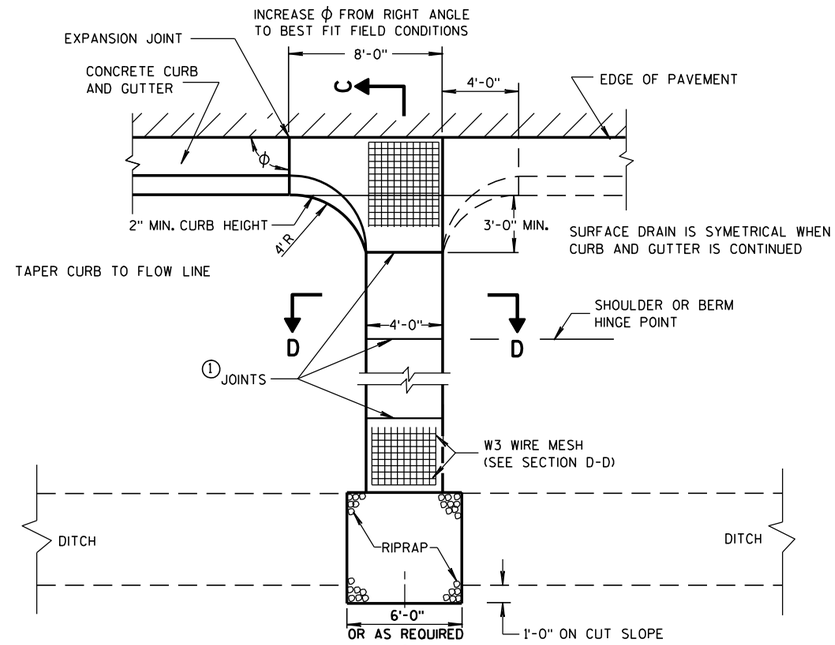

PLAN VIEW

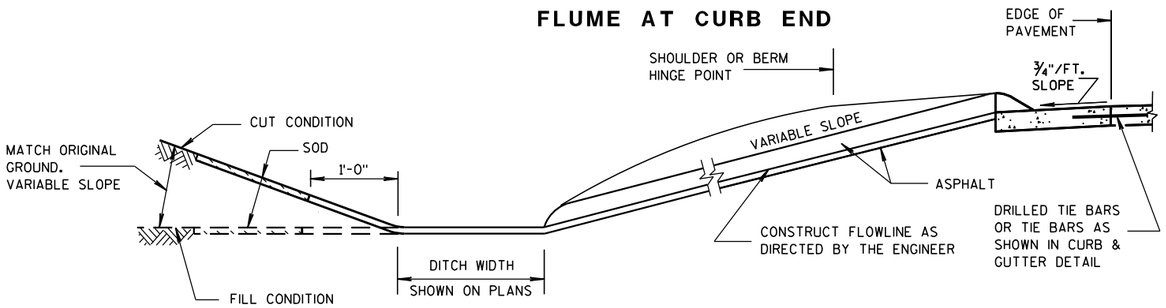

SECTION A-A

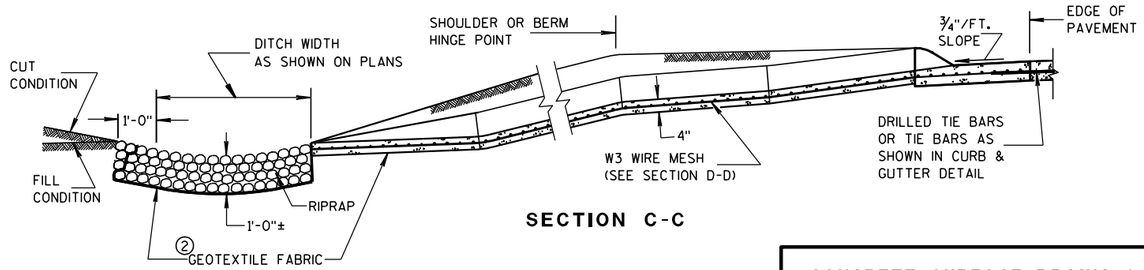

SECTION C-C

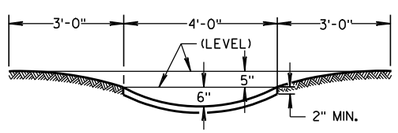

SECTION B-B

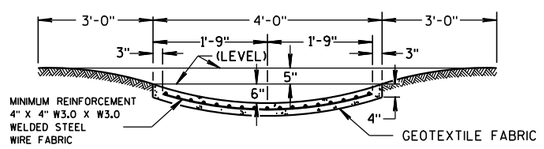

SECTION D-D

CONCRETE SURFACE DRAINS & ASPHALTIC FLUMES

STATE OF WISCONSIN
DEPARTMENT OF TRANSPORTATION

APPROVED
9-4-08 /S/ Jerry H. Zogg
DATE ROADWAY STANDARDS DEVELOPMENT ENGINEER
FHWA

6

S.D.D. 8 D 4-5

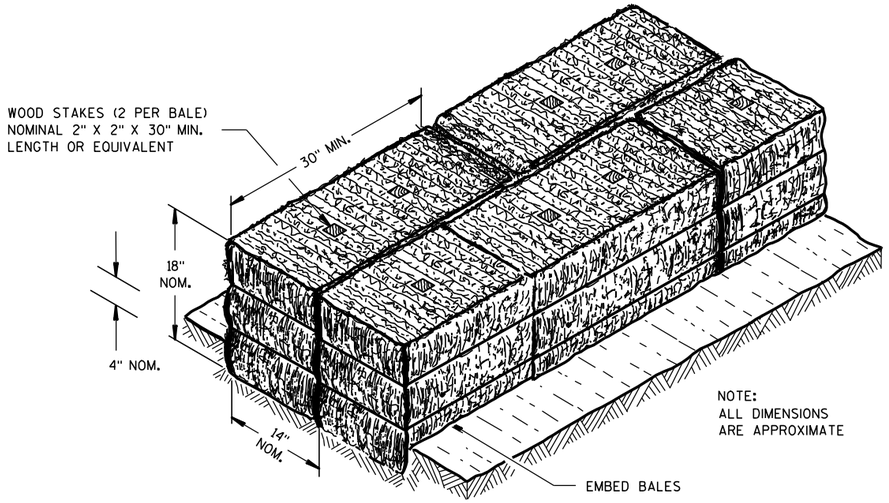

SECTION A-A

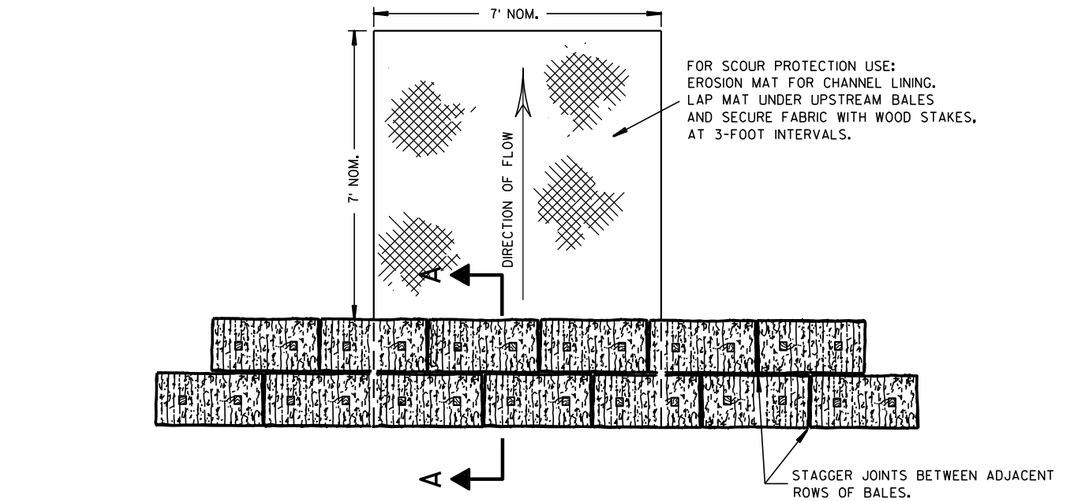

PLAN VIEW

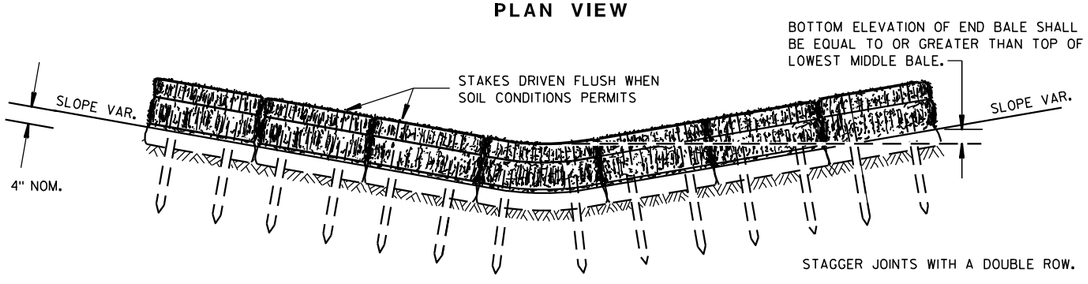

FRONT ELEVATION

TEMPORARY DITCH CHECK USING EROSION BALES (1)

GENERAL NOTES

DETAILS OF CONSTRUCTION, MATERIALS AND WORKMANSHIP NOT SHOWN ON THIS DRAWING SHALL CONFORM TO THE PERTINENT REQUIREMENTS OF THE STANDARD SPECIFICATIONS AND THE APPLICABLE SPECIAL PROVISIONS.

(1) TEMPORARY DITCH CHECKS EITHER EROSION BALES OR MANUFACTURED SHALL BE PAID FOR UNDER THE BID ITEM OF TEMPORARY DITCH CHECK. THE DEPARTMENT WILL NOT PAY FOR TEMPORARY DITCH CHECKS CONSTRUCTED OF A SINGLE ROW OF EROSION BALES.

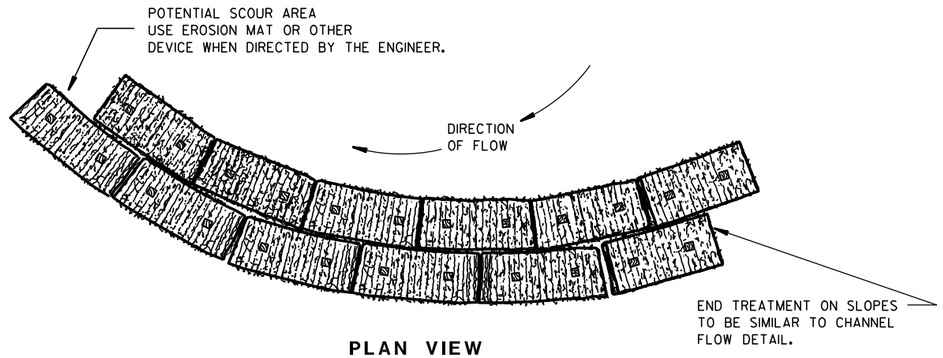

PLAN VIEW

WHEN ALTERING THE DIRECTION OF FLOW

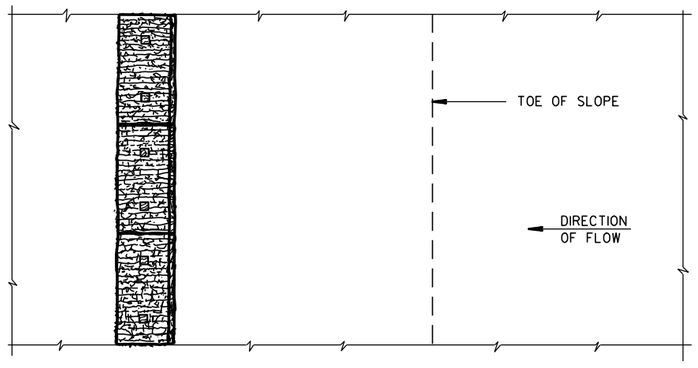

PLAN VIEW

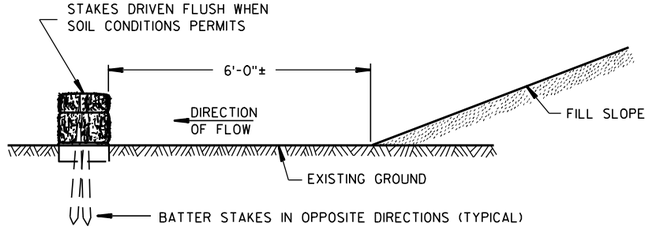

FRONT ELEVATION

WHEN EXISTING GROUND SLOPES AWAY FROM FILL SLOPE

EROSION BALES FOR SHEET FLOW

TYPICAL INSTALLATIONS OF EROSION BALES / TEMPORARY DITCH CHECKS

STATE OF WISCONSIN
DEPARTMENT OF TRANSPORTATION

APPROVED

6/04/02 DATE — /S/ Beth Cannestra — CHIEF ROADWAY DEVELOPMENT ENGINEER

FHWA

6

S.D.D. 8 E 8-3

6

S.D.D. 8 E 8-3

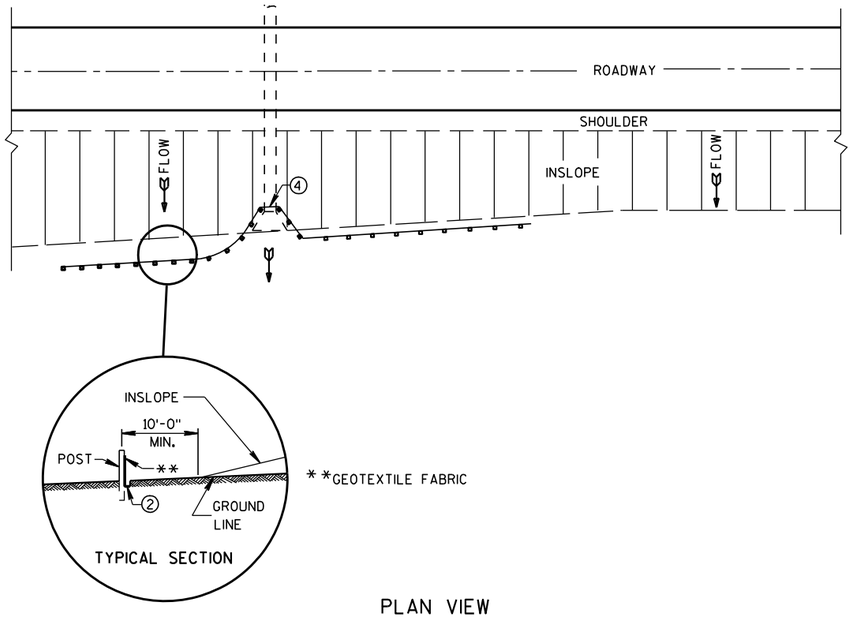

PLAN VIEW

TYPICAL APPLICATION OF SILT FENCE

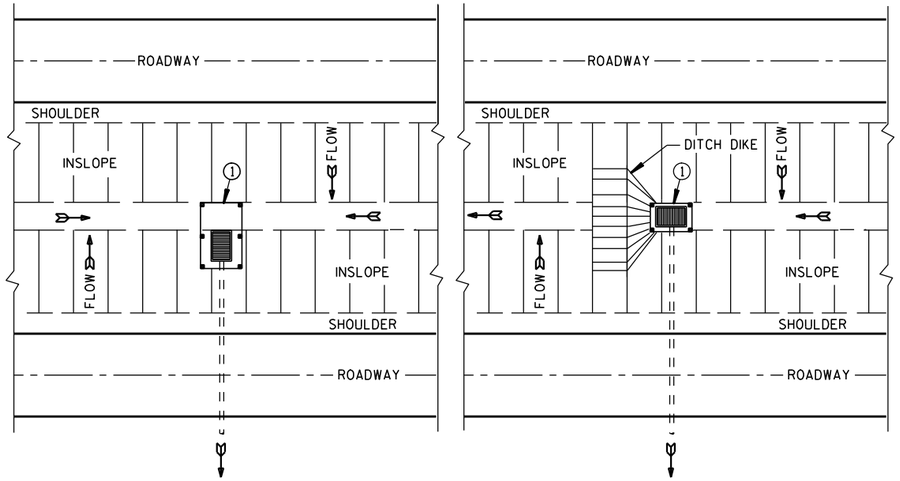

PLAN VIEW

SILT FENCE AT MEDIAN SURFACE DRAINS

GENERAL NOTES

DETAILS OF CONSTRUCTION NOT SHOWN ON THIS DRAWING SHALL CONFORM TO THE PERTINENT REQUIREMENTS OF THE STANDARD SPECIFICATIONS AND APPLICABLE SPECIAL PROVISIONS.

① HORIZONTAL BRACE REQUIRED WITH 2" X 4" WOODEN FRAME OR EQUIVALENT AT TOP OF POSTS.

② FOR MANUAL INSTALLATIONS THE TRENCH SHALL BE A MINIMUM OF 4" WIDE & 6" DEEP TO BURY AND ANCHOR THE GEOTEXTILE FABRIC. FOLD MATERIAL TO FIT TRENCH AND BACKFILL & COMPACT TRENCH WITH EXCAVATED SOIL.

③ WOOD POSTS SHALL BE A MINIMUM SIZE OF 1⅛" X 1⅛" OF OAK OR HICKORY.

④ SILT FENCE TO EXTEND ACROSS THE TOP OF THE PIPE.

⑤ CONSTRUCT SILT FENCE FROM A CONTINUOUS ROLL IF POSSIBLE BY CUTTING LENGTHS TO AVOID JOINTS. IF A JOINT IS NECESSARY USE ONE OF THE FOLLOWING TWO METHODS; A) OVERLAP THE END POSTS AND TWIST, OR ROTATE, AT LEAST 180 DEGREES, B) HOOK THE END OF EACH SILT FENCE LENGTH.

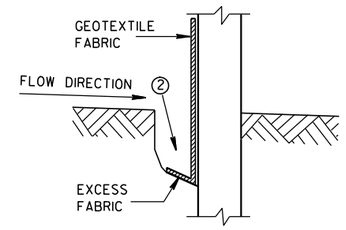

TRENCH DETAIL

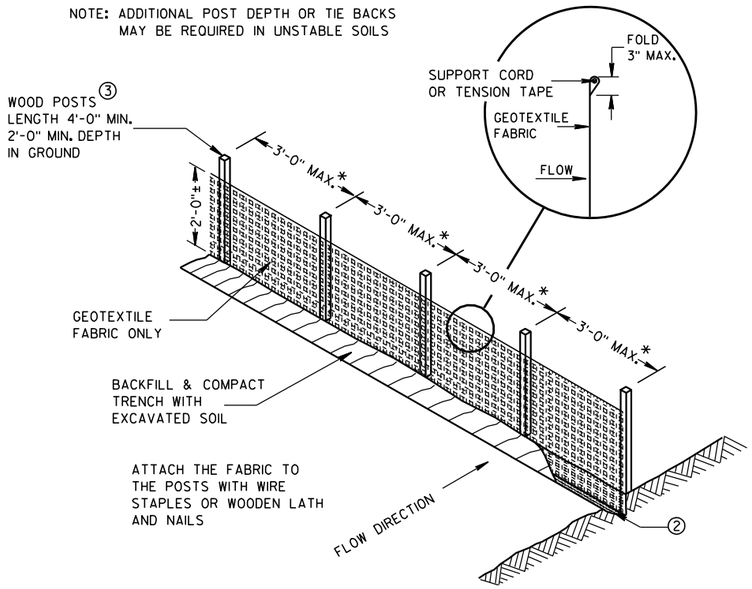

*NOTE: 8'-0" POST SPACING ALLOWED IF A WOVEN GEOTEXTILE FABRIC IS USED.

SILT FENCE

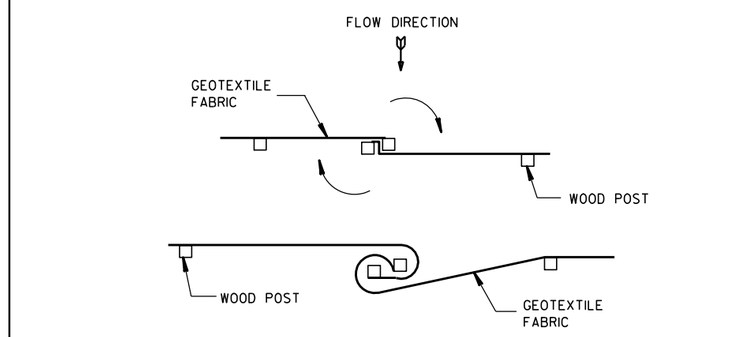

TWIST METHOD

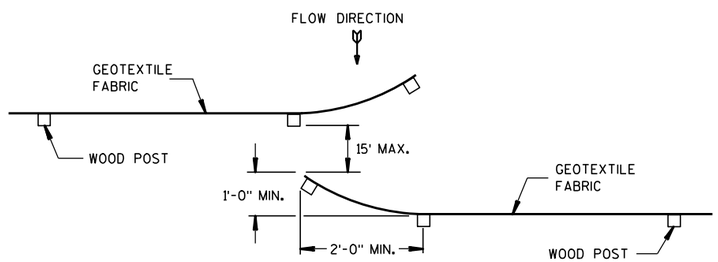

HOOK METHOD

JOINING TWO LENGTHS OF SILT FENCE ⑤

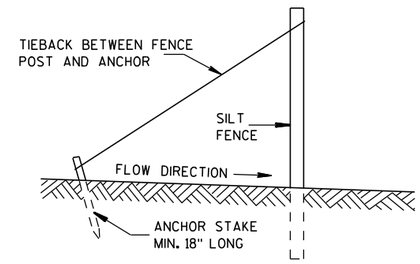

SILT FENCE TIE BACK

(WHEN REQUIRED BY THE ENGINEER)

SILT FENCE

STATE OF WISCONSIN
DEPARTMENT OF TRANSPORTATION

APPROVED
4-29-05 DATE
/S/ Beth Cannestra
CHIEF ROADWAY DEVELOPMENT ENGINEER
FHWA

6

S.D.D. 8 E 9-6

6

S.D.D. 8 E 9-6

METAL APRON ENDWALLS

PIPE DIA. (IN.)	MIN. THICK. (Inches) STEEL	MIN. THICK. (Inches) ALUM.	DIMENSIONS (Inches) A (±1")	B (MAX.)	H (±1")	L (±1 1/2")	L1 ①	L2 ①	W (±2")	APPROX. SLOPE	BODY
12	.064	.060	6	6	6	21	12	17 1/2	24	2 1/2 to 1	1 Pc.
15	.064	.060	7	8	6	26	14	21 3/4	30	2 1/2 to 1	1 Pc.
18	.064	.060	8	10	6	31	15	28 1/4	36	2 1/2 to 1	1 Pc.
21	.064	.060	9	12	6	36	18	29 5/8	42	2 1/2 to 1	1 Pc.
24	.064	.075	10	13	6	41	18	37 1/4	48	2 1/2 to 1	1 Pc.
30	.079	.075	12	16	8	51	18	52 1/4	60	2 1/2 to 1	1 Pc.
36	.079	.105	14	19	9	60	24	59 3/4	72	2 1/2 to 1	2 Pc.
42	.109	.105	16	22	11	69	24	75 5/8	84	2 1/2 to 1	2 Pc.
48	.109	.105	18	27	12	78	24	81	90	2 1/4 to 1	3 Pc.
54	.109	.105	18	30	12	84	30	85 1/2	102	2 1/4 to 1	3 Pc.
60	.109×	.105×	18	33	12	87	—	—	114	2 to 1	3 Pc.
66	.109×	.105×	18	36	12	87	—	—	120	2 to 1	3 Pc.
72	.109×	.105×	18	39	12	87	—	—	126	2 to 1	3 Pc.
78	.109×	.105×	18	42	12	87	—	—	132	1 1/2 to 1	3 Pc.
84	.109×	.105×	18	45	12	87	—	—	138	1 1/2 to 1	3 Pc.
90	.109×	.105×	18	37	12	87	—	—	144	1 1/2 to 1	3 Pc.
96	.109×	.105×	18	35	12	87	—	—	150	1 1/2 to 1	3 Pc.

× EXCEPT CENTER PANEL SEE GENERAL NOTES

REINFORCED CONCRETE APRON ENDWALLS

PIPE DIA. (IN.)	DIMENSIONS (Inches) T	A	B	C	D	E	G	APPROX. SLOPE
12	2	4	24	48 7/8	72 1/8	24	2	3 to 1
15	2 1/4	6	27	46	73	30	2 1/4	3 to 1
18	2 1/2	9	27	46	73	36	2 1/2	3 to 1
21	2 3/4	9	36	37 1/2	73 1/2	42	2 3/4	3 to 1
24	3	9 1/2	43 1/2	30	73 1/2	48	3	3 to 1
27	3 1/4	10 1/2	49 1/2	24	73 1/2	54	3 1/4	3 to 1
30	3 1/2	12	54	19 3/4	73 1/2	60	3 1/2	3 to 1
36	4	15	63	34 3/4	97 3/4	72	4	3 to 1
42	4 1/2	21	63	35	98	78	4 1/2	3 to 1
48	5	24	72	26	98	84	5	3 to 1
54	5 1/2	27	65	* 33 1/4 - ** 35	* 98 1/4 - ** 100	90	5 1/2	2 2/5 to 1
60	6	* 30 - ** 35	60	39	99	96	5	2 to 1
66	6 1/2	* 24 - ** 30	* 72 - ** 78	* 21 - ** 27	99	102	5 1/2	2 to 1
72	7	* 24 - ** 36	78	21	99	108	6	2 to 1
78	7 1/2	* 24 - ** 36	78	21	99	114	6 1/2	2 to 1
84	8	36	90 1/2	21	111 1/2	120	6 1/2	1 1/2 to 1
90	8 1/2	41	87 1/2	24	111 1/2	132	6 1/2	1 1/2 to 1

*MINIMUM
**MAXIMUM

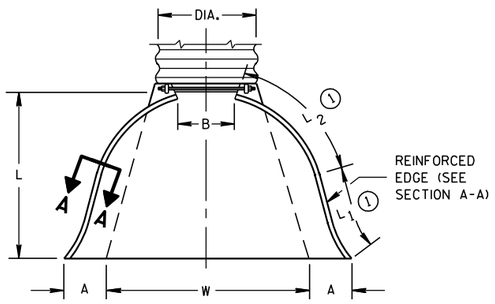

PLAN VIEW

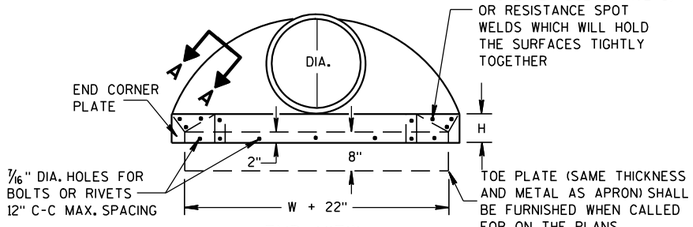

END VIEW

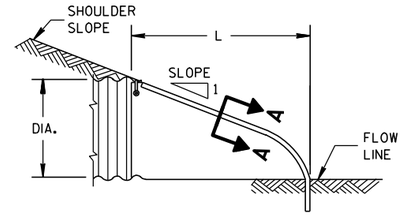

SIDE ELEVATION

METAL ENDWALLS

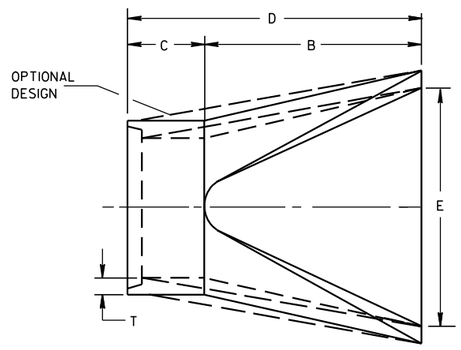

PLAN

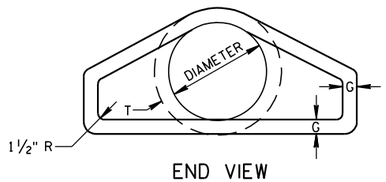

END VIEW

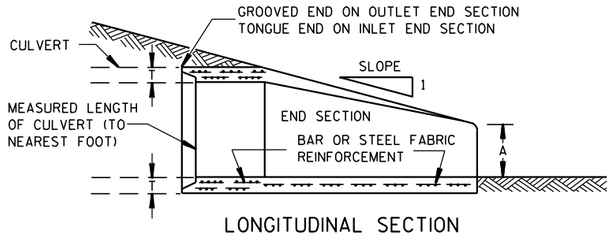

LONGITUDINAL SECTION

CONCRETE ENDWALLS

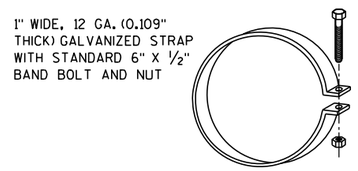

ALTERNATE FOR TYPE 1 CONNECTION

END SECTION CONNECTOR STRAP

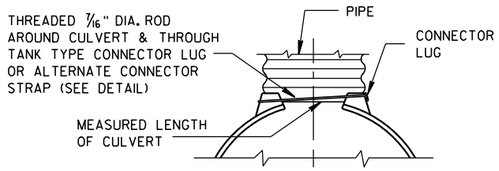

TYPE 1
FOR 12" THRU 24" CORR. PIPE

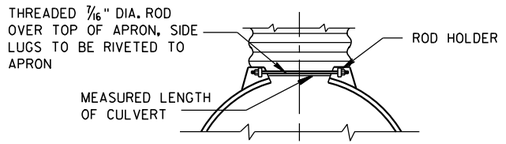

TYPE 2
FOR 30" THRU 96" CORR. PIPE

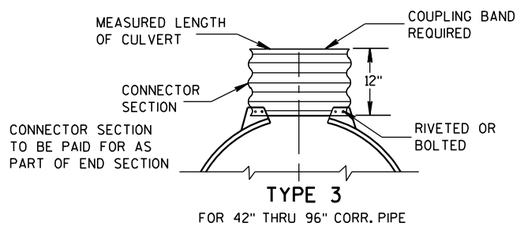

TYPE 3
FOR 42" THRU 96" CORR. PIPE

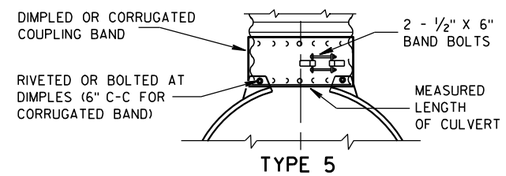

TYPE 5
ALTERNATE FOR:
ALL SIZES CORRUGATED CIRCULAR PIPE

NOTE: DIMPLED BAND FITS OVER OUTSIDE OF ENDWALL. AND CORRUGATED BAND FITS INSIDE ENDWALL. DIMPLED BAND MAY BE USED WITH HELICALLY CORRUGATED PIPE.

FOR CIRCUMFERENTIALLY CORRUGATED PIPE USE ENDWALL CONNECTION DETAILS 1, 2, 3 OR 5 AS APPLICABLE.

FOR HELICALLY CORRUGATED PIPE USE ENDWALL CONNECTION DETAILS 1, 2 OR 5.

FOR HELICALLY CORRUGATED PIPES WITH TWO CIRCUMFERENTIAL CORRUGATIONS AT EACH END USE ENDWALL CONNECTION DETAILS 1, 2 OR 3.

CONNECTION DETAILS

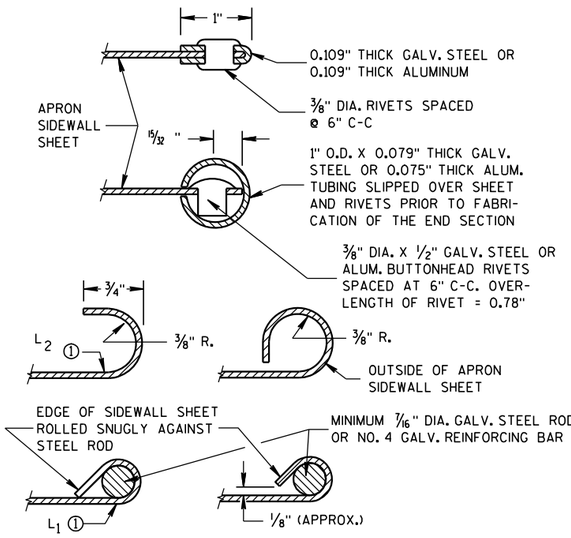

SECTION A-A

GENERAL NOTES

DETAILS OF CONSTRUCTION, MATERIALS AND WORKMANSHIP NOT SHOWN ON THIS DRAWING SHALL CONFORM TO THE PERTINENT REQUIREMENTS OF THE STANDARD SPECIFICATIONS AND THE APPLICABLE SPECIAL PROVISIONS.

CONCRETE CULVERT ENDWALLS MAY NOT BE USED WITH GALVANIZED STEEL OR ALUMINUM CULVERT PIPE OR VISE VERSA. GALVANIZED STEEL OR ALUMINUM ENDWALLS SHALL NORMALLY BE INSTALLED ON CULVERT PIPE OF THE SAME METAL.

ALL THREE PIECE STEEL APRON ENDWALLS FOR 60" DIAMETER PIPE AND LARGER SHALL HAVE 0.109" SIDES AND 0.138" CENTER PANELS. ALL THREE PIECE ALUMINUM APRON ENDWALLS FOR 60" DIAMETER PIPE AND LARGER SHALL HAVE 0.105" SIDES AND 0.134" CENTER PANELS. THE WIDTH OF CENTER PANELS SHALL BE GREATER THAN 20 PERCENT OF THE PIPE PERIMETER.

LAP SEAMS SHALL BE TIGHTLY JOINED BY GALVANIZED RIVETS OR BOLTS FOR STEEL UNITS AND ALUMINUM RIVETS AND BOLTS FOR ALUMINUM UNITS. FOR THE 60" THROUGH 96" DIAMETER APRON ENDWALL SIZES, THE REINFORCED EDGES AND CENTER PANEL SEAMS SHALL BE FURTHER REINFORCED WITH GALVANIZED STEEL OR ALUMINUM STIFFENER ANGLES. THE ANGLES SHALL BE ATTACHED BY GALVANIZED NUTS AND BOLTS FOR STEEL UNITS AND ALUMINUM NUTS AND BOLTS FOR ALUMINUM UNITS.

WHERE TWO OR MORE PIPES WITH APRON ENDWALLS ARE LAID ADJACENT TO EACH OTHER, THEY SHALL BE SEPARATED BY A DISTANCE SUFFICIENT TO PROVIDE A MINIMUM CLEARANCE OF 6 INCHES BETWEEN APRON ENDWALLS.

① FOR PIPE SIZES UP TO 60" DIAMETER, A 180° ROLLED EDGE MAY BE USED INSTEAD OF STEEL ROD REINFORCEMENT. SEE SECTION A-A.

APRON ENDWALLS FOR CULVERT PIPE

STATE OF WISCONSIN
DEPARTMENT OF TRANSPORTATION

APPROVED
11/30/94 DATE
/S/ Rory L. Rhinesmith
CHIEF ROADWAY DEVELOPMENT ENGINEER
FHWA

6
S.D.D. 8 F 1-11

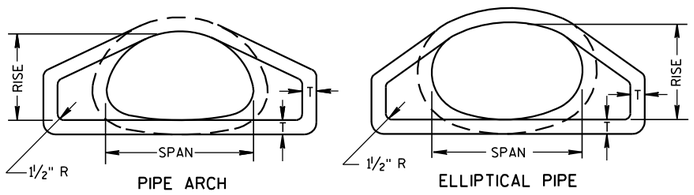

END VIEW

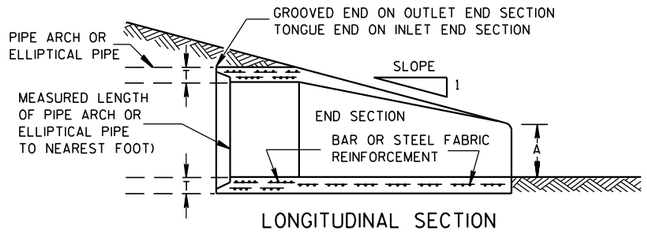

LONGITUDINAL SECTION

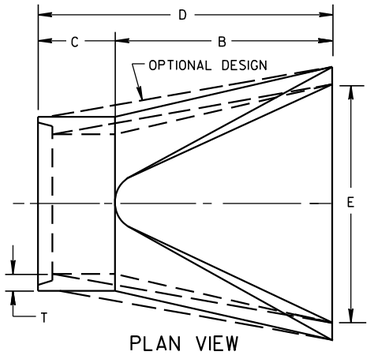

PLAN VIEW

CONCRETE ENDWALLS

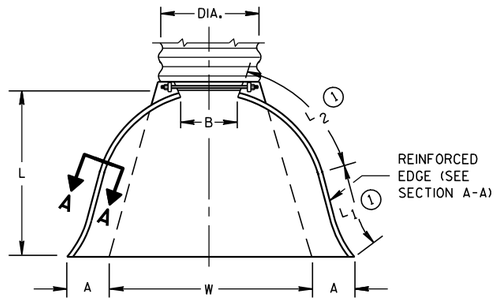

PLAN VIEW

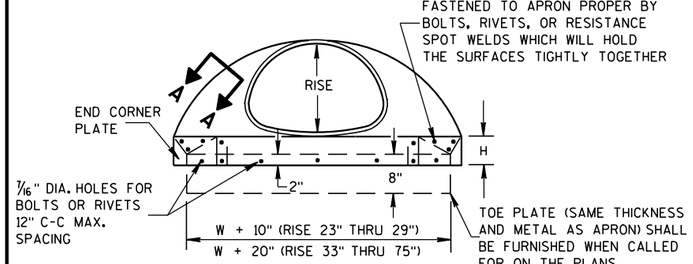

END VIEW

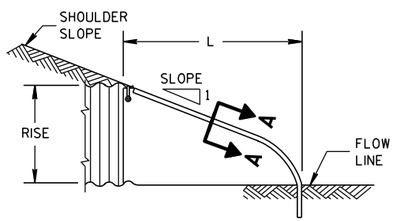

SIDE ELEVATION

METAL ENDWALLS

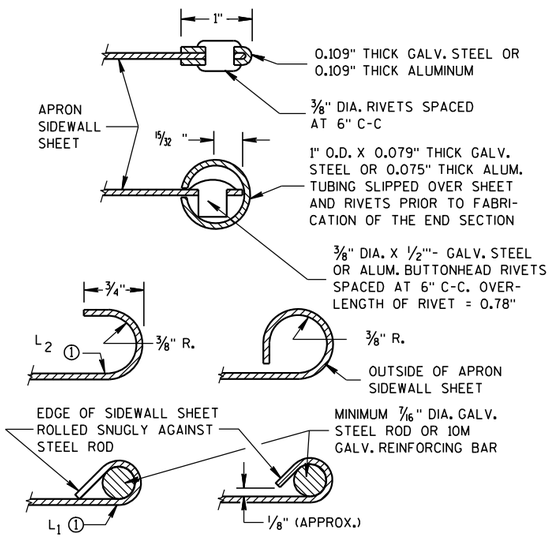

SECTION A-A

2- 2/3" X 1/2" CORRUGATIONS

EQUIV. DIA. (Inches)	(Inches) SPAN	(Inches) RISE	MIN. THICK. (Inches) STEEL	MIN. THICK. (Inches) ALUM.	DIMENSIONS (Inches) A (±1")	B (MAX.)	H (±1")	L (±1 1/2")	L1 ①	L2 ①	W (±2")	APPROX. SLOPE	BODY
15	17	13	.064	.060	7	9	6	19	14	16	30	2½ to 1	1 Pc.
18	21	15	.064	.060	7	10	6	23	14	19⅜	36	2½ to 1	1 Pc.
21	24	18	.064	.060	8	12	6	28	18	21¾	42	2½ to 1	1 Pc.
24	28	20	.064	.060	9	14	6	32	18	27½	48	2½ to 1	1 Pc.
30	35	24	.079	.075	10	16	6	39	18	37⅝	60	2½ to 1	1 Pc.
36	42	29	.079	.075	12	18	8	46	24	45⅜	75	2½ to 1	1 Pc.
42	49	33	.109	.105	13	21	9	53	24	54¾	85	2½ to 1	2 Pc.
48	57	38	.109	.105	18	26	12	63	24	68	90	2½ to 1	3 Pc.
54	64	43	.109	.105	18	30	12	70	24	72¾	102	2¼ to 1	3 Pc.
60	71	47	.109*	.105*	18	33	12	77	30	82¼	114	2¼ to 1	3 Pc.
66	77	52	.109*	.105*	18	36	12	77	—	—	126	2 to 1	3 Pc.
72	83	57	.109*	.105*	18	39	12	77	—	—	138	2 to 1	3 Pc.

3" X 1" CORRUGATIONS

EQUIV. DIA. (Inches)	(Inches) SPAN	(Inches) RISE	MIN. THICK. (Inches) STEEL	MIN. THICK. (Inches) ALUM.	DIMENSIONS (Inches) A (±1")	B (MAX.)	H (±1")	L (±1 1/2")	L1 ①	L2 ①	W (±2")	APPROX. SLOPE	BODY
48	53	41	.109	.105	18	26	12	63	24	72¾	90	2½ to 1	2 Pc.
54	60	46	.109	.105	18	30	12	70	30	82¼	102	2 to 1	2 Pc.
60	66	51	.109*	.105*	18	33	12	77	—	—	114	1½ to 1	3 Pc.
66	73	55	.109*	.105*	18	36	12	77	—	—	126	1½ to 1	3 Pc.
72	81	59	.109*	.105*	18	39	12	77	—	—	138	2 to 1	3 Pc.
78	87	63	.109*	.105*	22	38	12	77	—	—	148	1½ to 1	3 Pc.
84	95	67	.109*	.105*	22	34	12	77	—	—	162	1½ to 1	3 Pc.
90	103	71	.109*	.105*	22	38	12	77	—	—	174	1½ to 1	3 Pc.
96	112	75	.109*	.105*	24	40	12	77	—	—	174	1½ to 1	3 Pc.

NOTE: ALL SPLICES TO BE LAP RIVETED OR BOLTED.

* EXCEPT CENTER PANEL SEE GENERAL NOTES

REINFORCED CONCRETE PIPE ARCH

EQUIV. DIA. (Inches)	DIMENSIONS (Inches) ** SPAN	** RISE	T	A	B	C	D	E	APPROX. SLOPE
24	29	18	3	8½	39	33	72	48	3 to 1
30	36	22	3½	9½	50	46	96	60	3 to 1
36	44	27	4	11⅛	60	36	96	72	3 to 1
42	51	31	4½	15 13/16	60	36	96	78	3 to 1
48	58	36	5	21	60	36	96	84	3 to 1
54	65	40	5½	25½	60	36	96	90	3 to 1
60	73	45	6	31	60	36	96	96	3 to 1
72	88	54	7	31	60	39	99	120	2 to 1
84	102	62	8	28½	83	19	102	144	2 to 1

REINFORCED CONCRETE ELLIPTICAL PIPE

EQUIV. DIA. (Inches)	DIMENSIONS (Inches) ** SPAN	** RISE	T	A	B	C	D	E	APPROX. SLOPE
24	30	19	3¼	8½	39	33	72	48	3 to 1
30	38	24	3¾	9½	54	18	72	60	3 to 1
36	45	29	4½	11⅛	60	24	84	72	2½ to 1
42	53	34	5	15¾	60	36	96	78	2½ to 1
48	60	38	5½	21	60	36	96	84	2½ to 1
54	68	43	6	25½	60	36	96	90	2½ to 1
60	76	48	6½	30	60	36	96	96	2½ to 1

**NOMINAL SIZE

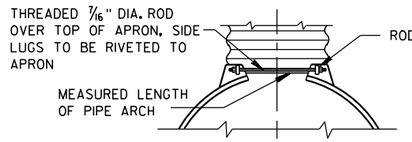

TYPE 2

FOR 17" X 13" THRU 112" X 75" PIPE ARCH

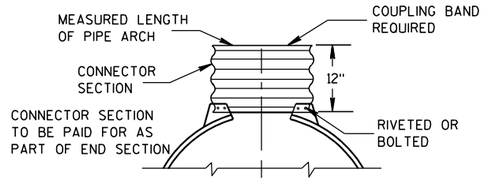

TYPE 3

FOR 64" X 43" THRU 112" X 75" PIPE ARCH

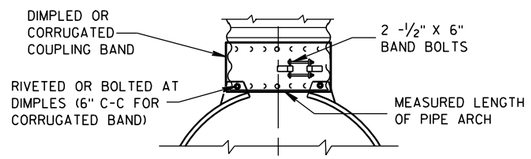

TYPE 5

ALTERNATE FOR:

ALL SIZES CORRUGATED PIPE ARCHES

NOTE: DIMPLED BAND FITS OVER OUTSIDE OF ENDWALL, AND CORRUGATED BAND FITS INSIDE ENDWALL.

CONNECTION DETAILS

GENERAL NOTES

DETAILS OF CONSTRUCTION, MATERIALS AND WORKMANSHIP NOT SHOWN ON THIS DRAWING SHALL CONFORM TO THE PERTINENT REQUIREMENTS OF THE STANDARD SPECIFICATIONS AND THE APPLICABLE SPECIAL PROVISIONS.

CONCRETE APRON ENDWALLS MAY NOT BE USED WITH GALVANIZED STEEL OR ALUMINUM CULVERT PIPE OR VISE VERSA. GALVANIZED STEEL OR ALUMINUM APRON ENDWALLS SHALL NORMALLY BE INSTALLED ON CULVERT PIPE OF THE SAME METAL.

ALL THREE PIECE STEEL APRON ENDWALLS FOR 66" X 51" PIPE ARCH AND LARGER SHALL HAVE 0.109" SIDES AND 0.138" CENTER PANELS. ALL THREE PIECE ALUMINUM APRON ENDWALLS FOR 66" X 51" PIPE ARCH AND LARGER SHALL HAVE 0.105" SIDES AND 0.134" CENTER PANELS. THE WIDTH OF CENTER PANELS SHALL BE GREATER THAN 20 PERCENT OF THE PIPE ARCH PERIMETER.

LAP SEAMS SHALL BE TIGHTLY JOINED BY GALVANIZED RIVETS OR BOLTS FOR STEEL UNITS AND ALUMINUM RIVETS AND BOLTS FOR ALUMINUM UNITS. FOR THE 77" X 52" THROUGH 112" X 75" APRON ENDWALL SIZES, THE REINFORCED EDGES AND CENTER PANEL SEAMS SHALL BE FURTHER REINFORCED WITH GALVANIZED STEEL OR ALUMINUM STIFFENER ANGLES. THE ANGLES SHALL BE ATTACHED BY GALVANIZED NUTS AND BOLTS FOR STEEL UNITS AND ALUMINUM NUTS AND BOLTS FOR ALUMINUM UNITS.

WHERE TWO OR MORE PIPES WITH APRON ENDWALLS ARE LAID ADJACENT TO EACH OTHER, THEY SHALL BE SEPARATED BY A DISTANCE SUFFICIENT TO PROVIDE A MINIMUM CLEARANCE OF 6 INCHES BETWEEN APRON ENDWALLS.

① FOR PIPE ARCH SIZES UP TO 73" X 55" A 180° ROLLED EDGE MAY BE USED INSTEAD OF STEEL ROD REINFORCEMENT. SEE SECTION A-A.

APRON ENDWALLS FOR PIPE ARCH AND ELLIPTICAL PIPE

STATE OF WISCONSIN
DEPARTMENT OF TRANSPORTATION

APPROVED

11/30/94 — DATE

/S/ Rory L. Rhinesmith — CHIEF ROADWAY DEVELOPMENT ENGINEER

FHWA

6

S.D.D. 8 F 2-1

6

S.D.D. 8 F 2-1

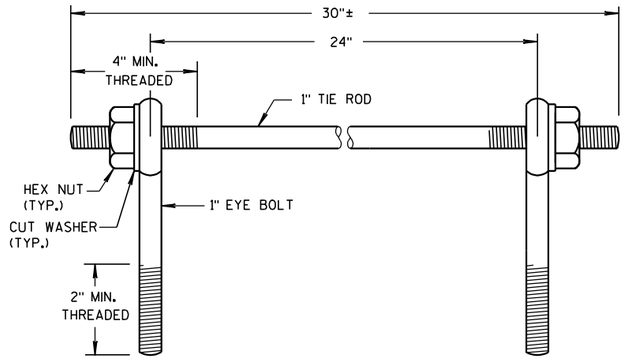

EYE BOLTS AND TIE ROD

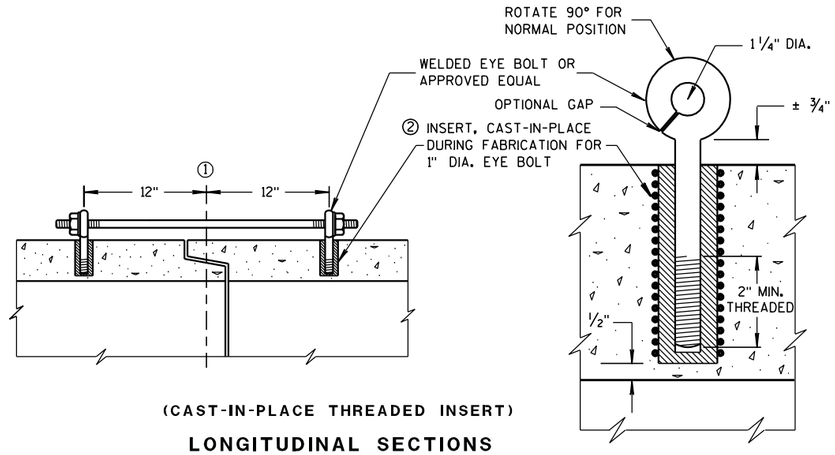

(CAST-IN-PLACE THREADED INSERT)

LONGITUDINAL SECTIONS

EYE BOLT AND TIE ROD ASSEMBLY (ALTERNATE NO. 1)

GENERAL NOTES

DETAILS OF CONSTRUCTION, MATERIALS, AND WORKMANSHIP NOT SHOWN ON THIS DRAWING SHALL CONFORM TO THE PERTINENT REQUIREMENTS OF THE STANDARD SPECIFICATIONS AND APPLICABLE SPECIAL PROVISIONS.

CONCRETE CULVERT AND STORM SEWER PIPE SHALL BE TIED TOGETHER IN THE MANNER ILLUSTRATED BY THIS DETAIL AT LOCATIONS DESIGNATED IN THE STANDARD SPECIFICATIONS AND THE PLAN. THE CONTRACTOR MAY USE EITHER ALTERNATE 1, 2 OR 3 FOR DRAINAGE STRUCTURES. ONLY ALTERNATE 1 AND 3 MAY BE USED FOR CATTLE PASSES, UNLESS OTHERWISE STATED IN THE CONTRACT. THE MATERIALS, FABRICATION AND WORK NECESSARY TO TIE THE PIPE BY THIS DETAIL WILL BE CONSIDERED INCIDENTAL TO THE PIPE AND APRON ENDWALLS IF REQUIRED.

DETAILED DRAWINGS FOR PROPOSED ALTERNATE DESIGNS FOR JOINT TIES SHALL BE SUBMITTED TO THE ENGINEER FOR APPROVAL.

JOINT TIES TO BE HOT-DIP GALVANIZED PER ASTM A 153.

① ℄ OF TONGUE AND GROOVE OR BELL AND SPIGOT JOINTS.

② THE INSIDE OF THE THREADED INSERTS SHALL BE CLEAN TO ALLOW THE INSERTION OF THREADED EYE BOLTS.

③ HOLES SHALL BE CAST-IN-PLACE OR DRILLED 12 INCHES FROM ℄ OF TONGUE AND GROOVE.

④ BOLT PROJECTION INSIDE OF PIPE SHALL NOT EXCEED 2 INCHES.

⑤ OPENING TO BE ROD DIAMETER PLUS 1 INCH.

⑥ LENGTH ADEQUATE TO EXTEND TO WITHIN 1/2 INCH OF THE INNER SURFACE OF THE PIPE.

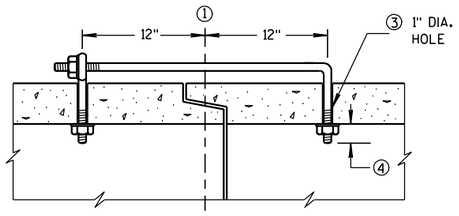

(TONGUE & GROOVE PIPE)

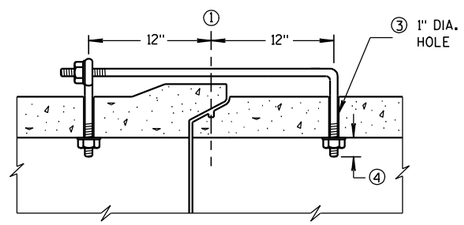

(MODIFIED BELL PIPE)

LONGITUDINAL SECTION

EYE BOLT DIMENSION TABLE

PIPE SIZE	L = LENGTH	
	TONGUE & GROOVE PIPE	MODIFIED BELL PIPE
18" TO 24"	4 1/2"	6 1/4"
30"	5"	7"
36"	5 1/2"	7"
42"	6"	
48"	6 1/2"	
60"	7 1/2"	
66"	8"	

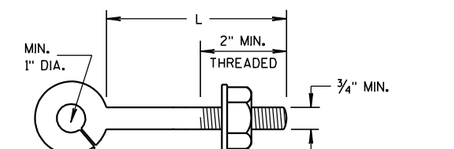

NOTE:

EYE BOLT

NOTE: TWO EYE BOLTS MAY BE USED WITH A 30" LONG THREADED ROD IN LIEU OF THE 90° BENT TIE ROD.

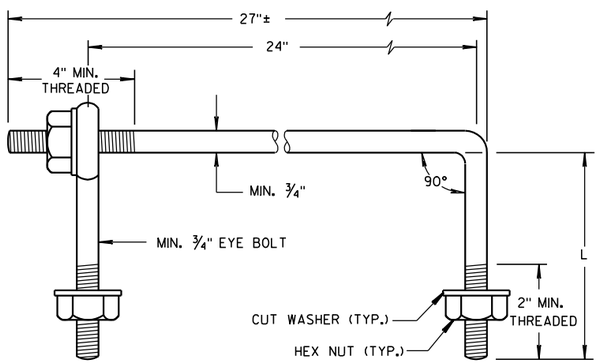

EYE BOLT AND TIE ROD

(JOINT TIES FOR 18" TO 66" DIA. CONCRETE PIPE)

EYE BOLT AND TIE ROD ASSEMBLY (ALTERNATE NO. 2)

ADJUSTABLE TIE ROD TABLE

PIPE DIAMETER	TIE ROD DIAMETER	D	L_1	N
12-60	5/8	5/8	5	1/2
66-84	3/4	3/4	5	1/2
90-108	1	1	7	1 1/16

DIMENSIONS SHOWN ARE IN INCHES

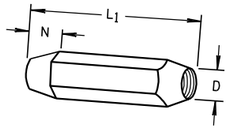

TAPERED

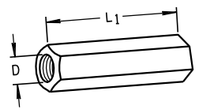

PLAIN

RIGHT AND LEFT THREADS

SLEEVE NUTS

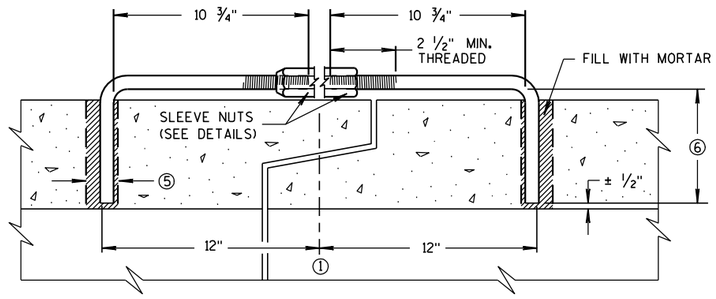

LONGITUDINAL SECTION

(JOINT TIES FOR 12" TO 108" DIA. CONCRETE PIPE)

ADJUSTABLE TIE ROD (ALTERNATE NO. 3)

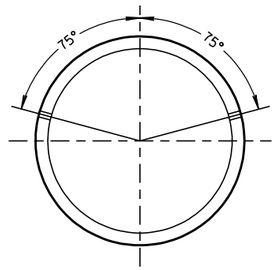

PLACEMENT OF (2) CAST-IN-PLACE INSERTS OR HOLES DURING FABRICATION FOR PIPE SECTIONS REQUIRING TIE RODS

TRANSVERSE SECTION

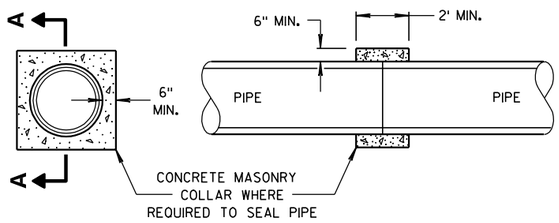

SECTION A-A

CONCRETE COLLAR DETAIL

JOINT TIES FOR CONCRETE PIPE AND CONCRETE COLLAR DETAIL

STATE OF WISCONSIN
DEPARTMENT OF TRANSPORTATION

APPROVED
6/5/2012 — DATE
/S/ Jerry H. Zogg — ROADWAY STANDARDS ENGINEER
FHWA

6

S.D.D. 8 F 4-7

6

S.D.D. 8 F 4-7

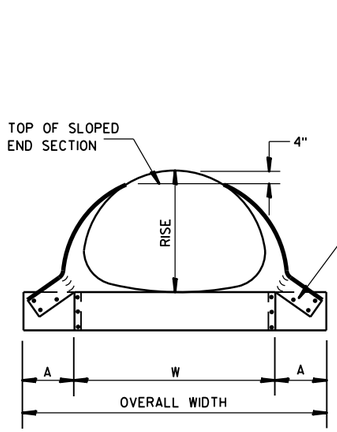

FRONT VIEW

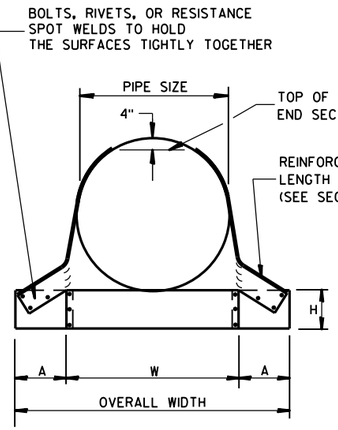

FRONT VIEW

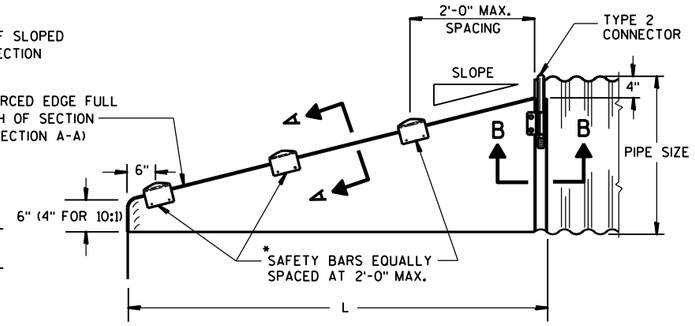

SIDE VIEW

GENERAL NOTES

DETAILS OF CONSTRUCTION, MATERIALS AND WORKMANSHIP NOT SHOWN ON THIS DRAWING SHALL CONFORM TO THE PERTINENT REQUIREMENTS OF THE STANDARD SPECIFICATIONS AND THE APPLICABLE SPECIAL PROVISIONS.

SLOPED END SECTIONS SHALL CONFORM TO THE REQUIREMENTS OF THE STANDARD SPECIFICATIONS, SECTION 521 FOR STEEL APRON ENDWALLS.

SAFETY BARS SHALL BE FABRICATED FROM GALVANIZED STEEL PIPE MEETING THE REQUIREMENTS OF ASTM A-53, GRADE B, SCHEDULE 40 OR APPROVED EQUAL.

STEEL APRON ENDWALLS FOR CULVERT PIPE SLOPED SIDE DRAINS

PIPE DIA. (IN.)	MIN. THICK. (Inches)	DIMENSIONS (Inches)				L DIMENSIONS					
		A	H	W	OVERALL WIDTH	SLOPE	LENGTH INCHES	SLOPE	LENGTH INCHES	SLOPE	LENGTH INCHES
15	.064	8	6	21	37	4:1	20	6:1	30	10:1	70
18	.064	8	6	24	40	4:1	32	6:1	48	10:1	100
21	.064	8	6	27	43	4:1	44	6:1	66	10:1	130
24	.064	8	6	30	46	4:1	56	6:1	84	10:1	160
30	.109	12	9	36	60	4:1	80	6:1	120	10:1	220
36	.109	12	9	42	66	4:1	104	6:1	156	10:1	280
42	.109	16	12	48	80	4:1	128	6:1	192	——	——
48	.109	16	12	54	86	4:1	152	6:1	228	——	——
54	.109	16	12	60	92	4:1	176	6:1	264	——	——
60	.109	16	12	66	98	4:1	200	6:1	300	——	——

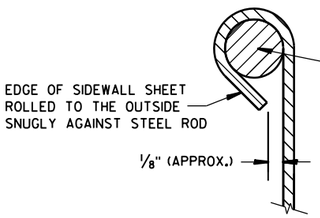

SECTION A-A

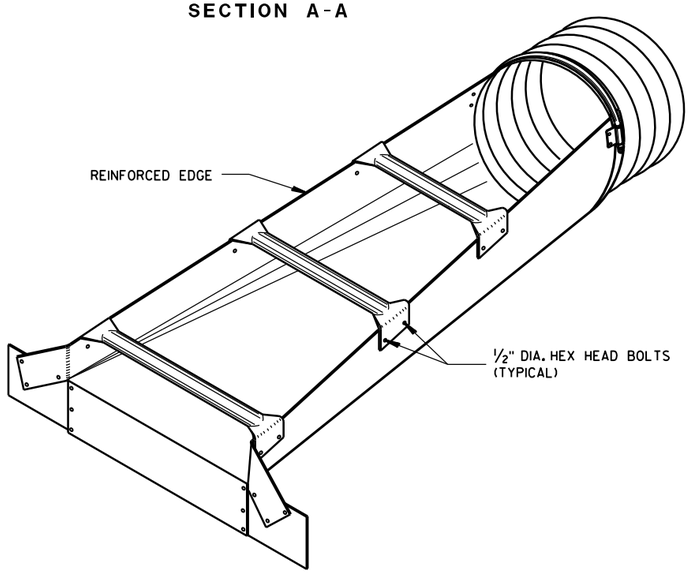

ISOMETRIC VIEW

*NOTE:
THREE SAFETY BARS ARE SHOWN. ACTUAL NUMBER OF BARS REQUIRED AT A 2'-0" C-C MAX. SPACING WILL VARY DEPENDING ON THE LENGTH OF THE END SECTION.

3" GALVANIZED PIPE. FLATTEN ENDS, THEN BEND OUTSIDE 4" TO MATCH END SECTION SIDES.

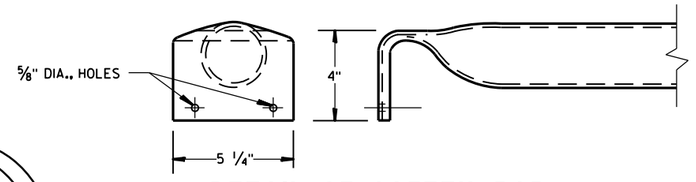

DETAIL OF SAFETY BAR

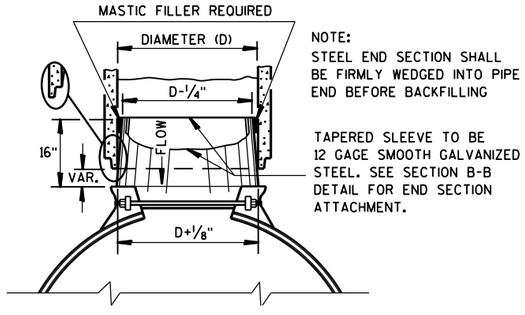

STEEL ADAPTER SLEEVE FOR CONCRETE PIPE

STEEL APRON ENDWALLS FOR PIPE ARCH SLOPED SIDE DRAINS

EQUIV. DIA. (Inches)	(Inches) SPAN	(Inches) RISE	MIN. THICK. (Inches) ①	DIMENSIONS (Inches) A	H	W	OVERALL WIDTH	L DIMENSIONS SLOPE	LENGTH INCHES	SLOPE	LENGTH INCHES	SLOPE	LENGTH INCHES
15	17	13	.064 *	7	6	30	44	4:1	19	6:1	30	10:1 ②	70
18	21	15	.064 *	8	6	27	43	4:1	20	6:1	30	10:1	70
21	24	18	.064 *	8	6	30	46	4:1	32	6:1	48	10:1	100
24	28	20	.064 *	8	6	34	50	4:1	40	6:1	60	10:1	120
30	35	24	.079 *	12	9	41	65	4:1	56	6:1	84	10:1	160
36	42	29	.109 *	12	9	48	72	4:1	76	6:1	114	10:1	210
42	49	33	.109	16	12	55	87	4:1	92	6:1	138	——	——
48	57	38	.109	16	12	63	95	4:1	112	6:1	168	——	——
54	64	43	.109	16	12	70	102	4:1	132	6:1	198	——	——

① * MINIMUM THICKNESS OF ALL 10:1 SLOPED SIDE DRAINS IS 0.109".
② ACTUAL SLOPE GREATER THAN 10:1.

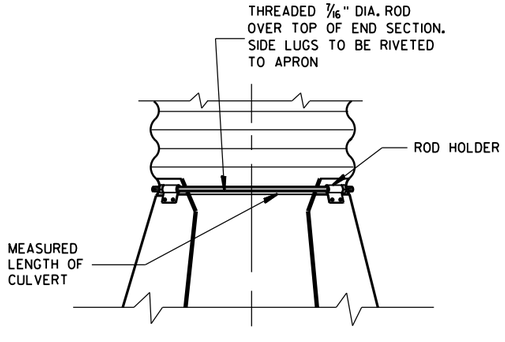

TYPE 2 CONNECTION DETAIL

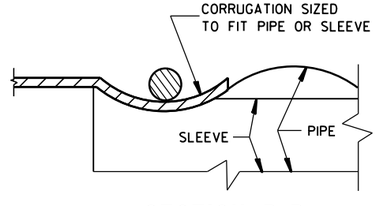

SECTION B-B

STEEL APRON ENDWALLS FOR CULVERT PIPE AND PIPE ARCH SLOPED SIDE DRAINS

STATE OF WISCONSIN
DEPARTMENT OF TRANSPORTATION

APPROVED
9/14/2012 DATE
/S/ Jerry H. Zoda
ROADWAY STANDARDS DEVELOPMENT ENGINEER
FHWA

6

S.D.D. 8 F 7-5

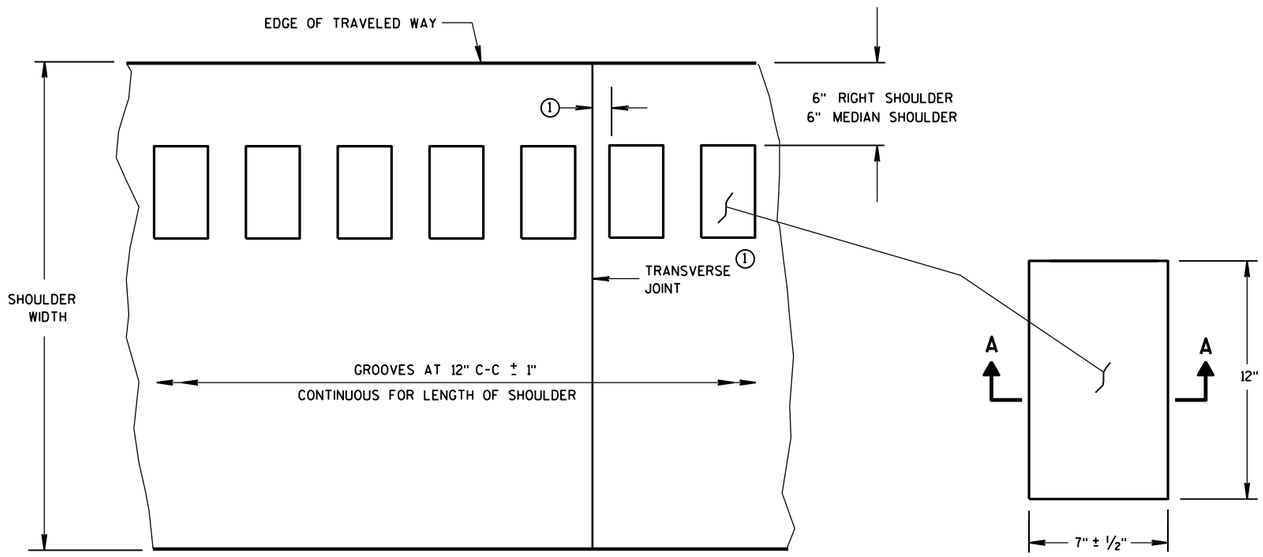

PLAN VIEW
SHOULDER WITH GROOVES

PLAN VIEW
(SINGLE GROOVE)

PLACEMENT DETAIL FOR MILLED RUMBLE STRIP

GENERAL NOTES

DETAILS OF CONSTRUCTION SHOWN ON THIS DRAWING SHALL CONFORM TO THE PERTINENT REQUIREMENTS OF THE STANDARD SPECIFICATIONS AND APPLICABLE SPECIAL PROVISIONS.

RUMBLE STRIPS ON EXPRESSWAYS

DO NOT INSTALL RUMBLE STRIPS ACROSS SIDE ROAD INTERSECTIONS, COMMERCIAL DRIVEWAYS, PRIVATE DRIVEWAYS OR ADJACENT TO RIGHT TURN LANES, LEFT TURN LANES, TURN LANE TAPERS, BRIDGE DECKS, BRIDGE APPROACHES, OR 100 FEET IN ADVANCE OF RAILROAD CROSSING. THE ATTACHED STANDARD DETAIL DRAWING SHOWS THE LOCATION OF THE RUMBLE STRIPS AT INTERCHANGE AREAS.

(1) CONCRETE PAVEMENT - RUMBLE STRIPS SHALL BE A MINIMUM OF 6" AWAY FROM TRANSVERSE JOINTS.

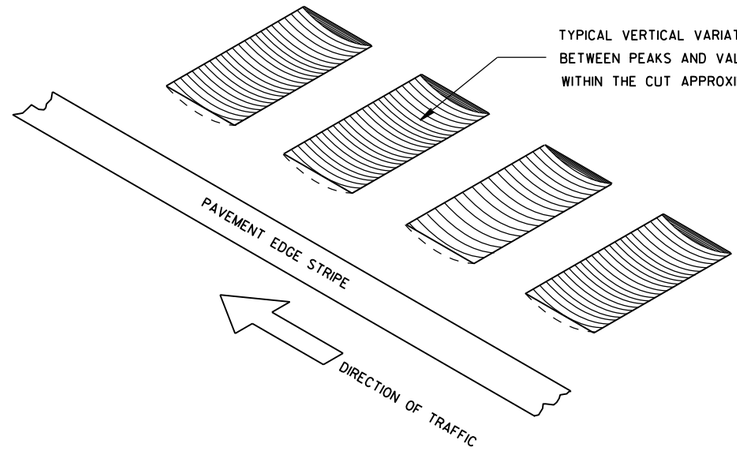

ISOMETRIC

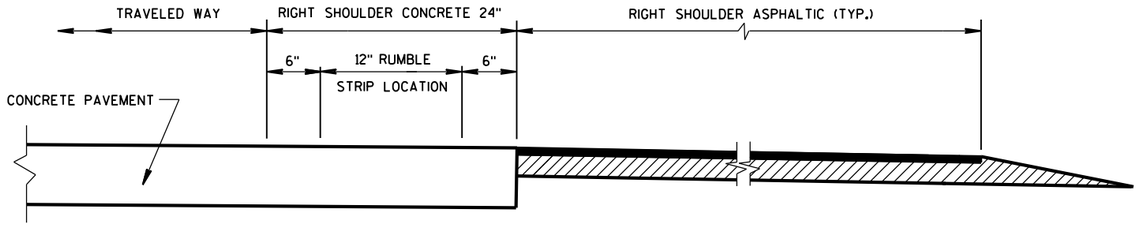

SECTION VIEW
CONCRETE PAVEMENT EXTENDS INTO RIGHT SHOULDER)

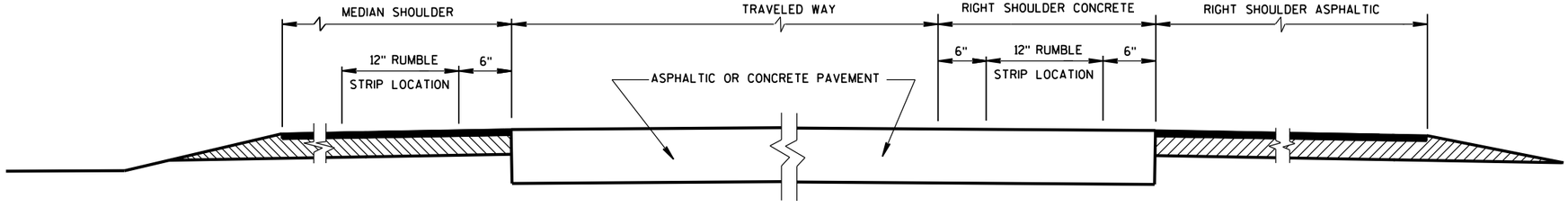

SECTION VIEW

TYPICAL LOCATIONS OF SHOULDER RUMBLE STRIPS IN RURAL DIVIDED HIGHWAYS

(ONE ROADWAY IS SHOWN)

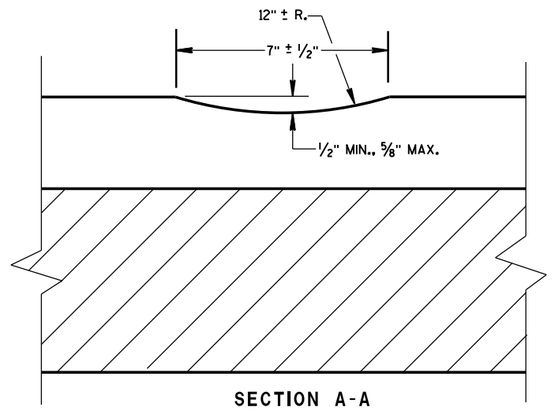

SECTION A-A

SHOULDER RUMBLE STRIP, MILLING

STATE OF WISCONSIN
DEPARTMENT OF TRANSPOI

6

S.D.D. 13 A 5-5a

6

S.D.D. 13 A 5-5a

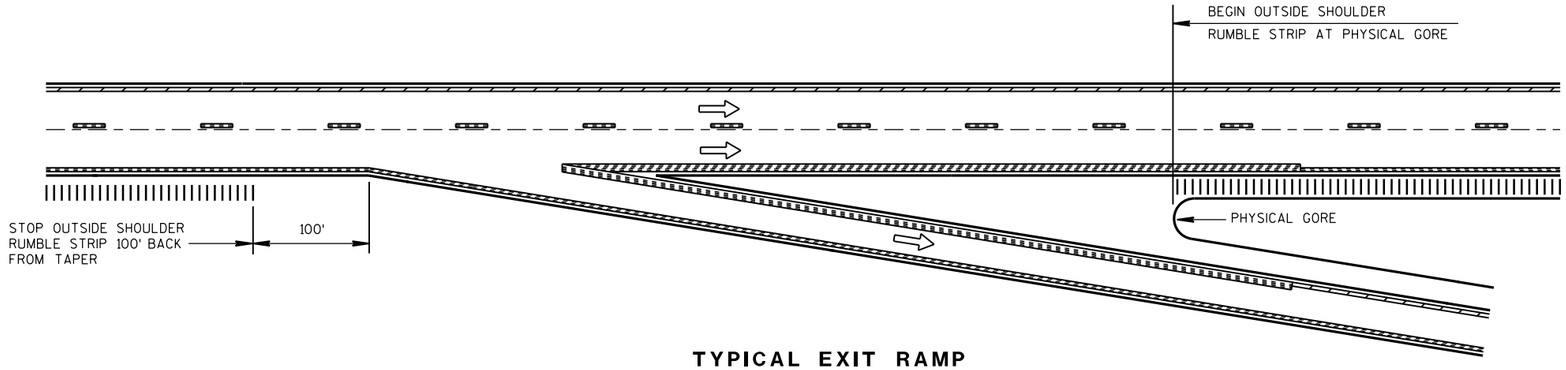

TYPICAL EXIT RAMP

NOTES:

NO RUMBLE STRIP ON EXIT, DIRECTIONAL, OR ENTRANCE RAMPS, EXCEPT NEAR THE ENTRANCE TAPER END AND ALONG THE PARALLEL RAMP AREA AS SHOWN.

PAVEMENT MARKING DETAILS AND SPECIFICATIONS ARE PROVIDED ELSEWHERE IN THE CONTRACT.

NOTE:
ARROW SYMBOL (⇨)
SHOWS DIRECTION OF TRAVEL

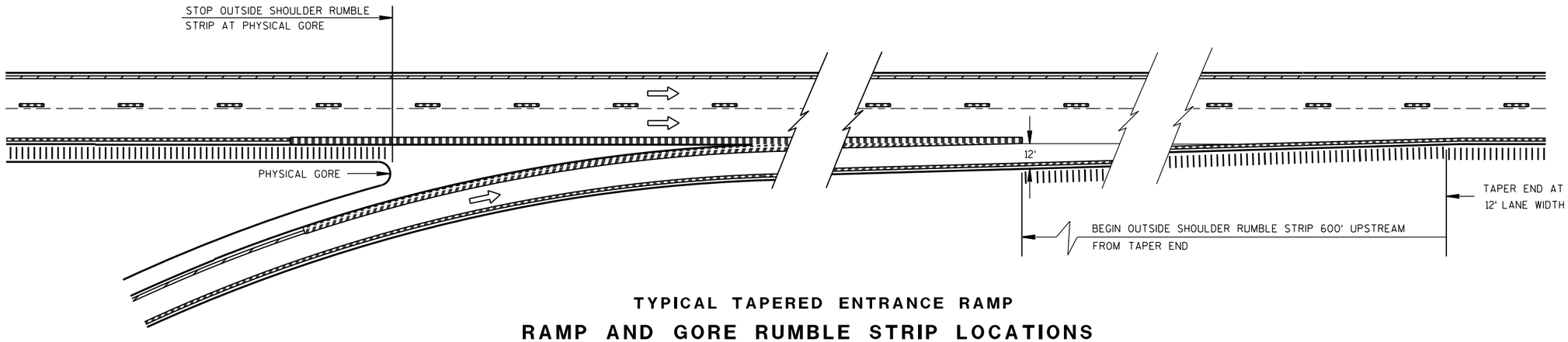

TYPICAL TAPERED ENTRANCE RAMP

RAMP AND GORE RUMBLE STRIP LOCATIONS

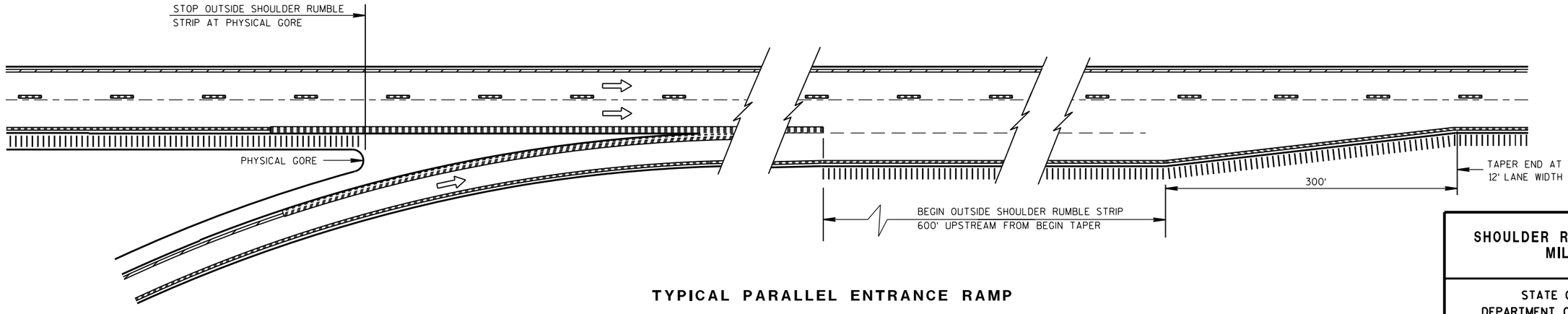

TYPICAL PARALLEL ENTRANCE RAMP

RAMP AND GORE RUMBLE STRIP LOCATIONS

SHOULDER RUMBLE STRIP, MILLING

STATE OF WISCONSIN
DEPARTMENT OF TRANSPORTATION

APPROVED

12/17/2012
DATE

/S/ Jerry H. Zoga
ROADWAY STANDARDS ENGINEER

FHWA

6

S.D.D. 13 A 5-5b

6

S.D.D. 13 A 5-5b

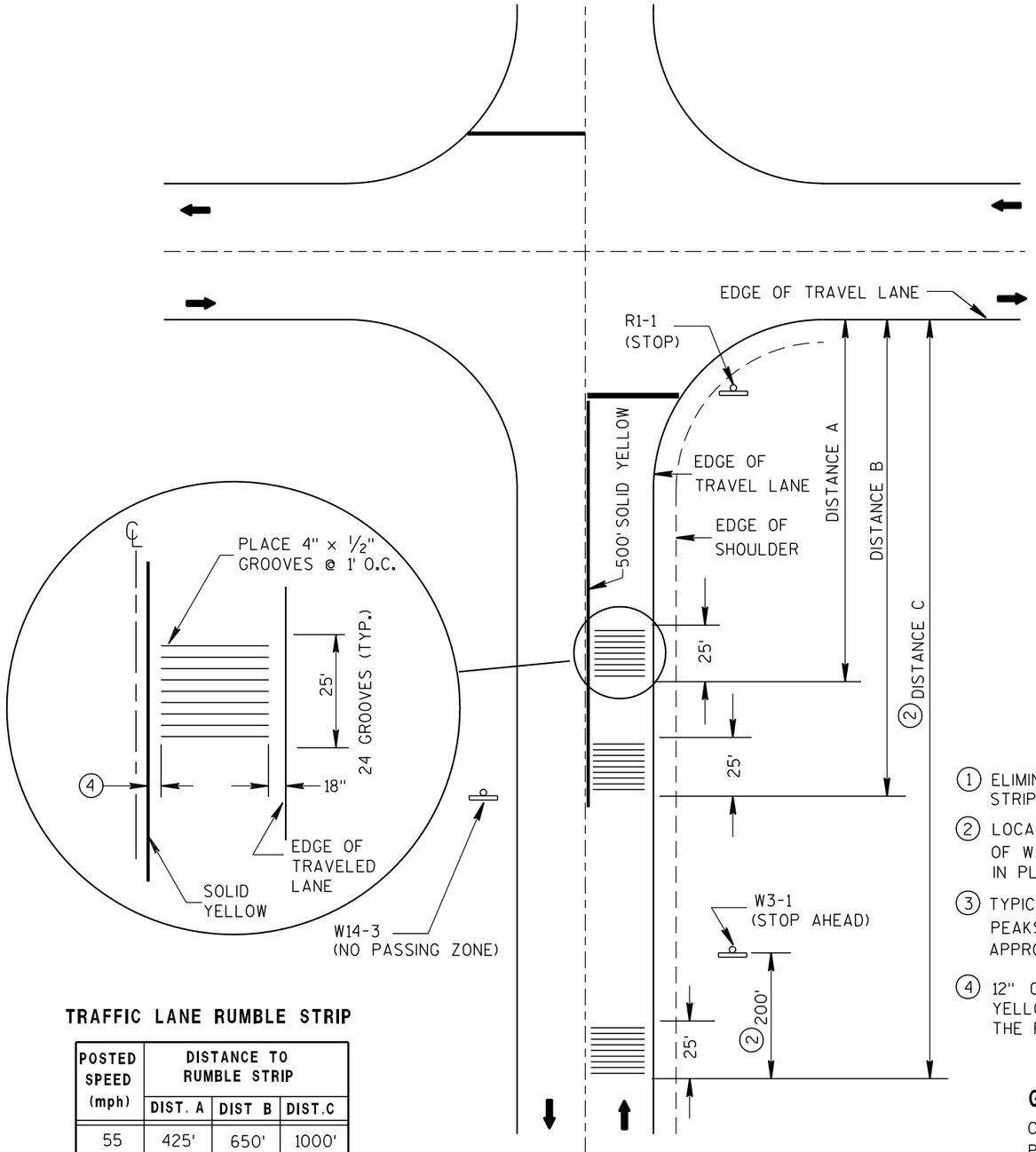

ARROW SYMBOL (➡) SHOWS DIRECTION OF TRAVEL

PLAN VIEW

RUMBLE STRIP LOCATION

TRAFFIC LANE RUMBLE STRIP

POSTED SPEED (mph)	DISTANCE TO RUMBLE STRIP		
	DIST. A	DIST B	DIST.C
55	425'	650'	1000'
50	325'	450'	800'
45	275'	400'	650'
40	225'	(1)	550'
35	175'	(1)	475'
≤ 30	125'	(1)	425'

(1) ELIMINATE THE MIDDLE SET OF RUMBLE STRIPS.

(2) LOCATE RUMBLE STRIP 200' IN ADVANCE OF W3-1 SIGN AS SHOWN. IF W3-1 IS NOT IN PLACE, USE DISTANCE C.

(3) TYPICAL VERTICAL VARIATION BETWEEN PEAKS AND VALLEYS WITHIN THE CUT APPROXIMATELY 1/16"

(4) 12" CLEAR BETWEEN THE SOLID YELLOW LINE AND THE EDGE OF THE RUMBLE.

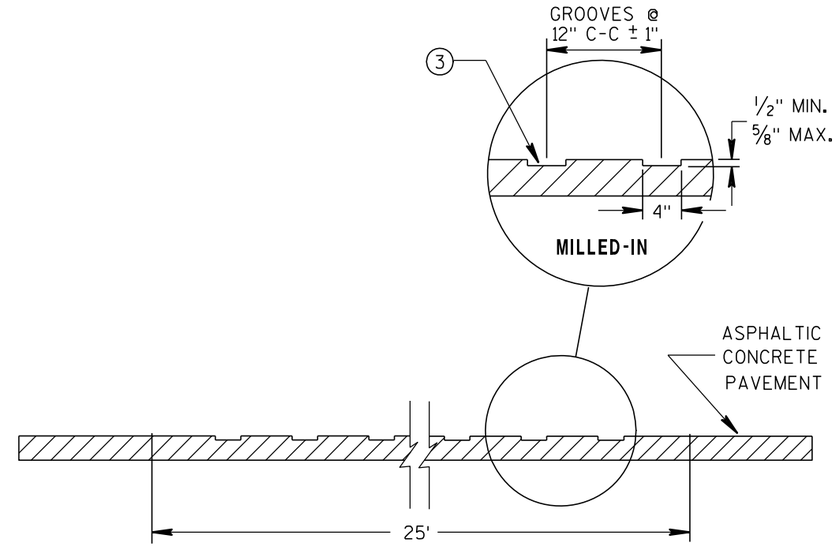

ELEVATION VIEW

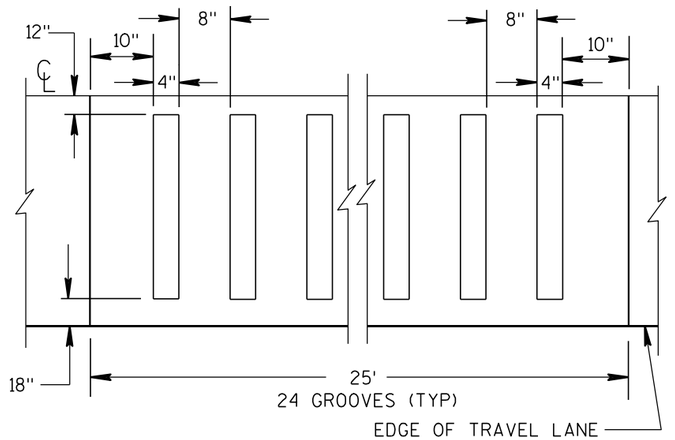

PLAN VIEW

ASPHALTIC PAVEMENT MILLED-IN

GENERAL NOTES

CONTRACTOR SHALL CONFIRM RUMBLE STRIP LOCATION WITH THE ENGINEER PRIOR TO INSTALLATION. THE ENGINEER MAY MODIFY THE RUMBLE STRIP LOCATION AS FIELD CONDITIONS DICTATE.

WHEN ASPHALTIC PAVEMENT IS NEW IN THE RUMBLE AREA THE CONTRACTOR SHALL ALLOW THE PAVEMENT TO CURE A MINIMUM OF 7 DAYS PRIOR TO RUMBLE INSTALLATION.

PAVEMENT MARKING AND SIGNING DETAILS AND SPECIFICATIONS ARE PROVIDED ELSEWHERE IN THE CONTRACT.

ASPHALTIC RUMBLE STRIPS AT INTERSECTION

STATE OF WISCONSIN
DEPARTMENT OF TRANSPORTATION

APPROVED

8/17/2011
DATE

/S/ Jerry H. Zogg
ROADWAY STANDARDS | 119
ENGINEER

FHWA

6
S.D.D. 13 A 8-1

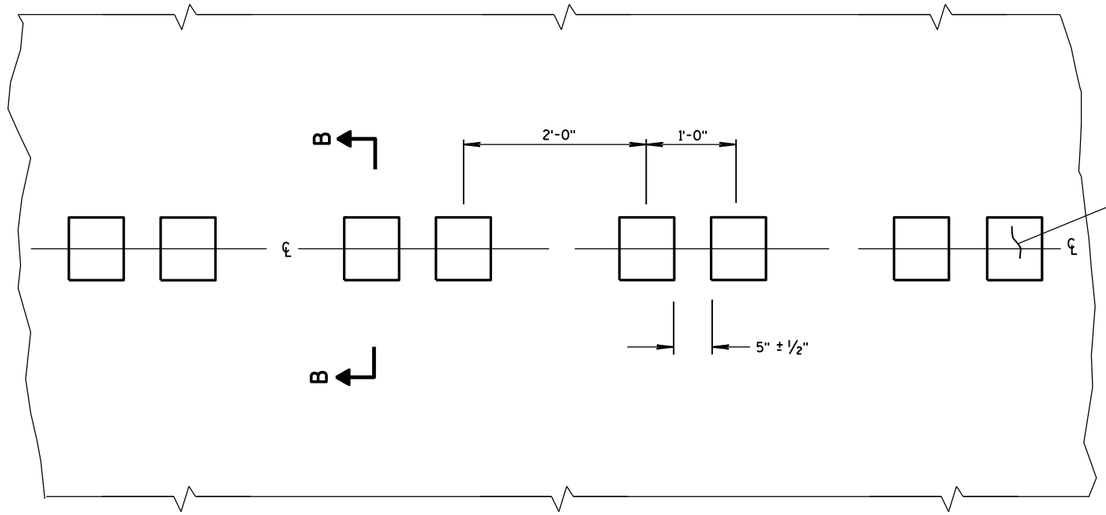

PLAN VIEW
CENTER LINE WITH GROOVES

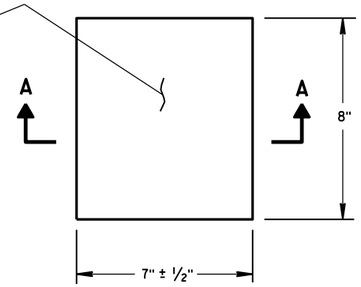

PLAN VIEW
(SINGLE GROOVE)

PLACEMENT DETAIL FOR MILLED RUMBLE STRIP

GENERAL NOTES

DETAILS OF CONSTRUCTION SHOWN ON THIS DRAWING SHALL CONFORM TO THE PERTINENT REQUIREMENTS OF THE STANDARD SPECIFICATIONS AND APPLICABLE SPECIAL PROVISIONS.

DO NOT MILL CENTER LINE GROOVES THROUGH ANY INTERSECTION, MARKED CROSSWALK, NON-MOTORIZED PATH CROSSING, OR SNOWMOBILE CROSSING.

INSTALL PAVEMENT MARKING AFTER THE GROOVES ARE INSTALLED.

SEE SIGNING PLAN FOR SIGN REQUIREMENTS THAT MAY BE NEEDED.

(1) CENTERLINE GROOVES MAY BE OMITTED IN AREAS WITH HIGH CONCENTRATIONS OF DRIVEWAYS, WHEN DIRECTED BY THE ENGINEER.

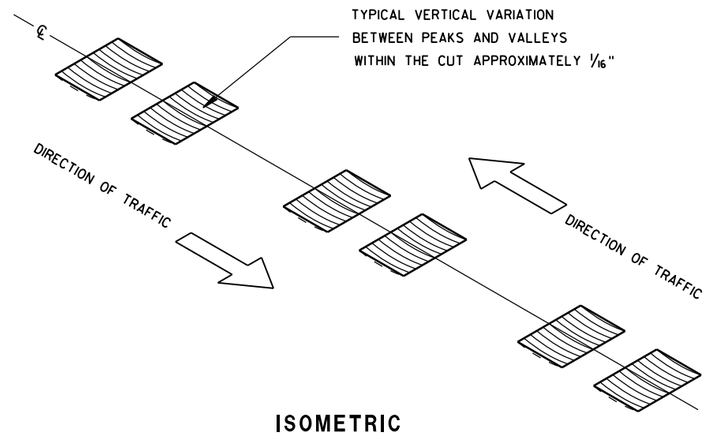

ISOMETRIC

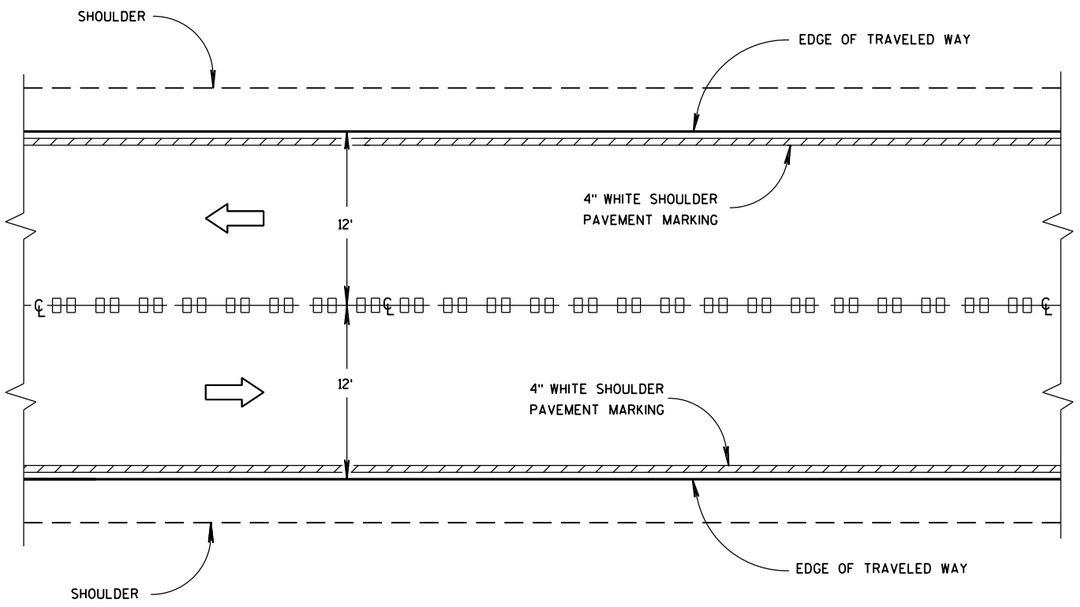

CENTER LINE GROOVES ON TWO-WAY ROADWAYS

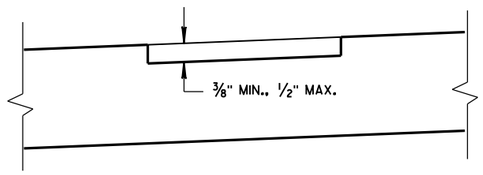

SECTION B-B
SUPERELEVATED ROADWAY

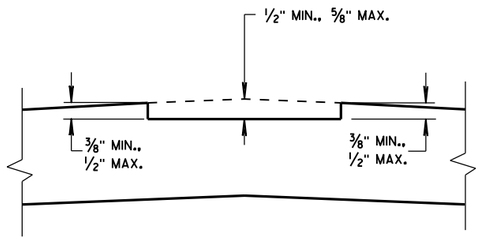

SECTION B-B
CROWNED ROADWAY

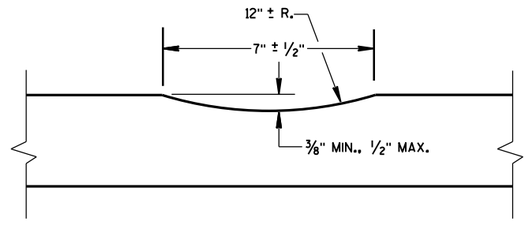

SECTION A-A

2-LANE RURAL
CENTER LINE RUMBLE STRIP, MILLING

STATE OF WISCONSIN
DEPARTMENT OF TRANSPOI

6

S.D.D. 13 A 11-2a

6

S.D.D. 13 A 11-2a

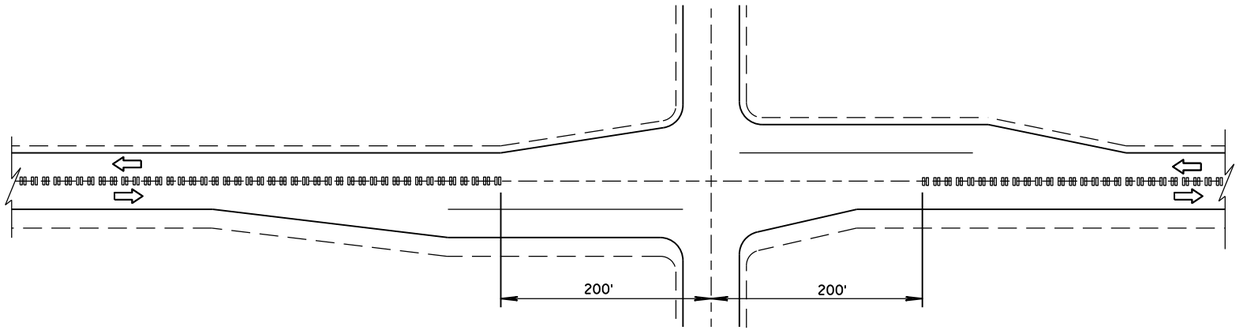

CENTER LINE GROOVES AT INTERSECTIONS

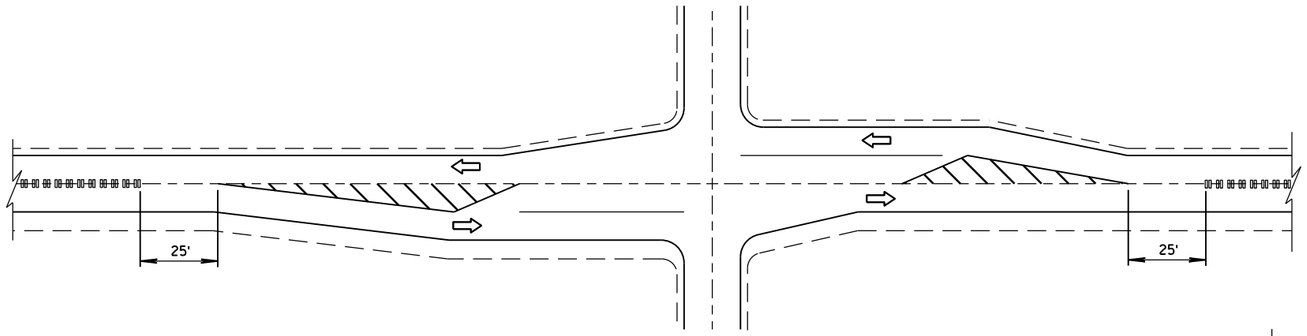

CENTER LINE GROOVES AT INTERSECTIONS
(WITH LEFT TURN LANES)

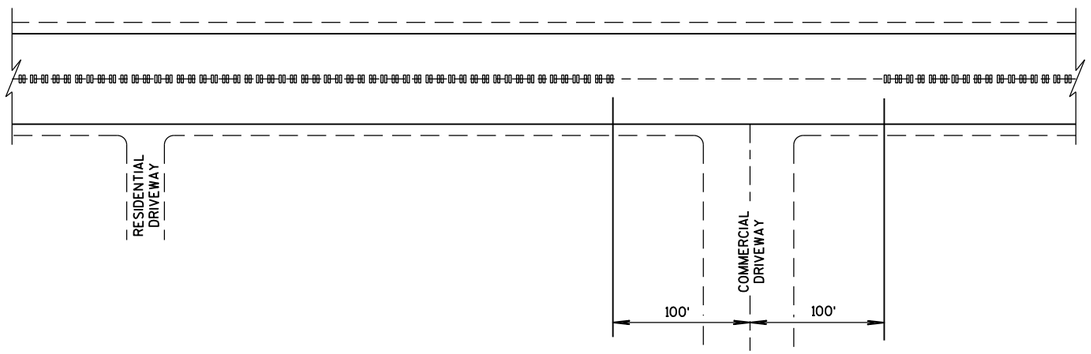

CENTER LINE GROOVES AT DRIVEWAYS (1)

(1) CENTERLINE GROOVES MAY BE OMITTED IN AREAS WITH HIGH CONCENTRATIONS OF DRIVEWAYS, WHEN DIRECTED BY THE ENGINEER.

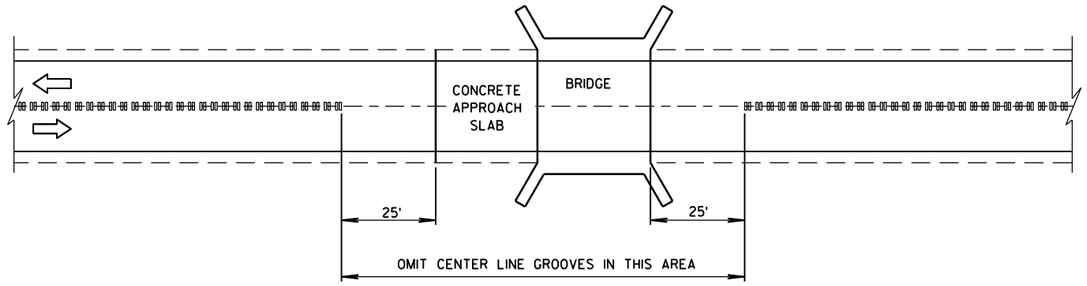

CENTER LINE GROOVES AT BRIDGES

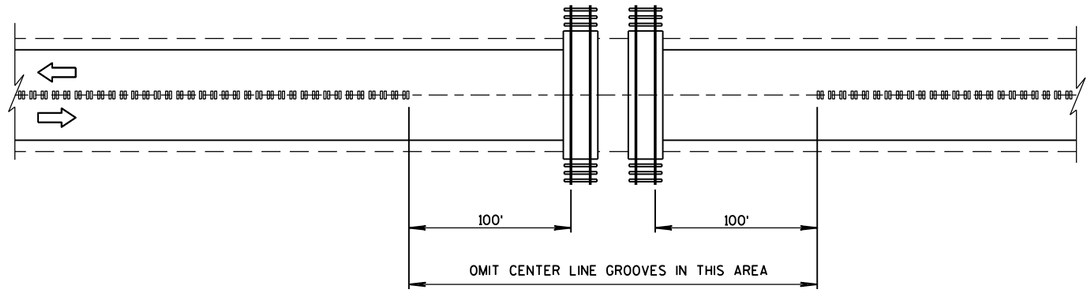

CENTER LINE GROOVES AT RAILROADS

6

S.D.D. 13 A 11-2b

6

S.D.D. 13 A 11-2b

2-LANE RURAL
CENTER LINE RUMBLE STRIP, MILLING

STATE OF WISCONSIN
DEPARTMENT OF TRANSPORTATION

APPROVED

5/15/2013 — DATE

/S/ Jerry H. Zoda — ROADWAY STANDARDS DEVELOPMENT ENGINEER

NT

FHWA

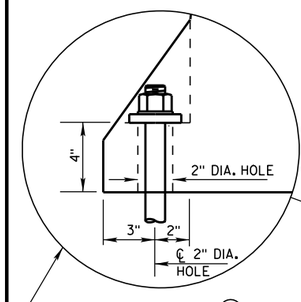

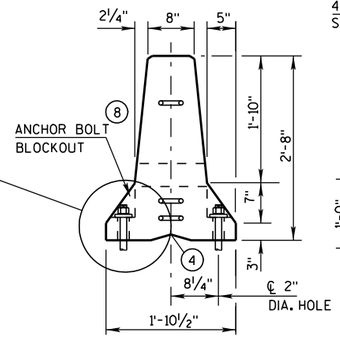

END VIEW

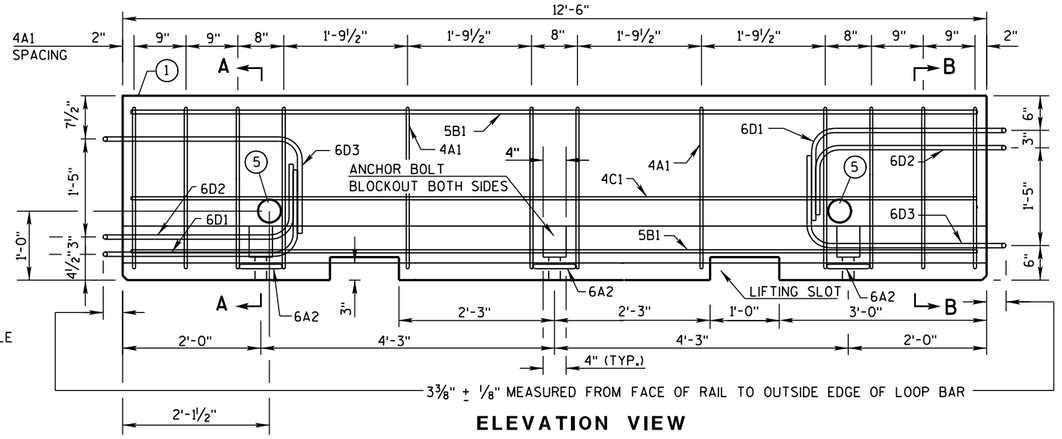

ELEVATION VIEW

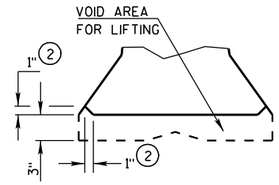

DETAIL "B"
LIFTING SLOT DETAIL

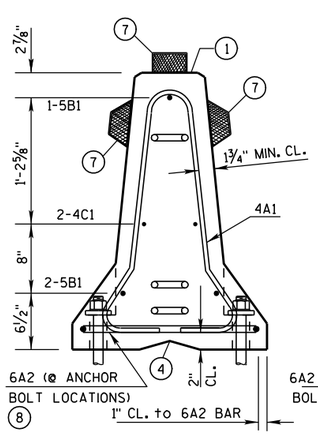

SECTION A-A
(STIRRUP PLACEMENT)

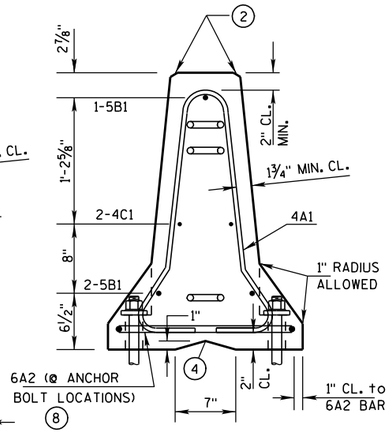

SECTION B-B
(STIRRUP PLACEMENT)

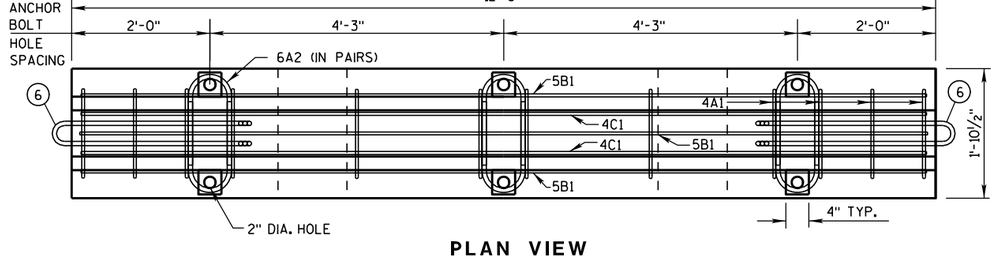

PLAN VIEW

DETAILS OF BARRIER SECTION

GENERAL NOTES

THESE GENERAL NOTES APPLY TO SHEETS 14B7-13(a) THRU 14B7-13(h).

DO NOT INTERMIX CONCRETE BARRIER TEMPORARY PRCAST, 12'-6" (CBTP12.5) WITH OTHER TEMPORARY CONCRETE BARRIERS.

USE ASTM A-615, GRADE 60, DEFORMED STEEL BARS FOR BARS 4A1, 6A2, 5B1 AND 4C1 IN THE BARRIER SECTION AND FOR 4V1, 4V2, 4V3, 4V4, 4V5, 4V6, 4F1, 4F2 AND 5F3 IN THE BARRIER TAPER SECTION.

LOOP BARS 6D1, 6D2 AND 6D3 SHALL BE ¾" SMOOTH STEEL BARS WITH A MINIMUM YIELD STRENGTH OF 60 KSI, A TENSILE STRENGTH OF NOT LESS THAN 1.25 TIMES THE YIELD STRENGTH BUT A MINIMUM OF 80 KSI, A MINIMUM 14% ELONGATION IN 8 INCHES AND PASSING A 180 DEGREE BEND TEST USING A 3-½" PIN BEND DIAMETER FOR BEND TESTS. THE LOOPS SHALL BE INSTALLED WITHIN ⅛" OF THE PLAN DIMENSION.

CONSTRUCT LIFTING SLOTS AS SPECIFIED ON THE PLANS TO FACILITATE THE DRAINAGE OF WATER AFTER INSTALLATION.

PLACE BARRIER ON A PAVED SURFACE. REMOVE ALL LOOSE DIRT AND SAND FROM THE ROADWAY SURFACE PRIOR TO PLACEMENT OF THE BARRIER.

INSTALL MECHANICAL OR EPOXY ANCHORS PER MANUFACTURER'S RECOMMENDATIONS. PROVIDE MANUFACTURER'S INFORMATION TO PROJECT ENGINEER.

(1) MARK ONE END OF EACH BARRIER PERMANENTLY BY FORMING INTO THE BARRIER THE FOLLOWING INFORMATION:
- a. TYPE: WICBTP
- b. MANUFACTURER
- c. DATE MANUFACTURED (MONTH AND YEAR)

(2) 1" CHAMFER TO PREVENT SPALLING.

(3) A ⅜" HOLE IN THE CONNECTION PIN, AT THE LOCATION SHOWN, IS ACCEPTABLE, BUT NOT REQUIRED..

(4) "V" NOTCH IS OPTIONAL.

(5) THE 4" DIAMETER, 11 GAUGE STEEL, ROUND MECHANICAL TUBING SLEEVE FOR LIFTING (OPTIONAL).

(6) NEVER USE LOOP BARS (6D1, 6D2 OR 6D3) TO LIFT, MOVE OR REPOSITION THE BARRIER.

(7) USE DELINEATORS CONFORMING TO SECTION 633 OF THE STANDARD SPECIFICATIONS. CONTRACTOR MAY USE ALTERNATE SHAPES AND HOUSING. INSTALL DELINEATORS ACCORDING TO MANUFACTURES INSTRUCTION. INSTALL YELLOW REFLECTORS WHEN BARRIER IS LOCATED TO THE LEFT OF TRAFFIC AND WHITE REFLECTORS WHEN BARRIER IS LOCATED TO THE RIGHT OF TRAFFIC. SPACE DELINEATORS A MAXIMUM OF 25 FEET APART. PROVIDE TOP MOUNTED DELINEATORS IN ADDITION TO THE SIDE MOUNTED DELINEATORS ON ALL BARRIER INSTALLATIONS LOCATED ON A CURVED ALIGNMENT LONGER THAN 200 FEET AND ON BARRIERS USED TO SEPARATE OPPOSING TRAFFIC.

(8) SEE SHEET D FOR ANCHORING CRITERIA.

(9) 1" CHAMFER OPTIONAL.

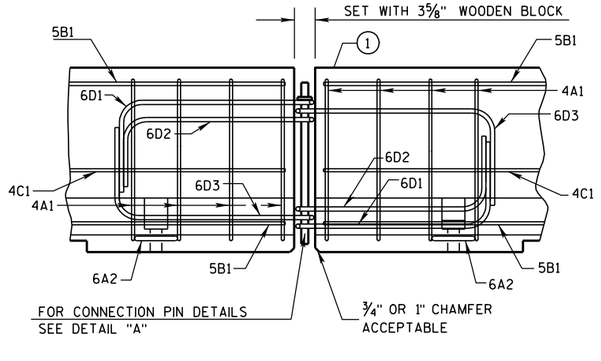

DETAILS OF BARRIER CONNECTION

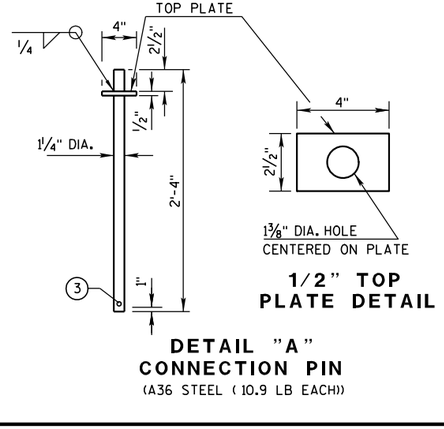

1/2" TOP PLATE DETAIL

DETAIL "A"
CONNECTION PIN
(A36 STEEL (10.9 LB EACH))

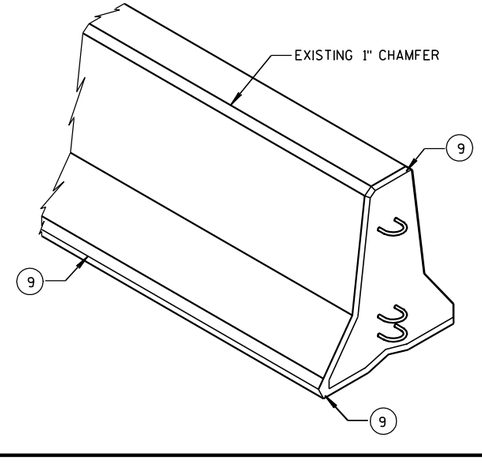

CONCRETE BARRIER TEMPORARY PRECAST, 12'-6"

STATE OF WISCONSIN
DEPARTMENT OF TRANSPO.....

6
S.D.D. 14 B 7-13a

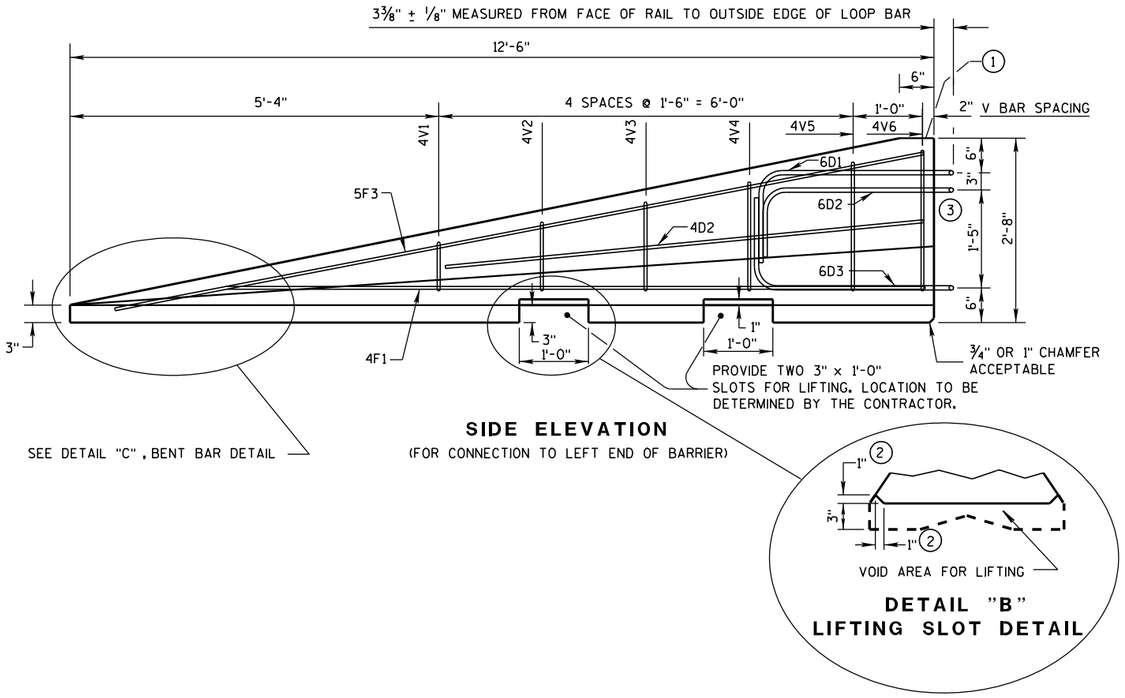

SIDE ELEVATION

(FOR CONNECTION TO LEFT END OF BARRIER)

DETAIL "B"
LIFTING SLOT DETAIL

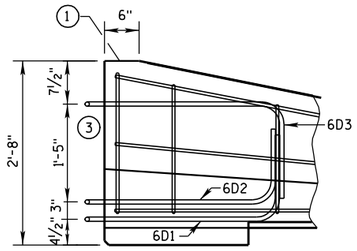

SIDE ELEVATION

LOOP BAR ASSEMBLY INVERTED
FOR OPPOSITE END.
(FOR CONNECTION TO RIGHT END OF BARRIER)

GENERAL NOTES

1. MARK ONE END OF EACH BARRIER PERMANENTLY BY FORMING INTO THE BARRIER THE FOLLOWING INFORMATION:
   a. TYPE WICBTP
   b. MANUFACTURER
   c. DATE MANUFACTURED (MONTH AND YEAR)
2. 1" CHAMFER TO PREVENT SPALLING.
3. NEVER USE LOOP BARS (6D1, 6D2 OR 6D3) TO LIFT, MOVE OR REPOSITION THE BARRIER.

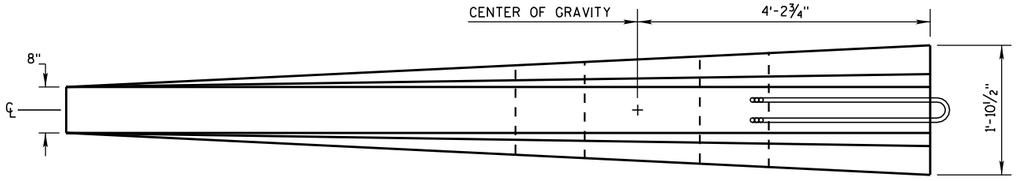

PLAN VIEW

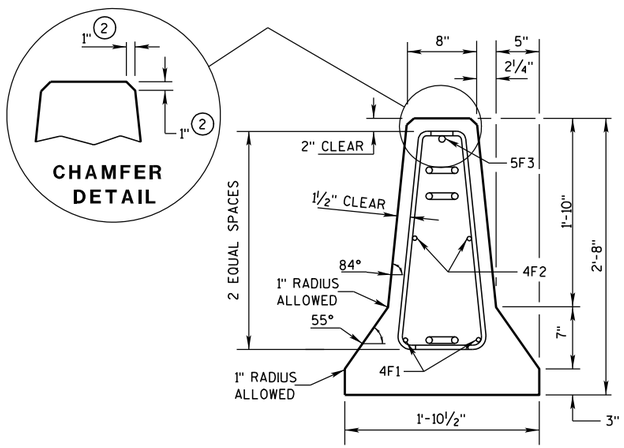

END SECTION

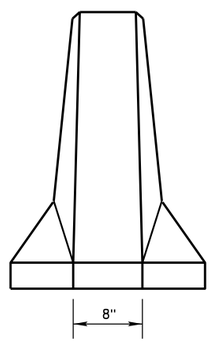

FRONT ELEVATION

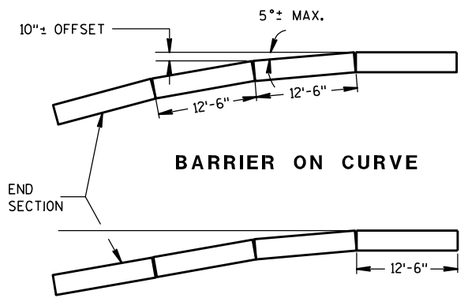

BARRIER ON CURVE

FLARE AT BARRIER END

POSTED SPEED, (MPH)	FLARE RATE
40 OR LESS	6:1
45 OR GREATER	8:1

DETAILS OF BARRIER TAPER SECTION

CONCRETE BARRIER
TEMPORARY PRECAST, 12'-6"

STATE OF WISCONSIN
DEPARTMENT OF TRANSPORTATION

6

S.D.D. 14 B 7-13b

6

S.D.D. 14 B 7-13b

BARRIER TAPER SECTION BILL OF MATERIALS

(PER 12'-6" BARRIER TAPER SECTION)

BAR	BAR SIZE	NO. OF BARS	LENGTH FT.
4V1	4	2	1'-11"
4V2	4	2	2'-2"
4V3	4	2	2'-6"
4V4	4	2	2'-9"
4V5	4	2	3'-2"
4V6	4	2	3'-4"
4F1	4	2	12'-0"
4F2	4	2	7'-6"
5F3	5	1	11'-9"
LOOP ASSEMBLY			
6D1	6	1	8'-5"
6D2	6	1	7'-7"
6D3	6	1	8'-6"

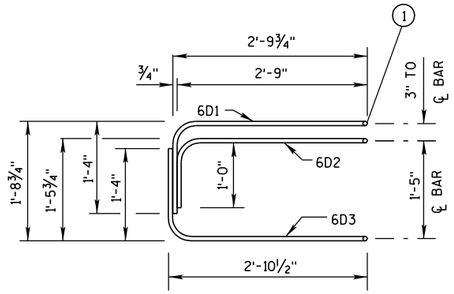

ELEVATION
LOOP BAR ASSEMBLY

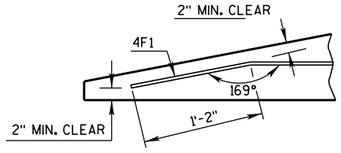

DETAIL "C"
BENT BAR DETAIL

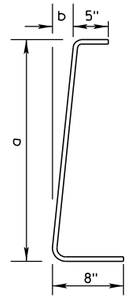

BAR	a	b
V1	10"	1"
V2	1'-1"	1¼"
V3	1'-5"	1⅝"
V4	1'-8"	1⅞"
V5	2'-0½"	2⅜"
V6	2'-3"	2¾"

4V BARS
2 AT EACH SIZE REQUIRED
FOR STIRRUP ASSEMBLY

TAPER BARRIER SECTION

GENERAL NOTES

(1) NEVER USE LOOP BARS (6D1, 6D2 OR 6D3) TO LIFT, MOVE OR REPOSITION THE BARRIER.

BARRIER SECTION BILL OF MATERIALS

(PER 12'-6" BARRIER SECTION)

BAR	BAR SIZE	NO. OF BARS	LENGTH FT.
4A1	4	12	6'-0"
6A2	6	6	2'-11"
5B1	5	3	12'-2"
4C1	4	2	12'-2"
LOOP ASSEMBLY			
6D1	6	2	8'-5"
6D2	6	2	7'-7"
6D3	6	2	8'-6"

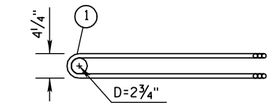

PLAN VIEW
LOOP BAR ASSEMBLY
(MARKED END SHOWN, INVERT FOR OTHER END)

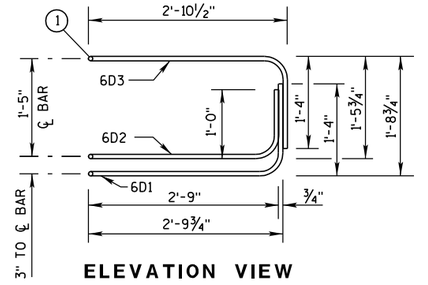

ELEVATION VIEW

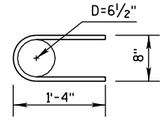

6A2

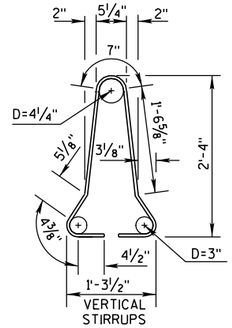

4A1

BARRIER SECTION

CONCRETE BARRIER
TEMPORARY PRECAST, 12'-6"

STATE OF WISCONSIN
DEPARTMENT OF TRANSPORTATION

6

S.D.D. 14 B 7-13c

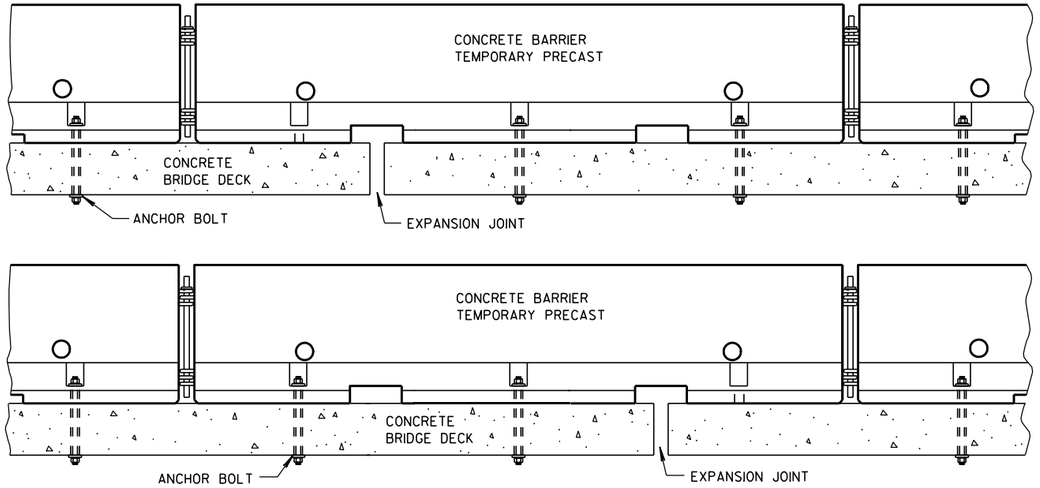

TREATMENT AT BRIDGE DECK EXPANSION JOINTS

(NO SINGLE CONCRETE BARRIER SECTION SHALL BE ANCHORED TO BOTH THE BRIDGE DECK AND THE APPROACH SLAB. ALL ANCHOR BOLT LOCATIONS SHALL BE ANCHORED TO THE DECK IN ACCORDANCE WITH THE DETAIL. NO MORE THAN ONE ANCHOR BOLT SHALL BE ELIMINATED FROM A BARRIER SECTION WHEN SPANNING AN EXPANSION JOINT.)

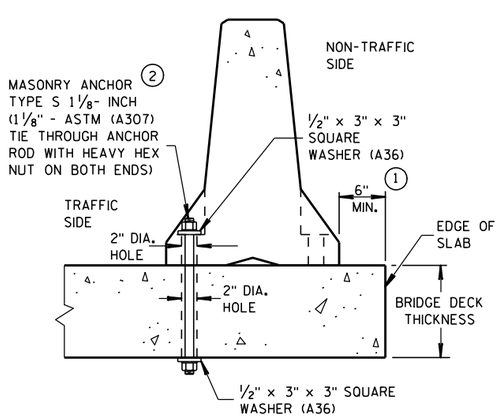

THROUGH BOLTED ANCHOR INSTALLATION ON BRIDGE DECK

(DO NOTUSE ON CONCRETE BRIDGE DECK WITH ASPHALT OVERLAY)

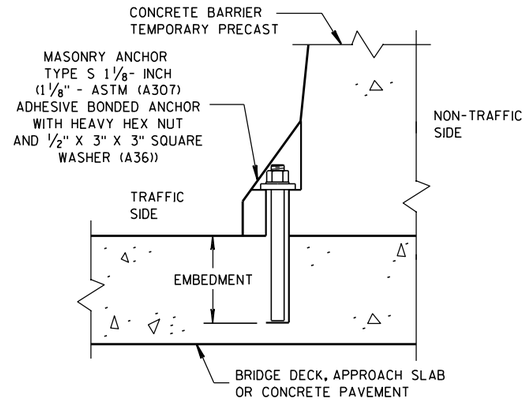

REMOVABLE ADHESIVE BONDED ANCHOR INSTALLATION ON CONCRETE BRIDGE DECK, CONCRETE APPROACH SLAB, OR CONCRETE PAVEMENT 2

(DO NOT USE ON CONCRETE WITH AN ASPHALTIC OVERLAY)

GENERAL NOTES

1. CONCRETE BARRIER TEMPORARY PRECAST, 12'-6" SHALL BE ANCHORED IF:
   THE DISTANCE TO A 2 FOOT OR GREATER DROPOFF THAT IS STEEPER THAN 3H : 1V, FOR EXAMPLE THE EDGE OF A BRIDGE DECK OR A DROPOFF AT THE EDGE OF PAVEMENT, IS LESS THAN 4 FEET FROM THE SIDE OF THE BARRIER CLOSEST TO THE DROPOFF AND THE POSTED SPEED IS 45 MPH OR GREATER, OR

   THE DISTANCE TO A 2 FOOT OR GREATER DROPOFF THAT IS STEEPER THAN 3H : 1V, FOR EXAMPLE THE EDGE OF A BRIDGE DECK OR A DROPOFF AT THE EDGE OF PAVEMENT. IS LESS THAN 2 FEET FROM THE SIDE OF THE BARRIER CLOSEST TO THE DROPOFF AND THE POSTED SPEED IS 40 MPH OR LESS.

2. ANCHORING IS INCIDENTAL TO CONCRETE BARRIER TEMPORARY PRECAST.

   WITH THE APPROVAL OF THE ENGINEER, REMOVABLE ADHESIVE BONDED (EPOXY) ANCHOR BOLT INSTALLATION MAY BE USED IN LIEU OF THROUGH BOLTED ANCHOR INSTALLATION. THE ADHESIVE BONDED ANCHOR BOLT MUST BE REMOVABLE. USE ASTM (A307) MASONRY ANCHORS TYPE S 1⅛-INCH, EMBEDDED TO A DEPTH SUFFICIENT TO DEVELOP THE ULTIMATE CAPACITY OF THE ANCHOR BOLT AND PROVIDE DOCUMENTATION TO CONFIRM THIS.

   UPON REMOVAL OR RELOCATION OF THE BARRIER UNITS, REMOVE ALLANCHOR BOLTS AND COMPLETELY FILL IN THE REMAINING HOLES IN CONCRETE BRIDGE DECKS, CONCRETE APPROACH SLABS AND CONCRETE PAVEMENTS THAT ARE TO REMAIN, WITH A NON-SHRINK COMMERICAL GROUT OR EPOXY MATERIAL IDENTIFIED ON THE CURRENT WISDOT APPROVED PRODUCTS LIST.

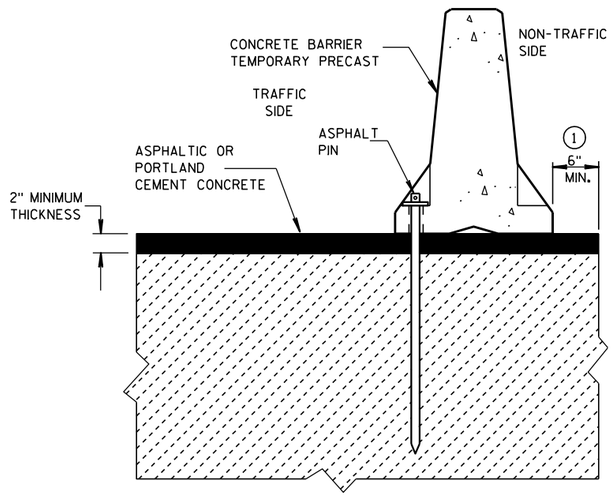

STAKE DOWN INSTALLATION FOR ASPHALTIC OR PORTLAND CEMENT CONCRETE SURFACE

(STAKING IS INCIDENTAL TO CONCRETE BARRIER TEMPORARY PRECAST)

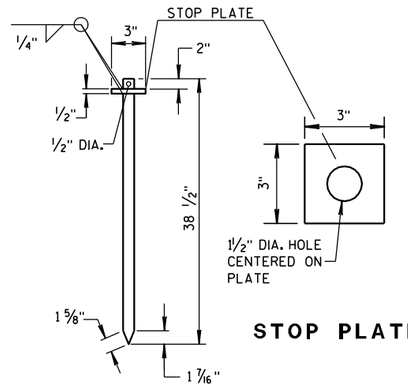

STOP PLATE

ASPHALT PIN

(ASTM A36 STEEL)

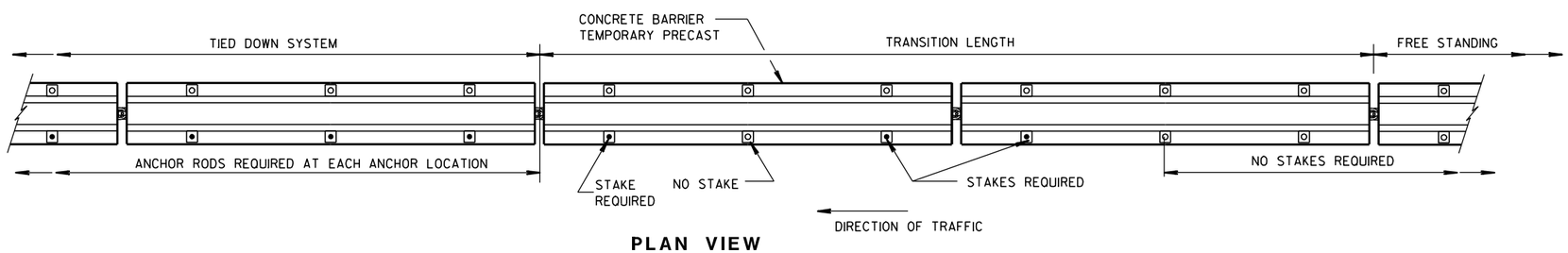

PLAN VIEW

FREE STANDING TRANSITION TO TIED-DOWN SYSTEM

(PLACE TRANSITION IN A TANGENT SECTION OF BARRIER PARALLEL TO THE ROADWAY. IF TRANSITION OCCURS ON STRUCTURAL SLAB, ANCHOR AS SHOWN.)

CONCRETE BARRIER TEMPORARY PRECAST, 12'-6"

STATE OF WISCONSIN
DEPARTMENT OF TRANSPO...

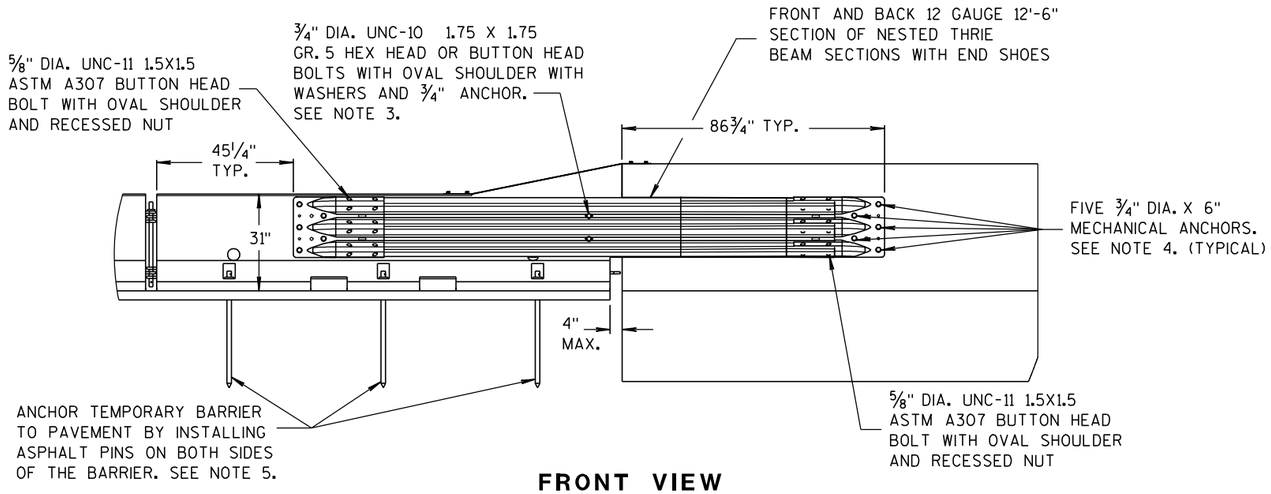

FRONT VIEW

NOTES

1. CAP END PLATE PLACED FLUSH WITH UPSTREAM END OF PERMANENT BARRIER OR PARAPET.
2. THRIE BEAM PIECES ARE OFFSET 15¼" TO PREVENT INTERFERENCE FROM THE ANCHORS ON OPPOSING SIDES.
3. MINIMUM MECHANICAL OR EPOXY ANCHOR STRENGTH REQUIREMENTS: ULTIMATE TENSILE LOAD 9.48 KIPS AND ULTIMATE SHEAR LOAD 10.48 KIPS.
4. MINIMUM MECHANICAL OR EPOXY ANCHOR STRENGTH REQUIREMENTS: ULTIMATE TENSILE LOAD 17.9 KIPS AND ULTIMATE SHEAR LOAD 21.96 KIPS.
5. MAY BE USED ON CONCRETE OR ASPHALT PAVEMENTS. ASPHALT OPTION SHOWN. FOR CONCRETE OPTION SEE OTHER DETAILS.
6. MINIMUM MECHANICAL OR EPOXY ANCHOR STRENGTH REQUIREMENTS: ULTIMATE TENSILE LOAD 12.14 KIPS AND ULTIMATE SHEAR LOAD 17.5 KIPS.

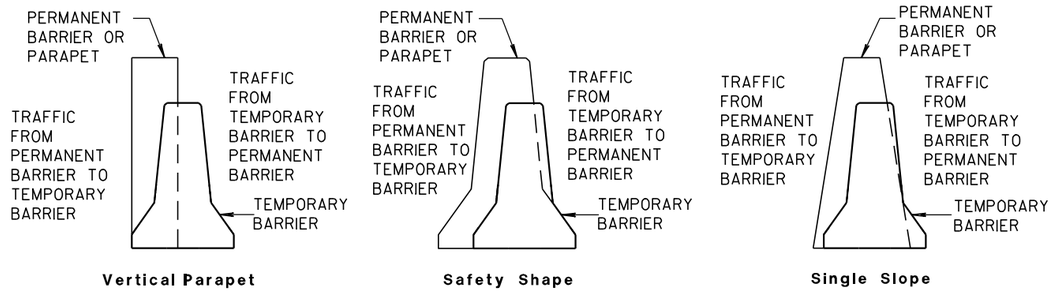

TEMPORARY BARRIER PLACEMENT FOR BI-DIRECTIONAL TRANSITION TO TIED-DOWN SYSTEM

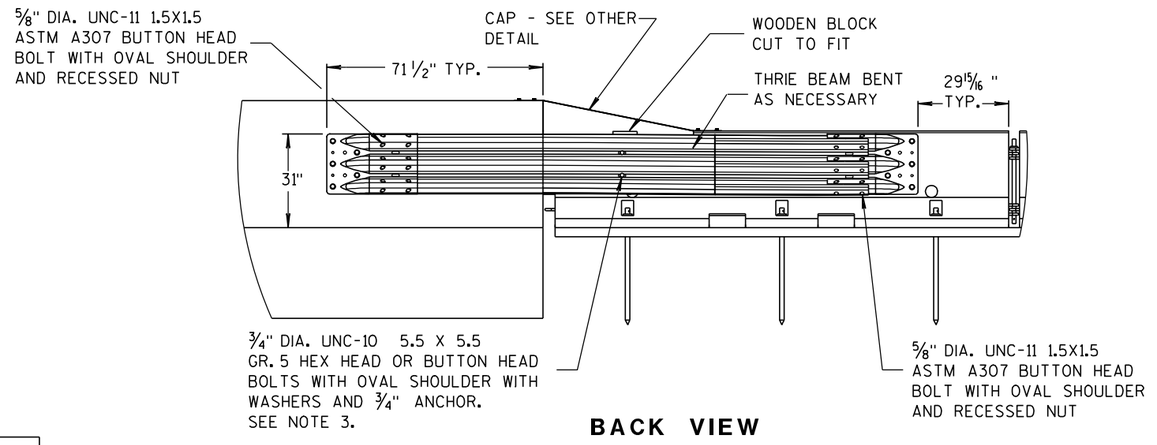

BACK VIEW

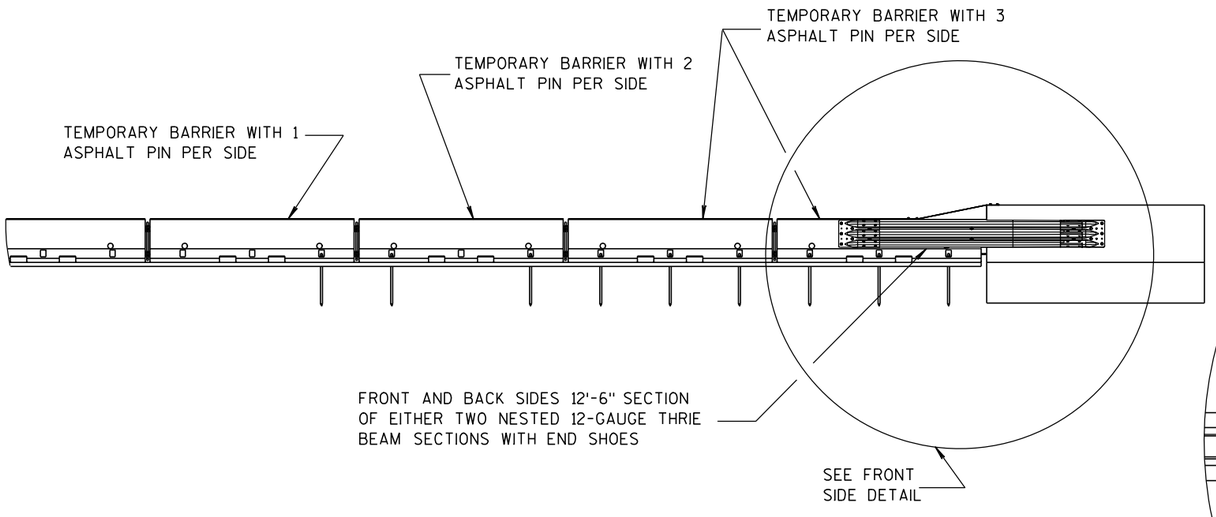

FRONT VIEW

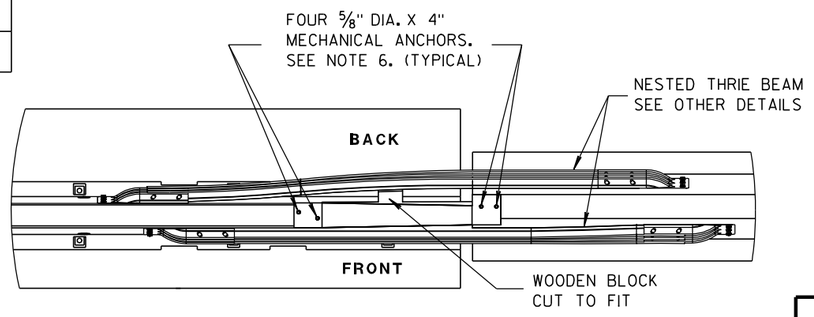

PLAN VIEW

BI-DIRECTIONAL TRANSITION TO TIED-DOWN SYSTEM

CONCRETE BARRIER TEMPORARY PRECAST, 12'-6"

STATE OF WISCONSIN
DEPARTMENT OF TRANSPORTATION

6
S.D.D. 14 B 7-13e

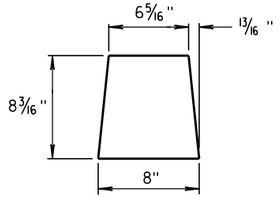

GUSSET 1

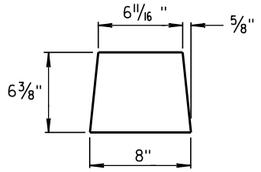

GUSSET 2

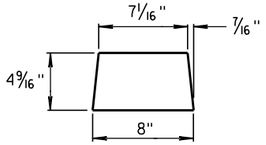

GUSSET 3

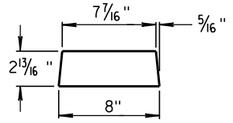

GUSSET 4

GUSSETS

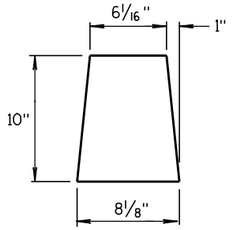

END PLATE

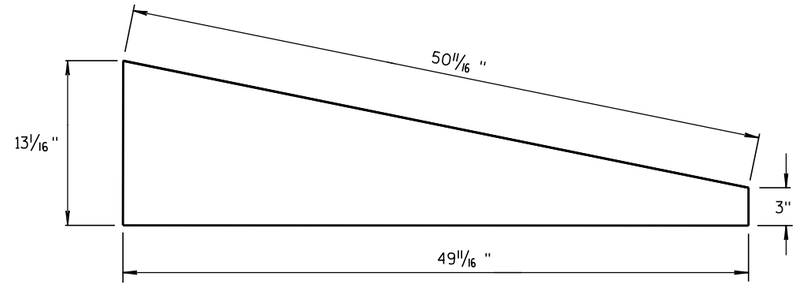

SIDE PLATE

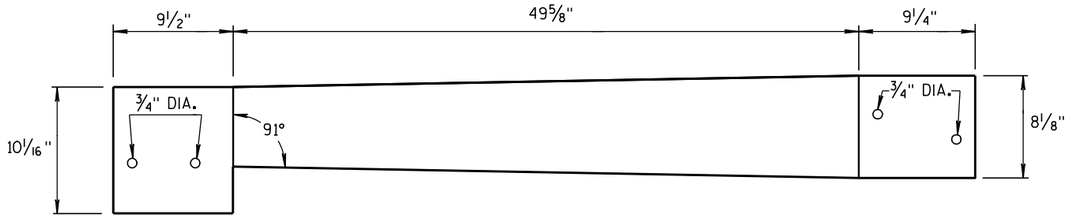

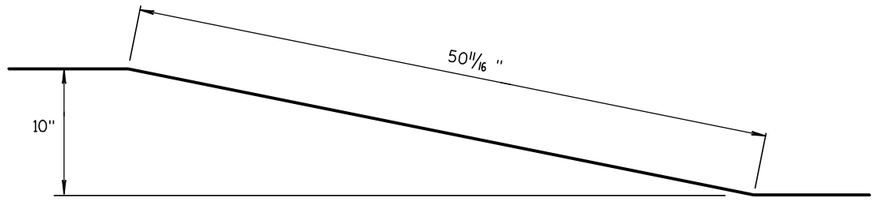

TOP PLATE

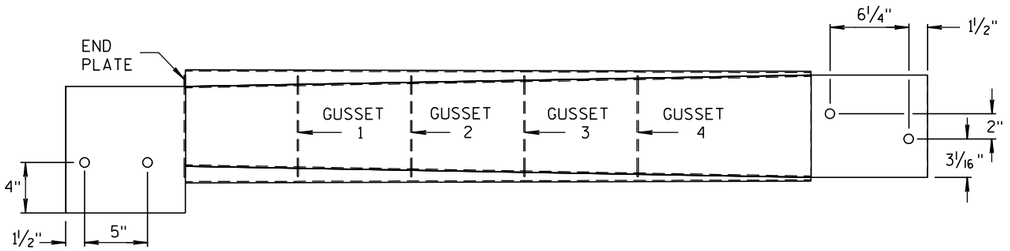

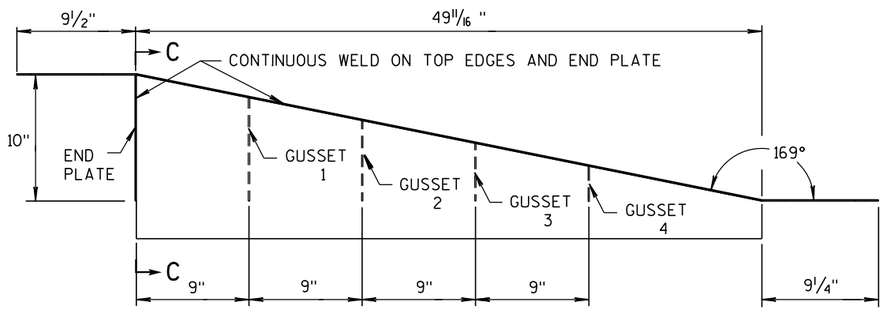

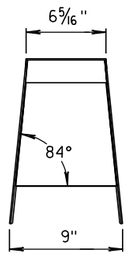

SECTION C-C

NOTES

1. FOUR GUSSETS AND END PLATE ARE STITCH WELDED ON THREE SIDES.
2. TWO TRIANGULAR SIDE PLATES ARE STITCH WELDED TO TOP PLATE, END PLATE, AND GUSSETS.

CAP DETAILS FOR TEMPORARY CONCRETE BARRIER TO 42" PERMANENT CONCRETE BARRIER

SIDE, TOP AND END PLATES FOR CAP FROM TEMPORARY CONCRETE BARRIER TO 42" PERMANENT CONCRETE BARRIER

SIDE PLATES, TOP PLATE, END PLATE AND GUSSETS ARE 12 GAUGE ASTM A36 GALVANIZED STEEL.

CONCRETE BARRIER
TEMPORARY PRECAST, 12'-6"

STATE OF WISCONSIN
DEPARTMENT OF TRANSPO.....T

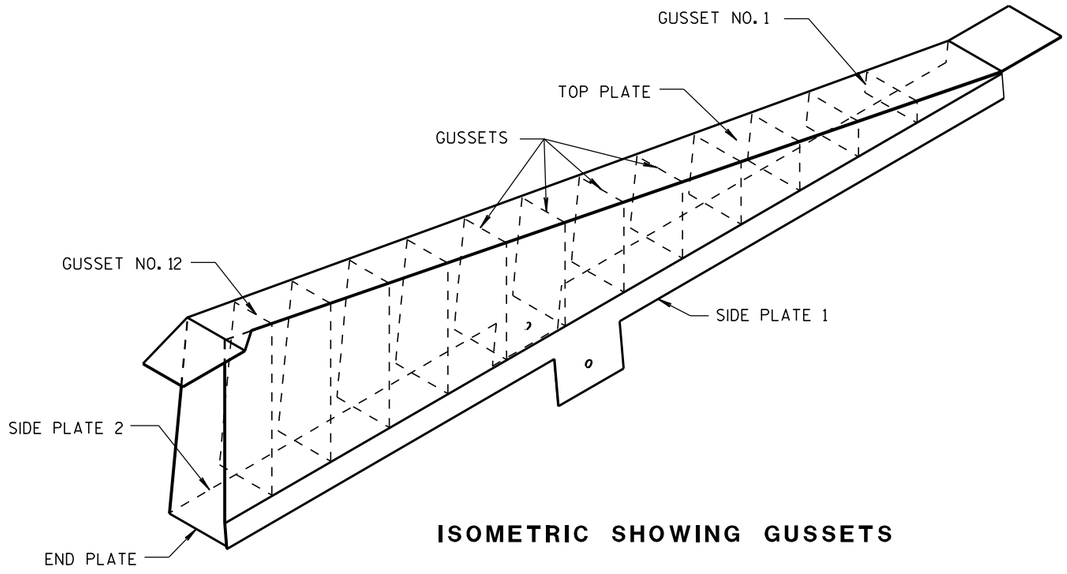

ISOMETRIC SHOWING GUSSETS

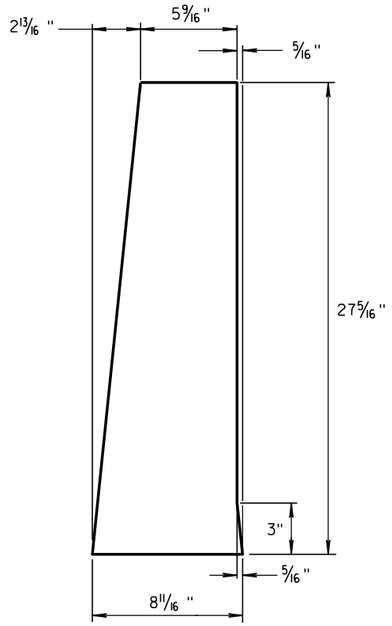

END PLATE

1/8" STEEL PLATE

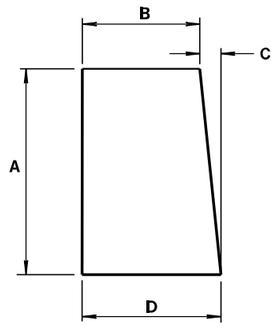

GUSSETS 1 - 12

ALL GUSSETS 1/8" STEEL PLATE

GUSSET DIMENSIONS

GUSSET NO.	A	B	C	D
1	2 7/8"	7 3/4"	1/4"	8
2	4 11/16 "	7 9/16 "	1/2"	8
3	6 1/2"	7 3/8"	11/16 "	8 1/16 "
4	8 5/16 "	7 3/16 "	7/8"	8 1/16 "
5	10 1/8"	7"	1 1/16 "	8 1/16 "
6	11 15/16 "	6 13/16 "	1 1/4"	8 1/16 "
7	13 3/4"	6 5/8"	1 7/16 "	8 1/16 "
8	15 9/16 "	6 7/16 "	1 9/16 "	8 1/16 "
9	17 3/8"	6 1/4"	1 13/16 "	8 1/16 "
10	19 3/16 "	6 1/16 "	1 15/16 "	8 1/16 "
11	21"	5 7/8"	2 3/16 "	8 1/16 "
12	22 13/16 "	5 11/16 "	2 5/16 "	8 1/16 "

SIDE PLATES, TOP PLATE, END PLATE AND GUSSETS ARE 12 GAUGE ASTM A36 STEEL AND GALVANIZED.

GUSSETS AND END PLATE ARE STITCH WELDED ON 3 SIDES. TWO TRIANGULAR SIDE PLATES ARE STITCH WELDED TO TOP PLATE, END PLATE AND GUSSETS.

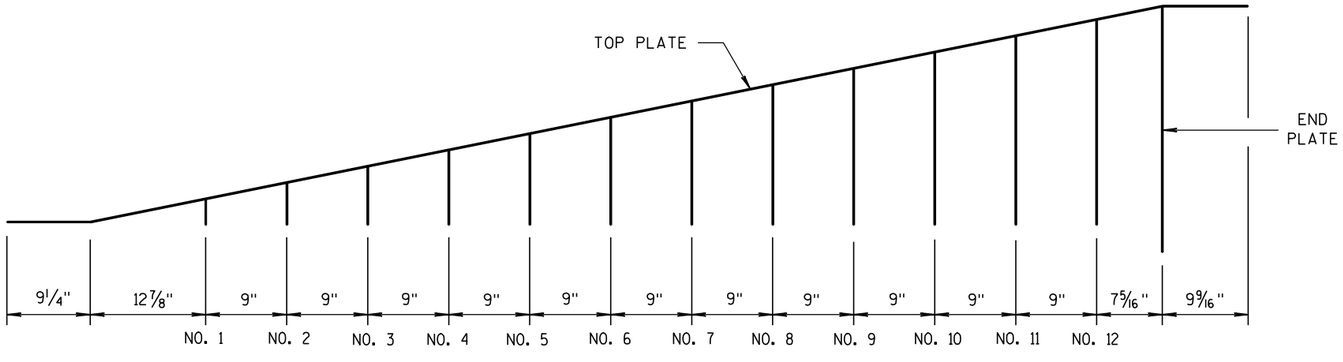

GUSSET LOCATION

CAP DETAILS FOR TEMPORARY CONCRETE BARRIER TO 56" PERMANENT CONCRETE BARRIER

CONCRETE BARRIER TEMPORARY PRECAST, 12'-6"

STATE OF WISCONSIN
DEPARTMENT OF TRANSPO...

6

S.D.D. 14 B 7-13g

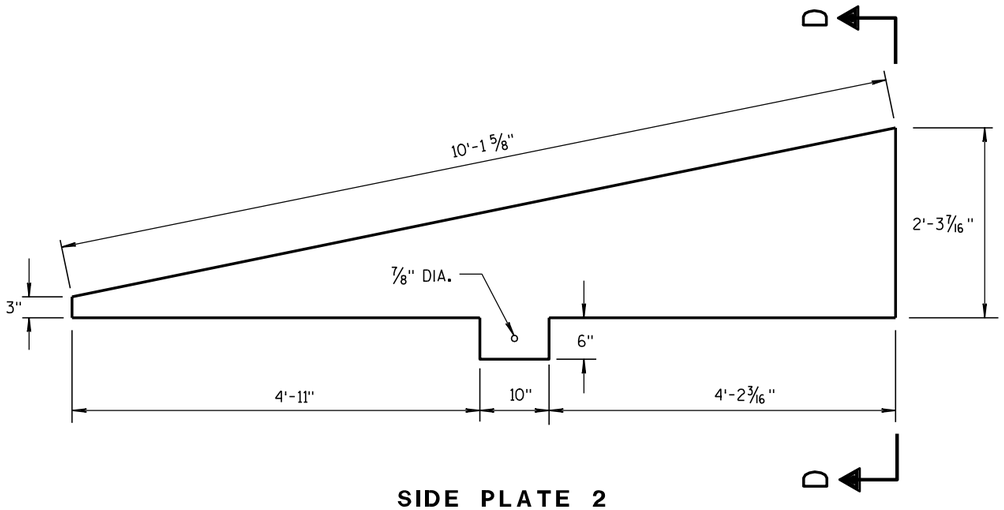

SIDE PLATE 2

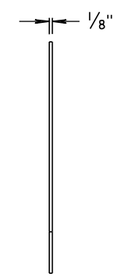

END VIEW

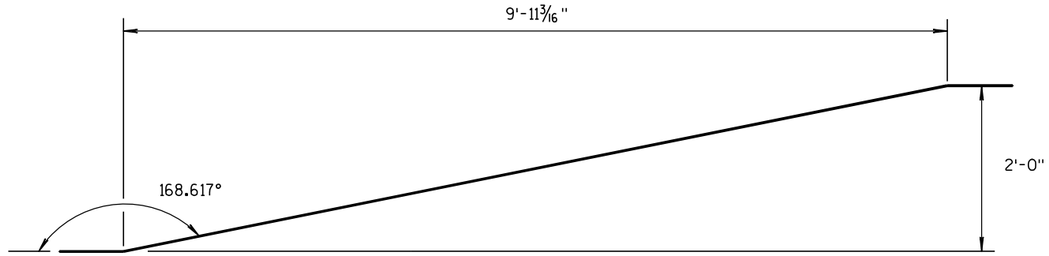

SIDE VIEW

TOP PLATE

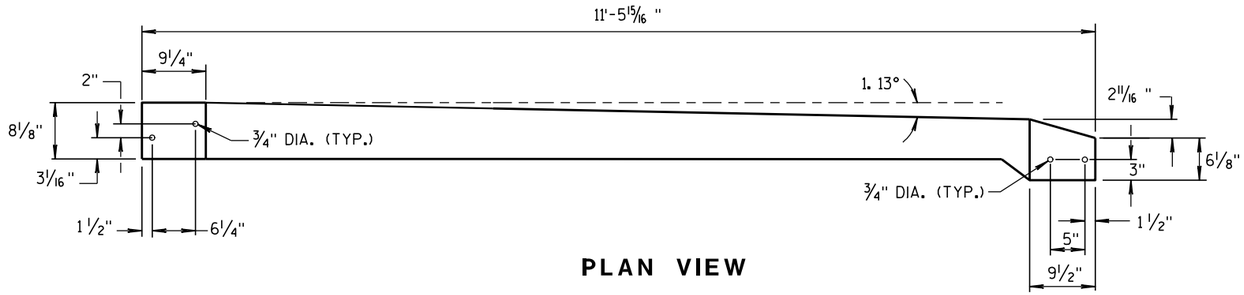

PLAN VIEW

TOP PLATE

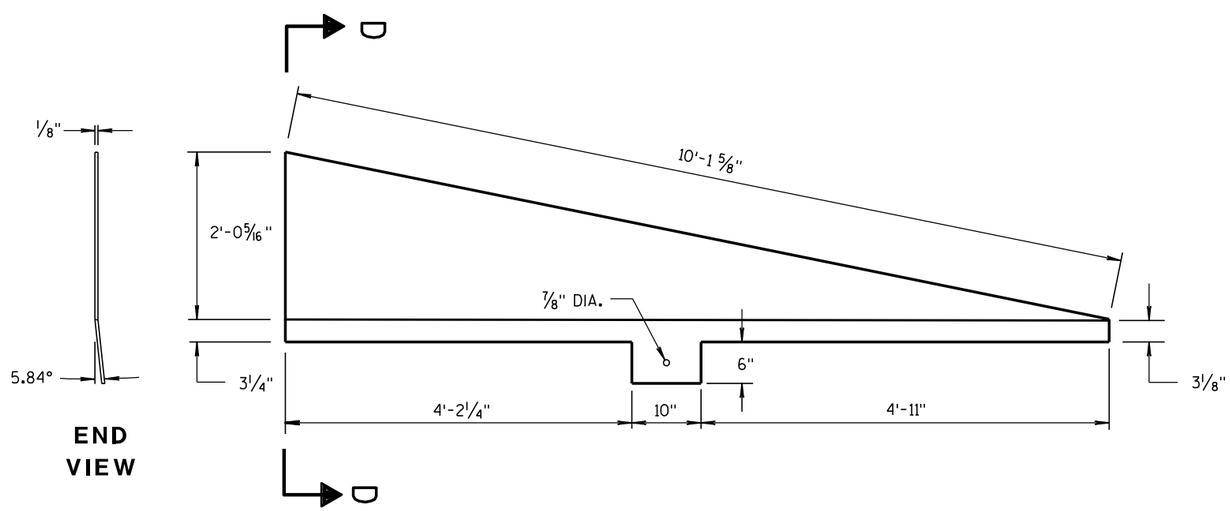

END VIEW

SIDE PLATE 1

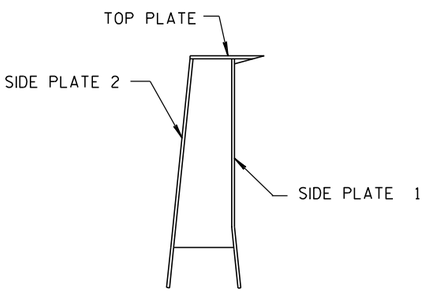

SECTION D-D

CAP DETAILS FOR TEMPORARY CONCRETE BARRIER TO 56" PERMANENT CONCRETE BARRIER

CONCRETE BARRIER
TEMPORARY PRECAST, 12'-6"

STATE OF WISCONSIN
DEPARTMENT OF TRANSPORTATION

APPROVED
8/31/2012 /S/ Jerry H. Zeng
DATE ROADWAY STANDARD ENGINEER ENT
FHWA

6

6

S.D.D. 14 B 7-13h

S.D.D. 14 B 7-13h

GENERAL NOTES

DETAILS OF CONSTRUCTION, MATERIALS AND WORKMANSHIP NOT SHOWN ON THIS DRAWING SHALL CONFORM TO THE PERTINENT REQUIREMENTS OF THE STANDARD SPECIFICATIONS, AND THE APPLICABLE SPECIAL PROVISIONS.

(1) W6 X 9 OR W6 X 8.5 STEEL POSTS AND NOTCHED PLASTIC BLOCKOUTS ARE ACCEPTABLE ALTERNATIVES FOR 6" X 8" WOOD POSTS WITH WOOD OR PLASTIC BLOCKOUTS. USE APPROVED NOTCHED PLASTIC BLOCKOUTS WITH STEEL POSTS. APPROVED PLASTIC BLOCKOUT DESIGNS MAY VARY FROM THIS TYPICAL DETAIL WHEN USED IN CONJUNCTION WITH STEEL POSTS.

DO NOT MIX STEEL POSTS AND WOOD POSTS IN A SINGLE INSTALLATION.

(2) USE STRUCTURAL STEEL POSTS CONFORMING TO ASTM A 36. GALVANIZED POSTS ACCORDING TO AASHTO M 111. EITHER SET THE POSTS IN DRILLED HOLES OR DRIVE TO GRADE. REMOVE MUSHROOMING CAUSED BY DRIVING AND REPAIR DAMAGED SPELTER COATING ON GALVANIZED POSTS.

(3) INSTALL STEEL POSTS WITH HOLES ON APPROACHING TRAFFIC SIDE.

(4) USE EITHER WOOD OR APPROVED PLASTIC BLOCKOUTS ON WOOD POSTS.

(5) IF THE DISTANCE FROM BACK OF POST TO SHOULDER HINGE POINT IS LESS THAN 2 FEET INSTALL LONGER POST AT HALF POST SPACING, W BEAM (LHW).

(6) IF ROCK IS ENCOUNTERED DURING EXCAVATION, THE ENGINEER MAY APPROVE USING A 12 INCH DIAMETER POST HOLE EXTENDING 20 INCHES DEEP INTO THE ROCK. PLACE GRANULAR MATERIAL IN THE BOTTOM OF THE HOLE APPROXIMATELY 2½ INCHES DEEP. CUT THE POSTS TO LENGTH AND PLACE IN YHE HOLE. BACKFILL WITH MATERIAL EXCAVATED FROM THE HOLE AND COMPACT ADEQUATEY.

INSTALL BEAM GUARD SECTIONS AND ALL NECESSARY HARDWARE ACCORDING TO THE APPLICABLE PLAN AND CURRENT STANDARD AND SUPPLEMENTAL SPECIFICATIONS.

ALL DIMENSIONS ARE SUBJECT TO MANUFACTURER'S TOLERANCES EXCEPT WHERE ALLOWABLE TOLERANCES ARE SHOWN.

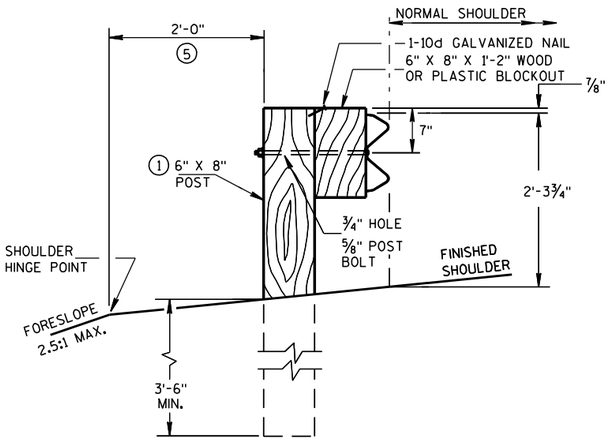

END VIEW
LOCATED ALONG A ROADWAY SHOULDER
STANDARD INSTALLATION

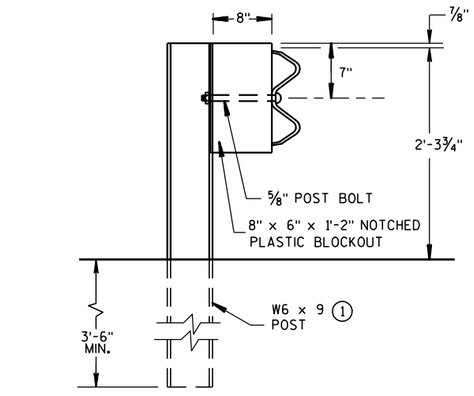

END VIEW
STEEL POST & NOTCHED
PLASTIC BLOCKOUT ALTERNATIVE
STANDARD INSTALLATION

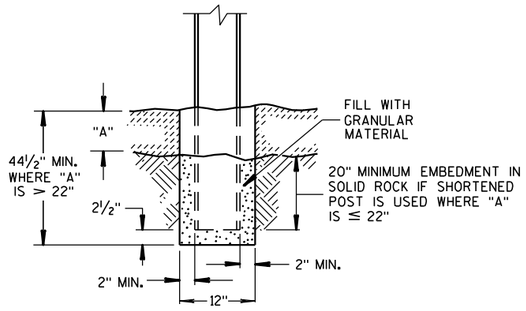

END VIEW
SETTING STEEL OR WOOD POST IN ROCK (6)

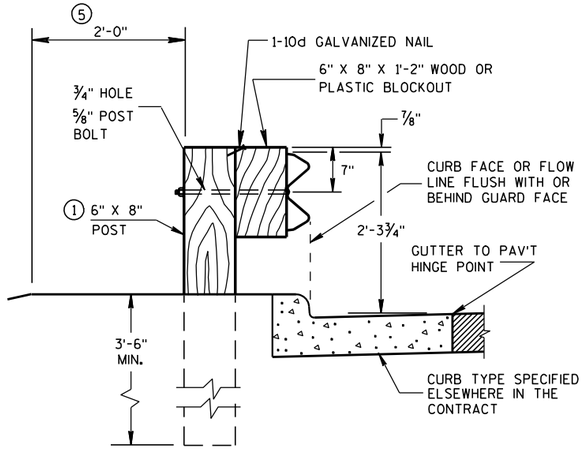

END VIEW
LOCATED ALONG A CURBED ROADWAY

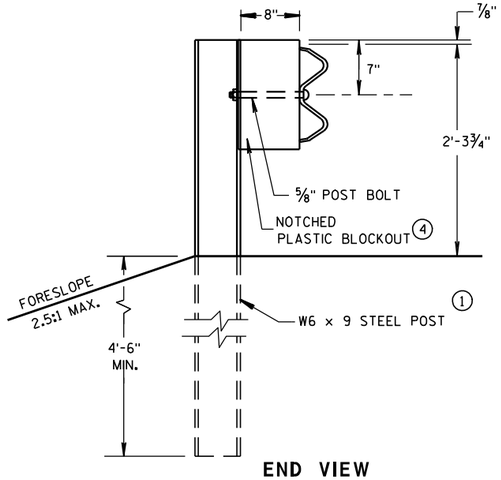

END VIEW
LONGER POST AT HALF
POST SPACING W BEAM
(LHW)

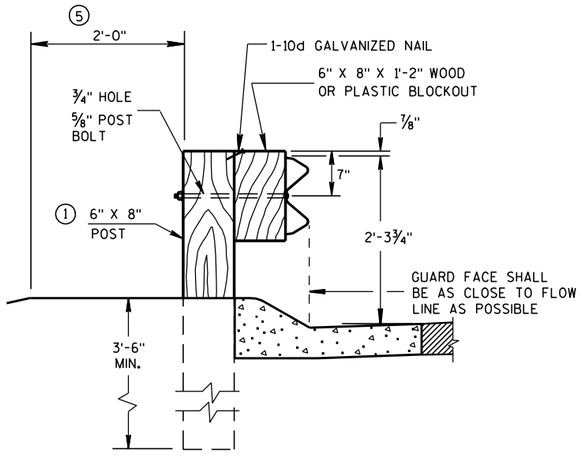

END VIEW
LOCATED ALONG A
MOUNTABLE CURBED ROADWAY

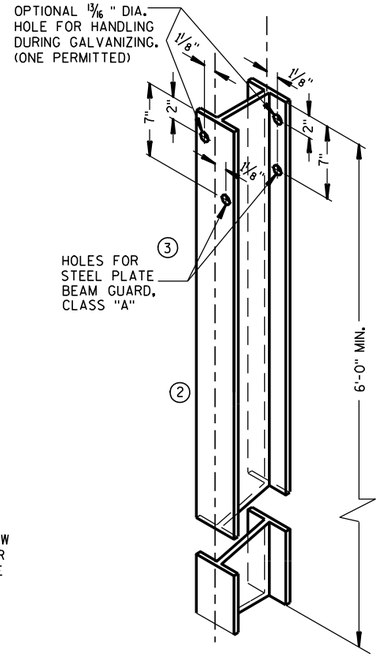

STEEL POST &
HOLE PUNCHING DETAIL
(W6 X 9) (1)

ALL HOLES 13/16" DIAMETER EXCEPT AS NOTED

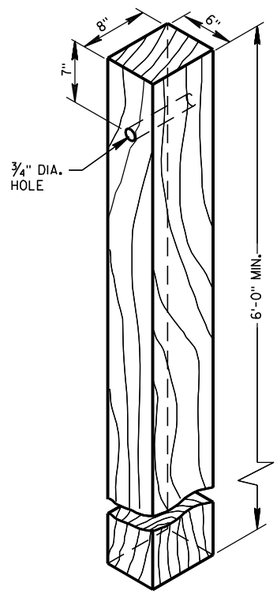

WOOD POST
(6"X8") NOMINAL

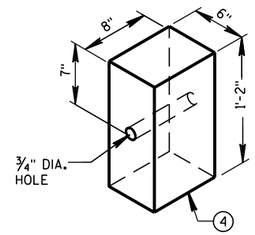

WOOD OR PLASTIC
BLOCKOUT FOR
WOOD POSTS

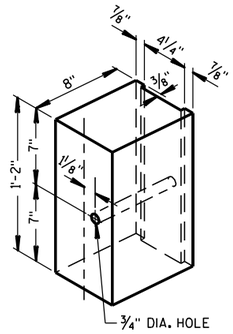

TYPICAL NOTCHED (1)
PLASTIC BLOCKOUT
FOR STEEL POSTS

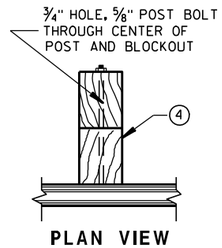

PLAN VIEW
WOOD POST,
BLOCKOUT & BEAM

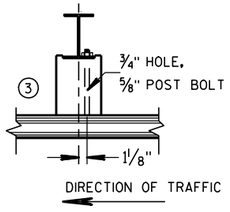

PLAN VIEW
STEEL POST, NOTCHED
PLASTIC BLOCKOUT & BEAM

STEEL PLATE BEAM GUARD,
CLASS "A"
INSTALLATION & ELEMENTS

STATE OF WISCONSIN
DEPARTMENT OF TRANSPORTATION

TYPICAL INSTALLATION OF STEEL PLATE BEAM GUARD

6
S.D.D. 14 B 15-7a

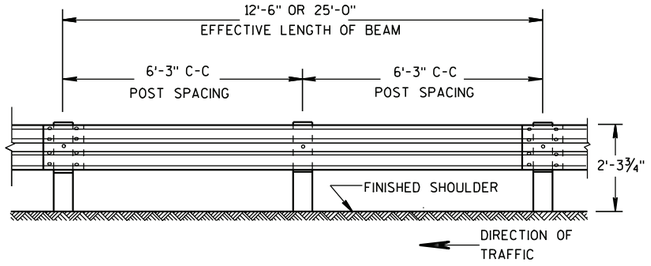

FRONT VIEW

POST SPACING STANDARD INSTALLATION

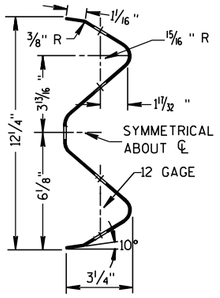

SECTION THRU W BEAM

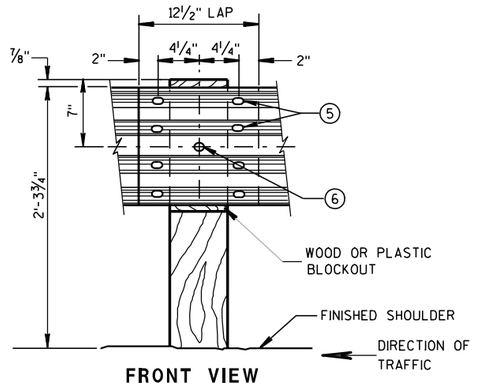

FRONT VIEW

BEAM SPLICE AT WOOD POST AND POST MOUNTING DETAIL

GENERAL NOTES

1. PROVIDE TYPE "H" SILVER REFLECTIVE SHEETING ON ALL REFLECTORS EXCEPT THOSE LOCATED ALONG THE LEFT EDGE OF ONE-WAY ROADWAYS, WHICH SHALL BE PROVIDED WITH TYPE "H" YELLOW REFLECTIVE SHEETING.
2. DO NOT INSTALL REFLECTORS ON THE FIRST 50 FEET OF THE APPROACH END OF THE ENERGY ABSORBING TERMINAL.
3. REVERSE EVERY OTHER REFLECTOR FOR 2-WAY VISIBILITY. THE CONTRACTOR MAY FURNISH TWO-SIDED REFLECTORS IN LIEU OF ONE-SIDED REFLECTORS.
4. PROVIDE AN ANGLE OF BEND OF 90° ± 1° FOR TWO-SIDED REFLECTORS.
5. 8 - 5/8" ϕ X 2 " BUTTON HEAD BOLTS WITH OVAL SHOULDERS & RECESS NUTS.
6. 5/8" ϕ X 1'-6" BUTTON HEAD BOLT AND AND RECESS NUT WITH ROUND WASHER UNDER NUT.

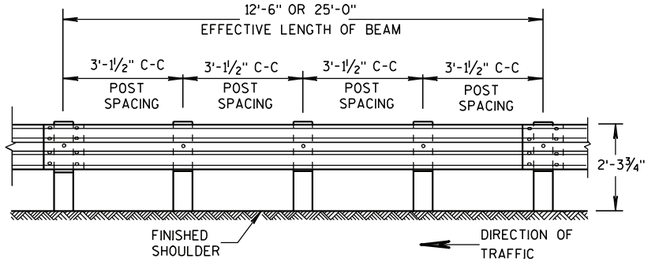

FRONT VIEW

POST SPACING FOR LONGER POST AT HALF POST SPACING W BEAM (LHW)

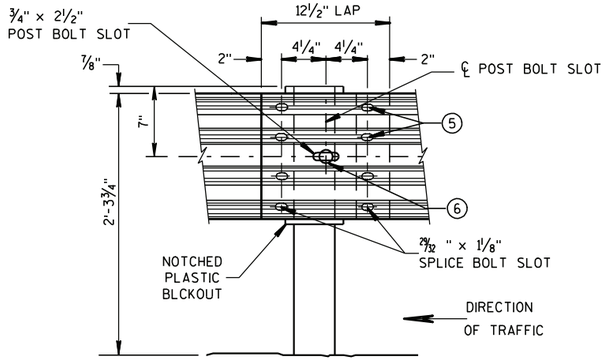

FRONT VIEW

BEAM SPLICE AT STEEL POST

TYPICAL SPLICING DETAILS OF STEEL PLATE BEAM GUARD

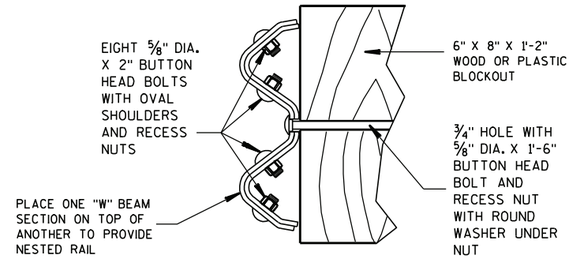

NESTED W BEAM (NW)

USE ALL OTHER STANDARD BEAM GUARD DETAILS FOR CONSTRUCTING NESTED W BEAM (NW)

REFLECTOR SPACING (2)

	BEAM GUARD LENGTH	REFLECTOR SPACING	NO. SURFACES REFLECTORIZED	MIN. NO. REFLECTORS
ONE WAY TRAFFIC	< 200'	50' C-C	1	3
	> 200'	100' C-C	1	
TWO WAY TRAFFIC	< 200'	25' C-C	1 (3)	6
	> 200'	50' C-C	1	
TWO WAY TRAFFIC	< 200'	50' C-C	2	3
	> 200'	100' C-C	2 (4)	

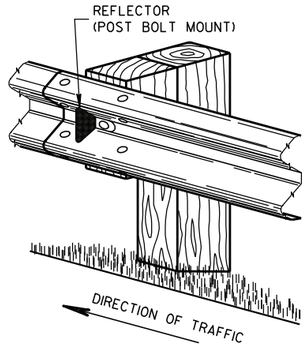

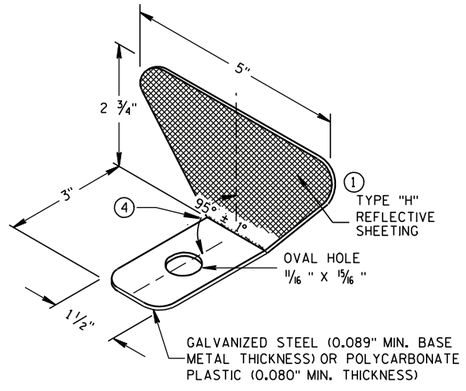

ONE SIDED REFLECTOR DETAIL AND TYPICAL INSTALLATION (1)

STEEL PLATE BEAM GUARD, CLASS "A", INSTALLATION & ELEMENTS

STATE OF WISCONSIN
DEPARTMENT OF TRANSPORTATION

6
S.D.D. 14 B 15-7b

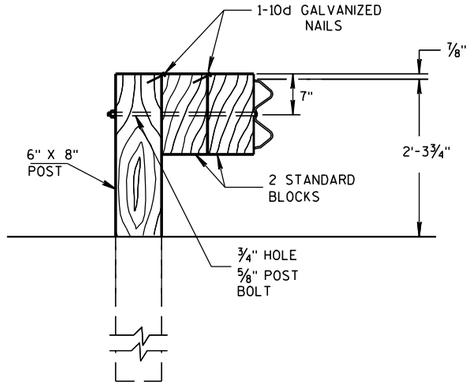

DETAIL FOR DOUBLE BLOCKS

THE NUMBER OF DOUBLE BLOCK POSTS WITHIN A BARRIER RUN IS UNLIMITED

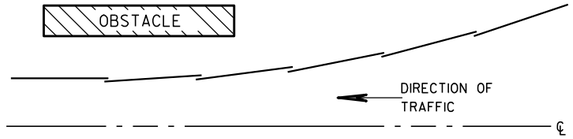

PLAN VIEW
BEAM LAPPING DETAIL

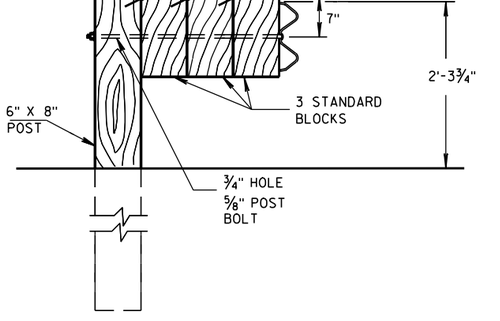

DETAIL FOR TRIPLE BLOCKS

TRIPLE BLOCK DETAIL IS LIMITED TO ONE LOCATION WITHIN A BEAM GUARD RUN.

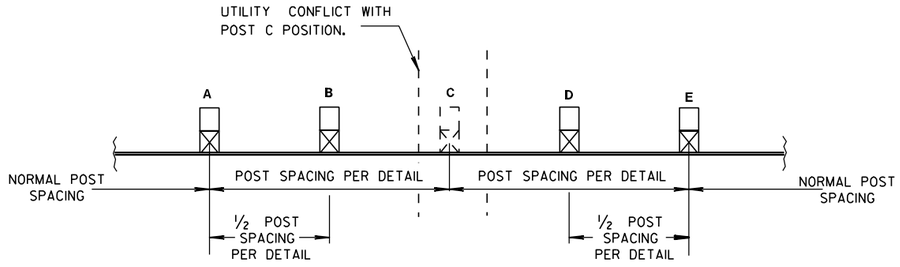

POST DRIVING FOR CONTINUOUS UNDERGROUND OBSTRUCTION

NOTES: USE DOUBLE OR TRIPLE BLOCKS WHEN UNDERGROUND OBSTACLES PREVENT THE POST FROM BEING INSTALLED.

DO NOT USE EXTRA BLOCKOUTS IF IT CAUSES THE POST TO BE DRIVEN BEYOND SHOULDER HINGE POINT OR CAUSES A FIXED OBJECT TO BE WITHIN THE DEFLECTION DISTANCE OF THE BARRIER.

STEEL PLATE BEAM GUARD, CLASS "A", INSTALLATION & ELEMENTS

STATE OF WISCONSIN
DEPARTMENT OF TRANSPORTATION

APPROVED

5/23/11 — DATE

/S/ Jerry H. Zogg — ROADWAY STANDARDS ENGINEER

FHWA

ENT

6

S.D.D. 14 B 15-7c

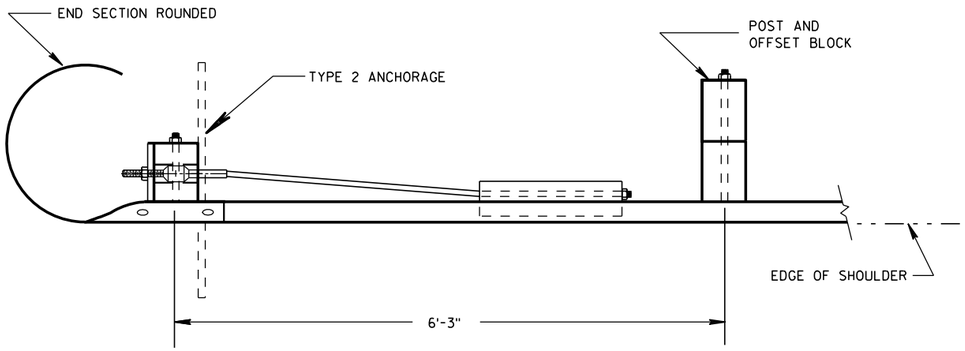

PLAN VIEW

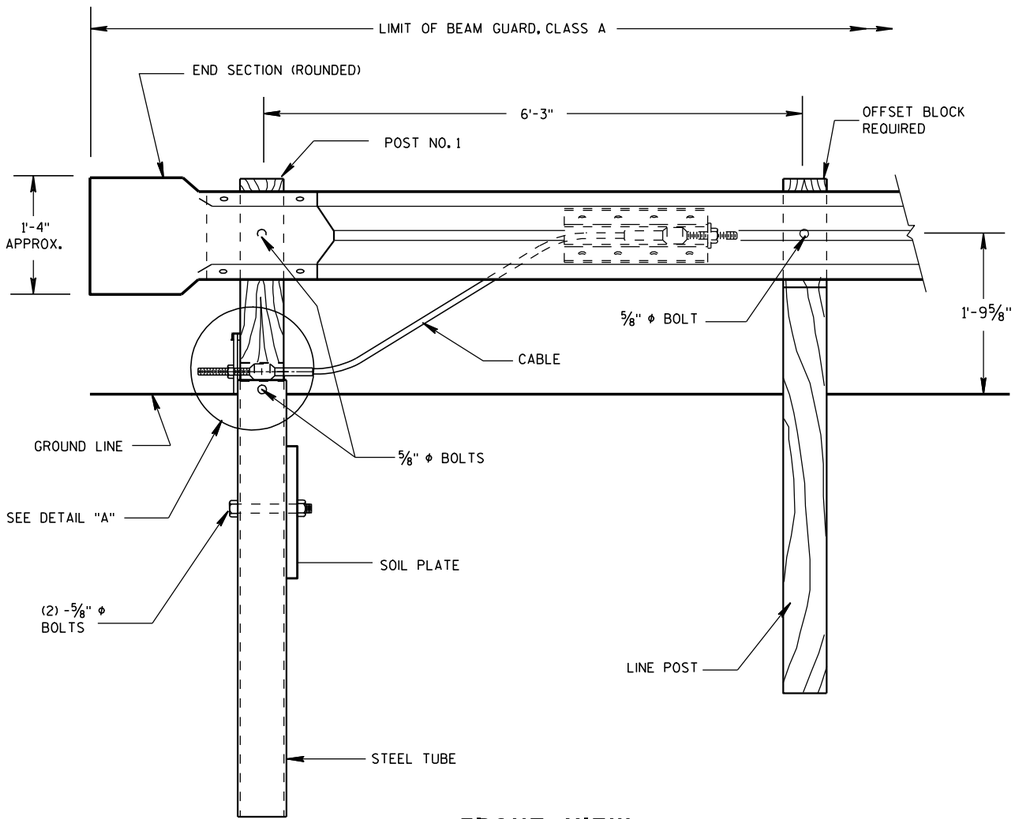

FRONT VIEW

END TREATMENT WITH TYPE 2 ANCHORAGE

(USE ON ONE-WAY ROADWAYS ONLY - DEPARTING END)

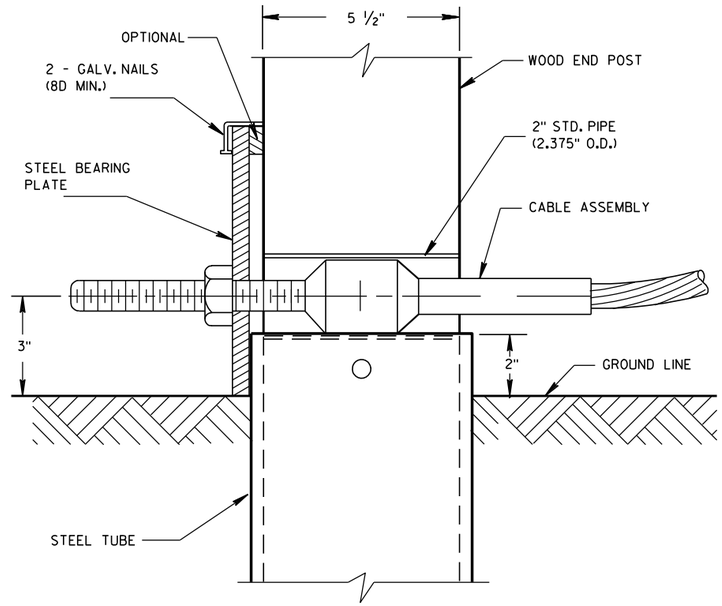

DETAIL "A"

POST NO. 1

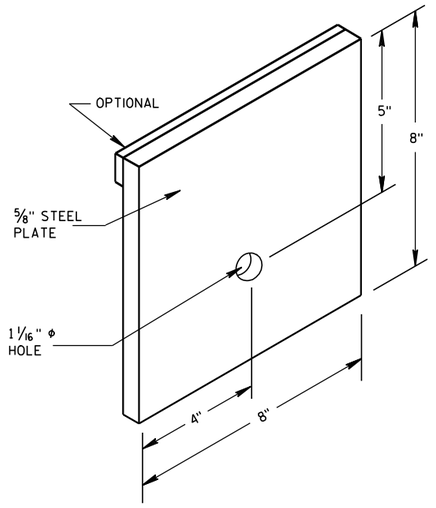

STEEL BEARING PLATE

ANCHORAGE FOR STEEL
PLATE BEAM GUARD
TYPE 2

STATE OF WISCONSIN
DEPARTMENT OF TRANSPORTATION

6

S.D.D. 14 B 16-4a

6

S.D.D. 14 B 16-4a

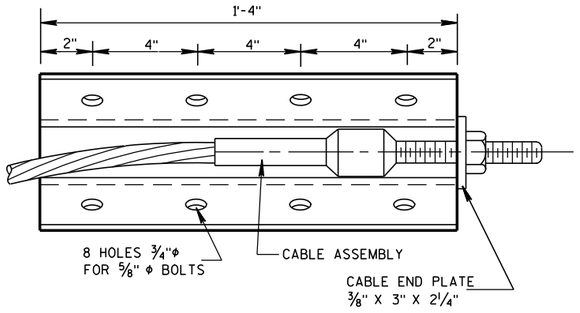

FRONT VIEW

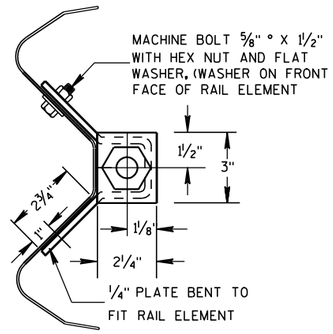

END VIEW

ANCHOR PLATE DETAIL

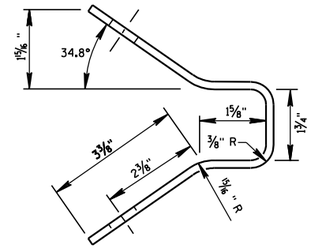

END VIEW OF BRACKET

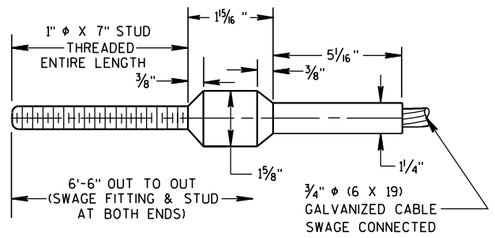

CABLE ASSEMBLY

CABLE, SWAGE FITTING, STUD AND NUT SHALL DEVELOP
A MINIMUM BREAKING STRENGTH OF 40,000 LB
(TIGHTEN UNTIL TAUT)

GENERAL NOTES

DETAILS OF CONSTRUCTION, MATERIALS AND WORKMANSHIP NOT SHOWN ON THIS DRAWING SHALL CONFORM TO THE PERTINENT REQUIREMENTS OF THW STANDARD SPECIFICATIONS AND THE APPLICABLE SPECIAL PROVISIONS.

STRUCTURAL TUBING SHALL CONFORM TO THE REQUIREMENTS OF ASTM A-500 GRADE B OR ASTM A-501.

POST NO. 1 SHALL BE WOOD BREAKAWAY POST INSERTED AND BOLTED INTO STEEL TUBE.

TYPE 2 ANCHORAGE SHALL CONSIST OF A STEEL TUBE, SOIL PLATE WOOD BREAKAWAY POST, BEARING PLATE, ANCHOR PLATE, CABLE ASSEMBLY AND ALL ASSOCIATED HARDWARE, ALL STEEL PARTS SHALL BE GALVANIZED.

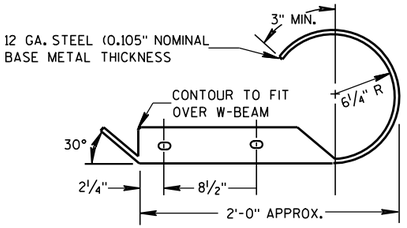

PLAN VIEW

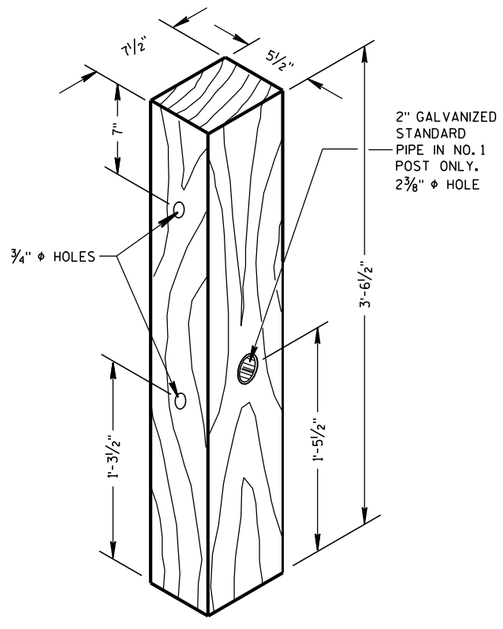

WOOD BREAKAWAY POST

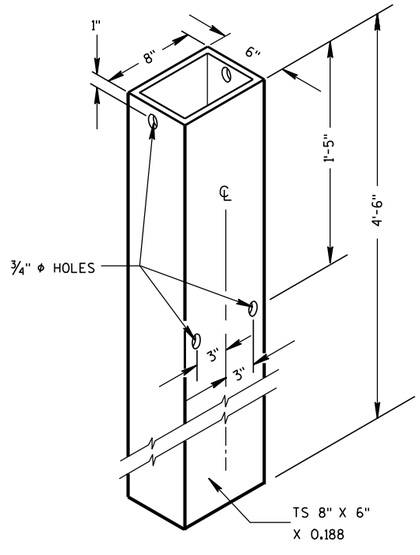

STEEL TUBE

STEEL TUBE SHALL CONFORM TO
REQUIREMENTS OF ASTM A500

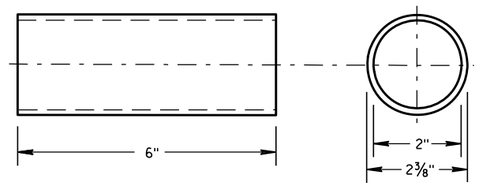

BREAKAWAY TERMINAL POST SLEEVE

GALVANIZED STANDARD STRENGTH STEEL PIPE, ASTM 53 GRADE "B"

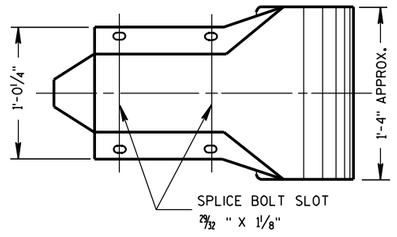

FRONT VIEW
W BEAM END SECTION ROUNDED

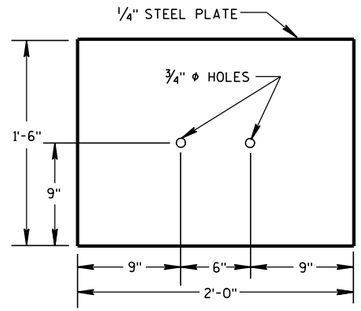

SOIL PLATE

ANCHORAGE FOR STEEL
PLATE BEAM GUARD
TYPE 2

STATE OF WISCONSIN
DEPARTMENT OF TRANSPORTATION

APPROVED
8/21/2007
DATE
/S/ Jerry H. [illegible]
ROADWAY STANDARDS ENGINEER

ENT

FHWA

6

S.D.D. 14 B 16-4b

6

S.D.D. 14 B 16-4b

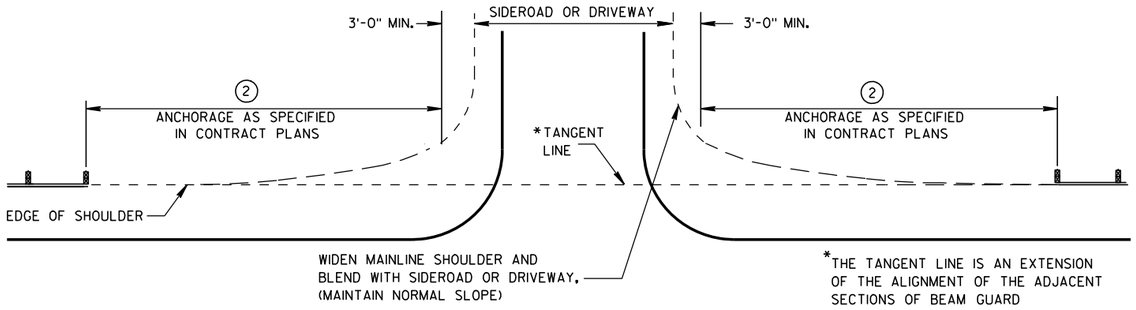

BEAM GUARD AT SIDEROADS OR DRIVEWAYS

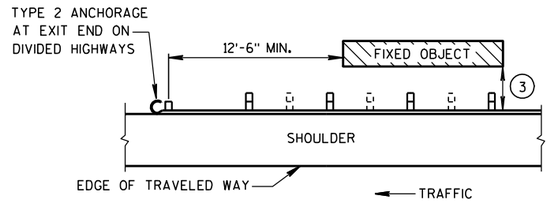

BEAM GUARD AT OBSTACLES EXIT END - ONE WAY TRAFFIC

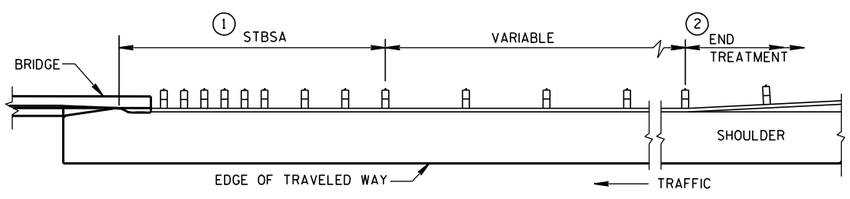

BEAM GUARD AT FULL WIDTH BRIDGES

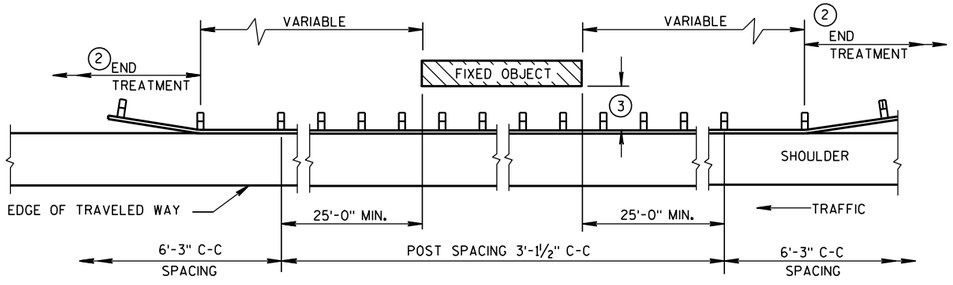

BEAM GUARD AT OBSTACLES - TWO WAY TRAFFIC

(RAIL TO OBSTACLE CLEARANCE 3'-6" TO 4'-6")

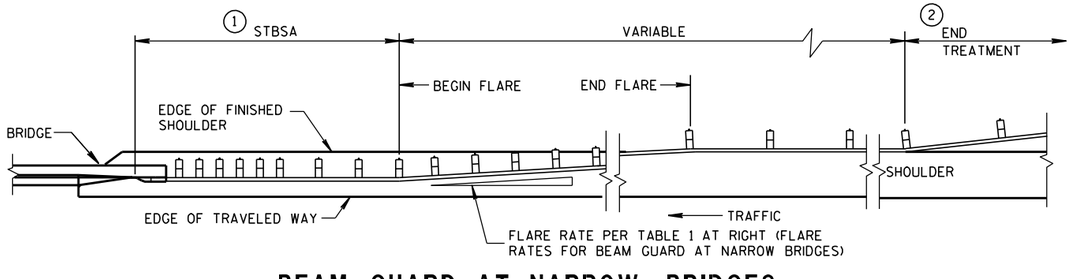

BEAM GUARD AT NARROW BRIDGES

(FLARED TO SHOULDER EDGE, THEN PARALLEL TO ROADWAY)

TABLE 1
FLARE RATES FOR BEAM GUARD AT NARROW BRIDGES

POSTED SPEED (MPH)	FLARE RATE
25	13:1
30	15:1
35	16:1
40	18:1
45	21:1
50	24:1
55	26:1
65	30:1

GENERAL NOTES

DETAILS OF CONSTRUCTION, MATERIALS AND WORKMANSHIP SHALL CONFORM TO THE PERTINENT STANDARD SPECIFICATIONS AND THE APPLICABLE SPECIAL PROVISIONS.

W6 X 9 OR W6 X 8.5 STEEL POSTS WITH NOTCHED PLASTIC BLOCKOUTS ARE ACCEPTABLE ALTERNATIVES FOR 6" X 8" WOOD POSTS WITH WOOD OR PLASTIC BLOCKOUTS. USE APPROVED NOTCHED PLASTIC BLOCKOUTS WITH STEEL POSTS.

THE LOCATIONS AND LENGTHS OF BEAM GUARD ARE SHOWN ELSEWHERE IN THE PLAN.

(1) STEEL THRIE BEAM STRUCTURAL APPROACH (STBSA) - SEE CURRENT SDD 14B20.

(2) USE AN APPROVED END TREATMENT FOR THE TRAFFIC APPROACH SIDE OF BRIDGE/OBSTACLES. USE TYPE 2 ANCHORAGE ONLY AT THE DOWNSTREAM ENDS OF BEAM GUARD LOCATED ALONG ROADWAYS WITH ONE WAY TRAFFIC.

(3)

MINIMUM LATERAL DISTANCE FROM FACE OF BEAM GUARD TO FIXED OBJECT	POST SPACING
3'-6"	3' - 1½"
4'-6"	6' - 3"

STEEL PLATE BEAM GUARD CLASS "A" AT BRIDGES, OBSTACLES AND SIDEROADS/DRIVEWAYS

STATE OF WISCONSIN
DEPARTMENT OF TRANSPORTATION

APPROVED
8-21-07 DATE
/S/ Jerry H. Zogg
ROADWAY STANDARDS DEVELOPMENT ENGINEER
FHWA

6

S.D.D. 14 B 18-6a

BILL OF MATERIALS

NOTE NO.	QTY.	DESCRIPTION
(1)	4	WOOD BREAKAWAY TERMINAL POST: 5½" X 7½" X 3'-9"
(2)	**	STEEL TUBE: OPTION 1 - QUANITY OF 4 TS 8" X 6" X 0.188", 4'-6" LONG OR OPTION 2 - QUANITY OF 2 TS 8" X 6" X 0.188", 6'-0" AND 2 TS 8" X 6" X 0.188", 4'-6" LONG
(3)	2	SOIL PLATE: 2'-0" X 1'-6" X ¼" **
(4)	4	WOOD BREAKAWAY CRT POST: 6" X 8" X 6'-0"
(5)	6	WOOD OFFSET BLOCKS: 6' X 8" X 1'-2"
(6)	1	PIPE SLEEVE: 2" X 5 ½" STANDARD PIPE
(7)	1	BEARING PLATE
(8)	1	BCT CABLE ASSEMBLY
(9)	1	CABLE ANCHOR BOX
(10)	1	STRUT & YOKE
(11)	1	STEEL PLATE BEAM, END PANEL 12 GA. 13'-6½" LONG FOR SKT-350, ET-2000 AND ET-2000 PLUS
(12)	3	STEEL PLATE BEAM: 12 GA. 13'-6½"
(13)	1	ET-2000/ET-2000 PLUS GUARDRAIL EXTRUDER OR SKT-350 IMPACT HEAD: AS FURNISHED BY MANUFACTURER
(14)	1	REFLECTIVE SHEETING TYPE H: 18" X 18"
(15)	1	E.A.T. MARKER POST

GENERAL NOTES

FOLLOW MANUFACTURE'S BOLTING RECOMMENDATIONS. IF NONE ARE AVAILABLE, INSTALL ⅝" ϕ X 1'-6" BUTTON HEAD BOLTS AT ALL POSTS EXCEPT FOR POST 1.

(A) THE SLOPE IN THE AREA BOUNDED BY THE EXTENDED VEHICLE RUNOUT PATH (EVRP), THE HINGE POINT LINE (HPL),AND THE CLEAR ZONE LIMITS (CZL) SHALL BE 4:1 OR FLATTER.

(B) AFTER FINAL ASSEMBLY, RECHECK CABLE TO BE SURE IT IS TAUT AND HAS NOT RELAXED.

(C) THE 13 SLOT FIRST RAIL PANEL MAY BE USED IN LIEU OF THE 3 SLOT RAIL PANEL ON SKT-350 ONLY.

(D) THE TOP OF THE STEEL TUBE ON POSTS 1 THROUGH 4 SHALL NOT BE MORE THAN 3" ABOVE THE FINISH GROUND ELEVATION.

(E) THE CENTER OF THE UPPER 3½" DIAMETER HOLE ON POST 5 THROUGH 8 SHALL BE ¾" ABOVE THE FINISHED GROUND LINE.

(F) SHEETING IS ATTACHED TO 0.040 ALUMINUM SHEET AND ATTACHED TO E.A.T. HEAD USING 4 STAINLESS STEEL SELF-TAPPING SCREWS. ONE SCREW PER CORNER OF E.A.T.

STEEL POSTS SHALL NOT BE ALLOWED FOR USE WITH ENERGY ABSORBING TERMINALS.

DO NOT INSTALL REFLECTORS ON THE FIRST 50 FEET OF THE APPROACH END OF THE ENERGY ABSORBING TERMINAL.

* DO NOT ATTACH BLOCKOUTS TO POSTS 1 AND 2.

** SDD SHOWS 4 - 54 INCH STEEL TUBES WITH SOIL PLATES INSTALLED ON POST 1 AND POST 2. POST 3 AND 4 DO NOT NEED SOIL PLATES. AN ALTERNATIVE INSTALLATION WOULD CONSIST OF 2 - 72 INCH STEEL TUBES ON POST 1 AND POST 2 AND 54 INCH SOIL TUBES ON POSTS 3 AND 4. THE ALTERNATIVE INSTALLATION DOES NOT REQUIRE SOIL PLATES.

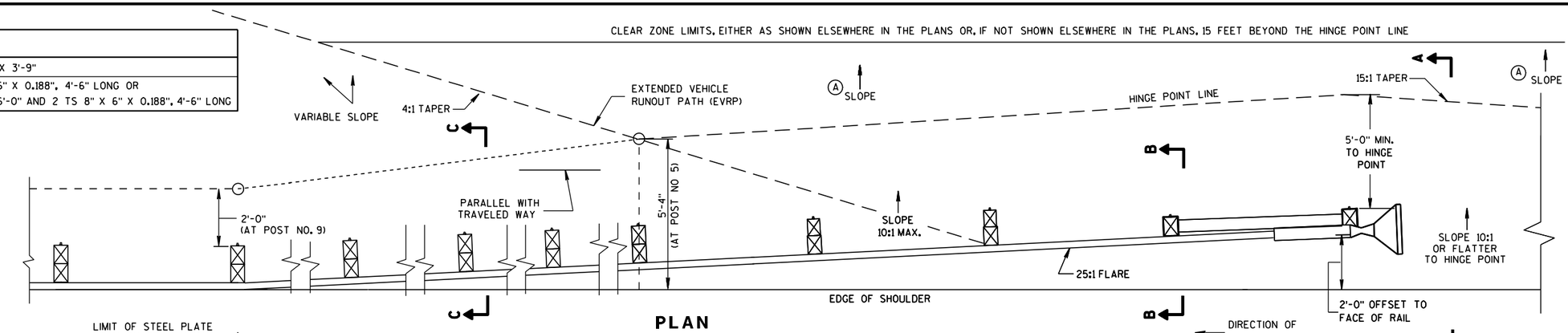

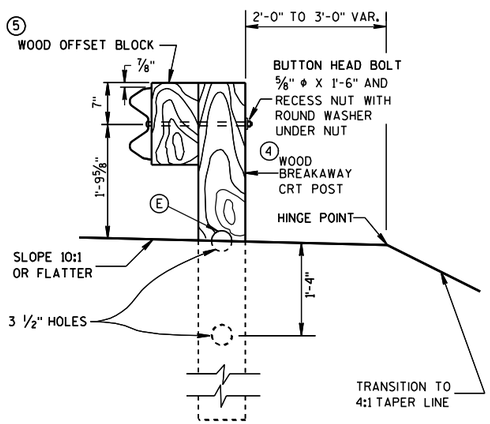

SECTION C-C

TYPICAL AT POST NOS. 6, 8

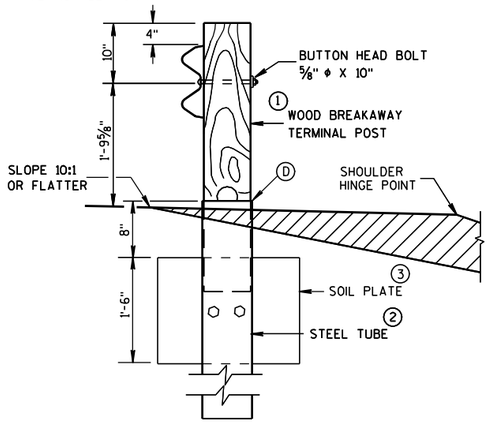

SECTION B-B

TYPICAL AT POST NO. 2*

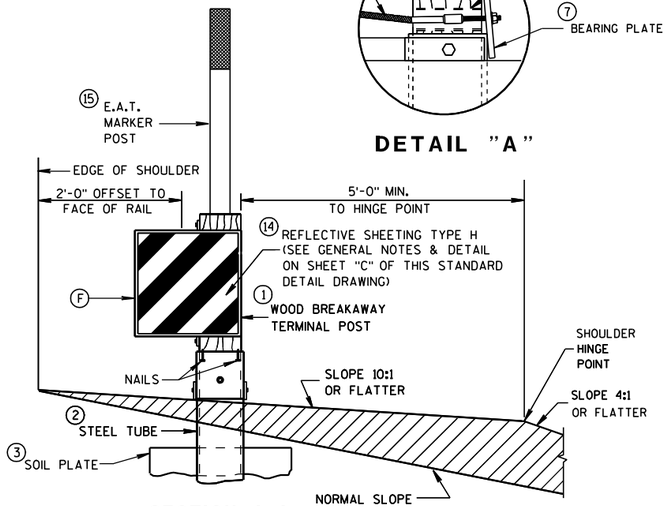

SECTION A-A

TYPICAL AT POST NO. 1*

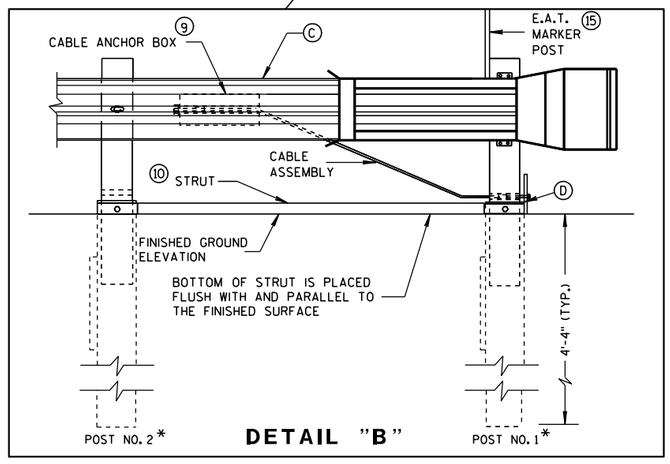

STEEL PLATE BEAM GUARD ENERGY ABSORBING TERMINAL

STATE OF WISCONSIN
DEPARTMENT OF TRANSPORTATION

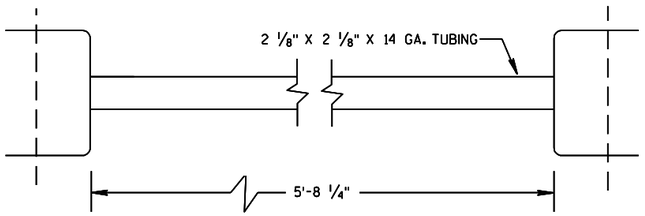

⑩ STRUT DETAIL (SKT-350)

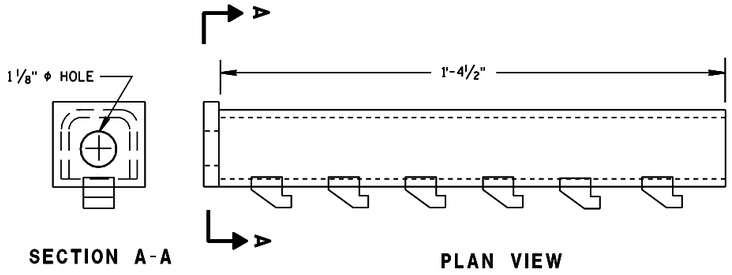

⑨ CABLE ANCHOR BOX (ET-2000/ET-2000 PLUS)

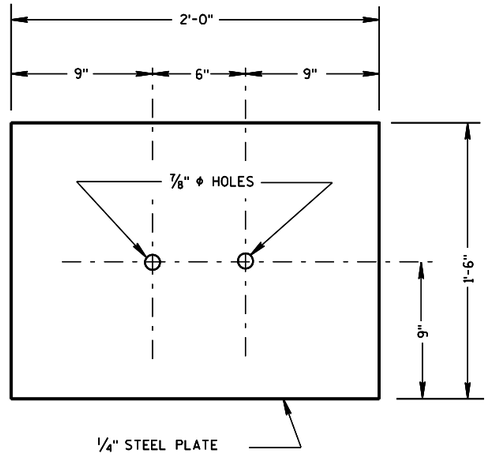

③ SOIL PLATE

(SKT-350, ET-2000/ET-2000 PLUS)

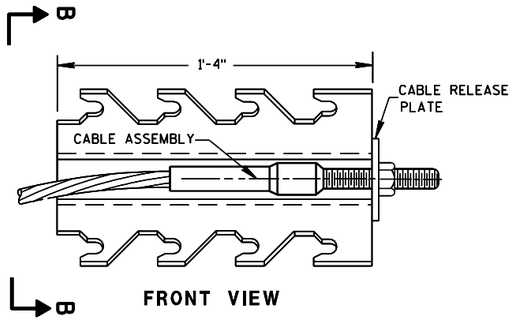

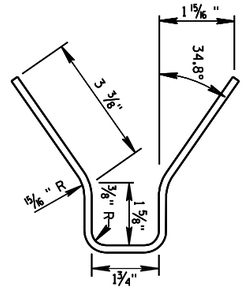

⑨ CABLE ANCHOR BOX (SKT-350)

(SKT-350)

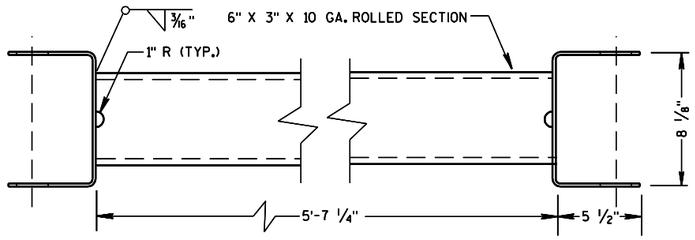

⑩ STRUT DETAIL (ET-2000/ET-2000 PLUS)

(ET-2000/ET-2000 PLUS)

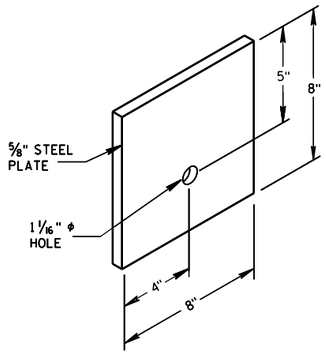

⑦ STEEL BEARING PLATE

(SKT-350, ET-2000/ET-2000 PLUS)

STEEL PLATE BEAM GUARD
ENERGY ABSORBING TERMINAL

STATE OF WISCONSIN
DEPARTMENT OF TRANSPORTATION

6
S.D.D. 14 B 24-7b

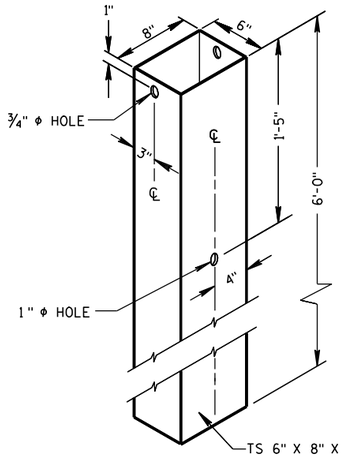

② 72" STEEL TUBE
(POSTS NO. 1-4

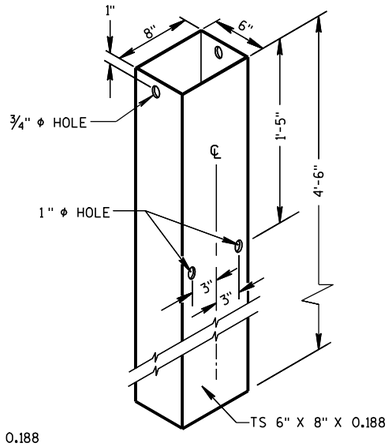

② 54" STEEL TUBE
(POSTS NO. 1-4

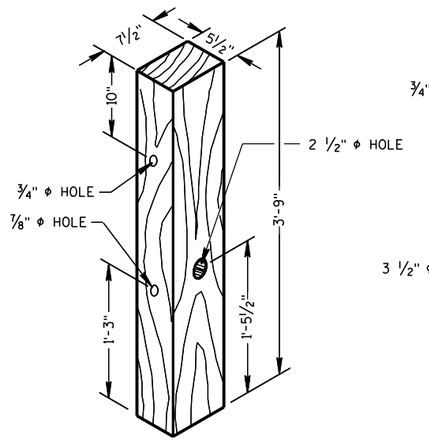

① TERMINAL POST
(POSTS NO. 1-4

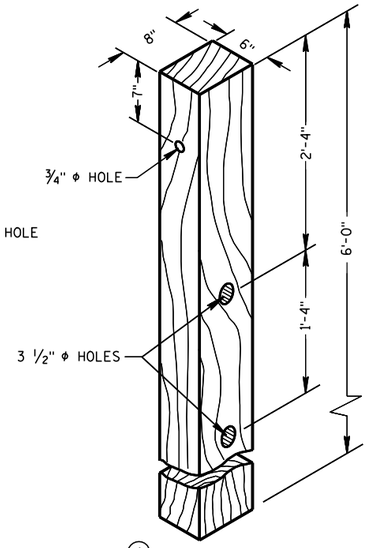

④ CRT POST
(POSTS NO'S 5-8

WOOD BREAKAWAY POSTS

GENERAL NOTES

STEEL PLATE BEAM GUARD, ENERGY ABSORBING TERMINAL SHALL BE PAID FOR AT THE CONTRACT UNIT PRICE EACH, WHICH SHALL INCLUDE HARDWARE, STEEL PLATE BEAM GUARD, POSTS, REFLECTIVE SHEETING AND INSTALLATION AS SHOWN.

WHEN ROCK IS ENCOUNTERED DURING EXCAVATION, A 12 INCH DIA. POST HOLE EXTENDING 20 INCHES DEEP INTO THE ROCK MAY BE USED IF APPROVED BY THE ENGINEER. GRANULAR MATERIAL SHALL BE PLACED IN THE BOTTOM OF THE HOLE APPROXIMATELY 2 ½" INCHES DEEP TO PROVIDE DRAINAGE. THE SOIL TUBES SHALL BE FIELD CUT TO LENGTH, PLACED IN THE HOLE AND BACKFILLED WITH ADEQUATELY COMPACTED MATERIAL EXCAVATED FROM THE HOLE.

SEE APPROVED PRODUCTS LIST FOR ACCEPTABLE E. A. T. MARKER POST.

(G) ½" DIA. X 3" LAG BOLT WITH WASHER.

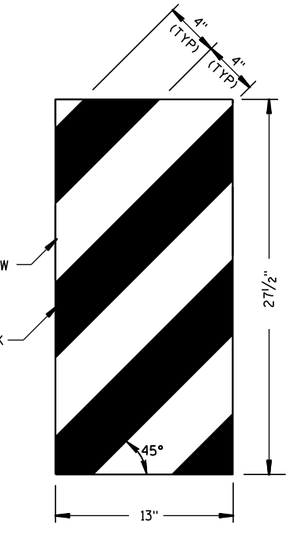

ET-2000 PLUS ONLY

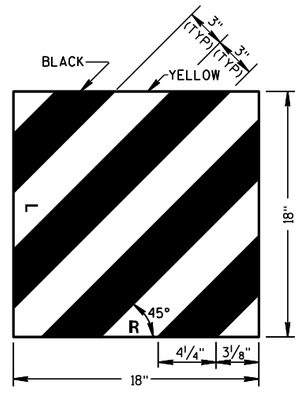

ET-2000 AND SKT-350

⑭ REFLECTIVE SHEETING DETAILS

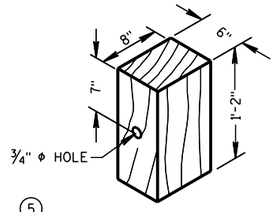

⑤ WOOD OFFSET BLOCK
REQ'D. AT ALL POSTS EXCEPT POST NO'S 1 & 2

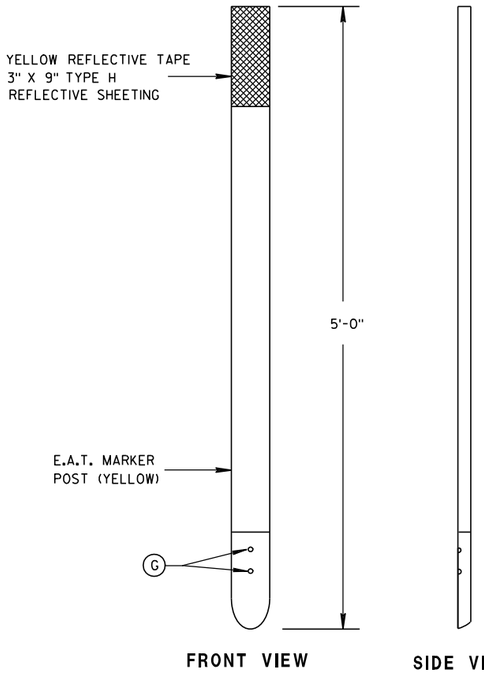

⑮ E.A.T. MARKER POST

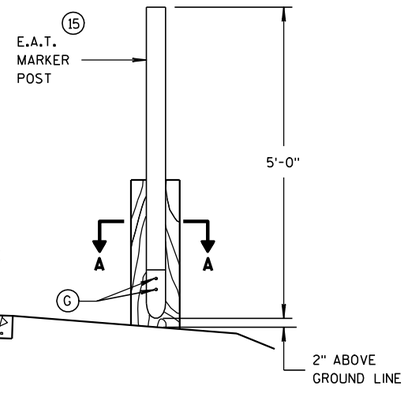

TYPICAL INSTALLATION OF E.A.T.
MARKER POST BACKSIDE OF POST NO. 1
(E.A.T. AND RAIL REMOVED FOR CLARITY)

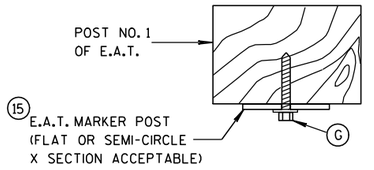

SECTION A-A

STEEL PLATE BEAM GUARD
ENERGY ABSORBING TERMINAL

STATE OF WISCONSIN
DEPARTMENT OF TRANSPORTATION

APPROVED
4-12-10
DATE
/S/ Jerry H. Zogg
ROADWAY STANDARDS DEVELOPMENT ENGINEER
FHWA

6
S.D.D. 14 B 24-7c

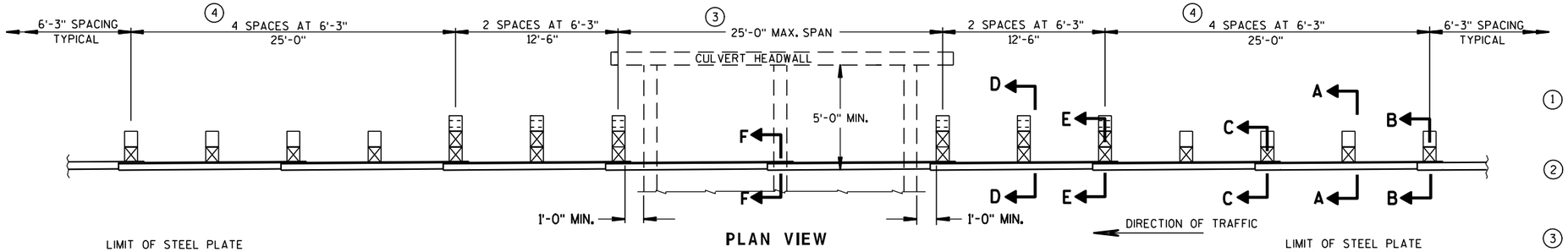

PLAN VIEW

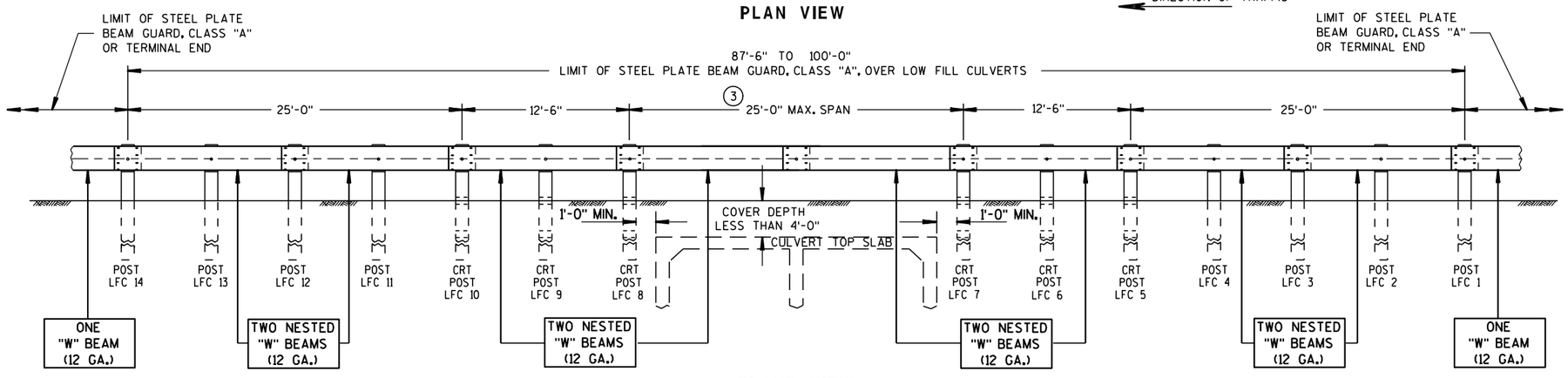

FRONT VIEW

TYPICAL INSTALLATION OF STEEL PLATE BEAM GUARD OVER LOW FILL CULVERTS

GENERAL NOTES

DETAILS OF CONSTRUCTION, MATERIALS AND WORKMANSHIP NOT SHOWN ON THIS DRAWING SHALL CONFORM TO THE PERTINENT REQUIREMENTS OF THE STANDARD SPECIFICATIONS AND THE APPLICABLE SPECIAL PROVISIONS.

(1) MAINTAIN THE NESTING OF EACH NESTED PAIR OF "W" BEAM SECTIONS THROUGH SPLICES. ORIENTATE NESTED "W" BEAM SPLICES IN THE DIRECTION OF TRAFFIC AS THE PLAN VIEW SHOWS. SEE S.D.D. 14 B 15 FOR SPLICE INSTALLATION.

(2) THE CONTRACTOR MAY USE APPROVED PLASTIC BLOCKOUTS IN LIEU OF WOOD BLOCKOUTS. SEE S.D.D. 14 B 15 FOR TYPICAL BLOCKOUT, SPLICE AND REFLECTOR INSTALLATIONS. USE BOLT SIZES AND LENGTHS AS SHOWN ON THIS DETAIL.

(3) PROVIDE 12'-6", 18'-9" AND 25'-0" SPANS ONLY. USE A MAXIMUM OF ONE SPLICE LOCATED ANYWHERE WITHIN THE SPAN SECTION. LOCATE ALL OTHER SPLICES AT BEAM GUARD POSTS.

(4) IN THE FIRST AND LAST 25 FOOT SECTIONS (POSTS LFC 1-4 & LFC 11-14), THE CONTRACTOR MAY USE W6 X 9 OR W6 X 8.5 STEEL POSTS WITH NOTCHED PLASTIC BLOCKOUTS OR 6" X 8" WOOD POSTS WITH EITHER WOOD OR PLASTIC BLOCKOUTS. DO NOT MIX STEEL POSTS WITH NOTCHED PLASTIC BLOCKOUTS AND WOOD POSTS WITH EITHER WOOD OR PLASTIC BLOCKOUTS IN THE SAME INSTALLATION.

(5) WHERE EXISTING CONDITIONS DO NOT PERMIT THE APPROPRIATE EARTHWORK, THE PLAN TYPICAL SECTIONS OR DETAILS MAY SHOW, OR THE ENGINEER MAY ALLOW, THE REDUCTION OR ELIMINATION OF THE 2 FOOT DISTANCE TO THE HINGE POINT. BUILD AS THE PLAN SHOWS OR ENGINEER DIRECTS. IF THE 2 FOOT DISTANCE TO THE HINGE POINT IS REDUCED OR ELIMINATED, INCREASE THE POST SOIL DEPTH TO 4'-6" OR MORE.

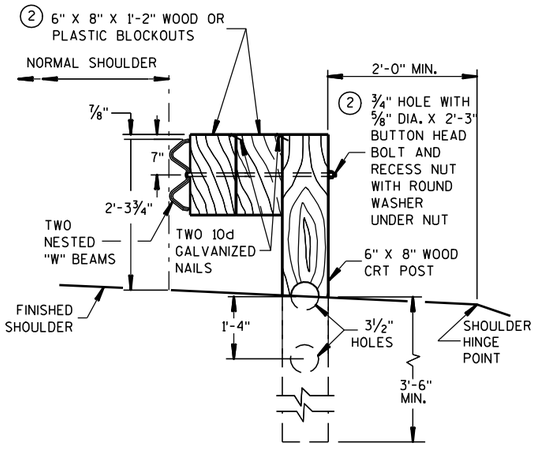

SECTION D-D
TYPICAL CRT POST LFC 6 AND 9

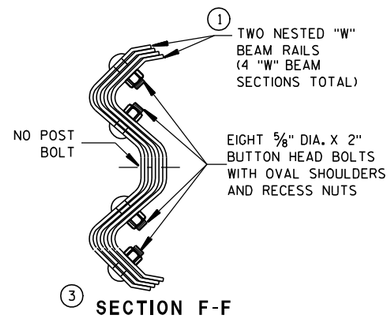

(3) SECTION F-F
BEAM SPLICE IN SPAN OVER CULVERT

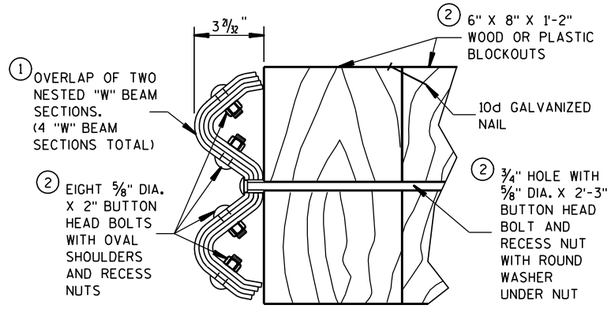

SECTION E-E
TYPICAL CRT POST LFC 5, 7, 8 AND 10

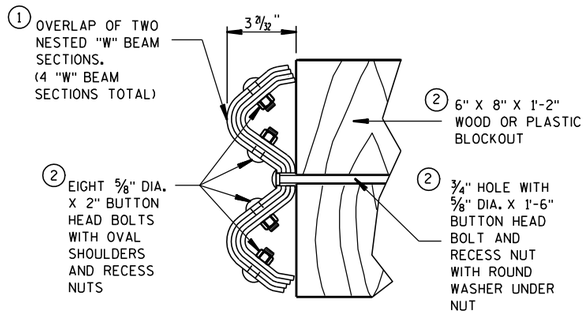

SECTION C-C
TYPICAL AT POSTS LFC 3 AND 12

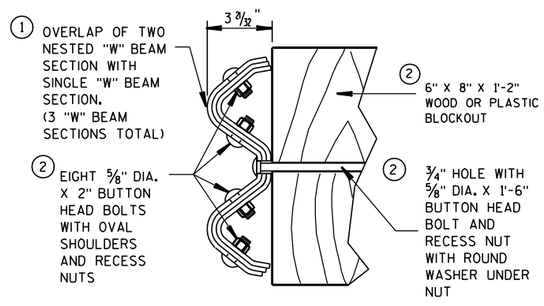

SECTION B-B
TYPICAL AT POSTS LFC 1 AND 14

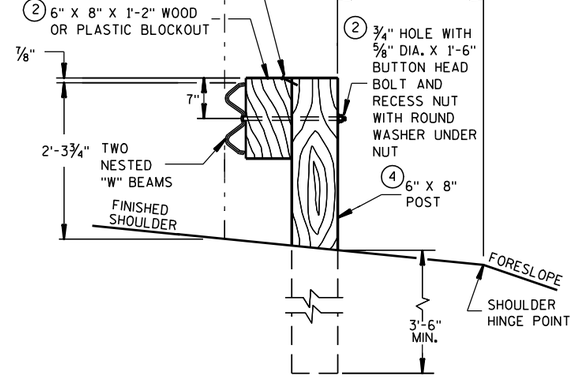

SECTION A-A
TYPICAL AT POST LFC 2,4,11,13

STEEL PLATE BEAM GUARD, CLASS "A", OVER LOW FILL CULVERTS

STATE OF WISCONSIN
DEPARTMENT OF TRANSPORTATION

APPROVED
12/8/00 DATE
/S/ John Have... CHIEF ROADWAY DEVELOPMENT ENGINEER
FHWA

6

S.D.D. 14 B 25-1

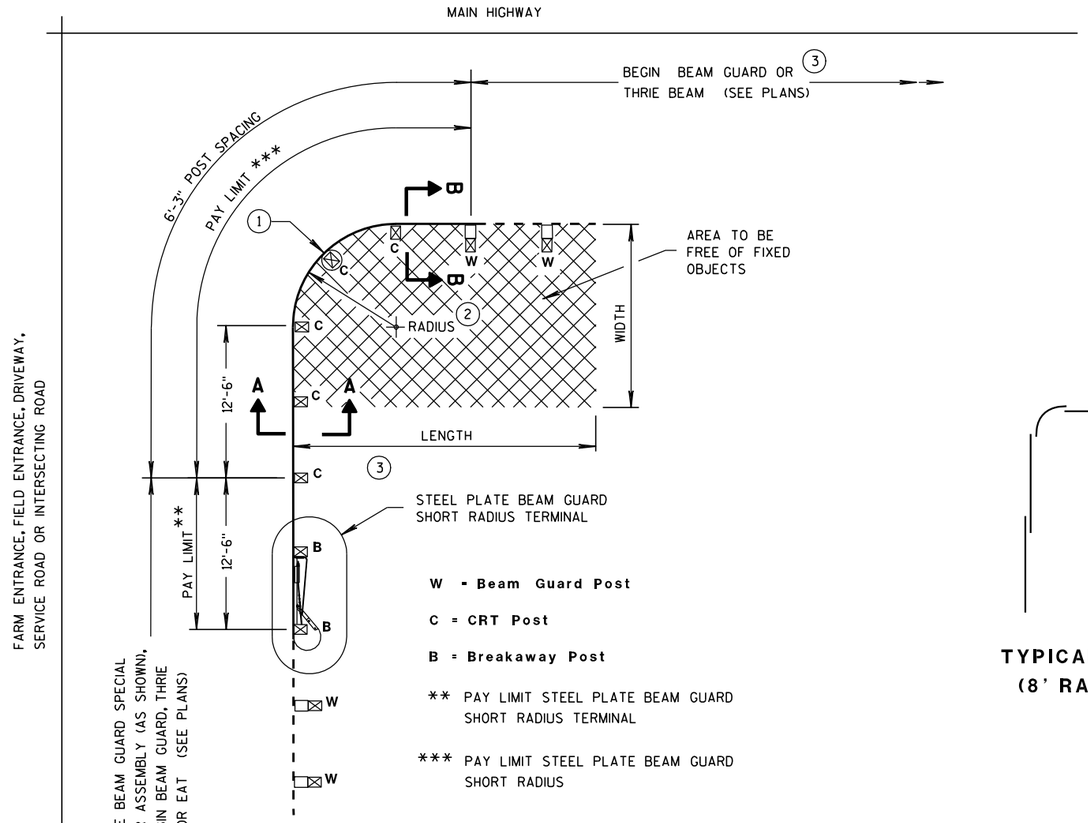

TYPICAL LAYOUT
(8' RADIUS SHOWN)

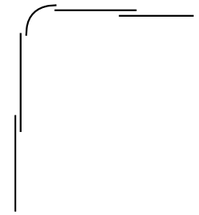

TYPICAL LAP SPLICES
(8' RADIUS SHOWN)

GENERAL NOTES

ALL ANGLES, CHANNELS, AND PLATES SHALL CONFORM TO THE REQUIREMENTS OF ASTM A36 AND THE STRUCTURAL TUBING SHALL CONFORM TO ASTM A 500. WELDING SHALL MEET THE CURRENT REQUIREMENTS OF THE AMERICAN WELDING SOCIETY STRUCTURAL WELDING CODE ANSI/AWS D1.1. ALL STRUCTURAL STEEL SHALL BE GALVANIZED IN ACCORDANCE WITH ASTM A 123. PUNCHING, DRILLING, CUTTING, OR WELDING WILL NOT BE PERMITTED AFTER GALVANIZING. FURNISH AND INSTALL HARDWARE PER STANDARD SPECIFICATION 614.2. UNLESS NOTED OTHERWISE.

SHOP BEND CURVED RAIL SECTIONS.

SEE STANDARD DETAIL DRAWING 14 B 15 FOR OTHER DETAIL.

(1) ON THE 8 FOOT RADIUS INSTALLATION, DO NOT INSTALL BUTTON HEAD BOLT AT CENTER CRT POST.

(2) RADIUS FROM 8' - 36'. SEE PLAN.

(3) HEIGHT TRANSITION MAY BE REQUIRED. SEE PLAN OR PROJECT ENGINEER.

(4) 5/8" ø X 1'-6" BUTTON HEAD BOLT AND RECESS NUT WITH ROUND WASHER UNDER NUT.

RADIUS	NUMBER OF CRT POSTS	*NUMBER AND LENGTH OF CURVED RAILS	REQUIRED AREA FREE OF FIXED OBJECTS (LENGTH x WIDTH)
8'	5	1 at 12.5'	25' x 15'
16'	7	1 at 25'	30' x 15'
24'	9	1 at 25' and 1 at 12.5'	40' x 20'
32'	11	2 at 25'	50' x 20'

* THE NUMBER OF RAILS IS BASED ON A 90° INTERSECTION. SEE PLAN FOR NON 90° INSTALLATIONS.

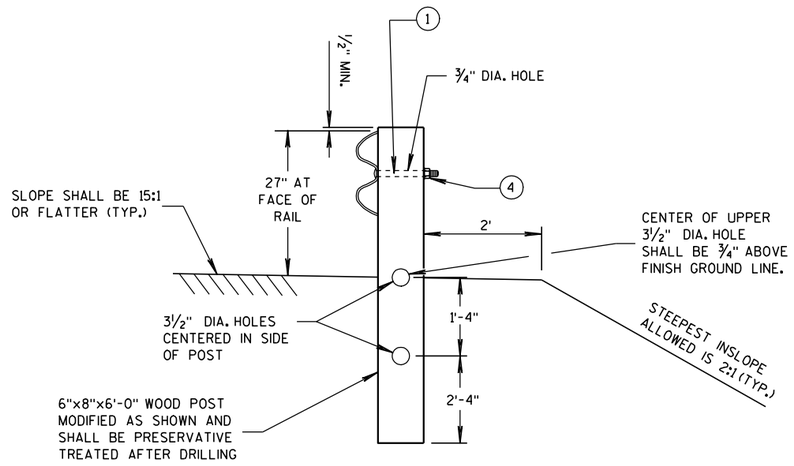

SECTION A-A
(CRT POST)

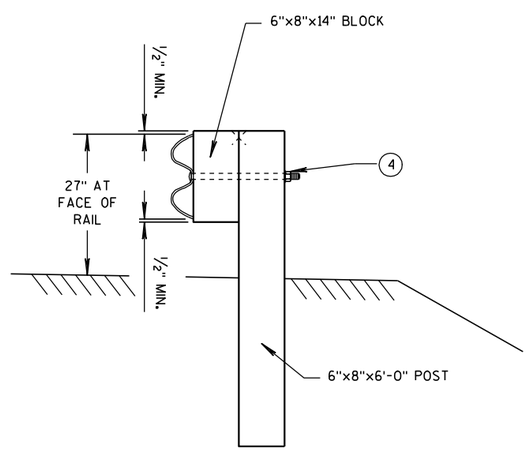

SECTION B-B
(BEAM GUARD POST)

STEEL PLATE BEAM GUARD SHORT RADIUS TERMINAL

STEEL PLATE BEAM GUARD SHORT RADIUS TERMINAL

STATE OF WISCONSIN
DEPARTMENT OF TRANSPORTATION

6

S.D.D. 14 B 27-1a

6

S.D.D. 14 B 27-1a

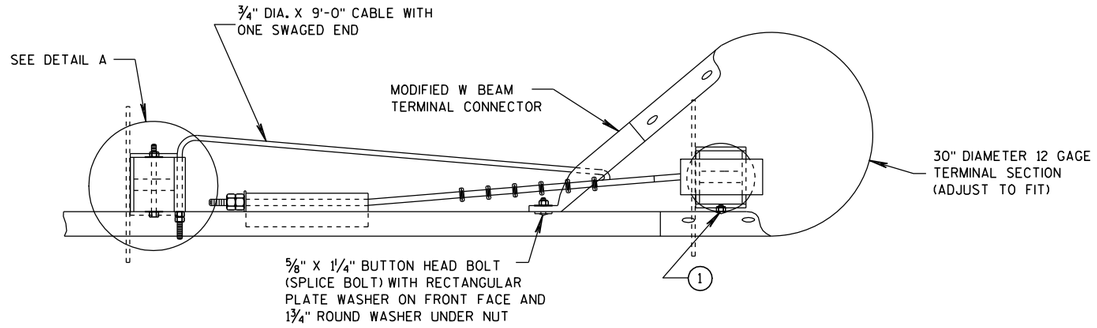

PLAN VIEW

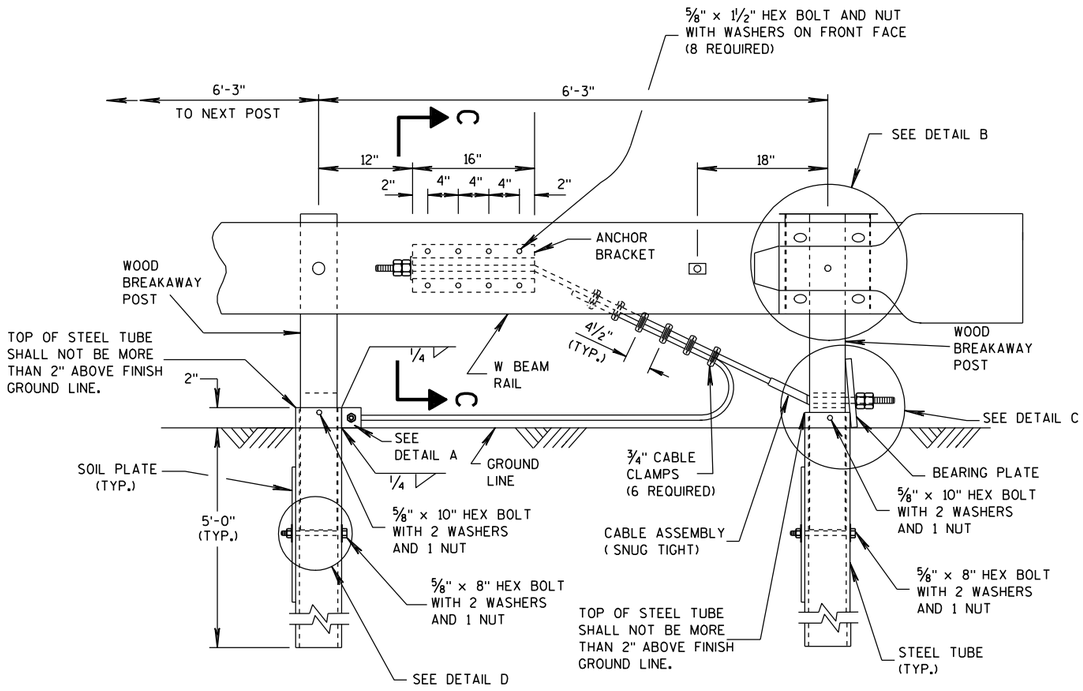

ELEVATION VIEW

STEEL PLATE BEAM GUARD SHORT RADIUS TERMINAL

GENERAL NOTES

(1) ATTACH W BEAM RAIL TO THE STEEL PIPE WITH A ⅝" X 2" BUTTON HEAD BOLT WITH NO WASHER. CONNECTION TO THE POST IS NOT REQUIRED.

INSTALL GALVANIZED ¾" (6X19) PREFORMED WIRE OR INDEPENDENT WIRE ROPE CORE CONFORMING TO AASHTO M 30. MANUFACTURE WIRE ROPE OUT OF IMPROVED PLOW STEEL WITH A MINIMUM BREAKING STRENGTH OF 42,800 PSI.

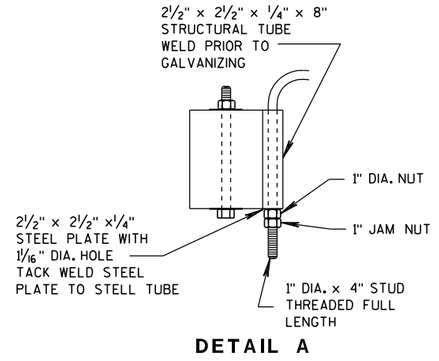

DETAIL A

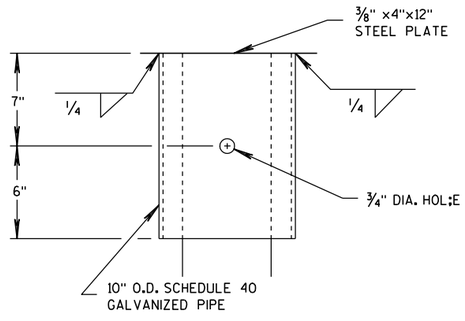

DETAIL B

(BEAM GUARD AND TERMINAL SECTION NOT SHOWN)

STEEL PLATE BEAM GUARD SHORT RADIUS TERMINAL

STATE OF WISCONSIN
DEPARTMENT OF TRANSPORTATION

6

S.D.D. 14 B 27-1b

6

S.D.D. 14 B 27-1b

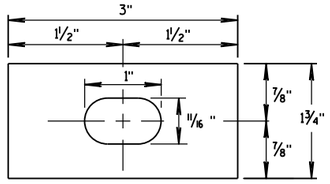

RECTANGULAR PLATE WASHER

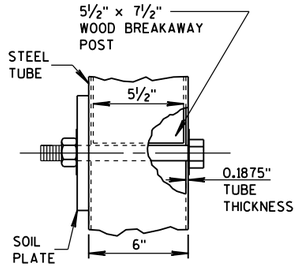

DETAIL D

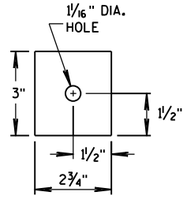

END PLATE

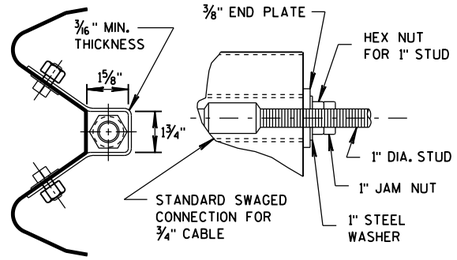

SECTION C-C
(END PLATE REMOVED)

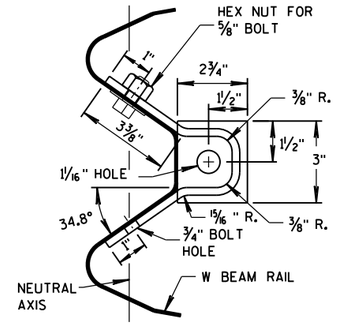

ANCHOR BRACKET

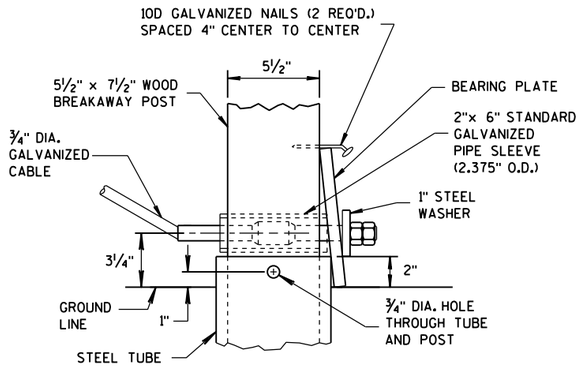

DETAIL C

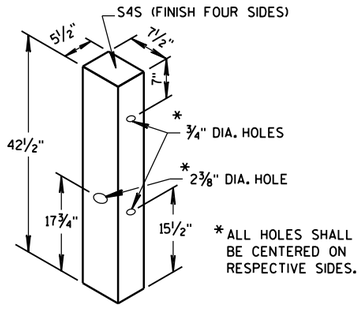

WOOD BREAKAWAY POST

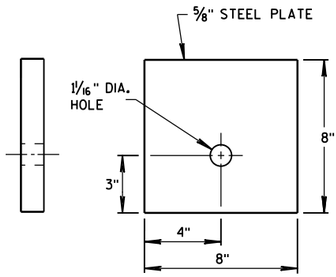

BEARING PLATE

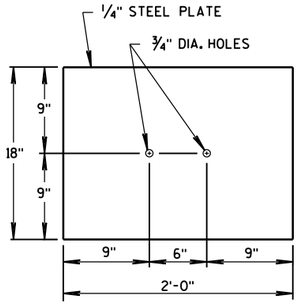

SOIL PLATE

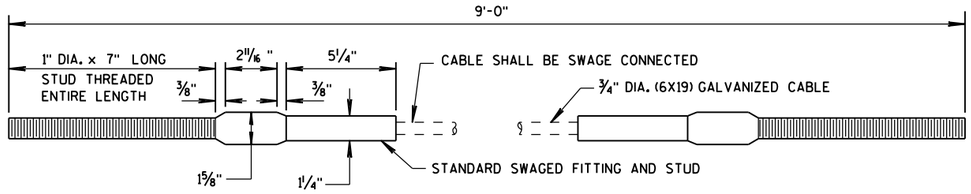

CABLE ASSEMBLY

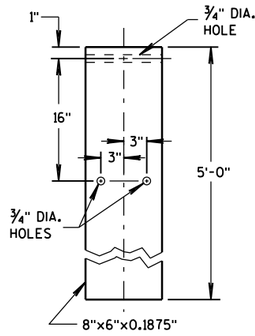

STEEL TUBE

STEEL PLATE BEAM GUARD
SHORT RADIUS TERMINAL

STATE OF WISCONSIN
DEPARTMENT OF TRANSPORTATION

APPROVED
12/18/08 — DATE
/S/ Jerry H. Zogg — ROADWAY STANDARDS DEVELOPMENT ENGINEER
FHWA

6

S.D.D. 14 B 27-1c

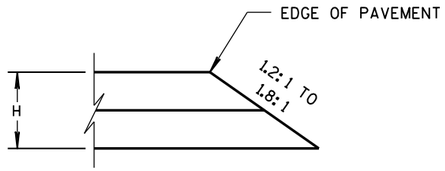

CONSTRUCTED WITH FINAL TWO LAYERS

FOR H 5" OR LESS

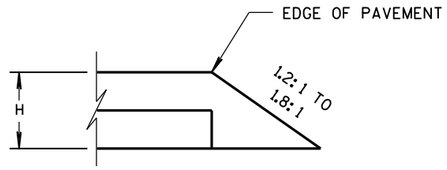

CONSTRUCTED WITH FINAL LAYER

FOR H 5" OR LESS

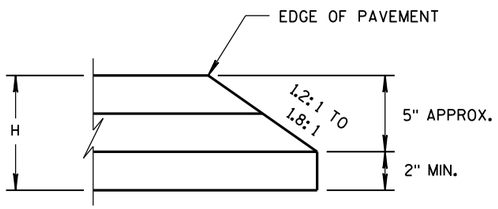

CONSTRUCTED WITH FINAL TWO LAYERS

FOR H GREATER THAN 5"

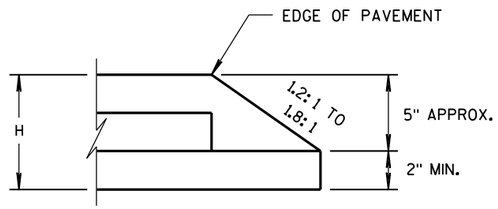

CONSTRUCTED WITH FINAL LAYER

FOR H GREATER THAN 5"

HMA PAVEMENT AND HMA OVERLAYS

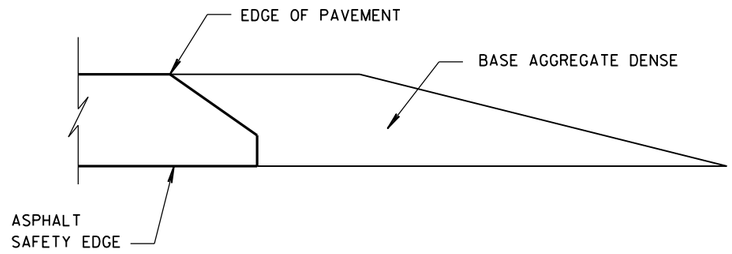

FINISHED SHOULDER AGGREGATE PLACEMENT

6

6

S.D.D. 14 B 29-1

S.D.D. 14 B 29-1

SAFETY EDGE SM

STATE OF WISCONSIN
DEPARTMENT OF TRANSPORTATION

APPROVED

11/30/2012
DATE

/S/ Jerry H. Zoda
ROADWAY STANDARDS DEVELOPMENT ENGINEER

FHWA

GENERAL NOTES

1. WOOD OR STEEL POSTS (w6X9 OR w6X8.5) MAY BE USED. DO NOT INTERMIX WOOD AND STEEL POSTS. INSTALL STEEL POSTS WITH HOLES ON APPROACHING TRAFFIC SIDE.

2. USE WOOD OR APPROVED PLASTIC BLOCKOUTS. WOOD BLOCKOUTS MAY BE CONSTRUCTED OUT OF TWO OR MORE WOOD BLOCKOUTS. SEE ALTERNATE WOOD BLOCKOUT DETAIL. DIMENSIONS OF APPROVED PLASTIC BLOCKOUTS MAY VARY.

3. IF ROCK IS ENCOUNTERED DURING EXCAVATION, PROVIDE A HOLE 12 INCHES IN DIAMETER EXTENDING 20 INCHES DEEP INTO THE ROCK. PLACE APPROXIMATELY 2½INCHES OF GRANULAR MATERIAL IN THE BOTTOM OF THE HOLE. CUT THE POSTS THE TO LENGTH AMD INSTALL. BACKFILL WITH EXCAVATED MATERIAL AND COMPACT. BACKFILL IS TO BE FREE OF LARGE ROCKS.

4. WHEN THE DISTANCE FROM BACK OF POST TO SHOULDER HINGE POINT IS LESS THAN 2 FEET INSTALL LONGER POST AT HALF POST SPACING (K).

5. FOR NEW MGS INSTALLATION TOP OF W-BEAM RAIL TOLERANCE IS ± 1". FOR EXISTING MGS INSTALLATION TOP OF W-BEAM IS BETWEEN 27¾" TO 32".

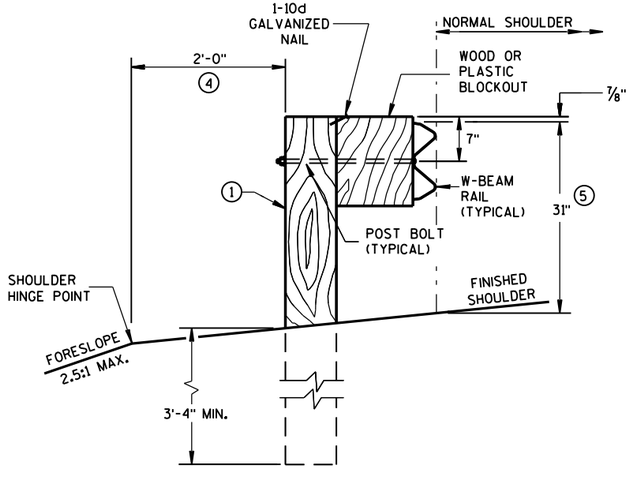

END VIEW

LOCATED ALONG A ROADWAY SHOULDER
STANDARD INSTALLATION

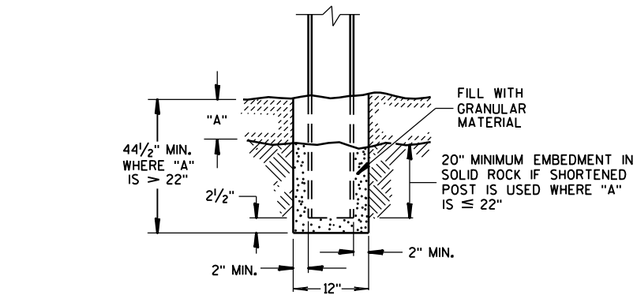

END VIEW

SETTING STEEL OR WOOD POST IN ROCK ③

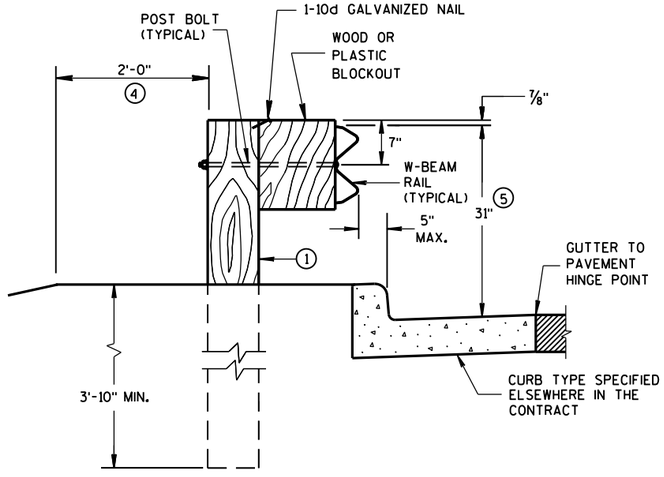

END VIEW

LOCATED ALONG A CURBED ROADWAY

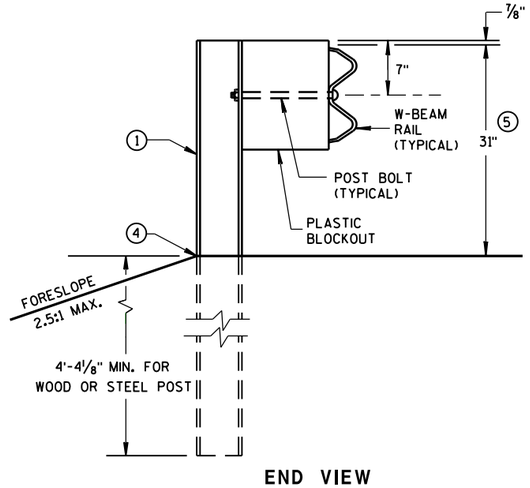

END VIEW

MGS LONGER POST AT HALFPOST SPACING W BEAM (K)

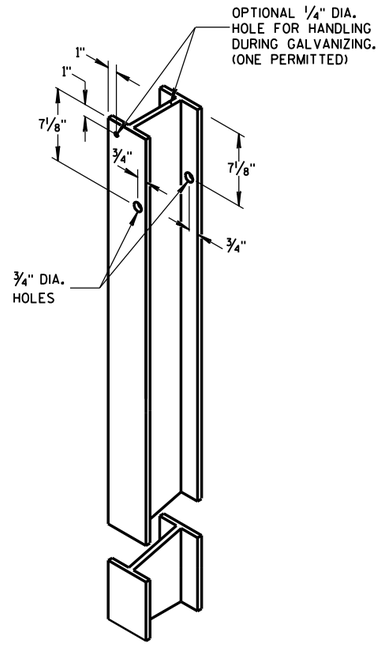

STEEL POST &
HOLE PUNCHING DETAIL
(w6X9) ①

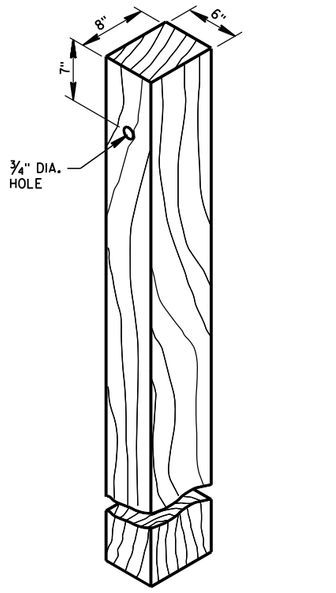

WOOD POST
(6" X 8") NOMINAL ①

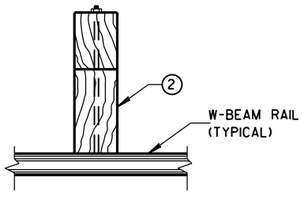

PLAN VIEW
WOOD POST,
BLOCKOUT & BEAM

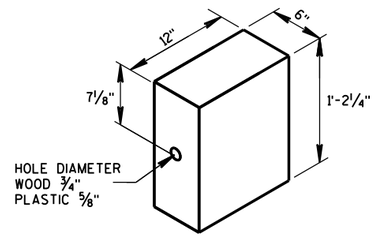

WOOD OR
PLASTIC BLOCKOUT ②

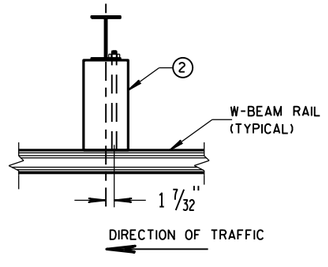

PLAN VIEW
STEEL POST,
PLASTIC BLOCKOUT & BEAM

MIDWEST GUARDRAIL SYSTEM
(MGS) GUARDRAIL

STATE OF WISCONSIN
DEPARTMENT OF TRANSPOI

6
S.D.D. 14 B 42-2a

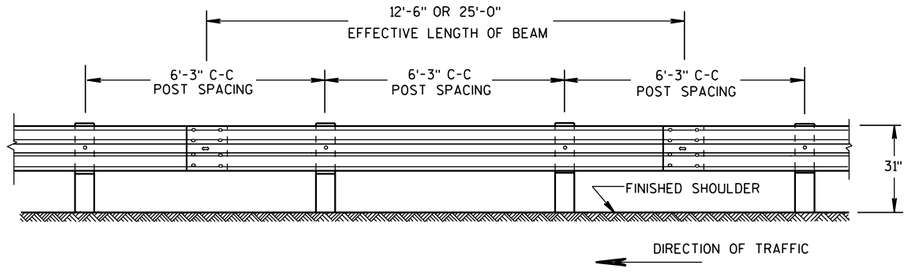

FRONT VIEW

POST SPACING STANDARD INSTALLATION

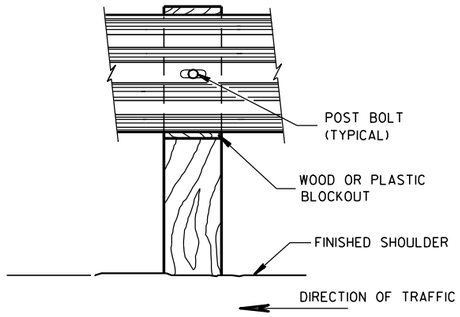

FRONT VIEW AT WOOD POST

GENERAL NOTES

1. PROVIDE TYPE "H" SILVER REFLECTIVE SHEETING ON ALL REFLECTORS EXCEPT THOSE LOCATED ALONG THE LEFT EDGE OF ONE-WAY ROADWAYS, WHICH SHALL BE PROVIDED WITH TYPE "H" YELLOW REFLECTIVE SHEETING.
2. DO NOT INSTALL REFLECTORS ON THE FIRST 50 FEET OF THE APPROACH END OF THE ENERGY ABSORBING TERMINAL. RAIL SPLICE LOCATIONS ARE THE ONLY ACCEPTABLE LOCATIONS FOR REFLECTORS.
3. REVERSE EVERY OTHER REFLECTOR FOR 2-WAY VISIBILITY. THE CONTRACTOR MAY FURNISH TWO-SIDED REFLECTORS IN LIEU OF ONE-SIDED REFLECTORS.
4. PROVIDE AN ANGLE OF BEND OF 90° ± 1° FOR TWO-SIDED REFLECTORS.
5. 25 FEET OF HALF POST SPACING IS REQUIRED ON APPROACH AND DEPARTURE ENDS OF QUARTER POST SPACING.

POST BOLTS ARE A 5/8" DIAMETER ASTM A307 GUARDRAIL BOLT. A POST BOLT REQUIRES 5/8" DIAMETER A563A DOUBLE RECESSED (DR) HEAVY HEX NUT AND 5/8" DIAMETER F844 FLAT WASHER. POST BOLTS MAY BE LONGER IF MULTIPLE BLOCKOUTS ARE BEING USED.

GUARD RAIL SPLICE BOLTS ARE A 5/8" DIAMETER ASTM A307 GUARDRAIL HEAD BOLT. A GUARDRAIL SPLICE BOLT REQUIRES 5/8" DIAMETER A563A DOUBLE RECESSED (DR) HEAVY HEX NUT.

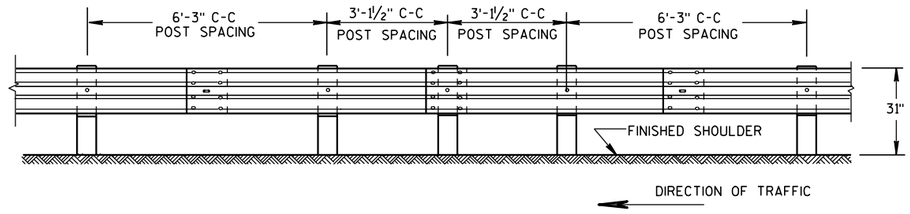

FRONT VIEW

HALF POST SPACING (HS) AND HALF POST SPACING WITH LONGER POSTS (K)

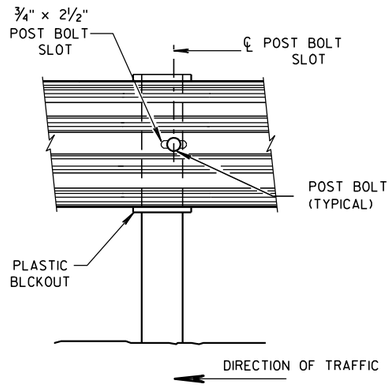

FRONT VIEW AT STEEL POST

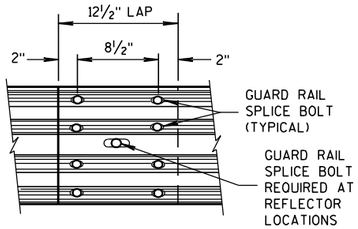

FRONT VIEW

MID-SPAN BEAM SPLICE

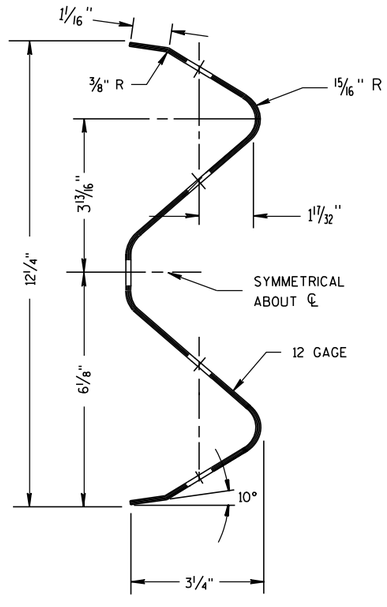

SECTION THRU W-BEAM RAIL

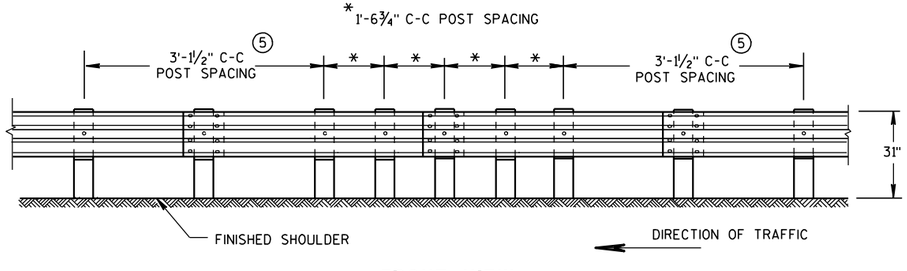

FRONT VIEW

QUARTER POST SPACING (QS)

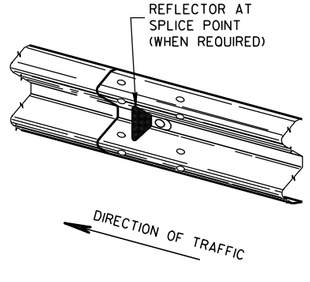

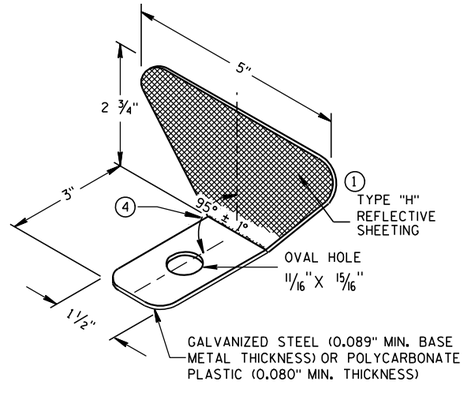

ONE SIDED REFLECTOR DETAIL AND TYPICAL INSTALLATION ①

REFLECTOR SPACING ②

	BEAM GUARD LENGTH	REFLECTOR SPACING	NO. SURFACES REFLECTORIZED	MIN. NO. REFLECTORS
ONE WAY TRAFFIC	< 200'	50' C-C	1	3
	> 200'	100' C-C	1	
TWO WAY TRAFFIC	< 200'	25' C-C	1 ③	6
	> 200'	50' C-C	1	
TWO WAY TRAFFIC	< 200'	50' C-C	2 ④	3
	> 200'	100' C-C	2	

MIDWEST GUARDRAIL SYSTEM
(MGS) GUARDRAIL

STATE OF WISCONSIN
DEPARTMENT OF TRANSPORTATION

S.D.D. 14 B 42-2b

S.D.D. 14 B 42-2b

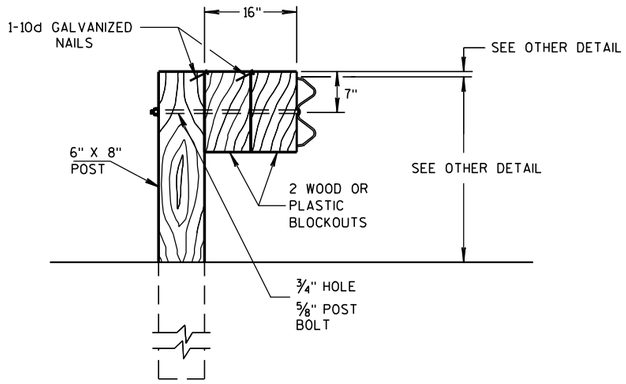

DETAIL FOR 16" BLOCKOUT DEPTH

IT IS ACCEPTABLE TO USE BLOCKOUTS UP TO 16" DEEP TO INCREASE THE POST OFFSET TO AVOID UNDERGROUND OBSTACLES. THERE IS NO LIMIT TO THE NUMBER OF POSTS THAT CAN HAVE ADDITIONAL BLOCKOUTS UP TO 16" DEEP.

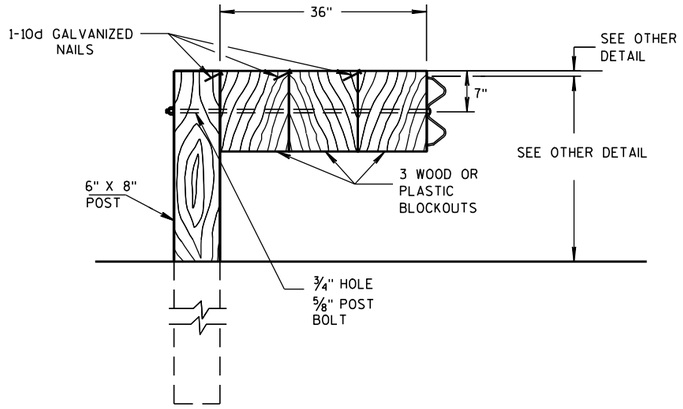

DETAIL FOR 36" BLOCKOUT DEPTH

NOTES: UNDER SPECIAL CIRCUMSTANCES, SUCH AS AVOIDING OBSTACLES THAT ARE NOT RELOCATED, IT IS ACCEPTABLE TO INSTALL ADDITIONAL BLOCKOUTS TO OBTAIN UP TO 36" DEPTH FOR ONE OR TWO POSTS IN A SECTION OF GUARDRAIL.

DO NOT USE 16" OR 36" BLOCKOUTS IF IT CAUSES THE POST TO BE DRIVEN BEYOND SHOULDER HINGE POINT OR CAUSES A FIXED OBJECT TO BE WITHIN THE DEFLECTION DISTANCE OF THE BARRIER.

NOTE: 1. ALL FILLETS SHALL HAVE A MINIMUM RADIUS OF 1/16".
2. IF THE BOLT EXTENDS MORE THAN 1/4" FROM THE NUT THE BOLT SHOULD BE TRIMMED BACK.

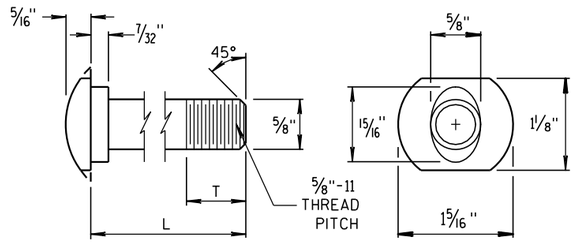

POST BOLT TABLE

L	T (MIN.)
1 1/4"	1 1/8"
2"	1 3/4"
10"	4"
14"	4 1/16"
18"	4"
21"	4 1/16"
25"	4"

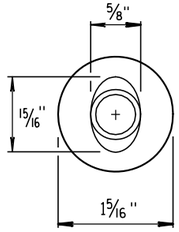

ALTERNATE BOLT HEAD

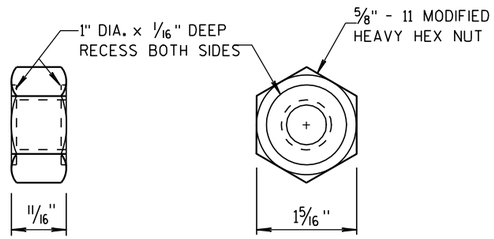

POST BOLT AND RECESS NUT

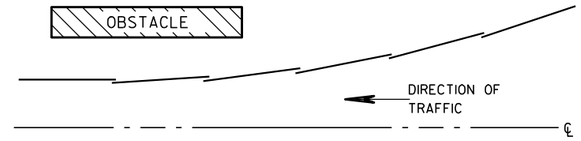

PLAN VIEW

BEAM LAPPING DETAIL

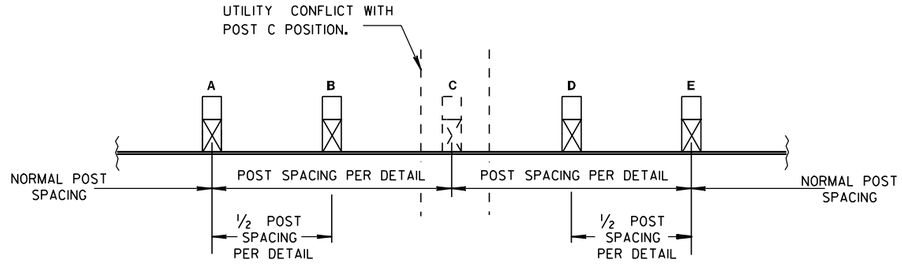

POST DRIVING FOR CONTINUOUS UNDERGROUND OBSTRUCTION

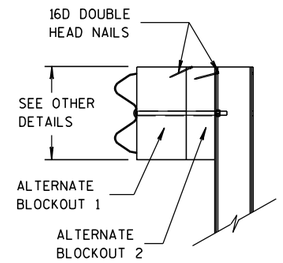

SIDE VIEW

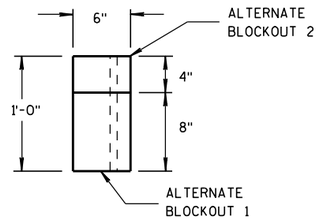

TOP VIEW

ALTERNATE WOOD BLOCKOUT DETAIL

MIDWEST GUARDRAIL SYSTEM (MGS) GUARDRAIL

STATE OF WISCONSIN
DEPARTMENT OF TRANSPORTATION

APPROVED

11/15/2011
DATE

/S/ Jerry H. [illegible]
ROADWAY STANDARDS ENGINEER

FHWA

ENT

6

S.D.D. 14 B 42-2c

6

S.D.D. 14 B 42-2c

GENERAL NOTES

POSTS 1 THROUGH 3 ARE CRT POSTS.
ALL OTHER POSTS SHALL BE WOOD OR STEEL.

SEE SDD 14 B 42 FOR MORE DETAILS.

Ⓐ THE MINIMUM OFFSET FROM BACK OF POST TO BACK OF STRUCTURE IS ZERO. LARGER OFFSETS ARE ACCEPTABLE.

Ⓑ FLARE FOR MGS EAT SHOWN. IF INSTALLING MGS NO FLARE NEEDED.

Ⓒ VALUES SHOWN ON DRAWING REPRESENT THE MAXIMUM LENGTH. SHORTER DIMENSIONS ARE POSSIBLE. SEE OTHER SECTION OF PLAN FOR MORE INFORMATION.

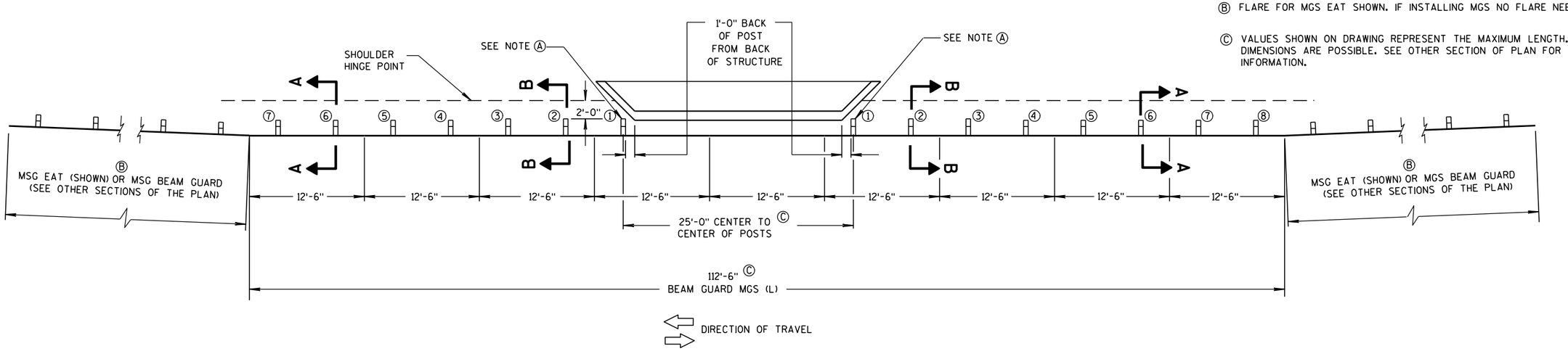

PLAN VIEW

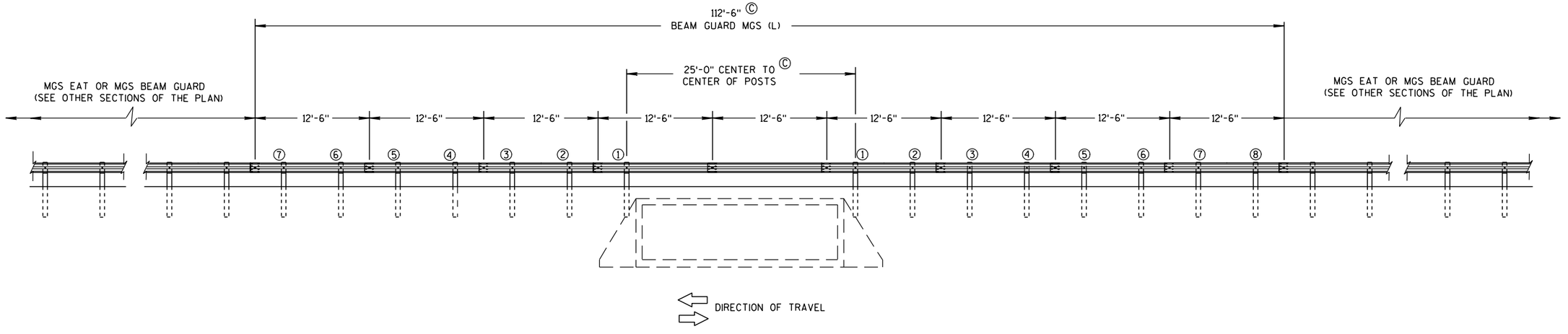

ELEVATION VIEW

MIDWEST GUARDRAIL SYSTEM LONG SPAN MGS (L) TWO-WAY TRAFFIC

MIDWEST GUARDRAIL SYSTEM
LONG SPAN MGS (L)

STATE OF WISCONSIN
DEPARTMENT OF TRANSPO...

6

S.D.D. 14 B 43-2a

GENERAL NOTES

POSTS 1 THROUGH 3 ARE CRT POSTS.
ALL OTHER POSTS SHALL BE WOOD OR STEEL.

SEE SDD 14 B 42 FOR MORE DETAILS.

Ⓐ THE MINIMUM OFFSET FROM BACK OF POST TO BACK OF STRUCTURE IS ZERO. LARGER OFFSETS ARE ACCEPTABLE.

Ⓑ FLARE FOR MGS EAT SHOWN. IF INSTALLING MGS NO FLARE NEEDED.

Ⓒ VALUES SHOWN ON DRAWING REPRESENT THE MAXIMUM LENGTH. SHORTER DIMENSIONS ARE POSSIBLE. SEE OTHER SECTION OF PLAN FOR MORE INFORMATION.

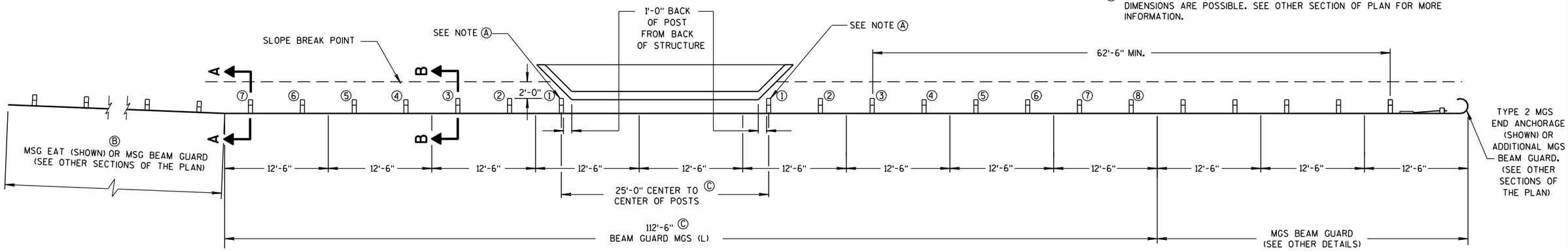

PLAN VIEW

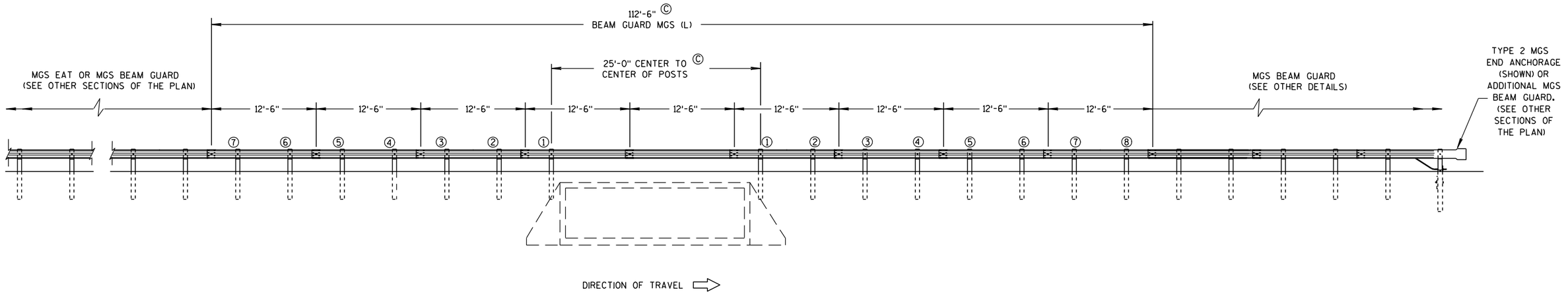

ELEVATION VIEW

MIDWEST GUARDRAIL SYSTEM LONG SPAN MGS (L) ONE-WAY TRAFFIC

MIDWEST GUARDRAIL SYSTEM LONG SPAN MGS (L)	
STATE OF WISCONSIN DEPARTMENT OF TRANSPORTATION	

6

S.D.D. 14 B 43-2b

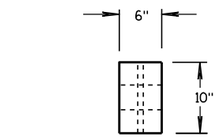

PLAN VIEW

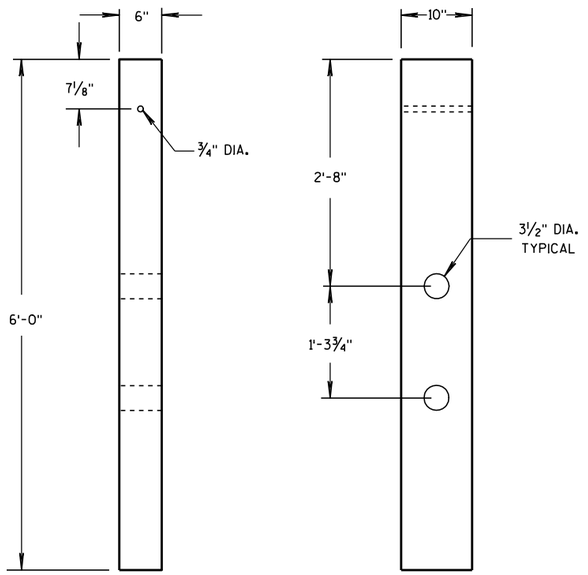

FRONT VIEW SIDE VIEW

CRT WOOD POST

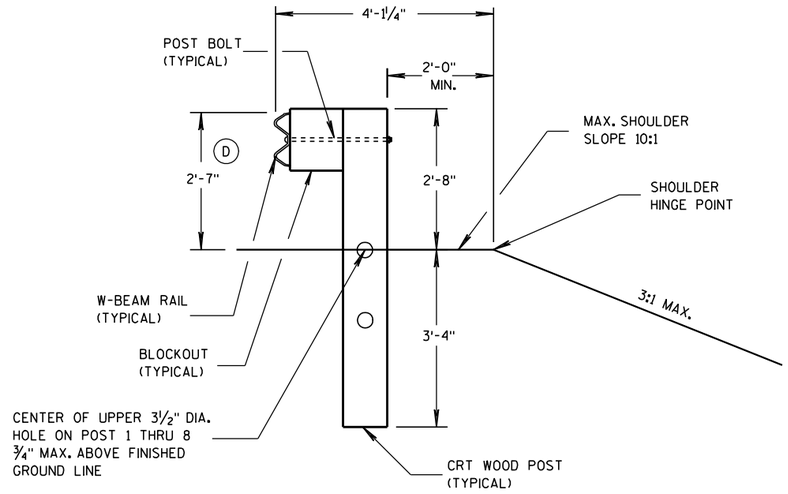

SECTION B-B

POSTS NO. 1-3

SEE OTHER DETAILS

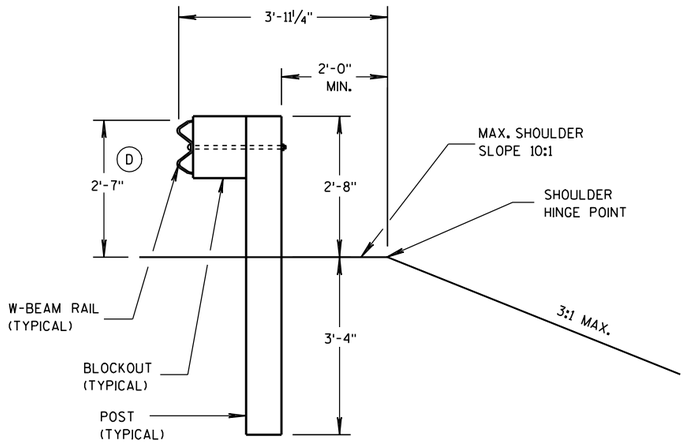

SECTION A-A

POSTS NO. 4-8

SEE OTHER DETAILS

GENERAL NOTES

(D) TOLERANCE FOR TOP OF W-BEAM RAIL IS ± 1".

MIDWEST GUARDRAIL SYSTEM
LONG SPAN MGS (L)

STATE OF WISCONSIN
DEPARTMENT OF TRANSPORTATION

APPROVED

8/31/2012
DATE

/S/ Jerry H. Zogg
ROADWAY STANDARDS ENGINEER

FHWA

6

S.D.D. 14 B 43-2c

GENERAL NOTES

(A) THE SLOPE IN THE AREA BOUNDED BY THE EXTENDED VEHICLE RUNOUT PATH (EVRP), THE HINGE POINT LINE (HPL),AND THE CLEAR ZONE LIMITS (CZL) SHALL BE 4:1 OR FLATTER.

(B) AFTER FINAL ASSEMBLY, RECHECK CABLE TO BE SURE IT IS TAUT AND HAS NOT RELAXED.

(C) DIFFERENT MANUFACTURES REQUIRE DIFFERENT PERFORATED W-BEAM RAIL END PANELS. SEE MANUFACTURES INFORMATION.

(D) THE TOP OF THE STEEL TUBE ON POST 1 AND POST 2 SHALL NOT BE MORE THAN 3" ABOVE THE FINISH GROUND ELEVATION.

(F) SHEETING IS ATTACHED TO 0.040 ALUMINUM SHEET AND ATTACHED TO E.A.T. HEAD USING 4 STAINLESS STEEL SELF-TAPPING SCREWS. ONE SCREW PER CORNER OF E.A.T.

(G) ½" DIAMETER X 3" LONG LAG BOLT AND WASHER.

(H) HARDWARE VARIES BETWEEN DIFFERENT MANUFACTURES. SEE MANUFACTURE'S DRAWING FOR INFORMATION.

(I) DIMENSIONS MAY VARY. SEE MANUFACTURE'S INFORMATION.

SEE SDD 14B42 FOR MORE INFORMATION.

* DO NOT ATTACH BLOCKOUTS TO POSTS 1 AND 2.

DO NOT INSTALL REFLECTORS ON THE FIRST 50 FEET OF THE APPROACH END OF THE ENERGY ABSORBING TERMINAL.

W-BEAM RAIL SPLICES ARE LOCATED AT POST NUMBER 3, AND BETWEEN POST 5 AND 6, BETWEEN POSTS 7 AND 8, AND MIDDLE OF THE SPAN AFTER POST 9.

PATTERN AND COLORS ON REFLECTIVE SHEETING TYPE H ARE TO CONFORM TO OM3-L OR OM3-R OF THE MANUAL ON UNIFORM TRAFFIC CONTROL DEVICES.

THE CENTER OF THE UPPER 3½" DIAMETER HOLE ON POST NUMBER 3 THROUGH POST 9 IS TO BE FLUSH WITH THE GROUND LINE (± ¾")

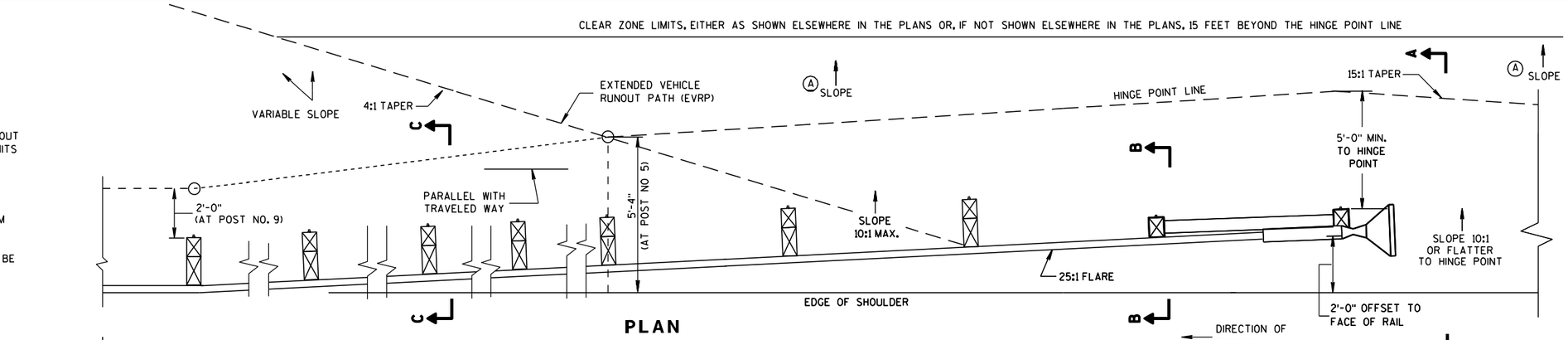

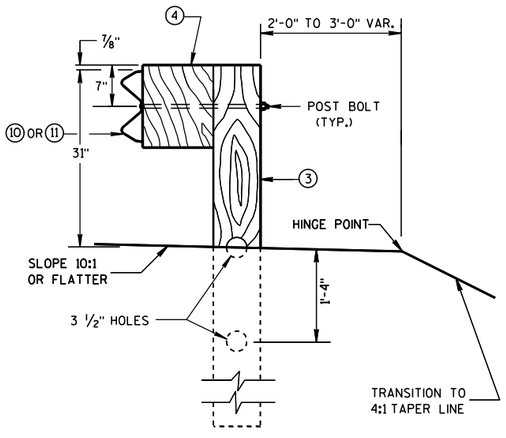

SECTION C-C
TYPICAL AT POST NOS. 3-9

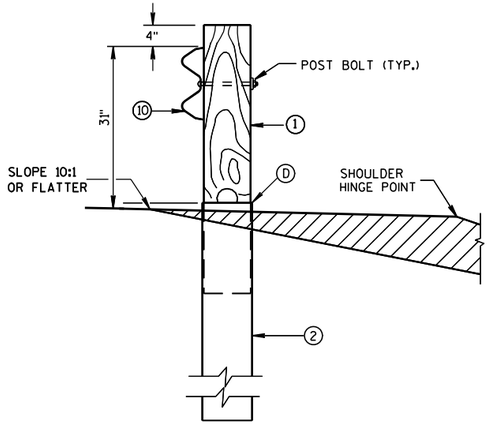

SECTION B-B
TYPICAL AT POST NO. 2*

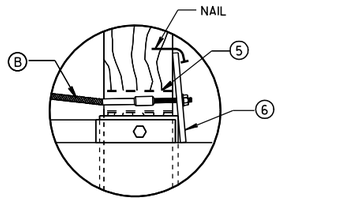

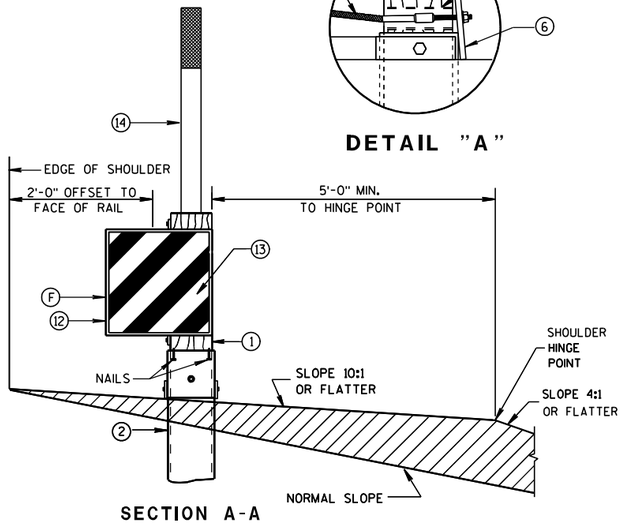

SECTION A-A
TYPICAL AT POST NO. 1*

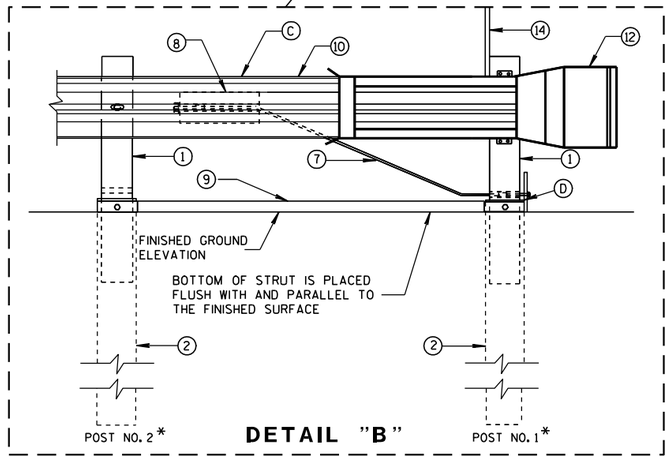

DETAIL "B"

MIDWEST GUARDRAIL SYSTEM
ENERGY ABSORBING TERMINAL (MGS)

STATE OF WISCONSIN
DEPARTMENT OF TRANSPORTATION

6

S.D.D. 14 B 44-1a

6

S.D.D. 14 B 44-1a

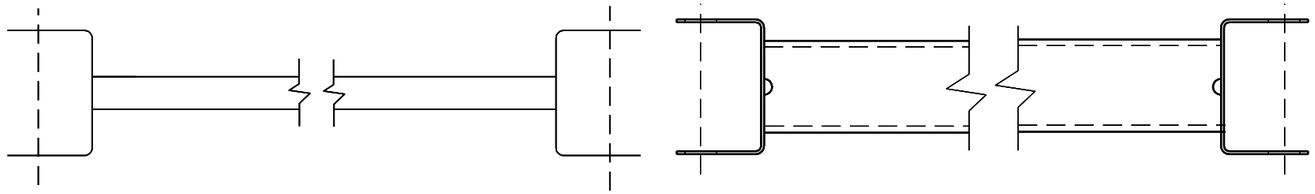

GENERIC GROUND STRUT (9) (H)

BILL OF MATERIALS

PART NO.	DESCRIPTION MATERIALS PROVIDED BY MGS EAT MANUFACTURER. SEE MANUFACTURER'S DETAILS FOR MORE INFORMATION.
(1)	WOOD BREAKAWAY POST
(2)	6" X 8" X 0.188", 6'-0" LONG FOUNDATION TUBE AT POSTS 1 AND 2
(3)	WOOD CRT
(4)	WOOD BLOCKOUT
(5)	PIPE SLEEVE
(6)	BEARING PLATE
(7)	BCT CABLE ASSEMBLY
(8)	ANCHOR CABLE BOX
(9)	GROUND STRUT
(10)	PERFORATED W-BEAM RAIL END PANEL, 12'-6" LONG.
(11)	STANDARD W-BEAM RAIL. MULTIPLE SECTIONS REQUIRED. SECTIONS VARY IN LENGTH.
(12)	END SECTION EAT
(13)	0.040" ALUMINUM SHEET WITH REFLECTIVE SHEETING TYPE H (ONLY THE SHEETING IS SUPPLIED BY THE MANUFACTURER)
(14)	EAT MARKER POST - YELLOW (SEE APPROVED PRODUCTS LIST)

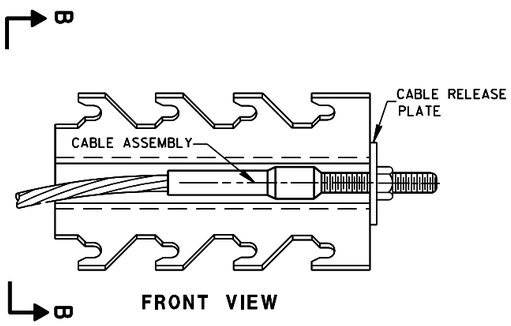

FRONT VIEW

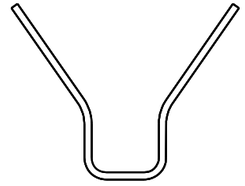

SECTION B-B

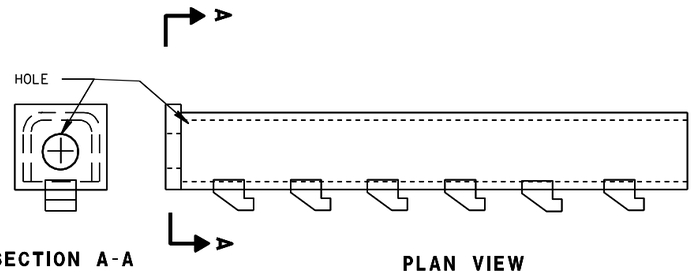

SECTION A-A

PLAN VIEW

GENERIC ANCHOR CABLE BOX (8) (H)

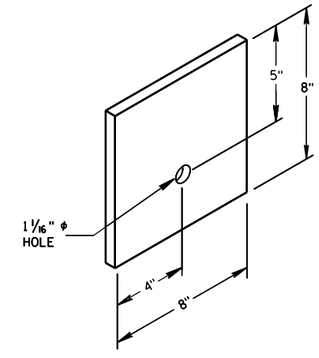

BEARING PLATE (6)

MIDWEST GUARDRAIL SYSTEM
ENERGY ABSORBING TERMINAL
(MGS)

STATE OF WISCONSIN
DEPARTMENT OF TRANSPORTATION

6

S.D.D. 14 B 44-1b

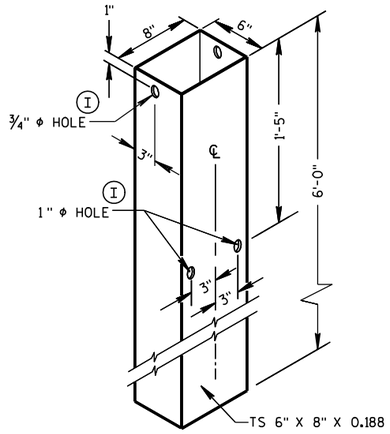

FOUNDATION TUBE (2)

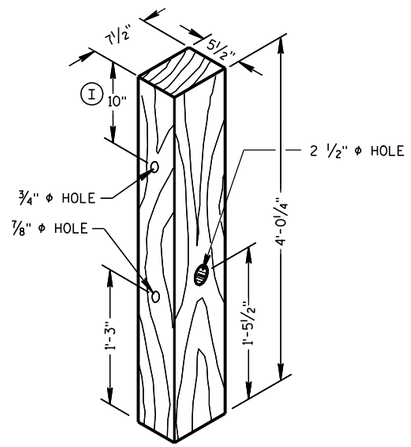

POSTS NUMBER 1 AND 2

WOOD BREAKAWAY POST (1)

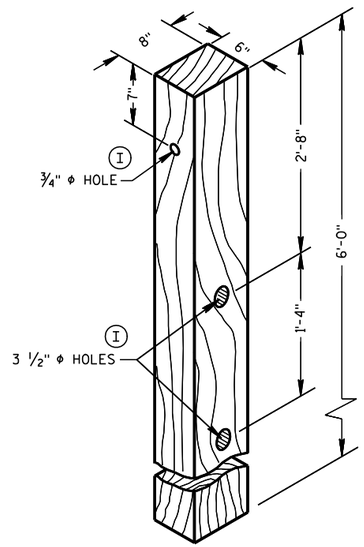

POSTS NUMBER 3-9

WOOD CRT POST (3)

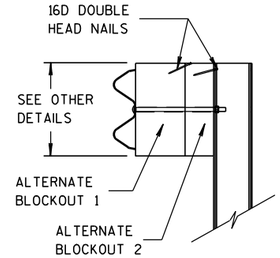

SIDE VIEW

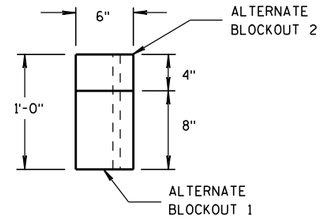

TOP VIEW

ALTERNATE WOOD BLOCKOUT DETAIL

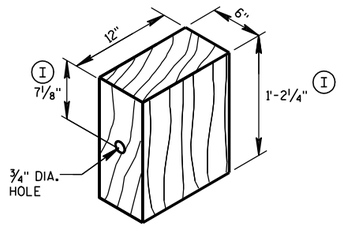

WOOD BLOCKOUT (4)

REQ'D. AT ALL POSTS EXCEPT POST NO'S 1 & 2

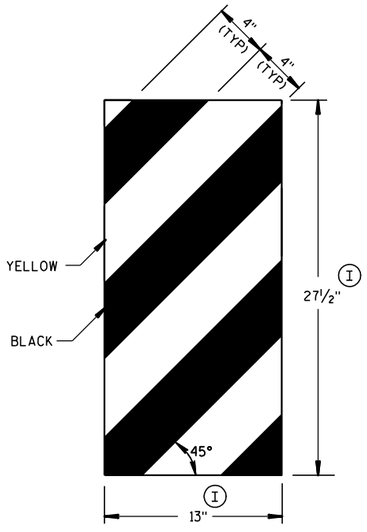

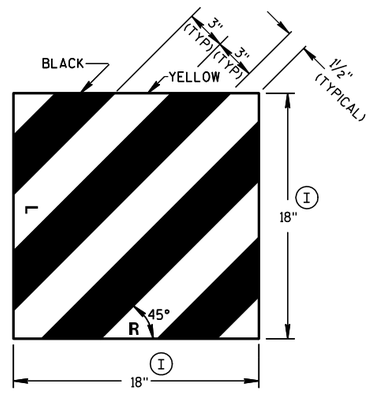

GENERIC REFLECTIVE SHEETING (13) (H)

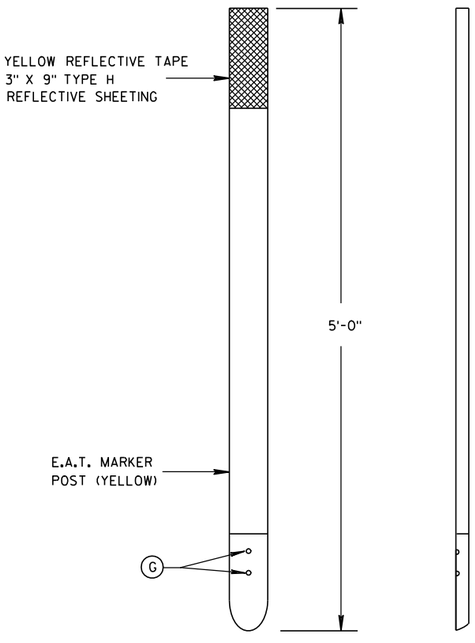

FRONT VIEW

SIDE VIEW

E.A.T. MARKER POST (14)

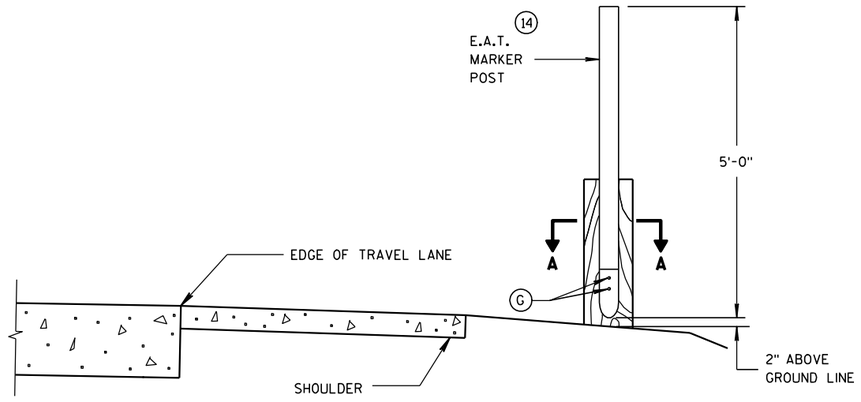

TYPICAL INSTALLATION OF E.A.T. MARKER POST BACKSIDE OF POST NO. 1

(E.A.T. AND RAIL REMOVED FOR CLARITY)

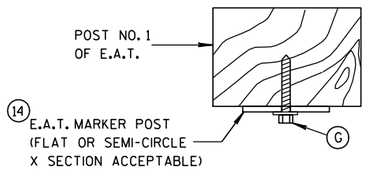

SECTION A-A

MIDWEST GUARDRAIL SYSTEM ENERGY ABSORBING TERMINAL (MGS)

STATE OF WISCONSIN
DEPARTMENT OF TRANSPORTATION

APPROVED
5/23/2011
DATE
/S/ Jerry H. [illegible]
ROADWAY STANDARDS ENGINEER
FHWA

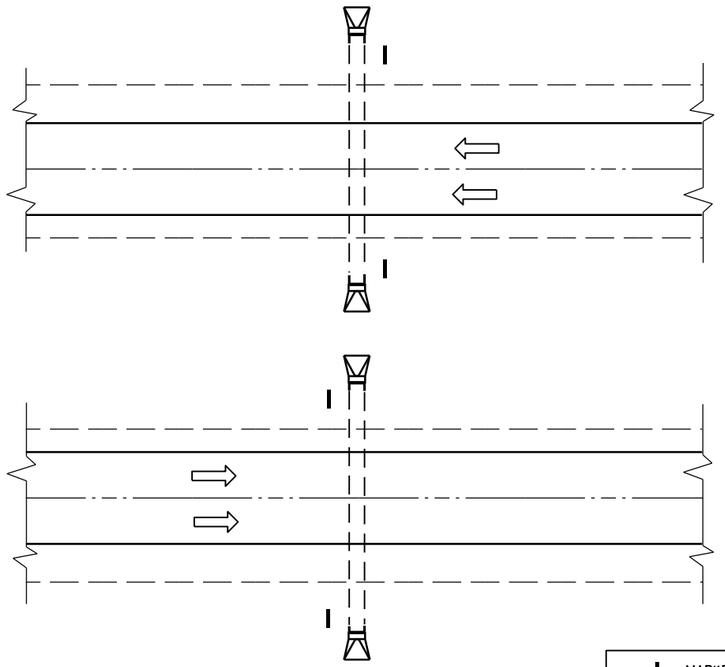

PLAN VIEW

DIVIDED HIGHWAY

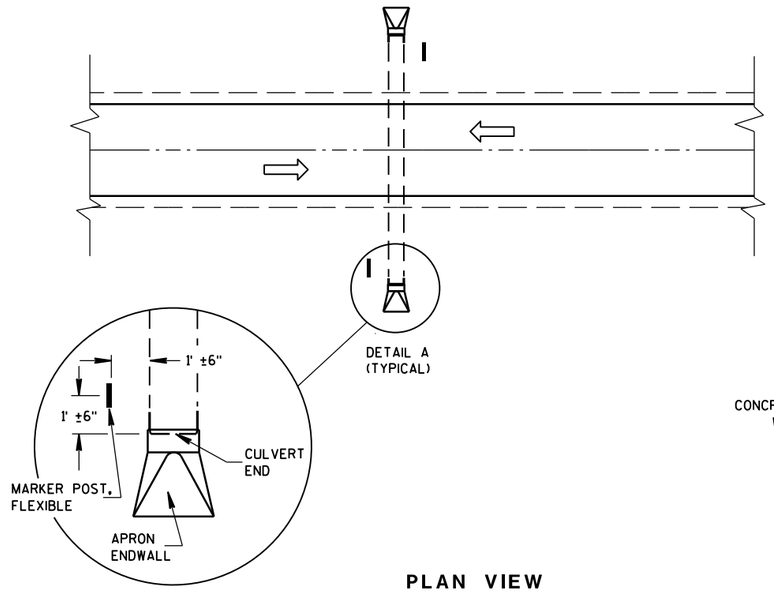

DETAIL A
(TYPICAL)

PLAN VIEW

UNDIVIDED HIGHWAY

MARKER POST, FLEXIBLE

DIRECTION OF TRAFFIC FLOW

GENERAL NOTES

DETAILS OF CONSTRUCTION, MATERIALS AND WORKMANSHIP NOT SHOWN ON THIS DRAWING SHALL CONFORM TO THE PERTINENT REQUIREMENTS OF THE STANDARD SPECIFICATIONS AND THE APPLICABLE SPECIAL PROVISIONS.

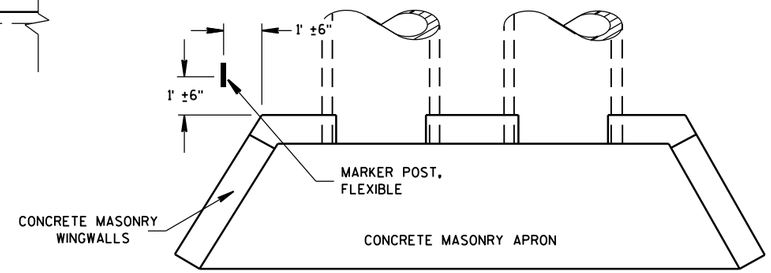

PLAN VIEW

CONCRETE MASONRY ENDWALLS FOR CULVERT PIPE AND PIPE ARCH

FLEXIBLE MARKER POST LOCATION

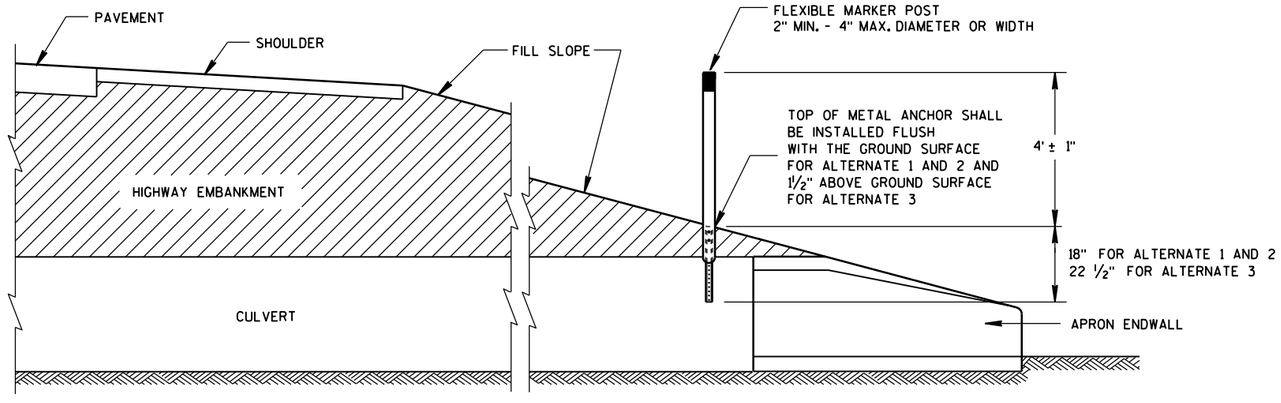

CROSS SECTION

FLEXIBLE MARKER POST

FLEXIBLE MARKER POST FOR CULVERT END

STATE OF WISCONSIN
DEPARTMENT OF TRANSPOI

6

S.D.D. 15 A 3-2a

6

S.D.D. 15 A 3-2a

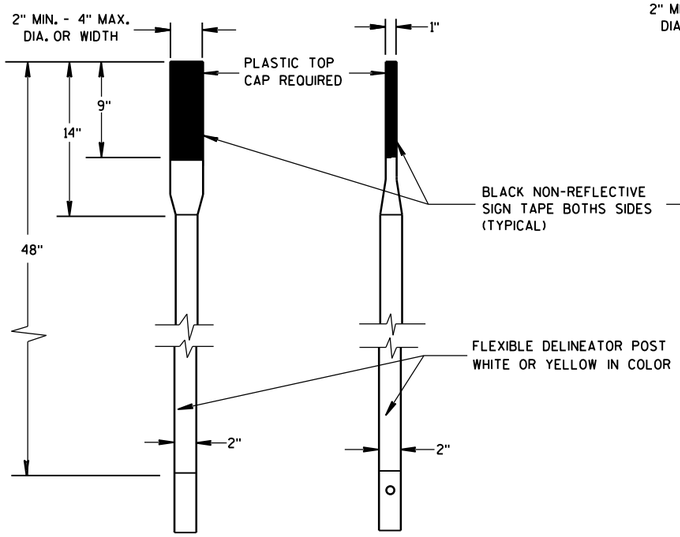

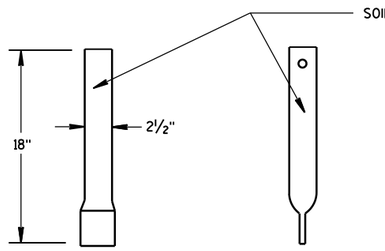

FRONT VIEW SIDE VIEW

ALTERNATE 1

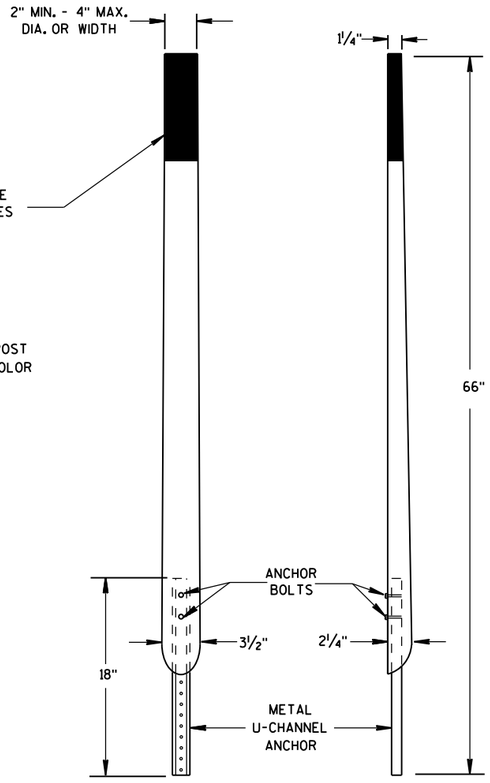

FRONT VIEW SIDE VIEW

ALTERNATE 2

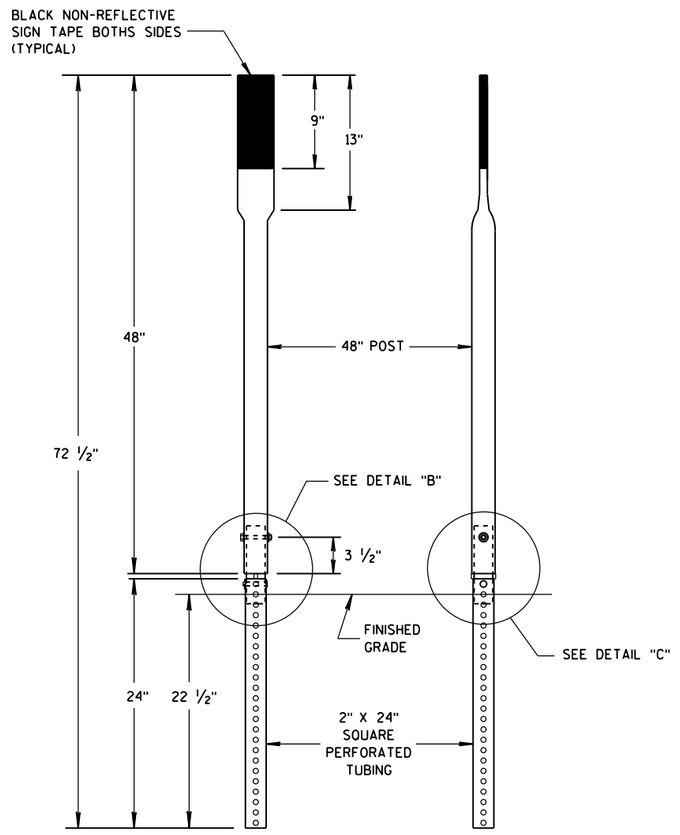

FRONT VIEW SIDE VIEW

ALTERNATE 3

FLEXIBLE MARKER POSTS

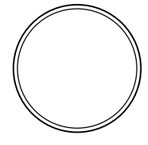

SECTION A-A

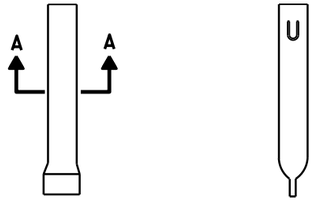

FRONT VIEW SIDE VIEW

ALTERNATE 1

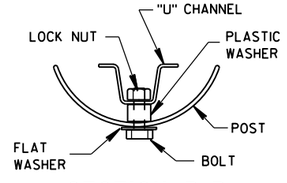

SECTION B-B

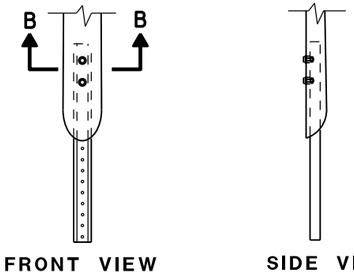

FRONT VIEW SIDE VIEW

ALTERNATE 2

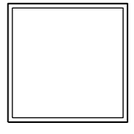

SECTION C-C

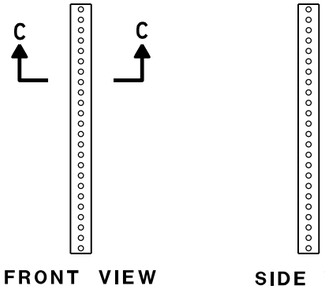

FRONT VIEW SIDE VIEW

ALTERNATE 3

FLEXIBLE MARKER POST ANCHORS

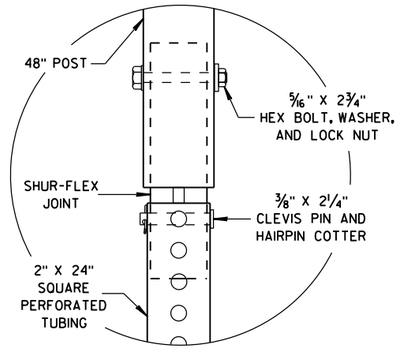

DETAIL B

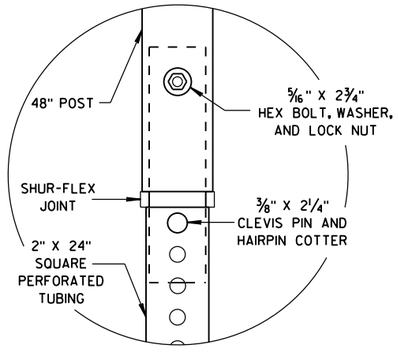

DETAIL C

FLEXIBLE MARKER POST
FOR CULVERT END

STATE OF WISCONSIN
DEPARTMENT OF TRANSPORTATION

APPROVED
10/1/2012
DATE
/S/ Travis Feltes
STATE TRAFFIC ENGINEER
FHWA

6

S.D.D. 15 A 3-2b

6

S.D.D. 15 A 3-2b

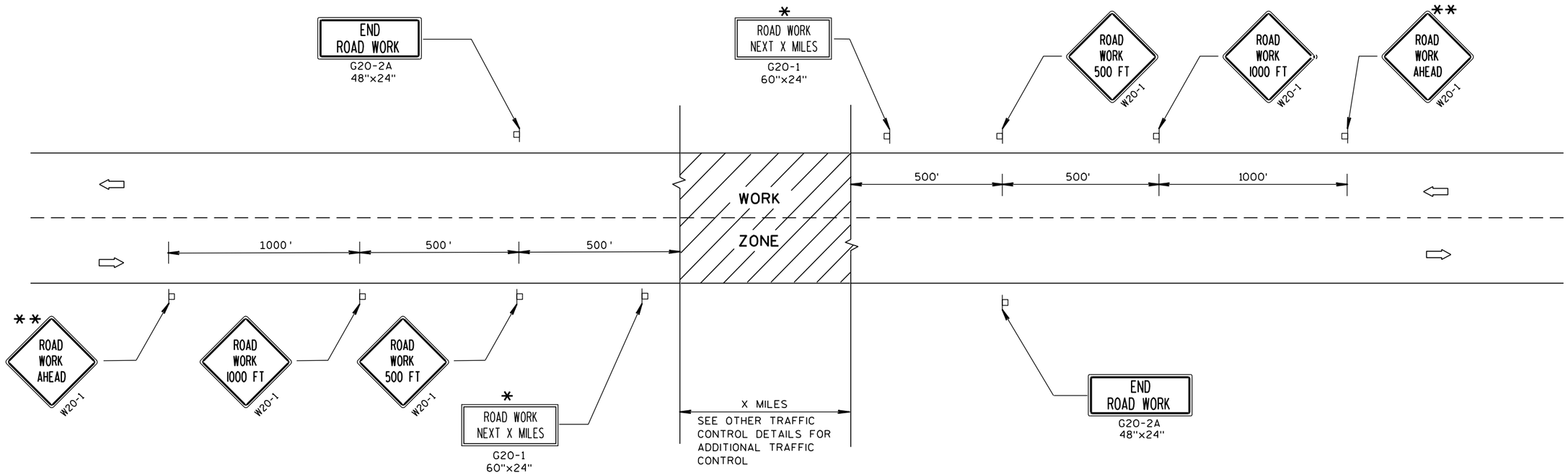

GENERAL NOTES

THE EXACT NUMBER, LOCATION, AND SPACING OF ALL SIGNS AND DEVICES SHALL BE ADJUSTED TO FIT FIELD CONDITIONS.

THE SPACING BETWEEN TRAFFIC CONTROL SIGNS SHOULD BE ADJUSTED TO NOT CONFLICT WITH AND SHOULD PROVIDE A MINIMUM OF 200 FEET (500 FEET DESIRABLE) CLEARANCE TO EXISTING SIGNS THAT WILL REMAIN IN PLACE.

ALL SIGNS ARE 48"x48" UNLESS OTHERWISE NOTED.

SIGNS THAT WILL BE IN PLACE LESS THAN 7 CONTINUOUS DAYS AND NIGHTS MAY BE MOUNTED ON PORTABLE SUPPORTS.

IF A "STOP" SIGN MUST BE REMOVED FOR A WORK OPERATION, A TEMPORARY "STOP" SIGN SHALL BE PLACED PRIOR TO THE SIGN REMOVAL, OR A FLAGGER SHALL BE PROVIDED UNTIL THE SIGN IS RE-ESTABLISHED.

* OMIT G20-1 SIGNS IF LENGTH OF WORK AREA IS 2 MILES OR LESS.

** PLACE ADDITIONAL W20-1 "ROAD WORK AHEAD" SIGN IF WORK AREA WITHIN THE PROJECT IS SEPARATED BY MORE THAN 2 MILES FROM PREVIOUS WORK AREA OR SIGNING.

TYPICAL SIDEROAD APPROACH WARNING SIGN DETAIL

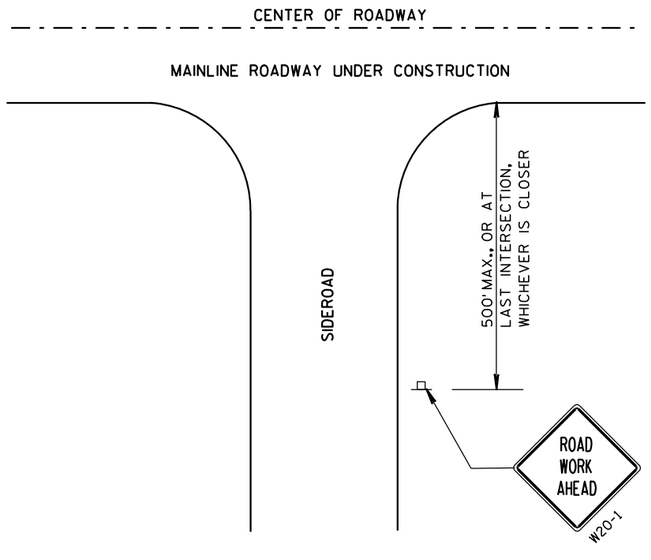

LEGEND

POST MOUNTED SIGN

DIRECTION OF TRAFFIC FLOW

TRAFFIC CONTROL, ADVANCE WARNING SIGNS 45 M.P.H. OR GREATER TWO-WAY UNDIVIDED ROAD OPEN TO TRAFFIC

STATE OF WISCONSIN
DEPARTMENT OF TRANSPORTATION

APPROVED

5/23/00 DATE

/S/ Chester J. [illegible] CHIEF SIGNS AND MARK[illegible]NEER

FHWA

6

S.D.D. 15 C 4-1

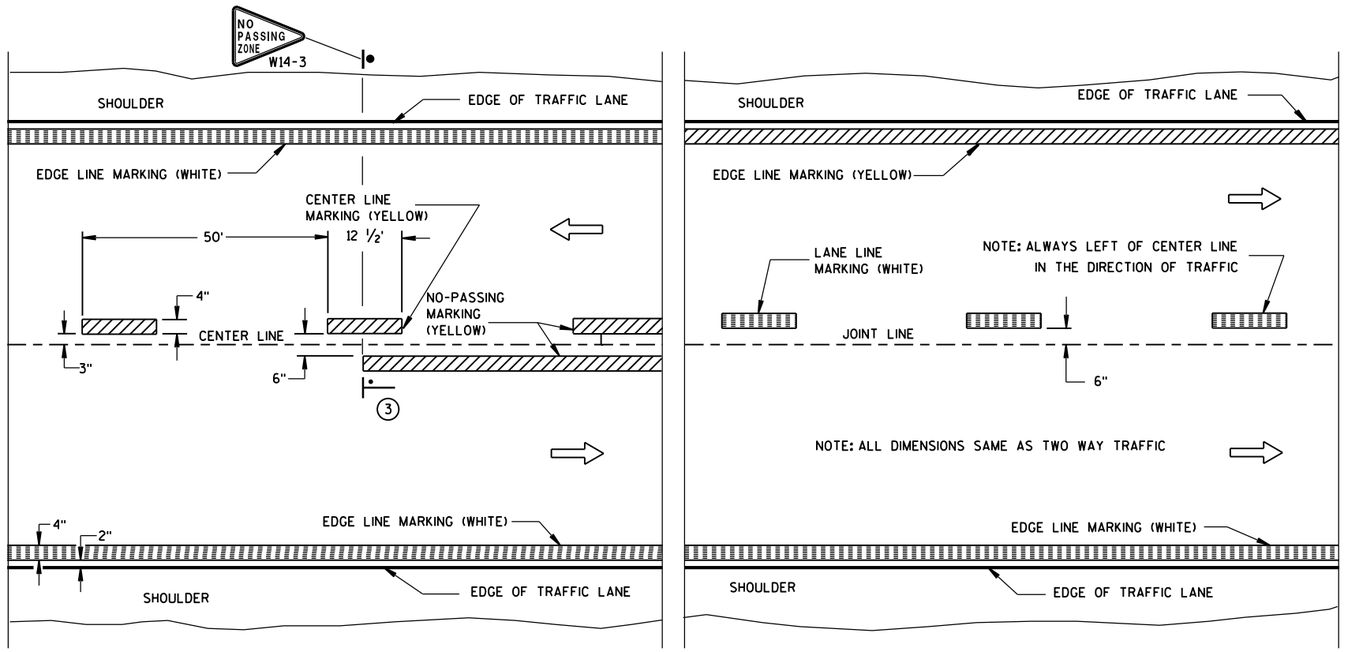

TWO WAY TRAFFIC

ONE WAY TRAFFIC

PERMANENT PAVEMENT MARKING

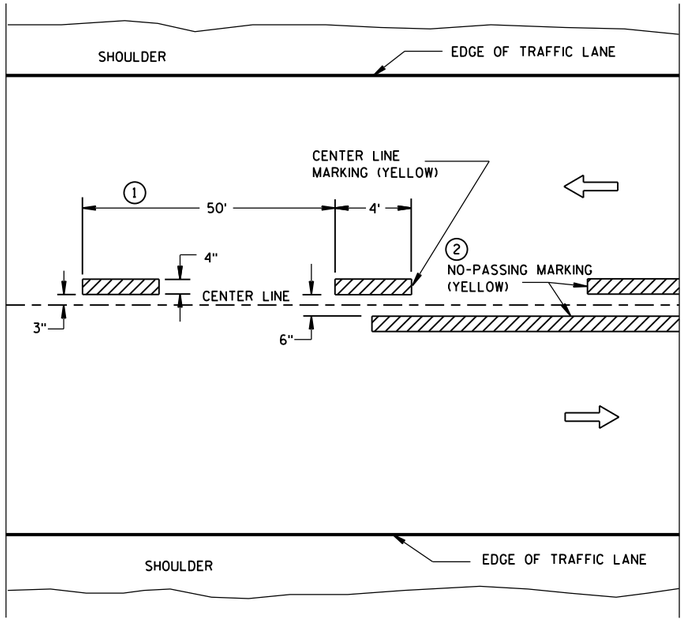

TWO WAY TRAFFIC

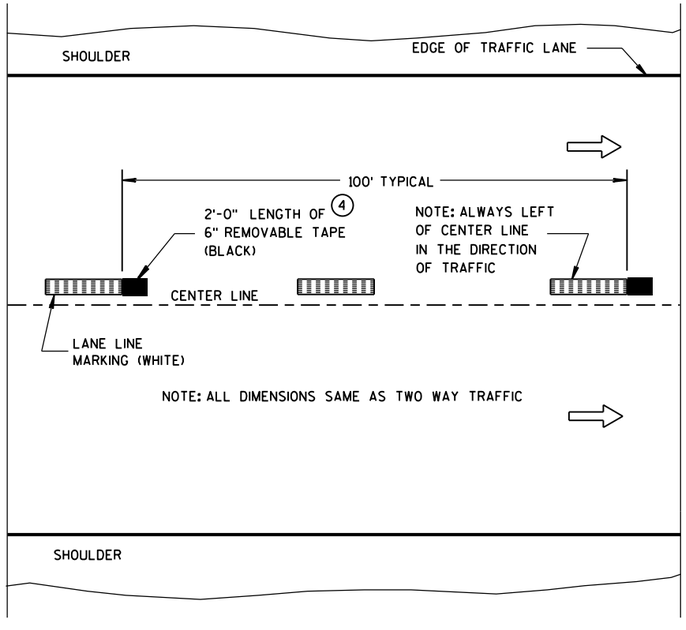

ONE WAY TRAFFIC

TEMPORARY (INTERMEDIATE) PAVEMENT MARKING

(SHOWS CYCLE FOR TEMPORARY CENTER LINE OR TEMPORARY LANE LINE MARKING)

GENERAL NOTES

DETAILS OF CONSTRUCTION NOT SHOWN ON THIS DRAWING SHALL CONFORM TO STANDARD SPECIFICATIONS AND SPECIAL PROVISIONS.

1. HALF CYCLE LENGTHS (25'±) WITH 2' MINIMUM STRIPE LENGTHS SHALL BE PROVIDED ON ROADWAYS (INCLUDING TEMPORARY TRAVELED WAYS) WITH REVERSE CURVATURE, CURVATURE OF OVER 5 DEGREES OR WHEN DIRECTED BY THE ENGINEER TO MARK UNUSUAL ALIGNMENT OF THE TRAVELED WAY.
2. NO PASSING ZONE TEMPORARY PAVEMENT MARKING IS REQUIRED TO BE PLACED, WHERE APPROPRIATE, ALONG WITH CENTERLINE TEMPORARY PAVEMENT MARKING WHEN A SAME DAY PERMANENT PAVEMENT MARKING ITEM IS INCLUDED IN THE CONTRACT.
3. NO PASSING ZONE MARKINGS ARE PLACED ACCORDING TO "T" MARKINGS. IF EXISTING NO PASSING ZONE W14-3 SIGNS ARE BEYOND 50 FEET IN EITHER DIRECTION, THE SIGNS SHALL BE MOVED TO THE "T" MARKINGS.
4. CONCRETE ONLY.

NOTE

ARROW SYMBOL (⇨) SHOWS DIRECTION OF TRAVEL

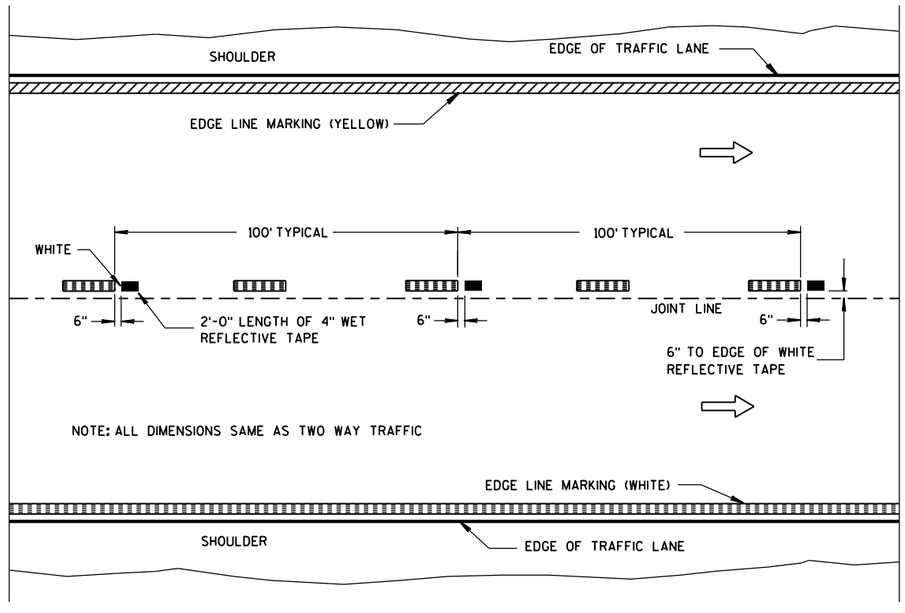

WET REFLECTIVE TAPE SUPPLEMENT TO
SPRAYED OR NON WET REFLECTIVE TAPE LANE LINE

LEGEND

"T" MARKING

POST MOUNTED SIGN

PAVEMENT MARKING (MAINLINE)

STATE OF WISCONSIN
DEPARTMENT OF TRANSPORTATION

APPROVED
10-1-2012 — DATE
/S/ Travis Feltes — STATE TRAFFIC ENGINEER
FHWA

6

S.D.D. 15 C 8-15a

6

S.D.D. 15 C 8-15a

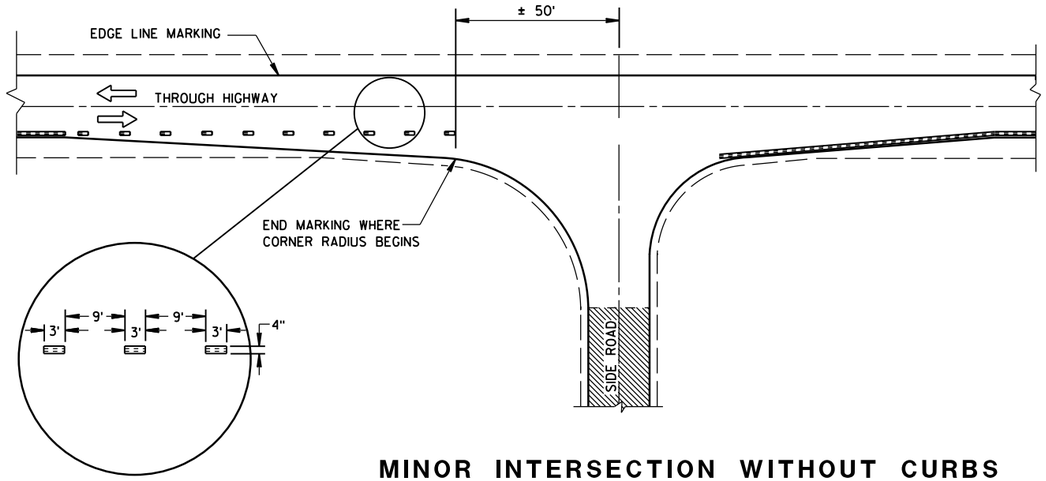

MINOR INTERSECTION WITHOUT CURBS

GENERAL NOTES

EDGE LINES SHALL BE OMITTED THROUGH INTERSECTIONS. EDGE LINES SHALL BE CONTINUED THROUGH DRIVEWAYS.

(1) WHEN DISTANCE "A" IS LESS THAN 250 FEET, OMIT LANE LINE.

(2) WHEN DISTANCE "B" IS LESS THAN 100 FEET, OMIT CHANNELIZING LANE LINE.

(3) ALTERNATIVE MARKING SHALL BE PROVIDED WHEN SPECIFIED IN THE CONTRACT. TYPICAL SITUATIONS WHERE THIS MARKING MAY BE REQUIRED ARE WHERE THE INTERSECTION IS ON A SHARP HORIZONTAL CURVE OR CREST VERTICAL CURVE IN AN UNLIGHTED AREA SUCH THAT THE EDGE LINE MAY BE MISLEADING TO THE MOTORIST OR DISAPPEAR FROM SIGHT.

(4) THE EDGE LINE IN THE TAPER AREAS OF THE BYPASS LANE AND THE BYPASS LANE SHALL BE LOCATED 1-FOOT FROM EDGE OF PAVEMENT TO THE OUTSIDE EDGE OF EDGE LINE.

(5) BARRIER LINE ENDS AT SIDE ROAD PAVEMENT/SURFACE EDGE EXTENSION.

(6) BARRIER LINE STARTS 500 FEET PRIOR TO THE BYPASS TAPER.

(7) IF THE DISTANCE BETWEEN 2 SUCCESSIVE NO-PASSING ZONES IS LESS THAN THE MINIMUM DISTANCE BETWEEN ZONES, CONNECT THE 2 ZONES.

(8) 3' LINE 9' GAP, EXCEPT RETRACE THE EXISTING LINE - GAP PATTERN WHERE EXISTING MARKINGS ARE IN PLACE.

ARROW SYMBOL (⇨) SHOWS DIRECTION OF TRAVEL

(7)

POSTED SPEED (MPH)	MINIMUM DISTANCE BETWEEN ZONES (FEET)
25 - 30	528
35 - 40	528
45 - 50	686
55	792

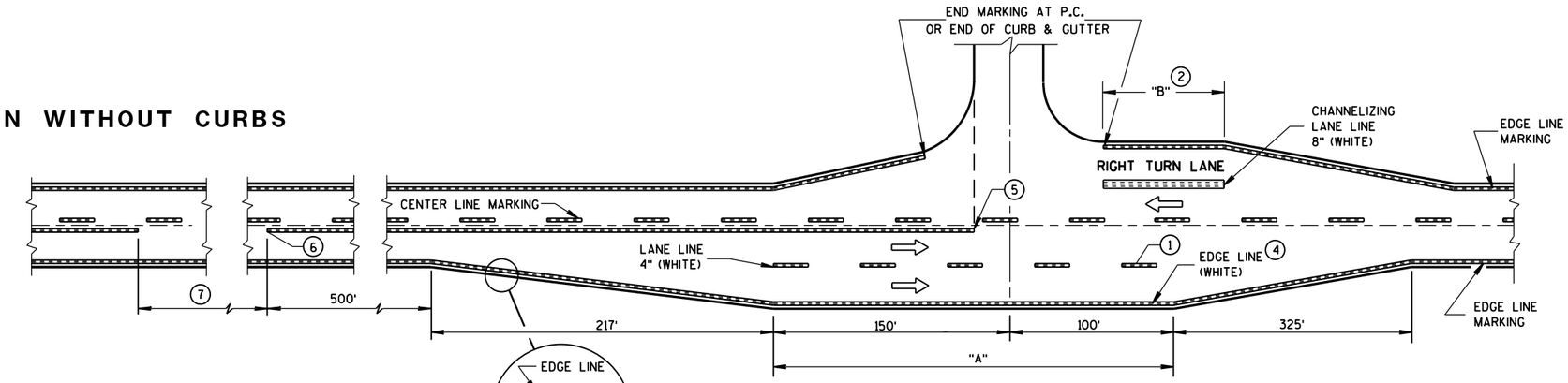

MAJOR INTERSECTIONS

(INTERSECTION WITH FULL RIGHT TURN LANE OR BYPASS LANES)

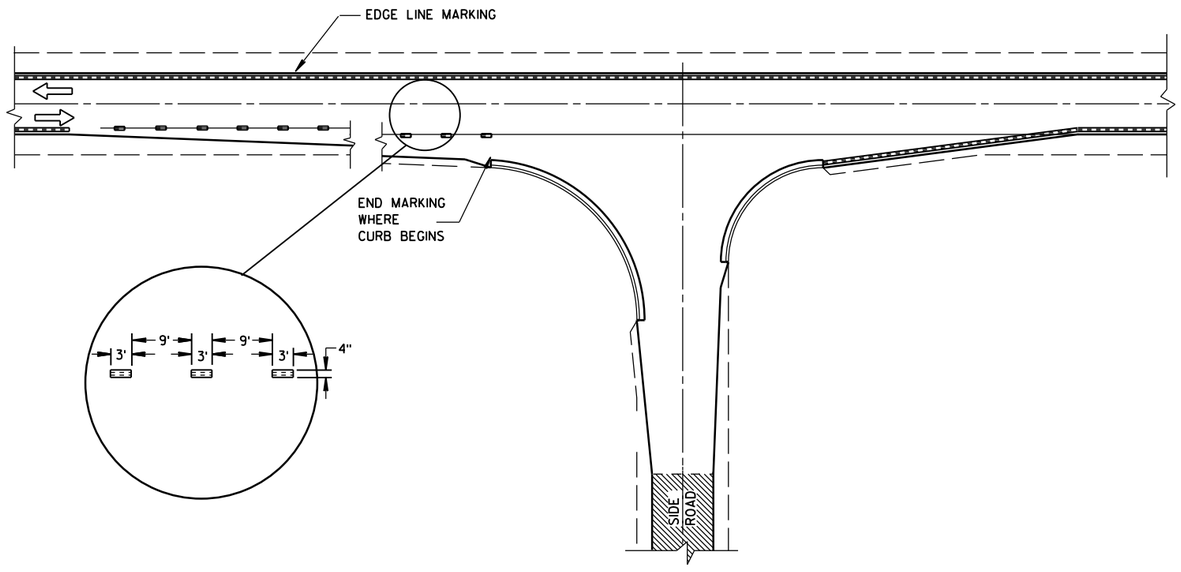

MINOR INTERSECTION WITH CURBS

(TYPICAL MARKING)

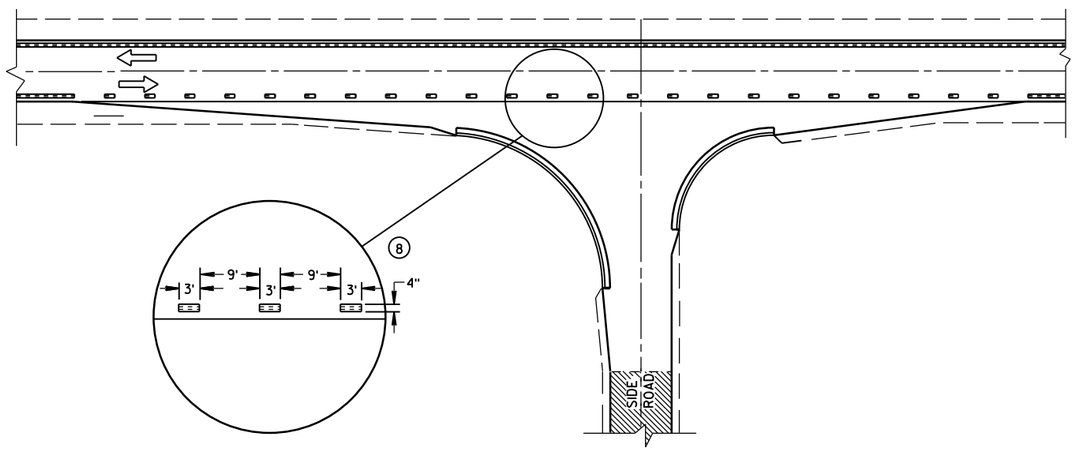

MINOR INTERSECTION WITH CURBS

(3) (FOR SPECIAL CONDITIONS AS SPECIFIED)

PAVEMENT MARKING
(INTERSECTIONS)

STATE OF WISCONSIN
DEPARTMENT OF TRANSPOI

6

S.D.D. 15 C 8-15b

6

S.D.D. 15 C 8-15b

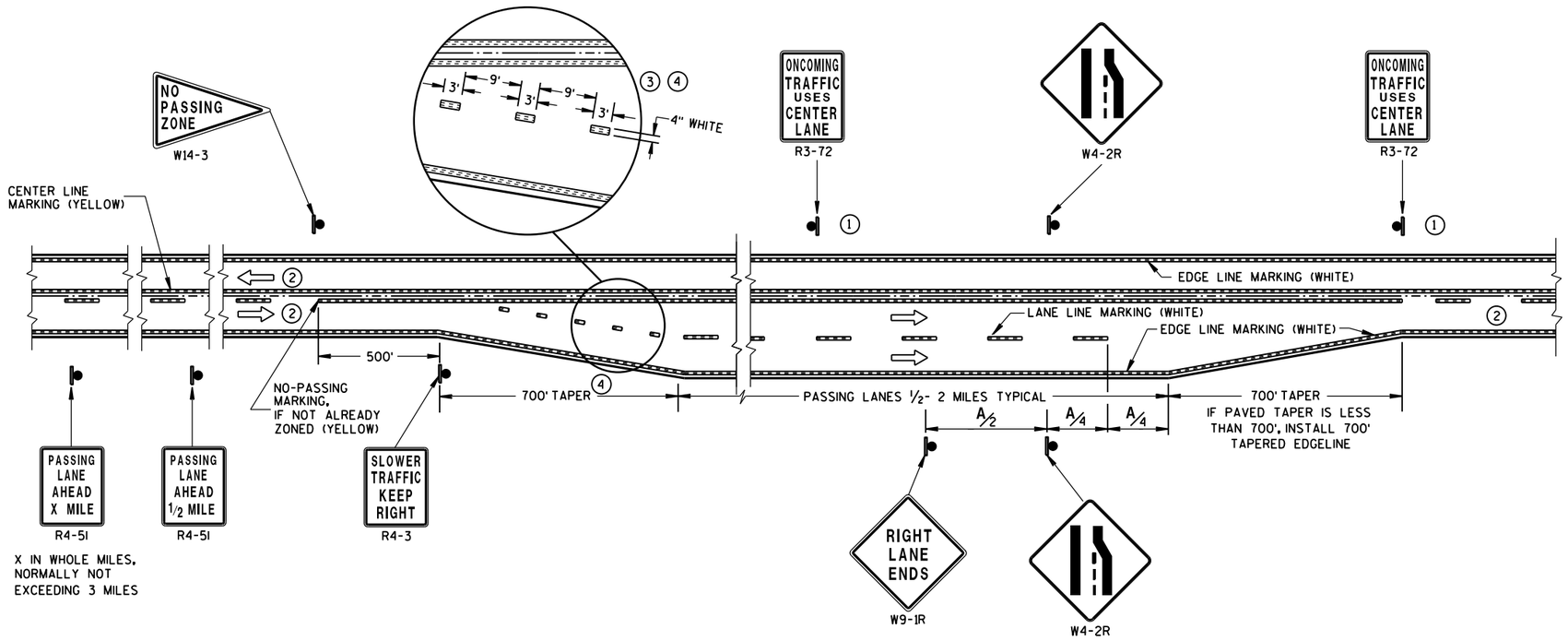

SOLID DOUBLE-YELLOW LINE
(THROUGHOUT ENTIRE PASSING/CLIMBING LANE)

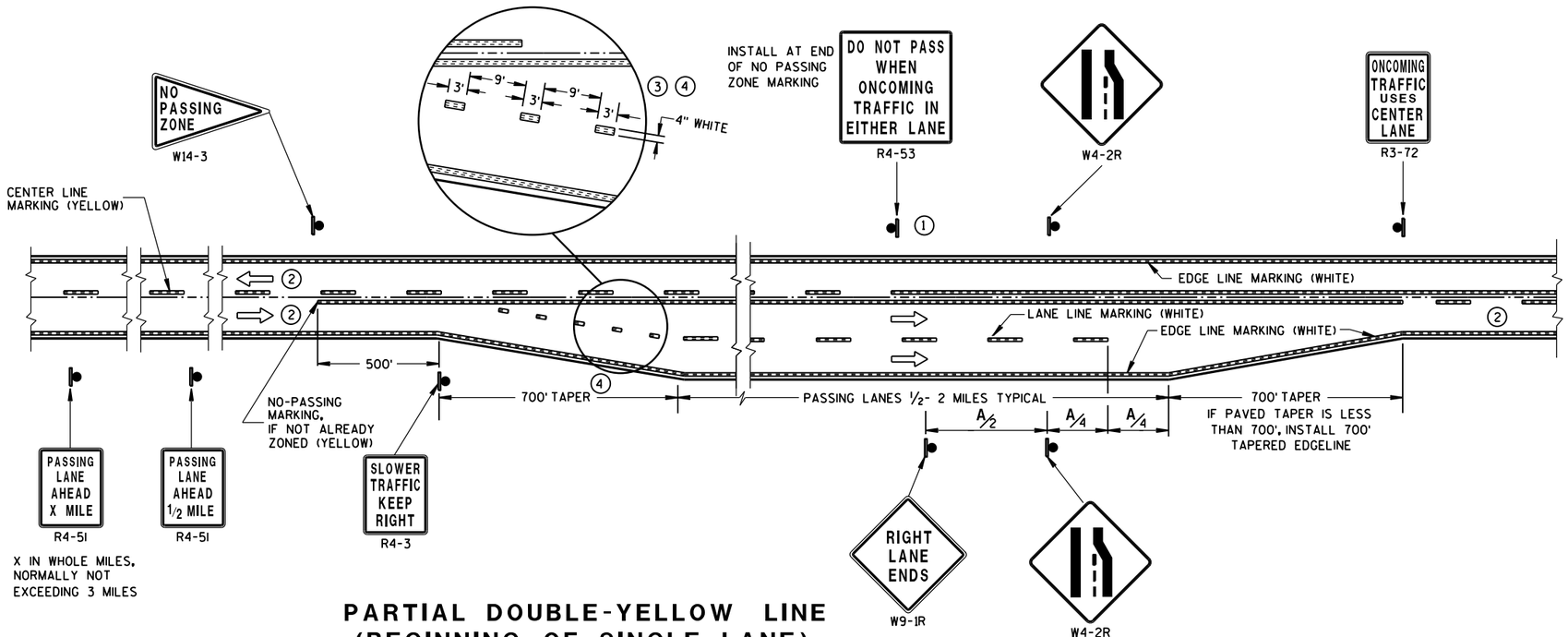

PARTIAL DOUBLE-YELLOW LINE
(BEGINNING OF SINGLE LANE)

GENERAL NOTES

1. SIGN SHALL BE REPEATED AT 1 MILE INCREMENTS OR AT THE DISCRETION OF THE REGIONAL TRAFFIC ENGINEER.
2. THERE MAY BE SOLID YELLOW ON THE CENTERLINE DUE TO SIGHT CONDITIONS.
3. THE TAPER LENGTH OF THE DOTTED LINE PAVEMENT MARKING SHALL BE 700 FEET, 3'LINE 9'GAP, EXCEPT RETRACE THE EXISTING LINE-GAP PATTERN WHERE EXISTING MARKINGS ARE IN PLACE.
4. WHEN THE ENTRANCE TAPER IS LESS THAN 700 FEET OR THE SHOULDER WIDTH IN THE PASSING/CLIMBING LANE IS LESS THAN THE ADJACENT HIGHWAY, DO NOT INSTALL DOTTED LINE PAVEMENT MARKING.

ARROW SYMBOL (⇨) SHOWS DIRECTION OF TRAVEL

DISTANCE TABLE

POSTED OR 85th PERCENTILE SPEED	DISTANCE "A"
45	750
50	850
55	950

PAVEMENT MARKING & SIGNING (CLIMBING LANE & PASSING LANE)

STATE OF WISCONSIN
DEPARTMENT OF TRANSPOI

6

S.D.D. 15 C 8-15c

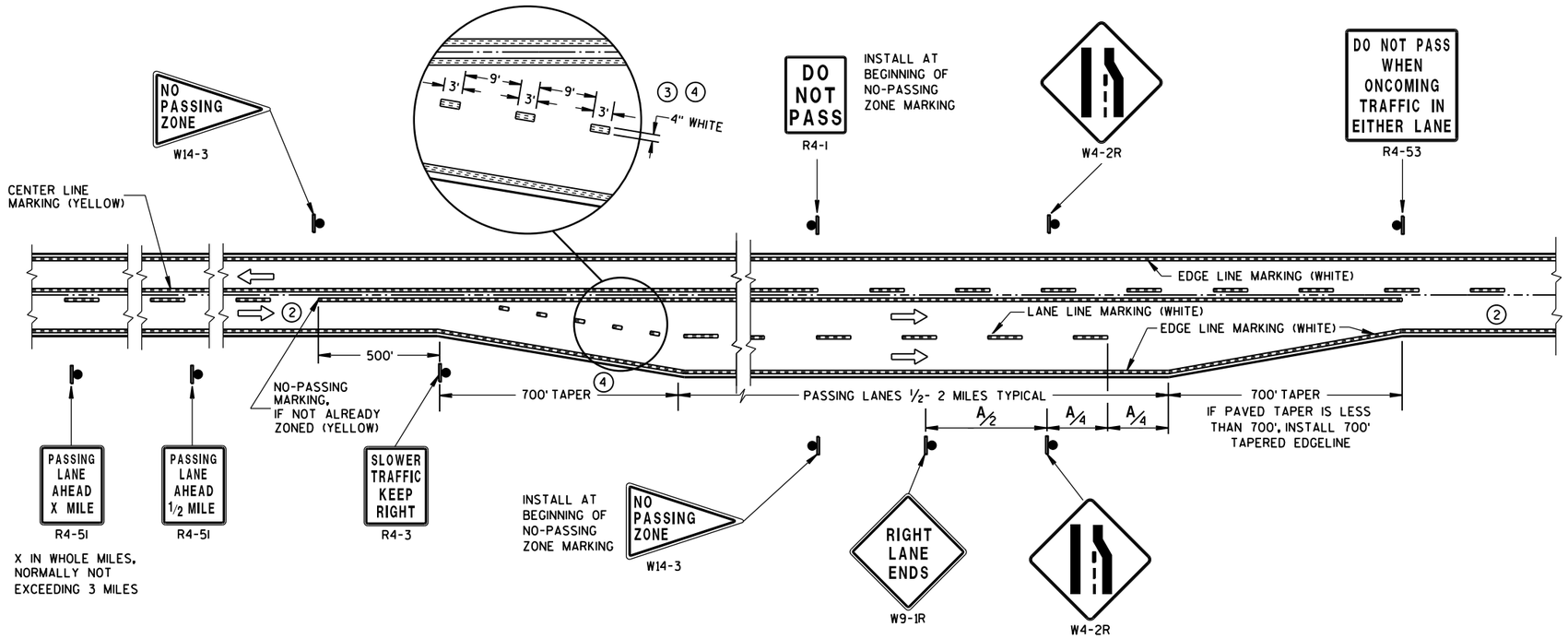

SOLID DOUBLE-YELLOW LINE (END OF SINGLE LANE)

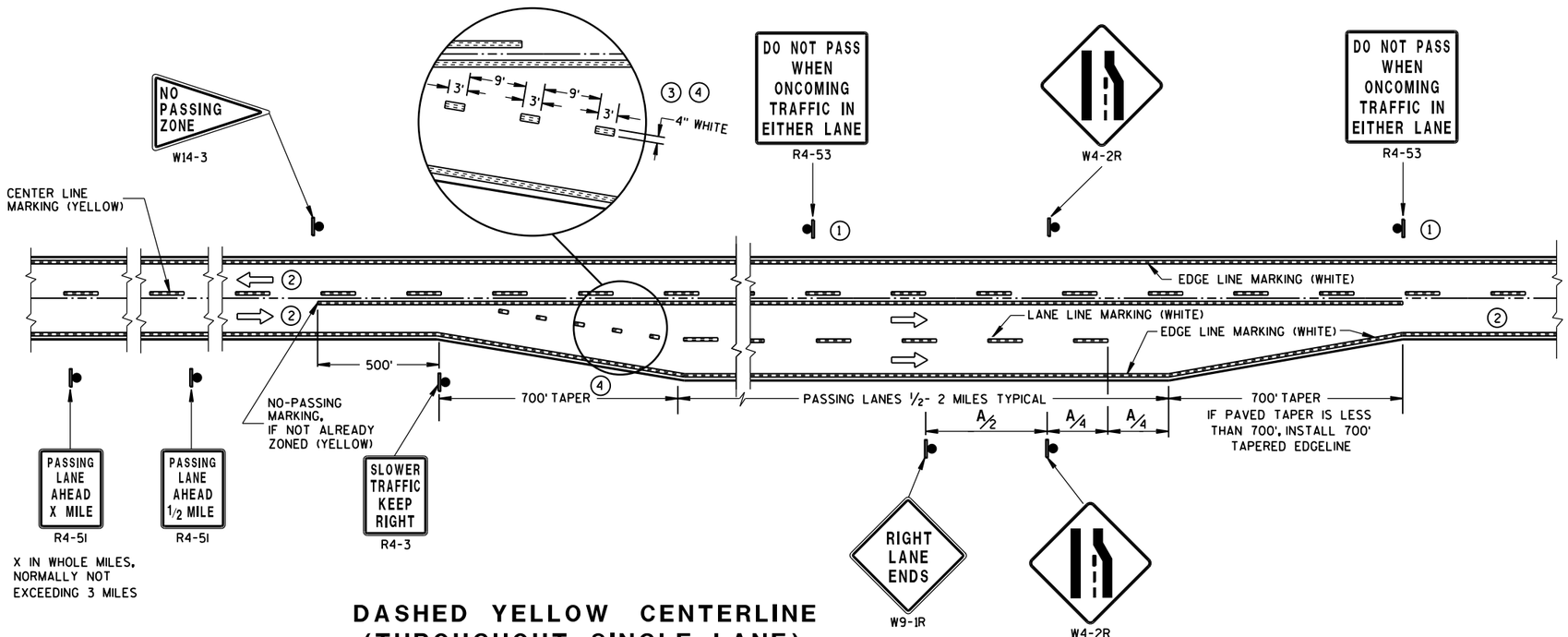

DASHED YELLOW CENTERLINE (THROUGHOUT SINGLE LANE)

GENERAL NOTES

1. SIGN SHALL BE REPEATED AT 1/2 MILE INCREMENTS OR AT THE DISCRETION OF THE REGIONAL TRAFFIC ENGINEER.
2. THERE MAY BE SOLID YELLOW ON THE CENTERLINE DUE TO SIGHT CONDITIONS.
3. THE TAPER LENGTH OF THE DOTTED LINE PAVEMENT MARKING SHALL BE 700 FEET, 3' LINE 9' GAP, EXCEPT RETRACE THE EXISTING LINE-GAP PATTERN WHERE EXISTING MARKINGS ARE IN PLACE.
4. WHEN THE ENTRANCE TAPER IS LESS THAN 700 FEET OR THE SHOULDER WIDTH IN THE PASSING/CLIMBING LANE IS LESS THAN THE ADJACENT HIGHWAY, DO NOT INSTALL DOTTED LINE PAVEMENT MARKING.

ARROW SYMBOL (⇨) SHOWS DIRECTION OF TRAVEL

DISTANCE TABLE

POSTED OR 85th PERCENTILE SPEED	DISTANCE "A"
45	750
50	850
55	950

PAVEMENT MARKING & SIGNING (CLIMBING LANE & PASSING LANE)

STATE OF WISCONSIN
DEPARTMENT OF TRANSPOI

6

S.D.D. 15 C 8-15d

6

S.D.D. 15 C 8-15d

TWO-LANE ROADWAY

SYMBOLS

WORK AREA

FLAGGER, EQUIPPED WITH STOP/SLOW PADDLE FASTENED ON SUPPORT STAFF

SIGN ON PORTABLE OR PERMANENT SUPPORT

W3-4

USE OF THE "BE PREPARED TO STOP" SIGN IS OPTIONAL. WHEN USED, THIS SIGN SHALL BE LOCATED BETWEEN THE W20-7a AND W20-4 SIGNS. A 500' TYPICAL SPACING SHALL BE PROVIDED BETWEEN THE SIGNS.

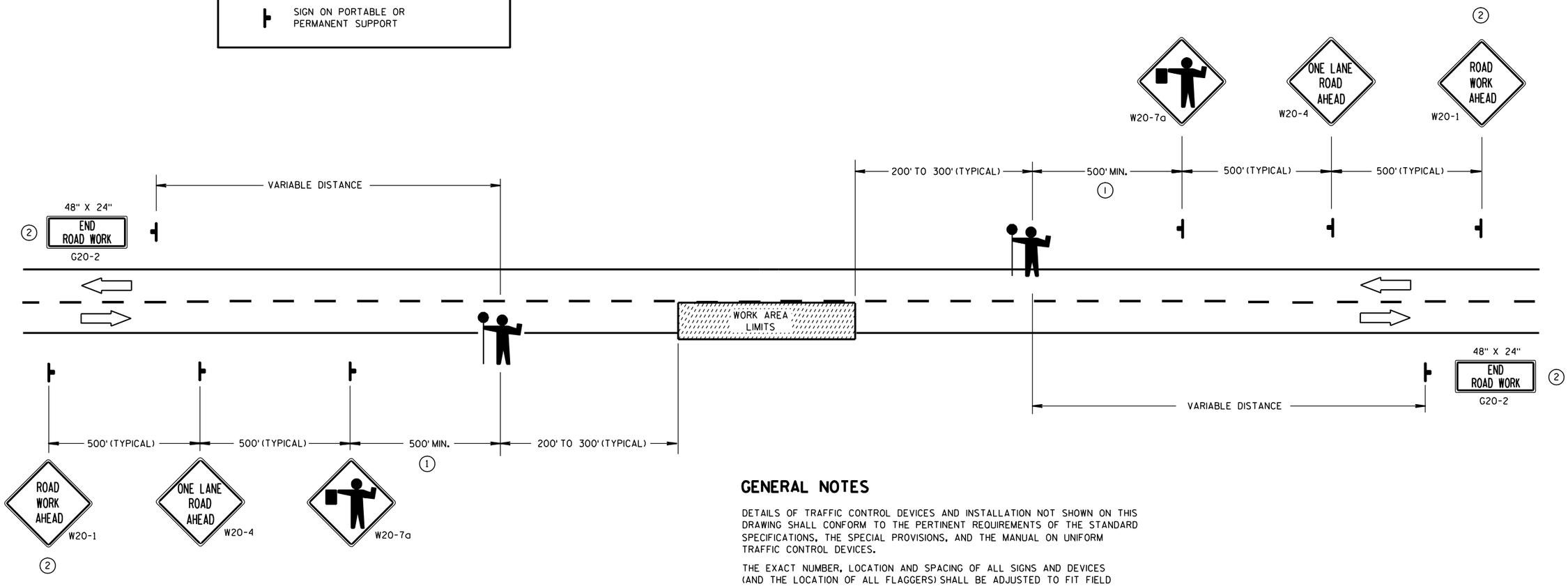

(1) FOR A MOVING WORK OPERATION,
SIGNING FOR BOTH DIRECTIONS SHALL BE REESTABLISHED (AS SIMULTANEOUSLY AS PRACTICAL) AT APPROXIMATELY 3500 FOOT INTERVALS IN THE MOVING WORK OPERATION OR AS APPROVED BY THE ENGINEER.

(2) SIGN NOT REQUIRED IF FLAGGING OPERATION OCCURS WITHIN A SIGNED ROAD WORK ZONE AREA.

GENERAL NOTES

DETAILS OF TRAFFIC CONTROL DEVICES AND INSTALLATION NOT SHOWN ON THIS DRAWING SHALL CONFORM TO THE PERTINENT REQUIREMENTS OF THE STANDARD SPECIFICATIONS, THE SPECIAL PROVISIONS, AND THE MANUAL ON UNIFORM TRAFFIC CONTROL DEVICES.

THE EXACT NUMBER, LOCATION AND SPACING OF ALL SIGNS AND DEVICES (AND THE LOCATION OF ALL FLAGGERS) SHALL BE ADJUSTED TO FIT FIELD CONDITIONS AS APPROVED BY THE ENGINEER.

THE FIRST ADVANCE WARNING SIGN SHOULD TYPICALLY BE LOCATED IN ADVANCE OF THE ANTICIPATED TRAFFIC BACKUP OR QUEUE.

WHEN A SIDE ROAD OR RAMP INTERSECTS THE FACILITY ON WHICH THE WORK IS BEING PERFORMED, ADDITIONAL TRAFFIC CONTROLS SHALL BE PROVIDED AS SPECIFIED IN THE PLANS AND/OR THE SPECIAL PROVISIONS OR AS APPROVED BY THE ENGINEER.

FLAGGERS SHALL BE IN SIGHT OF EACH OTHER OR IN DIRECT COMMUNICATION AT ALL TIMES. THEY SHALL BE EQUIPPED WITH STOP/SLOW PADDLES FASTENED ON SUPPORT STAFFS. WHEN THE FLAGGING OPERATION IS NOT IN EFFECT, THE "FLAGGER AHEAD", THE "ROAD WORK AHEAD" AND THE ONE LANE ROAD AHEAD" SIGNS SHALL BE COVERED OR REMOVED AND THE HIGHWAY RESTORED TO NORMAL OPERATION.

ALL SIGNS ARE 48" X 48" UNLESS OTHERWISE NOTED.

TRAFFIC CONTROL FOR LANE CLOSURE (SUITABLE FOR MOVING OPERATIONS)

STATE OF WISCONSIN
DEPARTMENT OF TRANSPORTATION

APPROVED

9/5/06 — DATE

/S/ Thomas N. Nathaam — STATE TRAFFIC ENGINEER

FHWA

6

S.D.D. 15 C 12-3

6

S.D.D. 15 C 12-3

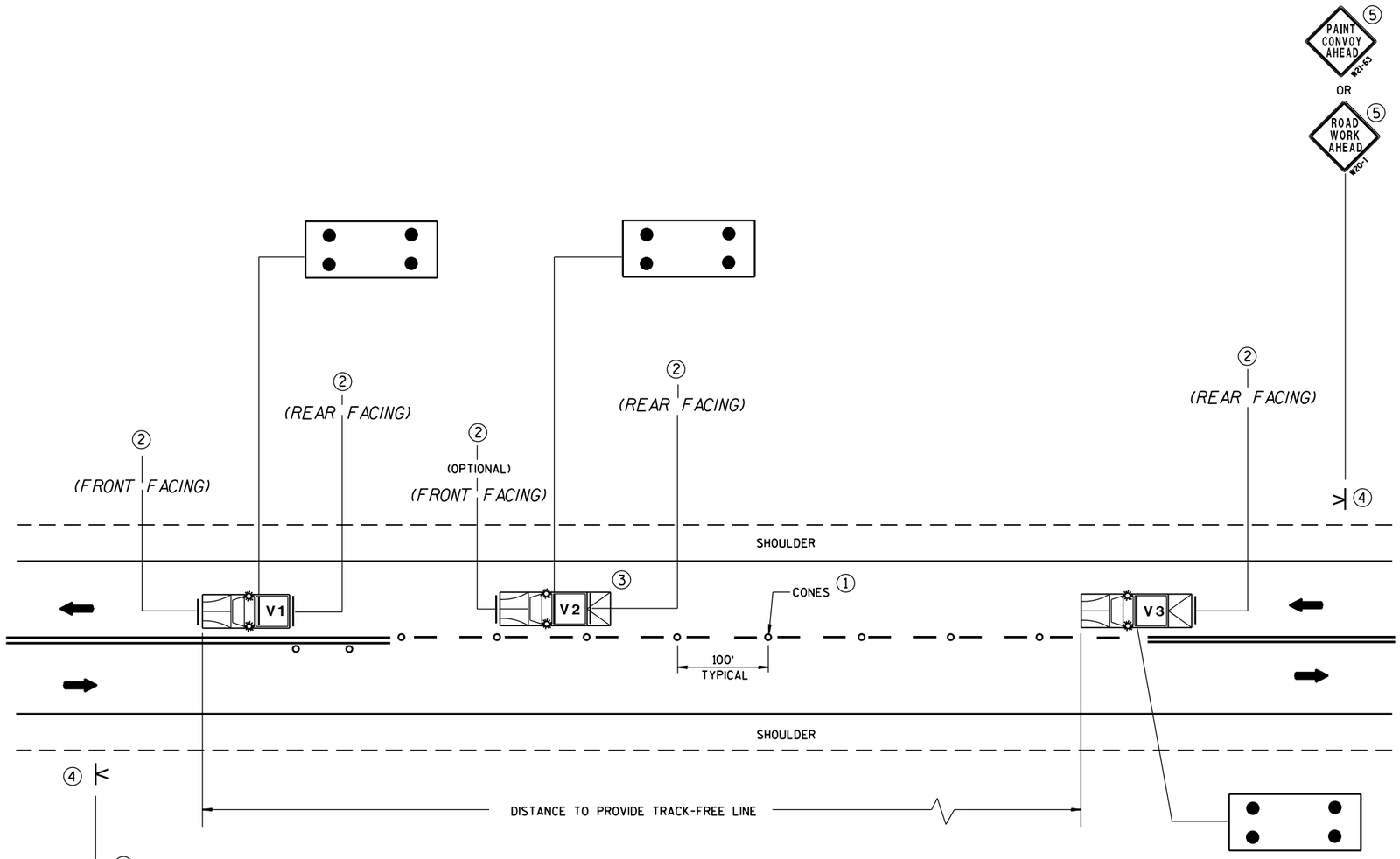

MOVING PAVEMENT MARKING OPERATIONS
TWO-LANE TWO-WAY ROADWAY

GENERAL NOTES

ALL VEHICLES SHALL BE EQUIPPED WITH TWO 360 DEGREE HIGH INTENSITY YELLOW FLASHING LIGHTS OR STROBE LIGHTS AND OPERATED WITH HEADLIGHTS TURNED ON.

VEHICLES SHALL BE EQUIPPED WITH REAR FACING TYPE B OR C FLASHING ARROW PANEL OPERATING IN CAUTION MODE. SIGNS PLACED ON VEHICLES MUST NOT OBSCURE THE ARROW PANEL.

ALL SIGNS ARE 48" X 48" UNLESS OTHERWISE SPECIFIED.

IF SPEED LIMIT IS 40 MPH OR LESS STATIONARY SIGNS MAY BE OMITTED IF CONES ARE USED.

ALTERNATE SIGN MESSAGES, SUCH AS "PAINT CREW AHEAD" OR "ROAD PAINTING AHEAD" MAY BE USED.

DISTANCE BETWEEN VEHICLES MAY VARY ACCORDING TO TERRAIN, SIGHT DISTANCE, PAINT DRYING TIME, AND OTHER FACTORS. WHENEVER ADEQUATE STOPPING SIGHT DISTANCE EXISTS TO THE REAR, SHADOW VEHICLES SHOULD MAINTAIN THE MINIMUM DISTANCE FROM THE WORK VEHICLE AND PROCEED AT THE SAME SPEED AS THE WORK VEHICLE. SHADOW VEHICLES SHOULD SLOW DOWN IN ADVANCE OF VERTICAL OR HORIZONTAL CURVES THAT RESTRICT SIGHT DISTANCE.

THE WORK AND SHADOW VEHICLES SHOULD PULL OVER PERIODICALLY TO ALLOW TRAFFIC TO PASS.

THIS DRAWING SHALL BE USED FOR CENTERLINE OR EDGELINE MARKING.

WHEN NO WORK ACTIVITY IS TAKING PLACE, REMOVE OR TURN THE STATIONARY WARNING SIGNS AWAY FROM TRAFFIC.

(1) CONES MAY BE OMITTED ON PAINTED LINE IF APPROVED BY THE ENGINEER. CONSIDER PAVEMENT MARKING DRY OR CURE TIMES AND TRAFFIC VOLUME.

(2) USE STANDARD SIGN W21-64 WITH APPROPRIATE ARROW.

WET PAINT W21-64 OR WET PAINT W21-64

(3) OPTIONAL TRUCK-MOUNTED ATTENUATOR.

(4) SIGNS SHALL BE REPEATED APPROXIMATELY EVERY THREE MILES.

(5) IF CONSTRUCTION WORK ZONE SIGNS ARE IN PLACE, W20-1 OR W21-63 ARE NOT REQUIRED.

LEGEND

V1	LEAD VEHICLE
V2	SHADOW VEHICLE
V3	TRAIL VEHICLE WITH TMA
TMA	TRUCK-MOUNTED ATTENUATOR
	SIGN ON PORTABLE SUPPORT
	DIRECTION OF TRAVEL
	CONES
	FLASHING ARROW PANEL (CAUTION)

MOVING PAVEMENT MARKING OPERATION
TWO-LANE TWO-WAY ROADWAY

STATE OF WISCONSIN
DEPARTMENT OF TRANSPORTATION

APPROVED
12/6/2011 DATE
/S/ Thomas N. Notbohm STATE TRAFFIC ENGINEER
FHWA

6

S.D.D. 15 C 19-1a

GENERAL NOTE

APPLIES TO ISLANDS AT LEFT TURNS AT ONE WAY ROADWAYS AS WELL.

SEE MISCELLANEOUS QUANTITIES FOR SIGN SIZE.

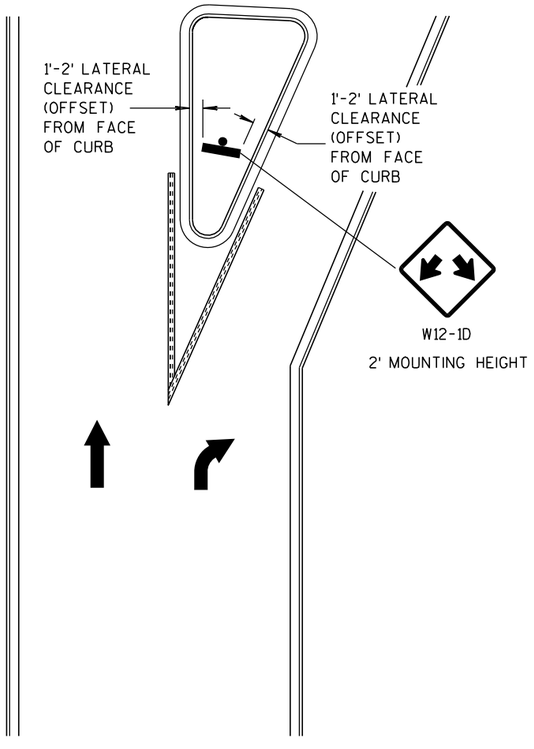

LARGE RIGHT TURN ISLAND

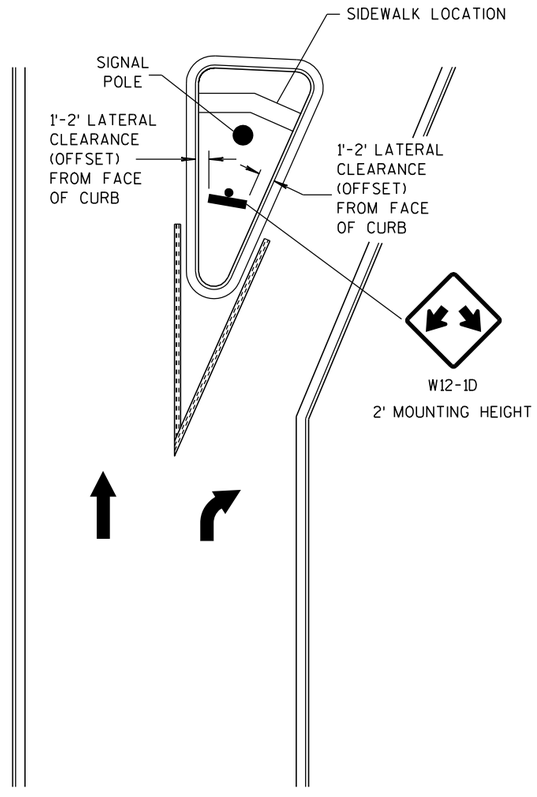

LARGE RIGHT TURN ISLAND
WITH SIGNAL POLE

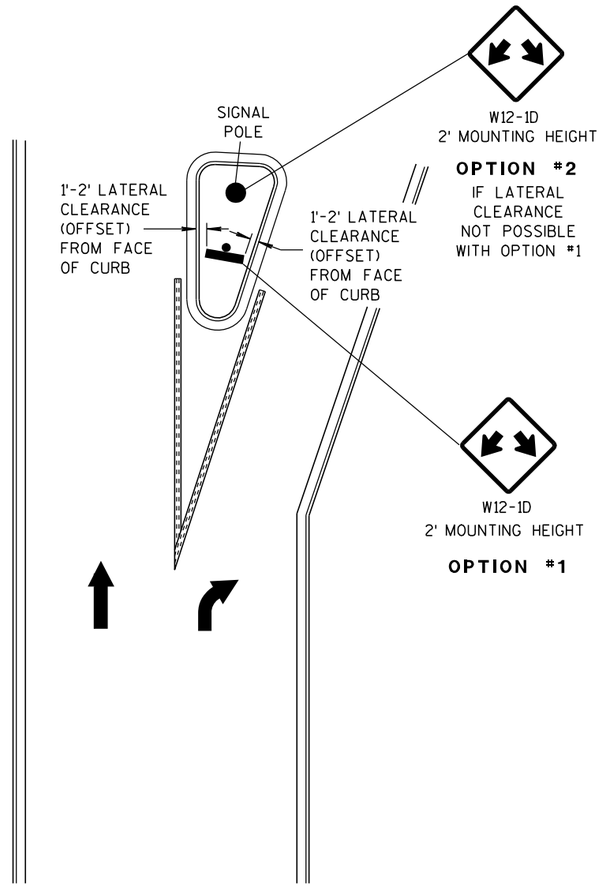

SMALL RIGHT TURN ISLAND

DOUBLE ARROW WARNING SIGN PLACEMENT

DOUBLE ARROW WARNING SIGN PLACEMENT	
STATE OF WISCONSIN DEPARTMENT OF TRANSPORTATION	
APPROVED	
10-22-08 DATE	/S/ Thomas N. Nothdurft STATE TRAFFIC ENGINEER
FHWA	IGN

6

S.D.D. 15 C 27-1

6

S.D.D. 15 C 27-1

GENERAL NOTES

THE EXACT NUMBER, LOCATION AND SPACING OF ALL SIGNS AND DEVICES SHALL BE ADJUSTED TO FIT FIELD CONDITIONS AS APPROVED BY THE ENGINEER.

ALL SIGNS ARE 48" X 48" UNLESS OTHERWISE NOTED. IF NECESSARY DUE TO SPACE CONSTRAINTS IN URBAN AREAS, 36" X 36" SIGNS MAY BE USED IF APPROVED BY DISTRICT TRAFFIC UNIT.

"WO" SIGNS ARE THE SAME AS "W" SIGNS EXCEPT THE BACKGROUND IS ORANGE.

SIGNS THAT WILL BE IN PLACE LESS THAN 7 CONTINUOUS DAYS AND NIGHTS MAY BE MOUNTED ON PORTABLE SUPPORTS.

ANY SIGNS TEMPORARY OR EXISTING, WHICH CONFLICT WITH TRAFFIC CONTROL "IN USE" SHALL BE REMOVED OR COVERED AS NEEDED AND AS APPROVED BY THE ENGINEER.

W20-1 AND G20-2A SIGNS ARE NOT REQUIRED IF THE WORK AREA IS WITHIN A LARGER WORK ZONE WHERE THESE SIGNS ARE ALREADY PRESENT. G20-2A SIGNS MAY ALSO BE OMITTED IF DURATION OF WORK IS LESS THAN 7 CONTINUOUS DAYS AND NIGHTS.

CHANNELIZING DEVICES PLACED ADJACENT TO THE WORK AREA SHALL BE PULLED BACK FROM THE TRAVEL LANE WHEN WORK IS NOT IN PROGRESS.

TABLE A

S \ W	SHOULDER TAPER LENGTH (FEET) 4	6	8	10	BUFFER SPACE (FEET)
30	20	30	40	50	85
35	30	45	55	70	120
40	40	55	75	90	170
45	60	90	120	150	220
50	70	100	135	170	280
55	75	110	150	185	335

W = SHOULDER WIDTH (FEET)
S = NON-CONSTRUCTION SPEED LIMIT (MPH)

SHOULDER TAPER LENGTH
$= \frac{WS}{3}$ AT 45 MPH OR GREATER
$= \frac{WS^2}{180}$ AT 40 MPH OR LESS

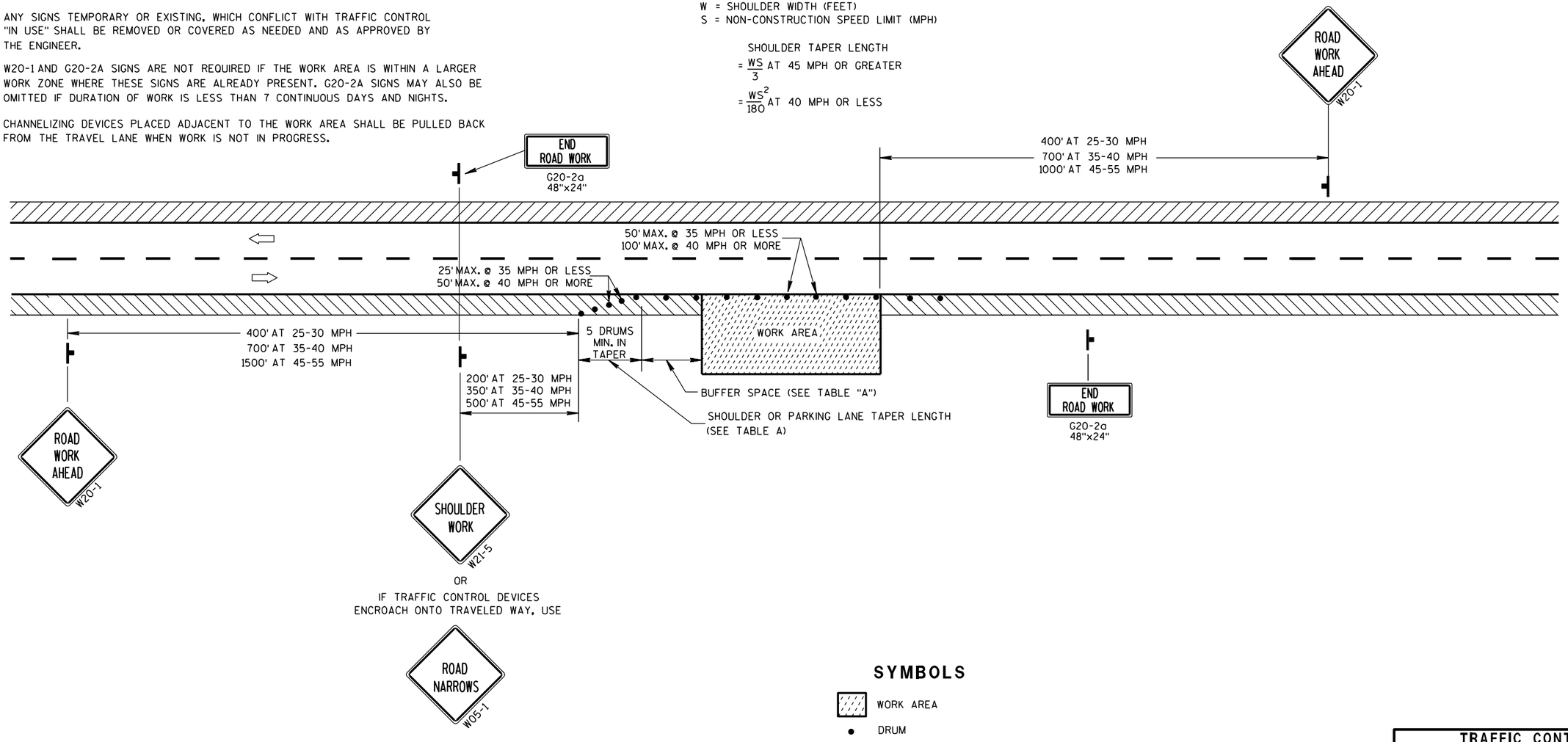

SYMBOLS

- WORK AREA
- DRUM
- POST MOUNTED SIGN
- DIRECTION OF TRAFFIC FLOW

TRAFFIC CONTROL, WORK ON SHOULDER OR PARKING LANE, UNDIVIDED ROADWAY

STATE OF WISCONSIN
DEPARTMENT OF TRANSPORTATION

APPROVED
5/23/00 DATE
/S/ Chester J. [illegible]
CHIEF SIGNS AND MARK[illegible] NEER
FHWA

6
S.D.D. 15 D 28-1

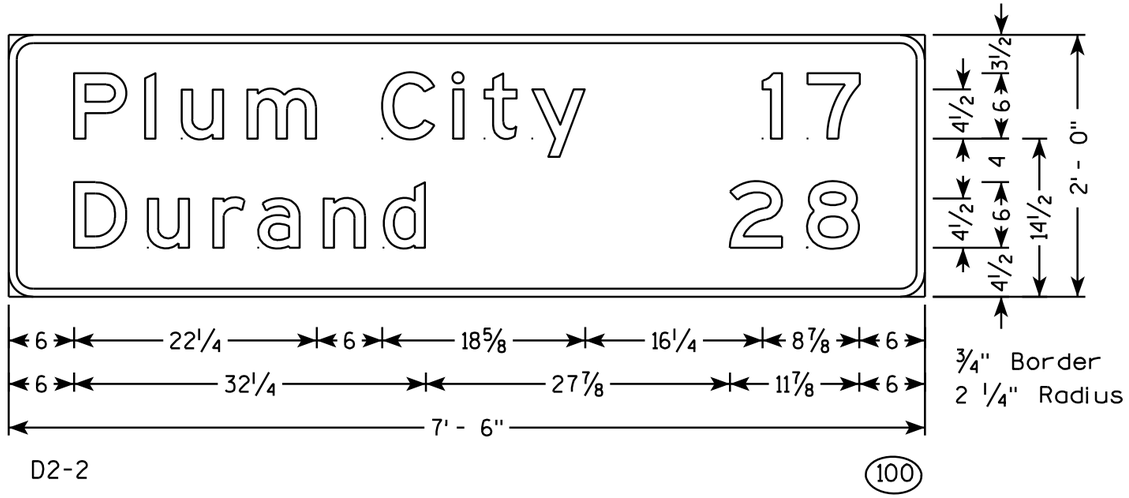

D2-2

100

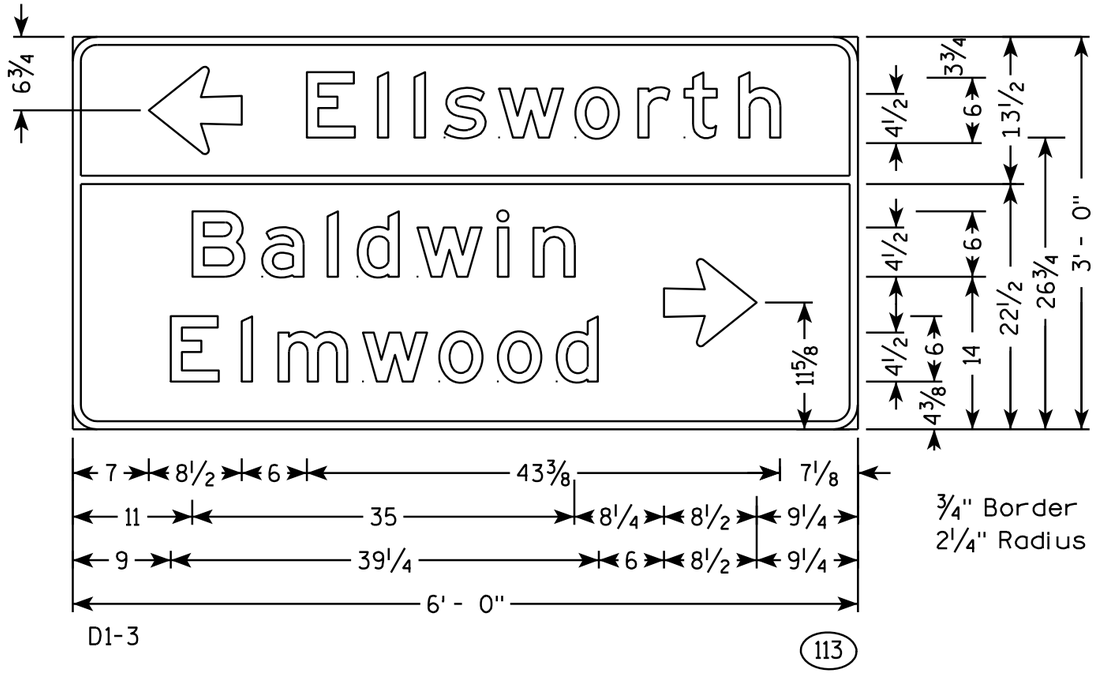

D1-3

113

NOTES

1. All Signs Type II - Type H Reflective - reference WIS DOT Standard Specification for HIGHWAY and STRUCTURE CONSTRUCTION latest edition.
2. Color:
   Background - GREEN
   Message - WHITE
3. Message Series - E

7

7

PROJECT NO: 1530-07-62	HWY: USH 10	COUNTY: PIERCE	PERMANENT SIGNING	SHEET NO: 164	E

TYPICAL ASSEMBLIES

J1-1

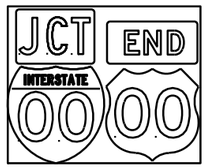

J1-2

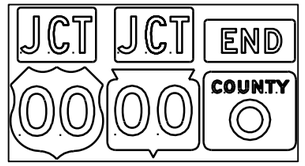

J1-3

J2-1

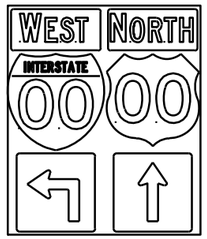

J2-2

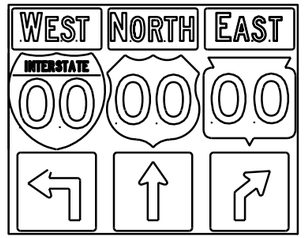

J2-3

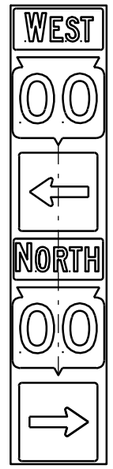

JV

(Typical Vertical J-Assembly
See Note 10 and 11)

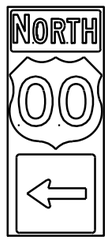

J3-1

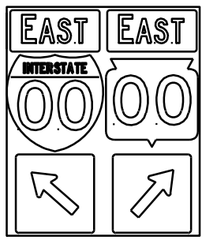

J3-2

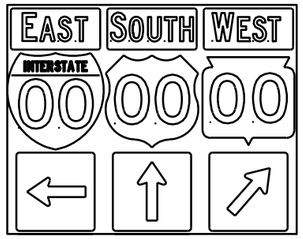

J3-3

J4-1

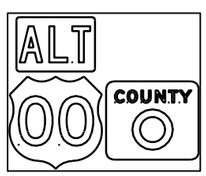

J4-2

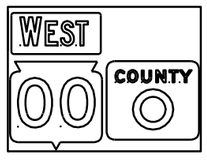

J4-2

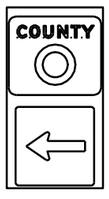

J13-1

J12-1

J32-1

J33-1

J23-1

J22-1

blue background
with interstate

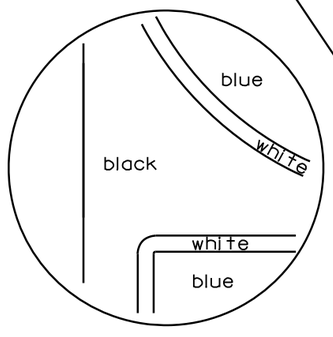

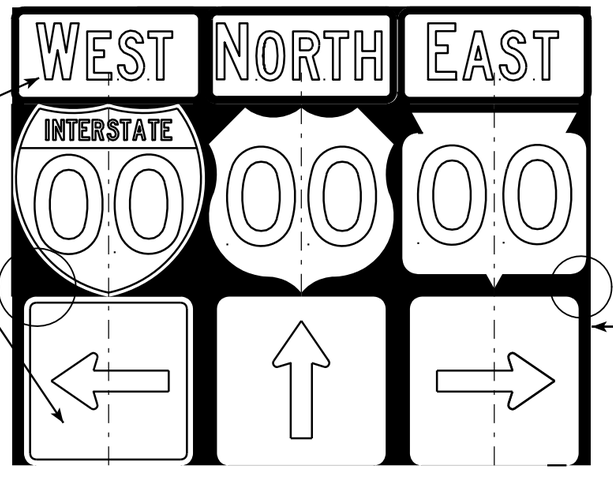

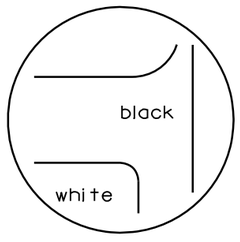

black background

NOTES

1. Signs are Type II - Type H Reflective - reference WIS DOT Standard Specification for HIGHWAY and STRUCTURE CONSTRUCTION latest edition.
2. Color:
   Background - Black Non-reflective
   Message - see Note 5
3. Message Series - See Note 5
4. Corners shall be square or rounded if base material is plywood. If base material is metal the corners shall be rounded.
5. The colors and message spacing on each marker shall be according to the applicable route marker panel specifications.
6. Certain marker heads require the component pieces to be the same color. As an example, all the components used with an M1-1 interstate marker shall be blue.
7. Single panel j-assemblies shall only be used with route marker shields that are same size. If the route marker shields are different size use multiple piece component.
8. Route assemblies that have 24 inch route shields and have dimensions greater than 48 inches (both vertical and horizontal) shall have one horizontal splice between the arrows and route shields. Vertical splices shall not be used on route assemblies with a horizontal dimension of 144 inches or less. The contractor shall not use more than one vertical joint per sign and the joint shall be between route shields.
9. Route assemblies that have 36 inch shields and have dimensions greater than 48 inchs (both vertical and horizontal) shall have two horizontal splices. One horizontal splice shall be between the cardinal direction and route shields and the other horizontal splice shall be between the arrows and route shields. Vertical splices shall not be used on route assemblies with a horizontal dimension of 144 or less. The contractor shall not use more than one vertical joint per sign and the joint shall be between route shields.
10. All Vertical J Assemblies are given a Sign Code of JV
11. For JV Assemblies that have a mixture of interstate and non interstate shields, arrows and cardinals shall be white on blue.

ROUTE MARKERS & COMPONENTS
IN TYPICAL ASSEMBLIES

WISCONSIN DEPT OF TRANSPORTATION

APPROVED Matthew R Rauch
for State Traffic Engineer

DATE 3/25/13 PLATE NO. A2-1S.7

7

7

PROJECT NO:

SHEET NO: 165 E

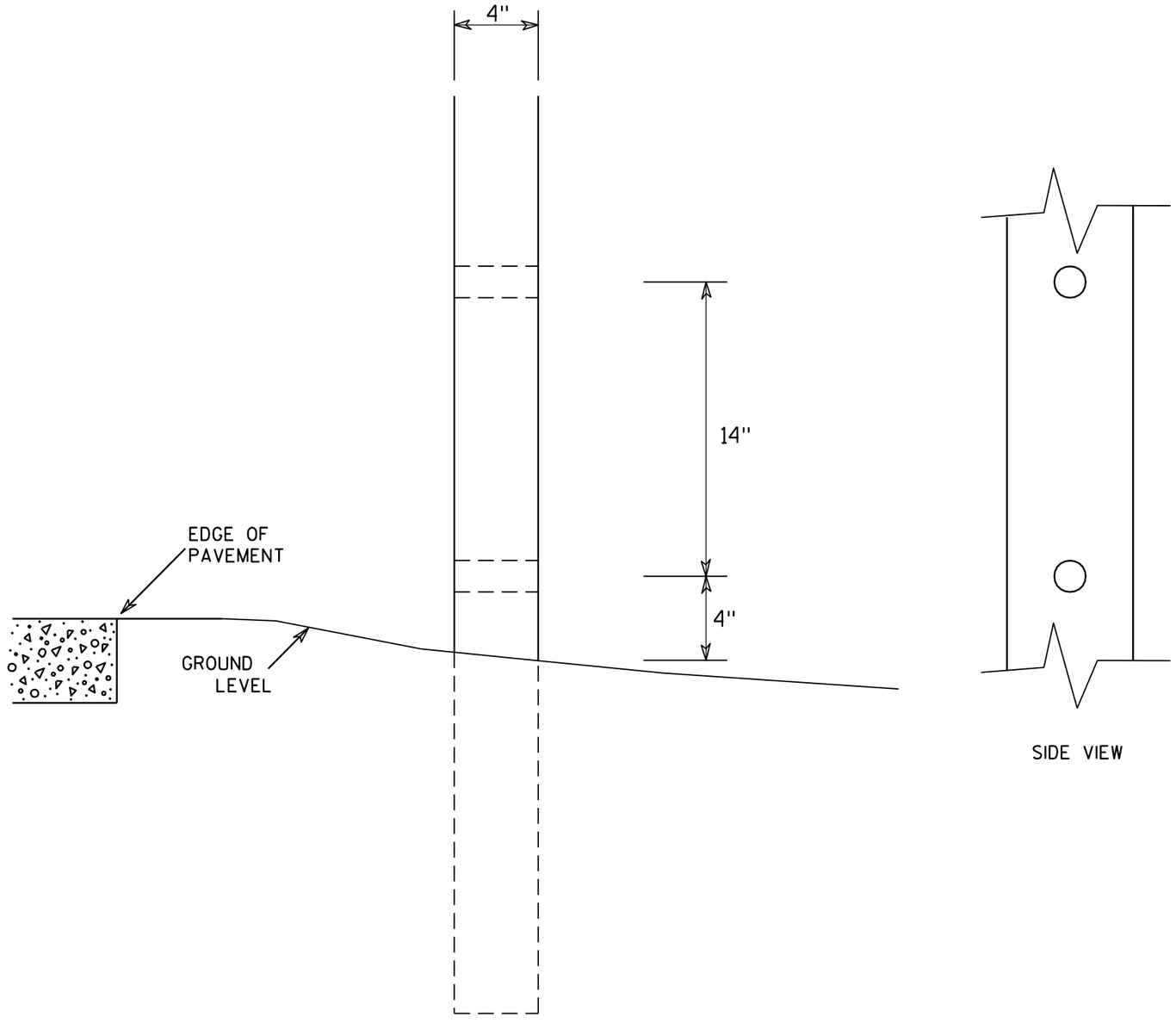

SIDE VIEW

GENERAL NOTES

1. All 4 x 6 Wood Posts shall be modified by having two 1½" diameter holes drilled perpendicular to the roadway centerline.

7

7

4 X 6 WOOD POST MODIFICATIONS

WISCONSIN DEPT OF TRANSPORTATION

APPROVED Chester J Spang
for State Traffic Engineer

DATE 3/27/97 PLATE NO. A4-11.2

PROJECT NO:	HWY:	COUNTY:		SHEET NO: 166	E

URBAN AREA

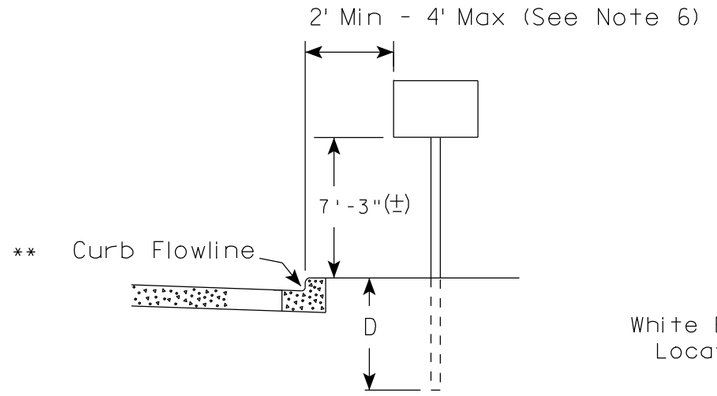

RURAL AREA (See Note 2)

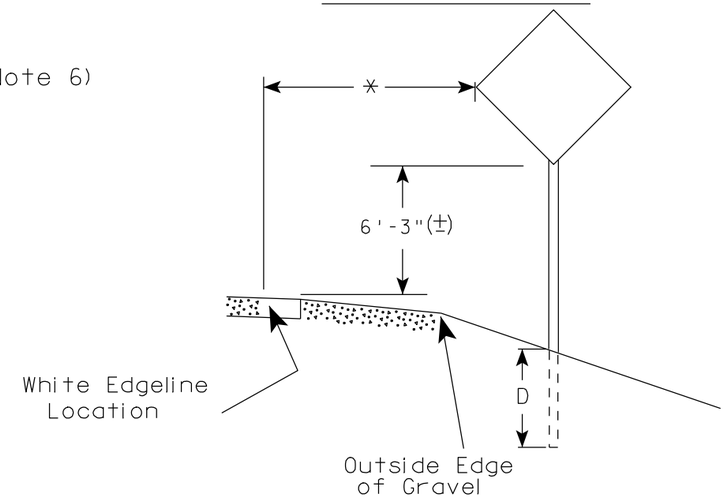

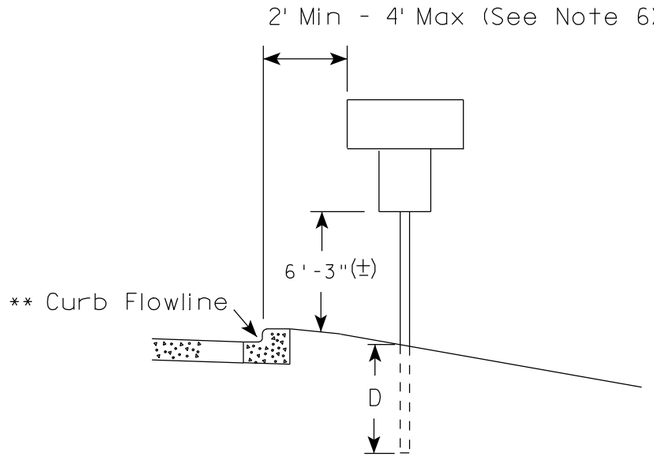

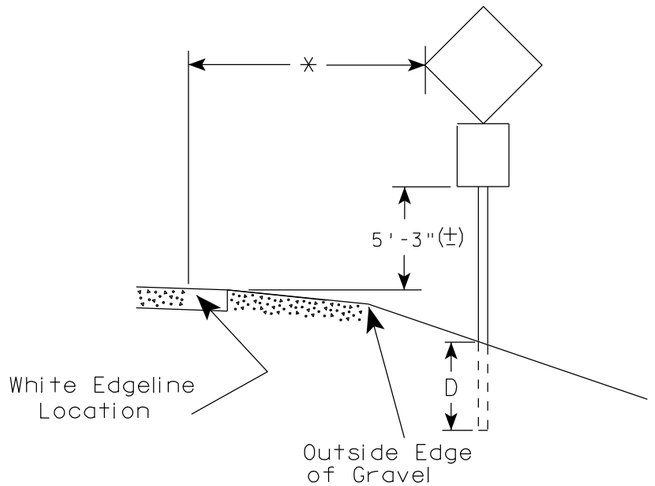

GENERAL NOTES

1. Signs wider than 4 feet or larger than 20 sq. ft. shall be mounted on multiple posts. Refer to plate A4-4.
2. If signs are mounted on barrier wall, see A4-10 sign plate.
3. For expressways and freeways, mounting height is 7'- 3" (±) or 6'-3" (±) depending upon existence of a sub-sign.
4. Minimum mounting height for J assemblies (A4-5) is 7'-3" (±) or 6'-3" (±) per urban or rural detail respectively.
5. Minimum mounting height for signs mounted on traffic signal poles is 5'- 3" (±).
6. Offset distance shall be consistent with existing signs or consistent throughout length of project.
7. The (±) tolerance for mounting height is 3 inches.
8. Folding stop signs (R1-1F) shall be mounted at a height of 5'-3" (±) or as directed by the Engineer.
9. The Double Arrow sign (W12-1) shall be mounted at a height of 2'-3" (±). The Chevron sign (W1-8), Roundabout Chevron panel (R6-4B), Enhanced Reference Markers, Clearance Markers (W5-52), Mile Markers (D10 series) & End of Rod Markers (W5-56 & W5-56A) shall be mounted at a height of 4'-3" (+).

POST EMBEDMENT DEPTH

Area of Sign Installation (Sq. Ft.)	D (Min)
20 or Less	4'
Greater than 20	5'

** The existence of curb and gutter does not in itself mandate the vertical clearance illustrated. That height is typically measured where there is sidewalk adjacent to the roadway or parking is permitted. In the absence of sidewalk vertical clearance is measured from the top of the curb. Offset of signs is measured from the flow line.

* 6 feet from edge of a paved shoulder or 12 feet from the edge of pavement (edge line location) or 2 feet from outside edge of gravel, whichever is greater unless directed by project engineer.

TYPICAL INSTALLATION OF PERMANENT TYPE II SIGNS ON SINGLE POSTS

WISCONSIN DEPT OF TRANSPORTATION

APPROVED Matthew R Rauch
for State Traffic Engineer

DATE 5/24/2013 PLATE NO. A4-3.17

PROJECT NO:	HWY:	COUNTY:		SHEET NO: 167	E

URBAN AREA

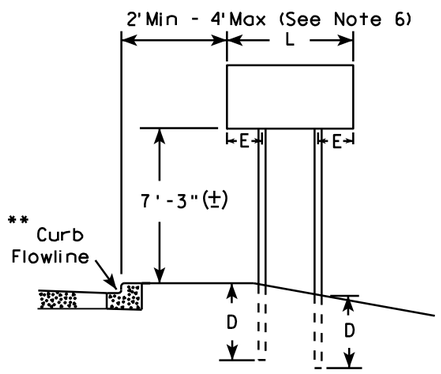

RURAL AREA (See Note 3)

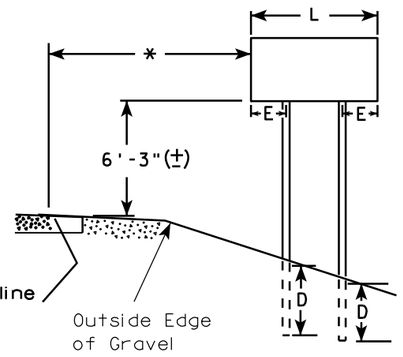

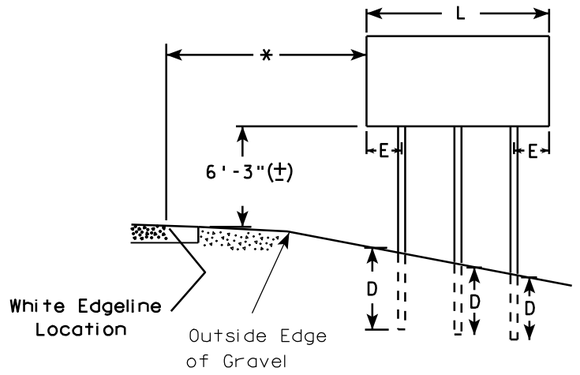

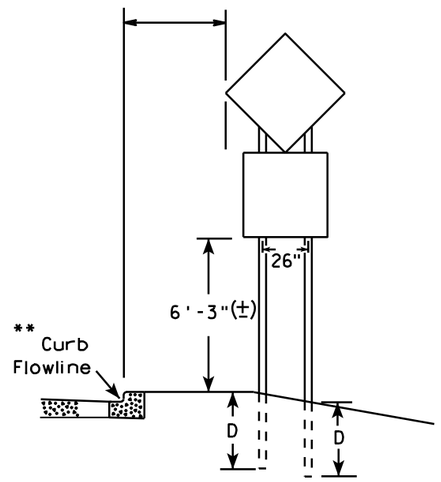

48" DIAMOND WARNING SIGN

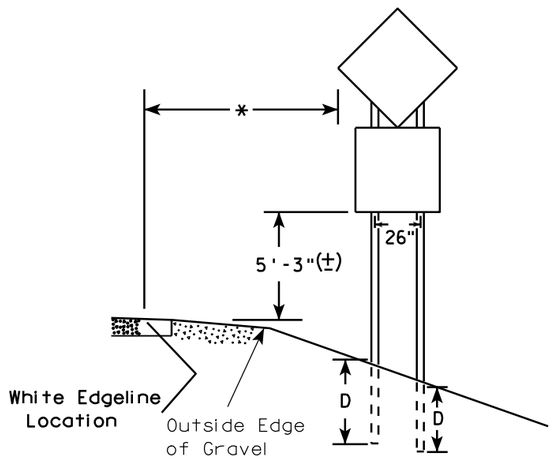

48" DIAMOND WARNING SIGN

SIGN SHAPE OTHER THAN DIAMOND (TWO POSTS REQUIRED)	
L	E
Greater than 48" Less than 60"	12"
60" to 120"	L/5

***

SIGN SHAPE OTHER THAN DIAMOND (THREE POSTS REQUIRED)	
L	E
Greater than 120" less than 168"	12"

SIGN SHAPE OTHER THAN DIAMOND (FOUR POSTS REQUIRED)	
L	E
168" and greater	12"

POST EMBEDMENT DEPTH

Area of Sign Installation (Sq. Ft.)	D (Min)
20 or Less	4'
Greater than 20	5'

GENERAL NOTES

1. For multiple post installations, individual post spacing shall be greater than 3'-6".
2. See tables below for required number of posts.
3. For expressways and freeways, mounting height is 7'-3" (±) or 6'-3" (±) depending upon existence of sub-sign.
4. The (±) tolerance for mounting height is 3 inches.
5. Minimum mounting height for J assemblies (A4-5) is 7'-3" (±) or 6'-3" (±) per urban or rural detail respectively.
6. Offset distance shall be consistent with existing signs or consistent throughout length of project.
7. Folding stop signs (R1-1F) shall be mounted at a height of 5'-3" (±) or as directed by the engineer.
8. The Double Arrow sign (W12-1) shall be mounted at a height of 2'-3" (±). The Chevron sign (W1-8), Roundabout Chevron panel (R6-4B), Clearance Markers (W5-52), Mile Markers (D10 series) & End of Road Markers (W5-56 & W5-56A) shall be mounted at a height of 4"-3" (±).

* 6 feet from edge of a paved shoulder or 12 feet from the edge of pavement (edge line location) or 2 feet from outside edge of gravel, whichever is greater unless directed by project engineer.

** The existence of curb and gutter does not in itself mandate the vertical clearance illustrated. That height is typically measured where there is sidewalk adjacent to the roadway or parking is permitted. In the absence of sidewalk vertical clearance is measured from the top of the curb. Offset of signs is measured from the flow line.

*** See A4-3 sign plate for signs 4' or less in width or 20 S.F. or less in area.

TYPICAL INSTALLATION OF TYPE II SIGNS ON MULTIPLE POSTS

WISCONSIN DEPT OF TRANSPORTATION

APPROVED Matthew R Rauch
for State Traffic Engineer

DATE 9/21/2011 PLATE NO. A4-4.11

PROJECT NO:	HWY:	COUNTY:		SHEET NO: 168	E

7

FILE NAME : C:\Users\PROJECTS\tr_stdplate\A44.DGN PLOT DATE : 21-SEP-2011 13:36 PLOT BY : mscsja PLOT NAME : PLOT SCALE : 109.249131:1.000000
WISDOT/CADDS SHEET 42

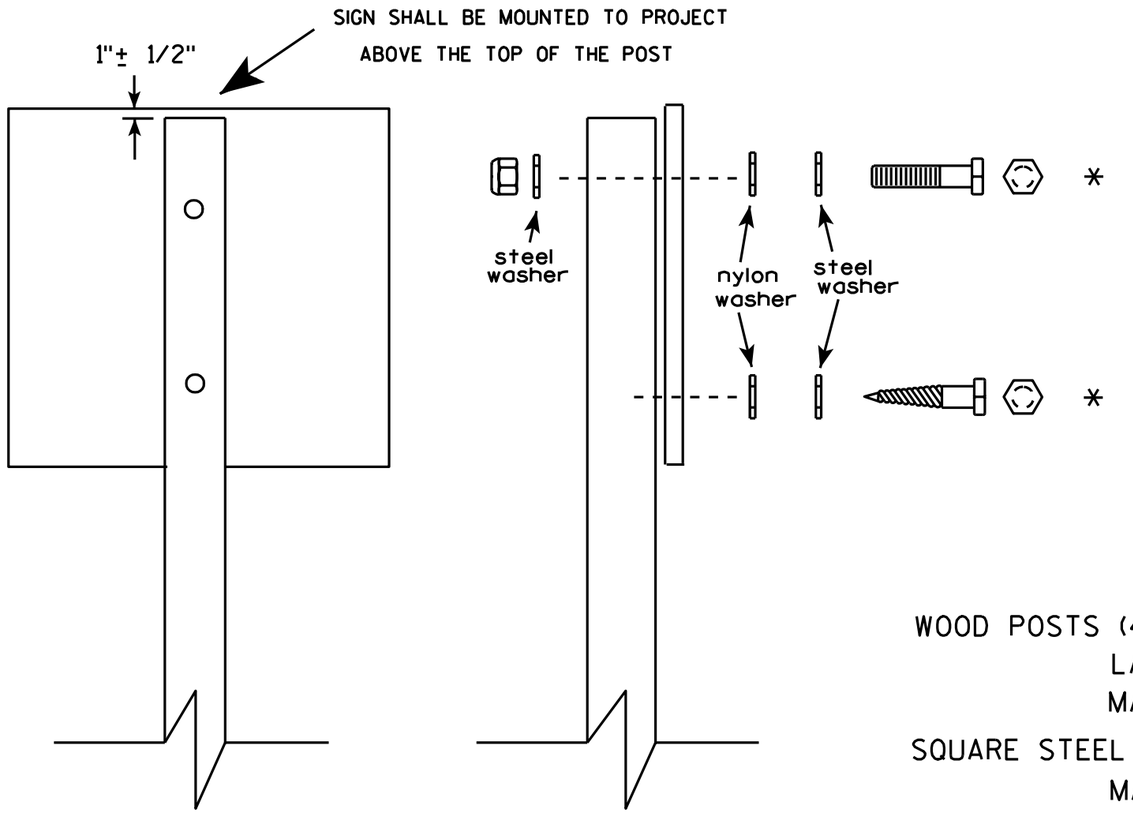

Nuts, bolts and lags used for mounting signs shall have hexagonal heads and shall be either :

a. Hot dip galvanized in accordance with ASTM Designation: A 153, Class D, or SC 3

b. Electro-galvanized in accordance with ASTM Designation : B 633, TYPE III, SC 3.

Threads on bolts and nuts shall be manufactured with sufficient allowance for the cadmium plate or galvanized coating to permit the nuts to run freely on the bolts.

WOOD POSTS (4" x 4" or 4" x 6")
LAG SCREWS - 3/8" X 3"
MACHINE BOLTS - 5/16" X 6-1/2" or 7" Length w/ nuts

SQUARE STEEL POSTS (2" x 2")
MACHINE BOLTS - 3/8" X 3-1/4" Length w/ nuts
RIVETS - 9/32 " (6605-9-6) BULB-TITE, TRI-FOLD, ALUMINUM BODY/MANDREL
O.D. FLANGE .720-.765 INCH, GRIP RANGE .042-.375 INCH

WASHERS (ALL POSTS) -
1-1/4" O.D. X 3/8" I.D. X 1/16" STEEL
1-1/4" O.D. X 3/8" I.D. X .080 NYLON for all Type H signs.

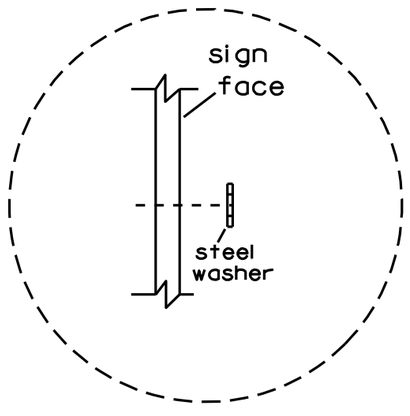

Washer Placement when Sign Has Other Than Type H or Type F Face

* Two different fastening systems are shown for illustration purposes. On any individual sign, either one or the other system shall be used. Actual number of fasteners per sign varies with the sign area, but normally there are two. For a single post installation, all signs greater than 9 sq. ft. require the use of 3 fasteners.

ATTACHMENT OF SIGNS TO POSTS

WISCONSIN DEPT OF TRANSPORTATION

APPROVED Matthew R Rauch
for State Traffic Engineer

DATE 3/23/10 PLATE NO. A4-8.7

7

7

PROJECT NO:

SHEET NO: 169 E

* VARIES

NOTES

1. Sign is Type II - Type H Reflective - reference WIS DOT Standard Specification for HIGHWAY and STRUCTURE CONSTRUCTION latest edition.
2. Color:
   Background - White
   Message - (See Note 5)
3. Message Series - (See Note 6)
4. Corners may be square or rounded when base material is plywood but borders shall be rounded as shown. When base material is metal, the corners and borders shall be rounded.
5. Border - Blue
   Line 1 - Red
   Line 2 - Black
   Line 3-5 - Blue
6. Line 1 - Dutch 8011L
   Line 2 - Series E
   Line 3-5 - Series C
7. Contractor shall provide and install a new post bracket in accordance with the I55-56B sign detail.

Background Colors of Symbol*

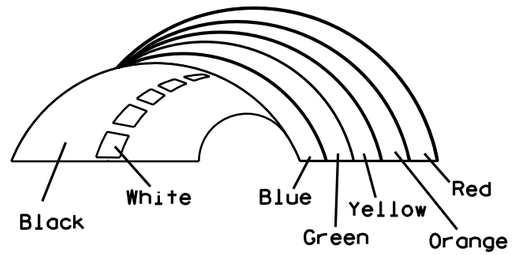

*1/4" Black Border between each color of rainbow and border of rainbow

SIZE	A	B	C	D	E	F	G	H	I	J	K	L	M	N	O	P	Q	R	S	T	U	V	W	X	Y	Z	Area sq. ft.
1																											
2	30	36	1 1/2	1/2	5/8	3	2	3 1/2	2 7/8	1	8	2 1/8	11 1/4	11 1/8	9 3/8	1 1/4		3/4	12 5/8	7 1/2							7.5
3																											
4																											
5																											

STANDARD SIGN
I55-56

WISCONSIN DEPT OF TRANSPORTATION

APPROVED Matthew R Rauch
for State Traffic Engineer

DATE 4/27/11 PLATE NO. 155-56.3

PROJECT NO:	HWY:	COUNTY:		SHEET NO: 170

ISOMETRIC VIEW

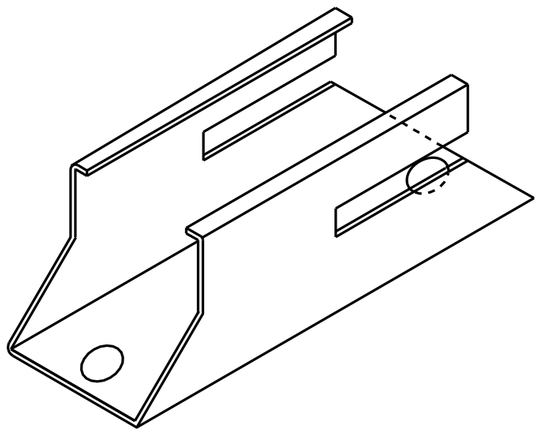

TOP VIEW

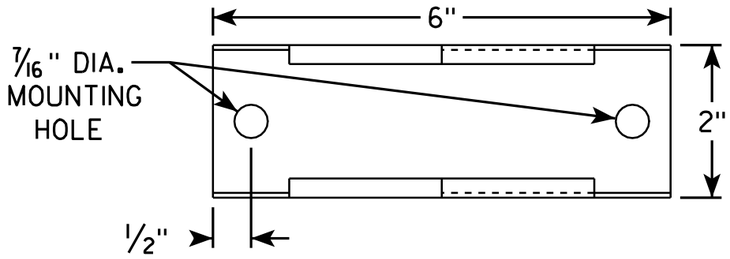

SIDE VIEW

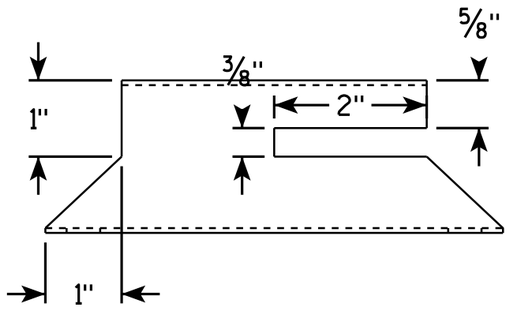

END VIEW

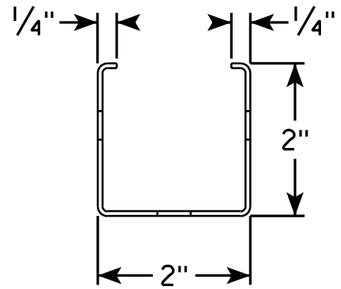

NOTES

1. Must be capable of permanent attachment to a wood or steel channel sign post utilizing the fastening hardware specified on the A4-8 sign plate.
2. Shall be entirely primed and painted with two coats of a black powder coated enamel paint.
3. Shall be made with 12 gauge steel, and incorporate no welds, no hinged components, no threaded lock-type components, and no parts which are loose or can be separated from the main body.
4. Shall have rounded edges with at least 1/8" radii.
5. Shall not have unrounded and uncoated metal edges which can contact the back surface of the roll-up sign.
6. Top of bracket shall be mounted 2' below the bottom of the I55-56 sign.
7. Cost of bracket and fastening hardware shall be incidental to the I55-56 sign.

SIDE VIEW

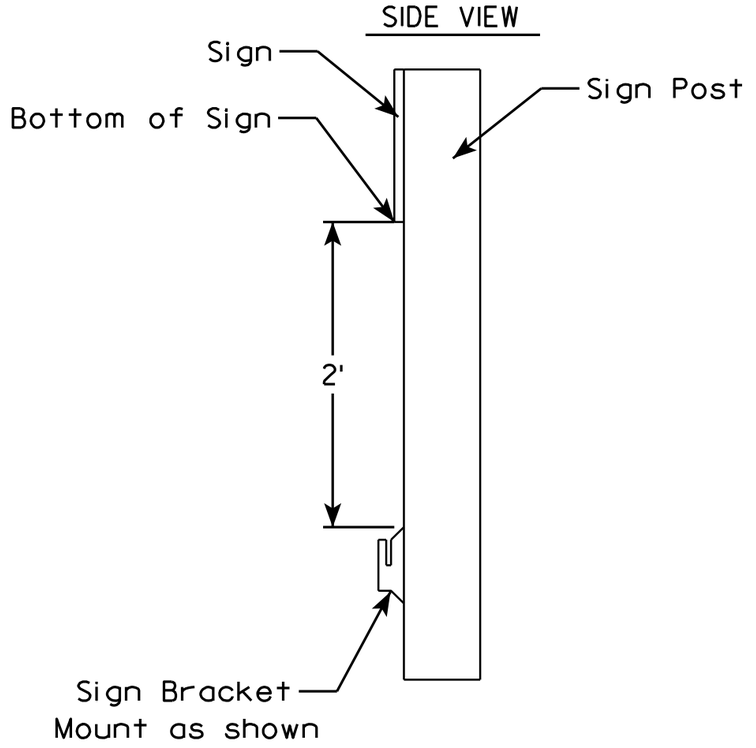

ROLLUP SIGN BRACKET
I55-56B

WISCONSIN DEPT OF TRANSPORTATION

APPROVED Matthew R Rauch
for State Traffic Engineer

DATE 2/5/10 PLATE NO. I55-56B.1

PROJECT NO:	HWY:	COUNTY:		SHEET NO: 171	E

NOTES

1. Sign is Type II - See Note 6 - reference WIS DOT Standard Specification for HIGHWAY and STRUCTURE CONSTRUCTION latest edition.
2. Color:
   Background - White & Black - See Note 6
   Message - Black
3. Message Series - See note 5
4. Corners may be square or rounded when base material is plywood but borders shall be rounded as shown. When base material is metal, the corners and borders shall be rounded.
5. Substitute appropriate numerals and adjust spacing as per Plate A10-1.
6. Permanent Signs
   Background - Type H Reflective
   Detour or other temporary signs
   Background - Reflective

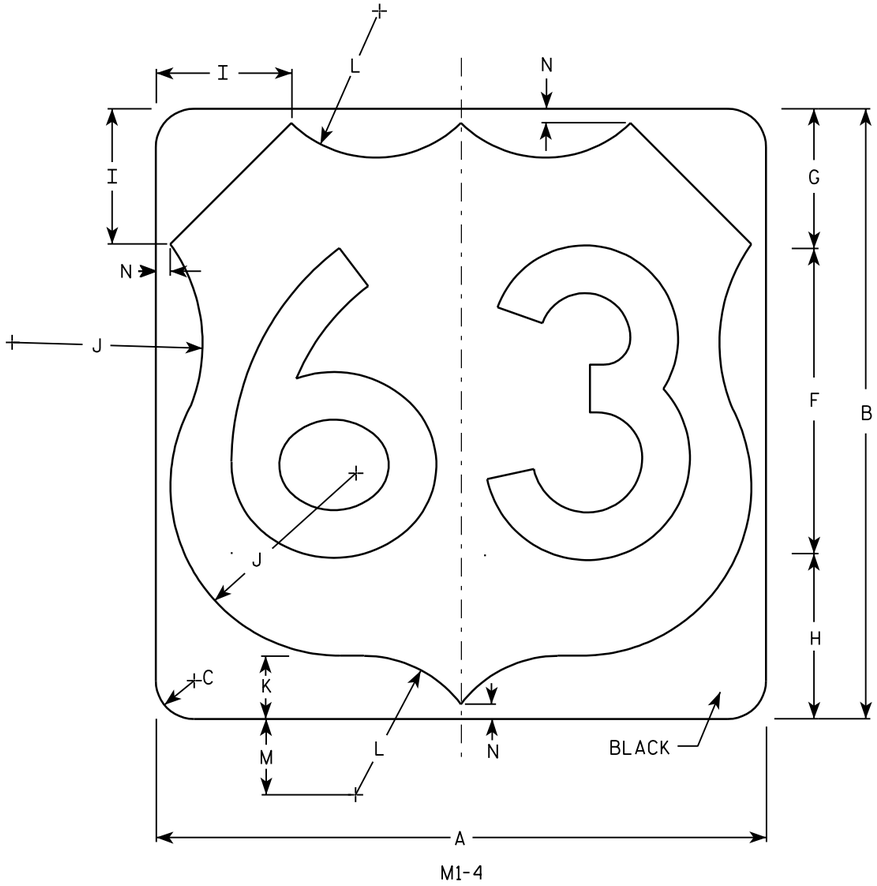

M1-4

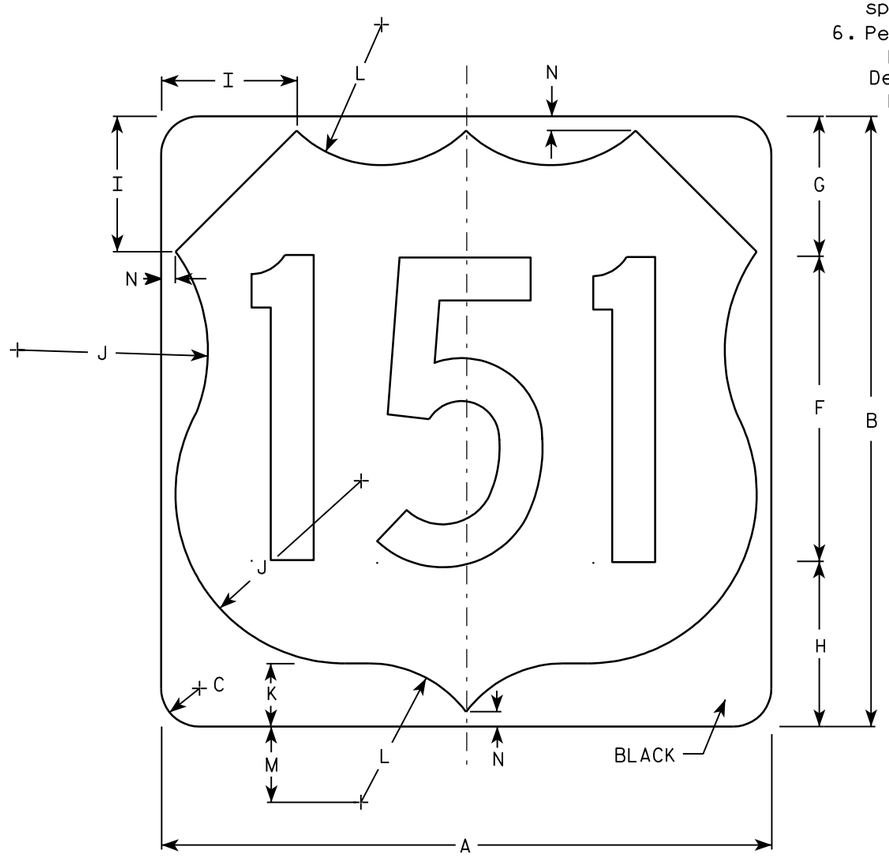

M1-4

Metric equivalent for this sign is:

SIZE	
1	
2	600 mm X 600 mm
3	900 mm X 900 mm
4	900 mm X 900 mm
5	900 mm X 900 mm

SIZE	A	B	C	D	E	F	G	H	I	J	K	L	M	N	O	P	Q	R	S	T	U	V	W	X	Y	Z	Area sq. ft.	Area m2
1																												
2	24	24	1 1/2			12	5 1/2	6 1/2	5	7 1/2	2 1/2	5 1/2	3	1/2													4.0	.36
3	36	36	2 1/4			18	8 1/4	9 1/4	7 1/4	11 1/4	3 3/4	8 1/4	4 1/2	3/4													9.0	.81
4	36	36	2 1/4			18	8 1/4	9 1/4	7 1/4	11 1/4	3 3/4	8 1/4	4 1/2	3/4													9.0	.81
5	36	36	2 1/4			18	8 1/4	9 1/4	7 1/4	11 1/4	3 3/4	8 1/4	4 1/2	3/4													9.0	.81

USH MARKER
M1-4 FOR ASSEMBLIES

WISCONSIN DEPT OF TRANSPORTATION

APPROVED Matthew R Rauch
for State Traffic Engineer

DATE 08/25/05 PLATE NO. M1-4.9

PROJECT NO: | HWY: | COUNTY: | SHEET NO: 172 | E

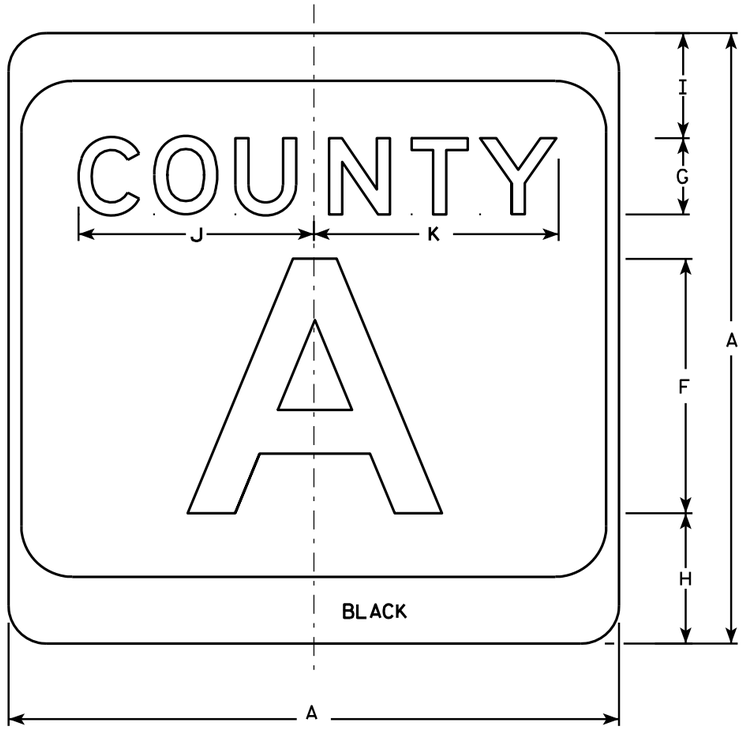

M1-5A

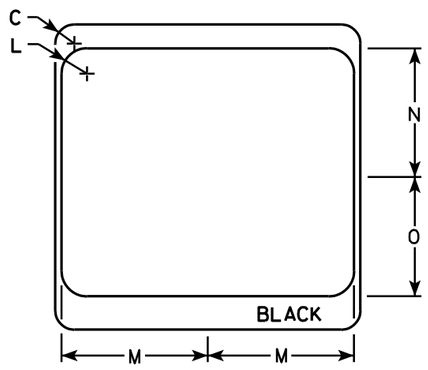

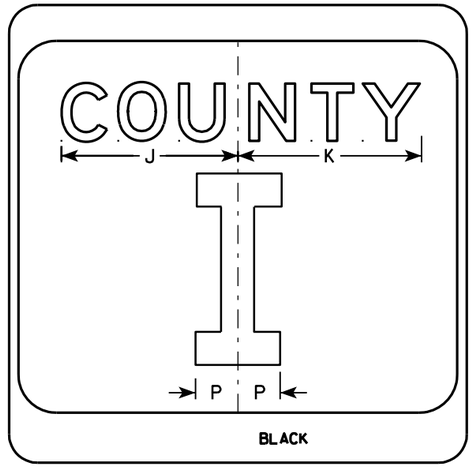

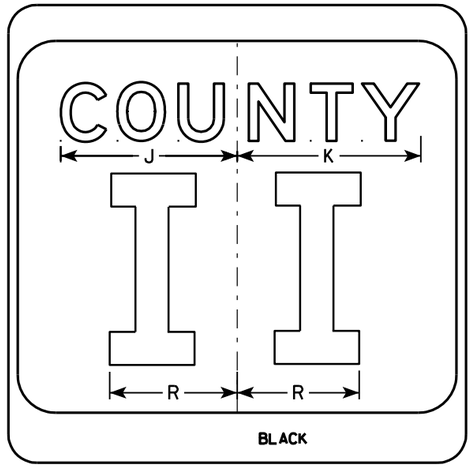

NOTES

1. Sign is Type II - see Note 7 - reference WIS DOT Standard Specification for HIGHWAY and STRUCTURE CONSTRUCTION latest edition.
2. Color:
   Background - White & Black - See Note 7
   Message - Black
3. Message Series - see Note 5
4. Corners may be square or rounded when base material is plywood but borders shall be rounded as shown. When base material is metal, the corners and borders shall be rounded.
5. Message Series E for 1 letter.
   Message Series D for 2 letters unless message is too big then Series C.
   Message Series C for 3 letters unless message is too big then Series B.
6. Substitute appropriate letters & optically center to achieve proper balance.
7. Permanent Signs
   Background - Type H Reflective
   Detour or temporary Signs
   Background - Reflective

SIZE	A	B	C	D	E	F	G	H	I	J	K	L	M	N	O	P	Q	R	S	T	U	V	W	X	Y	Z	Area sq. ft.
1																											
2	24		1 1/2			10	3	5 1/8	4 1/8	9 1/4	9 5/8	2	11 1/2	10 1/8	9 3/8	2 1/4		6 5/8									4.0
3	36		2 1/4			16	4	7 5/8	5 5/8	12 1/4	12 7/8	3	17 1/8	15 1/4	14	3 3/8		10									9.0
4	36		2 1/4			16	4	7 5/8	5 5/8	12 1/4	12 7/8	3	17 1/8	15 1/4	14	3 3/8		10									9.0
5	36		2 1/4			16	4	7 5/8	5 5/8	12 1/4	12 7/8	3	17 1/8	15 1/4	14	3 3/8		10									9.0

CTH MARKER
M1-5A FOR ASSEMBLIES

WISCONSIN DEPT OF TRANSPORTATION

APPROVED Matthew R Rauch
for State Traffic Engineer

DATE 9/27/11 PLATE NO. M1-5A.8

PROJECT NO:	HWY:	COUNTY:		SHEET NO: 173	E

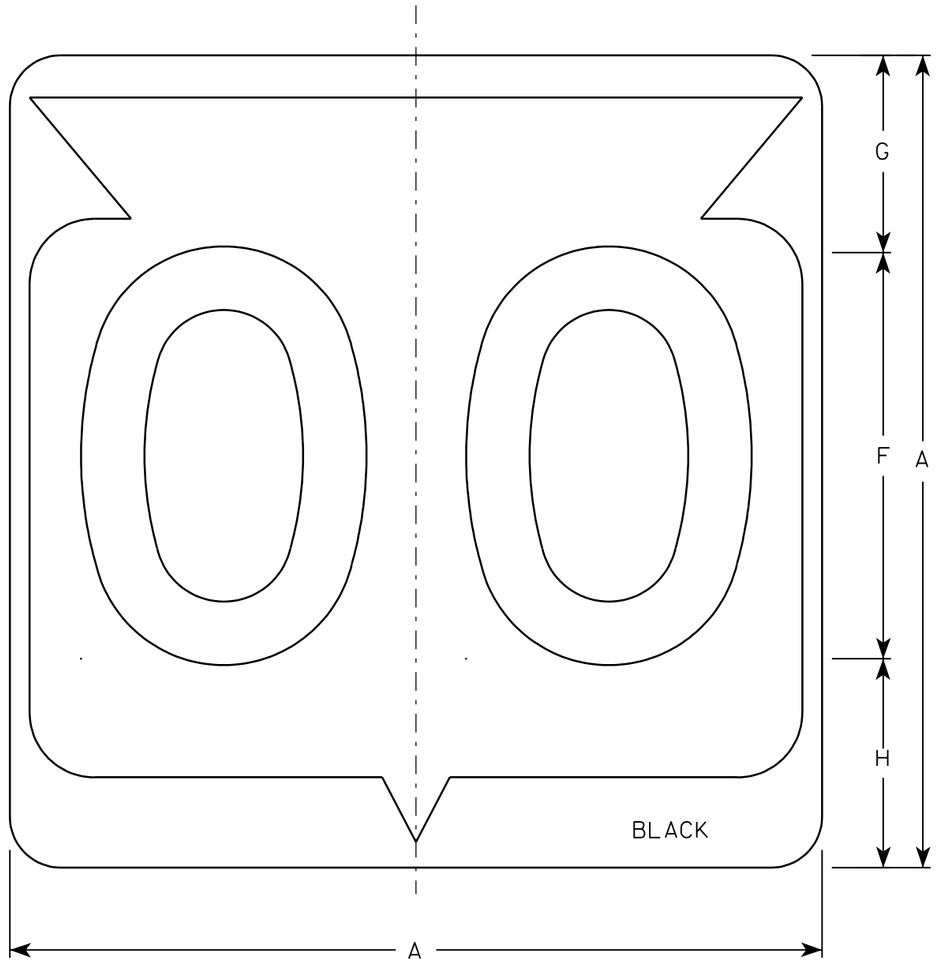

M1-6

NOTES

1. Sign is Type II - See Note 6 - reference WIS DOT Standard Specification for HIGHWAY and STRUCTURE CONSTRUCTION latest edition.
2. Color:
   Background - White & Black - See Note 6
   Message - Black
3. Message Series - See note 5
4. Corners may be square or rounded when base material is plywood but borders shall be rounded as shown. When base material is metal, the corners and borders shall be rounded.
5. Substitute appropriate Series numerals and adjust spacing as per plate A10-1.
6. Permanent Signs
   Background - Type H Reflective
   Detour or temporary Signs
   Background - Reflective

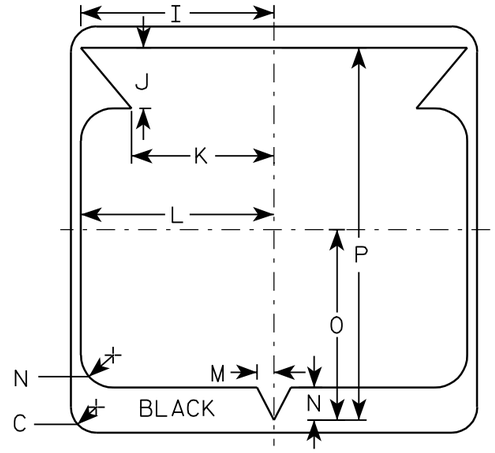

Metric equivalent for this sign is:

SIZE	
1	
2	600 mm X 600 mm
3	900 mm X 900 mm
4	900 mm X 900 mm
5	900 mm X 900 mm

SIZE	A	B	C	D	E	F	G	H	I	J	K	L	M	N	O	P	Q	R	S	T	U	V	W	X	Y	Z	Area sq. ft.	Area m2
1																												
2	24		1 1/2			12	5 1/2	6 1/2	10 1/4	2 1/2	8 7/8	11 1/2	1	1 7/8	11 1/4	21 7/8											4.0	.36
3	36		2 1/4			18	8 3/4	9 1/4	15 3/8	5 3/8	12 5/8	17 1/8	1 1/2	2 7/8	16 7/8	33											9.0	.81
4	36		2 1/4			18	8 3/4	9 1/4	15 3/8	5 3/8	12 5/8	17 1/8	1 1/2	2 7/8	16 7/8	33											9.0	.81
5	36		2 1/4			18	8 3/4	9 1/4	15 3/8	5 3/8	12 5/8	17 1/8	1 1/2	2 7/8	16 7/8	33											9.0	.81

STATE ROUTE MARKER M1-6 FOR ASSEMBLIES

WISCONSIN DEPT OF TRANSPORTATION

APPROVED Chester J Spang for State Traffic Engineer

DATE 3/20/02 PLATE NO. M1-6.9

PROJECT NO:	HWY:	COUNTY:		SHEET NO: 174	E

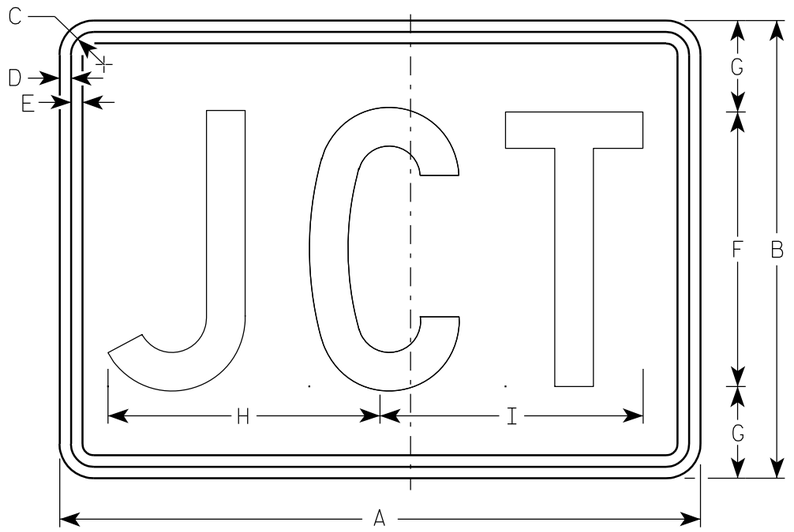

M2-1
MK2-1
MM2-1
MR2-1

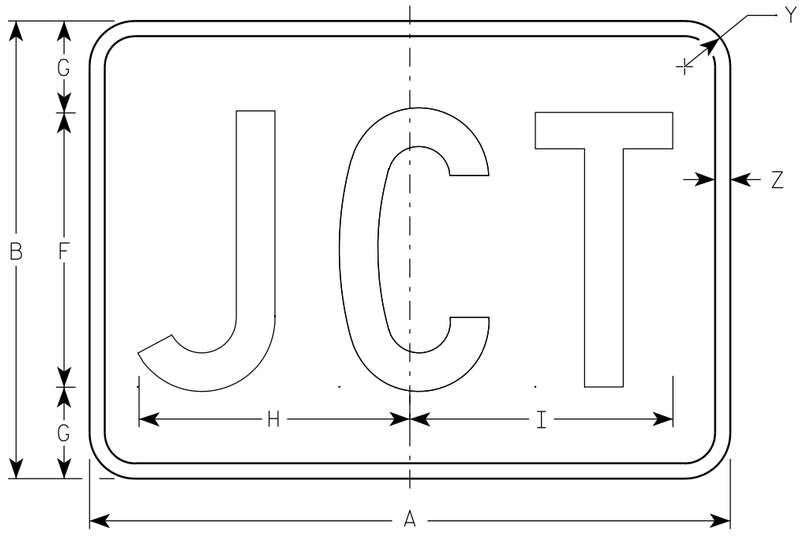

MB2-1
MG2-1
MN2-1

NOTES

1. Sign is Type II - See Note 5 - reference WIS DOT Standard Specification for HIGHWAY and STRUCTURE CONSTRUCTION latest edition.
2. Color:
   Background - See note 5
   Message - See note 5
3. Message Series - C
4. Corners may be square or rounded when base material is plywood but borders shall be rounded as shown. When base material is metal, the corners and borders shall be rounded.
5. M2-1 Background - White - Type H Reflective
   (Detour or temporary Signs - Reflective)
   Message - Black
   MB2-1 Background - Blue
   Message - White - Type H Reflective
   (Detour or temporary Signs - Reflective)
   MG2-1 Background - Green
   Message - White - Type H Reflective
   MK2-1 Background - Green
   Message - White - Type H Reflective
   MM2-1 Background - White - Type H Reflective
   Message - Green
   MN2-1 Background - Brown
   Message - White - Type H Reflective
   MR2-1 Background - Brown
   Message - Yellow - Type H Reflective

Metric equivalent for this sign is:

SIZE	
1	
2	525 mm X 375 mm
3	750 mm X 525 mm
4	750 mm X 525 mm
5	750 mm X 525 mm

SIZE	A	B	C	D	E	F	G	H	I	J	K	L	M	N	O	P	Q	R	S	T	U	V	W	X	Y	Z	Area sq. ft.	Area m2
1																												
2	21	15	1 1/8	3/8	3/8	9	3	8 7/8	8 5/8																1 1/2	1/2	2.20	0.20
3	30	21	1 1/8	3/8	3/8	13	4	12 7/8	12 3/8																1 1/2	1/2	4.40	0.20
4	30	21	1 1/8	3/8	3/8	13	4	12 7/8	12 3/8																1 1/2	1/2	4.40	0.20
5	30	21	1 1/8	3/8	3/8	13	4	12 7/8	12 3/8																1 1/2	1/2	4.40	0.20

STANDARD SIGN
M2-1

WISCONSIN DEPT OF TRANSPORTATION

APPROVED Matthew R Rauch
for State Traffic Engineer

DATE 3/16/10 PLATE NO. M2-1.10

PROJECT NO:	HWY:	COUNTY:		SHEET NO: 175	E

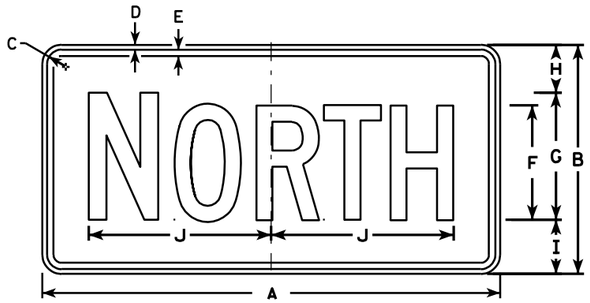

M3-1
MK3-1
MO3-1

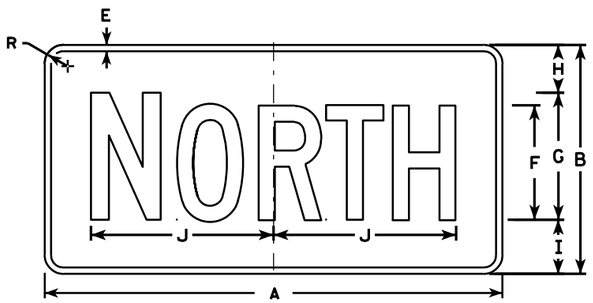

MB3-1
MG3-1
MM3-1
MN3-1

M3-2
MK3-2
MO3-2

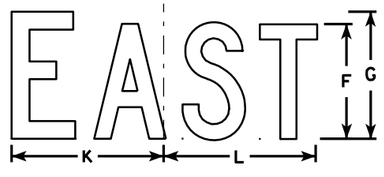

MB3-2
MG3-2
MM3-2
MN3-2

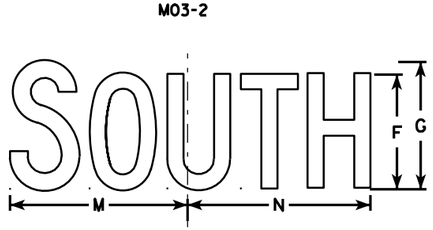

M3-3
MK3-3
MO3-3

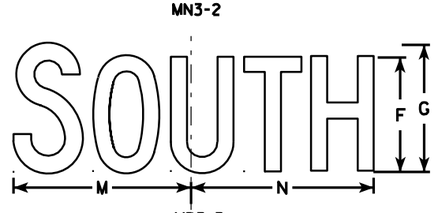

MB3-3
MG3-3
MM3-3
MN3-3

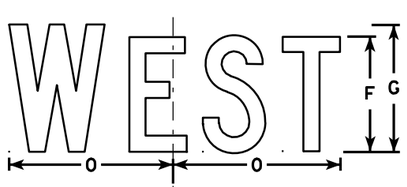

M3-4
MK3-4
MO3-4

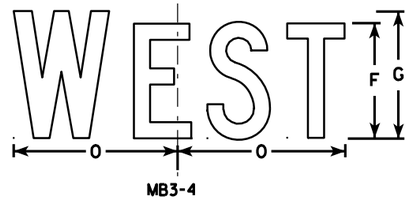

MB3-4
MG3-4
MM3-4
MN3-4

NOTES

1. All Signs Type II - See Note 5 - reference WIS DOT Standard Specification for HIGHWAY and STRUCTURE CONSTRUCTION latest edition.
2. Color:
   Background - See note 5
   Message - See note 5
3. Message Series - C
4. Corners may be square or rounded when base material is plywood but borders shall be rounded as shown. When base material is metal, the corners and borders shall be rounded.
5. M3-1 thru M3-4 Background - White - Type H Reflective
   (Detour or temporary signs - Reflective)
   Message - Black
   MB3-1 thru MB3-4 Background - Blue
   Message - White - Type H Reflective
   (Detour or temporary signs - Reflective)
   MG3-1 thru MG3-4 Background - Green
   Message - White - Type H Reflective
   MK3-1 thru MK3-4 Background - Green
   Message - White - Type H Reflective
   MM3-1 thru MM3-4 Background - White - Type H Reflective
   Message - Green
   MN3-1 thru MN3-4 Background - Brown
   Message - White - Type H Reflective
   M03-1 thru M03-4 Background - Orange - Reflective
   Message - Black
6. Note the first letter of each direction is larger than the remainder of the message.

SIZE	A	B	C	D	E	F	G	H	I	J	K	L	M	N	O	P	Q	R	S	T	U	V	W	X	Y	Z	Area sq. ft.
1																											
2	24	12	1 1/8	3/8	3/8	6	7	2 1/4	2 3/4	10 1/4	7 7/8	8 3/8	10 1/4	9 3/4	8 3/4			1 1/2									2.00
3	36	18	1 1/8	3/8	1/2	9	10	3 3/4	4 1/4	14 3/8	12	12 1/8	14	14 1/8	13			1 1/2									4.5
4	36	18	1 1/8	3/8	1/2	9	10	3 3/4	4 1/4	14 3/8	12	12 1/8	14	14 1/8	13			1 1/2									4.5
5	36	18	1 1/8	3/8	1/2	9	10	3 3/4	4 1/4	14 3/8	12	12 1/8	14	14 1/8	13			1 1/2									4.5

STANDARD SIGNS
M3-1 thur M3-4
SERIES

WISCONSIN DEPT OF TRANSPORTATION

APPROVED Matthew R Rauch for State Traffic Engineer

DATE 11/10/10 PLATE NO. M3-1.12

PROJECT NO:	HWY:	COUNTY:		SHEET NO: 176	E

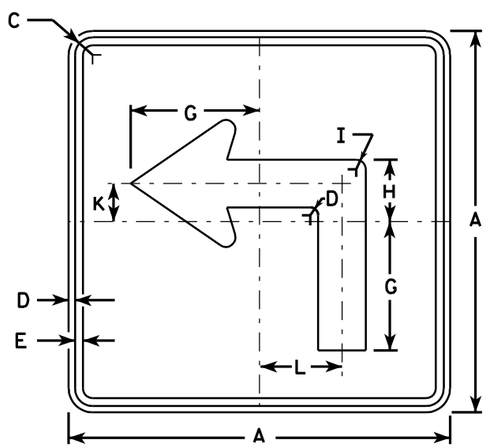

M5-1L
MK5-1L
MM5-1L
MO5-1L
MR5-1L

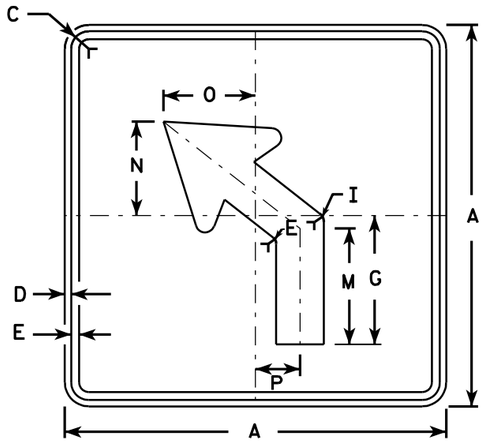

M5-2L
MK5-2L
MM5-2L
MO5-2L
MR5-2L

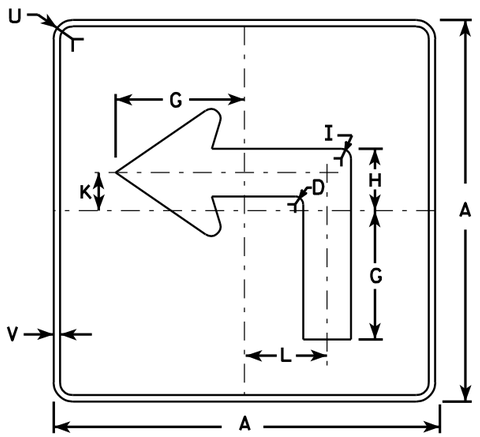

MB5-1L
MG5-1L
MN5-1L

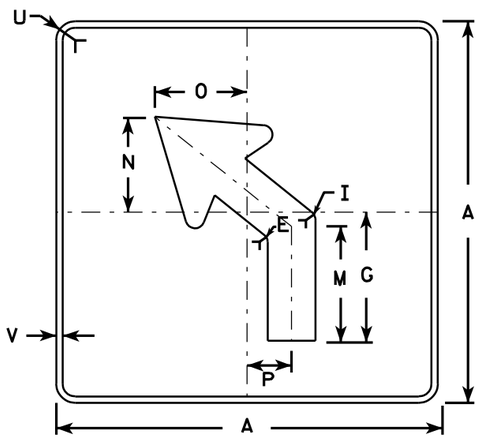

MB5-2L
MG5-2L
MN5-2L

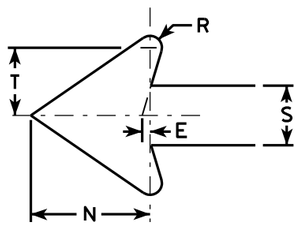

NOTES

1. Signs are Type II - See Note 4 - reference WIS DOT Standard Specification for HIGHWAY and STRUCTURE CONSTRUCTION latest edition.
2. Color:
   Background - See note 4
   Message - See note 4
3. Corners may be square or rounded when base material is plywood but borders shall be rounded as shown. When base material is metal, the corners and borders shall be rounded.
4. M5-1 and M5-2 Background - White - Type H Reflective (Detour or temporary Signs - Reflective) Message - Black
   MB5-1 and MB5-2 Background - Blue Message - White - Type H Reflective (Detour or temporary Signs - Reflective)
   MG5-1 and MG5-2 Background - Green Message - White - Type H Reflective
   MK5-1 and MK5-2 Background - Green Message - White Type H Reflective
   MM5-1 and MM5-2 Background - White - Type H Reflective Message - Green
   MN5-1 and MN5-2 Background - Brown Message - White - Type H Reflective
   MO5-1 and MO5-2 Background - Orange - Reflective Message - Black
   MR5-1 and MR5-2 Background - Brown Message - Yellow - Type H Reflective
5. M5-1R same as M5-1L except arrow points right.
6. M5-2R same as M5-2L except arrow tilts right.

Metric equivalent for this sign is:

SIZE	
1	
2	525 mm X 525 mm
3	750 mm X 750 mm
4	750 mm X 750 mm
5	750 mm X 750 mm

SIZE	A	B	C	D	E	F	G	H	I	J	K	L	M	N	O	P	Q	R	S	T	U	V	W	X	Y	Z	Area sq. ft.	Area m2
1																												
2	21		1 1/8	3/8	3/8		7	3 3/8	5/8		2 1/8	4 1/2	6 3/8	5 1/4	5	2 1/2		1/2	2 5/8	3	1 1/2	1/2					3.06	0.28
3	30		1 3/8	1/2	5/8		10 1/8	4 1/8	7/8		3	6 1/2	9 1/8	7 1/2	7 1/4	3 1/2		3/4	3 3/4	4 1/4	1 7/8	1/2					6.25	0.56
4	30		1 3/8	1/2	5/8		10 1/8	4 7/8	7/8		3	6 1/2	9 1/8	7 1/2	7 1/4	3 1/2		3/4	3 3/4	4 1/4	1 7/8	1/2					6.25	0.56
5	30		1 3/8	1/2	5/8		10 1/8	4 7/8	7/8		3	6 1/2	9 1/8	7 1/2	7 1/4	3 1/2		3/4	3 3/4	4 1/4	1 7/8	1/2					6.25	0.56

STANDARD SIGN
M5-1 & M5-2

WISCONSIN DEPT OF TRANSPORTATION

APPROVED Matthew R Rauch
for State Traffic Engineer

DATE 3/16/10 PLATE NO. M5-1.11

PROJECT NO:	HWY:	COUNTY:		SHEET NO: 177	E

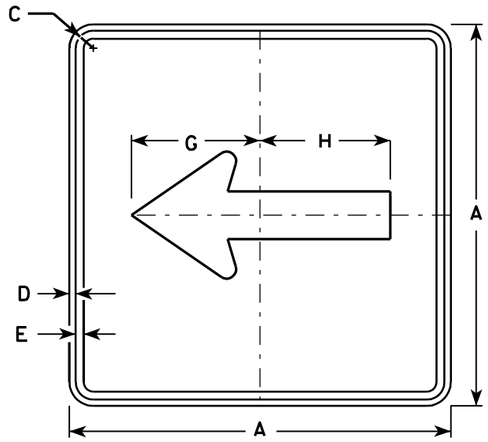

M6-1
MK6-1
MM6-1
MO6-1
MR6-1

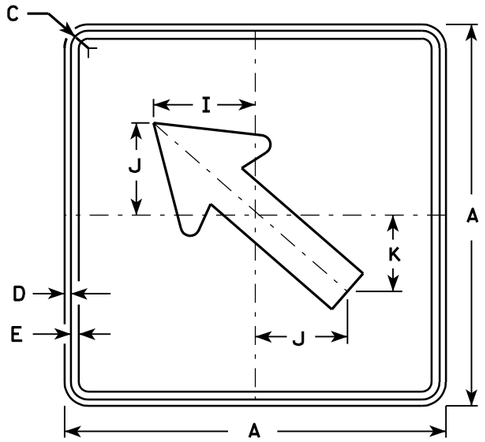

M6-2
MK6-2
MM6-2
MO6-2
MR6-2

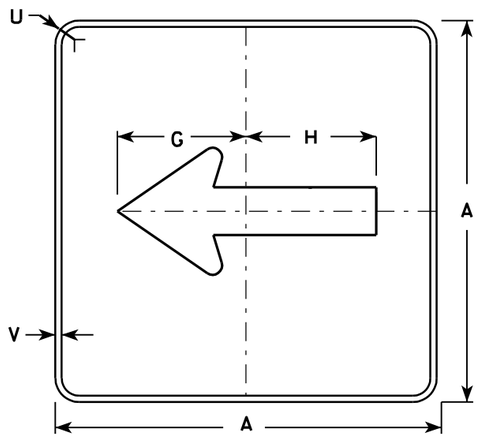

MB6-1
MG6-1
MN6-1

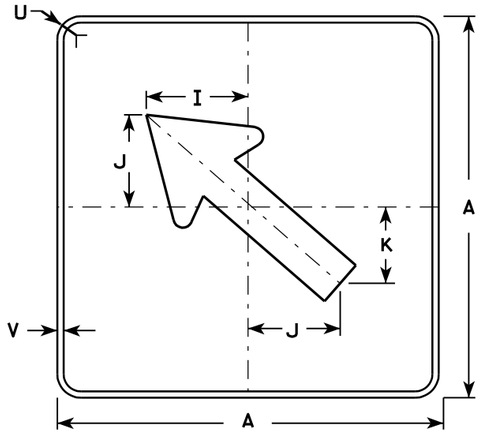

MB6-2
MG6-2
MN6-2

NOTES

1. Signs are Type II - See Note 4 - reference WIS DOT Standard Specification for HIGHWAY and STRUCTURE CONSTRUCTION latest edition.
2. Color:
   Background - See note 4
   Message - See note 4
3. Corners may be square or rounded when base material is plywood but borders shall be rounded as shown. When base material is metal, the corners and borders shall be rounded.
4. M6-1 and M6-2 Background - White - Type H Reflective (Detour or temporary Signs - Reflective) Message - Black
   MB6-1 and MB6-2 Background - Blue Message - White - Type H Reflective (Detour or temporary Signs - Reflective)
   MG6-1 and MG6-2 Background - Green Message - White - Type H Reflective
   MK6-1 and MK6-2 Background - Green Message - White - Type H Reflective
   MM6-1 and MM6-2 Background - White - Type H Reflective Message - Green
   MN6-1 and MN6-2 Background - Brown Message - White - Type H Reflective
   MO6-1 and MO6-2 Background - Orange - Reflective Message - Black
   MR6-1 and MR6-2 Background - Brown Message - Yellow - Type H Reflective

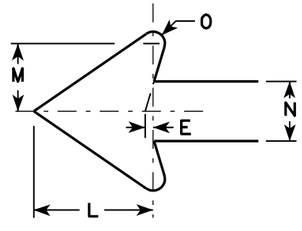

Metric equivalent for this sign is:

SIZE	
1	
2	525 mm X 525 mm
3	750 mm X 750 mm
4	750 mm X 750 mm
5	750 mm X 750 mm

SIZE	A	B	C	D	E	F	G	H	I	J	K	L	M	N	O	P	Q	R	S	T	U	V	W	X	Y	Z	Area sq. ft.	Area m2
1																												
2	21		1 1/8	3/8	3/8		7 1/2	7 1/8	5 5/8	5	4 1/4	5 1/4	3	2 5/8	1/2						1 1/2	1/2					3.06	0.28
3	30		1 3/8	1/2	5/8		10 3/4	10 1/4	8	7 1/4	6	7 1/2	4 1/4	3 3/4	3/4						1 7/8	1/2					6.25	0.56
4	30		1 3/8	1/2	5/8		10 3/4	10 1/4	8	7 1/4	6	7 1/2	4 1/4	3 3/4	3/4						1 7/8	1/2					6.25	0.56
5	30		1 3/8	1/2	5/8		10 3/4	10 1/4	8	7 1/4	6	7 1/2	4 1/4	3 3/4	3/4						1 7/8	1/2					6.25	0.56

STANDARD SIGN M6-1 & M6-2 SERIES

WISCONSIN DEPT OF TRANSPORTATION

APPROVED Matthew R Rauch
for State Traffic Engineer

DATE 3/16/10 PLATE NO. M6-1.12

PROJECT NO:	HWY:	COUNTY:		SHEET NO: 178	E

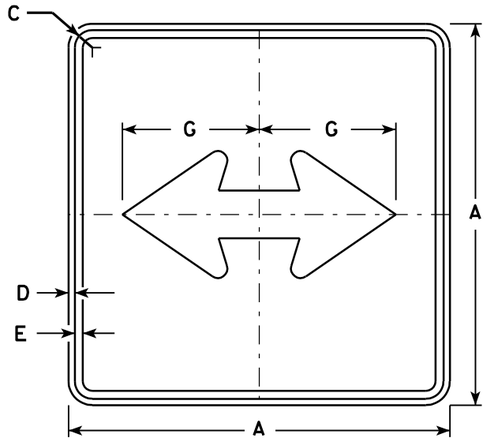

M6-4
MK6-4
MM6-4
MO6-4
MR6-4

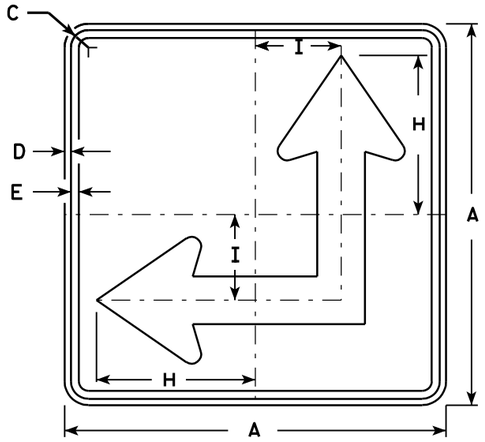

M6-6
MK6-6
MM6-6
MO6-6
MR6-6

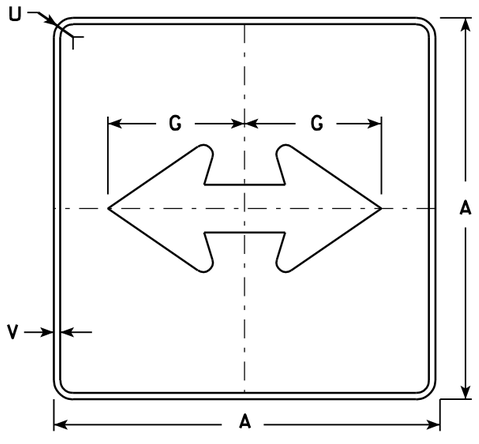

MB6-4
MG6-4
MN6-4

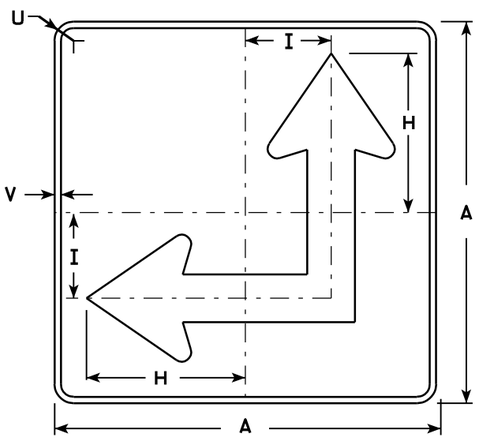

MB6-6
MG6-6
MN6-6

NOTES

1. Signs are Type II - See Note 4 - reference WIS DOT Standard Specification for HIGHWAY and STRUCTURE CONSTRUCTION latest edition.
2. Color:
   Background - See Note 4
   Message - See Note 4
3. Corners may be square or rounded when base material is plywood but borders shall be rounded as shown. When base material is metal, the corners and borders shall be rounded.
4. M6-4 and M6-6 Background - White - Type H Reflective
   (Detour or temporary Signs - Reflective)
   Message - Black
   MB6-4 and MB6-6 Background - Blue
   Message - White - Type H Reflective
   (Detour or temporary Signs - Reflective)
   MG6-4 and MG6-6 Background - Green
   Message - White - Type H Reflective
   MK6-4 and MK6-6 Background - Green
   Message - White - Type H Reflective
   MM6-4 and MM6-6 Background - White - Type H Reflective
   Message - Green
   MN6-4 and MN6-6 Background - Brown
   Message - White - Type H Reflective
   MO6-4 and MO6-6 Background - Orange - Reflective
   Message - Black
   MR6-4 and MR6-6 Background - Brown
   Message - Yellow - Type H Reflective
5. M6-6R same as M6-6L except arrow points ahead and right.

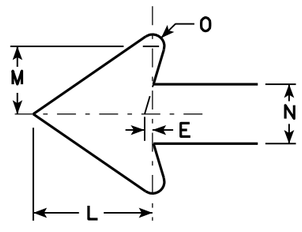

Metric equivalent for this sign is:

SIZE	
1	
2	525 mm X 525 mm
3	750 mm X 750 mm
4	750 mm X 750 mm
5	750 mm X 750 mm

SIZE	A	B	C	D	E	F	G	H	I	J	K	L	M	N	O	P	Q	R	S	T	U	V	W	X	Y	Z	Area sq. ft.	Area m2
1																												
2	21		1 1/8	3/8	3/8		7 1/2	8 3/4	4 1/4			5 1/4	3	2 5/8	1/2						1 1/2	1/2					3.06	0.28
3	30		1 3/8	1/2	5/8		10 3/4	12 1/2	6 3/4			7 1/2	4 1/4	3 3/4	3/4						1 7/8	1/2					6.25	0.56
4	30		1 3/8	1/2	5/8		10 3/4	12 1/2	6 3/4			7 1/2	4 1/4	3 3/4	3/4						1 7/8	1/2					6.25	0.56
5	30		1 3/8	1/2	5/8		10 3/4	12 1/2	6 3/4			7 1/2	4 1/4	3 3/4	3/4						1 7/8	1/2					6.25	0.56

STANDARD SIGN M6-4 & M6-6 SERIES

WISCONSIN DEPT OF TRANSPORTATION

APPROVED Matthew R Rauch for State Traffic Engineer

DATE 3/16/10 PLATE NO. M6-4.7

PROJECT NO:	HWY:	COUNTY:		SHEET NO: 179	E

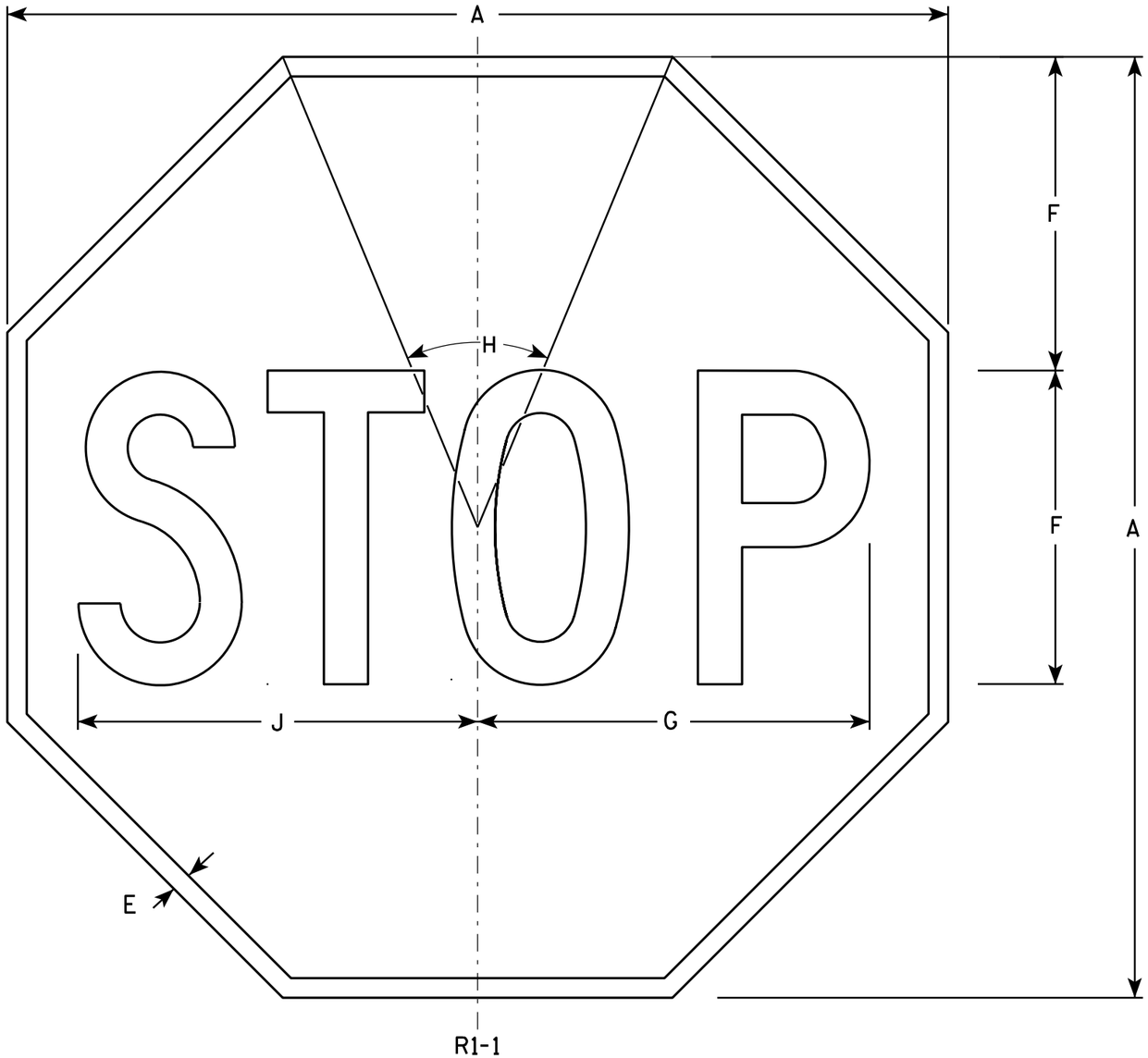

NOTES

1. Sign is Type II - Type H Reflective - reference WIS DOT Standard Specification for HIGHWAY and STRUCTURE CONSTRUCTION latest edition.
2. Color:
   Background - Red
   Message - White
3. Message Series - C

SIZE	A	B	C	D	E	F	G	H	I	J	K	L	M	N	O	P	Q	R	S	T	U	V	W	X	Y	Z	Area sq. ft.
1	24				3/8	8	10	45°		10 1/4																	3.31
2S	30				5/8	10	12 1/2	45°		12 3/4																	5.18
2M	36				3/4	12	15	45°		15 3/8																	7.46
3	36				3/4	12	15	45°		15 3/8																	7.46
4	48				1	16	20	45°		20 1/2																	13.25
5	48				1	16	20	45°		20 1/2																	13.25
6	18				3/8	6	7 3/4	45°		7 3/4																	1.86
7	12				1/4	4	5	45°		5 1/8																	0.78

STANDARD SIGN
R1-1

WISCONSIN DEPT OF TRANSPORTATION

APPROVED Matthew R Rauch
for State Traffic Engineer

DATE 12/03/10 PLATE NO. R1-1.12

PROJECT NO:	HWY:	COUNTY:		SHEET NO: 180	E

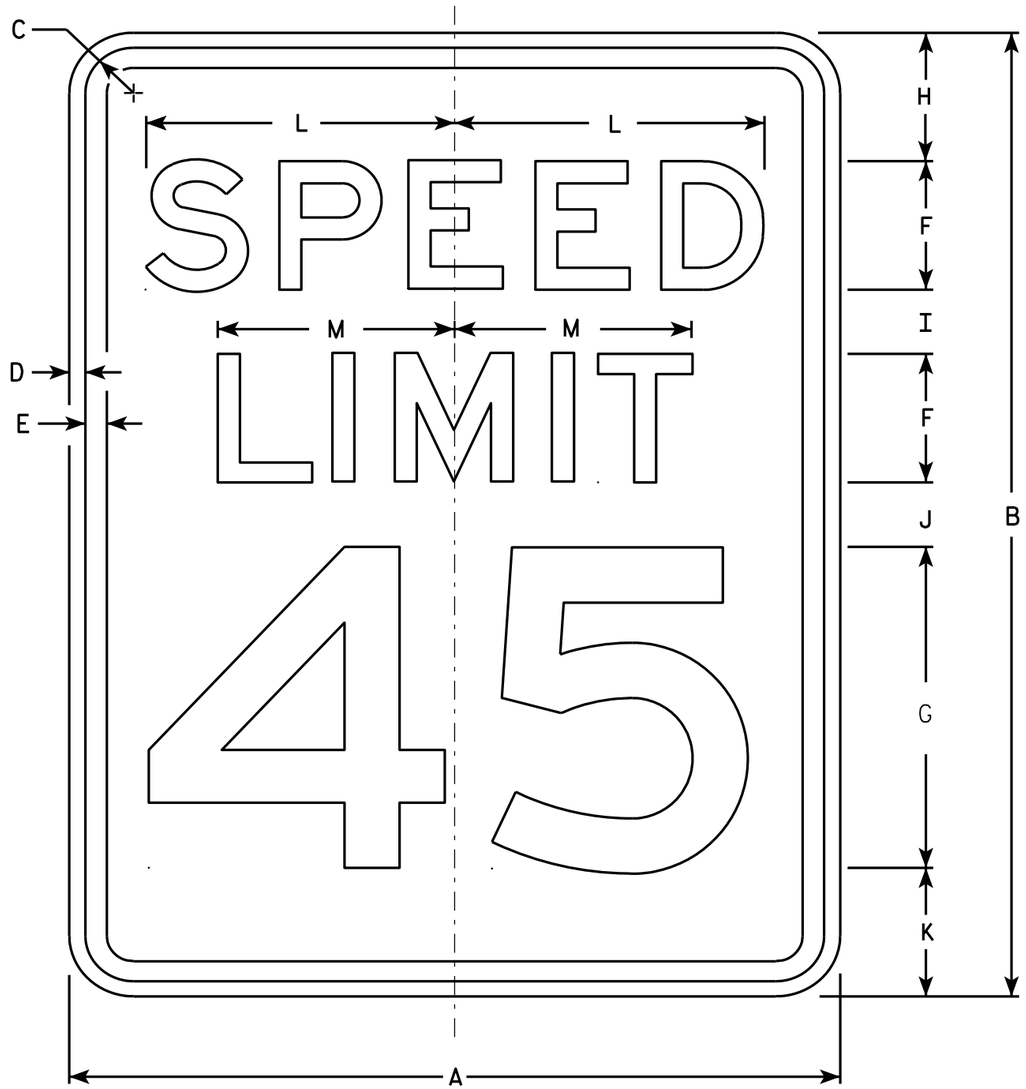

R2-1

NOTES

1. Sign is Type II - Type H Reflective - reference WIS DOT Standard Specification for HIGHWAY and STRUCTURE CONSTRUCTION latest edition.
2. Color:
   Background - White
   Message - Black
3. Message Series - E
4. Corners may be square or rounded when base material is plywood but borders shall be rounded as shown. When base material is metal, the corners and borders shall be rounded.
5. Substitute appropriate numerals and optically adjust spacing to achieve proper balance.

SIZE	A	B	C	D	E	F	G	H	I	J	K	L	M	N	O	P	Q	R	S	T	U	V	W	X	Y	Z	Area sq. ft.
1	18	24	1 1/8	3/8	1/2	3	8	3	2	2	3	7 1/4	5 1/2														3.0
2S	24	30	1 1/8	3/8	1/2	4	10	3	2 1/4	3 3/8	3 3/8	9 5/8	7 3/8														5.0
2M	30	36	1 3/8	1/2	5/8	5	12	5	2 1/2	2 1/2	4	12	9 1/4														7.5
3	36	48	1 3/8	1/2	5/8	6	14	6	5	5	6	14 3/8	11														12.0
4	36	48	1 3/8	1/2	5/8	6	14	6	5	5	6	14 3/8	11														12.0
5	48	60	2 1/4	3/4	1	8	20	6	4 1/2	6 3/4	6 3/4	19 1/4	14 5/8														20.0

STANDARD SIGN
R2-1

WISCONSIN DEPT OF TRANSPORTATION

APPROVED Matthew R Rauch
for State Traffic Engineer

DATE 5/26/10 PLATE NO. R2-1.13

PROJECT NO:	HWY:	COUNTY:		SHEET NO: 181	E

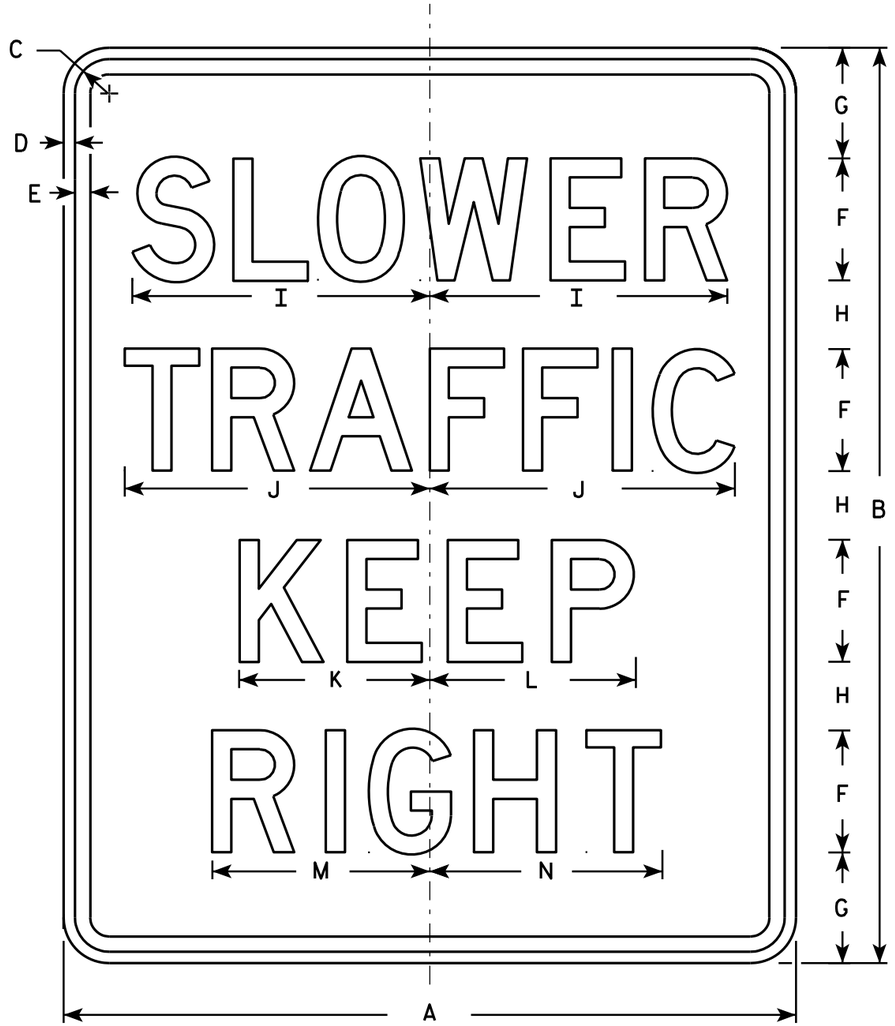

R4-3

NOTES

1. Sign is Type II - Type H Reflective - reference WIS DOT Standard Specification for HIGHWAY and STRUCTURE CONSTRUCTION latest edition.
2. Color:
   Background - White
   Message - Black
3. Message Series - D
4. Corners may be square or rounded when base material is plywood but borders shall be rounded as shown. When base material is metal, the corners and borders shall be rounded.

SIZE	A	B	C	D	E	F	G	H	I	J	K	L	M	N	O	P	Q	R	S	T	U	V	W	X	Y	Z	Area sq. ft.
1																											
2S	24	30	1 1/8	3/8	1/2	4	3 5/8	2 1/4	9 3/4	10	6 1/4	6 3/4	7 1/8	7 5/8													5.0
2M	24	30	1 1/8	3/8	1/2	4	3 5/8	2 1/4	9 3/4	10	6 1/4	6 3/4	7 1/8	7 5/8													5.0
3	36	48	1 5/8	5/8	3/4	6	6	4	14 5/8	15	9 3/8	10	10 3/4	11 3/8													12.0
4	36	48	1 5/8	5/8	3/4	6	6	4	14 5/8	15	9 3/8	10	10 3/4	11 3/8													12.0
5	48	60	2 1/4	3/4	1	8	7 1/4	4 1/2	19 1/2	20	12 1/2	13 1/2	14 1/4	15 1/4													20.0

STANDARD SIGN
R4-3

WISCONSIN DEPT OF TRANSPORTATION

APPROVED Matthew R Rauch
for State Traffic Engineer

DATE 3/25/2011 PLATE NO. R4-3.8

PROJECT NO:

SHEET NO: 182 E

FILE NAME : C:\Users\PROJECTS\tr_stdplate\R43.DGN PLOT DATE : 25-MAR-2011 13:40 PLOT BY : mscsja

WISDOT/CADDS SHEET 42

7

7

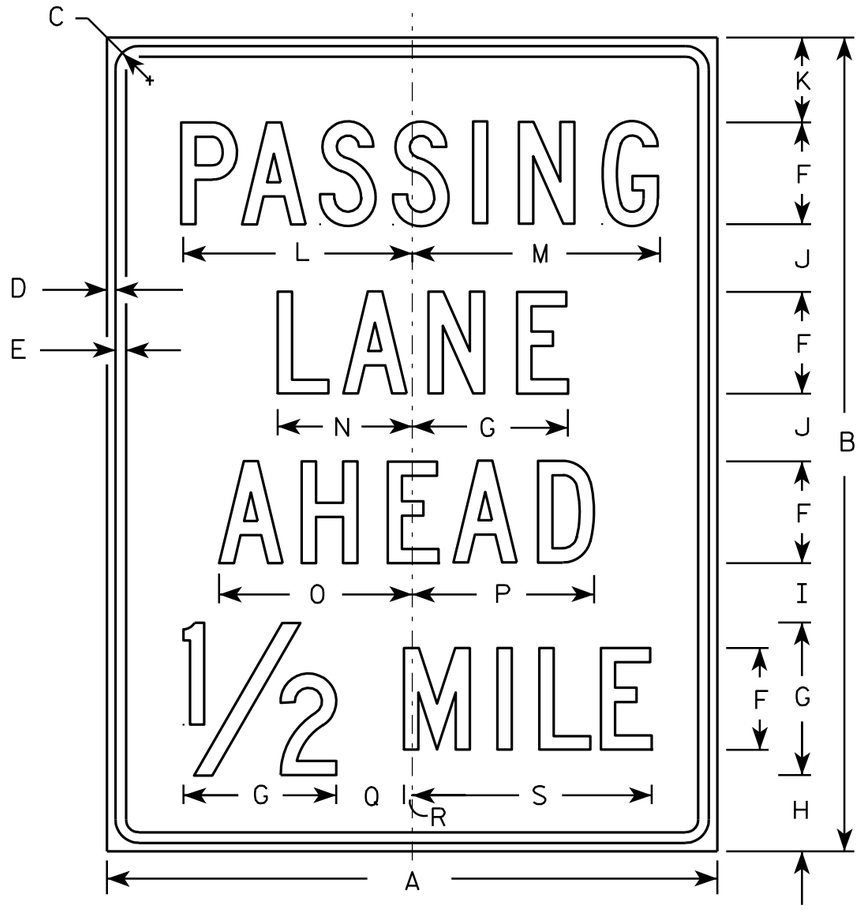

R4-51

NOTES

1. Sign is Type II - Type H Reflective - reference WIS DOT Standard Specification for HIGHWAY and STRUCTURE CONSTRUCTION latest edition.
2. Color:
   Background - White
   Message - Black
3. Message Series - C
4. Corners may be square or rounded when base material is plywood but borders shall be rounded as shown. When base material is metal, the corners and borders shall be rounded.

SIZE	A	B	C	D	E	F	G	H	I	J	K	L	M	N	O	P	Q	R	S	T	U	V	W	X	Y	Z	Area sq. ft.
1																											
2S	36	48	1 3/8	1/2	5/8	6	9	4 1/2	3 1/2	4	5	13 5/8	14 1/2	8	11 3/8	10 3/4	4	1/2	14 1/8								12.0
2M	36	48	1 3/8	1/2	5/8	6	9	4 1/2	3 1/2	4	5	13 5/8	14 1/2	8	11 3/8	10 3/4	4	1/2	14 1/8								12.0
3																											
4																											
5																											

STANDARD SIGN
R4-51

WISCONSIN DEPT OF TRANSPORTATION

APPROVED Matthew R Rauch
for State Traffic Engineer

DATE 3/29/2011 PLATE NO. R4-51.4

PROJECT NO: | HWY: | COUNTY: | SHEET NO: 183 | E

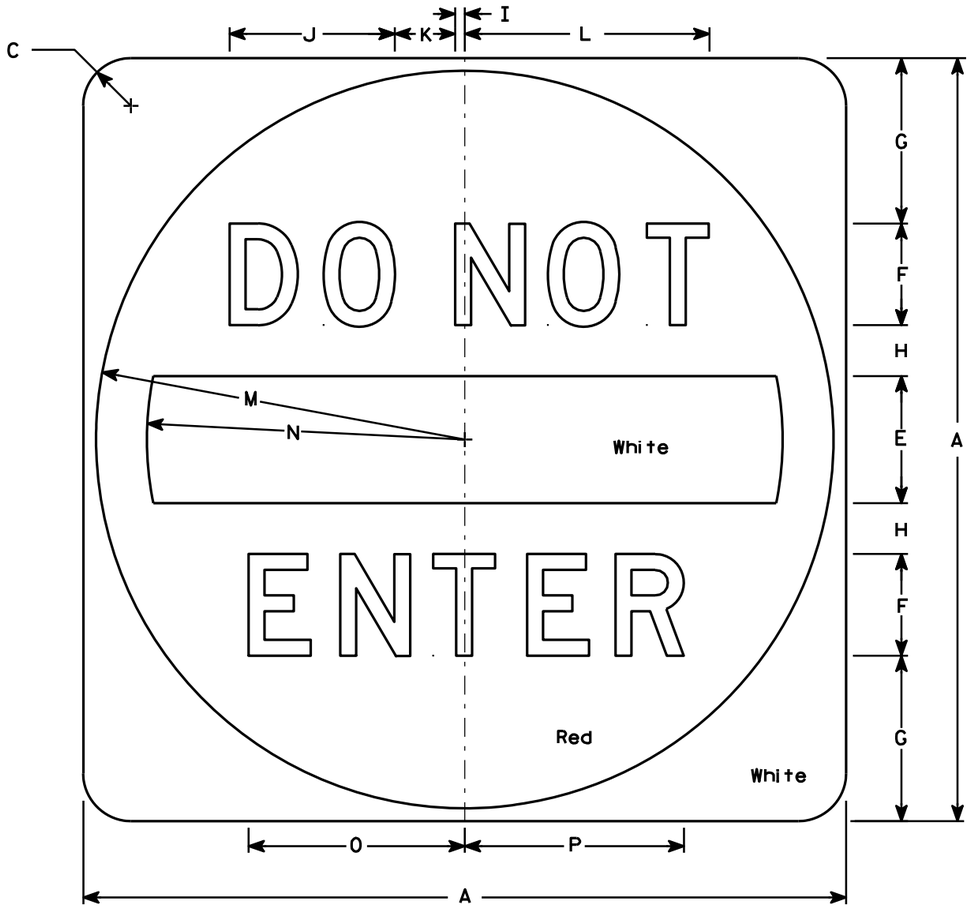

R5-1

NOTES

1. Sign is Type II - Type H Reflective - reference WIS DOT Standard Specification for HIGHWAY and STRUCTURE CONSTRUCTION latest edition.
2. Color:
   Background - See detail
   Message - White - Type H Reflective
3. Message Series - D
4. Corners may be square or rounded when base material is plywood but when base material is metal, the cornors shall be rounded.

SIZE	A	B	C	D	E	F	G	H	I	J	K	L	M	N	O	P	Q	R	S	T	U	V	W	X	Y	Z	Area sq. ft.
1																											
2S	30		1 7/8		5	4	6 1/2	2	3/8	6 1/2	2 3/8	9 5/8	14 1/2	12 1/2	8 1/2	8 5/8											6.26
2M	36		2 1/4		6	5	7 1/2	2 1/2	1/2	8 1/8	3	12 1/8	17 1/2	15	10 5/8	10 3/4											9.0
3	36		2 1/4		6	5	7 1/2	2 1/2	1/2	8 1/8	3	12 1/8	17 1/2	15	10 5/8	10 3/4											9.0
4	36		2 1/4		6	5	7 1/2	2 1/2	1/2	8 1/8	3	12 1/8	17 1/2	15	10 5/8	10 3/4											9.0
5	48		3		8	6	11	3	5/8	9 3/4	3 5/8	14 1/2	23 1/2	20	12 3/4	12 7/8											16.0

STANDARD SIGN
R5-1

WISCONSIN DEPT OF TRANSPORTATION

APPROVED Matthew R Rauch
for State Traffic Engineer

DATE 12/17/10 PLATE NO. R5-1.15

PROJECT NO: | HWY: | COUNTY: | SHEET NO: 184 | E

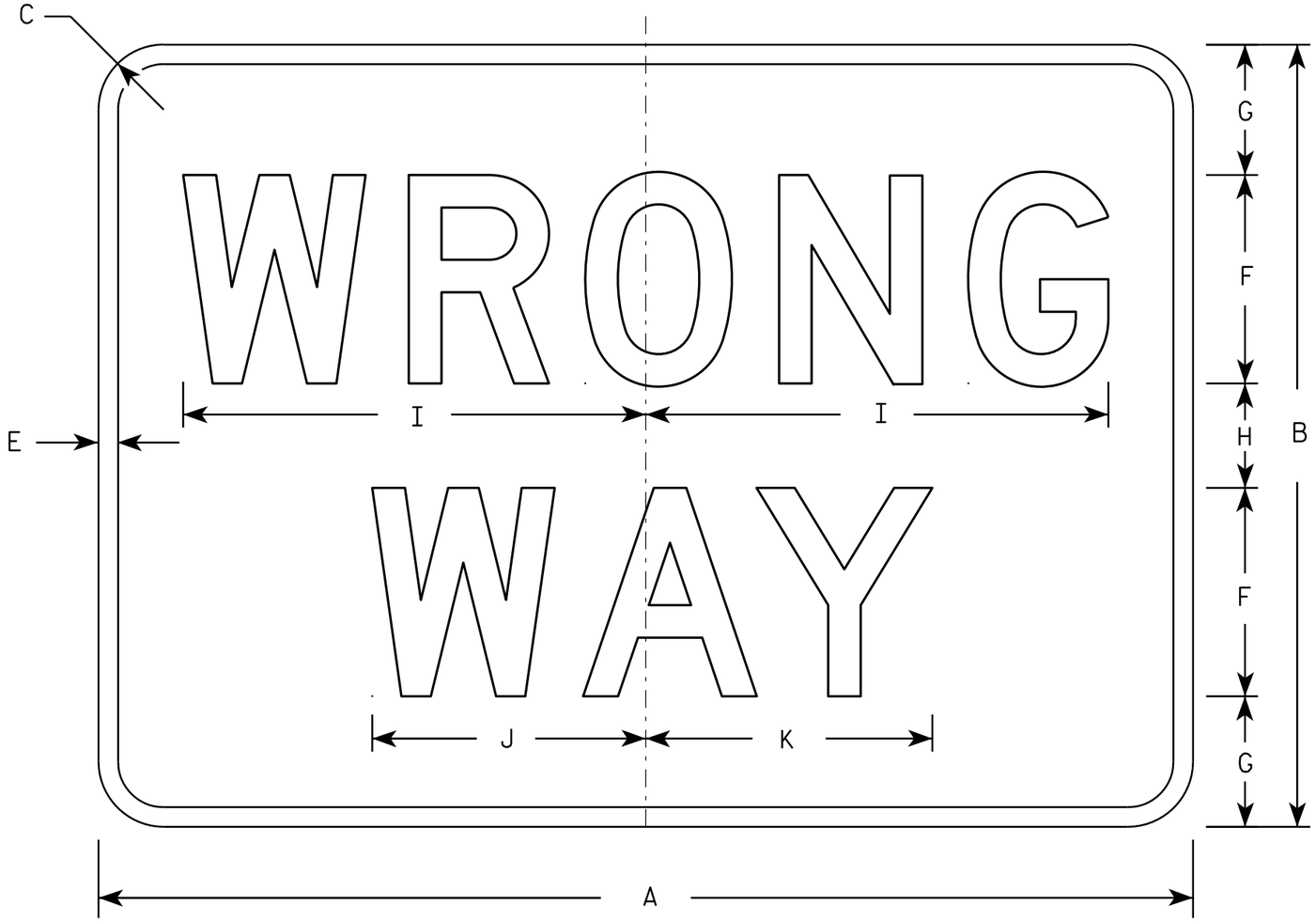

R5-1A

NOTES

1. Sign is Type II - Type H Reflective - reference WIS DOT Standard Specification for HIGHWAY and STRUCTURE CONSTRUCTION latest edition.
2. Color:
   Background - Red
   Message - White
3. Message Series - D
4. Corners may be square or rounded when base material is plywood but borders shall be rounded as shown. When base material is metal, the corners and borders shall be rounded.

SIZE	A	B	C	D	E	F	G	H	I	J	K	L	M	N	O	P	Q	R	S	T	U	V	W	X	Y	Z	Area sq. ft.
1	30	18	1 1/2		1/2	5	3	2	11	6 1/2	6 7/8																3.75
2S	36	24	2		5/8	6	4 1/2	3	13 1/4	7 7/8	8 1/4																6.00
2M	42	30	2 1/2		3/4	8	5	4	17 3/4	10 1/2	11																8.75
3	42	30	2 1/2		3/4	8	5	4	17 3/4	10 1/2	11																8.75
4	42	30	2 1/2		3/4	8	5	4	17 3/4	10 1/2	11																8.75
5	42	30	2 1/2		3/4	8	5	4	17 3/4	10 1/2	11																8.75

STANDARD SIGN
R5-1A

WISCONSIN DEPT OF TRANSPORTATION

APPROVED Matthew R Rauch
for State Traffic Engineer

DATE 12/17/10 PLATE NO. R5-1A.2

PROJECT NO:	HWY:	COUNTY:		SHEET NO: 185	E

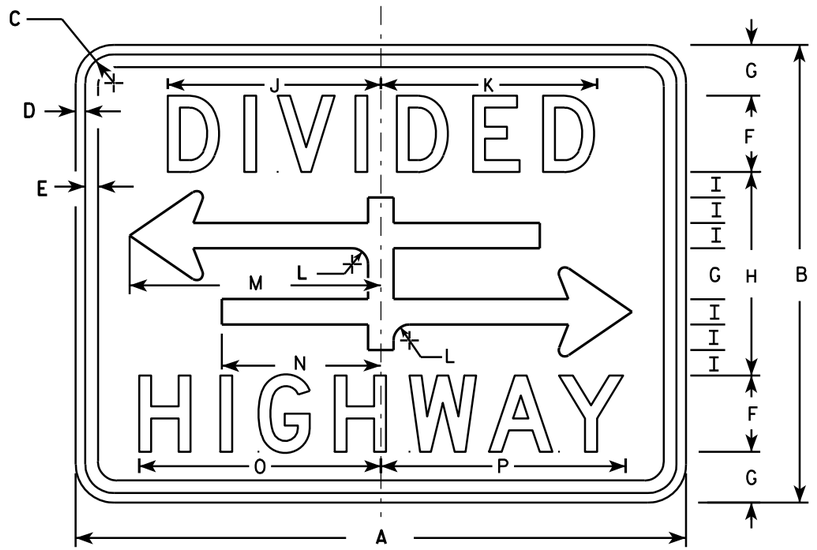

R6-3

NOTES

1. Sign is Type II - Type H Reflective - reference WIS DOT Standard Specification for HIGHWAY and STRUCTURE CONSTRUCTION latest edition.
2. Color:
   Background - White
   Message - Black
3. Message Series - D
4. Corners may be square or rounded when base material is plywood but borders shall be rounded as shown. When base material is metal, the corners and borders shall be rounded.

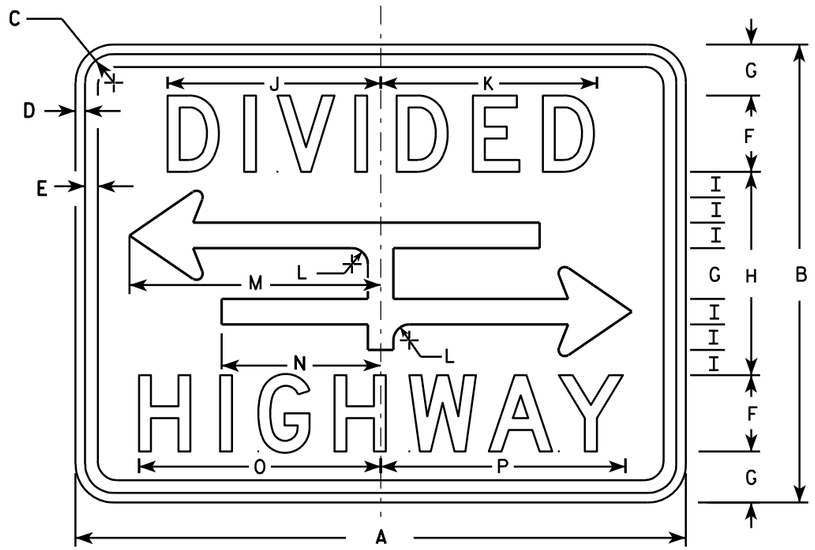

R6-3A

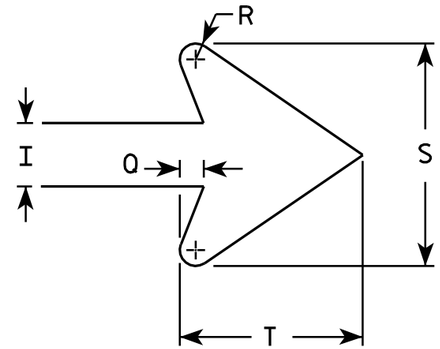

ARROW DETAIL

SIZE	A	B	C	D	E	F	G	H	I	J	K	L	M	N	O	P	Q	R	S	T	U	V	W	X	Y	Z	Area sq. ft.
1	24	18	1 1/8	3/8	3/8	3	2	8	1	8 3/8	8 1/2	5/8	9 7/8	6 1/4	9 1/2	9 5/8	3/8	1/4	3 1/2	2 3/4							3.0
2S	30	24	1 1/8	3/8	1/2	4	2 5/8	10 3/4	1 3/8	10 1/2	10 5/8	7/8	12 1/2	7 7/8	12 1/4	12 3/8	1/2	3/8	4 5/8	3 5/8							5.0
2M	30	24	1 1/8	3/8	1/2	4	2 5/8	10 3/4	1 3/8	10 1/2	10 5/8	7/8	12 1/2	7 7/8	12 1/4	12 3/8	1/2	3/8	4 5/8	3 5/8							5.0
3																											
4																											
5																											

STANDARD SIGN
R6-3 & R6-3A

WISCONSIN DEPT OF TRANSPORTATION

APPROVED Matthew R Rauch
for State Traffic Engineer

DATE 3/31/2011 PLATE NO. R6-3.5

PROJECT NO:

SHEET NO: 186 E

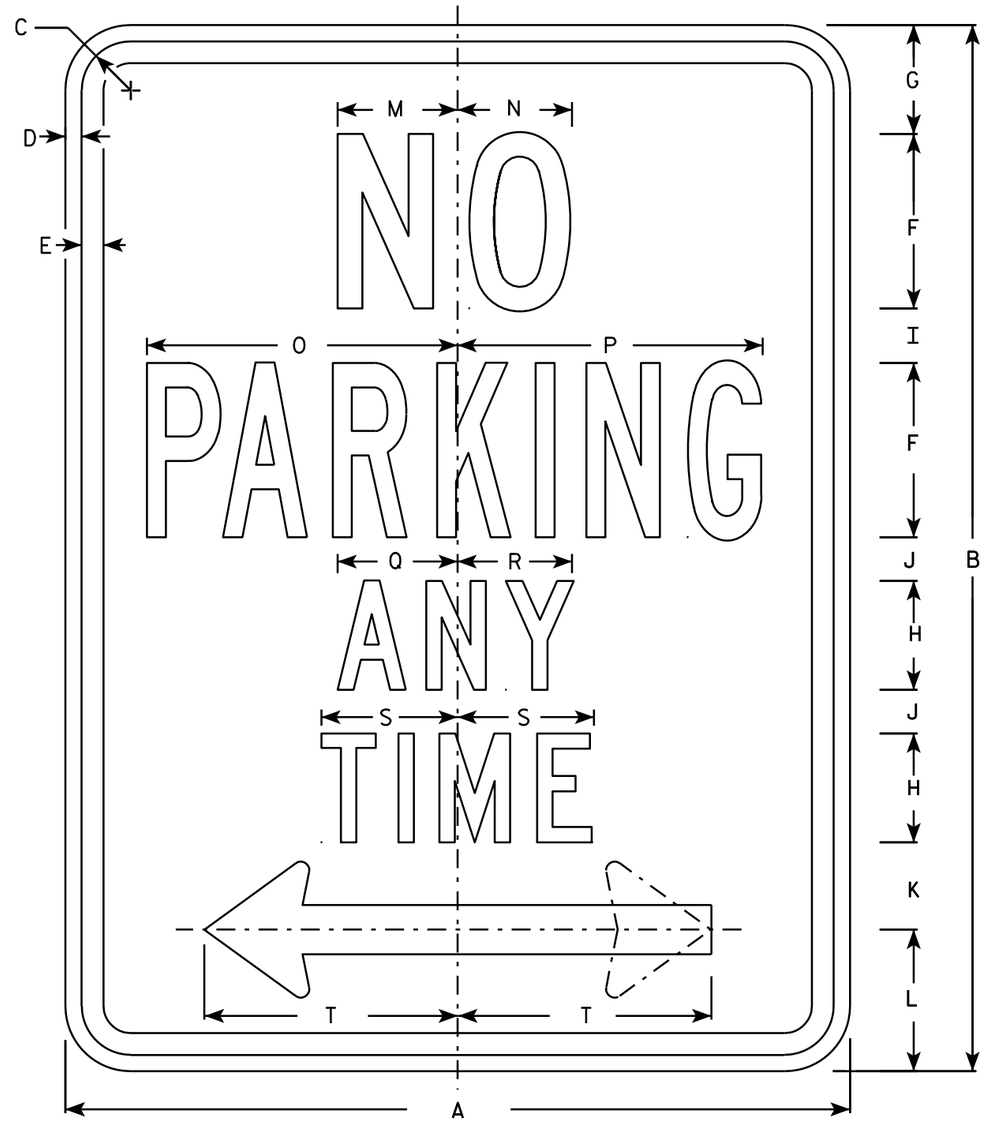

R7-1

NOTES

1. Sign is Type II - Type H Reflective - reference WIS DOT Standard Specification for HIGHWAY and STRUCTURE CONSTRUCTION latest edition.
2. Color:
   Background - White
   Message - Red
3. Message Series - See Note 5
4. Corners may be square or rounded when base material is plywood but borders shall be rounded as shown. When base material is metal, the corners and borders shall be rounded.
5. Lines 1, 3 and 4 are series C, line 2 is series B.
6. R7-1D (double arrow)
   R7-1L (left arrow)
   R7-1R (right arrow)

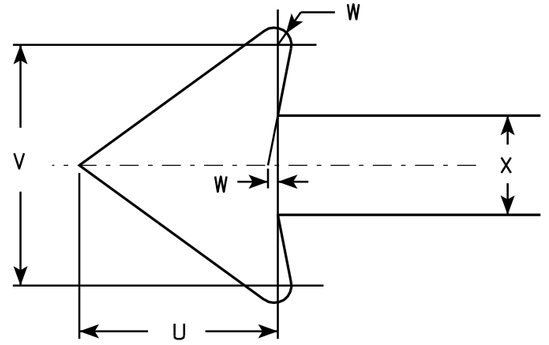

SIZE	A	B	C	D	E	F	G	H	I	J	K	L	M	N	O	P	Q	R	S	T	U	V	W	X	Y	Z	Area sq. ft.
1	12	18	1 1/8	3/8	3/8	3	1 7/8	2	7/8	5/8	1 1/2	2 1/2	2	2	4 7/8	4 7/8	2 1/4	2 1/8	2 1/2	3 7/8	1 1/2	1 3/4	1/8	3/4			1.5
2S	18	24	1 1/8	3/8	1/2	4	2 1/2	2 1/2	1 1/4	1	2	3 1/4	2 3/4	2 5/8	7 1/8	7	2 3/4	2 5/8	3 1/8	5 7/8	2 1/4	2 5/8	1/4	1 1/8			3.0
2M	24	30	1 1/8	3/8	1/2	5	3	3	2	1 1/4	2 1/2	4	3 1/4	3 3/8	9 1/4	9 1/4	3 1/4	3 1/4	3 3/4	7 3/4	3	3 1/2	1/4	1 1/2			5.0
3	24	30	1 1/8	3/8	1/2	5	3	3	2	1 1/4	2 1/2	4	3 1/4	3 3/8	9 1/4	9 1/4	3 1/4	3 1/4	3 3/4	7 3/4	3	3 1/2	1/4	1 1/2			5.0
4																											
5																											

STANDARD SIGN
R7-1

WISCONSIN DEPT OF TRANSPORTATION

APPROVED Matthew R Rauch
for State Traffic Engineer

DATE 3/31/2011 PLATE NO. R7-1.9

PROJECT NO: | HWY: | COUNTY: | SHEET NO: 187 | E

FILE NAME : C:\Users\PROJECTS\tr_stdplate\R71.DGN PLOT DATE : 31-MAR-2011 09:20 PLOT BY : mscsja PLOT NAME : PLOT SCALE : 3.476110:1.000000

WISDOT/CADDS SHEET 42

NOTES

1. Sign is Type II - Type F Reflective - reference WIS DOT Standard Specification for HIGHWAY and STRUCTURE CONSTRUCTION latest edition.
2. Color:
   Background - Yellow
   Message - Black
3. Corners may be square or rounded when base material is plywood but borders shall be rounded as shown. When base material is metal, the corners and borders shall be rounded.
4. W1-2L is the same as W1-2R except the arrow is reversed along the vertical centerline.

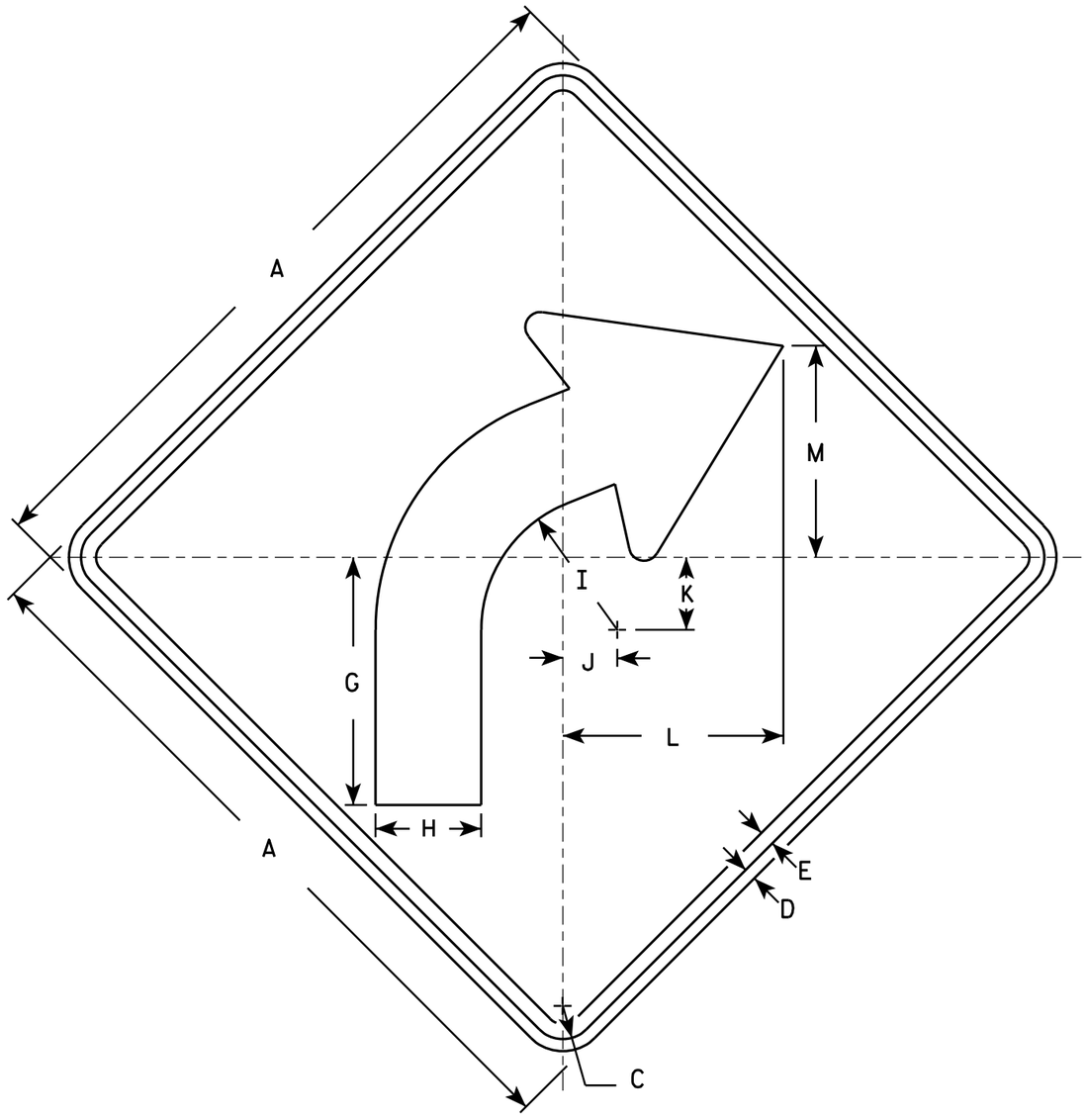

W1-2R

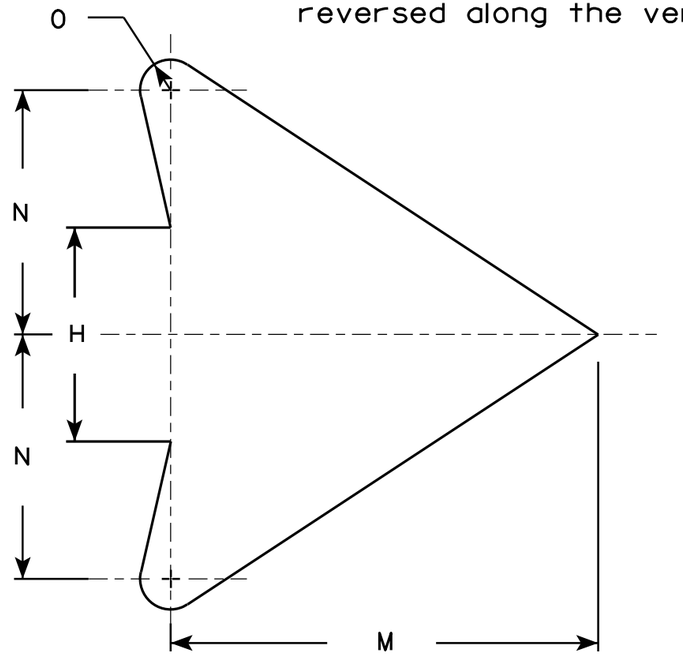

ARROW DETAIL

SIZE	A	B	C	D	E	F	G	H	I	J	K	L	M	N	O	P	Q	R	S	T	U	V	W	X	Y	Z	Area sq. ft.
1	24		1 1/8	3/8	1/2		8 1/4	3 1/2	4 1/2	1 3/4	2 3/8	7 1/4	7	4	1/2												4.0
2S	30		1 3/8	1/2	5/8		10 1/4	4 3/8	5 5/8	2 1/4	3	9 1/8	8 3/4	5	5/8												6.25
2M	36		1 5/8	5/8	3/4		12 3/8	5 1/4	6 3/4	2 5/8	3 1/2	10 7/8	10 1/2	6	3/4												9.0
3	36		1 5/8	5/8	3/4		12 3/8	5 1/4	6 3/4	2 5/8	3 1/2	10 7/8	10 1/2	6	3/4												9.0
4	36		1 5/8	5/8	3/4		12 3/8	5 1/4	6 3/4	2 5/8	3 1/2	10 7/8	10 1/2	6	3/4												9.0
5	48		2 1/4	3/4	1		16 1/2	7	9	3 1/2	4 5/8	14 1/2	14	8	1												16.0

STANDARD SIGN
W1-2

WISCONSIN DEPT OF TRANSPORTATION

APPROVED Matthew R Rauch
for State Traffic Engineer

DATE 5/15/12 PLATE NO. W1-2.10

PROJECT NO:	HWY:	COUNTY:		SHEET NO: 188	E

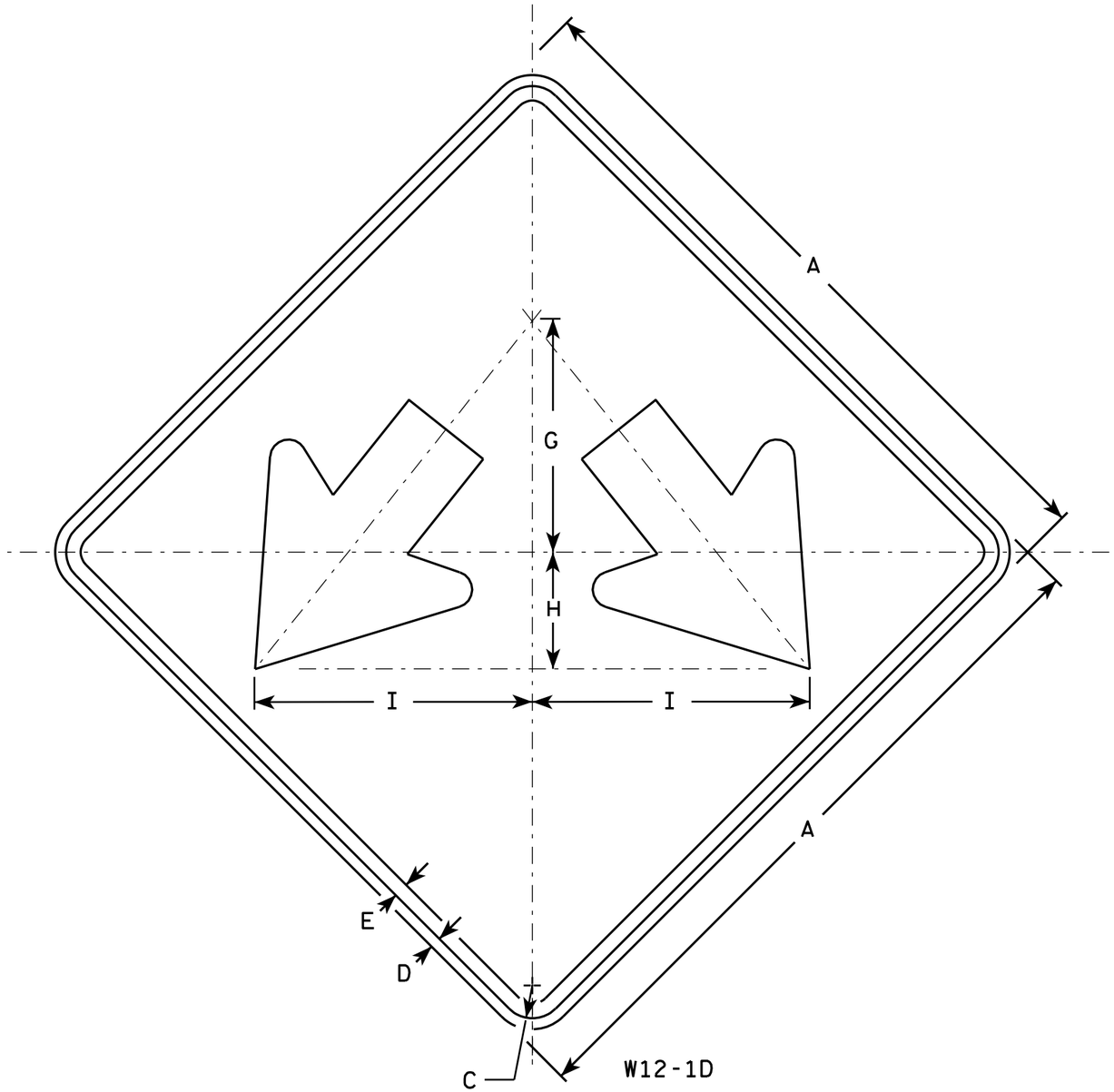

NOTES

1. Sign is Type II - Type F Reflective - reference WIS DOT Standard Specification for HIGHWAY and STRUCTURE CONSTRUCTION latest edition.
2. Color:
   Background - Yellow
   Message - Black
3. Corners may be square or rounded when base material is plywood but borders shall be rounded as shown. When base material is metal, the corners and borders shall be rounded.

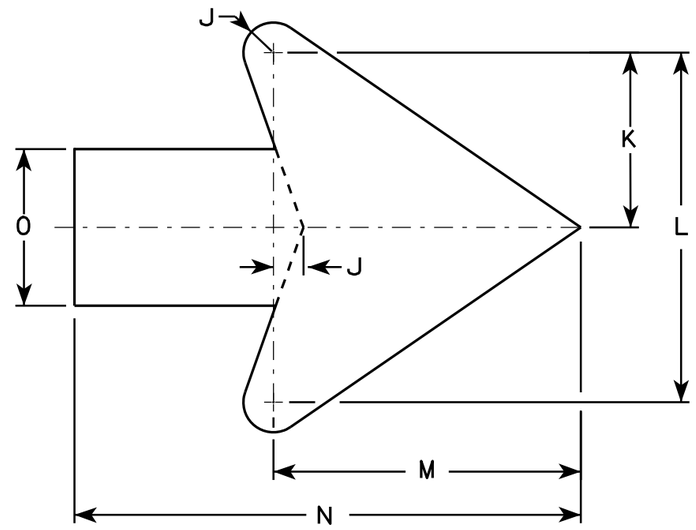

Arrow Detail

SIZE	A	B	C	D	E	F	G	H	I	J	K	L	M	N	O	P	Q	R	S	T	U	V	W	X	Y	Z	Area sq. ft.
1																											
2S	24		1 1/8	1/2	3/8		8	4	9 1/2	3/8	3 3/8	7 1/4	6 3/8	10 3/8	3 1/4												4.0
2M	24		1 1/8	1/2	3/8		8	4	9 1/2	3/8	3 3/8	7 1/4	6 3/8	10 3/8	3 1/4												4.0
3	30		1 3/8	1/2	5/8		10	5	11 7/8	3/4	4 1/2	9	7 7/8	13	4												6.25
4	36		1 3/8	1/2	5/8		12	6	14 1/4	1	5 1/2	10 7/8	9 5/8	15 3/4	4 3/4												9.0
5	48		2 1/4	3/4	1		16	8	19	1 1/4	7 1/4	14 1/2	12 3/4	21	6 1/4												16.0

STANDARD SIGN
W12-1D

WISCONSIN DEPT OF TRANSPORTATION

APPROVED Matthew R Rauch
for State Traffic Engineer

DATE 3/13/13 PLATE NO. W12-1D.15

PROJECT NO:	HWY:	COUNTY:		SHEET NO: 189	E

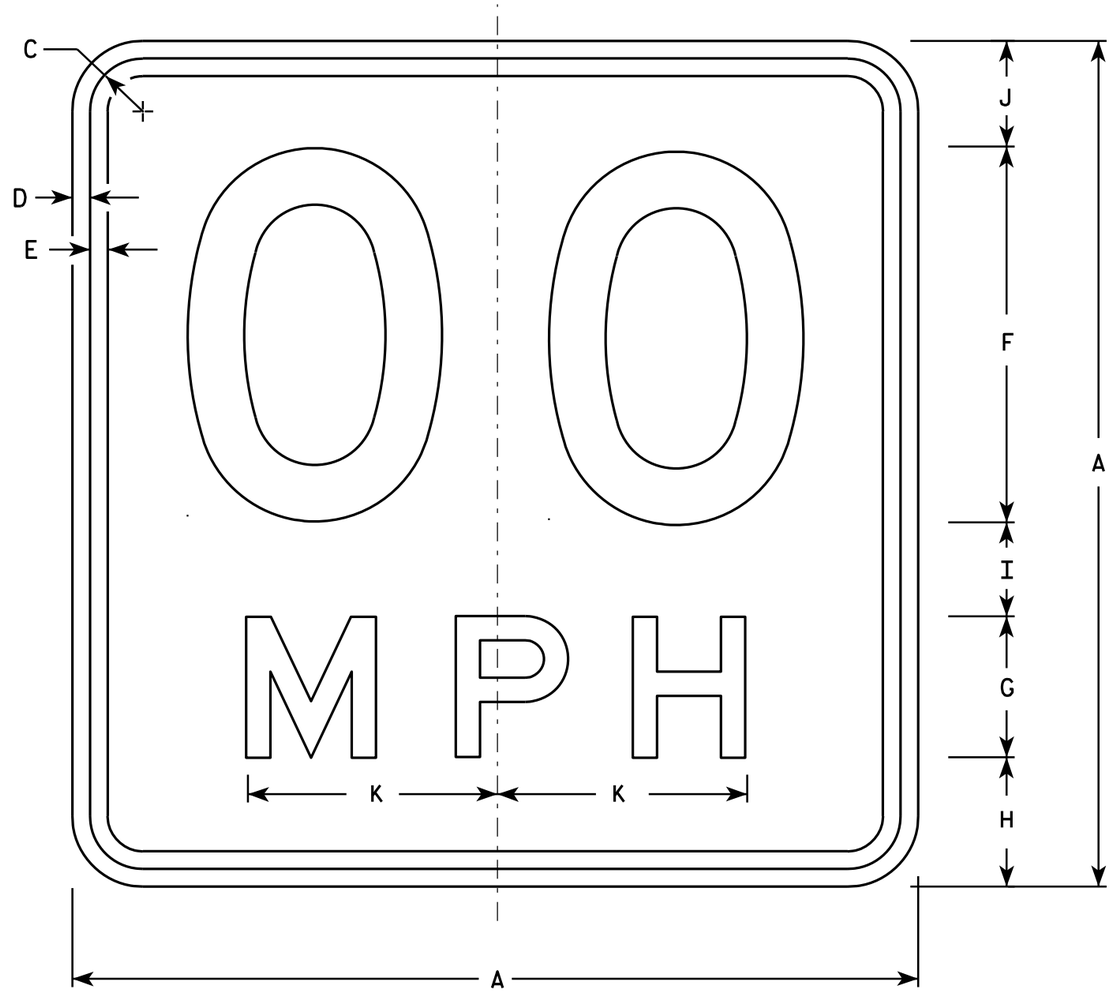

W13-1

* For 30" x 30" Warning Signs, use 18" x 18" W13-1 signs.
For 36" x 36" Warning Signs, use 24" x 24" W13-1 signs.

NOTES

1. Sign is Type II - Type F Reflective - reference WIS DOT Standard Specification for HIGHWAY and STRUCTURE CONSTRUCTION latest edition.
2. Color:
   Background - Yellow
   Message - Black
3. Message Series - See Note 6
4. Corners may be square or rounded when base material is plywood but borders shall be rounded as shown. When base material is metal, the corners and borders shall be rounded.
5. Substitute appropriate numerals and optically space about centerline to achieve proper balance.
6. Line 1 is Series D
   Line 2 is Series E

	SIZE	A	B	C	D	E	F	G	H	I	J	K	L	M	N	O	P	Q	R	S	T	U	V	W	X	Y	Z	Area sq. ft.
	1	18		1 1/8	3/8	3/8	8	3	2 3/4	2	2 1/4	5 3/8																2.25
*	2S	18		1 1/8	3/8	3/8	8	3	2 3/4	2	2 1/4	5 3/8																2.25
*	2M	18		1 1/8	3/8	3/8	8	3	2 3/4	2	2 1/4	5 3/8																2.25
	3	24		1 1/8	3/8	1/2	10	4	4	2 3/4	3 1/4	6 5/8																4.00
	4	36		1 5/8	5/8	3/4	16	6	5 1/2	4	4 1/2	10 5/8																9.00
	5	36		1 5/8	5/8	3/4	16	6	5 1/2	4	4 1/2	10 5/8																9.00

STANDARD SIGN
W13-1

WISCONSIN DEPT OF TRANSPORTATION

APPROVED Matthew R Rauch
For State Traffic Engineer

DATE 5/31/12 PLATE NO. W13-1.16

PROJECT NO: | HWY: | COUNTY: | SHEET NO: 190 | E

NOTES

1. Sign is Type II - Type F Reflective - reference WIS DOT Standard Specification for HIGHWAY and STRUCTURE CONSTRUCTION latest edition.
2. Color:
   Background - Yellow
   Message - Black
3. Message Series - See note 5
4. Corners and borders shall be rounded on all base materials for this sign.
5. Lines 1 and 2 are Series D.
   Line 3 is series C.

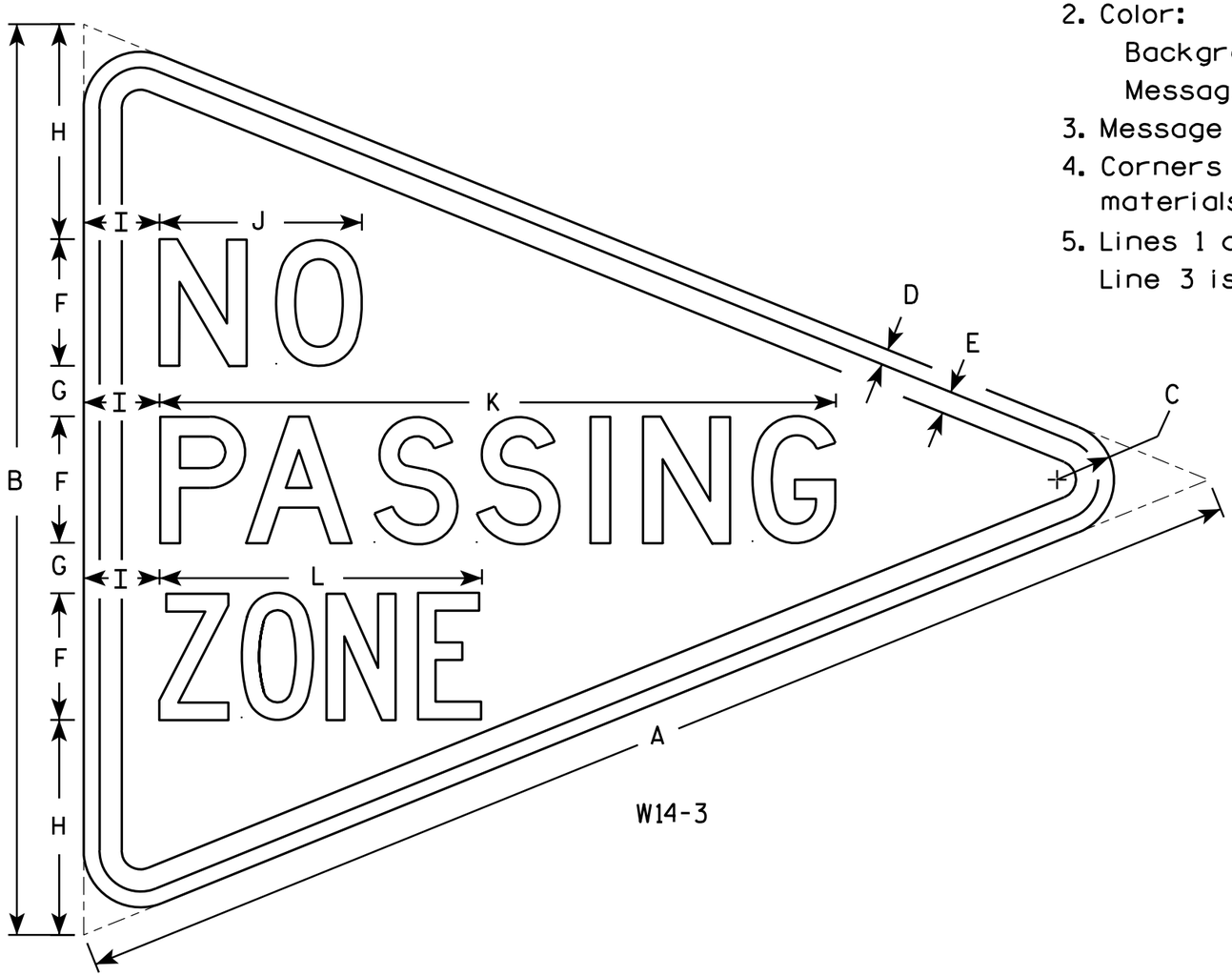

W14-3

SIZE	A	B	C	D	E	F	G	H	I	J	K	L	M	N	O	P	O	R	S	T	U	V	W	X	Y	Z	Area sq. ft.
1																											
2S	48	36	2 1/4	5/8	7/8	5	2	8 1/2	3	8	26 3/4	12 3/4															6.0
2M	48	36	2 1/4	5/8	7/8	5	2	8 1/2	3	8	26 3/4	12 3/4															6.0
3	64	48	3	3/4	1 1/4	6	3	12	4	10 3/4	33 5/8	16 1/2															10.7
4																											
5																											

STANDARD SIGN
W14-3

WISCONSIN DEPT OF TRANSPORTATION

APPROVED Matthew R Rauch
for State Traffic Engineer

DATE 6/7/10 PLATE NO. W14-3.9

PROJECT NO:	HWY:	COUNTY:		SHEET NO: 191	E

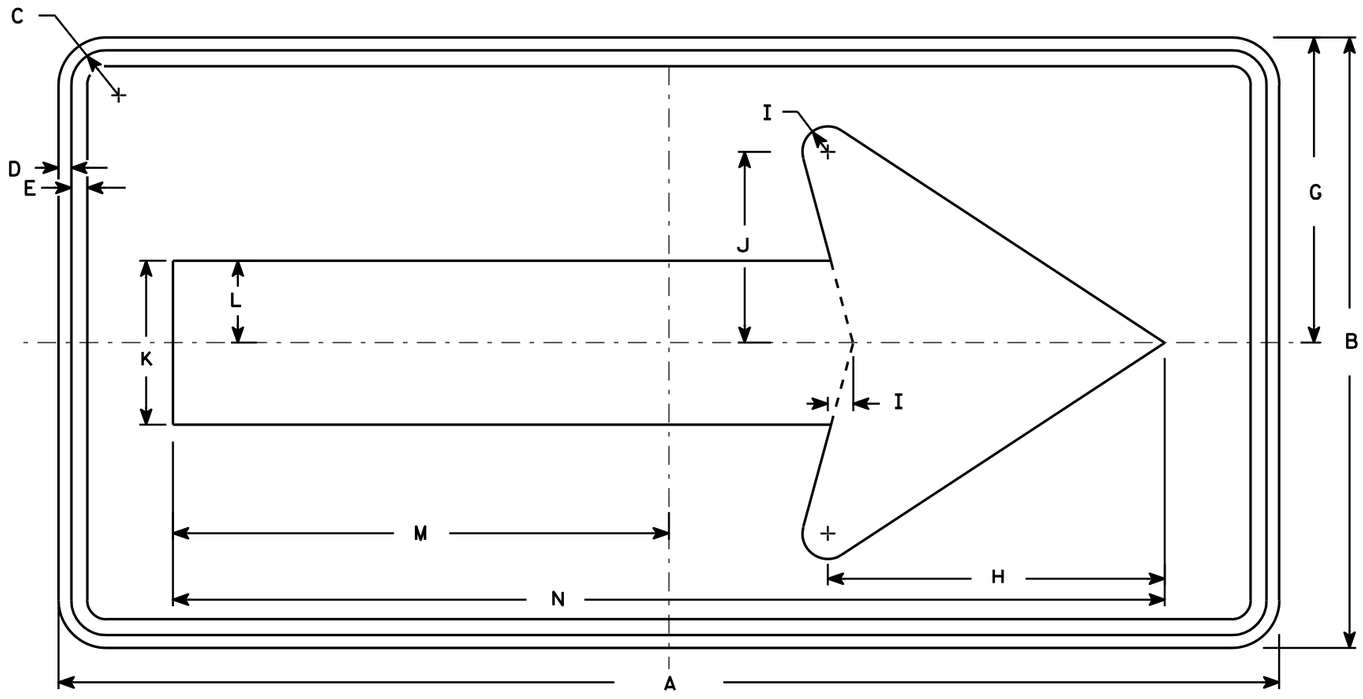

W1-6

NOTES

1. Sign is Type II - Type F Reflective - reference WIS DOT Standard Specification for HIGHWAY and STRUCTURE CONSTRUCTION latest edition.
2. Color:
   Background - Yellow
   Message - Black
3. Corners may be square or rounded when base material is plywood but borders shall be rounded as shown. When base material is metal, the corners and borders shall be rounded.

SIZE	A	B	C	D	E	F	G	H	I	J	K	L	M	N	O	P	Q	R	S	T	U	V	W	X	Y	Z	Area sq. ft.
1	36	18	1 1/8	3/8	3/8		9	10	3/4	5 5/8	4 3/4	2 3/8	14 5/8	29 1/4													4.5
2S	48	24	1 3/8	1/2	5/8		12	13 1/4	1	7 1/2	6 1/2	3 1/4	19 1/2	39													8.0
2M	48	24	1 3/8	1/2	5/8		12	13 1/4	1	7 1/2	6 1/2	3 1/4	19 1/2	39													8.0
3	60	30	1 3/8	1/2	5/8		15	16 1/4	1 1/4	9 1/4	8	4	24 3/8	48 3/4													12.5
4	60	30	1 3/8	1/2	5/8		15	16 1/4	1 1/4	9 1/4	8	4	24 3/8	48 3/4													12.5
5	96	48	2 1/4	3/4	1		24	26 1/2	2	15	13	6 1/2	39	78													32.0

STANDARD SIGN
W1-6

WISCONSIN DEPT OF TRANSPORTATION

APPROVED Matthew R Rauch
for State Traffic Engineer

DATE 6/7/10 PLATE NO. W1-6.8

PROJECT NO:	HWY:	COUNTY:		SHEET NO: 192

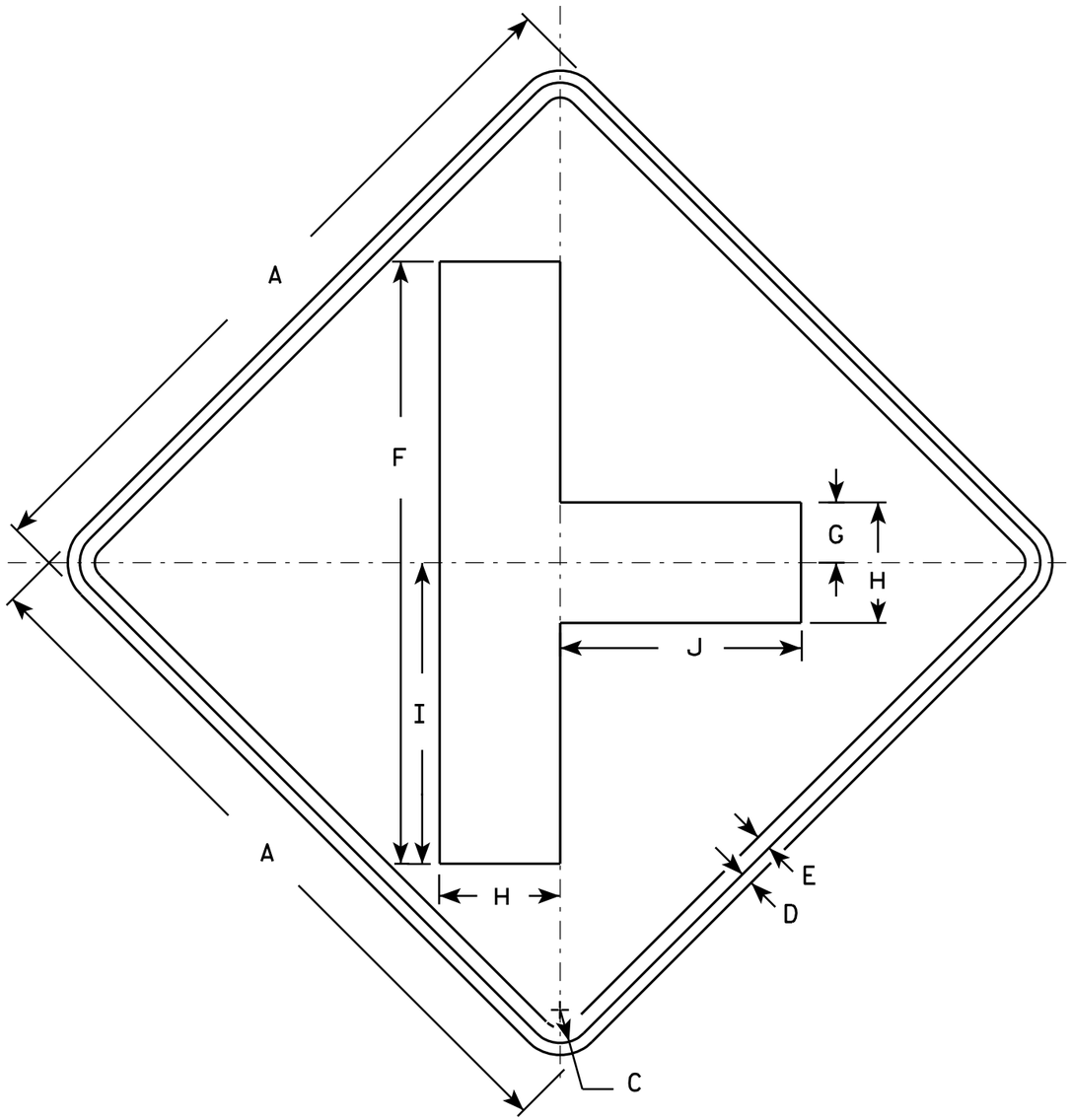

W2-2

NOTES

1. Sign is Type II - Type F Reflective - reference WIS DOT Standard Specification for HIGHWAY and STRUCTURE CONSTRUCTION latest edition.
2. Color:
   Background - Yellow
   Message - Black
3. Corners may be square or rounded when base material is plywood but borders shall be rounded as shown. When base material is metal, the corners and borders shall be rounded.

SIZE	A	B	C	D	E	F	G	H	I	J	K	L	M	N	O	P	Q	R	S	T	U	V	W	X	Y	Z	Area sq. ft.
1	24		1 1/8	3/8	1/2	20	2	4	10	8																	4.0
2S	30		1 3/8	1/2	5/8	25	2 1/2	5	12 1/2	10																	6.25
2M	30		1 3/8	1/2	5/8	25	2 1/2	5	12 1/2	10																	6.25
3	36		1 5/8	5/8	3/4	30	3	6	15	12																	9.0
4	48		2 1/4	3/4	1	40	4	8	20	16																	16.0
5																											

STANDARD SIGN
W2-2

WISCONSIN DEPT OF TRANSPORTATION

APPROVED Matthew R Rauch
for State Traffic Engineer

DATE 5/29/12 PLATE NO. W2-2.6

PROJECT NO:	HWY:	COUNTY:		SHEET NO: 193	E

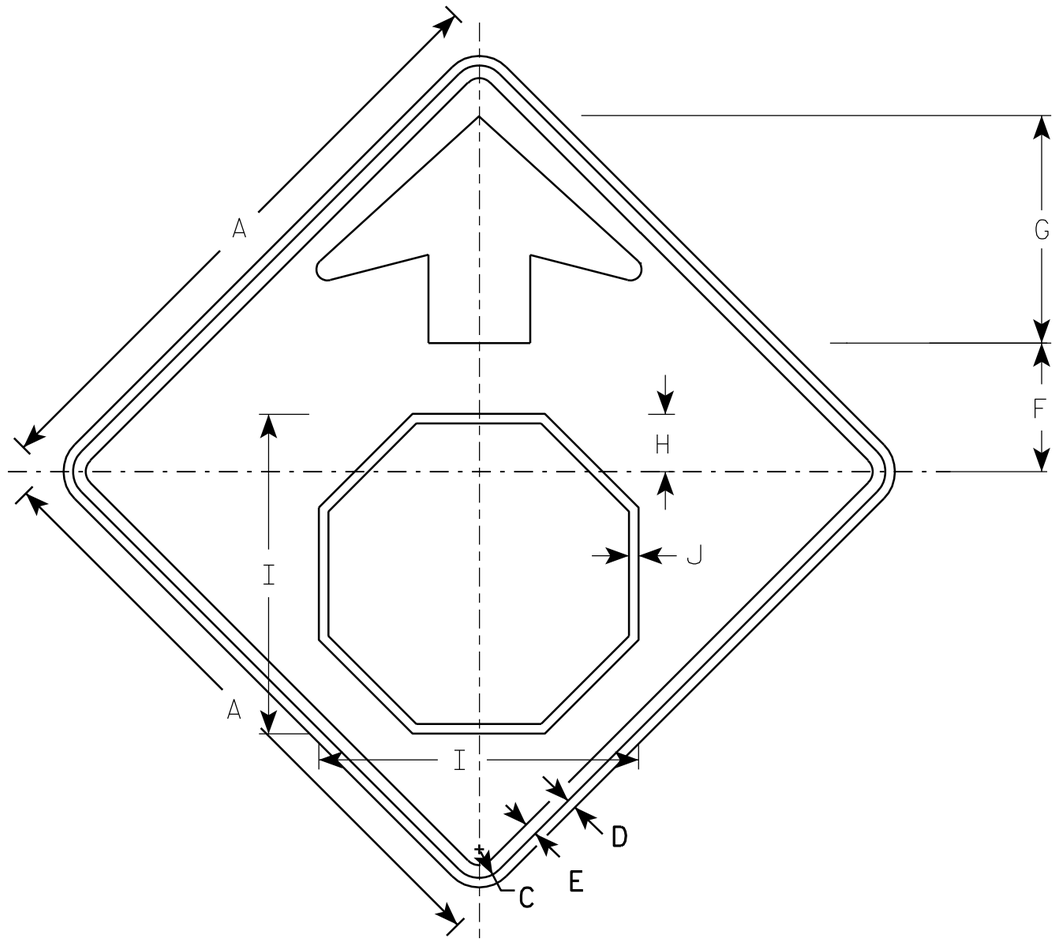

W3-1

NOTES

1. All Signs Type II - Type F Reflective - reference WIS DOT Standard Specification for HIGHWAY and STRUCTURE CONSTRUCTION latest edition.
2. Color:
   Background - YELLOW
   Arrow & Border - BLACK
   Stop Symbol - WHITE BORDER ON RED BACKGROUND

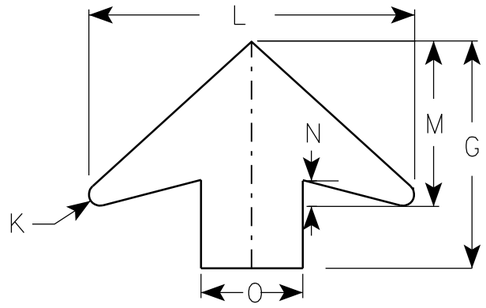

ARROW DETAIL

SIZE	A	B	C	D	E	F	G	H	I	J	K	L	M	N	O	P	Q	R	S	T	U	V	W	X	Y	Z	Area sq. ft.
1	30		1 3/8	1/2	5/8	6 1/4	11 1/4	2 7/8	15 3/4	1/2	1/2	16	8	1 1/4	5												6.25
2S	36		1 5/8	5/8	3/4	7 1/2	13 1/2	3 1/2	19	5/8	5/8	19 1/4	9 3/4	1 5/8	6												9.0
2M	36		1 5/8	5/8	3/4	7 1/2	13 1/2	3 1/2	19	5/8	5/8	19 1/4	9 3/4	1 5/8	6												9.0
3	36		1 5/8	5/8	3/4	7 1/2	13 1/2	3 1/2	19	5/8	5/8	19 1/4	9 3/4	1 5/8	6												9.0
4	48		2 1/4	3/4	1	10	17 7/8	4 1/2	25 1/8	3/4	7/8	25 5/8	13	2	8												16.0
5	48		2 1/4	3/4	1	10	17 7/8	4 1/2	25 1/8	3/4	7/8	25 5/8	13	2	8												16.0

STANDARD SIGN
W3-1

WISCONSIN DEPT OF TRANSPORTATION

APPROVED Matthew R Rauch
for State Traffic Engineer

DATE 6/7/10 PLATE NO. W3-1.12

PROJECT NO:

SHEET NO: 194 E

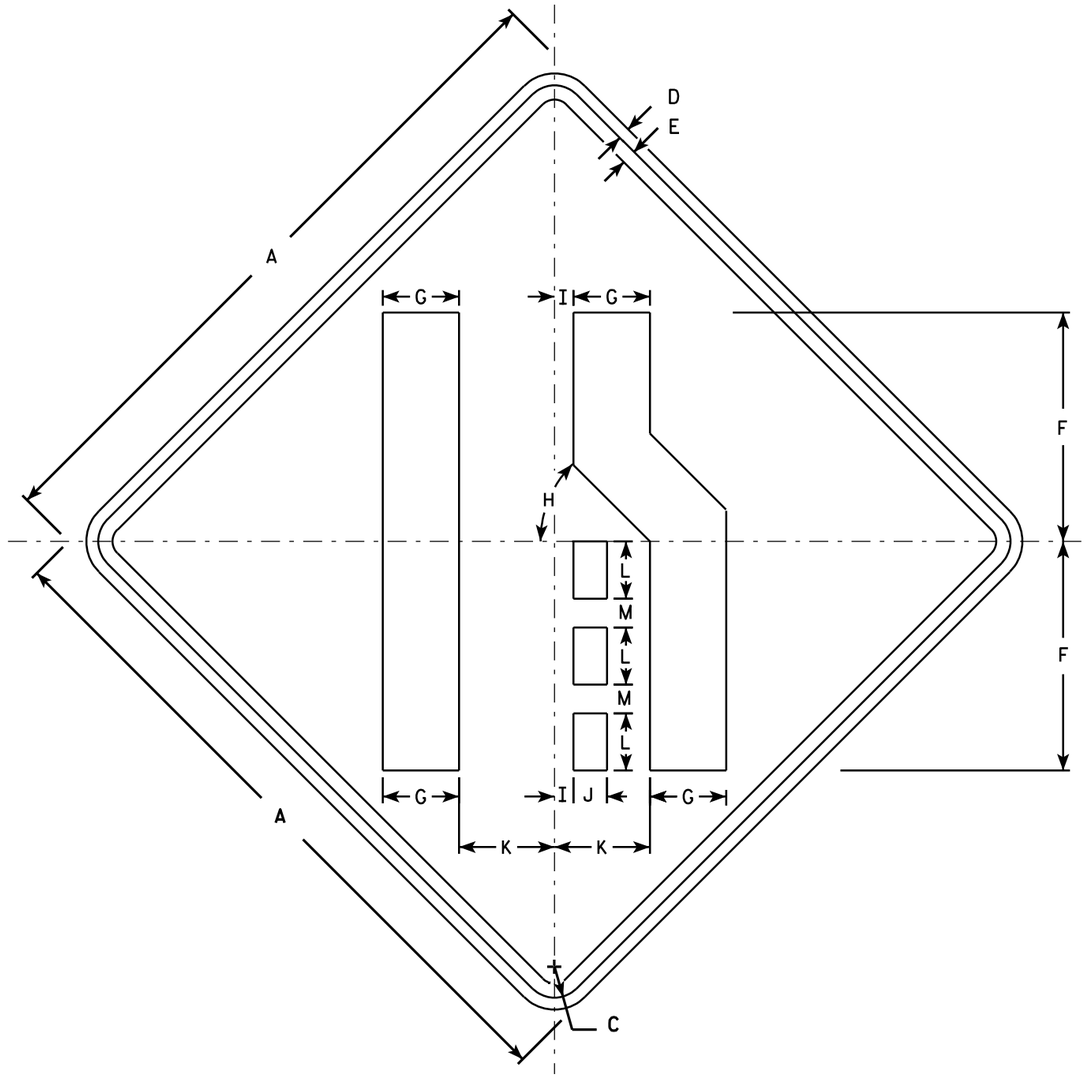

W4-2R

NOTES

1. Sign is Type II - Type F Reflective - reference WIS DOT Standard Specification for HIGHWAY and STRUCTURE CONSTRUCTION latest edition.
2. Color:
   Background - Yellow
   Message - Black
3. Corners may be square or rounded when base material is plywood but borders shall be rounded as shown. When base material is metal, the corners and borders shall be rounded.
4. W4-2L is the same as W4-2R except the symbol is reversed along the vertical centerline.

SIZE	A	B	C	D	E	F	G	H	I	J	K	L	M	N	O	P	Q	R	S	T	U	V	W	X	Y	Z	Area sq. ft.
1	30		1 3/8	1/2	5/8	10	3 3/8	45°	7/8	1 1/2	4 1/4	2 1/2	1 1/4														6.25
2S	36		1 5/8	5/8	3/4	12	4	45°	1	1 3/4	5	3	1 1/2														9.0
2M	36		1 5/8	5/8	3/4	12	4	45°	1	1 3/4	5	3	1 1/2														9.0
3	36		1 5/8	5/8	3/4	12	4	45°	1	1 3/4	5	3	1 1/2														9.0
4	48		2 1/4	3/4	1	16	5 3/8	45°	1 1/4	2 3/8	6 3/4	4	2														16.0
5	48		2 1/4	3/4	1	16	5 3/8	45°	1 1/4	2 3/8	6 3/4	4	2														16.0

STANDARD SIGN
W4-2

WISCONSIN DEPT OF TRANSPORTATION

APPROVED Matthew R Rauch
for State Traffic Engineer

DATE 3/12/13 PLATE NO. W4-2.14

PROJECT NO:

SHEET NO: 195 E

STATE PROJECT NUMBER
1530-07-62

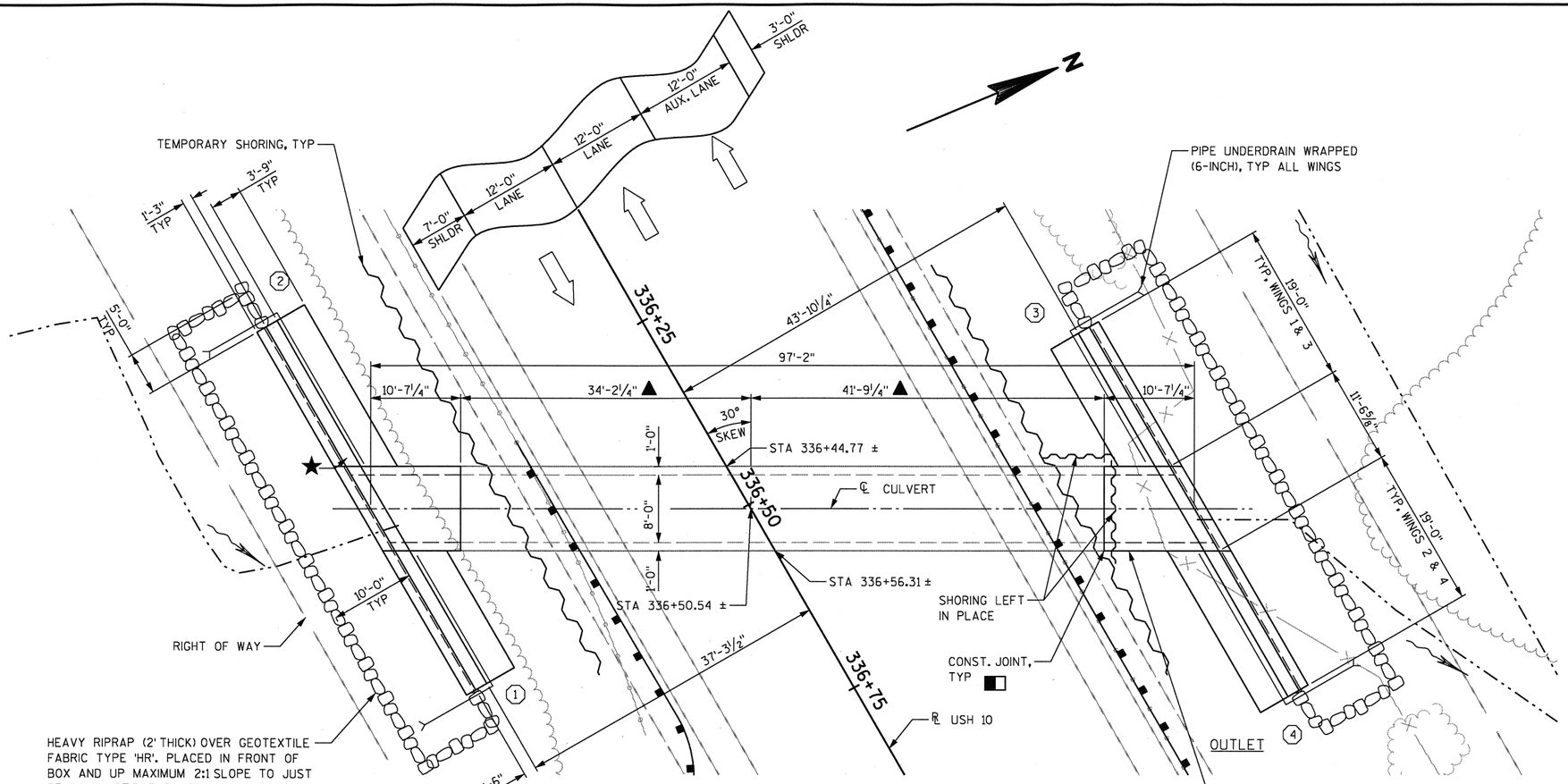

PLAN

SINGLE-CELL BOX CULVERT EXTENSION

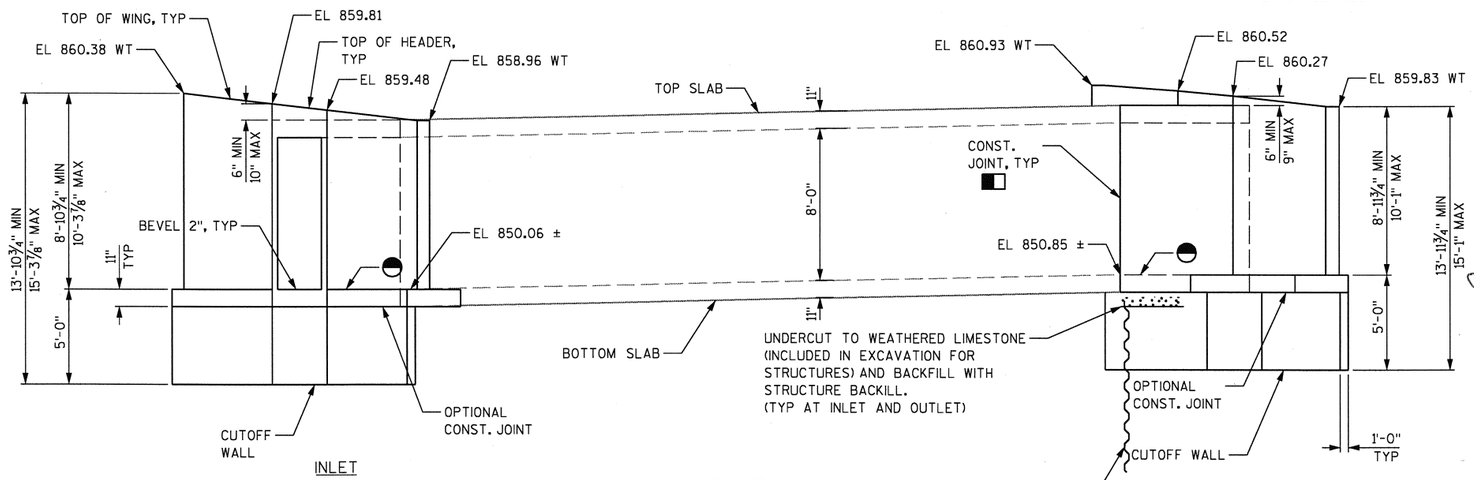

ELEVATION

(RIPRAP NOT SHOWN FOR CLARITY)

DESIGN DATA:

VEHICLE LOAD: ——— HL-93

THE STRUCTURE IS DESIGNED FOR AN EARTH LOAD OF 8.0 FEET.

ULTIMATE DESIGN STRESSES:

CONCRETE MASONRY ——— f'c = 3500 psi
HIGH STRENGTH BAR
STEEL REINFORCEMENT ——— fy = 60000 psi

TRAFFIC DATA:

USH 10

ADT (2012) = 1800 - 2700
ADT (2033) = 2300 - 3300
ROADWAY DESIGN SPEED = 55 MPH

LIST OF DRAWINGS:

GENERAL PLAN ——— 1
CROSS SECTION, QUANTITIES & GENERAL NOTES ——— 2
SUBSURFACE EXPLORATION ——— 3
BOX END DETAILS ——— 4
WINGS 1& 2 DETAILS ——— 5
WINGS 3 & 4 DETAILS ——— 6
DETAILS & BILL OF BARS ——— 7

(#) INDICATES WING NUMBER

★ NAME PLATE. SEE DETAIL ON SHEET 5

▲ LIMITS OF EXISTING STRUCTURE TO REMAIN.

◓ BOX EXTENSION BUILT LEVEL. MATCH EXISTING BOX ELEVATION AT CONSTRUCTION JOINT.

▮ 18" MIN. WIDTH RUBBERIZED MEMBRANE WATERPROOFING UP WALLS AND ACROSS TOP SLAB.

WISCONSIN
GARY A. RUCHTI
E-30936
MADISON
WI
PROFESSIONAL ENGINEER

6-14-13

NO.	DATE	REVISION	BY

Mead & Hunt, Inc.
6501 Watts Road
Madison, WI 53719
phone: 608.273.6380
www.meadhunt.com

STATE OF WISCONSIN
DEPARTMENT OF TRANSPORTATION

ACCEPTED William C. Dreher CVR — 6/17/13
CHIEF STRUCTURES DESIGN ENGINEER — DATE

STRUCTURE C-47-234

USH 10 OVER DRAINAGE WAY

COUNTY	TOWN/~~CITY/VILLAGE~~
PIERCE	SALEM

DESIGN SPEC.
AASHTO LRFD BRIDGE DESIGN SPECIFICATION

DESIGNED BY	MJB	DESIGN CK'D.	GAR	DRAWN BY	MJB	PLANS CK'D.	GAR

GENERAL PLAN

SHEET 1 OF 7
196

BRIDGE OFFICE CONTACT
WILLIAM DREHER, P.E.
TELEPHONE: (608) 266-8489
CONSULTANT CONTACT
GARY RUCHTI, P.E.
TELEPHONE: (608) 273-6380

8

8

STATE PROJECT NUMBER

1530-07-62

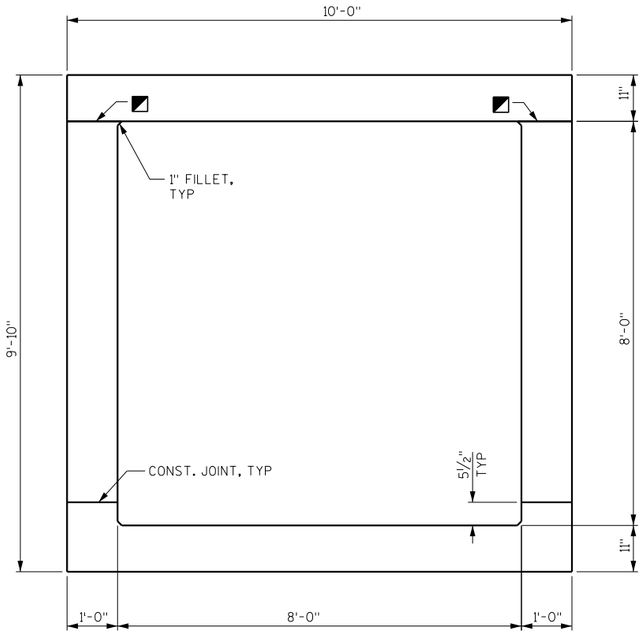

SECTION THRU BOX

(NORMAL TO ℄ OF STRUCTURE)

◪ OPTIONAL CONSTRUCTION JOINT. OMIT 1" FILLET IF OPTIONAL CONSTRUCTION JOINT IS USED.

STRUCTURE BACKFILL DETAIL - BEHIND WALL

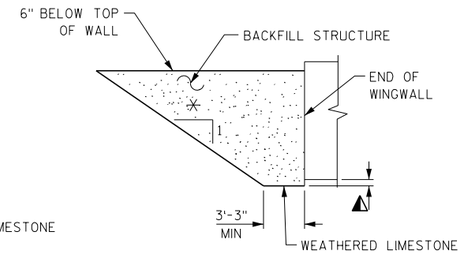

STRUCTURE BACKFILL DETAIL - END OF WALL

✳ OSHA MINIMUM SLOPE, 1.5 TO 1 USED FOR STRUCTURE BACKFILL CALCULATIONS.

◭ ESTIMATED TO BE 6" AT SOUTH END.
ESTIMATED TO BE 6'-5" AT NORTH END.

GENERAL NOTES

DRAWINGS SHALL NOT BE SCALED.

BAR STEEL REINFORCEMENT SHALL BE EMBEDDED 2" CLEAR UNLESS OTHERWISE SHOWN OR NOTED.

THE FIRST OR FIRST TWO DIGITS OF THE BAR MARK SIGNIFIES THE BAR SIZE.

THE UPPER LIMITS OF "EXCAVATION FOR STRUCTURES CULVERTS C-47-234" SHALL BE THE EXISTING GROUND LINE.

WITHIN THE LENGTH OF THE BOX ALL SPACES EXCAVATED AND NOT OCCUPIED BY THE BOX EXTENSION SHALL BE BACKFILLED WITH STRUCTURE BACKFILLTO THE ELEVATION AND SECTION EXISTING PRIOR TO EXCAVATION WITHIN THE LENGTH OF THE CULVERT.

THE CONCRETE IN CUT-OFF WALLS MAY BE PLACED UNDERWATER IF THE EXCAVATION CANNOT BE DEWATERED.

ALL STATIONS AND ELEVATIONS ARE IN FEET.

RUBBERIZED MEMBRANE WATERPROOFING AND KEYED CONSTRUCTION JOINT TO EXTEND ALONG JOINT BETWEEN WING AND BOX FROM BOTTOM SLAB TO TOP OF WING. SEE DETAIL ON SHEET 4.

◓ ELEVATIONS SHOWN ON THIS PLAN ARE REFERENCED TO THE NAV88 DATUM.

DIMENSIONS SHOWN ARE BASED ON THE ORIGINAL STRUCTURE PLANS.

THE CONTRACTOR SHALL SUPPLY A NEW NAME PLATE IN ACCORDANCE WITH SECTION 502.3.11 OF THE STANDARD SPECIFICATIONS AND THE STANDARD DETAIL DRAWINGS. NAME PLATE TO SHOW ORIGINAL CONSTRUCTION YEAR.

★ SEE CONSTRUCTION JOINT DETAILS ON SHEET 4 BETWEEN NEW AND EXISTING BOX SECTIONS.

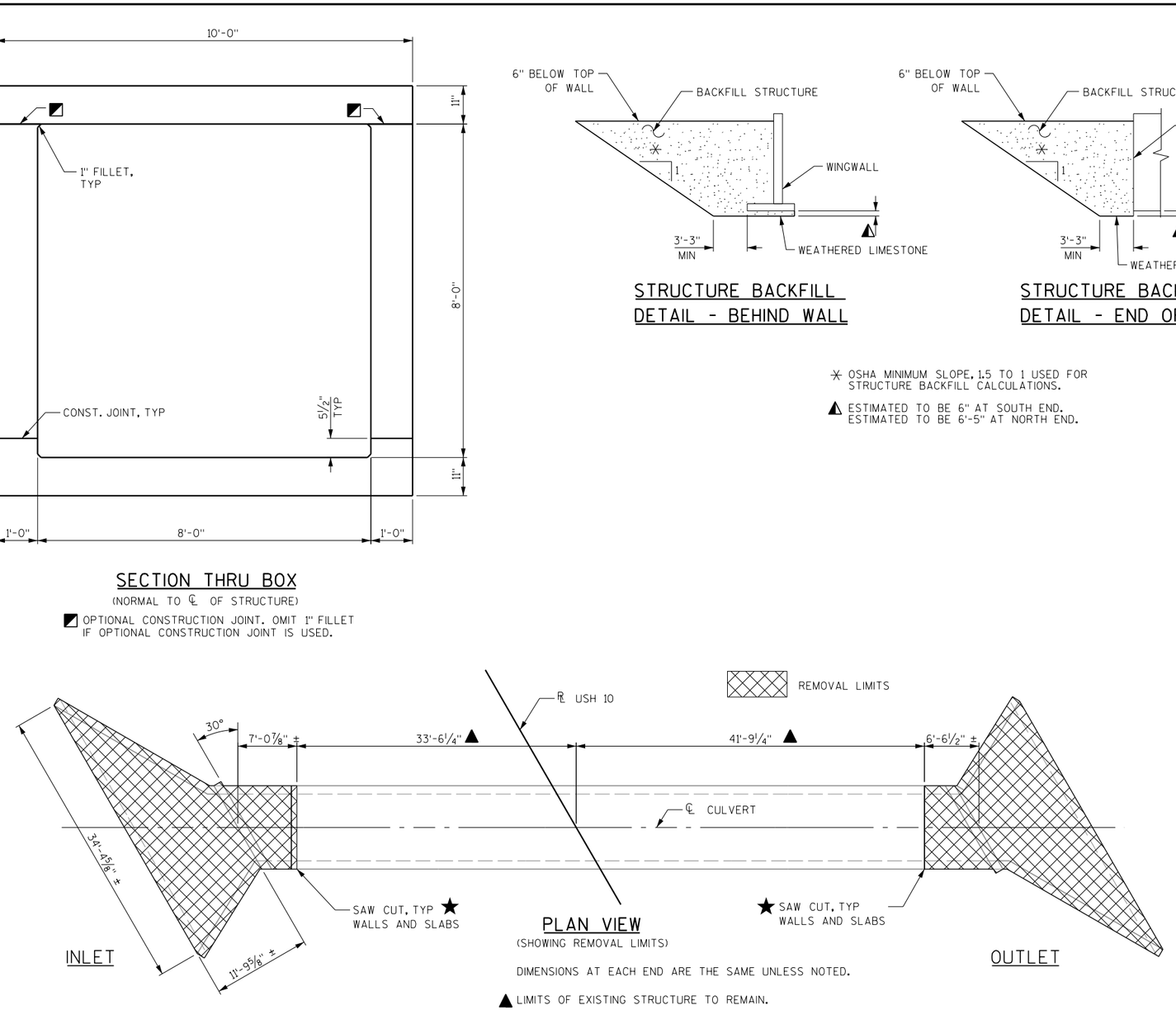

PLAN VIEW

(SHOWING REMOVAL LIMITS)

DIMENSIONS AT EACH END ARE THE SAME UNLESS NOTED.

▲ LIMITS OF EXISTING STRUCTURE TO REMAIN.

BENCHMARKS ◓

NO.	STATION	DESCRIPTION	ELEV.
B1	334+29.8	PK NAIL IN PAVEMENT 16.8' RT	873.80

QUANTITIES

ITEM NO.	BID ITEMS	UNIT	TOTALS
203.0200	REMOVING OLD STRUCTURE (336+45)	LS	1
206.2000	EXCAVATION FOR STRUCTURES CULVERTS (C-47-234)	LS	1
206.6000.S	TEMPORARY SHORING	SF	3440
210.0100	BACKFILL STRUCTURE	CY	1150
502.5005	MASONRY ANCHORS TYPE L NO. 5 BARS	EA	72
504.0100	CONCRETE MASONRY CULVERTS	CY	102
505.0410	BAR STEEL REINFORCEMENT HS CULVERTS	LB	10140
516.0500	RUBBERIZED MEMBRANE WATERPROOFING	SY	32
606.0300	RIPRAP HEAVY	CY	80
612.0406	PIPE UNDERDRAIN WRAPPED 6-INCH	LF	125
645.0120	GEOTEXTILE FABRIC TYPE 'HR'	CY	180
SPV.0165.01	TEMPORARY SHORING LEFT IN PLACE	SF	170

NO.	DATE	REVISION	BY

STATE OF WISCONSIN
DEPARTMENT OF TRANSPORTATION
STRUCTURES DESIGN SECTION

STRUCTURE C-47-234

DRAWN BY MJB | PLANS CK'D. GAR

CROSS SECTION QUANTITIES & GENERAL NOTES

SHEET 2 OF 7
197

8

FILE NAME : X:±23046-80±10024±TECH±CADD±080102_gn.dgn PLOT DATE : 6/14/2013 PLOT BY : 1258MJB PLOT SCALE : 3.000000 '/ in.

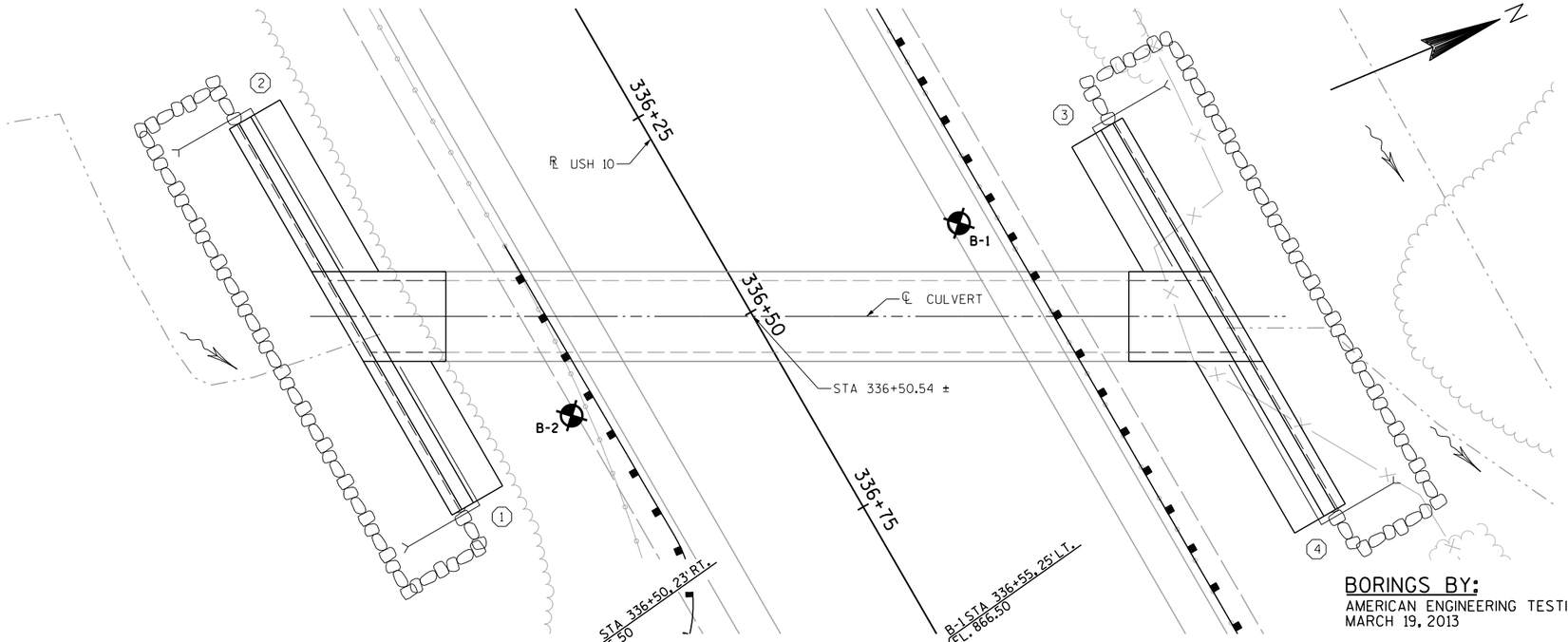

BORINGS BY:
AMERICAN ENGINEERING TESTING, INC.
MARCH 19, 2013

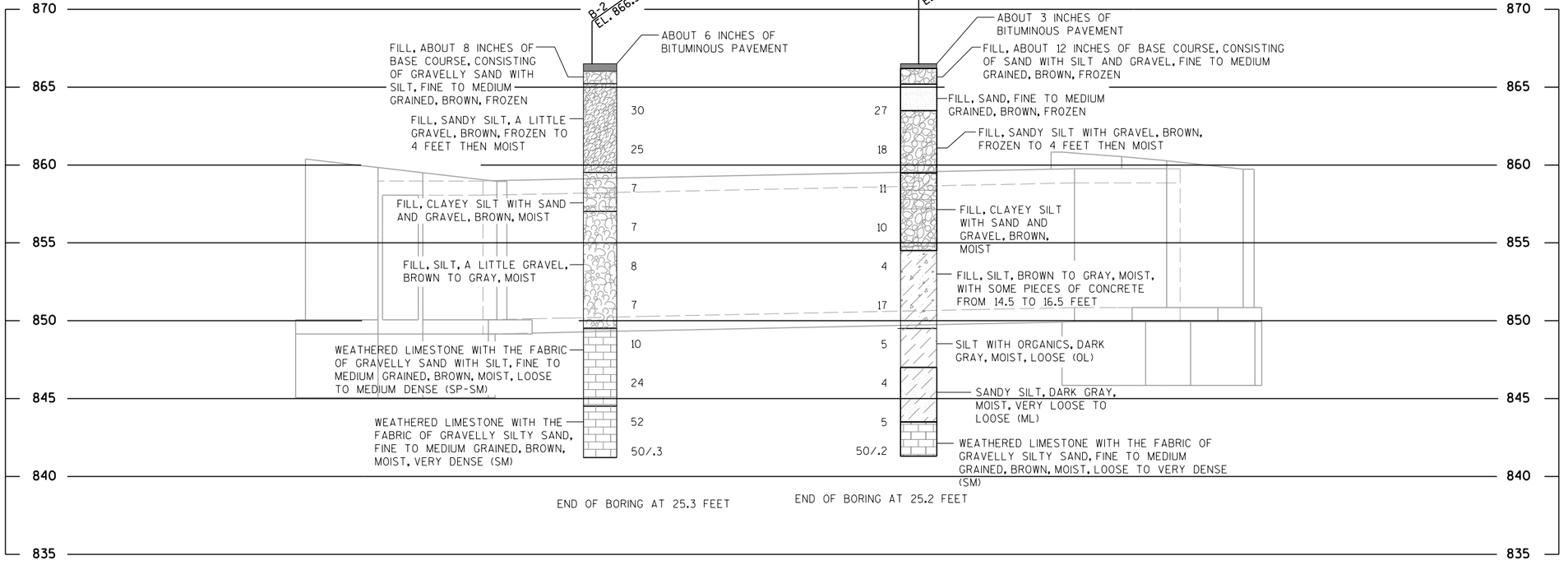

STATE PROJECT NUMBER

1530-07-62

ABBREVIATIONS
F— FINE M— MEDIUM C— COARSE
WS— WEATHERED SO— SOUND

MATERIAL SYMBOLS
BITUMINOUS PAVEMENT, SILT, SANDSTONE
SAND, PEAT, LIMESTONE
GRAVEL, CLAY, CONCRETE

LEGEND OF PROBING

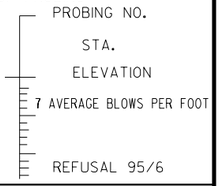

95/6=95 BLOWS FOR 6" PENETRATION
PROBING TAKEN WITH A 350#WT. FALLING 18" ON A 2" O.D. POINT.

LEGEND OF BORING

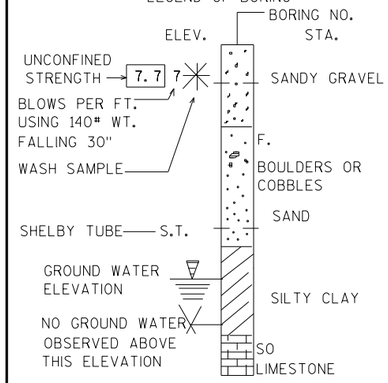

UNLESS OTHERWISE SPECIFIED, THE BLOWS PER FOOT AT THE LOCATIONS INDICATED ARE BASED ON DRIVING A O.D.X1.4" I.D. SPLIT SPOON SAMPLER WITH A 140# HAMMER HAVING A FREE FALL OF 30". THE BLOW COUNT IS TAKEN IN UNDISTURBED SOIL IMMEDIATELY BELOW A CASED OR OPEN HOLE ELIMINATING SIDE FRICTION ON THE DRIVE PIPE.

SUBSURFACE EXPLORATION FOR FOUNDATION DESIGN AND BIDDERS INFORMATION

TO OBTAIN RELATIVE DATA CONCERNING THE CHARACTER OF MATERIAL IN AND UPON WHICH THE FOUNDATION MIGHT BE BUILT, BORINGS AND/OR SOUNDINGS WERE MADE AT POINTS APPROXIMATELY AS INDICATED ON THIS DRAWING. THE DATA PRESENTED HEREIN REPRESENTS THE FINDINGS OF THE SUBSURFACE EXPLORATIONS MADE. HOWEVER, BECAUSE THE DEPTHS INVESTIGATED ARE LIMITED AND THE AREA OF THE BORINGS AND/OR SOUNDINGS IS VERY SMALL IN RELATION TO THE ENTIRE AREA, THE DIVISION OF HIGHWAYS DOES NOT WARRANT CONDITIONS BELOW THE DEPTHS INVESTIGATED OR THAT THE CLASSIFICATION OF MATERIAL ENCOUNTERED IN THESE INVESTIGATIONS IS NECESSARILY TYPICAL OF THE ENTIRE SITE.

NO.	DATE	REVISION	BY

STATE OF WISCONSIN
DEPARTMENT OF TRANSPORTATION
STRUCTURES DESIGN SECTION

STRUCTURE C-47-234

DRAWN BY MJB | PLANS CK'D. GAR

SUBSURFACE EXPLORATION

SHEET 3 OF 7

FILE NAME : X:\23046-80\10024\TECH\CADD\080103_se.dgn
PLOT DATE : 4/30/2013
PLOT BY : 1258MJB
PLOT NAME :
PLOT SCALE : 16.0000 sf / in.
WISDOT/CADDS SHEET 42

STATE PROJECT NUMBER

1530-07-62

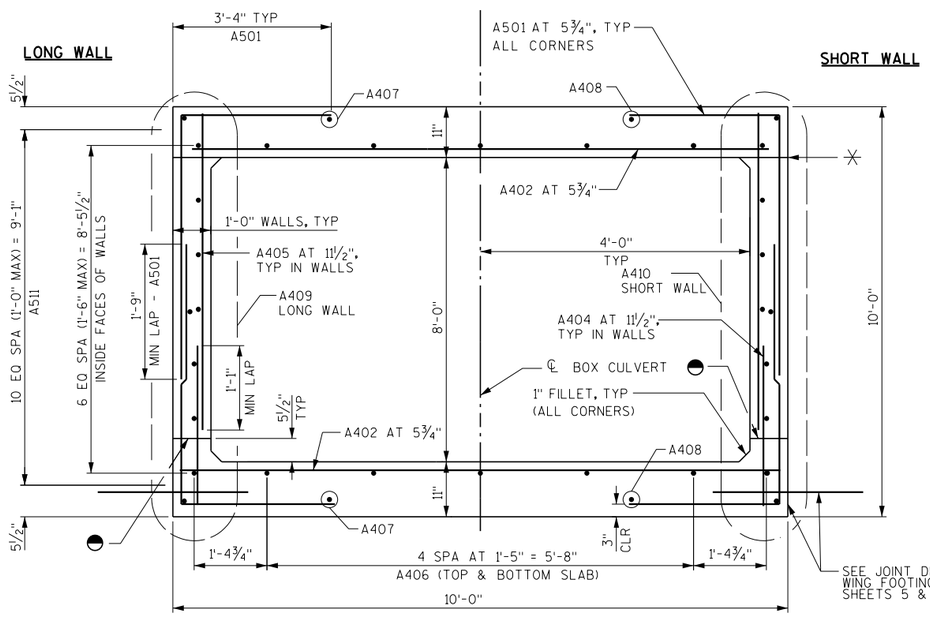

TYPICAL SECTION THRU BOX EXTENSION

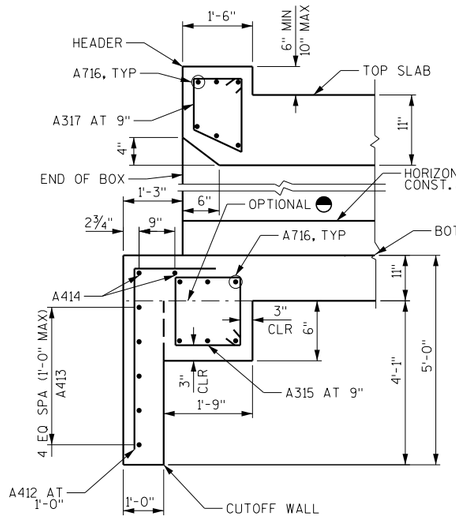

HEADER DETAILS - INLET

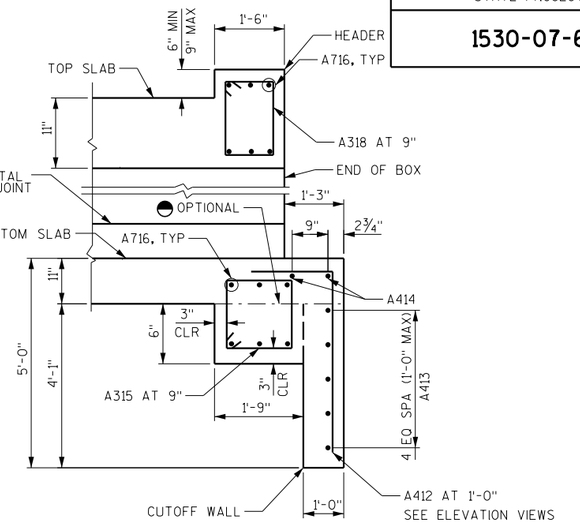

HEADER DETAILS - OUTLET

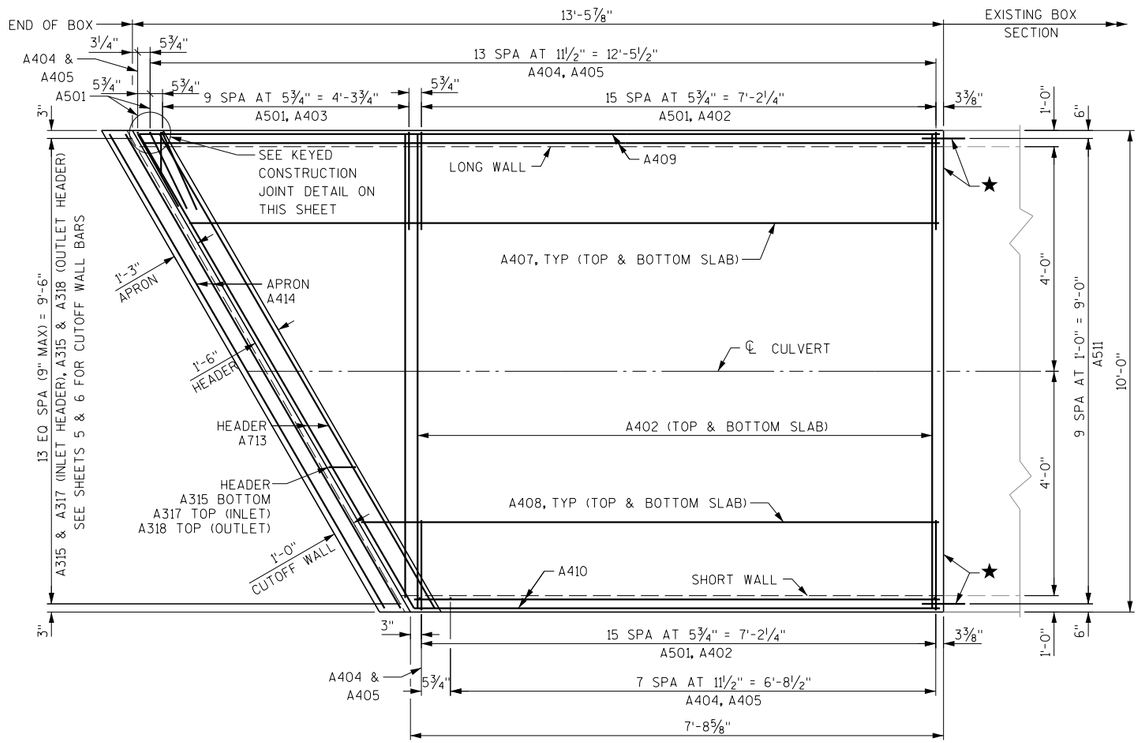

SLAB REINFORCEMENT PLAN

INLET SHOWN - OUTLET SIMILAR

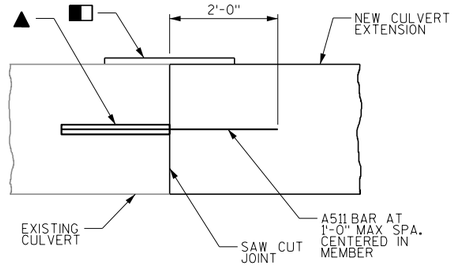

CONSTRUCTION JOINT

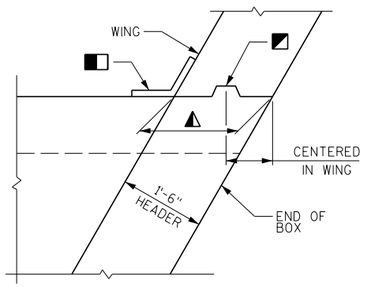

VERTICAL KEYED CONSTRUCTION JOINT

(TYP AT ALL WINGS)

NOTES

- ✳ OPTIONAL CONSTRUCTION JOINT. OMIT 1" FILLET IF OPTIONAL CONST. JOINT IS USED.
- ◪ KEYED CONSTRUCTION JOINT FORMED BY BEVELED KEYWAY 4" DEEP BY 6" WIDE. STOP 1'-0" FROM TOP OF HEADER AND EXTEND TO TOP OF WING FOOTING.
- ◭ USE DEBONDER ON SURFACE OF CONCRETE BETWEEN WING AND BOX POURS.
- ★ CONSTRUCTION JOINT. SEE DETAILS SEE ON THIS SHEET.
- ▲ MASONRY ANCHORS TYPE L NO. 5 BARS, MIN. PULLOUT CAPACITY OF 19 KIPS. EMBED A MINIMUM OF 10½".
- ◓ HORIZONTAL CONSTRUCTION JOINT. CONTINUE ALL REINFORCEMENT THRU JOINT.
- ◧ 18" MIN. WIDTH RUBBERIZED MEMBRANE WATERPROOFING UP WALLS AND ACROSS TOP OF SLAB.

FF - FRONT FACE
BF - BACK FACE
EF - EACH FACE

NO.	DATE	REVISION	BY

STATE OF WISCONSIN
DEPARTMENT OF TRANSPORTATION
STRUCTURES DESIGN SECTION

STRUCTURE C-47-234

DRAWN BY MJB | PLANS CK'D. GAR

BOX END DETAILS

SHEET 4 OF 7

199

8

8

FILE NAME : X:±23046-80±10024±TECH±CADD±080104_bd.dgn PLOT DATE : 4/30/2013 PLOT BY : 1258MJB PLOT SCALE : 8.000000 '/ in.

STATE PROJECT NUMBER

1530-07-62

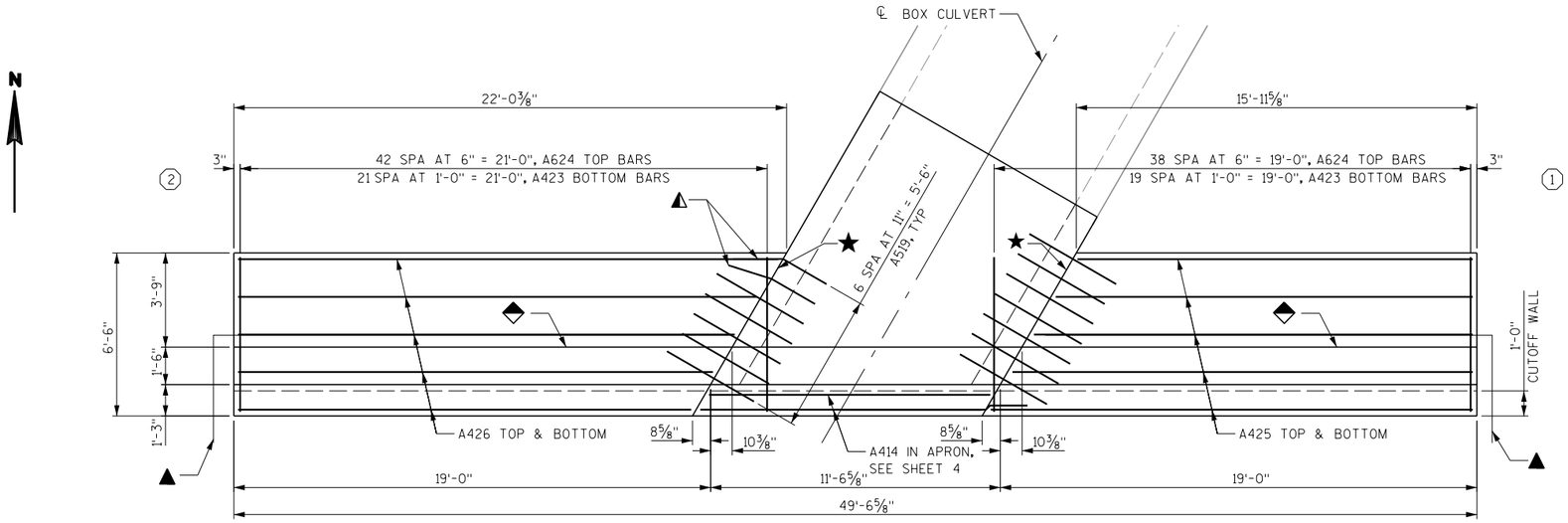

PLAN VIEW AT INLET END

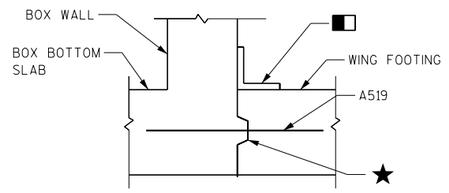

KEYED CONSTRUCTION JOINT

(BETWEEN BOX AND WING FOOTINGS)

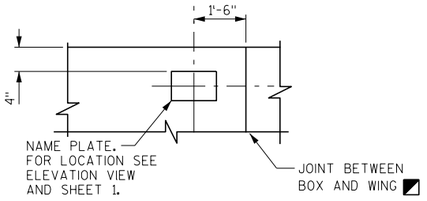

NAME PLATE LOCATION

ON WING 2

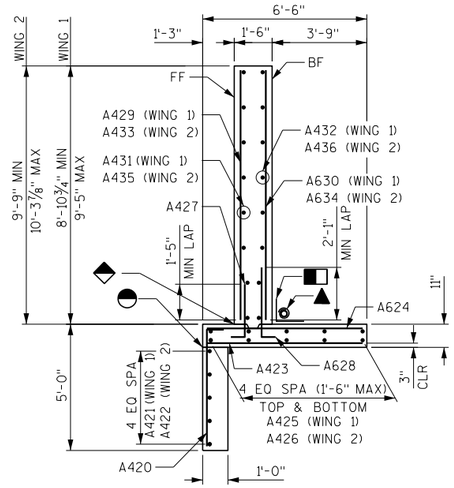

TYPICAL SECTION THRU WING

(WINGS 1 & 2)

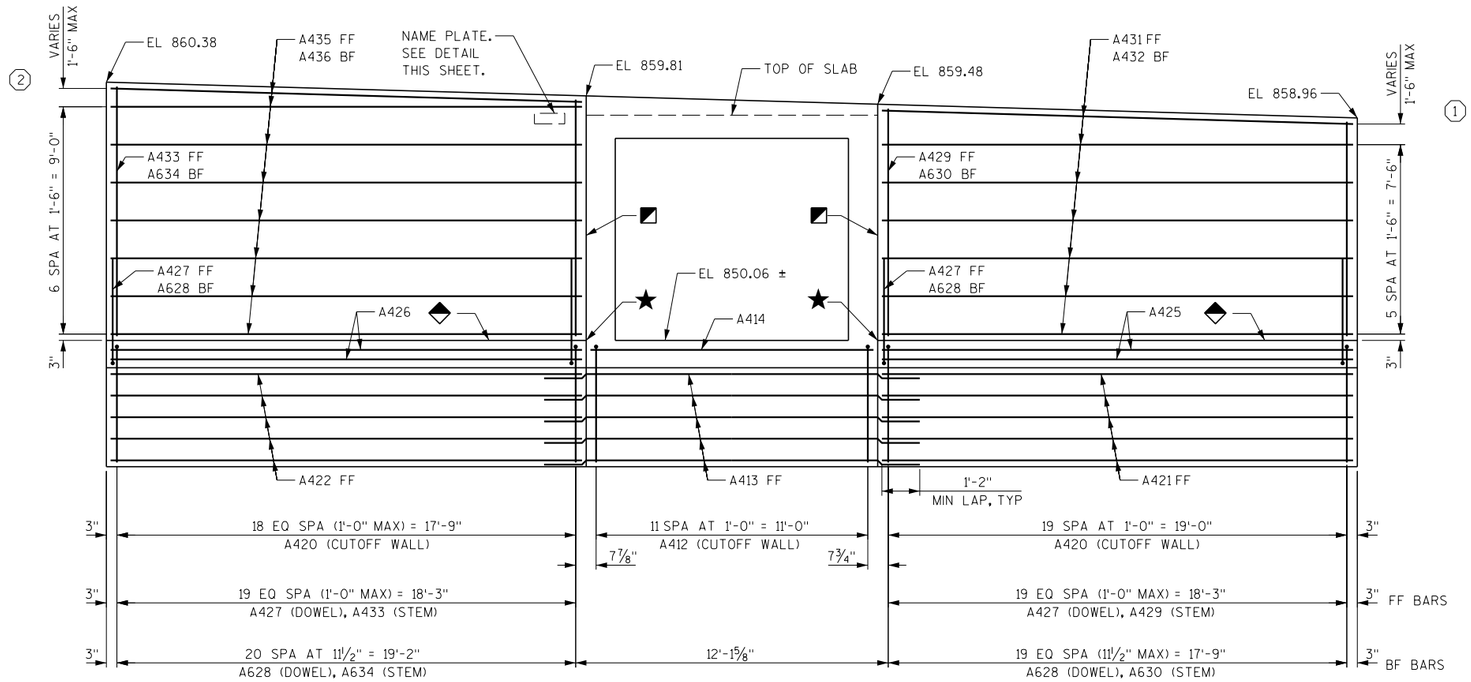

ELEVATION VIEW AT INLET END

NOTES:

- FIELD BEND A519 BARS TO MAINTAIN 2" MINIMUM CLEAR IN THE WING FOOTING OR BOX EXTENSION.
- OPTIONAL HORIZONTAL CONSTRUCTION JOINT. CONTINUE ALL REINFORCEMENT THROUGH JOINT.
- VERTICAL KEYED CONSTRUCTION JOINT FORMED BY BEVELED KEYWAY 4" DEEP BY 6" WIDE. STOP 1'-0" FROM TOP OF HEADER AND EXTEND TO TOP OF WING FOOTING. SEE DETAIL ON SHEET 4.
- HORIZONTAL KEYED CONSTRUCTION JOINT FORMED BY BEVELED KEYWAY 4" DEEP BY 6" WIDE. SEE DETAIL THIS SHEET.
- 18" MIN. WIDTH RUBBERIZED MEMBRANE WATERPROOFING.
- PIPE UNDERDRAIN WRAPPED (6-INCH) SLOPE 05.% MIN TO SUITABLE DRAINAGE. ATTACH RODENT SHIELD AT END OF PIPE UNDERDRAIN AS DETAILED ON SDD REINFORCED CONCRETE APRON ENDWALL FOR PIPE UNDERDRAIN.
- KEYED CONSTRUCTION JOINT FORMED BY BEVELED KEYWAY 2" DEEP BY 6" WIDE.
- (#) INDICATES WING NUMBER

FF - FRONT FACE
BF - BACK FACE
EF - EACH FACE

NO.	DATE	REVISION	BY

STATE OF WISCONSIN
DEPARTMENT OF TRANSPORTATION
STRUCTURES DESIGN SECTION

STRUCTURE C-47-234

DRAWN BY MJB | PLANS CK'D. GAR

WINGS 1 & 2 DETAILS

SHEET 5 OF 7

200

8

8

STATE PROJECT NUMBER

1530-07-62

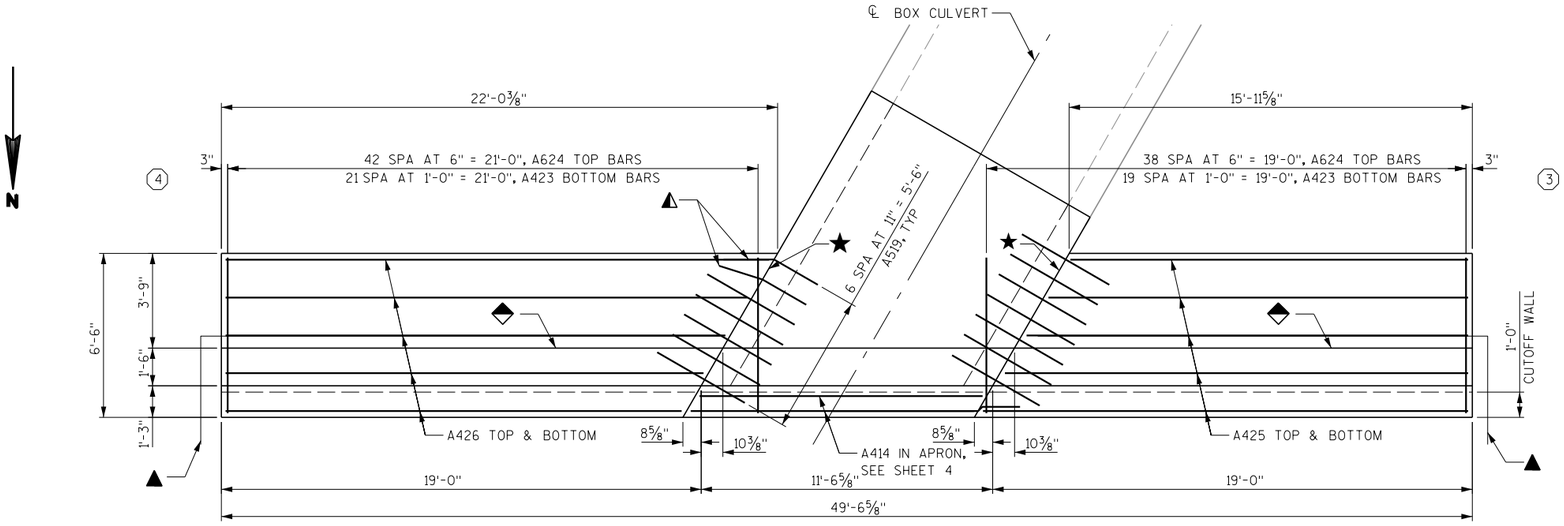

PLAN VIEW AT OUTLET END

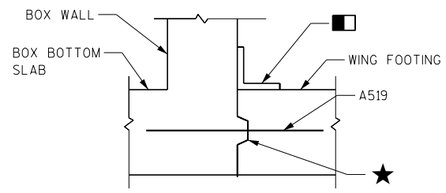

KEYED CONSTRUCTION JOINT

(BETWEEN BOX AND WING FOOTINGS)

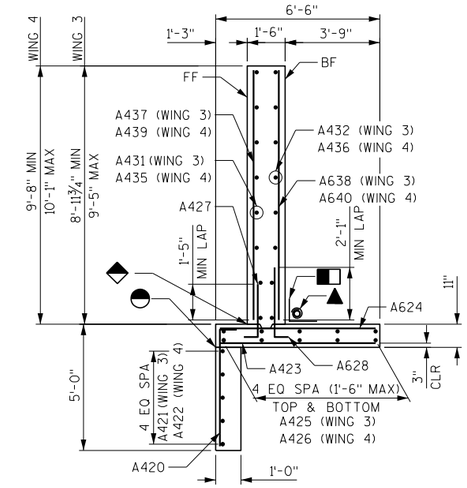

TYPICAL SECTION THRU WING

(WINGS 3 & 4)

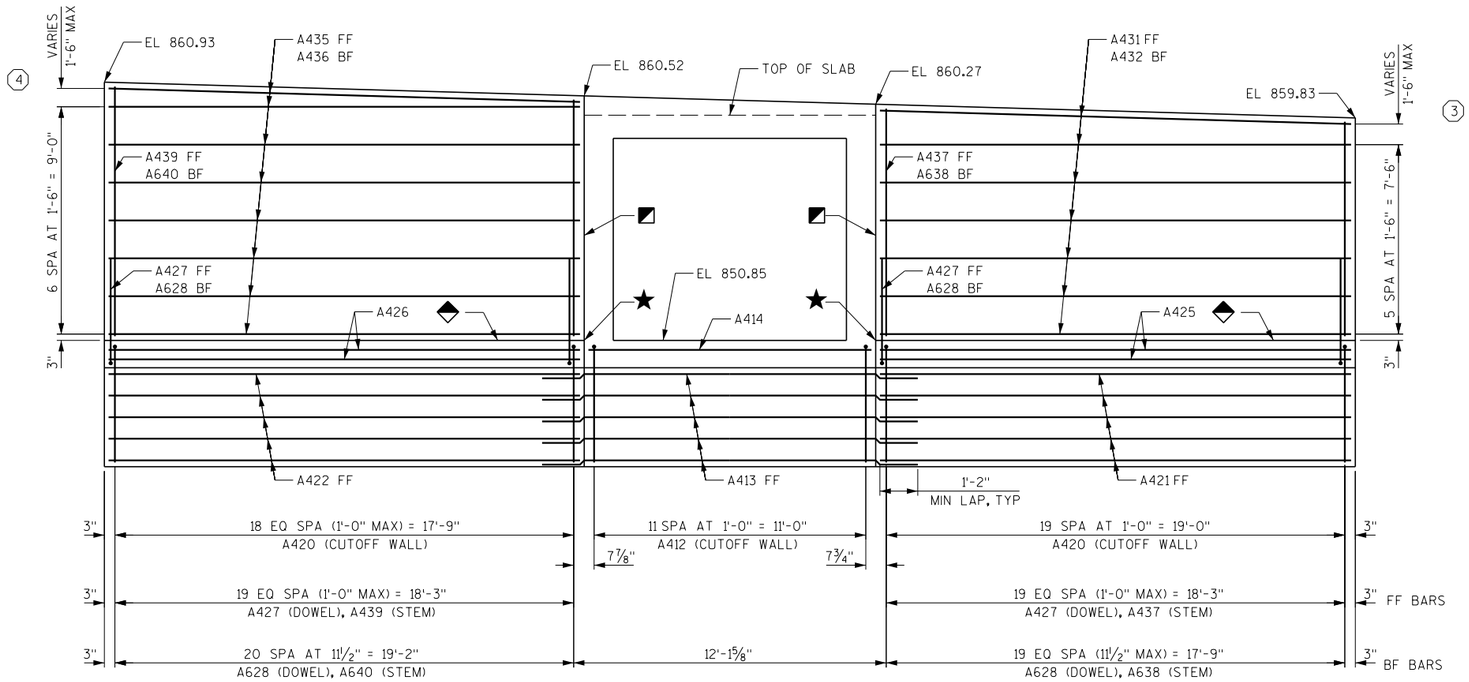

ELEVATION VIEW AT OUTLET END

NOTES:

- ▲ FIELD BEND A519 BARS TO MAINTAIN 2" MINIMUM CLEAR IN THE WING FOOTING OR BOX EXTENSION.
- ◓ OPTIONAL HORIZONTAL CONSTRUCTION JOINT. CONTINUE ALL REINFORCEMENT THROUGH JOINT.
- ◪ VERTICAL KEYED CONSTRUCTION JOINT FORMED BY BEVELED KEYWAY 4" DEEP BY 6" WIDE. STOP 1'-0" FROM TOP OF HEADER AND EXTEND TO TOP OF WING FOOTING. SEE DETAIL ON SHEET 4.
- ★ HORIZONTAL KEYED CONSTRUCTION JOINT FORMED BY BEVELED KEYWAY 4" DEEP BY 6" WIDE. SEE DETAIL THIS SHEET.
- ■ 18" MIN. WIDTH RUBBERIZED MEMBRANE WATERPROOFING.
- ▲ PIPE UNDERDRAIN WRAPPED (6-INCH) SLOPE 05.% MIN TO SUITABLE DRAINAGE. ATTACH RODENT SHIELD AT END OF PIPE UNDERDRAIN AS DETAILED ON SDD REINFORCED CONCRETE APRON ENDWALL FOR PIPE UNDERDRAIN.
- ◆ KEYED CONSTRUCTION JOINT FORMED BY BEVELED KEYWAY 2" DEEP BY 6" WIDE.
- (#) INDICATES WING NUMBER

FF - FRONT FACE
BF - BACK FACE
EF - EACH FACE

NO.	DATE	REVISION	BY

STATE OF WISCONSIN
DEPARTMENT OF TRANSPORTATION
STRUCTURES DESIGN SECTION

STRUCTURE C-47-234

DRAWN BY	PLANS CK'D.
MJB	GAR

WINGS 3 & 4 DETAILS

SHEET 6 OF 7
201

8

8

STATE PROJECT NUMBER
1530-07-62

BILL OF BARS
BOX EXTENSION & WINGS

COATED= 0 LBS.
UNCOATED= 10140 LBS

MARK	NUMBER COATED	NUMBER UNCOATED	LENGTH FT. - IN.	BENT	BAR SERIES	LOCATION	
A 5 01		176	8 - 9	X		BOX CORNERS - TOP & BOTTOM - BOTH ENDS	TRANS.
A 4 02		64	9 - 8			BOX - TOP & BOTTOM SLAB - BOTH ENDS	TRANS.
⚠ A 4 03		40	5 - 5		X	BOX - TOP & BOTTOM SLAB - BOTH ENDS	TRANS.
A 4 04		48	2 - 5			BOX DOWELS - WALLS - BOTH ENDS	VERT.
A 4 05		48	8 - 2			BOX - WALLS - BOTH ENDS	VERT.
⚠ A 4 06		20	10 - 3		X	BOX - TOP & BOTTOM SLAB - BOTH ENDS	LONG.
A 4 07		4	11 - 2			BOX - TOP & BOTTOM SLAB - BOTH ENDS	LONG.
A 4 08		4	9 - 3			BOX - TOP & BOTTOM SLAB - BOTH ENDS	LONG.
A 4 09		20	12 - 8			BOX - LONG WALL - BOTH ENDS	LONG.
A 4 10		20	7 - 5			BOX - SHORT WALL - BOTH ENDS	LONG.
A 5 11		72	2 - 11			BOX DOWELS - AT VERTICAL CONSTRUCTION JOINT	HORIZ.
A 4 12		24	6 - 7	X		CUTOFF WALL - BOTH ENDS	VERT.
A 4 13		10	14 - 4			CUTOFF WALL - BOTH ENDS	HORIZ.
A 4 14		4	11 - 1			BOX - APRON	TRANS.
A 3 15		28	5 - 5	X		BOX - BOTTOM INLET & OUTLET HEADER	VERT.
A 7 16		24	11 - 1			BOX - TOP INLET & OUTLET HEADER	HORIZ.
A 3 17		14	5 - 0	X		BOX - TOP INLET HEADER	VERT.
A 3 18		14	5 - 3	X		BOX - TOP OUTLET HEADER	VERT.
A 5 19		28	4 - 0			BOX DOWELS - AT WING FOOTINGS	HORIZ.
A 4 20		78	5 - 6	X		WING - CUTOFF WALL	VERT.
A 4 21		10	19 - 3			WING FOOTING - WINGS 1 & 3	LONG.
A 4 22		10	18 - 0			WING FOOTING - WINGS 2 & 4	LONG.
A 4 23		84	6 - 2			WING FOOTING - BOTTOM	TRANS.
A 6 24		164	6 - 2			WING FOOTING - TOP	TRANS.
⚠ A 4 25		20	17 - 5		X	WING FOOTING - WINGS 1 & 3	LONG.
⚠ A 4 26		20	19 - 9		X	WING FOOTING - WINGS 2 & 4	LONG.
A 4 27		80	3 - 5	X		WING - DOWEL - FF	VERT.
A 6 28		82	4 - 4	X		WING - DOWEL - BF	VERT.
A 4 29		20	8 - 7			WING STEM - WING 1 - FF	VERT.
A 6 30		20	8 - 7			WING STEM - WING 1 - BF	VERT.
A 4 31		14	18 - 5			WING STEM - WINGS 1 & 3 - FF	LONG.
A 4 32		14	17 - 10			WING STEM - WINGS 1 & 3 - BF	LONG.
A 4 33		20	9 - 5			WING STEM - WING 2 - FF	VERT.
A 6 34		21	9 - 5			WING STEM - WING 2 - BF	VERT.
A 4 35		16	18 - 9			WING STEM - WINGS 2 & 4 - FF	LONG.
A 4 36		16	19 - 3			WING STEM - WINGS 2 & 4 - BF	LONG.
A 4 37		20	8 - 8			WING STEM - WING 3 - FF	VERT.
A 6 38		20	8 - 8			WING STEM - WING 3 - BF	VERT.
A 4 39		20	9 - 4			WING STEM - WING 4 - FF	VERT.
A 6 40		21	9 - 4			WING STEM - WING 4 - BF	VERT.

FF - FRONT FACE
BF - BACK FACE
EF - EACH FACE

BAR DIMENSIONS IN BENDING ARE OUT TO OUT OF BARS.

ALL REINFORCING BARS ARE ENGLISH.

THE FIRST OR FIRST TWO DIGITS OF THE BAR MARK SIGNIFIES THE BAR SIZE.

⚠ LENGTH SHOWN IS AN AVERAGE LENGTH FOR USE CALCULATING BAR WEIGHT ONLY. SEE BAR SERIES TABLE FOR ACTUAL LENGTHS.

TAG AND BUNDLE EACH SERIES SEPERATELY.

BAR SERIES TABLE ⚠

MARK	NO. REQ'D	LENGTHS FOR EACH SERIES
A403	4 SERIES OF 10	1'-8" TO 9'-1"
A406	4 SERIES OF 5	8'-7" TO 11'-10"
A425	4 SERIES OF 5	15'-8" TO 19'-2"
A426	4 SERIES OF 5	18'-0" TO 21'-6"

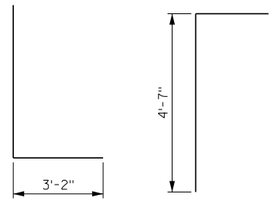

A501

A412

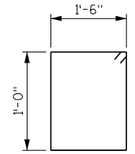

A315

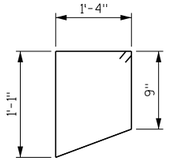

A317

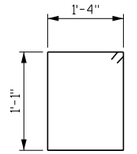

A318

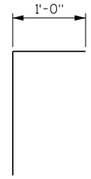

A420

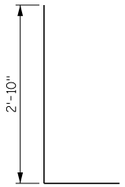

A427

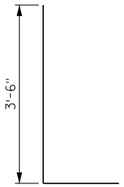

A628

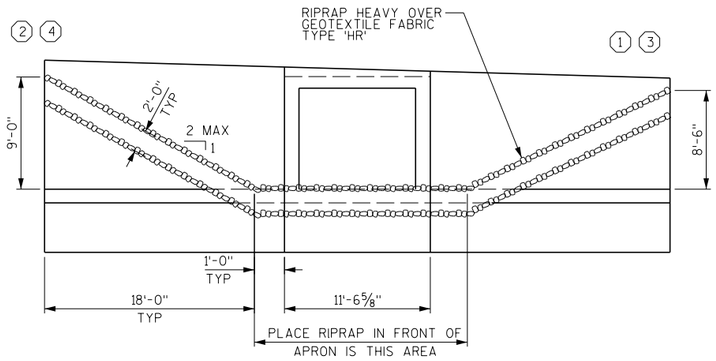

RIPRAP PLACEMENT DETAIL

DIMENSIONS GIVEN ALONG FF OF WINGS AND BOX

NO.	DATE	REVISION	BY

STATE OF WISCONSIN
DEPARTMENT OF TRANSPORTATION
STRUCTURES DESIGN SECTION

STRUCTURE C-47-234

DRAWN BY MJB | PLANS CK'D. GAR

DETAILS & BILL OF BARS

SHEET 7 OF 7
202

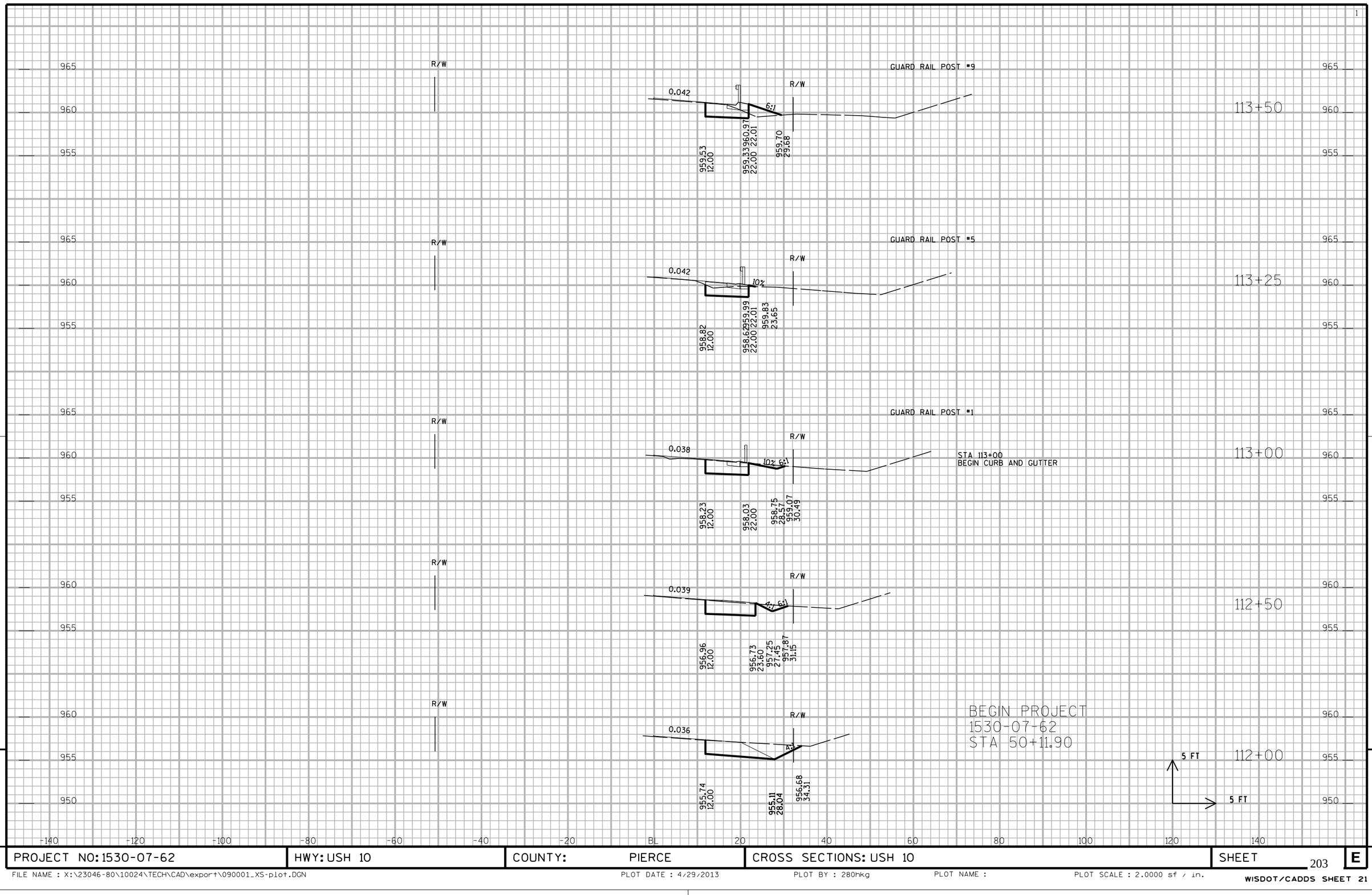

9

9

PROJECT NO: 1530-07-62	HWY: USH 10	COUNTY: PIERCE	CROSS SECTIONS: USH 10	SHEET 203	E

FILE NAME : X:\23046-80\10024\TECH\CAD\export\090001_XS-plot.DGN PLOT DATE : 4/29/2013 PLOT BY : 280hkg PLOT NAME : PLOT SCALE : 2.0000 sf / in.

WISDOT/CADDS SHEET 21

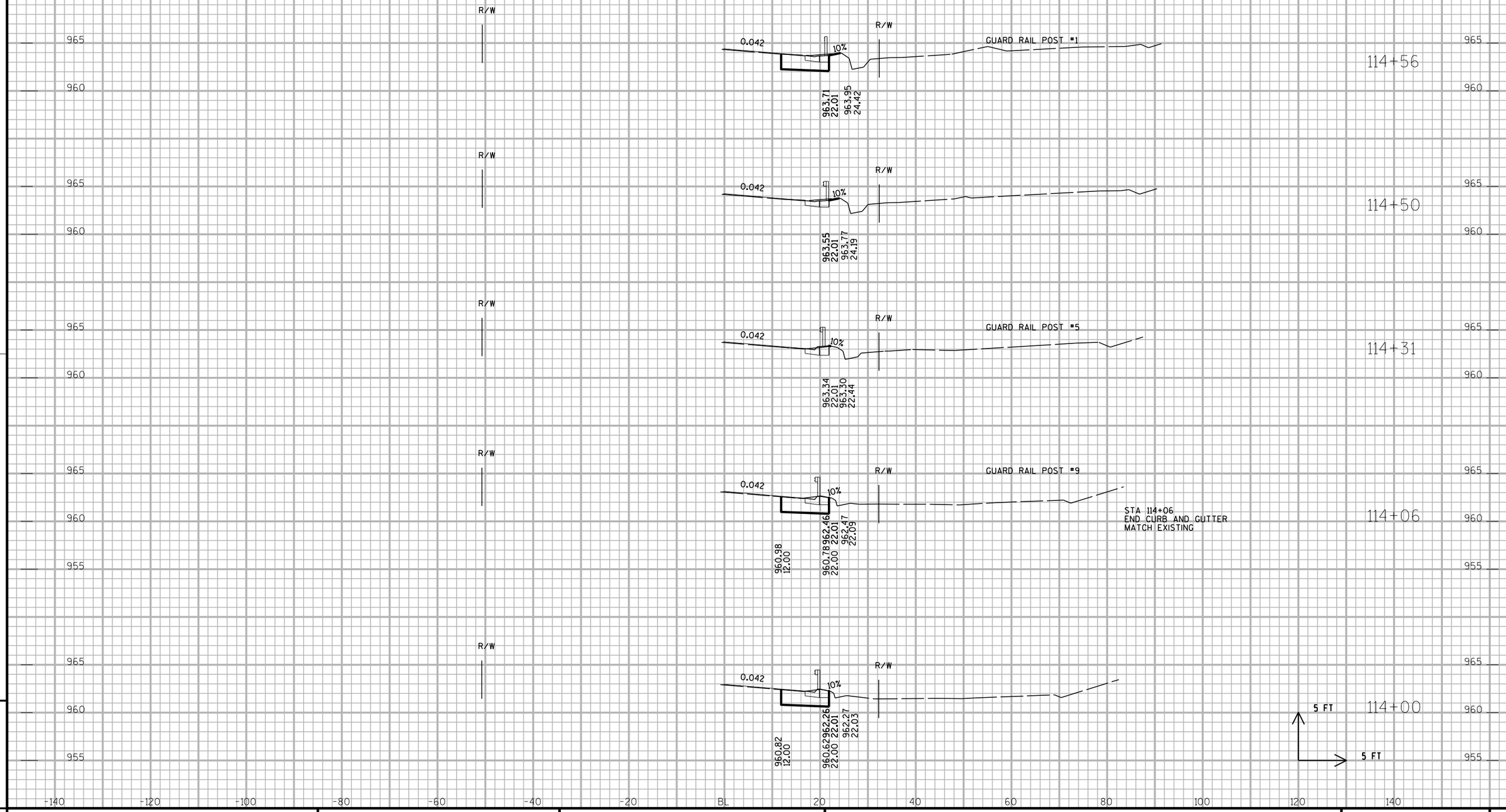

9

9

PROJECT NO: 1530-07-62	HWY: USH 10	COUNTY: PIERCE	CROSS SECTIONS: USH 10	SHEET 204	E

FILE NAME : X:\23046-80\10024\TECH\CAD\export\090001_XS-plot.DGN PLOT DATE : 4/29/2013 PLOT BY : 280hkg PLOT NAME : PLOT SCALE : 2.0000 sf / in.

WISDOT/CADDS SHEET 21

115+50

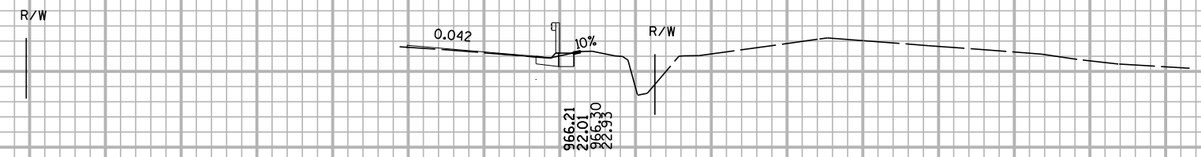

GUARD RAIL POST #9

115+46

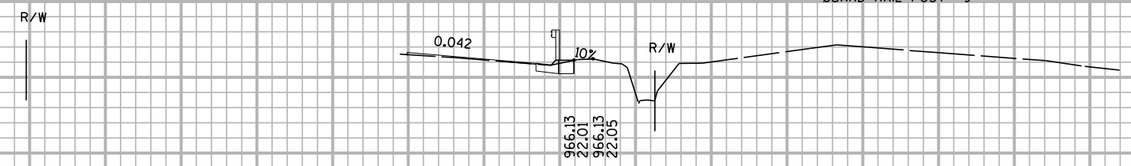

GUARD RAIL POST #5

115+21

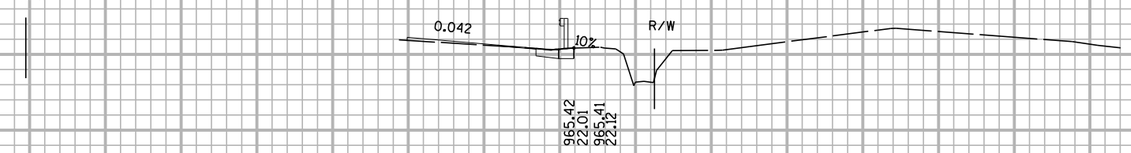

115+00

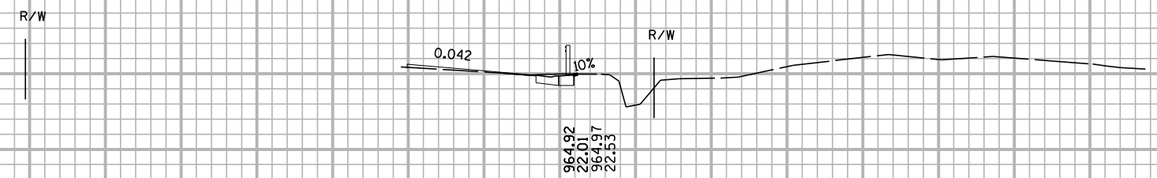

GUARD RAIL POST #1

114+96

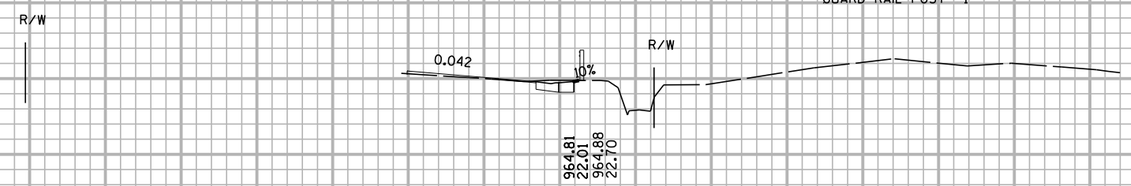

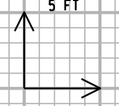

965 960 970

-140 -120 -100 -80 -60 -40 -20 BL 20 40 60 80 100 120 140

9

PROJECT NO: 1530-07-62	HWY: USH 10	COUNTY: PIERCE	CROSS SECTIONS: USH 10	SHEET 205	E

FILE NAME : X:\23046-80\10024\TECH\CAD\export\090001_XS-plot.DGN PLOT DATE : 4/29/2013 PLOT BY : 280hkg PLOT NAME : PLOT SCALE : 2.0000 sf / in.

WISDOT/CADDS SHEET 21

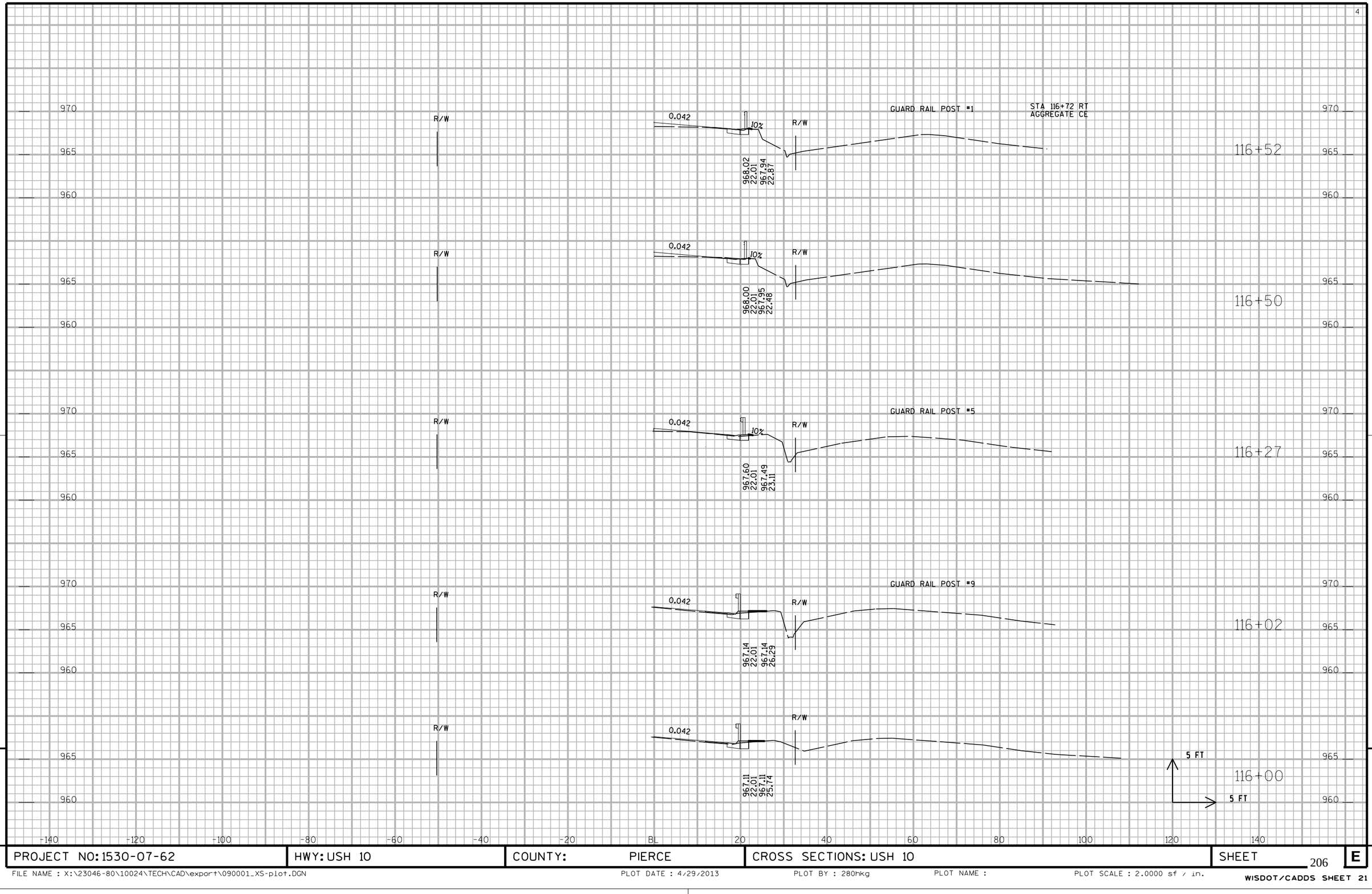

9

9

PROJECT NO: 1530-07-62	HWY: USH 10	COUNTY: PIERCE	CROSS SECTIONS: USH 10	SHEET 206	E

FILE NAME : X:\23046-80\10024\TECH\CAD\export\090001_XS-plot.DGN PLOT DATE : 4/29/2013 PLOT BY : 280hkg PLOT NAME : PLOT SCALE : 2.0000 sf / in.

WISDOT/CADDS SHEET 21

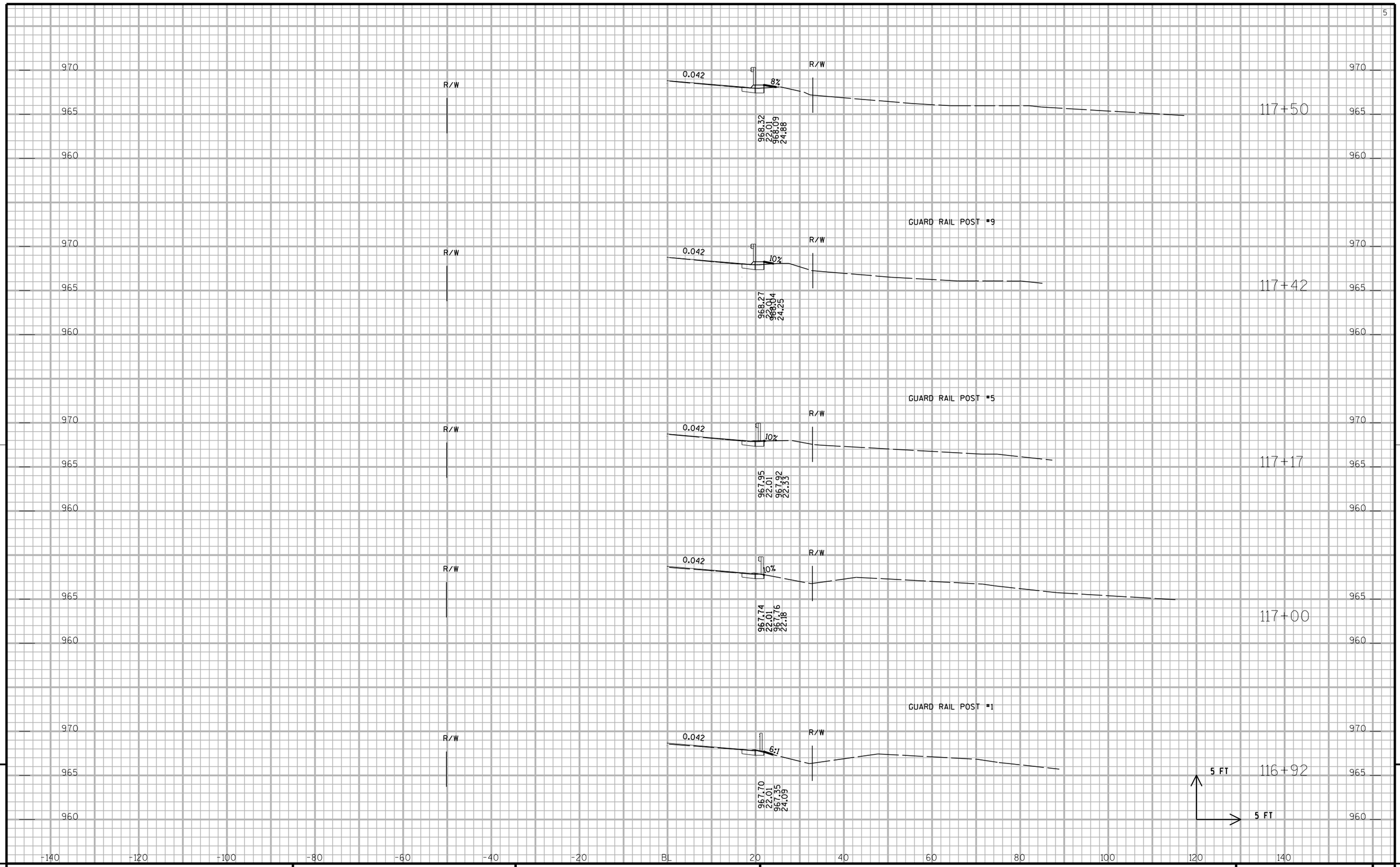

9

9

PROJECT NO: 1530-07-62	HWY: USH 10	COUNTY: PIERCE	CROSS SECTIONS: USH 10	SHEET 207	E

GUARD RAIL POST #1

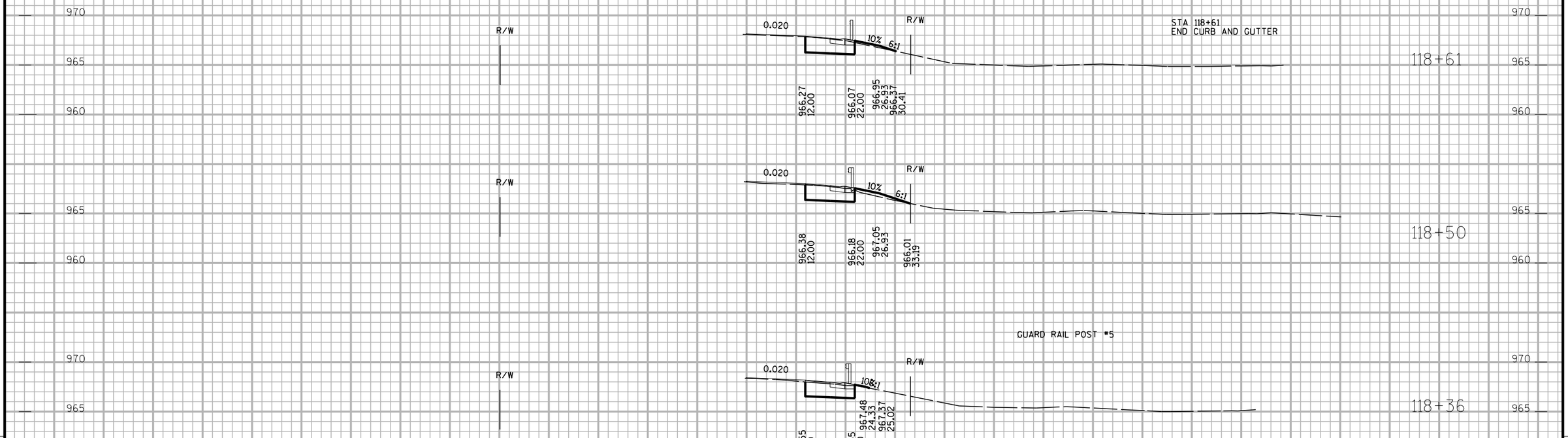

GUARD RAIL POST #5

GUARD RAIL POST #9

9

9

PROJECT NO: 1530-07-62	HWY: USH 10	COUNTY: PIERCE	CROSS SECTIONS: USH 10	SHEET 208	E

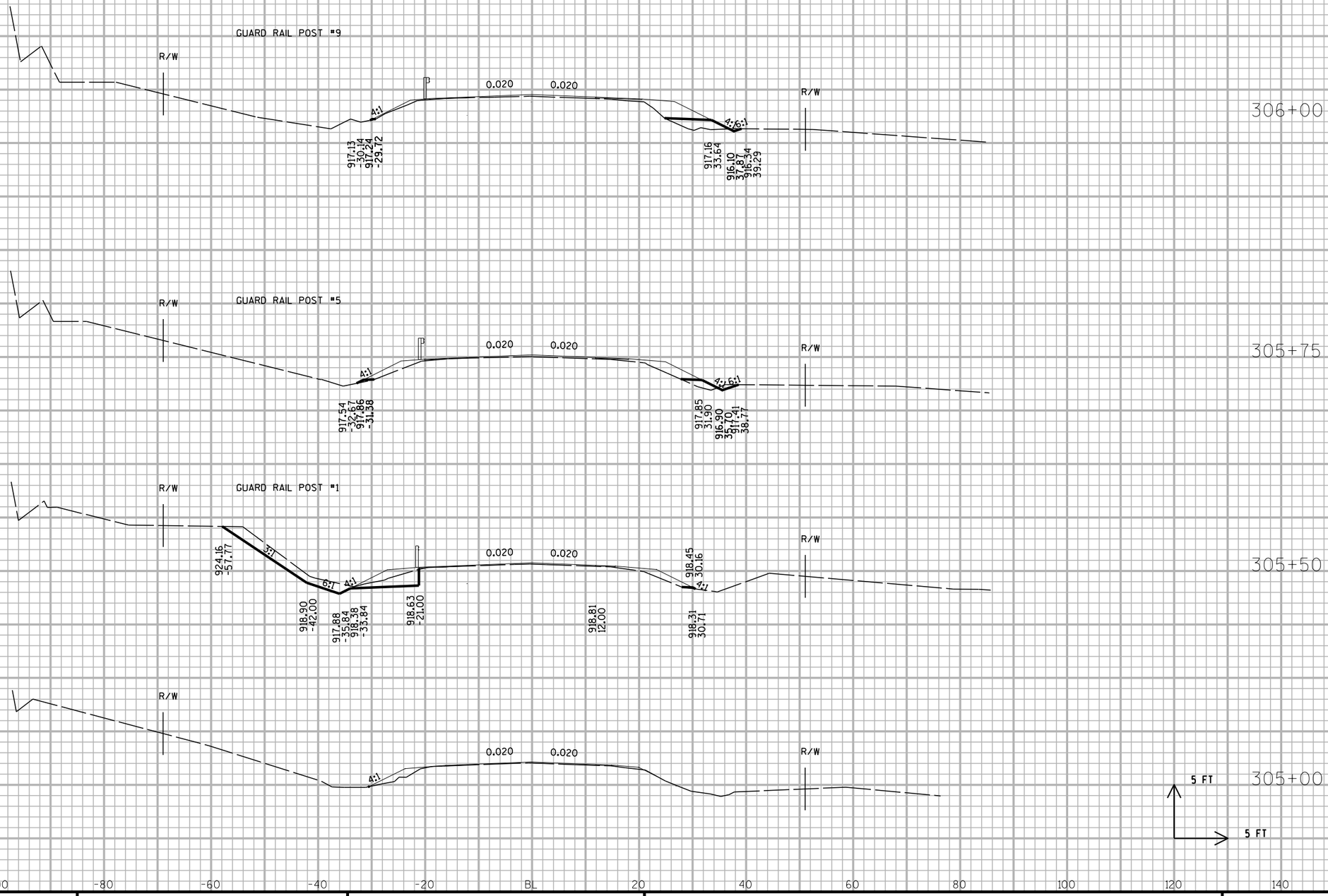

9

9

PROJECT NO: 1530-07-62	HWY: USH 10	COUNTY: PIERCE	CROSS SECTIONS: USH 10	SHEET 209	E

FILE NAME : X:\23046-80\10024\TECH\CAD\export\090001_XS-plot.DGN PLOT DATE : 4/29/2013 PLOT BY : 280hkg PLOT NAME : PLOT SCALE : 2.0000 sf / in.

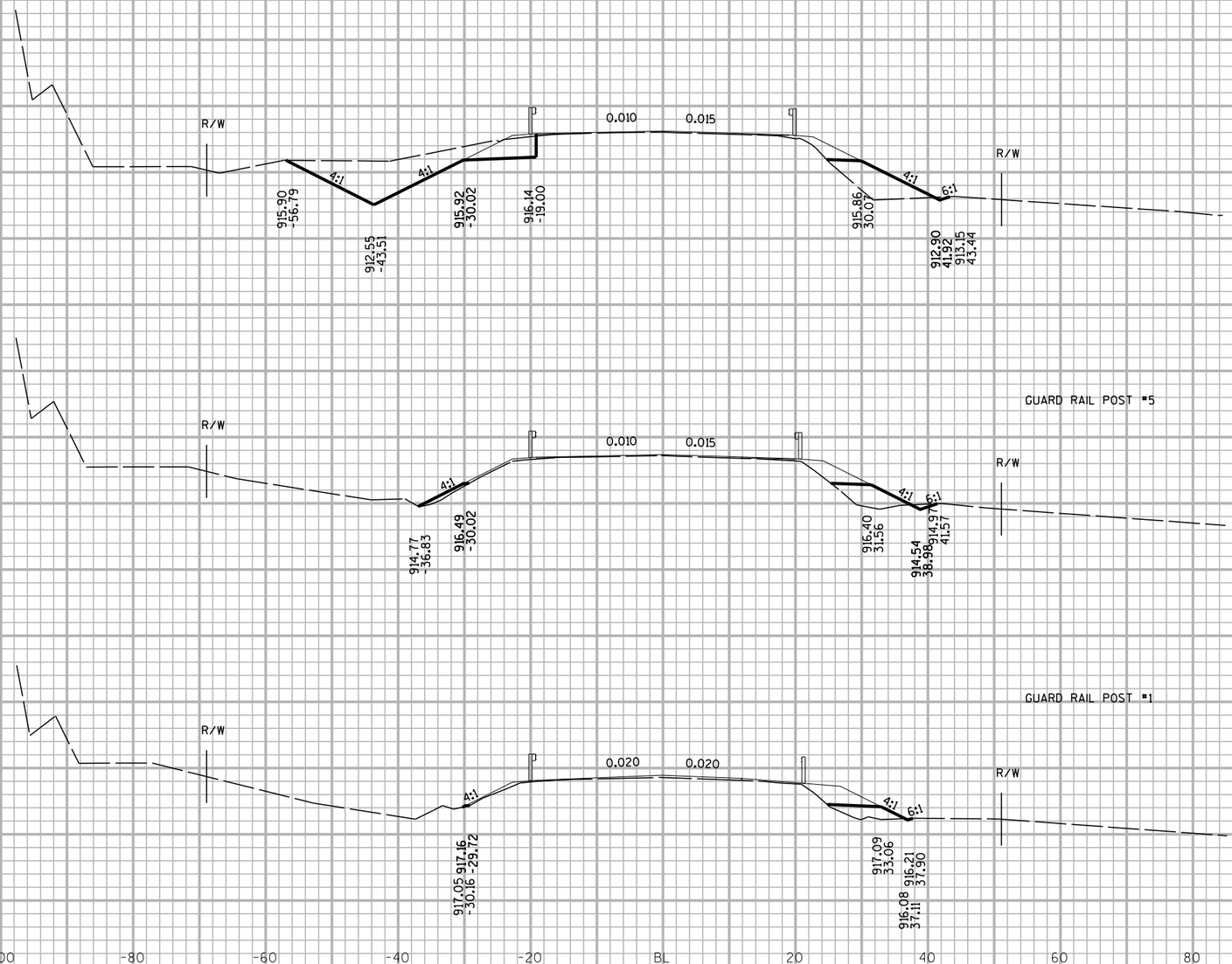

9

9

PROJECT NO: 1530-07-62	HWY: USH 10	COUNTY: PIERCE	CROSS SECTIONS: USH 10	SHEET 210	E

FILE NAME : X:\23046-80\10024\TECH\CAD\export\090001_XS-plot.DGN PLOT DATE : 4/29/2013 PLOT BY : 280hkg PLOT NAME : PLOT SCALE : 2.0000 sf / in.

WISDOT/CADDS SHEET 21

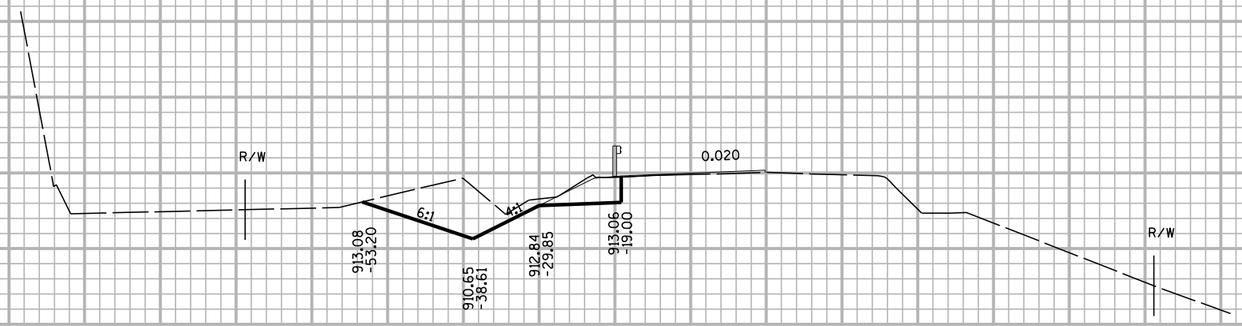

PROJECT NO: 1530-07-62	HWY: USH 10	COUNTY: PIERCE	CROSS SECTIONS: USH 10	SHEET 211	E

FILE NAME : X:\23046-80\10024\TECH\CAD\export\090001_XS-plot.DGN PLOT DATE : 4/29/2013 PLOT BY : 280hkg PLOT NAME : PLOT SCALE : 2.0000 sf / in.

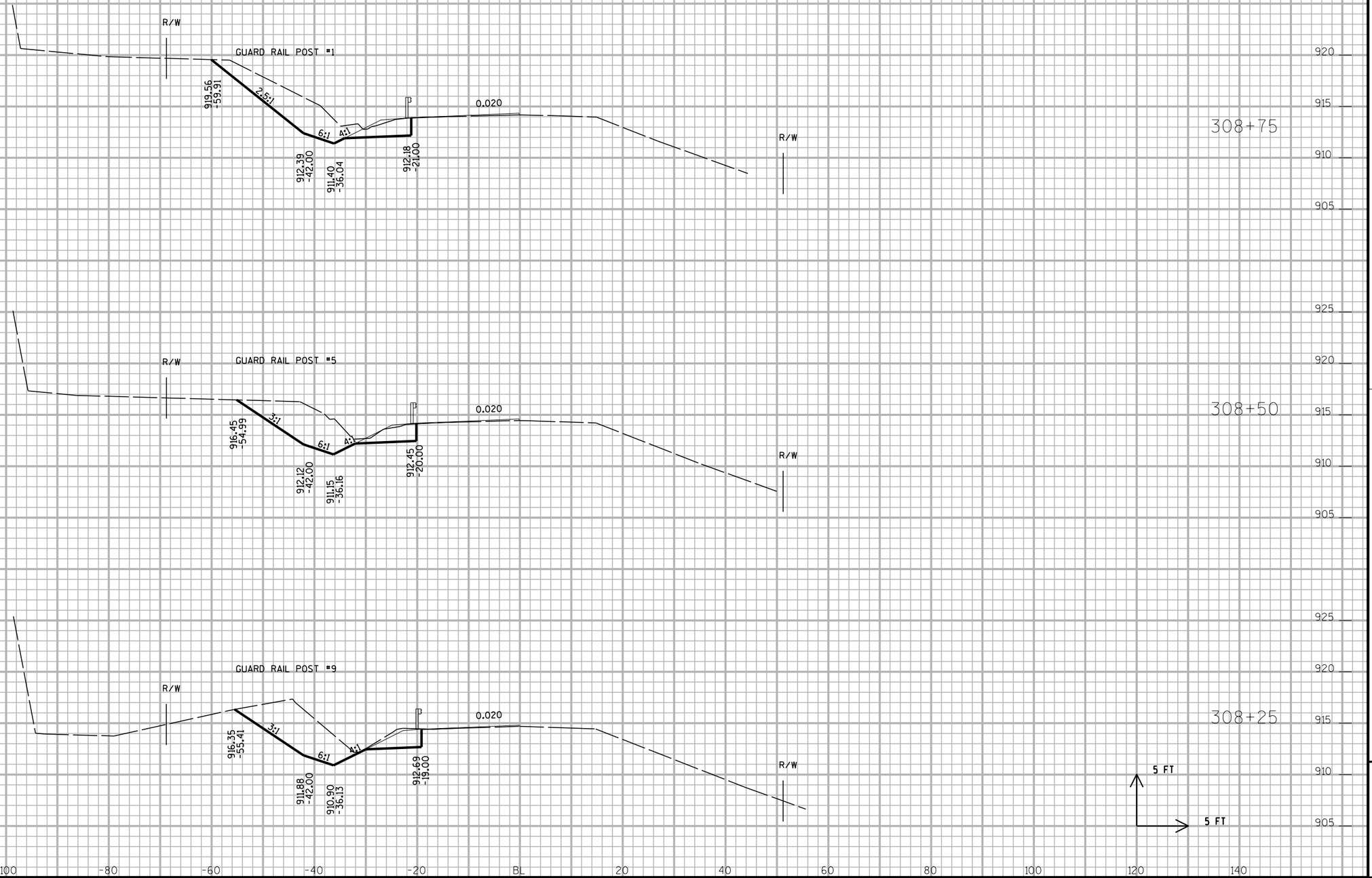

9

9

PROJECT NO: 1530-07-62	HWY: USH 10	COUNTY: PIERCE	CROSS SECTIONS: USH 10	SHEET 212	E

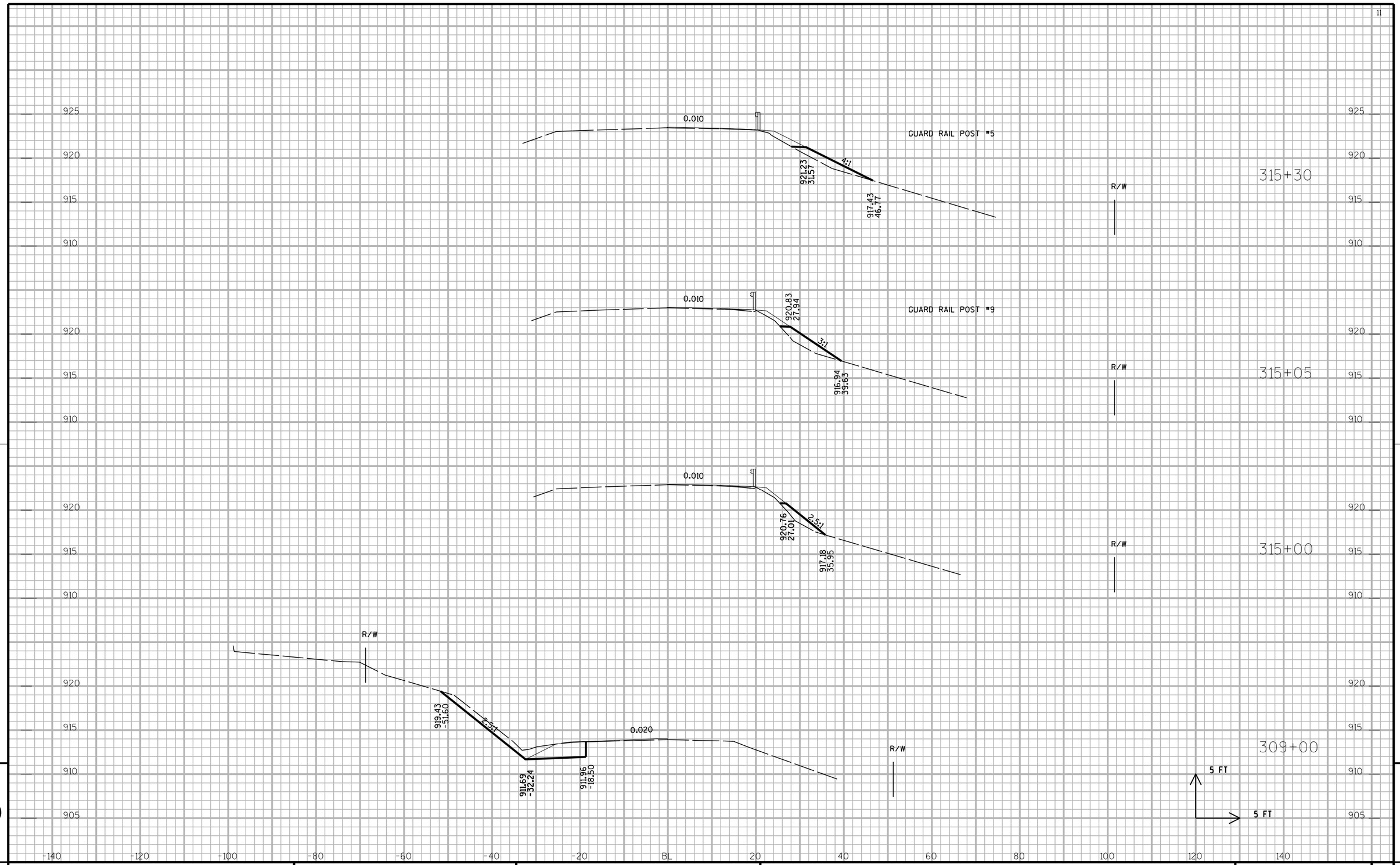

9

9

PROJECT NO: 1530-07-62	HWY: USH 10	COUNTY: PIERCE	CROSS SECTIONS: USH 10	SHEET 213	E

FILE NAME : X:\23046-80\10024\TECH\CAD\export\090001_XS-plot.DGN PLOT DATE : 4/29/2013 PLOT BY : 280hkg PLOT NAME : PLOT SCALE : 2.0000 sf / in.

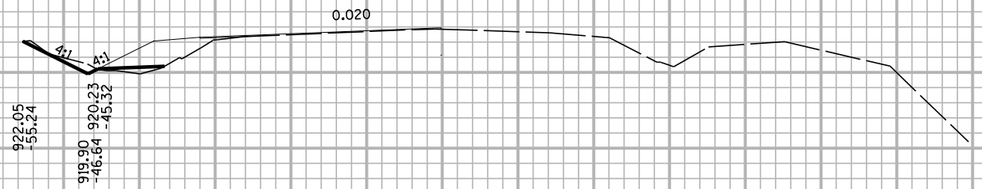

R/W

319+00

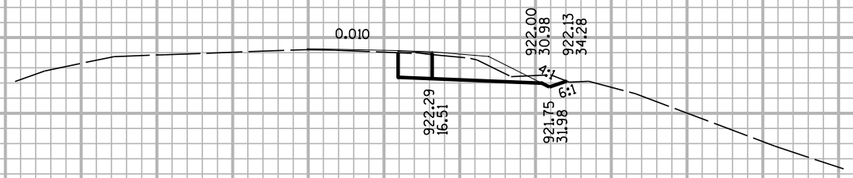

R/W

316+00

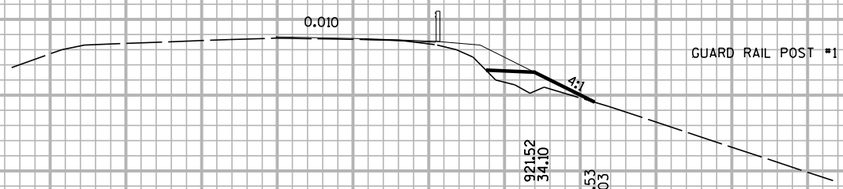

R/W

315+55

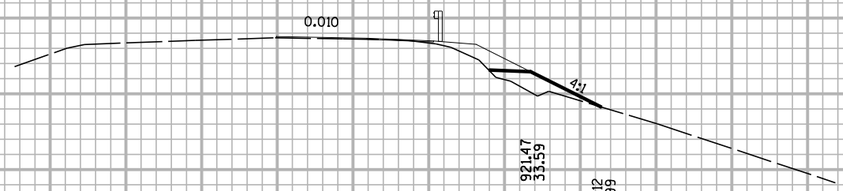

R/W

315+50

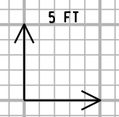

925 920 915 910

-140 -120 -100 -80 -60 -40 -20 BL 20 40 60 80 100 120 140

9

9

PROJECT NO: 1530-07-62	HWY: USH 10	COUNTY: PIERCE	CROSS SECTIONS: USH 10	SHEET 214	E

FILE NAME : X:\23046-80\10024\TECH\CAD\export\090001_XS-plot.DGN PLOT DATE : 4/29/2013 PLOT BY : 280hkg PLOT NAME : PLOT SCALE : 2.0000 sf / in.

WISDOT/CADDS SHEET 21

GUARD RAIL POST #9

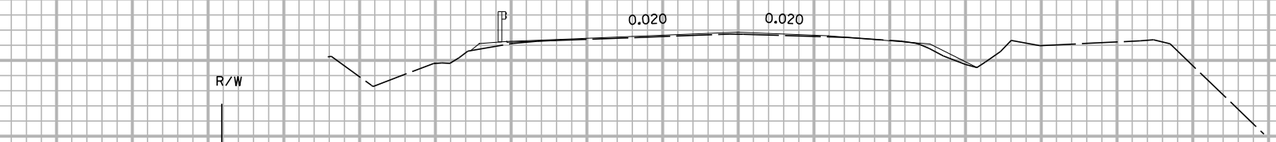

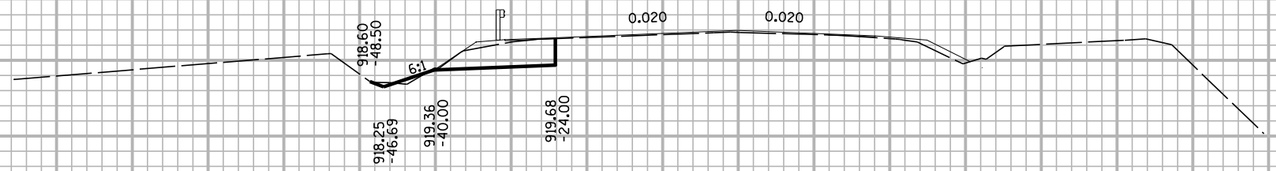

GUARD RAIL POST #5

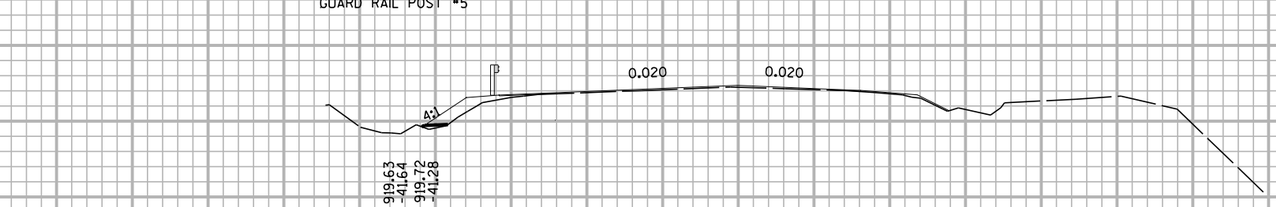

GUARD RAIL POST #1

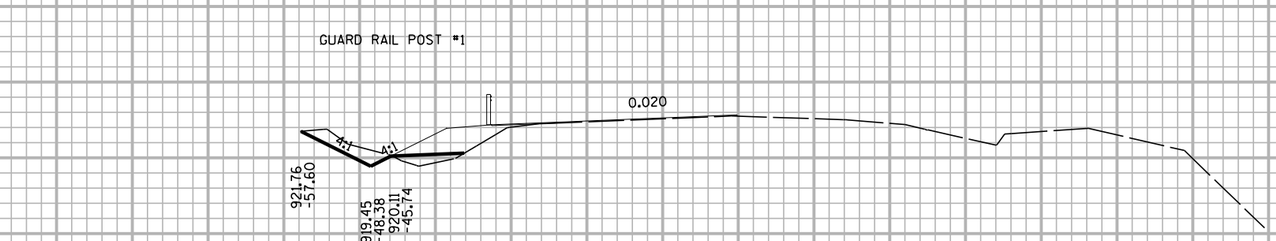

-140 -120 -100 -80 -60 -40 -20 BL 20 40 60 80 100 120 140

9 9

PROJECT NO: 1530-07-62	HWY: USH 10	COUNTY: PIERCE	CROSS SECTIONS: USH 10	SHEET 215	E

FILE NAME : X:\23046-80\10024\TECH\CAD\export\090001_XS-plot.DGN PLOT DATE : 4/29/2013 PLOT BY : 280hkg PLOT NAME : PLOT SCALE : 2.0000 sf / in.

WISDOT/CADDS SHEET 21

GUARD RAIL POST #9

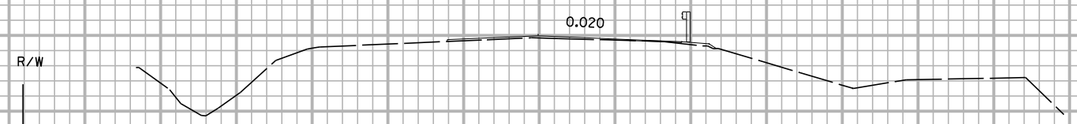

GUARD RAIL POST #5

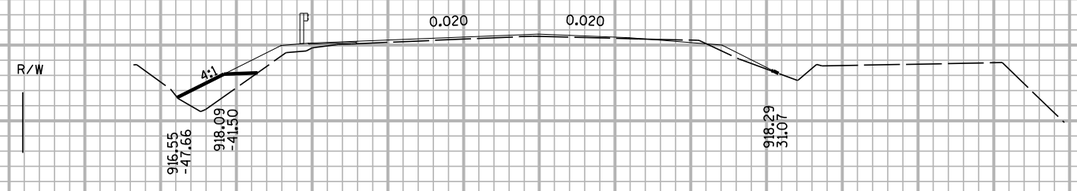

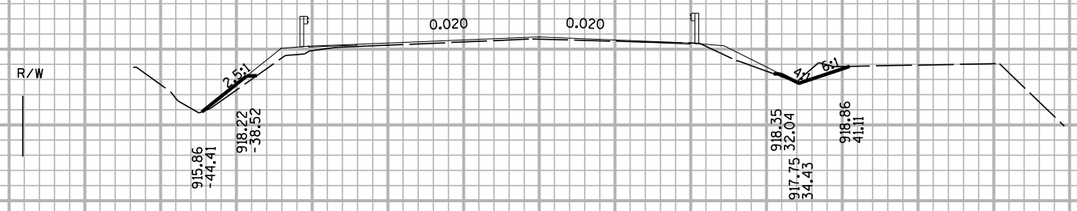

GUARD RAIL POST #1

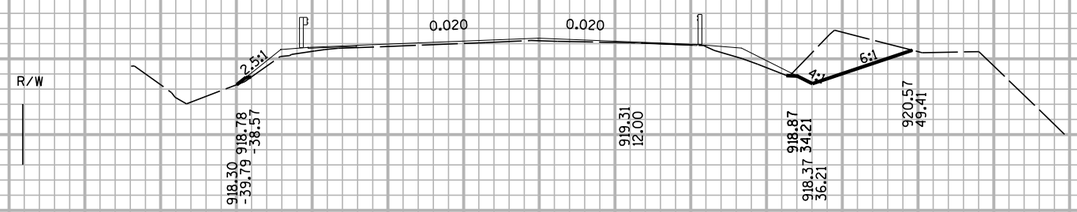

-140 -120 -100 -80 -60 -40 -20 BL 20 40 60 80 100 120 140

9 9

PROJECT NO: 1530-07-62	HWY: USH 10	COUNTY: PIERCE	CROSS SECTIONS: USH 10	SHEET 216	E

GUARD RAIL POST #5

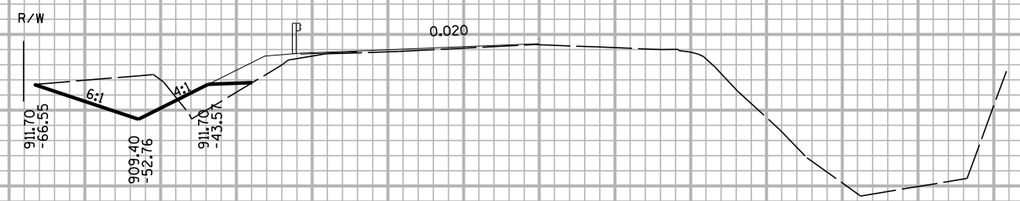

GUARD RAIL POST #9

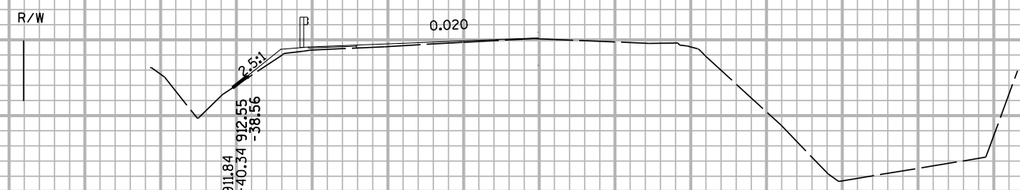

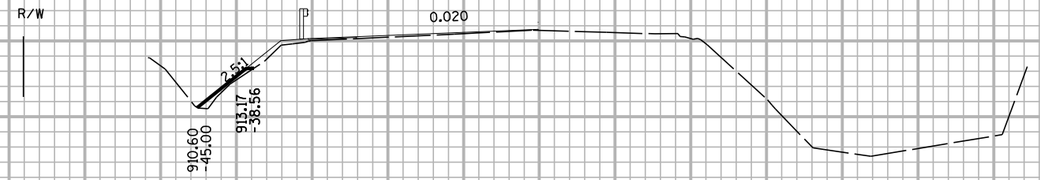

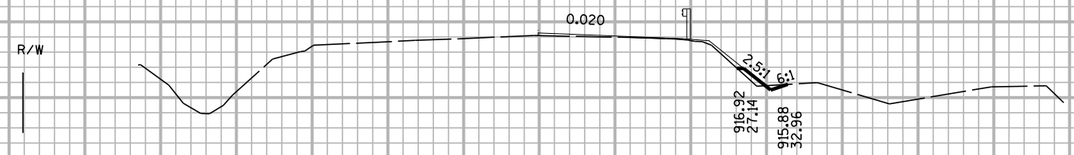

-140 -120 -100 -80 -60 -40 -20 BL 20 40 60 80 100 120 140

PROJECT NO: 1530-07-62	HWY: USH 10	COUNTY: PIERCE	CROSS SECTIONS: USH 10	SHEET 217	E

FILE NAME : X:\23046-80\10024\TECH\CAD\export\090001_XS-plot.DGN PLOT DATE : 4/29/2013 PLOT BY : 280hkg PLOT NAME : PLOT SCALE : 2.0000 sf / in.

WISDOT/CADDS SHEET 21

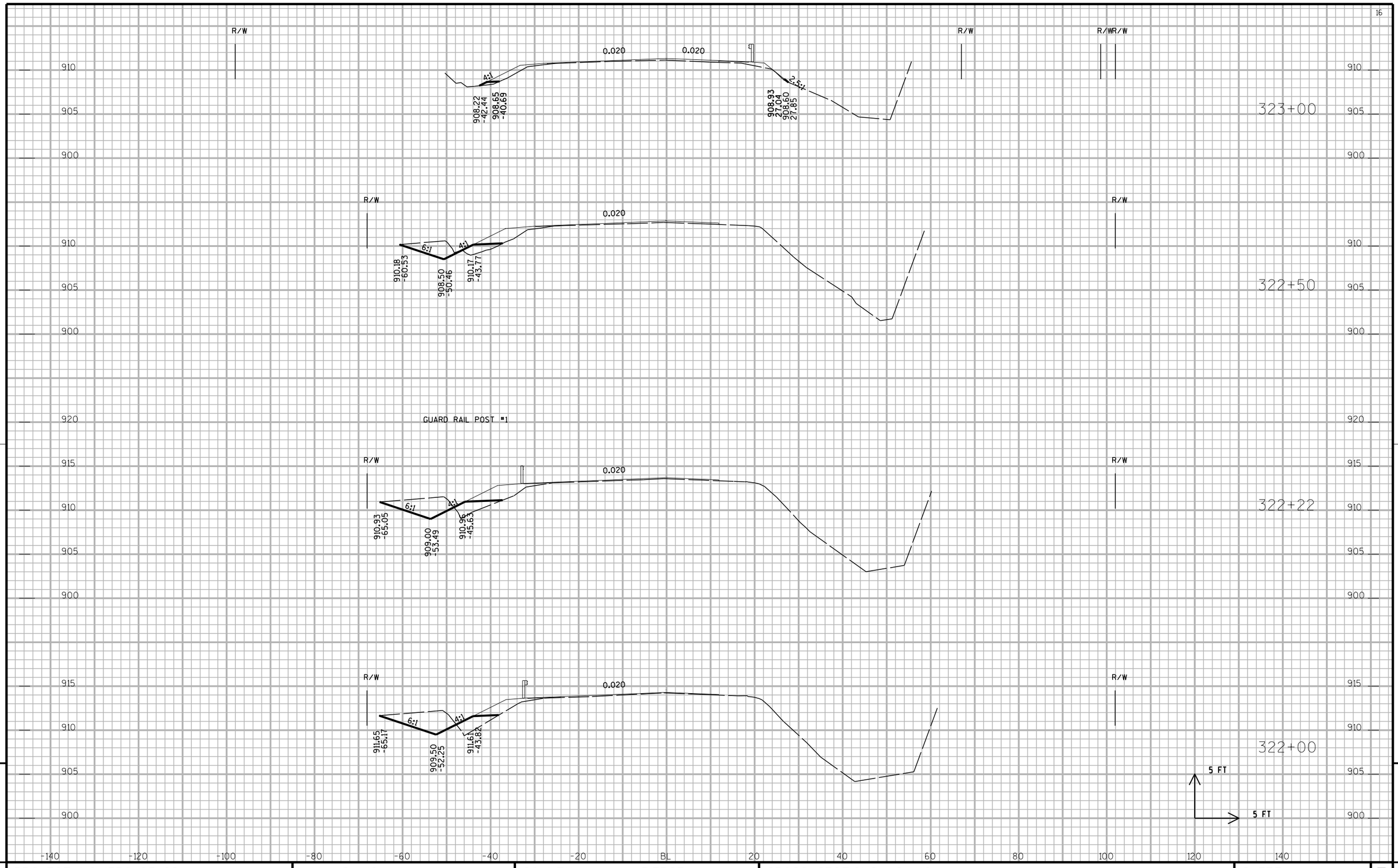

9

9

PROJECT NO: 1530-07-62	HWY: USH 10	COUNTY: PIERCE	CROSS SECTIONS: USH 10	SHEET 218	E

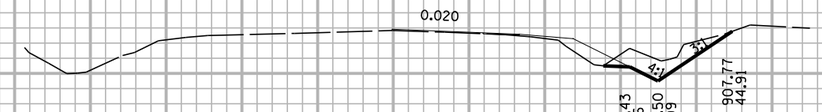

324+00

GUARD RAIL POST #1

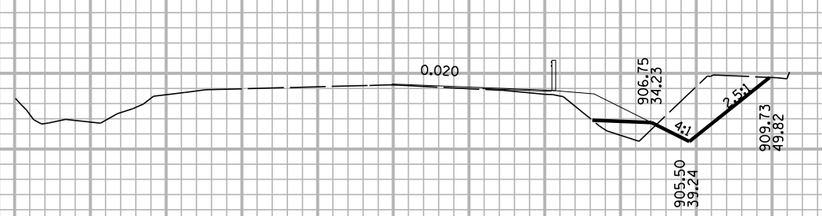

323+57

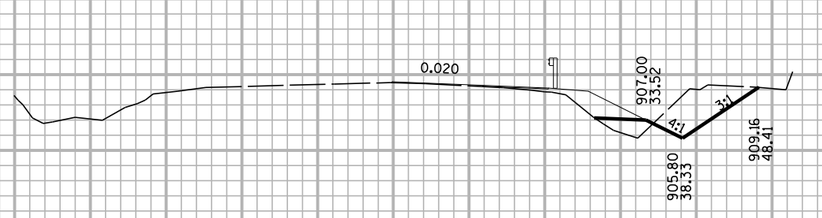

323+50

GUARD RAIL POST #5

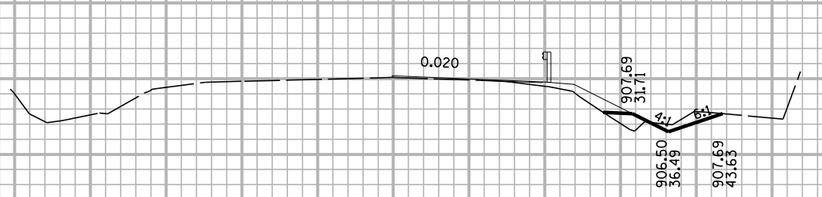

323+32

GUARD RAIL POST #9

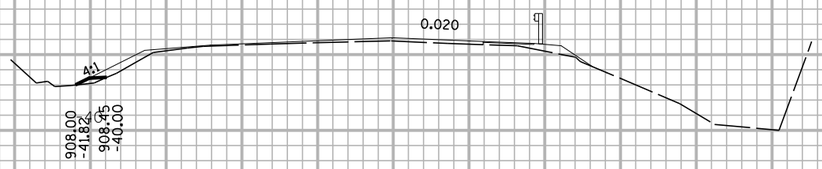

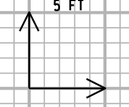

323+07

9

9

PROJECT NO: 1530-07-62	HWY: USH 10	COUNTY: PIERCE	CROSS SECTIONS: USH 10	SHEET 219	E

FILE NAME : X:\23046-80\10024\TECH\CAD\export\090001_XS-plot.DGN PLOT DATE : 4/29/2013 PLOT BY : 280hkg PLOT NAME : PLOT SCALE : 2.0000 sf / in.
WISDOT/CADDS SHEET 21

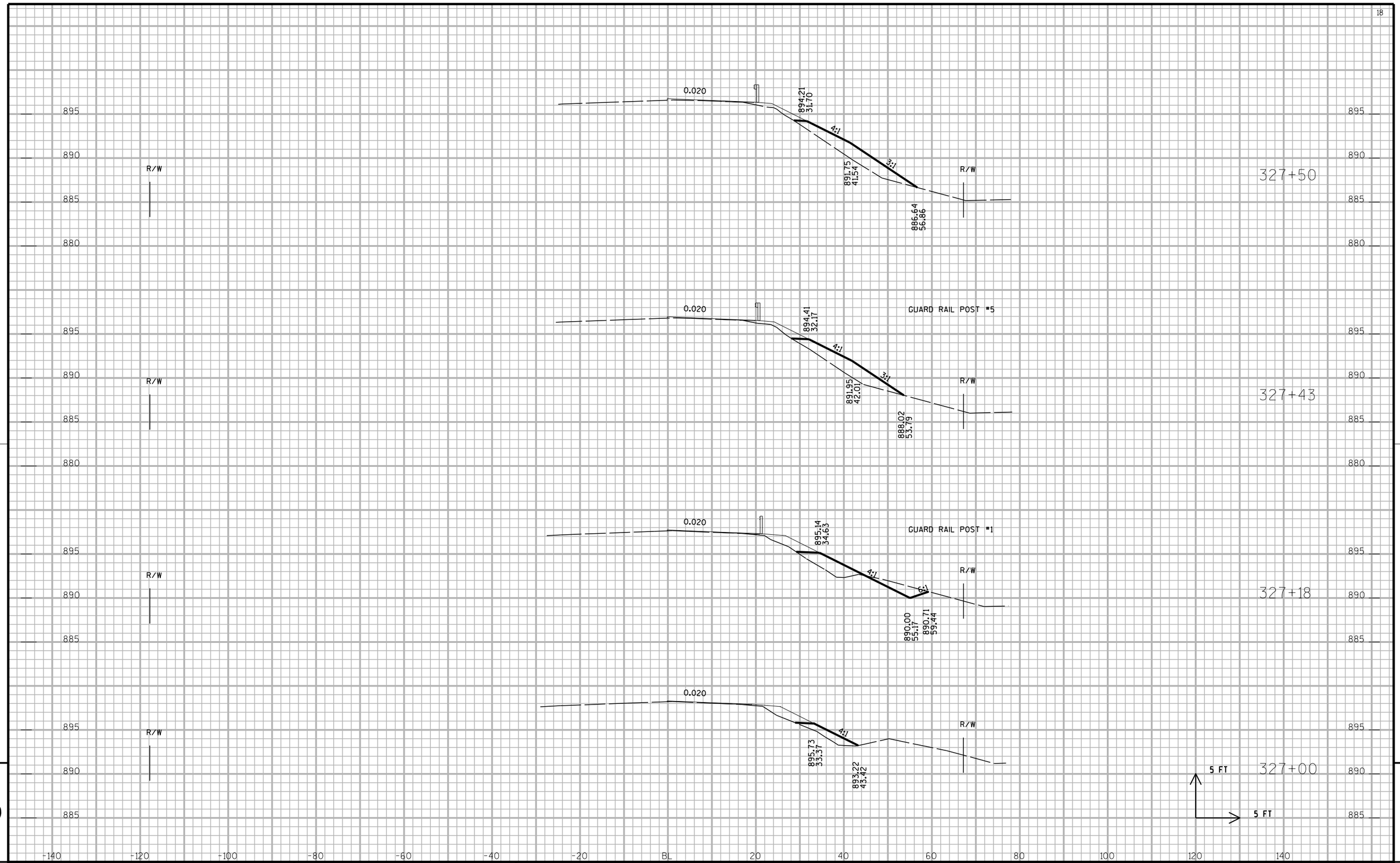

9

PROJECT NO: 1530-07-62	HWY: USH 10	COUNTY: PIERCE	CROSS SECTIONS: USH 10	SHEET 220	E

FILE NAME : X:\23046-80\10024\TECH\CAD\export\090001_XS-plot.DGN PLOT DATE : 4/29/2013 PLOT BY : 280hkg PLOT NAME : PLOT SCALE : 2.0000 sf / in.

GUARD RAIL POST #9

R/W

0.053

331+80

R/W

R/W

0.053

882.52
29.91

2.5:1

880.82
34.14

331+50

R/W

0.020

892.67
27.36

2.5:1

889.56
35.12

328+00

R/W

GUARD RAIL POST #9

0.020

883.72
28.38

3:1

891.05
36.39

327+68

R/W

5 FT

5 FT

890 885 880 875 895

-140 -120 -100 -80 -60 -40 -20 BL 20 40 60 80 100 120 140

9

9

PROJECT NO: 1530-07-62	HWY: USH 10	COUNTY: PIERCE	CROSS SECTIONS: USH 10	SHEET 221	E

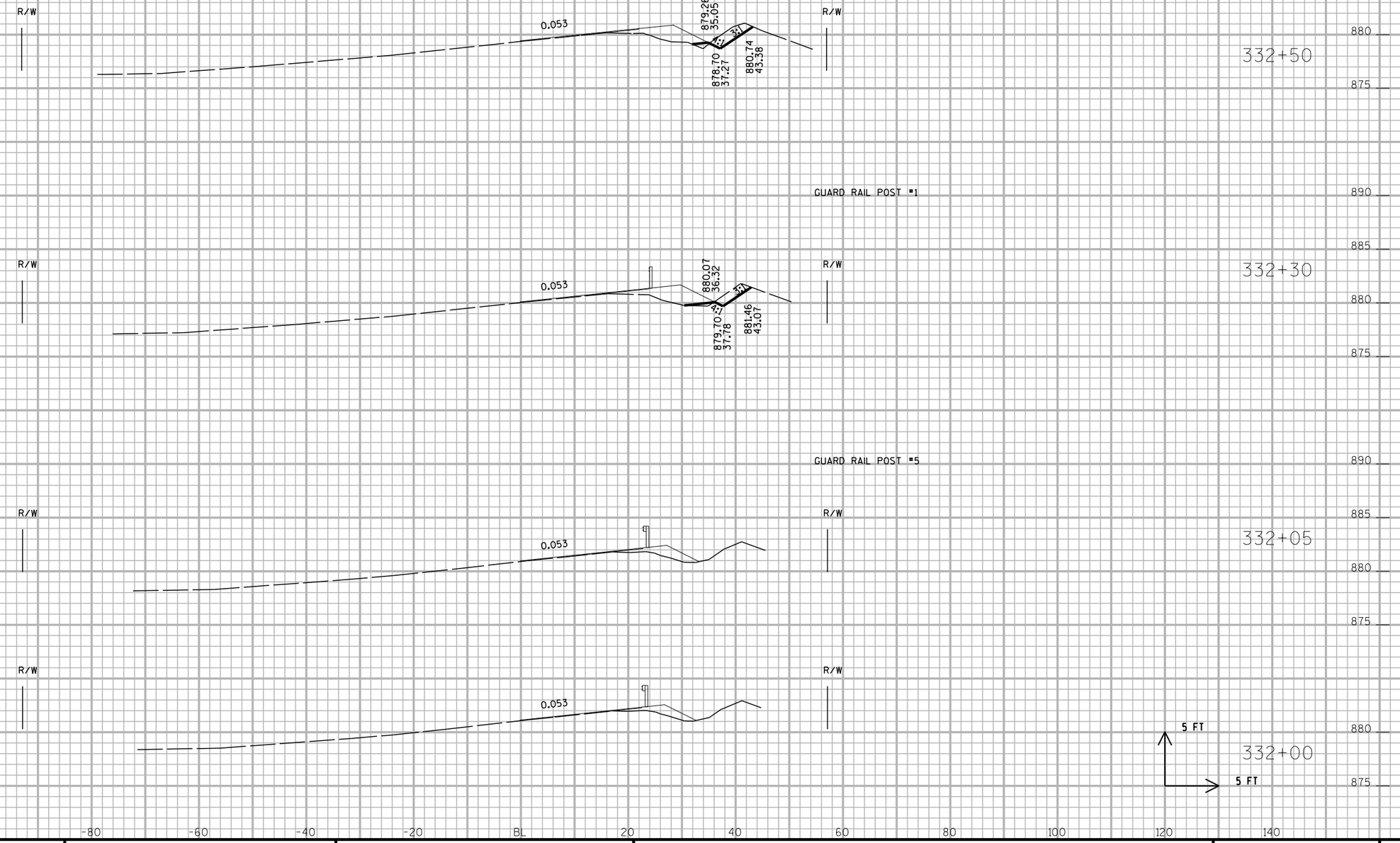

9

9

PROJECT NO: 1530-07-62	HWY: USH 10	COUNTY: PIERCE	CROSS SECTIONS: USH 10	SHEET 222	E

FILE NAME : X:\23046-80\10024\TECH\CAD\export\090001_XS-plot.DGN PLOT DATE : 4/29/2013 PLOT BY : 280hkg PLOT NAME : PLOT SCALE : 2.0000 sf / in.

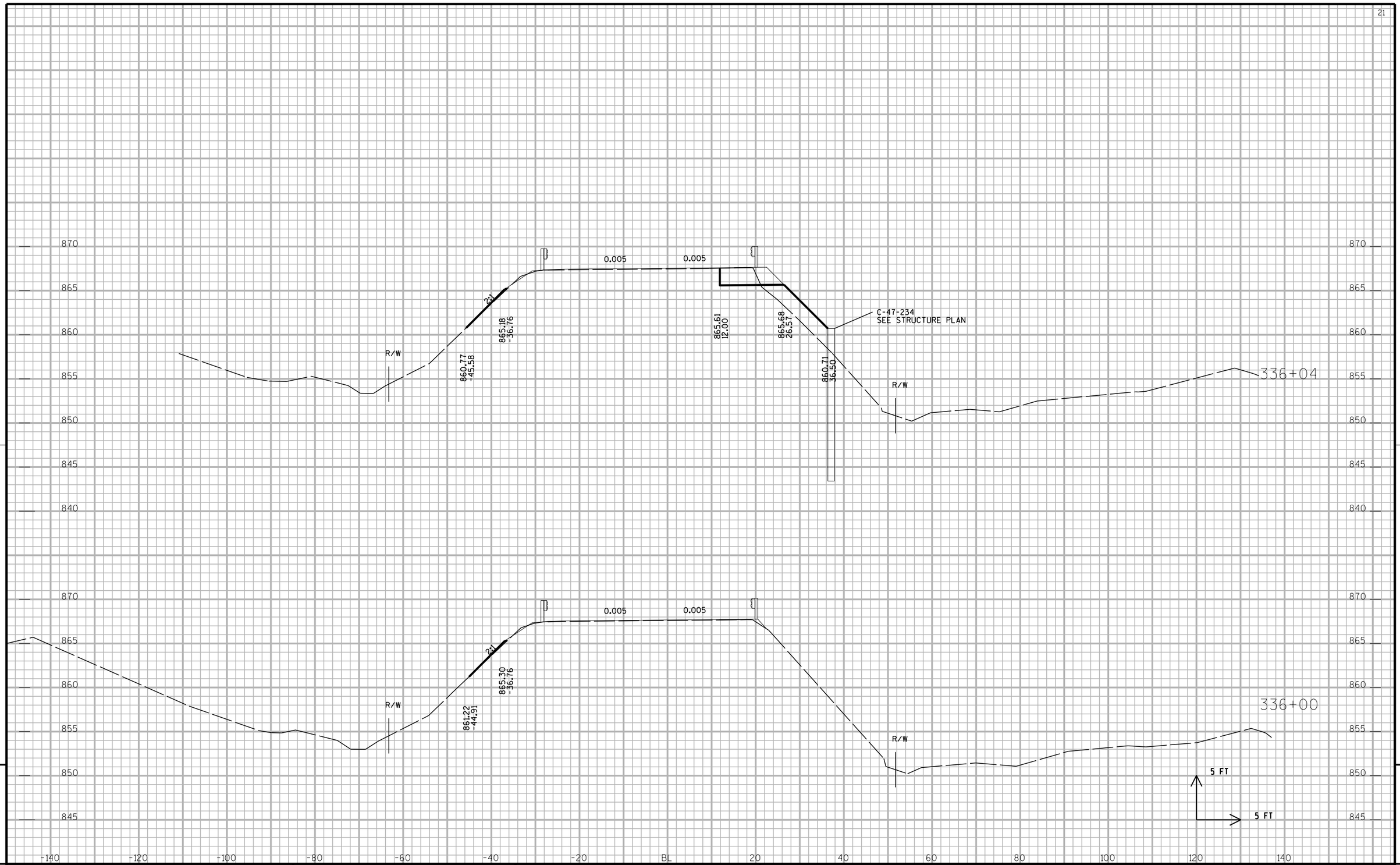

9

9

PROJECT NO: 1530-07-62	HWY: USH 10	COUNTY: PIERCE	CROSS SECTIONS: USH 10	SHEET 223	E

FILE NAME : X:\23046-80\10024\TECH\CAD\export\090001_XS-plot.DGN PLOT DATE : 4/29/2013 PLOT BY : 280hkg PLOT NAME : PLOT SCALE : 2.0000 sf / in.

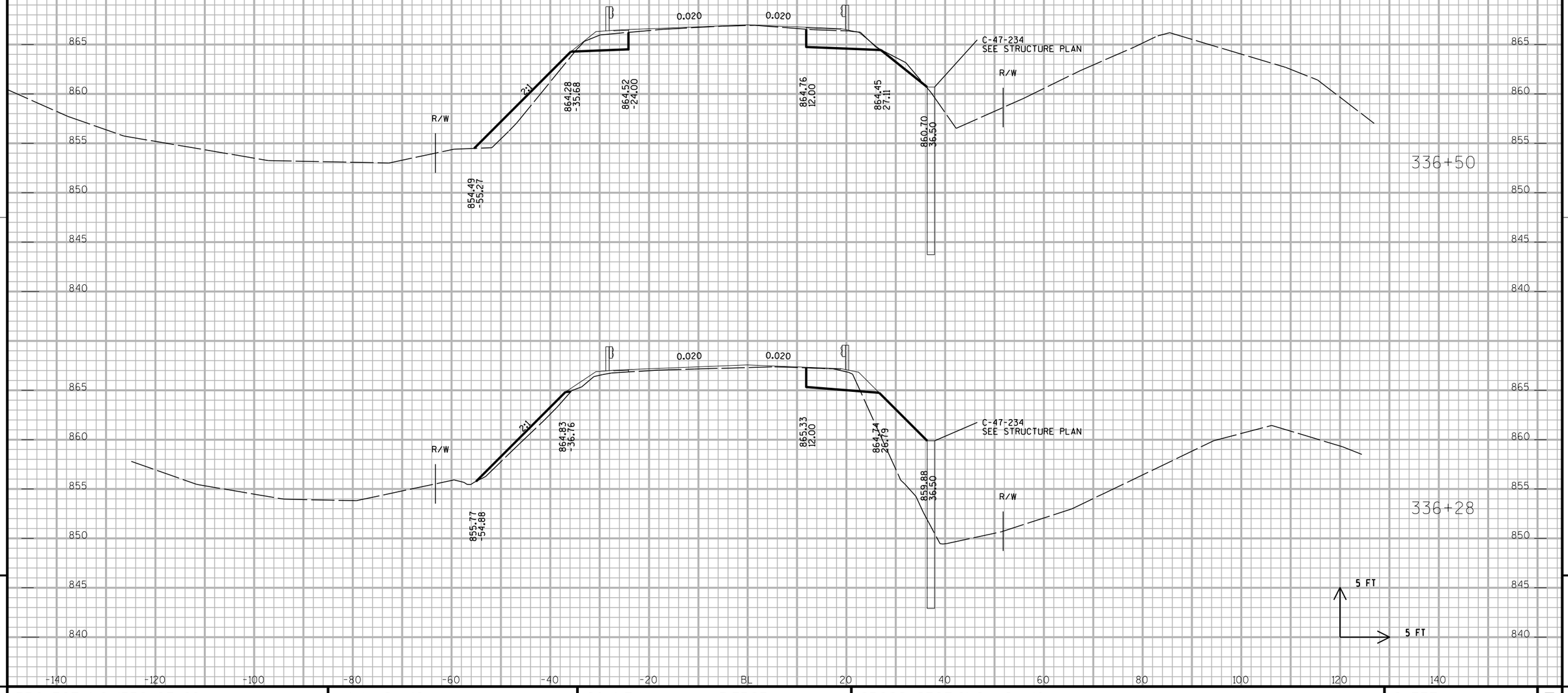

9

9

PROJECT NO: 1530-07-62	HWY: USH 10	COUNTY: PIERCE	CROSS SECTIONS: USH 10	SHEET 224	E

FILE NAME : X:\23046-80\10024\TECH\CAD\export\090001_XS-plot.DGN PLOT DATE : 4/29/2013 PLOT BY : 280hkg PLOT NAME : PLOT SCALE : 2.0000 sf / in.

WISDOT/CADDS SHEET 21

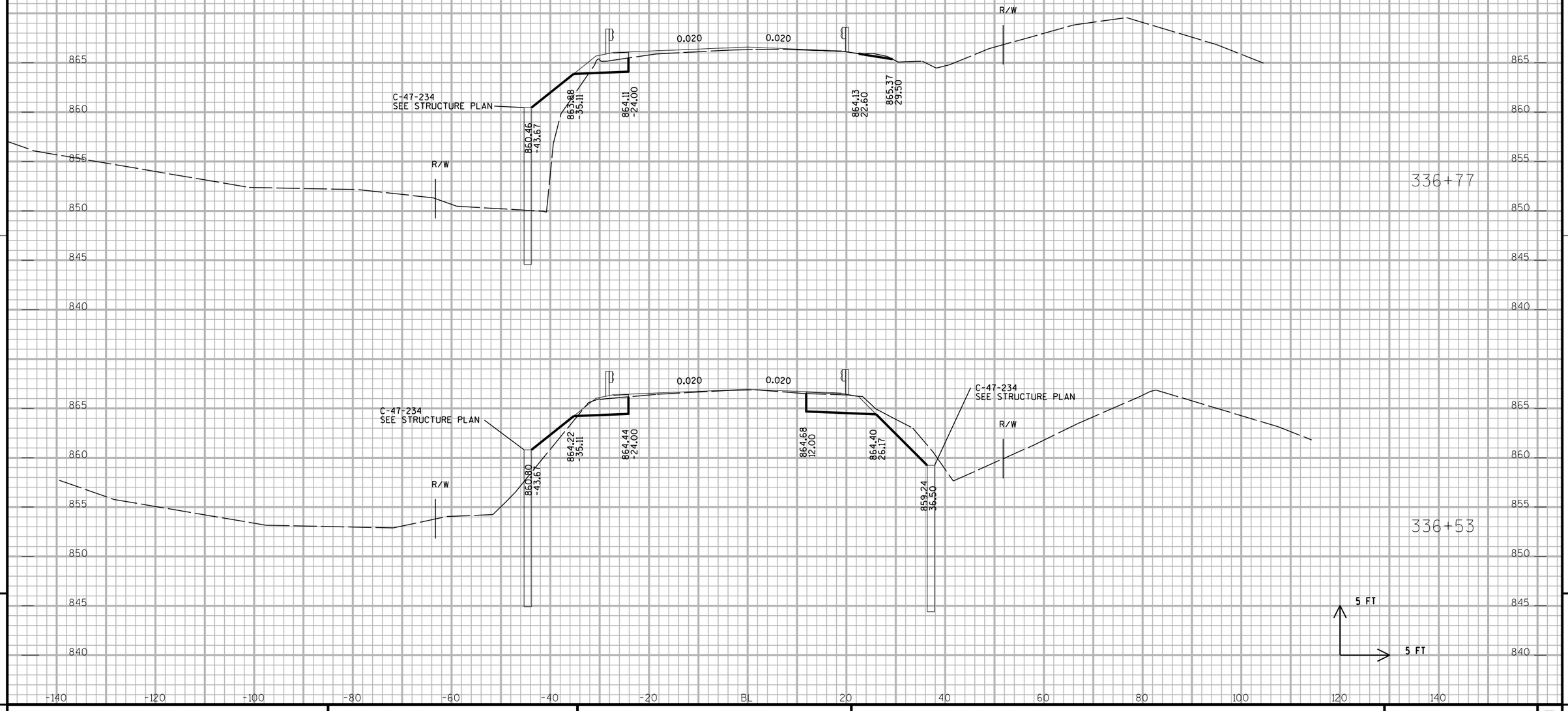

9

9

PROJECT NO: 1530-07-62	HWY: USH 10	COUNTY: PIERCE	CROSS SECTIONS: USH 10	SHEET 225	E

FILE NAME : X:\23046-80\10024\TECH\CAD\export\090001_XS-plot.DGN PLOT DATE : 4/29/2013 PLOT BY : 280hkg PLOT NAME : PLOT SCALE : 2.0000 sf / in.

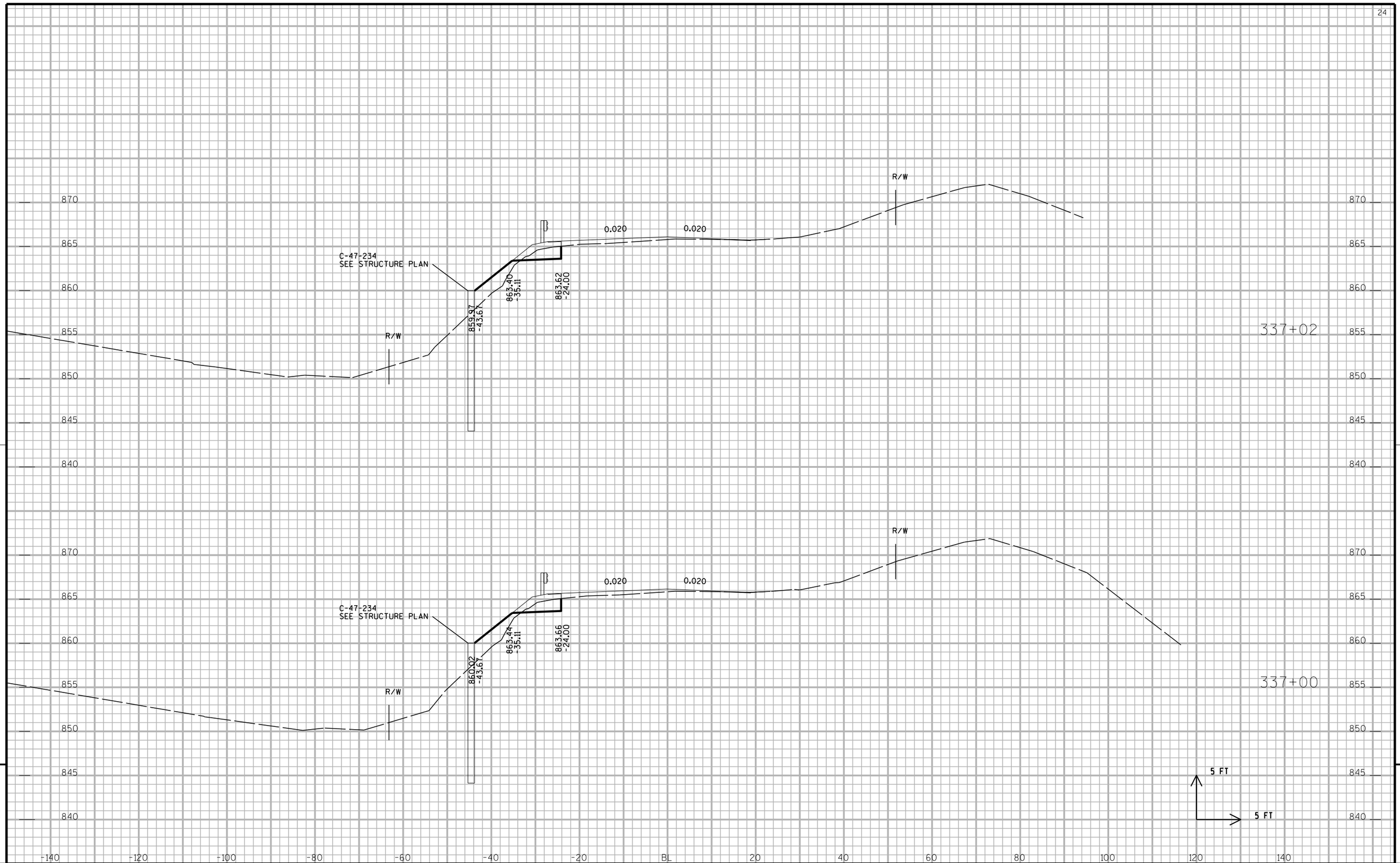

9

9

PROJECT NO: 1530-07-62	HWY: USH 10	COUNTY: PIERCE	CROSS SECTIONS: USH 10	SHEET 226	E

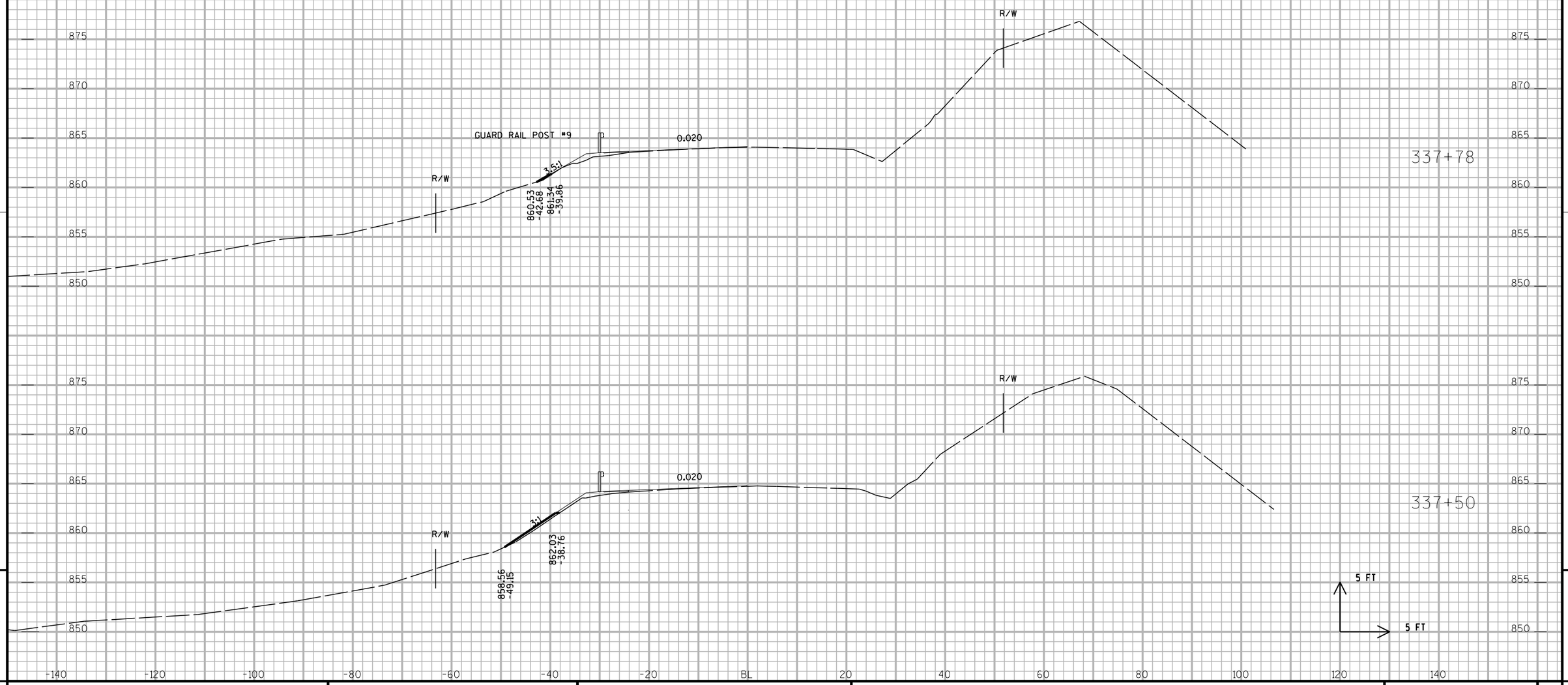

9

9

PROJECT NO: 1530-07-62	HWY: USH 10	COUNTY: PIERCE	CROSS SECTIONS: USH 10	SHEET 227	E

FILE NAME : X:\23046-80\10024\TECH\CAD\export\090001_XS-plot.DGN PLOT DATE : 4/29/2013 PLOT BY : 280hkg PLOT NAME : PLOT SCALE : 2.0000 sf / in.

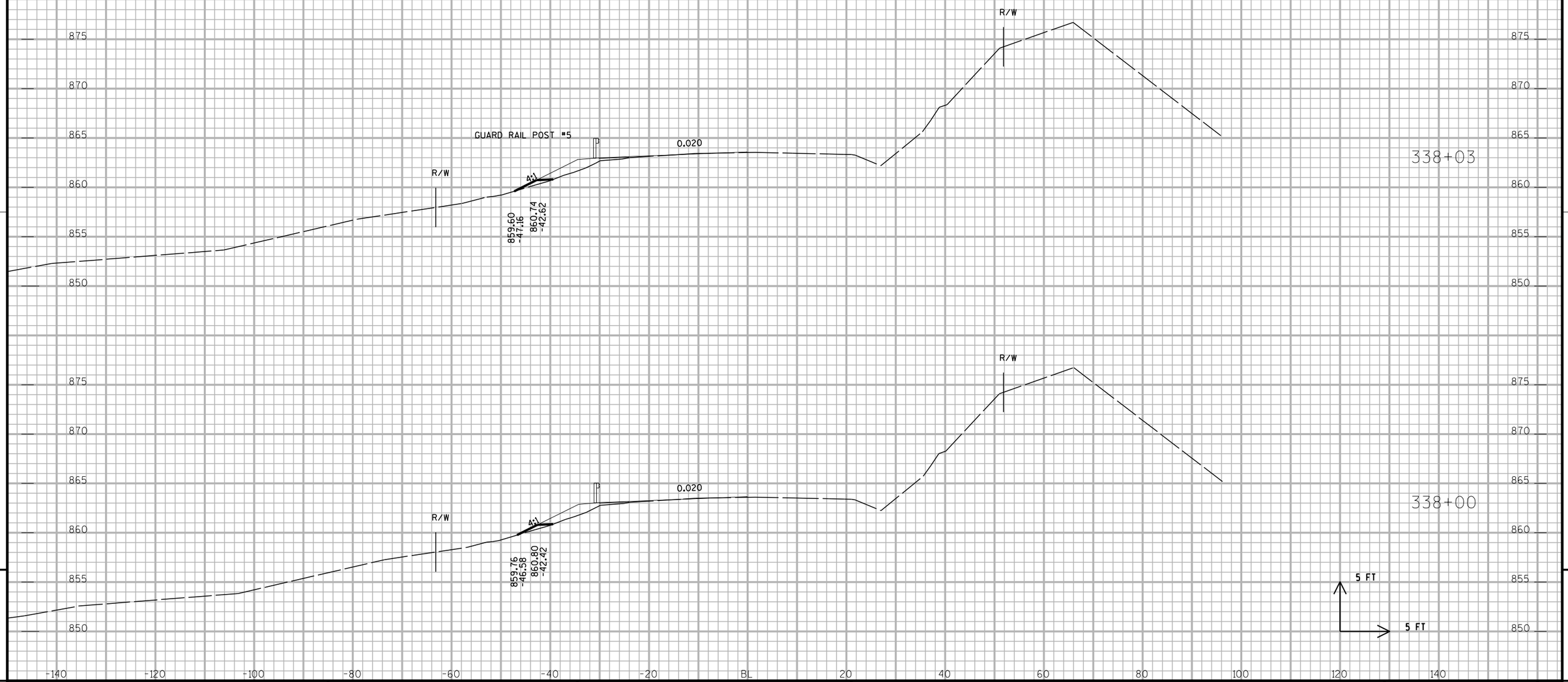

9

PROJECT NO: 1530-07-62	HWY: USH 10	COUNTY: PIERCE	CROSS SECTIONS: USH 10	SHEET 228	E

9

FILE NAME : X:\23046-80\10024\TECH\CAD\export\090001_XS-plot.DGN PLOT DATE : 4/29/2013 PLOT BY : 280hkg PLOT NAME : PLOT SCALE : 2.0000 sf / in.

WISDOT/CADDS SHEET 21

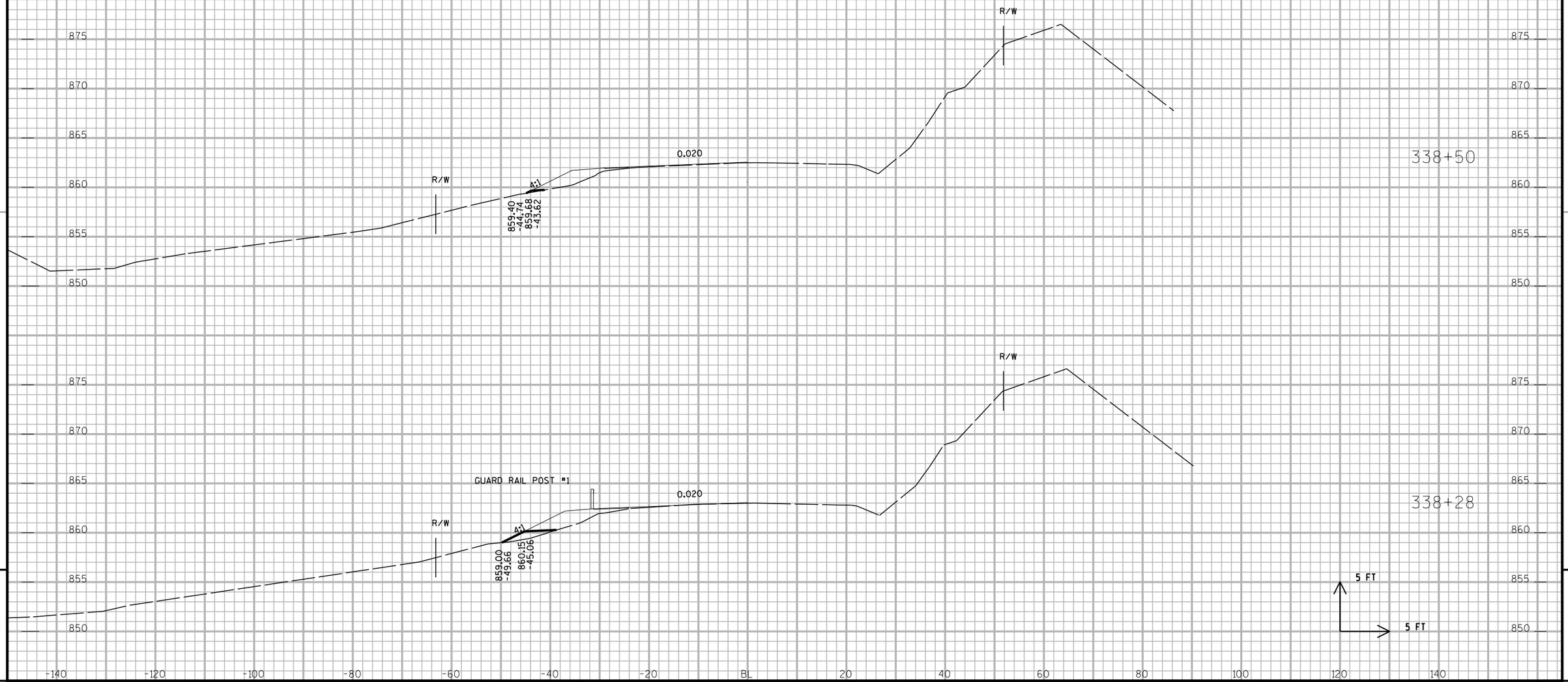

9

9

PROJECT NO: 1530-07-62	HWY: USH 10	COUNTY: PIERCE	CROSS SECTIONS: USH 10	SHEET 229	E

FILE NAME : X:\23046-80\10024\TECH\CAD\export\090001_XS-plot.DGN PLOT DATE : 4/29/2013 PLOT BY : 280hkg PLOT NAME : PLOT SCALE : 2.0000 sf / in.

WISDOT/CADDS SHEET 21

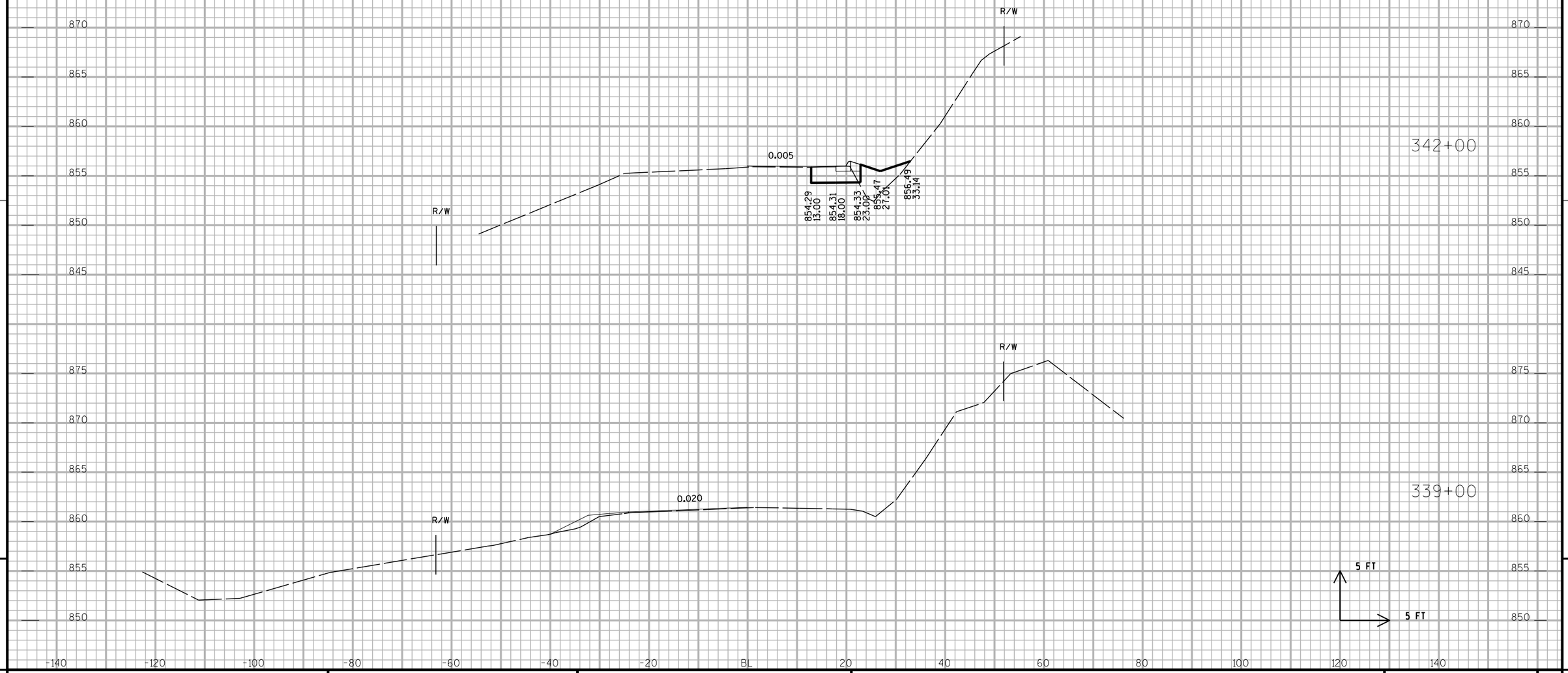

9

9

PROJECT NO: 1530-07-62	HWY: USH 10	COUNTY: PIERCE	CROSS SECTIONS: USH 10	SHEET 230	E

FILE NAME : X:\23046-80\10024\TECH\CAD\export\090001_XS-plot.DGN PLOT DATE : 4/29/2013 PLOT BY : 280hkg PLOT NAME : PLOT SCALE : 2.0000 sf / in.

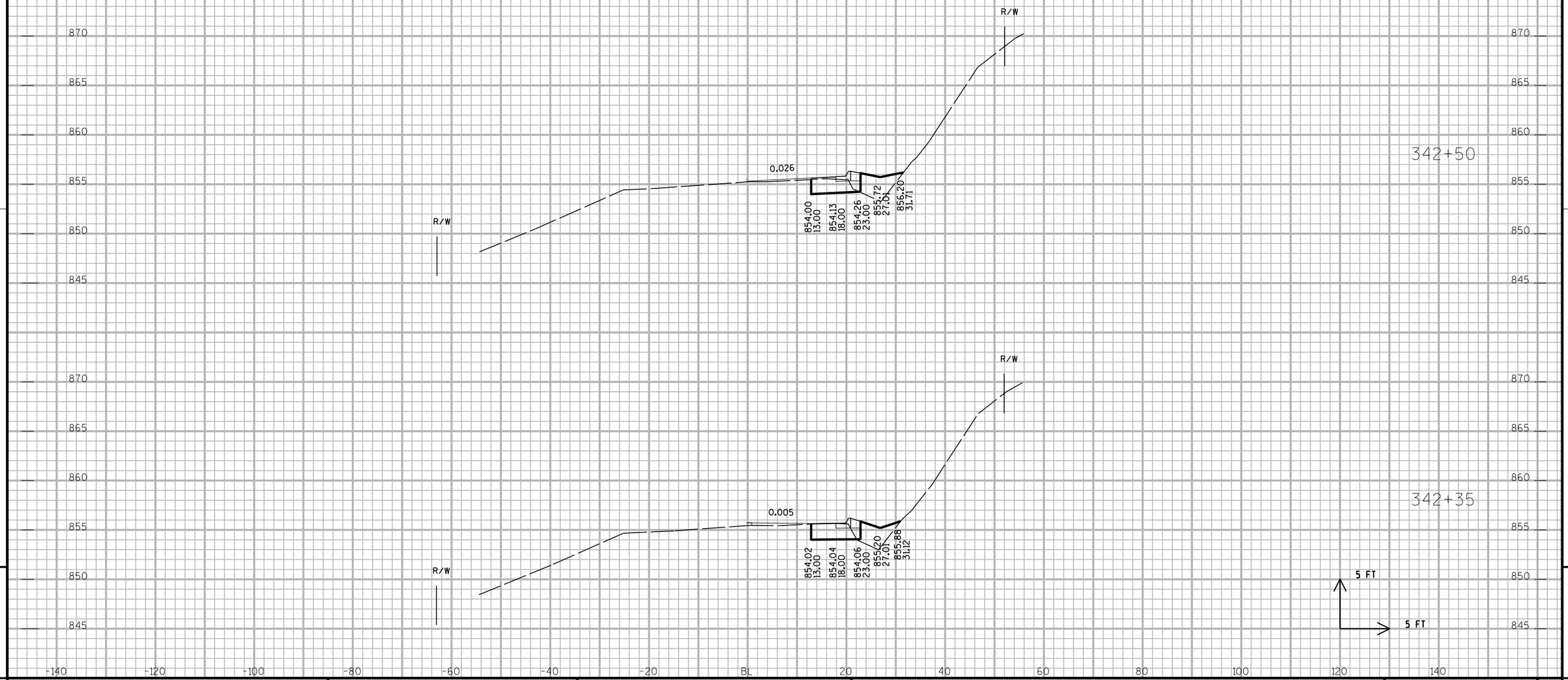

9

9

PROJECT NO: 1530-07-62	HWY: USH 10	COUNTY: PIERCE	CROSS SECTIONS: USH 10	SHEET 231	E

FILE NAME : X:\23046-80\10024\TECH\CAD\export\090001_XS-plot.DGN PLOT DATE : 4/29/2013 PLOT BY : 280hkg PLOT NAME : PLOT SCALE : 2.0000 sf / in.

WISDOT/CADDS SHEET 21

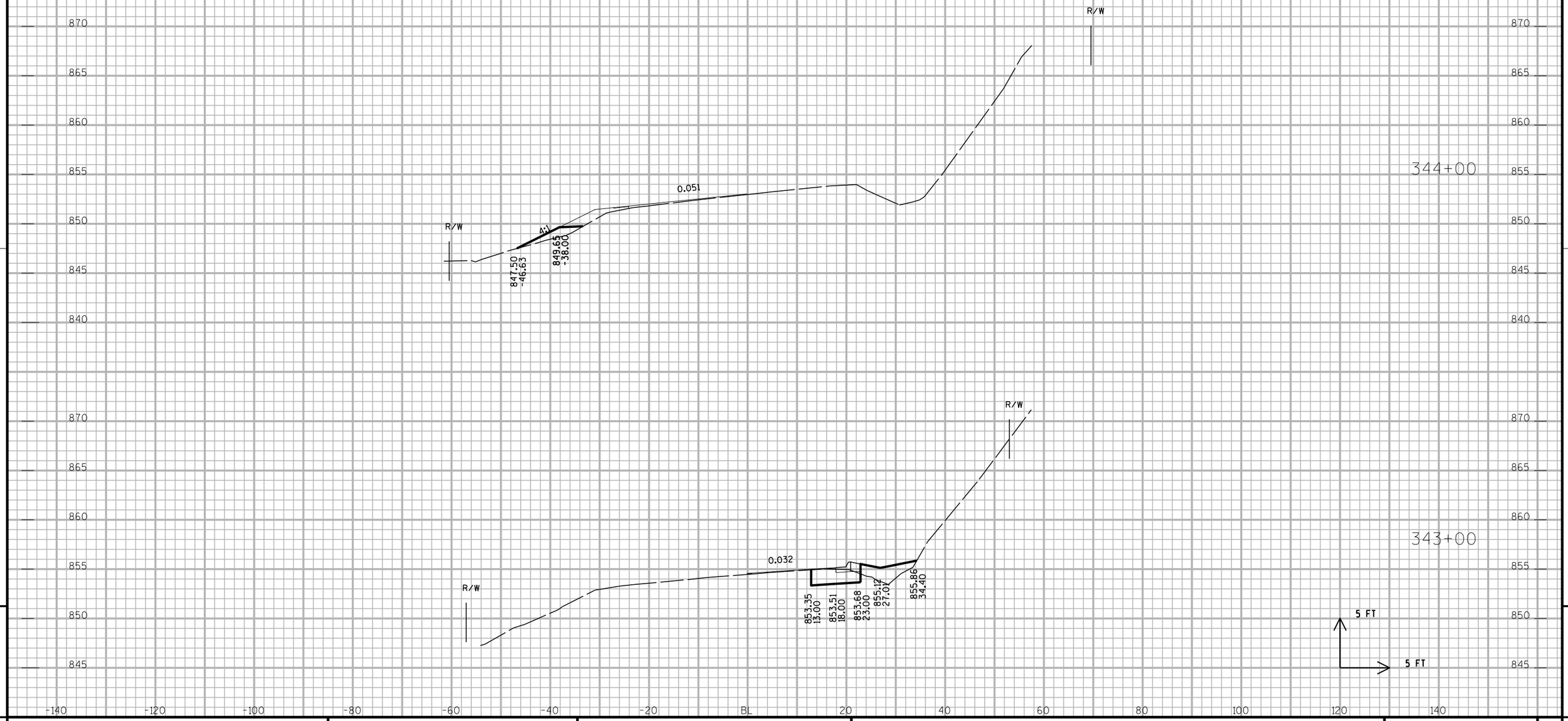

9

9

PROJECT NO: 1530-07-62	HWY: USH 10	COUNTY: PIERCE	CROSS SECTIONS: USH 10	SHEET 232	E

FILE NAME : X:\23046-80\10024\TECH\CAD\export\090001_XS-plot.DGN PLOT DATE : 4/29/2013 PLOT BY : 280hkg PLOT NAME : PLOT SCALE : 2.0000 sf / in.

WISDOT/CADDS SHEET 21

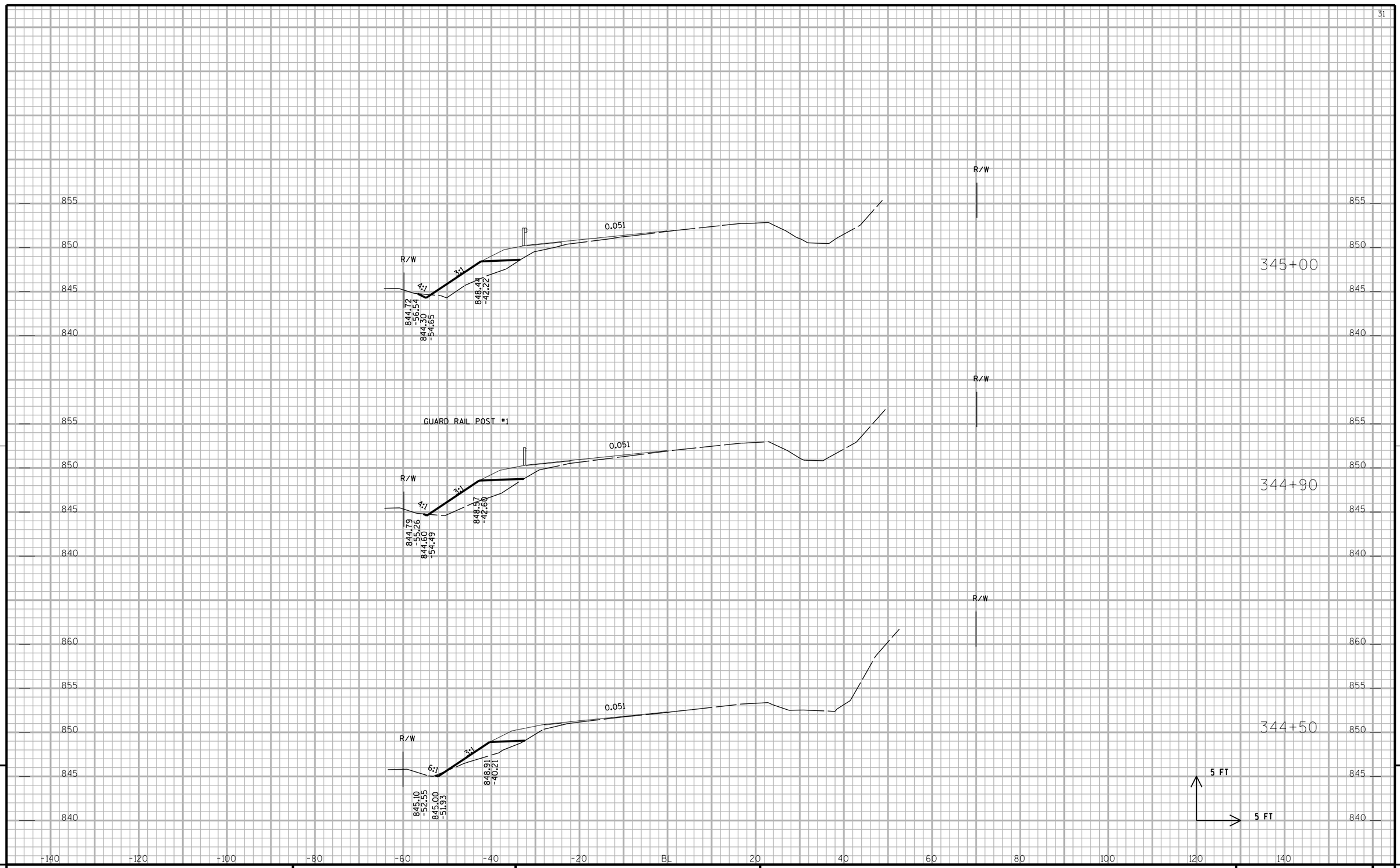

9

9

PROJECT NO: 1530-07-62	HWY: USH 10	COUNTY: PIERCE	CROSS SECTIONS: USH 10	SHEET 233	E

FILE NAME : X:\23046-80\10024\TECH\CAD\export\090001_XS-plot.DGN PLOT DATE : 4/29/2013 PLOT BY : 280hkg PLOT NAME : PLOT SCALE : 2.0000 sf / in.

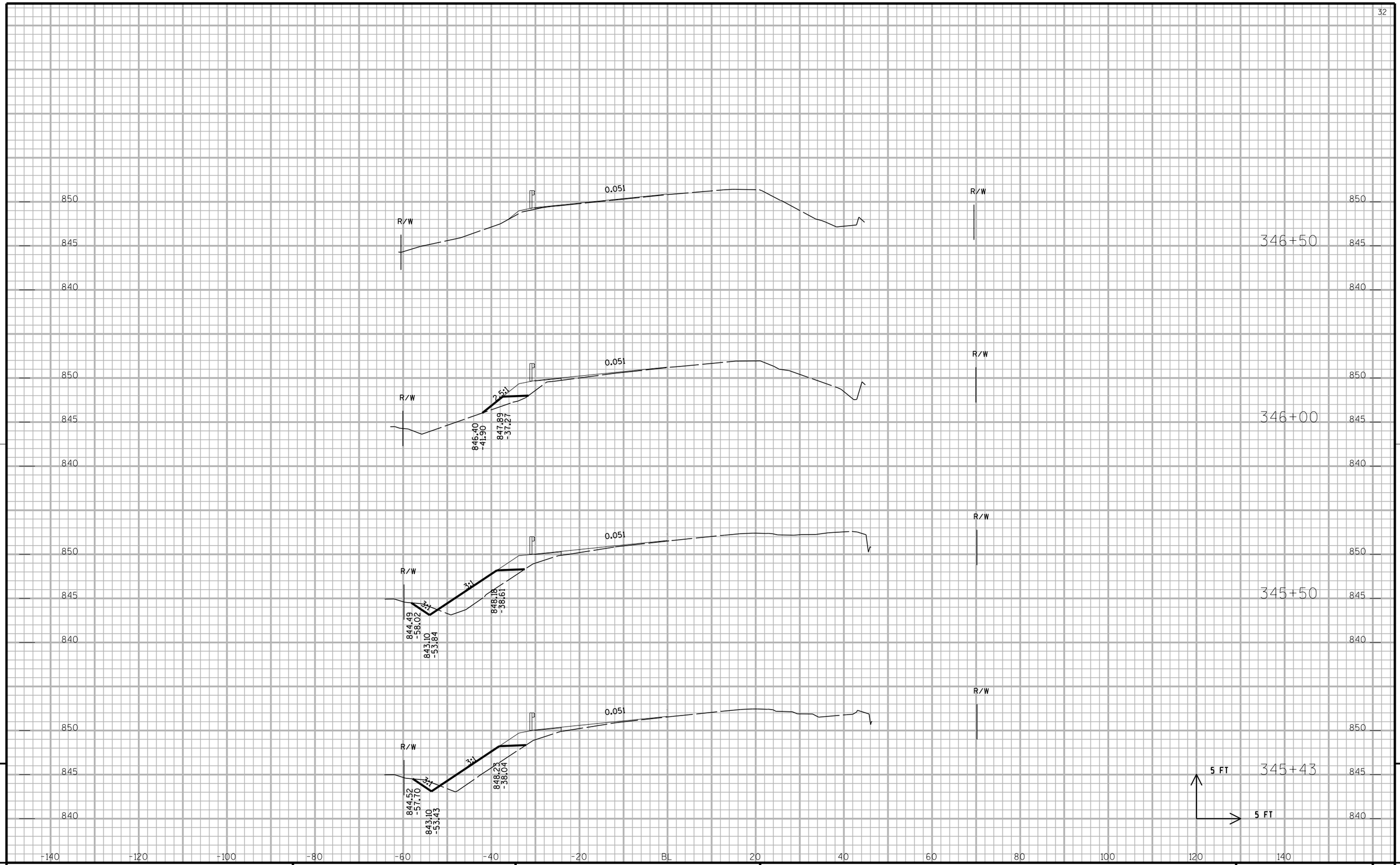

9

9

PROJECT NO: 1530-07-62	HWY: USH 10	COUNTY: PIERCE	CROSS SECTIONS: USH 10	SHEET 234	E

FILE NAME : X:\23046-80\10024\TECH\CAD\export\090001_XS-plot.DGN PLOT DATE : 4/29/2013 PLOT BY : 280hkg PLOT NAME : PLOT SCALE : 2.0000 sf / in.

WISDOT/CADDS SHEET 21

GUARD RAIL POST #1

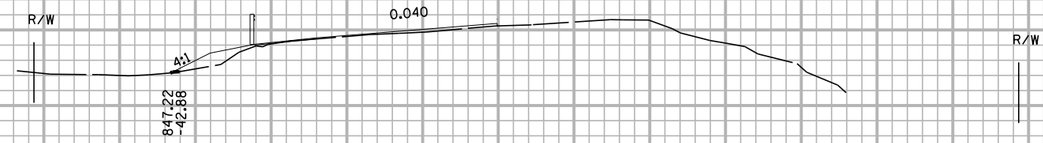

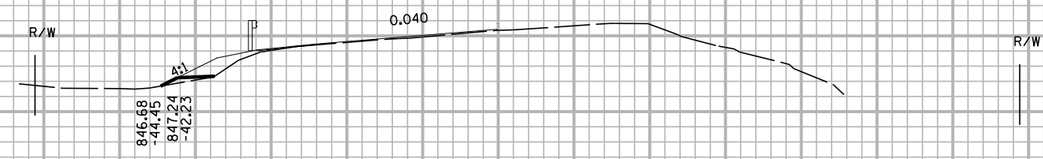

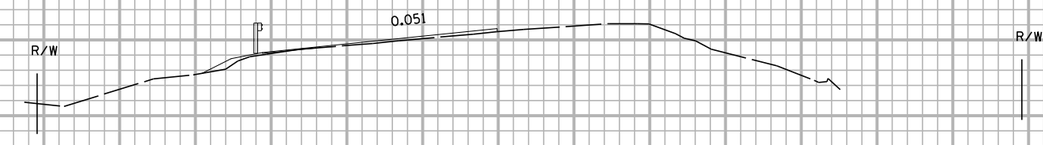

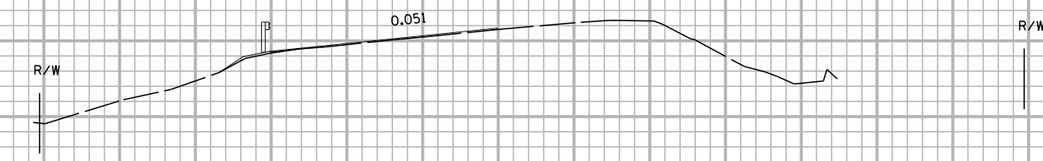

9

9

PROJECT NO: 1530-07-62	HWY: USH 10	COUNTY: PIERCE	CROSS SECTIONS: USH 10	SHEET 235	E

GUARD RAIL POST #5

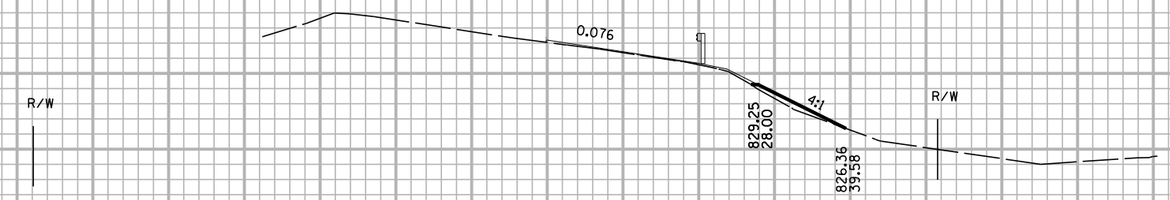

353+73

353+50

GUARD RAIL POST #1

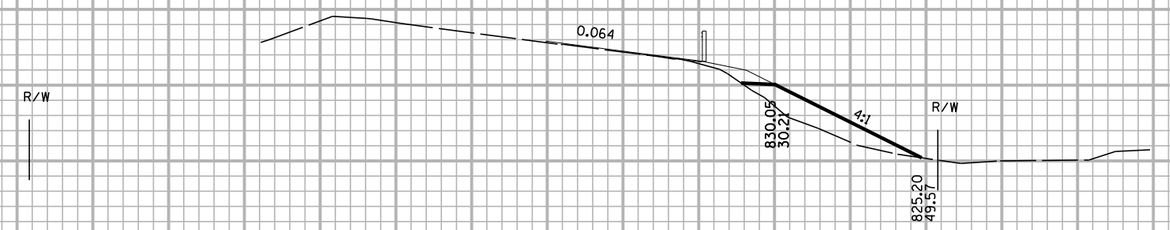

353+48

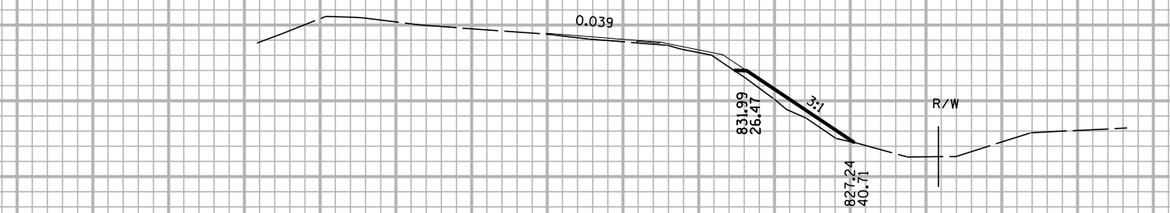

353+00

5 FT
5 FT

-140 -120 -100 -80 -60 -40 -20 BL 20 40 60 80 100 120 140

9 9

PROJECT NO: 1530-07-62	HWY: USH 10	COUNTY: PIERCE	CROSS SECTIONS: USH 10	SHEET 236	E

FILE NAME : X:\23046-80\10024\TECH\CAD\export\090001_XS-plot.DGN PLOT DATE : 4/29/2013 PLOT BY : 280hkg PLOT NAME : PLOT SCALE : 2.0000 sf / in.

WISDOT/CADDS SHEET 21

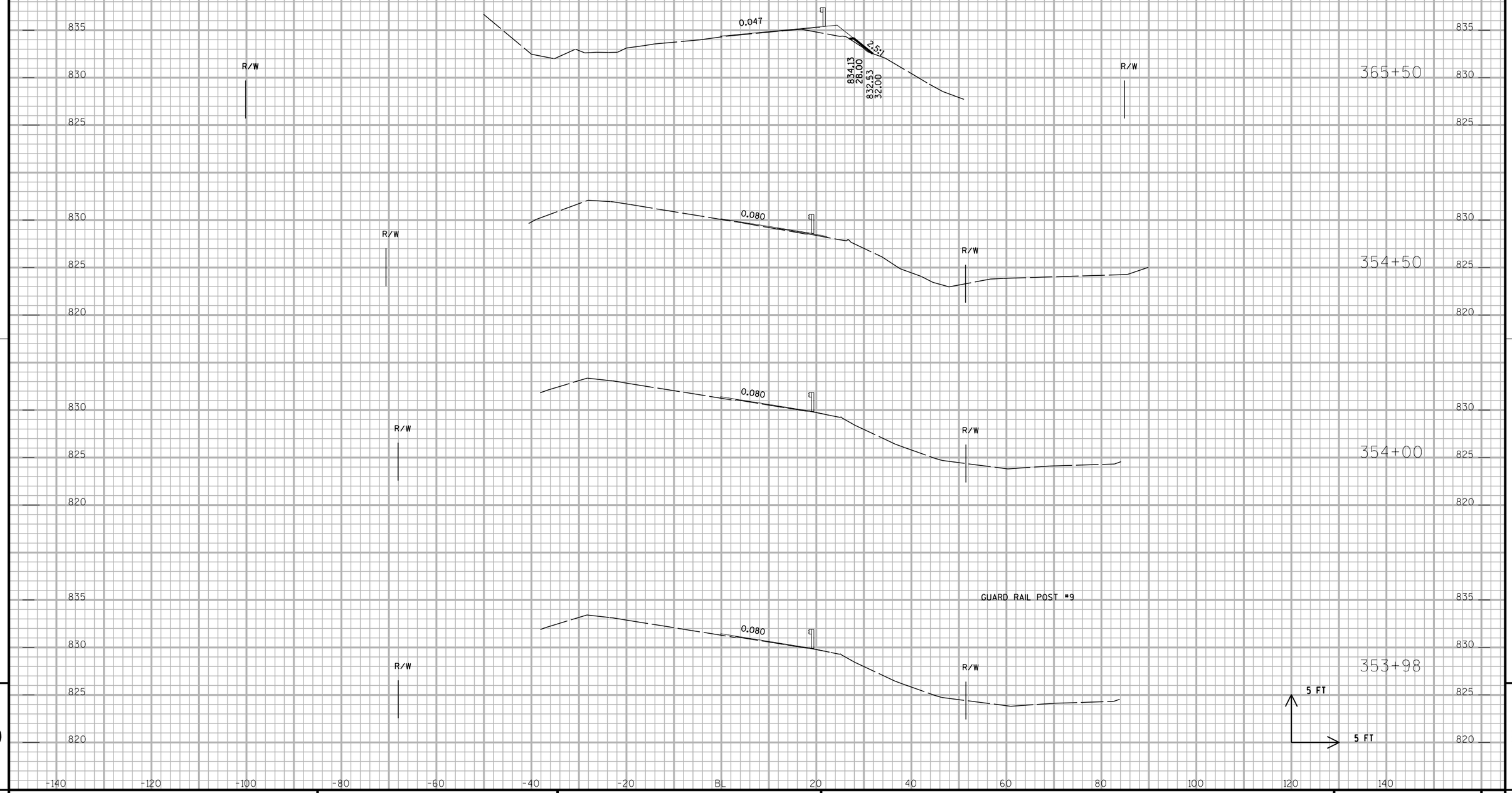

PROJECT NO: 1530-07-62	HWY: USH 10	COUNTY: PIERCE	CROSS SECTIONS: USH 10	SHEET 237	E

FILE NAME : X:\23046-80\10024\TECH\CAD\export\090001_XS-plot.DGN PLOT DATE : 4/29/2013 PLOT BY : 280hkg PLOT NAME : PLOT SCALE : 2.0000 sf / in.

WISDOT/CADDS SHEET 21

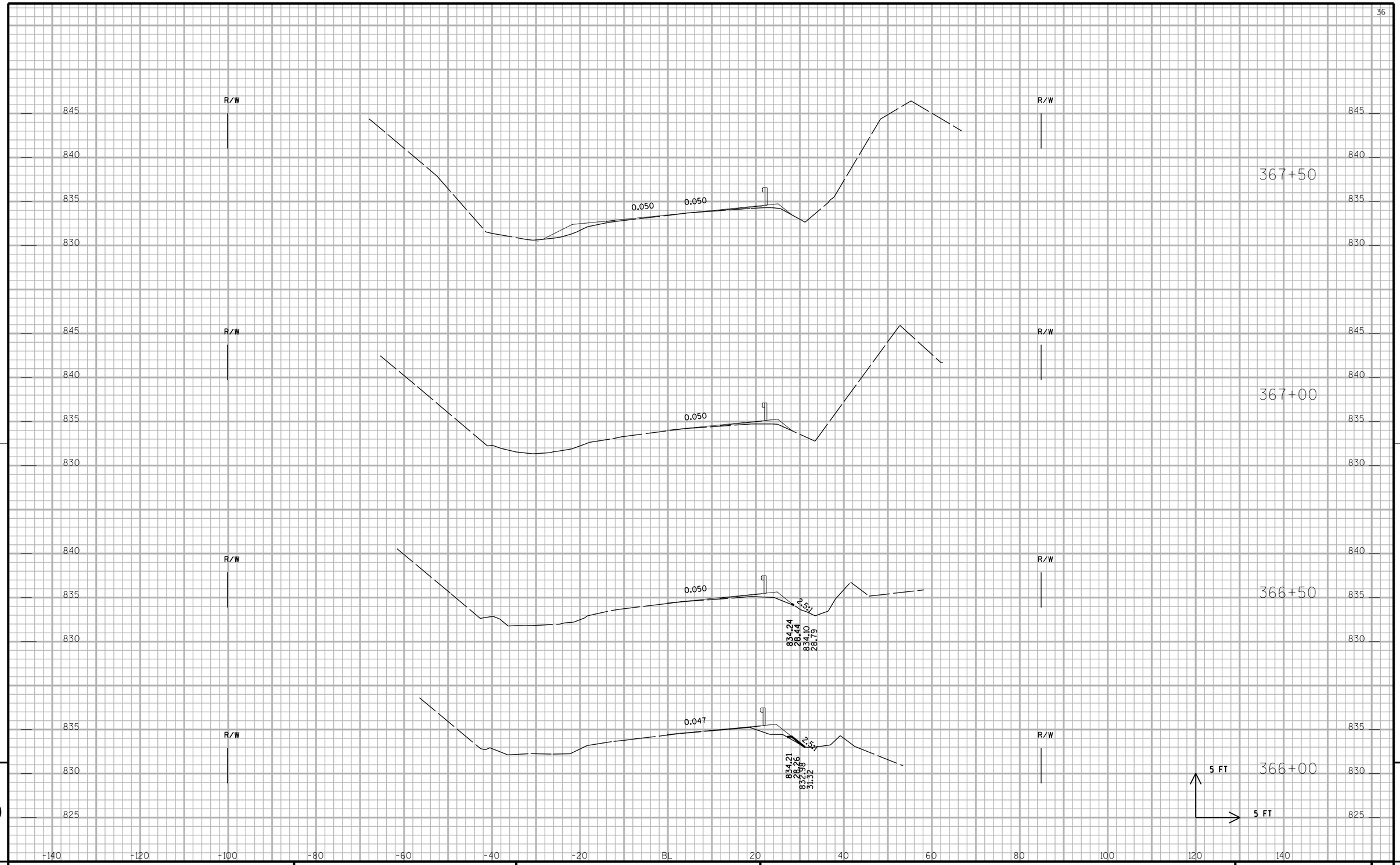

9

9

PROJECT NO: 1530-07-62	HWY: USH 10	COUNTY: PIERCE	CROSS SECTIONS: USH 10	SHEET 238	E

FILE NAME : X:\23046-80\10024\TECH\CAD\export\090001_XS-plot.DGN PLOT DATE : 4/29/2013 PLOT BY : 280hkg PLOT NAME : PLOT SCALE : 2.0000 sf / in.

WISDOT/CADDS SHEET 21

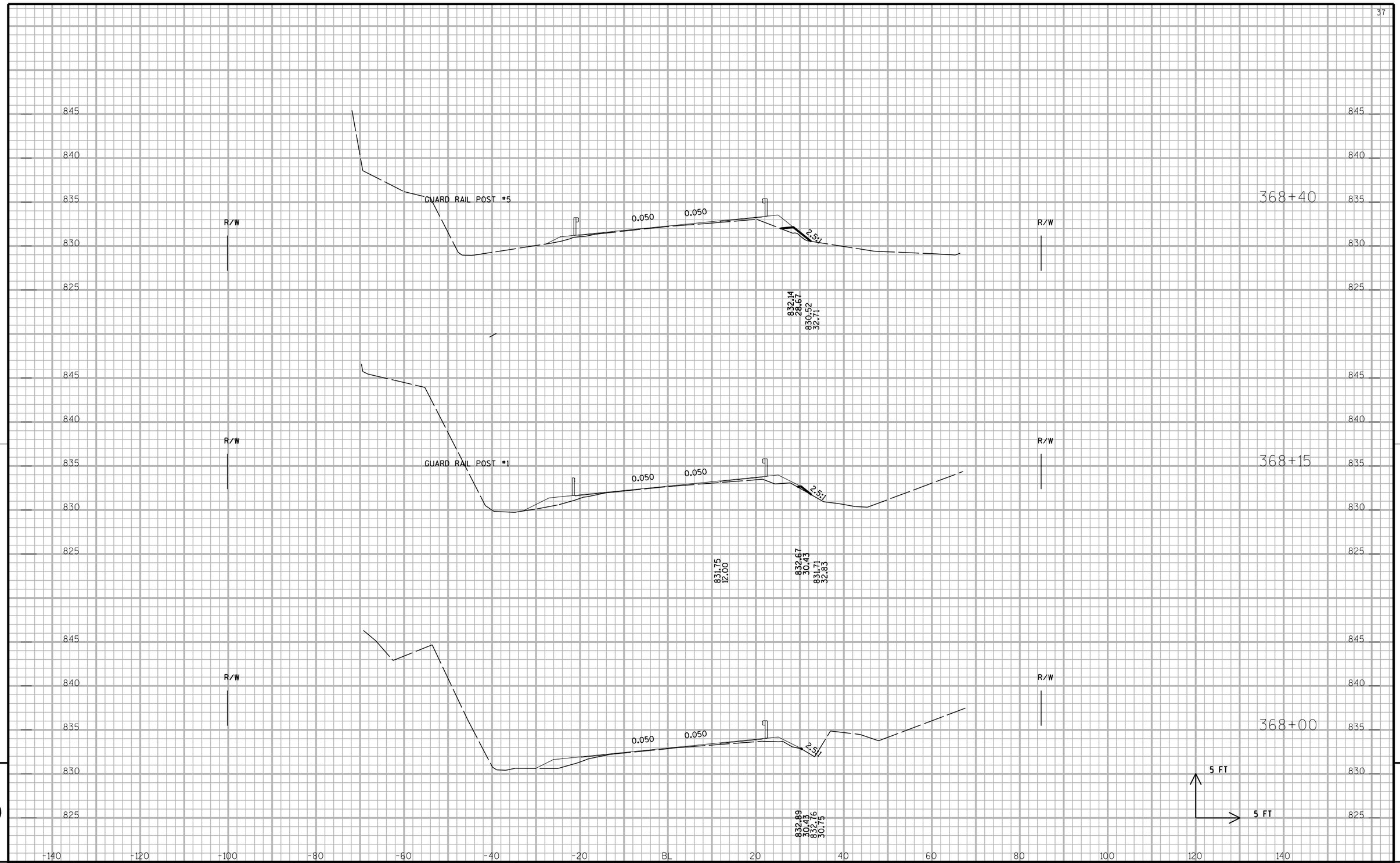

PROJECT NO: 1530-07-62	HWY: USH 10	COUNTY: PIERCE	CROSS SECTIONS: USH 10	SHEET 239	E

FILE NAME : X:\23046-80\10024\TECH\CAD\export\090001_XS-plot.DGN PLOT DATE : 4/29/2013 PLOT BY : 280hkg PLOT NAME : PLOT SCALE : 2.0000 sf / in.

WISDOT/CADDS SHEET 21

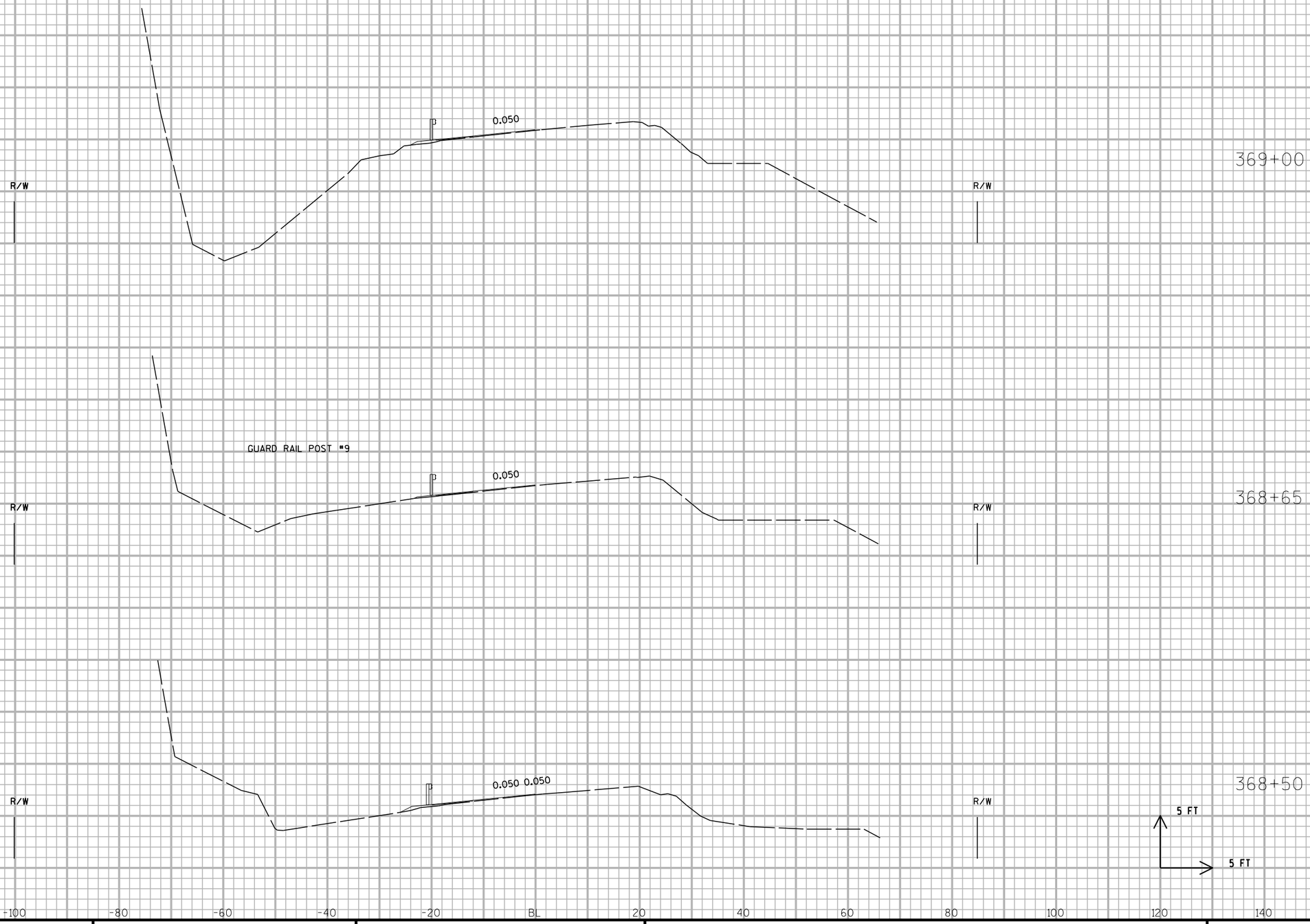

9

PROJECT NO: 1530-07-62	HWY: USH 10	COUNTY: PIERCE	CROSS SECTIONS: USH 10	SHEET 240	E

9

FILE NAME : X:\23046-80\10024\TECH\CAD\export\090001_XS-plot.DGN PLOT DATE : 4/29/2013 PLOT BY : 280hkg PLOT NAME : PLOT SCALE : 2.0000 sf / in.

WISDOT/CADDS SHEET 21

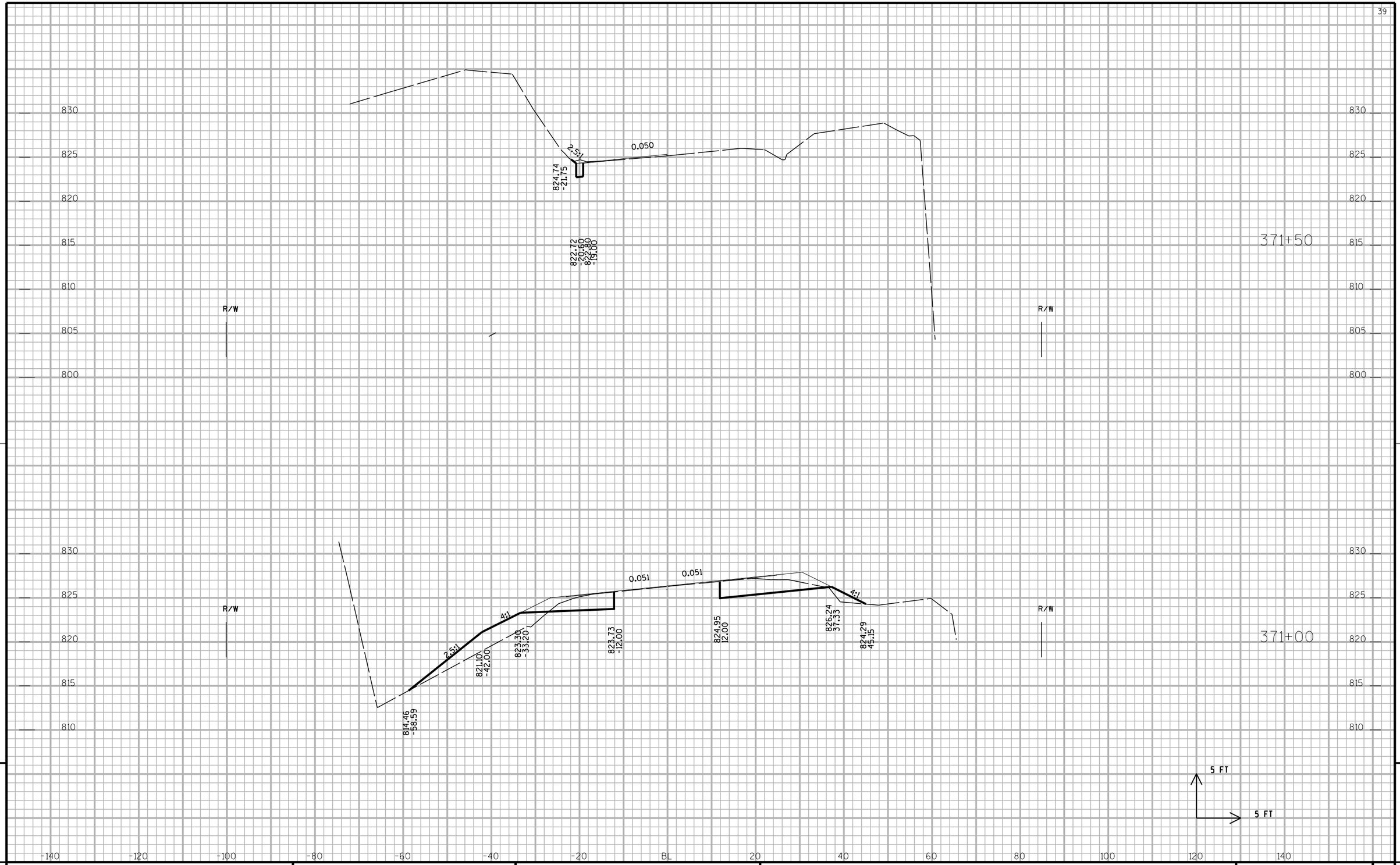

9 9

PROJECT NO: 1530-07-62	HWY: USH 10	COUNTY: PIERCE	CROSS SECTIONS: USH 10	SHEET 241	E

9

9

PROJECT NO: 1530-07-62	HWY: USH 10	COUNTY: PIERCE	CROSS SECTIONS: USH 10	SHEET 242	E

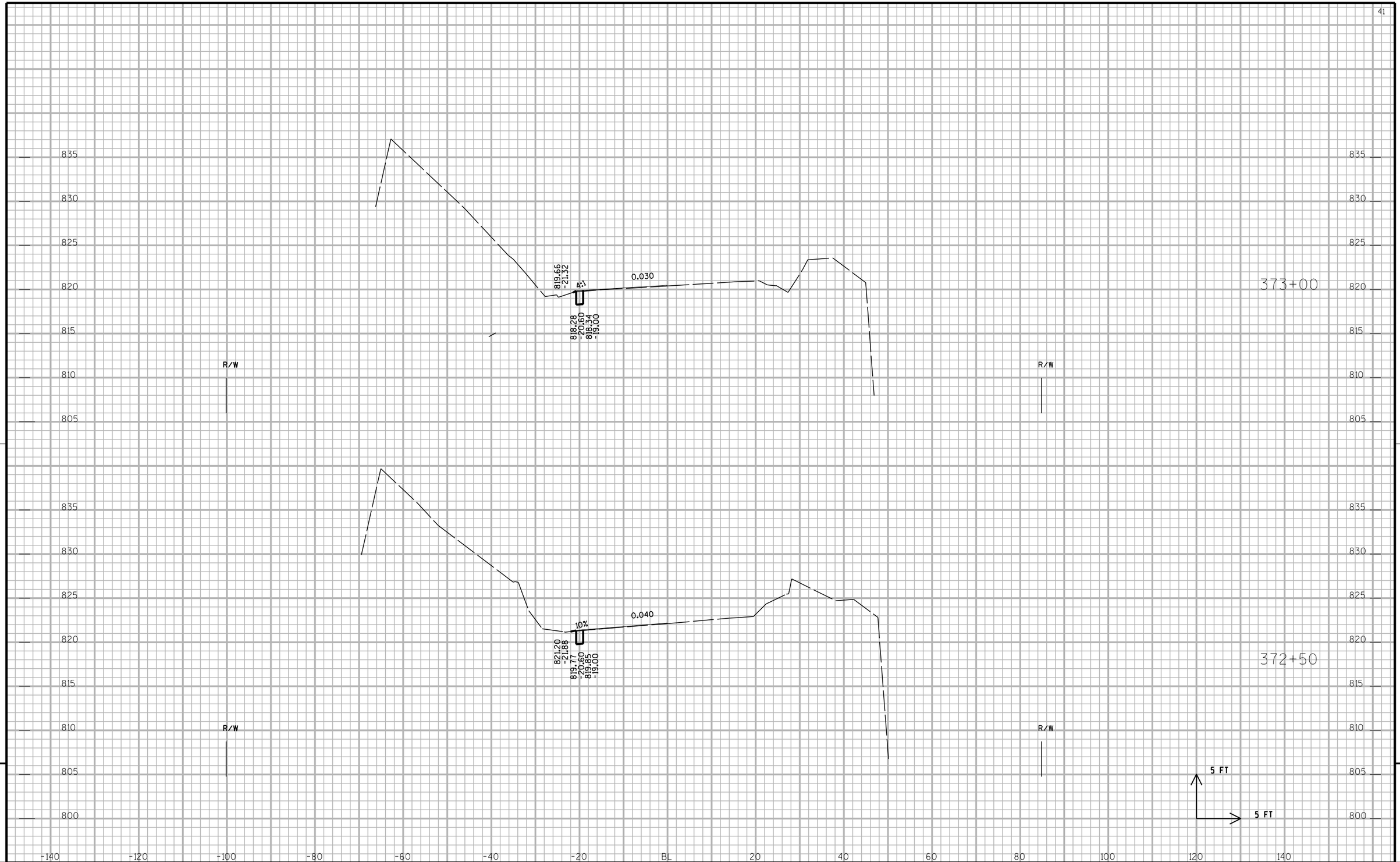

9

9

PROJECT NO: 1530-07-62	HWY: USH 10	COUNTY: PIERCE	CROSS SECTIONS: USH 10	SHEET 243	E

FILE NAME : X:\23046-80\10024\TECH\CAD\export\090001_XS-plot.DGN PLOT DATE : 4/29/2013 PLOT BY : 280hkg PLOT NAME : PLOT SCALE : 2.0000 sf / in.

WISDOT/CADDS SHEET 21

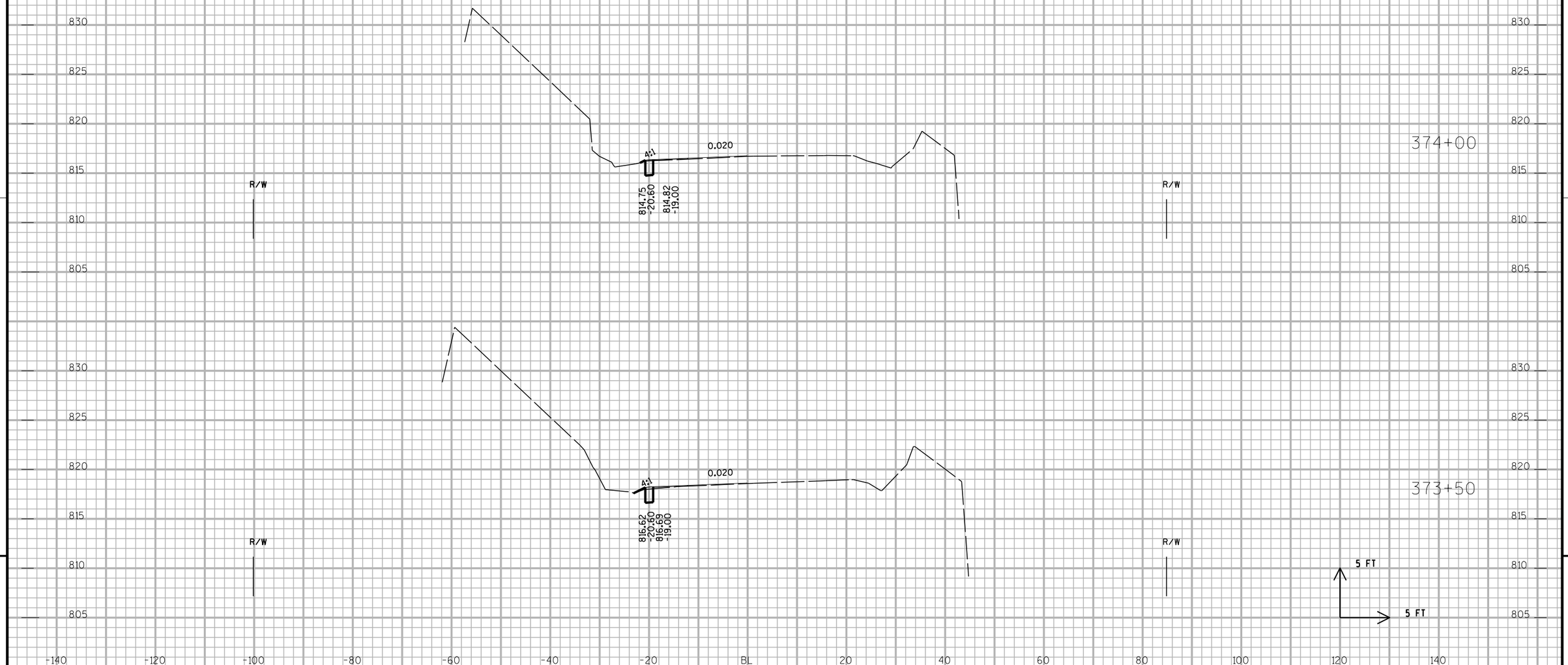

9

9

PROJECT NO: 1530-07-62	HWY: USH 10	COUNTY: PIERCE	CROSS SECTIONS: USH 10	SHEET 244	E

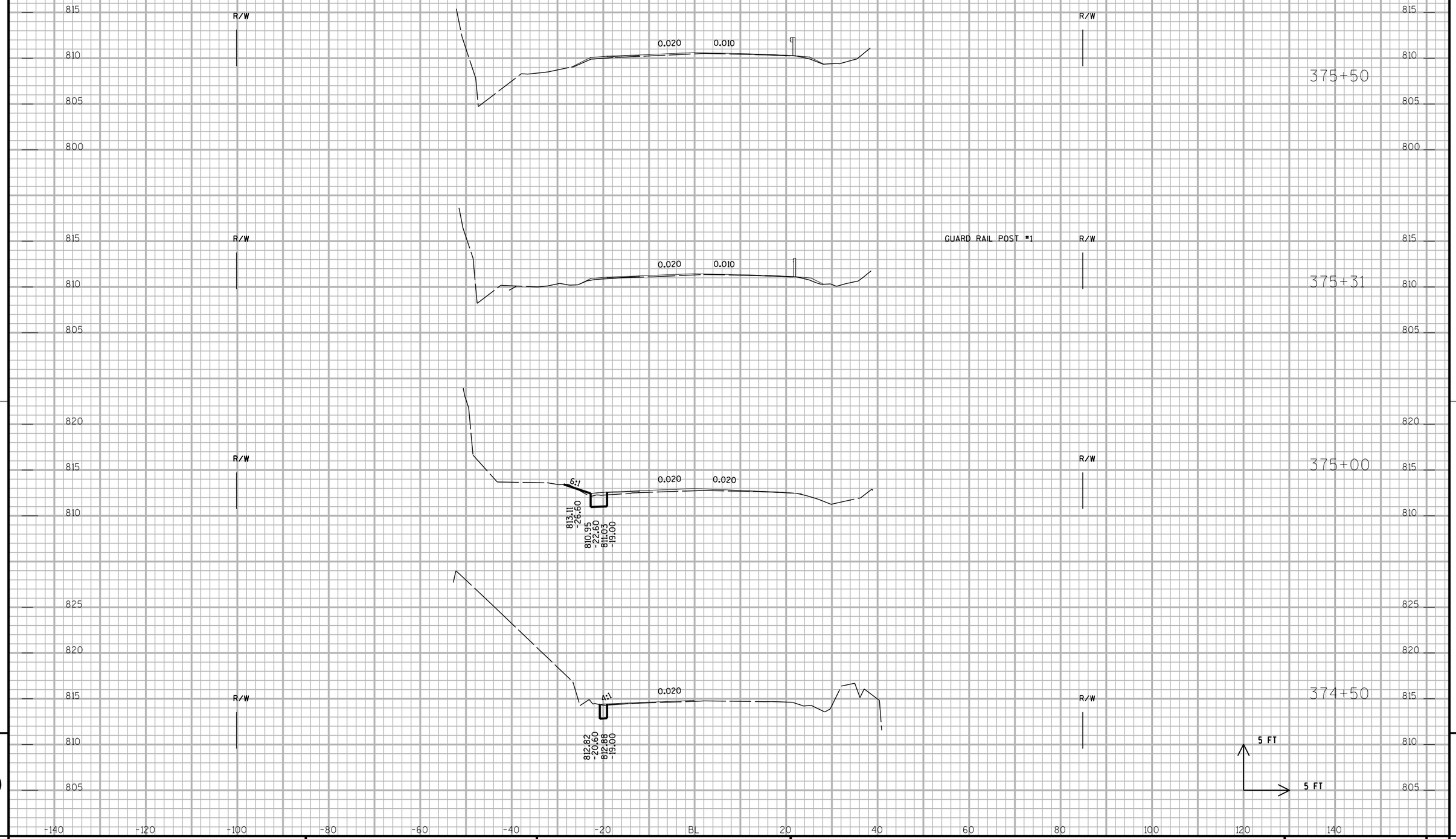

9

9

PROJECT NO: 1530-07-62	HWY: USH 10	COUNTY: PIERCE	CROSS SECTIONS: USH 10	SHEET 245	E

FILE NAME : X:\23046-80\10024\TECH\CAD\export\090001_XS-plot.DGN PLOT DATE : 4/29/2013 PLOT BY : 280hkg PLOT NAME : PLOT SCALE : 2.0000 sf / in.

WISDOT/CADDS SHEET 21

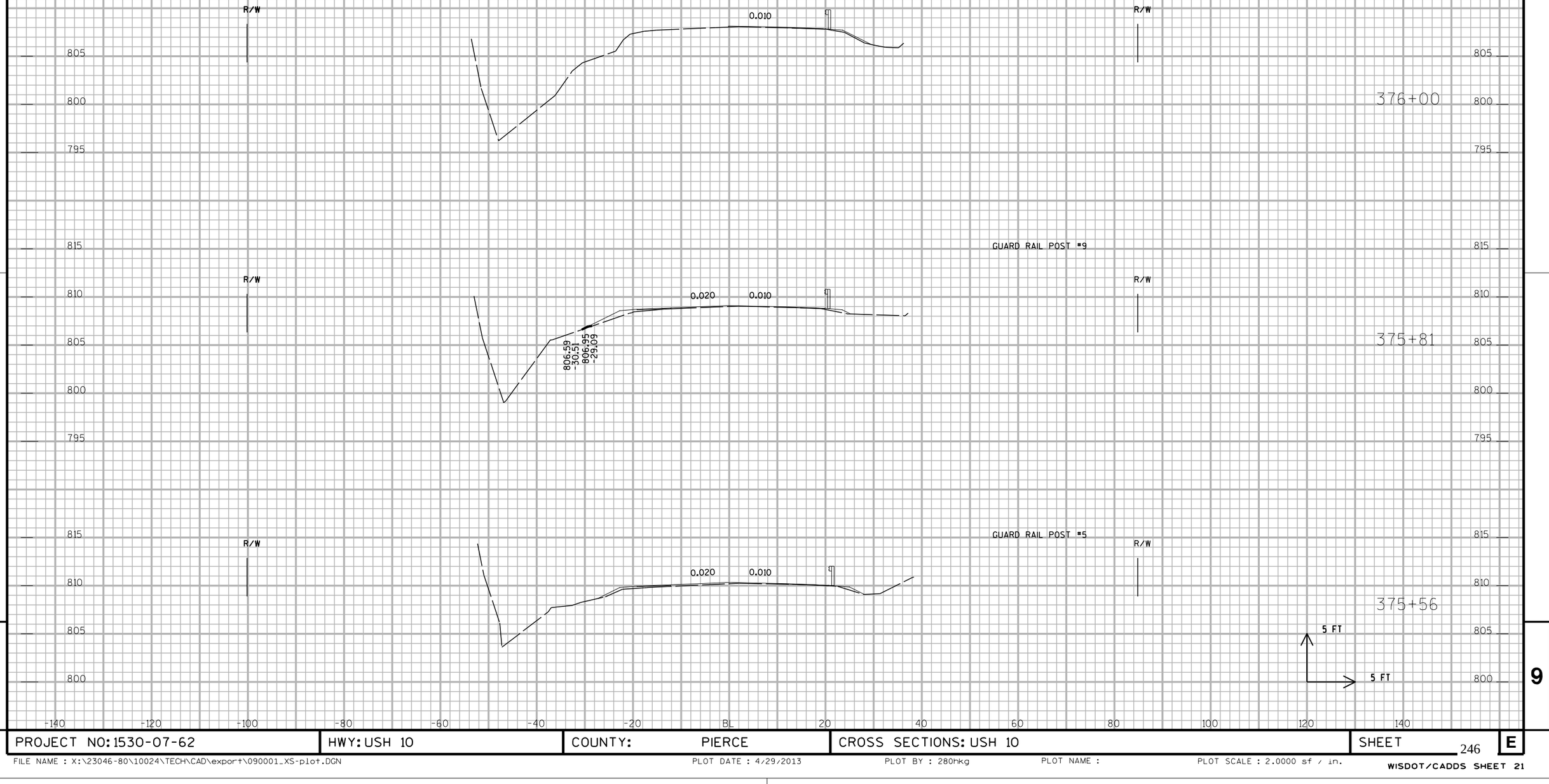

9

9

PROJECT NO: 1530-07-62	HWY: USH 10	COUNTY: PIERCE	CROSS SECTIONS: USH 10	SHEET 246	E

FILE NAME : X:\23046-80\10024\TECH\CAD\export\090001_XS-plot.DGN PLOT DATE : 4/29/2013 PLOT BY : 280hkg PLOT NAME : PLOT SCALE : 2.0000 sf / in.

WISDOT/CADDS SHEET 21

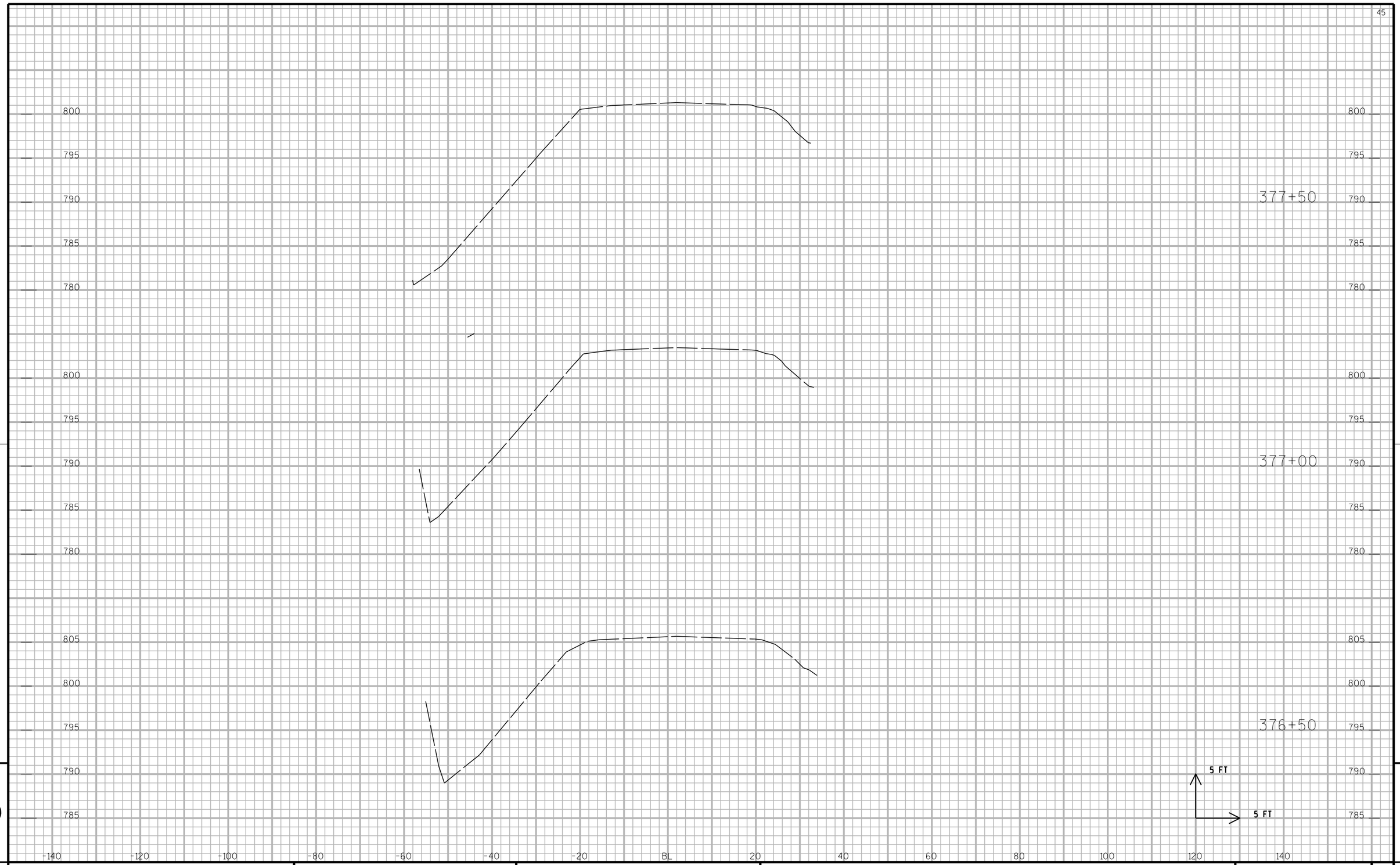

9

9

PROJECT NO: 1530-07-62	HWY: USH 10	COUNTY: PIERCE	CROSS SECTIONS: USH 10	SHEET 247	E

FILE NAME : X:\23046-80\10024\TECH\CAD\export\090001_XS-plot.DGN PLOT DATE : 4/29/2013 PLOT BY : 280hkg PLOT NAME : PLOT SCALE : 2.0000 sf / in.

WISDOT/CADDS SHEET 21

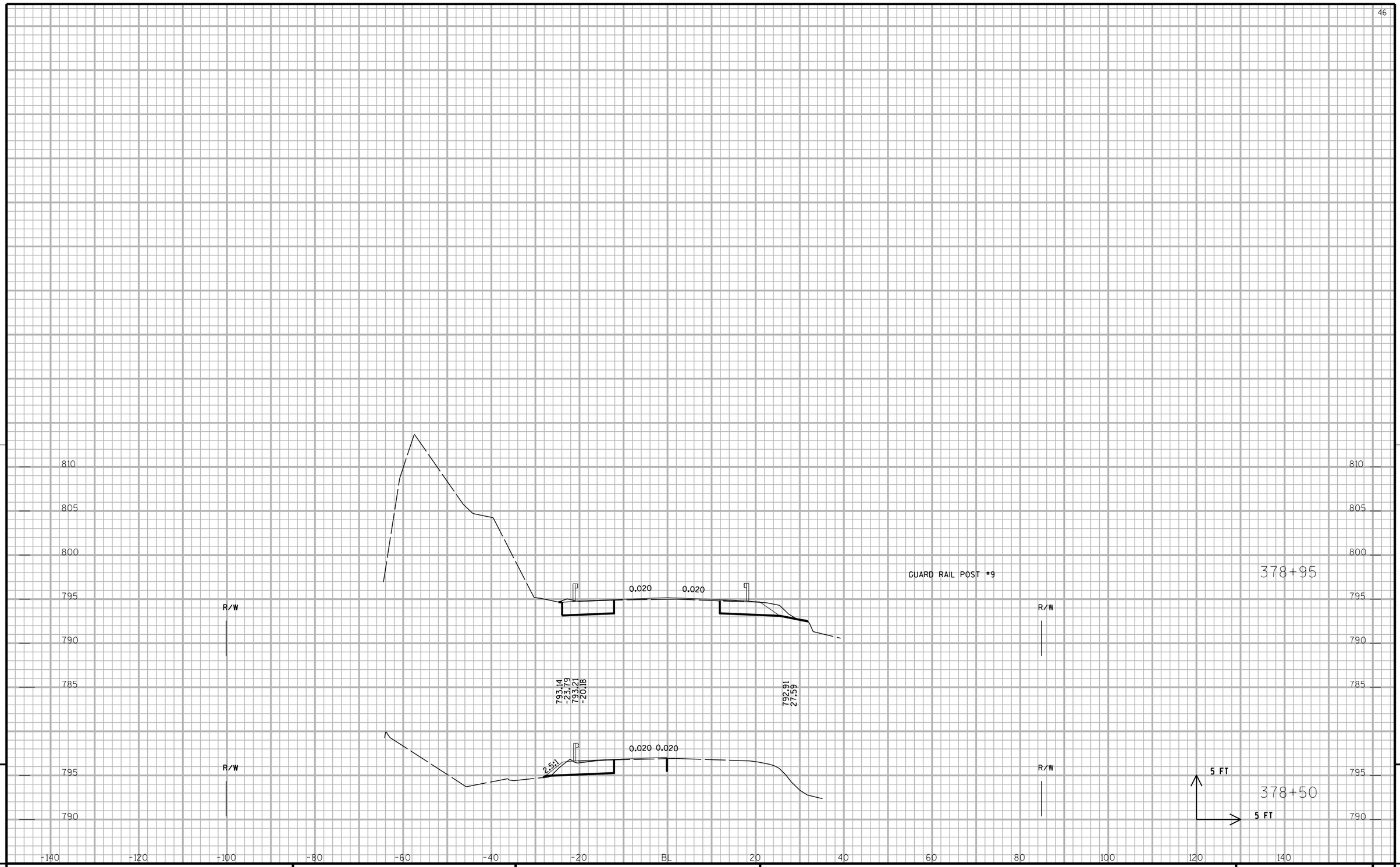

9

9

PROJECT NO: 1530-07-62	HWY: USH 10	COUNTY: PIERCE	CROSS SECTIONS: USH 10	SHEET 248	E

FILE NAME : X:\23046-80\10024\TECH\CAD\export\090001_XS-plot.DGN PLOT DATE : 4/29/2013 PLOT BY : 280hkg PLOT NAME : PLOT SCALE : 2.0000 sf / in.

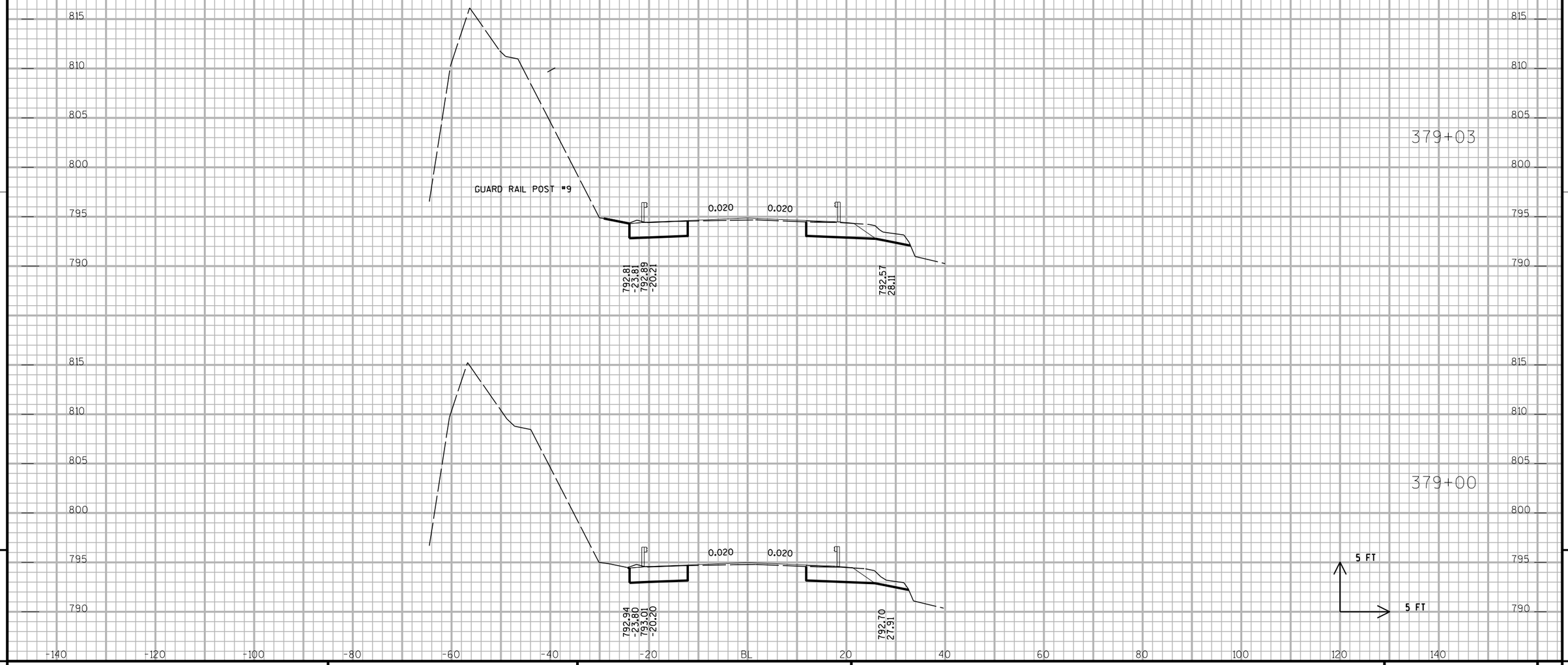

9

9

PROJECT NO: 1530-07-62	HWY: USH 10	COUNTY: PIERCE	CROSS SECTIONS: USH 10	SHEET 249	E

FILE NAME : X:\23046-80\10024\TECH\CAD\export\090001_XS-plot.DGN PLOT DATE : 4/29/2013 PLOT BY : 280hkg PLOT NAME : PLOT SCALE : 2.0000 sf / in.

WISDOT/CADDS SHEET 21

379+28

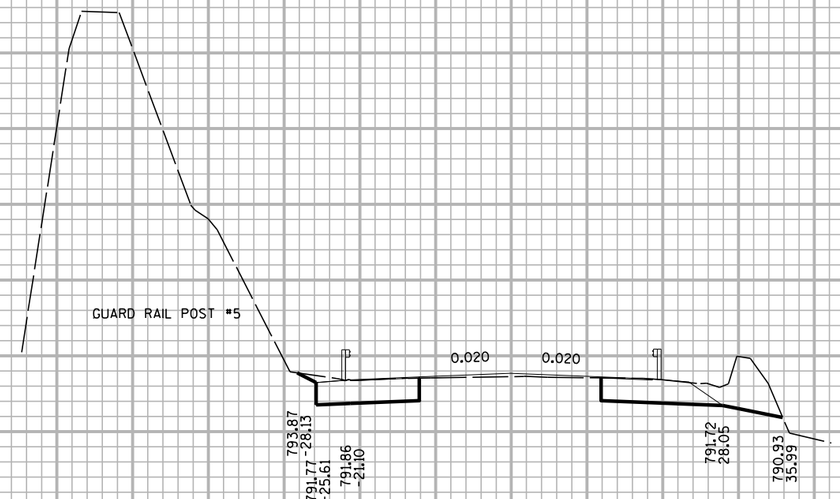

379+20

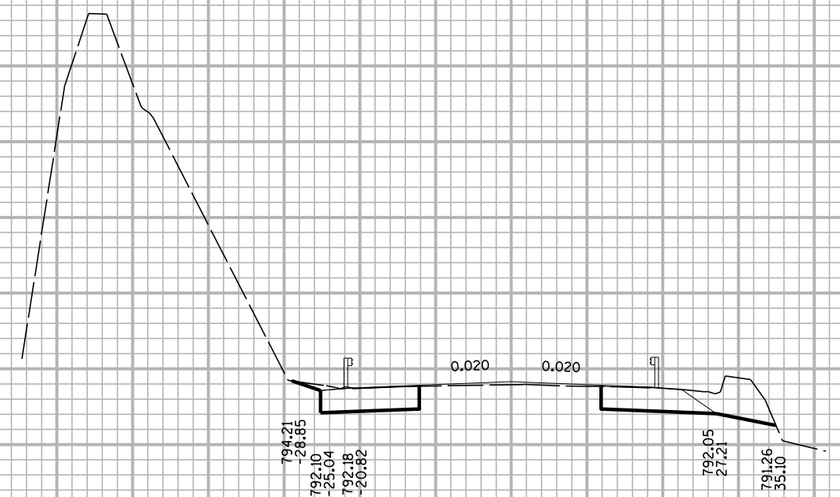

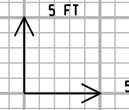

815 810 805 800 795 790 785

-140 -120 -100 -80 -60 -40 -20 BL 20 40 60 80 100 120 140

9

9

PROJECT NO: 1530-07-62	HWY: USH 10	COUNTY: PIERCE	CROSS SECTIONS: USH 10	SHEET 250	E

FILE NAME : X:\23046-80\10024\TECH\CAD\export\090001_XS-plot.DGN PLOT DATE : 4/29/2013 PLOT BY : 280hkg PLOT NAME : PLOT SCALE : 2.0000 sf / in.

WISDOT/CADDS SHEET 21

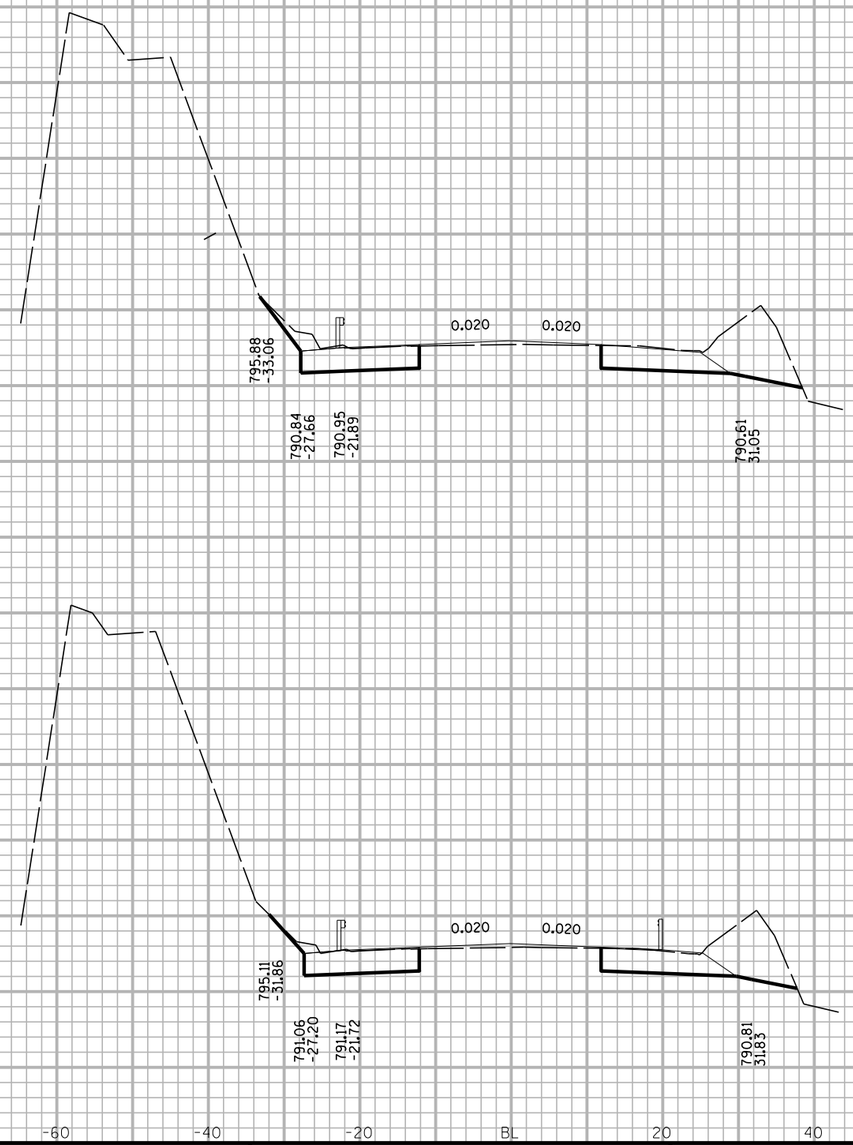

9

9

PROJECT NO: 1530-07-62	HWY: USH 10	COUNTY: PIERCE	CROSS SECTIONS: USH 10	SHEET 251	E

FILE NAME : X:\23046-80\10024\TECH\CAD\export\090001_XS-plot.DGN PLOT DATE : 4/29/2013 PLOT BY : 280hkg PLOT NAME : PLOT SCALE : 2.0000 sf / in.

WISDOT/CADDS SHEET 21

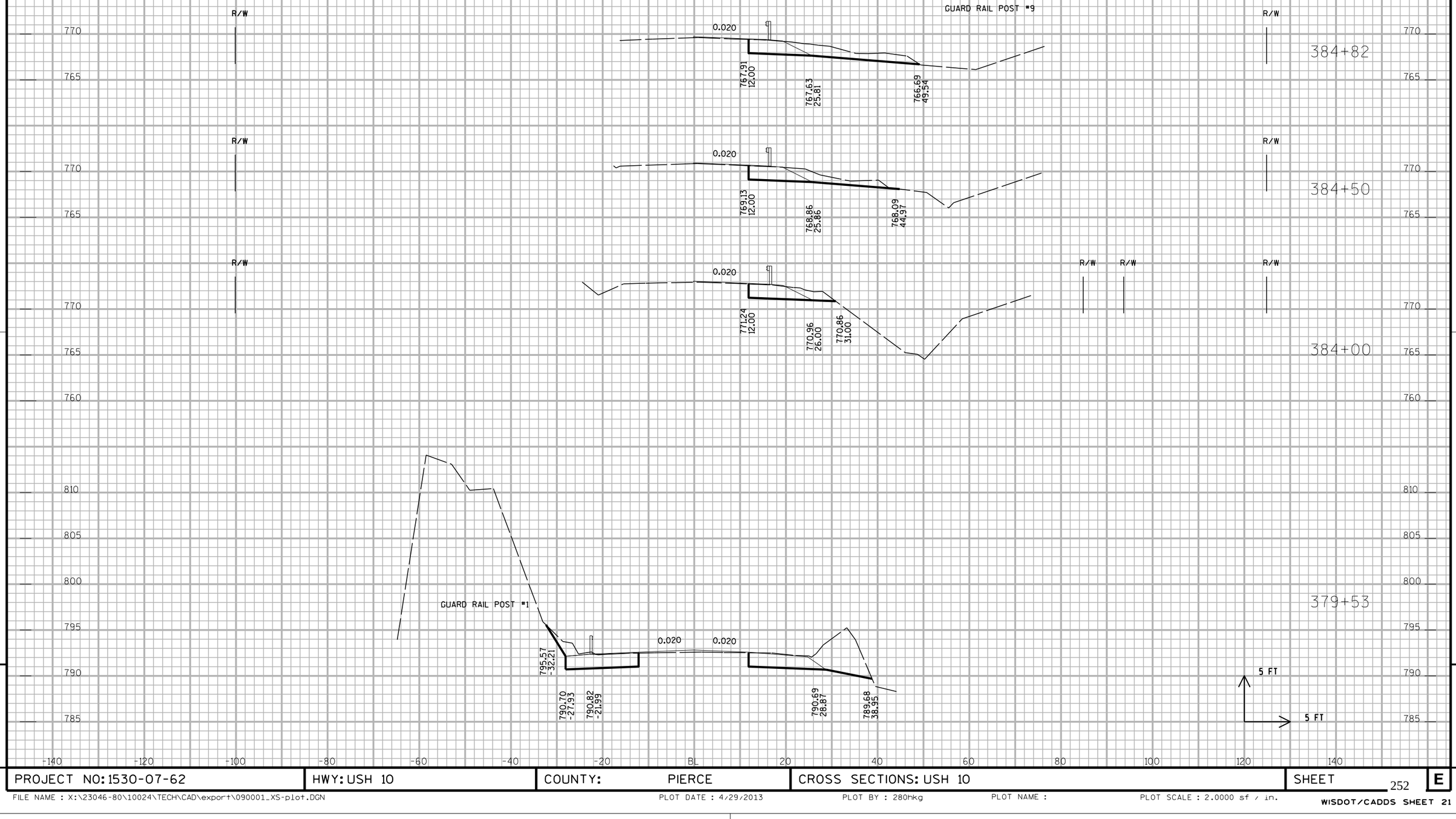

PROJECT NO: 1530-07-62	HWY: USH 10	COUNTY: PIERCE	CROSS SECTIONS: USH 10	SHEET 252	E

FILE NAME : X:\23046-80\10024\TECH\CAD\export\090001_XS-plot.DGN PLOT DATE : 4/29/2013 PLOT BY : 280hkg PLOT NAME : PLOT SCALE : 2.0000 sf / in.

WISDOT/CADDS SHEET 21

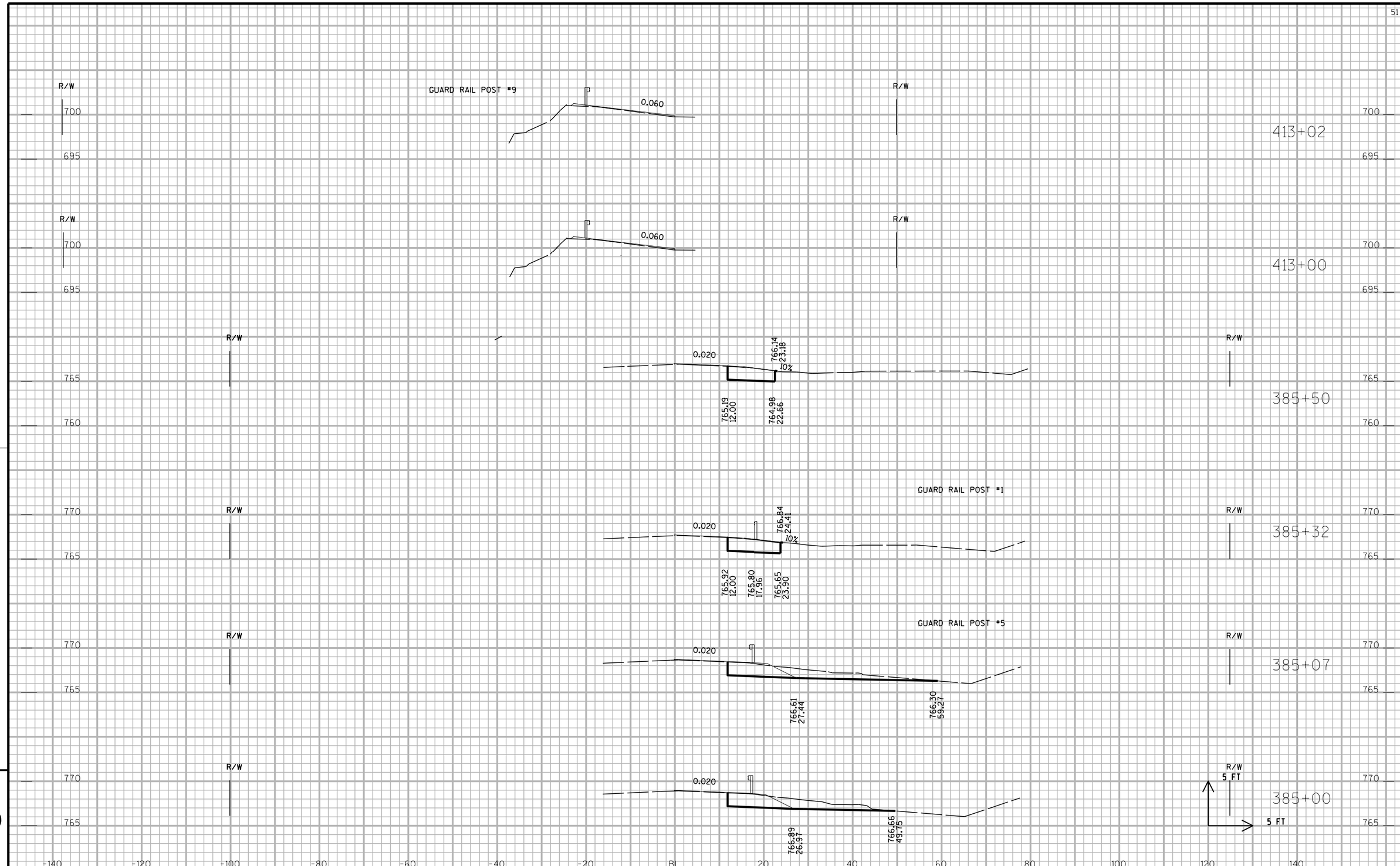

9

9

PROJECT NO:1530-07-62	HWY:USH 10	COUNTY: PIERCE	CROSS SECTIONS: USH 10	SHEET 253	E

FILE NAME : X:\23046-80\10024\TECH\CAD\export\090001_XS-plot.DGN PLOT DATE : 4/29/2013 PLOT BY : 280hkg PLOT NAME : PLOT SCALE : 2.0000 sf / in.

WISDOT/CADDS SHEET 21

GUARD RAIL POST #1

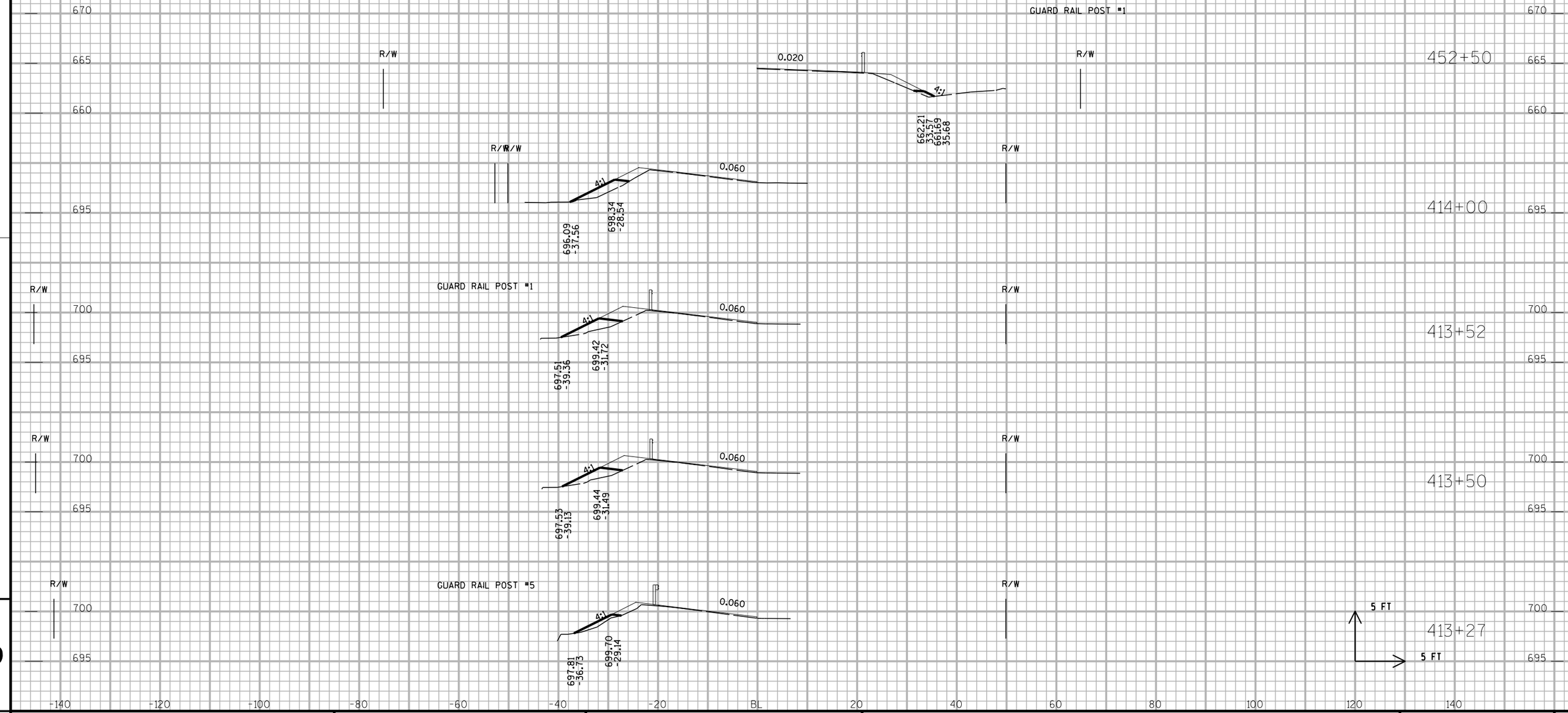

PROJECT NO: 1530-07-62	HWY: USH 10	COUNTY: PIERCE	CROSS SECTIONS: USH 10	SHEET 254	E

FILE NAME : X:\23046-80\10024\TECH\CAD\export\090001_XS-plot.DGN PLOT DATE : 4/29/2013 PLOT BY : 280hkg PLOT NAME : PLOT SCALE : 2.0000 sf / in.

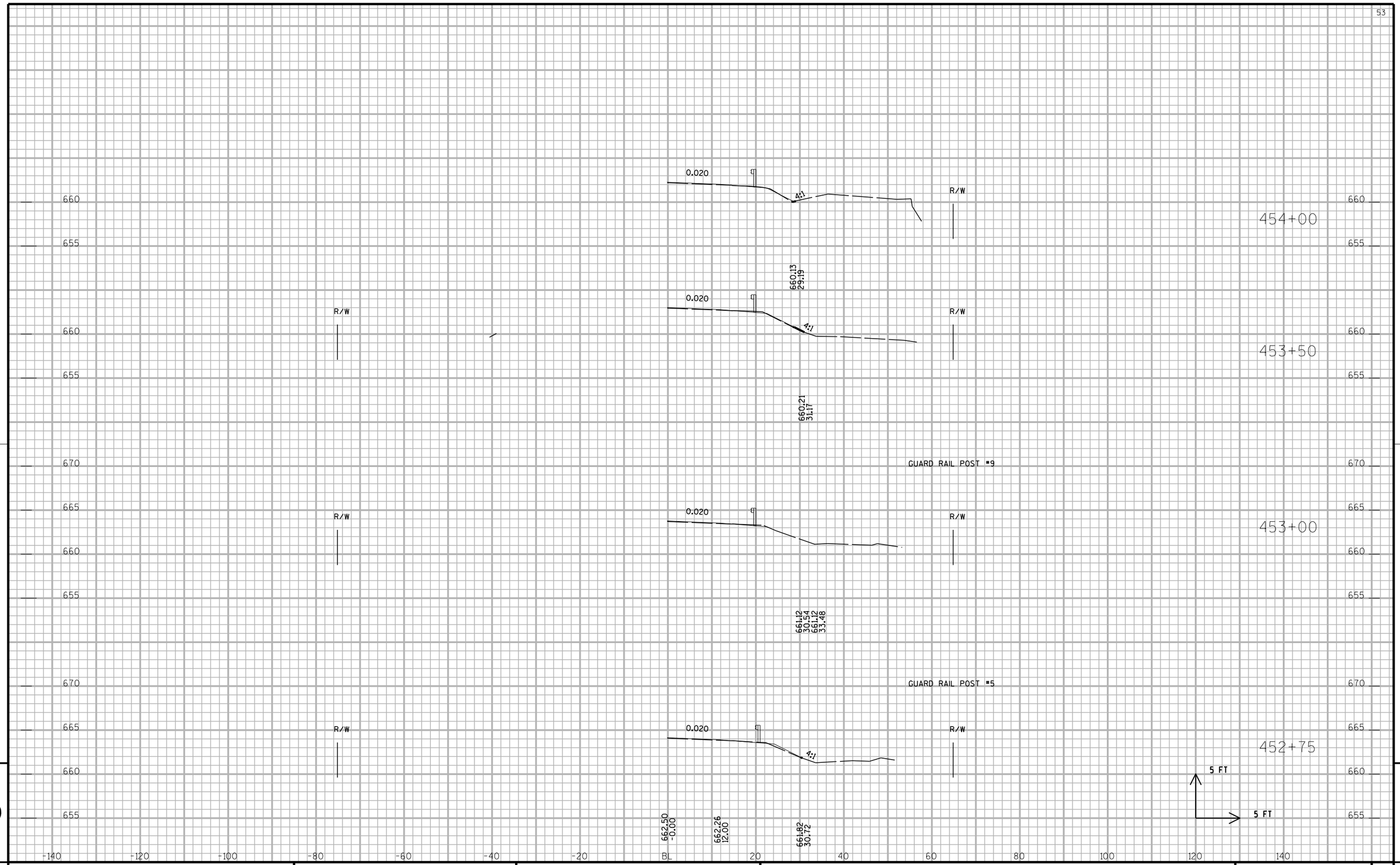

9

9

PROJECT NO: 1530-07-62	HWY: USH 10	COUNTY: PIERCE	CROSS SECTIONS: USH 10	SHEET 255	E

GUARD RAIL POST =1

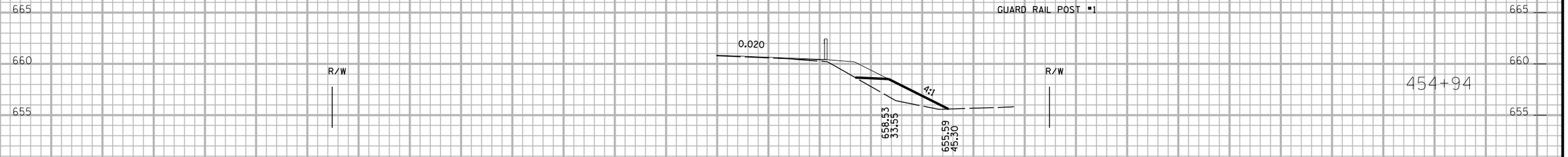

GUARD RAIL POST =5

GUARD RAIL POST =9

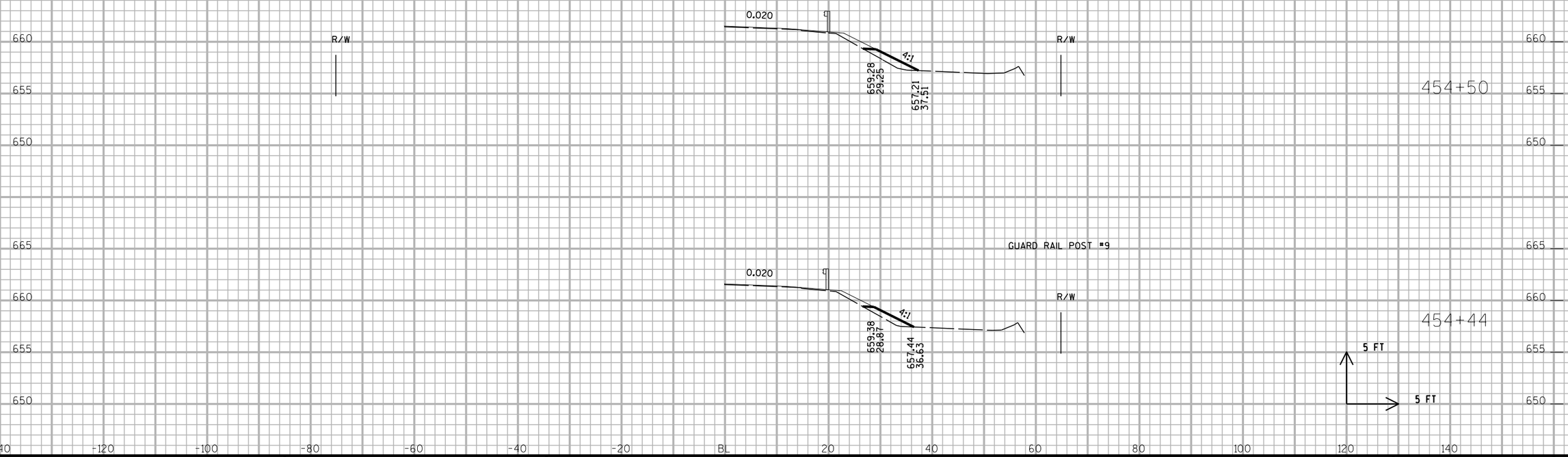

9

9

PROJECT NO: 1530-07-62	HWY: USH 10	COUNTY: PIERCE	CROSS SECTIONS: USH 10	SHEET 256	E

FILE NAME : X:\23046-80\10024\TECH\CAD\export\090001_XS-plot.DGN PLOT DATE : 4/29/2013 PLOT BY : 280hkg PLOT NAME : PLOT SCALE : 2.0000 sf / in.

WISDOT/CADDS SHEET 21

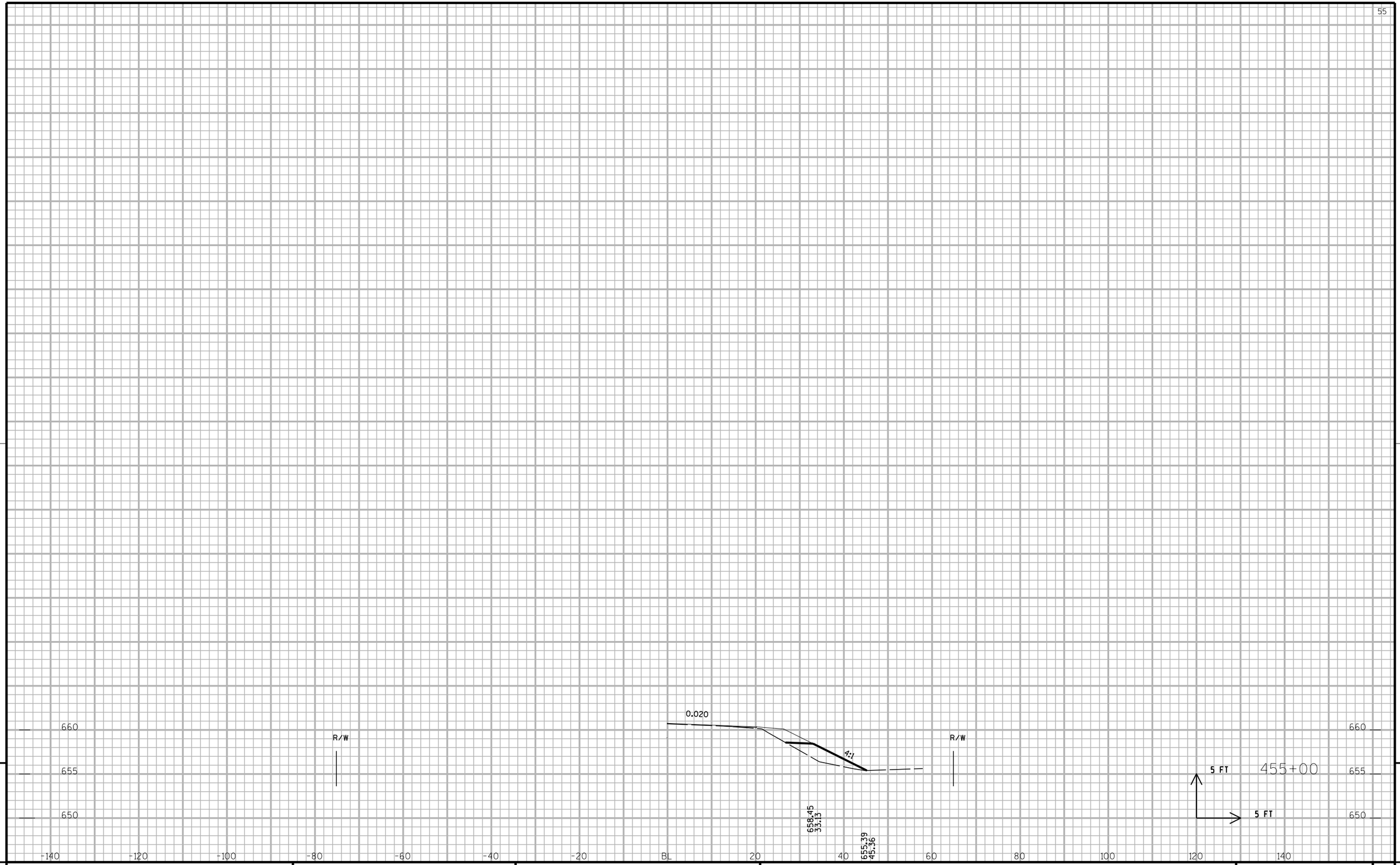

9

9

PROJECT NO: 1530-07-62	HWY: USH 10	COUNTY: PIERCE	CROSS SECTIONS: USH 10	SHEET 257	E

FILE NAME : X:\23046-80\10024\TECH\CAD\export\090001_XS-plot.DGN PLOT DATE : 4/29/2013 PLOT BY : 280hkg PLOT NAME : PLOT SCALE : 2.0000 sf / in.

WISDOT/CADDS SHEET 21

Wisconsin Department of Transportation

Dedicated people creating transportation solutions
through innovation and exceptional service.

http://www.dot.wisconsin.gov