GRE AUG 2013

PROJECT ID: 1500-32-71
WITH:

COUNTY: CALUMET

ORDER OF SHEETS

Section No.	1	Title
Section No.	2	Typical Sections and Details
Section No.	3	Estimate of Quantities
Section No.	3	Miscellaneous Quantities
Section No.	4	Right of Way Plat
Section No.	5	Plan and Profile
Section No.	6	Standard Detail Drawings
Section No.	7	Sign Plates
Section No.	8	Structure Plans
Section No.	9	Computer Earthwork Data
Section No.	9	Cross Sections

TOTAL SHEETS = 234

STATE OF WISCONSIN
DEPARTMENT OF TRANSPORTATION

PLAN OF PROPOSED IMPROVEMENT

APPLETON - MANITOWOC

USH 10 & STH 32/57 INTERSECTION

USH 10

CALUMET COUNTY

STATE PROJECT	FEDERAL PROJECT	
	PROJECT	CONTRACT
1500-32-71		

STATE PROJECT NUMBER
1500-32-71

N

BEGIN PROJECT 1500-32-71
STA 110EB+00 USH 10
Y = 544418.013
X = 892710.512

END PROJECT 1500-32-71
STA 140EB+00 USH 10

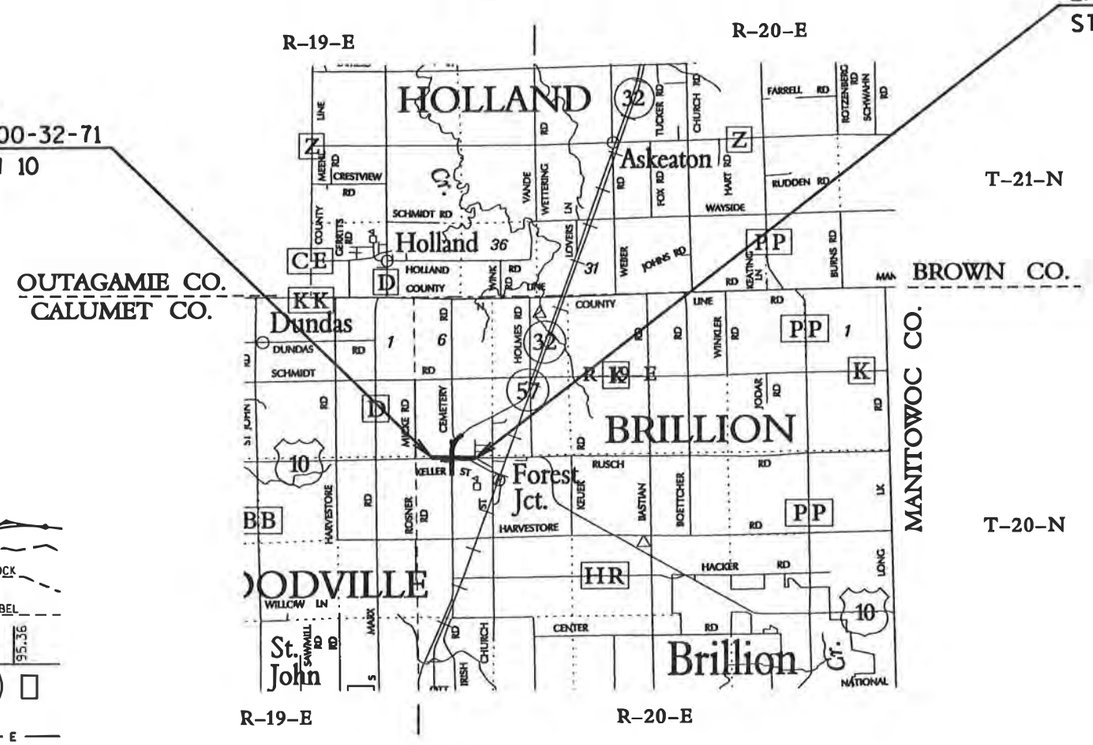

DESIGN DESIGNATION

			USH 10	STH 32/57
A.A.D.T.	2011	=	8,200	3,400
A.A.D.T.	2031	=	11,200	4,700
D.H.V.		=	1,165	525
D.D.		=	62/38	62/38
T.		=	8.8%	10.8%
DESIGN SPEED		=	60 MPH	60 MPH
ESALS		=	2,277,600	1,182,600

CONVENTIONAL SYMBOLS

PLAN
- CORPORATE LIMITS
- PROPERTY LINE
- LOT LINE
- LIMITED HIGHWAY EASEMENT
- EXISTING RIGHT OF WAY
- PROPOSED OR NEW R/W LINE
- SLOPE INTERCEPT
- REFERENCE LINE
- EXISTING CULVERT
- PROPOSED CULVERT (Box or Pipe)
- COMBUSTIBLE FLUIDS — CAUTION
- MARSH AREA
- WOODED OR SHRUB AREA

PROFILE
- GRADE LINE
- ORIGINAL GROUND
- MARSH OR ROCK PROFILE (To be noted as such) — ROCK
- SPECIAL DITCH — LABEL
- GRADE ELEVATION — 95.36
- CULVERT (Profile View)

UTILITIES
- ELECTRIC — E
- FIBER OPTIC — FO
- GAS — G
- SANITARY SEWER — SAN
- STORM SEWER — SS
- TELEPHONE — T
- WATER — W
- UTILITY PEDESTAL
- POWER POLE
- TELEPHONE POLE

LAYOUT
SCALE 0 — 1 MI.

TOTAL NET LENGTH OF CENTERLINE = 0.568 MI.

COORDINATES ON THIS PLAN ARE REFERENCED TO THE WISCONSIN COUNTY COORDINATE SYSTEM (WCCS), CALUMET COUNTY.

ORIGINAL PLANS PREPARED BY
OMNI ASSOCIATES

WISCONSIN PROFESSIONAL ENGINEER
RYAN E. BETKER
E-36778
NEENAH

STATE OF WISCONSIN
DEPARTMENT OF TRANSPORTATION

PREPARED BY

Surveyor	WisDOT NE REGION
Designer	OMNNI ASSOCIATES
Project Manager	MATTHEW HAEFS
Regional Examiner	
Regional Supervisor	REBECCA ROOYAKKERS
C.O. Examiner	

APPROVED FOR THE DEPARTMENT
DATE: 04/18/12 Matthew W Haefs PE
(Signature)

E

GENERAL NOTES

LOCATIONS OF EXISTING AND PROPOSED UTILITY FACILITIES AS SHOWN ON THE PLANS ARE APPROXIMATE. THERE MAY BE OTHER UTILITY FACILITIES WITHIN THE PROJECT AREA THAT ARE NOT SHOWN.

NO TREES OR SHRUBS ARE TO BE REMOVED WITHOUT THE APPROVAL OF THE ENGINEER.

EXCAVATION BELOW SUBGRADE (EBS) IF SHOWN ON THE CROSS SECTIONS WILL BE MEASURED AND PAID FOR AS COMMON EXCAVATION. ANTICIPATED EBS IS SHOWN ON THE PLANS, HOWEVER THE ACTUAL LIMITS AND DEPTH OF ANY EBS WILL BE DETERMINED BY THE ENGINEER IN THE FIELD. LOCATIONS OR ADDITIONAL EBS WILL BE DETERMINED BY THE ENGINEER.

ALL DISTURBED AREAS NOT OTHERWISE SURFACED ARE TO BE SALVAGED TOPSOILED, FERTILIZED, SEEDED AND MULCHED. DISTURBED AREAS ADJACENT TO LAWNS SHALL BE SEEDED WITH MIXTURE NO. 40, ALL OTHERS SHALL BE SEEDED WITH MIXTURE NO. 30.

SALVAGED TOPSOIL AREA WAS CALCULATED TO 5 FEET PAST THE SLOPE INTERCEPT. SEEDED AREA WAS CALCULATED TO THE SLOPE INTERCEPT.

ALL MANHOLE, INLETS AND APRON ENDWALLS OFFSETS ARE GIVEN TO THE CENTER OF THE STRUCTURE.

CULVERT PIPE FLOWLINE ELEVATIONS SHOWN ARE APPROXIMATE AND SHALL BE DETERMINED BY THE ENGINEER IN THE FIELD.

CURB AND GUTTER RADII ARE SHOWN TO THE FACE OF CURB.

THE ELEVATION OF THE EXISTING CONCRETE UNDERLYING USH 10 AND STH 32/57 AS SHOWN ON THE CROSS SECTIONS IS APPROXIMATE. EXCAVATION DEPTHS MAY VARY FOR REMOVAL OF THE CONCRETE.

THE EXACT LOCATIONS AND LIMITS OF PRIVATE ENTRANCES, FIELD ENTRANCES AND COMMERCIAL ENTRANCES SHALL BE DETERMINED BY THE ENGINEER IN THE FIELD.

DRIVEWAYS SHALL BE REPLACED IN KIND, BASE AGGREGATE 1 1/4-INCH WILL BE USED AT ALL APPLICABLE DRIVES AND UNDER ALL ASPHALT DRIVEWAYS.

IMMEDIATELY AFTER CONSTRUCTION OF ANY INLET, CONTRACTOR SHALL CONSTRUCT THE EROSION CONTROL PROTECTION IN ACCORDANCE WITH THE DETAILS SHOWN ON THE PLANS TO MINIMIZE SEDIMENTATION IN THE INLET AND STORM SEWER.

THE EXACT LOCATIONS OF ALL EROSION CONTROL ITEMS SHALL BE DETERMINED BY THE ENGINEER IN THE FIELD.

DISTANCES SHOWN ON THIS PLAN ARE GROUND DISTANCES.

PRIOR TO ORDING DRAINAGE PIPES AND STRUCTURES, THE CONTRACTOR SHALL VERIFY RELATED INFORMATION IN THE PLAN WITH THE ENGINEER.

UTILITIES

ELECTRIC	WE ENERGIES 333 WEST EVERETT STREET - A279 MILWAUKEE, WI 53203 ATTN: DAN SANDE TELEPHONE: 414-221-4578 EMAIL: DAN.SANDE@WE-ENERGIES.COM
ELECTRIC & GAS	WISCONSIN PUBLIC SERVICE CORPORATION 700 NORTH ADAMS STREET PO BOX 19001 GREEN BAY WI 54307-9001 ATTN: LORI BUTRY TELEPHONE: 920-433-1703 EMAIL: LABUTRY@INTEGRYSGROUP.COM
ELECTRIC	AMERICAN TRANSMISSION COMPANY 801 O'KEEFE ROAD PO BOX 6113 DEPERE, WI 54115 ATTN: MIKE OLSEN TELEPHONE: 920-338-6582 EMAIL: MOLSEN@ATCLLC.COM
TELEPHONE	TDS METROCOM 10 COLLEGE AVENUE SUITE 218A APPLETON, WI 54911 ATTN: STEVE JAKUBIEC TELEPHONE: 920-882-4166 EMAIL: JAKUBIEC@TDSTELECOM.COM
CABLE TV	TIME WARNER CABLE 1001 KENNEDY AVE KIMBERLY, WI 54136 ATTN: LARRY PIHLSTROM TELEPHONE: 920-831-9211 EMAIL: LARRY.PIHLSTROM@TWCABLE.COM
SANITARY SEWER AND WATERMAINS	FOREST JUNCTION UTILITIES NORTH 8873 CHURCH STREET PO BOX 132 FOREST JUNCTION, WI 54123 ATTN: NANCY BRANDES TELEPHONE: 920-989-2100

DESIGNER NOTES

DESIGN, PLANS, SPECIFICATIONS, AND ESTIMATE FOR SANITARY SEWER, WATER MAIN PROVIDED BY ROBERT E. LEE AND ASSOCIATES.

DIGGERS HOTLINE

Call 811 3 Work Days Before You Dig
or Toll Free (800) 242-8511
Hearing Impaired TDD (800) 542-2289
www.DiggersHotline.com

OTHER CONTACTS

COUNTY SURVEYOR	AREO METRIC INC 4020 TECHNOLOGY PARKWAY SHEBOYGAN, WI 53083 WAUPACA, WI 54981 ATTN: PETER HATAS TELEPHONE: 920-457-8194
DNR LIAISON	WISCONSIN DEP. OF NATURAL RESOURCES NORTHEAST REGION 2984 SHAWANO AVE GREEN BAY, WI 54313 ATTN: MATT SCHAEVE TELEPHONE: 920-662-5472 EMAIL: MATTHEW.SCHAEVE@WISCONSIN.GOV
DESIGN CONTACT	OMNNI ASSOCIATES ONE SYSTEMS DRIVE APPLETON WI, 54914 ATTN: RYAN BETKER TELEPHONE: 920-830-6157 EMAIL: RYAN.BETKER@OMNNI.COM

ORDER OF "SECTION 2" SHEETS

SHEET TITLE

GENERAL NOTES
PROJECT OVERVIEW
TYPICAL SECTIONS
CONSTRUCTION DETAILS
PAVING DETAILS
EROSION CONTROL PLAN
UTILITY PLAN
LANDSCAPING
EXISTING SIGN REMOVALS
PERMANENT SIGNING
LIGHTING
TRAFFIC SIGNAL REMOVALS
PAVEMENT MARKING
TRAFFIC CONTROL PLAN
ALIGNMENT PLAN

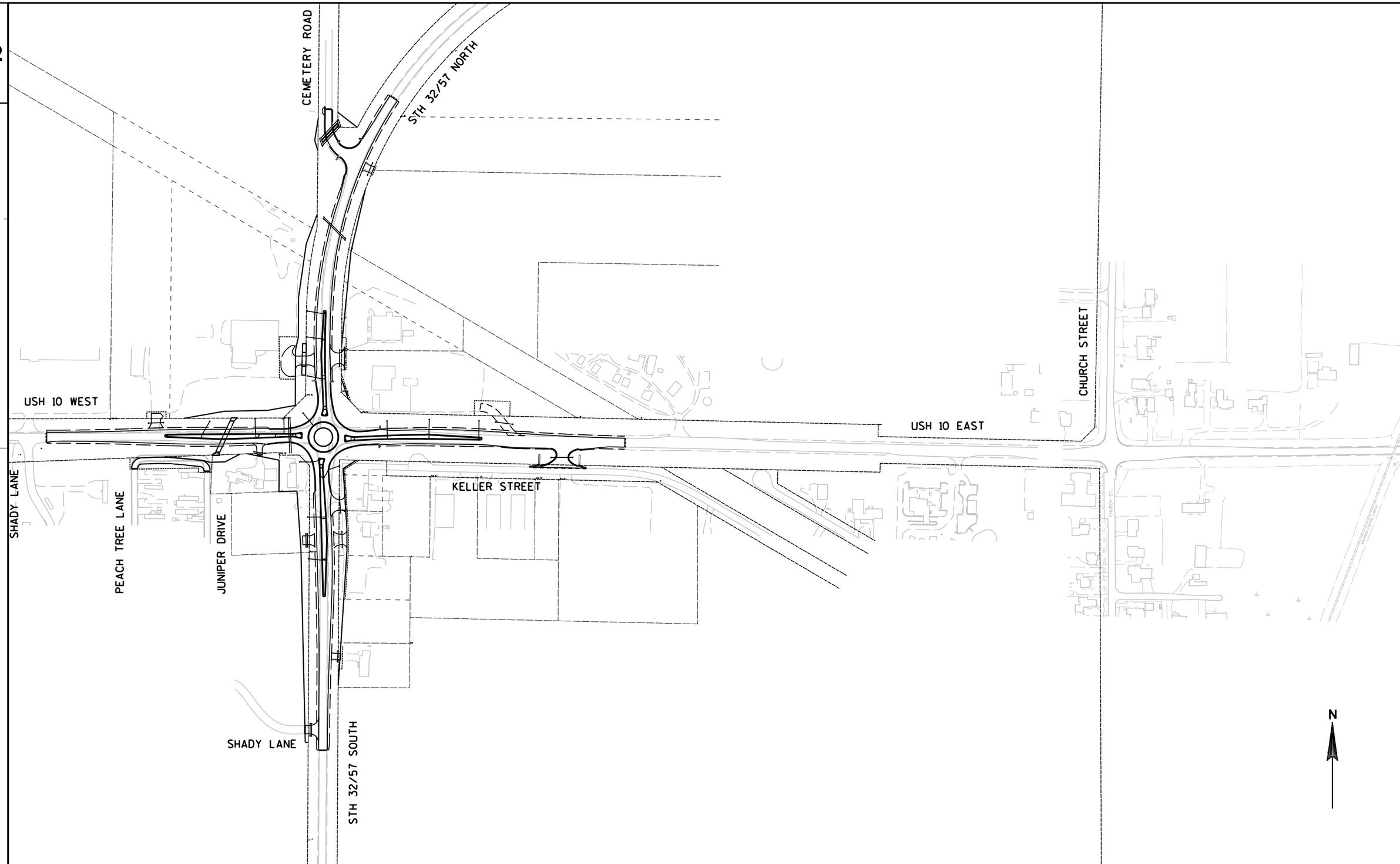

2

PROJECT NO:1500-32-71	HWY:USH 10	COUNTY:CALUMET	PROJECT OVERVIEW	SCALE, FEET 0 300	SHEET 3	E

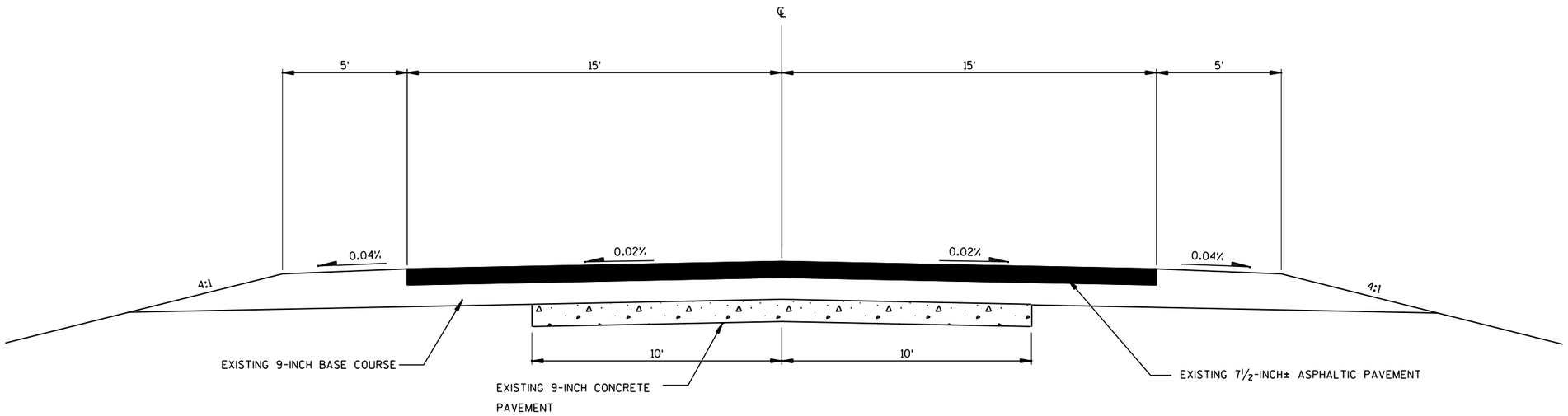

EXISTING TYPICAL SECTION STH 32/57

APPROXIMATE STA 147+25 - 154+50

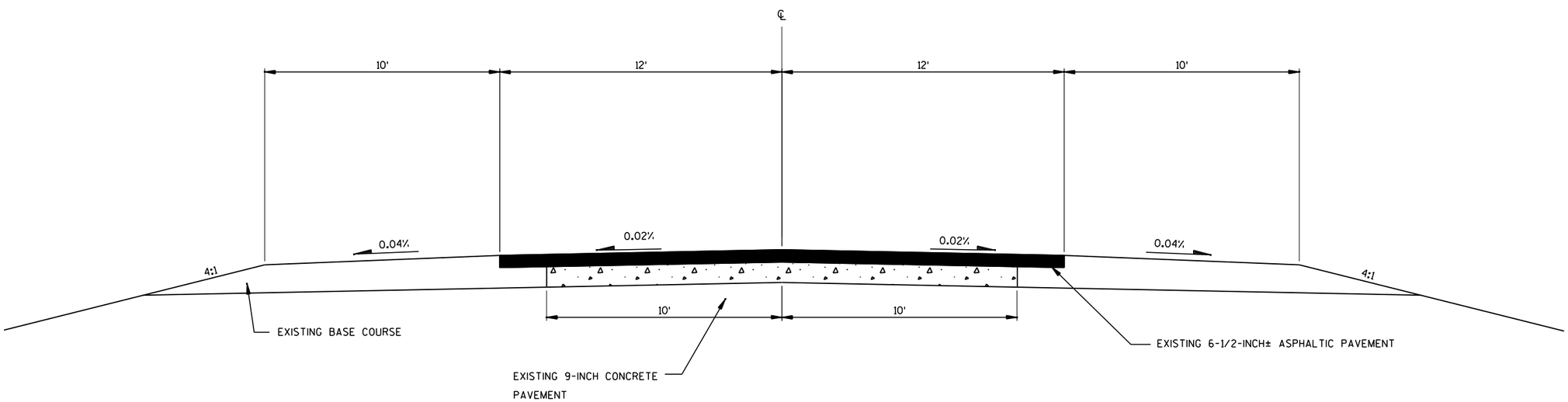

EXISTING TYPICAL SECTION USH 10

APPROXIMATE STA 110+00 - 116+00

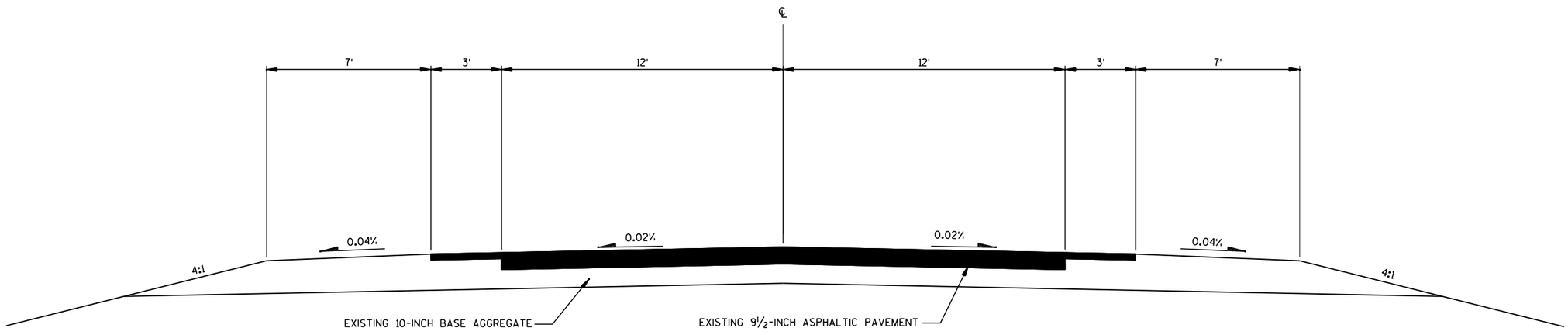

EXISTING TYPICAL SECTION USH 10

INTERSECTION-STA 140+00

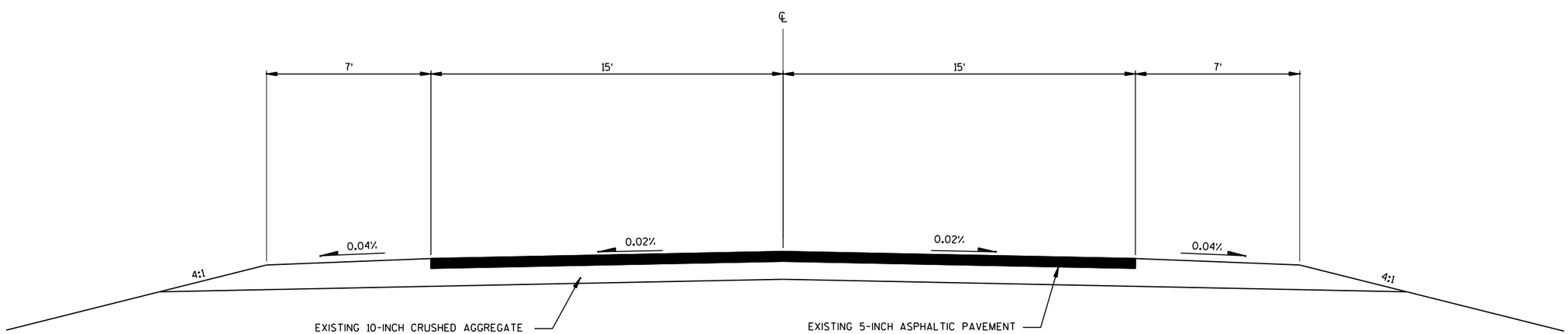

EXISTING TYPICAL SECTION USH 10 & STH 32/57

USH 10
STA 116+00-INTERSECTION APPROXIMATE

STH 32/57
STA 154+50-170+00

PROJECT NO:1500-32-71	HWY:USH 10	COUNTY:CALUMET	TYPICAL SECTIONS	SHEET 5	E

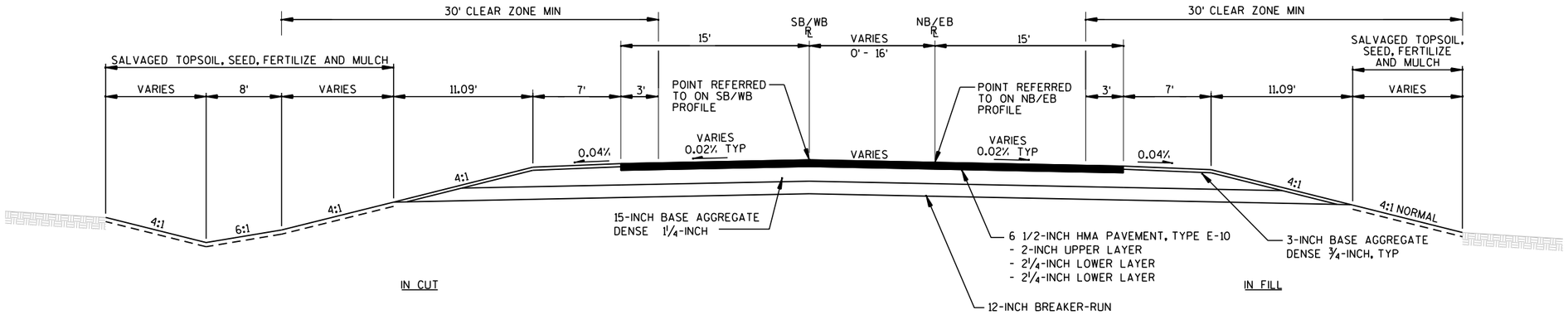

FINISHED TYPICAL RURAL SECTION STH 32/57 AND USH 10

USH 10
STA 110+00.00 - 114+02.00
STA 135+14.08 - 140+00.00

STH 32/57
STA 147+25 - 152+45.36
STA 162+35.10 - 170+00.00

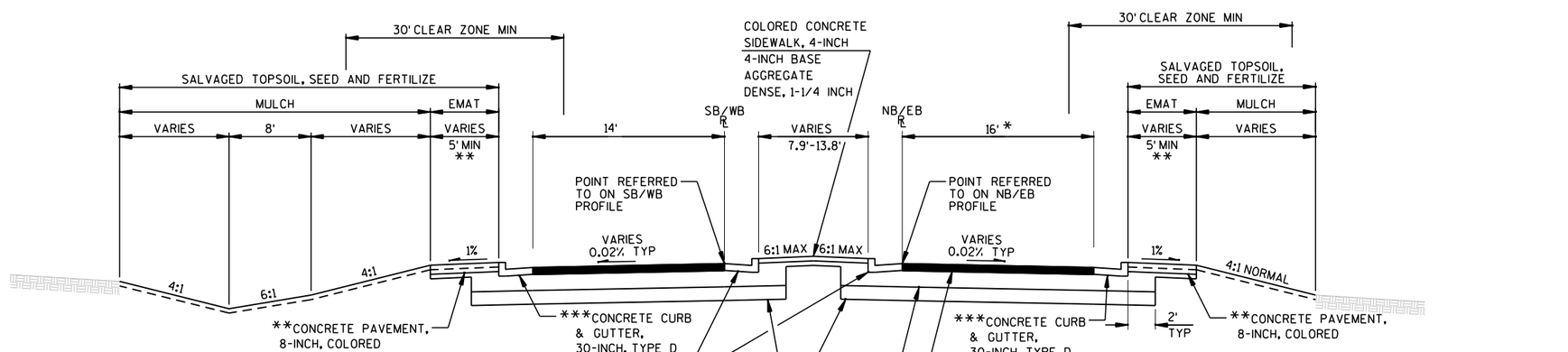

** CONCRETE PAVEMENT, 8-INCH, COLORED OVER 4-INCH BASE AGGREGATE DENSE
STA 117'EB'+87.80 TO 118'EB'+62.71 RT
STA 130'WB'+52.31 TO 131'WB'+27.38 LT

***CONCRETE CURB & GUTTER, 30-INCH 4-INCH SLOPED SPECIAL
STA 117'EB'+87.80 TO 118'EB'+62.71 RT
STA 130'WB'+52.31 TO 131'WB'+27.38 LT

FINISHED TYPICAL URBAN SECTION STH 32/57 AND USH 10

USH 10
STA 117+44.74 - 118+62.70
STA 130+51.51 - 131+71.17

STH 32/57
STA 155+90.7 - 157+09.53
*STA 158+82.10 - 160+00.56 - (14')

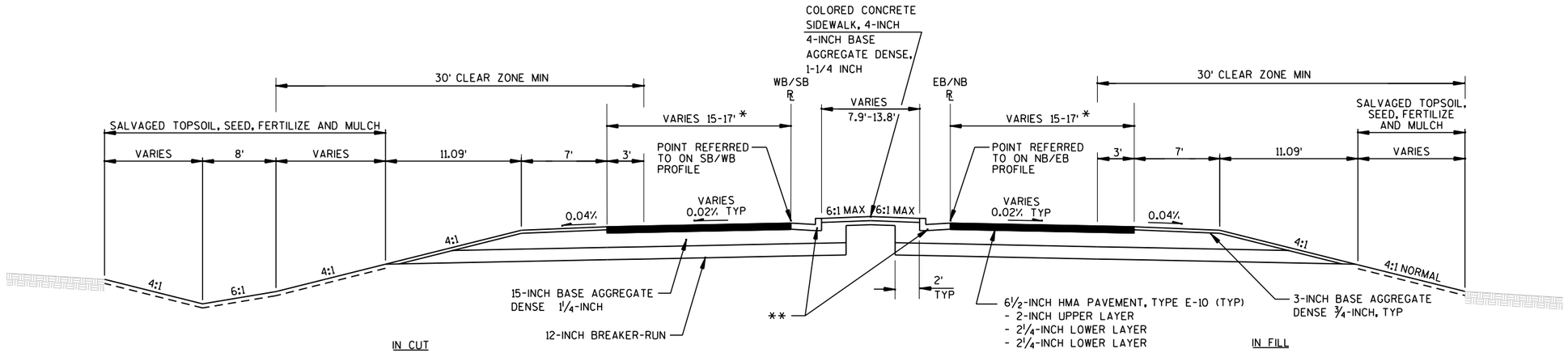

FINISHED TYPICAL URBAN SECTION STH 32/57 AND USH 10

* ROUNDABOUT ENTRANCE AND EXIT VARIES, SEE ROUNDABOUT DETAILS

** CURB ANG GUTTER 4-INCH SLOPED 36-INCH TYPE D

USH 10
STA 114+02.00 - 116+65.00
STA 132+51.30 - 135+14.08

STH 32/57
STA 152+45.36 - 155+08.16
STA 160+93.10 - 162+35.10

CURB AND GUTTER 30-INCH TYPE D

USH 10
STA 116+65.00 - 117+44.74
STA 131+71.17 - 132+51.30

STH 32/57
STA 155+08.16 - 155+90.72
STA 160+00.56 - 160+93.10

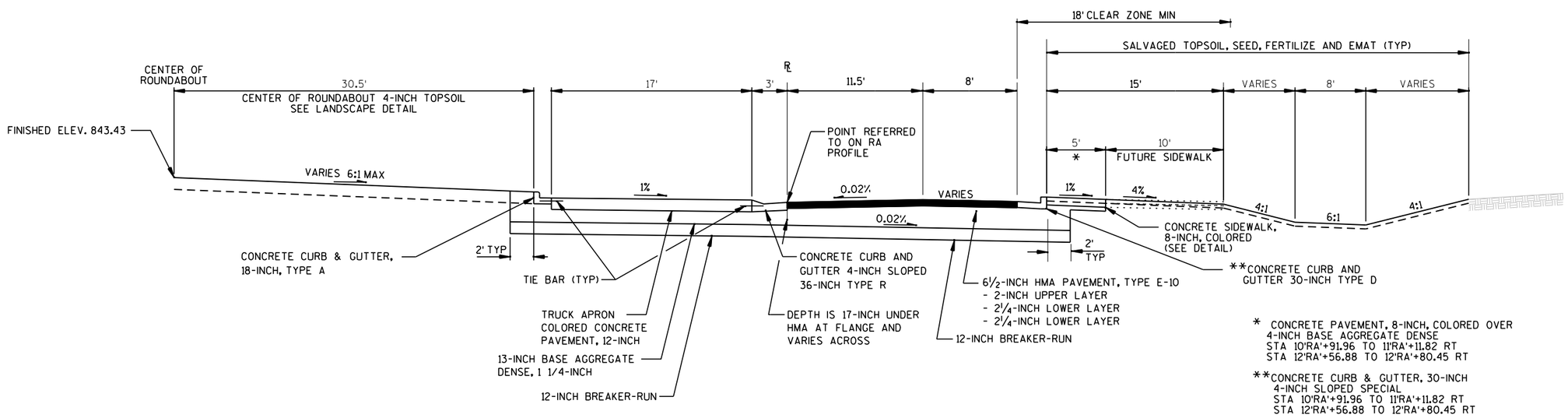

* CONCRETE PAVEMENT, 8-INCH, COLORED OVER 4-INCH BASE AGGREGATE DENSE
STA 10'RA'+91.96 TO 11'RA'+11.82 RT
STA 12'RA'+56.88 TO 12'RA'+80.45 RT

**CONCRETE CURB & GUTTER, 30-INCH 4-INCH SLOPED SPECIAL
STA 10'RA'+91.96 TO 11'RA'+11.82 RT
STA 12'RA'+56.88 TO 12'RA'+80.45 RT

FINISHED TYPICAL ROUNDABOUT SECTION STH 32/57 AND USH 10

PROJECT NO:1500-32-71	HWY:USH 10	COUNTY:CALUMET	TYPICAL SECTIONS	SHEET 7	E

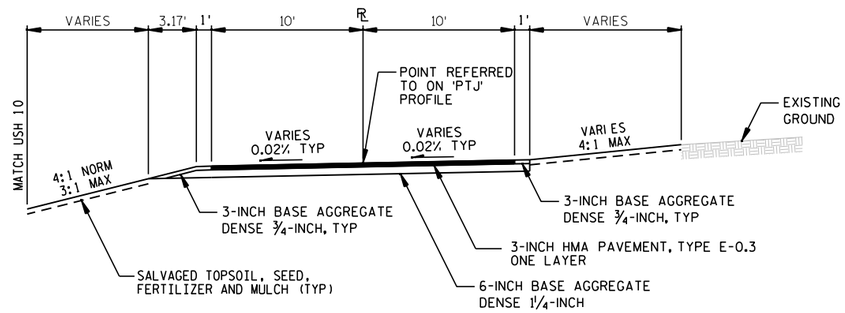

FINISHED TYPICAL PRIVATE ROAD SECTION

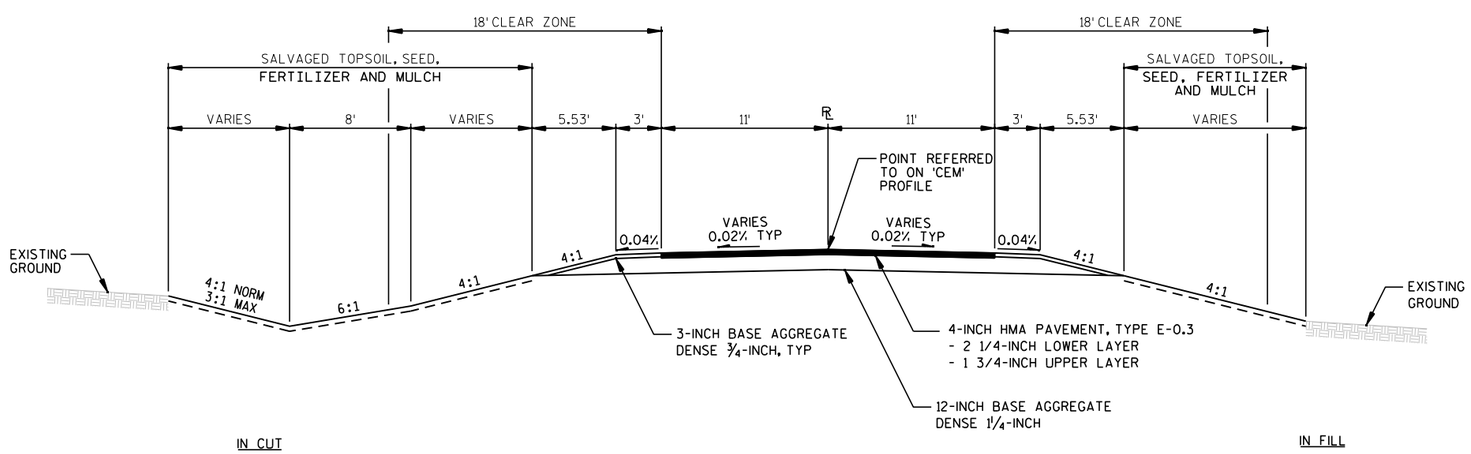

FINISHED TYPICAL CEMETERY ROAD SECTION

PROJECT NO:1500-32-71	HWY:USH 10	COUNTY:CALUMET	TYPICAL SECTIONS	SHEET 8	E

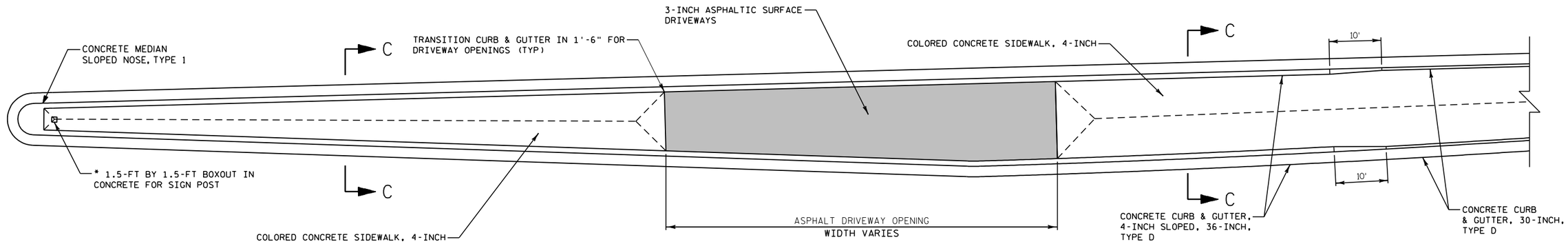

NOTE:

NOTIFY THE REGIONAL TRAFFIC UNIT AT 920-492-5653 A MINIMUM OF TWO WEEKS PRIOR TO THE NEED FOR SIGN PLACEMENT TO ALLOW FOR STAKING OF ANY PERMANENT SIGNING REQUIRED ON THE PROJECT.

* LOCATION OF BOX OUT VARIES DEPENDENT UPON SIGN WIDTH. BOX OUT SHALL BE PLACED IN A LOCATION TO PROVIDE A MINIMUM 1' OFFSET FROM FACE OF CURB TO EDGE OF SIGN.

** SEE SIGN DETAILS FOR POST SPACING.

*** INSTALL TRANSITION NOSE INCIDENTAL TO OTHER PAY ITEMS

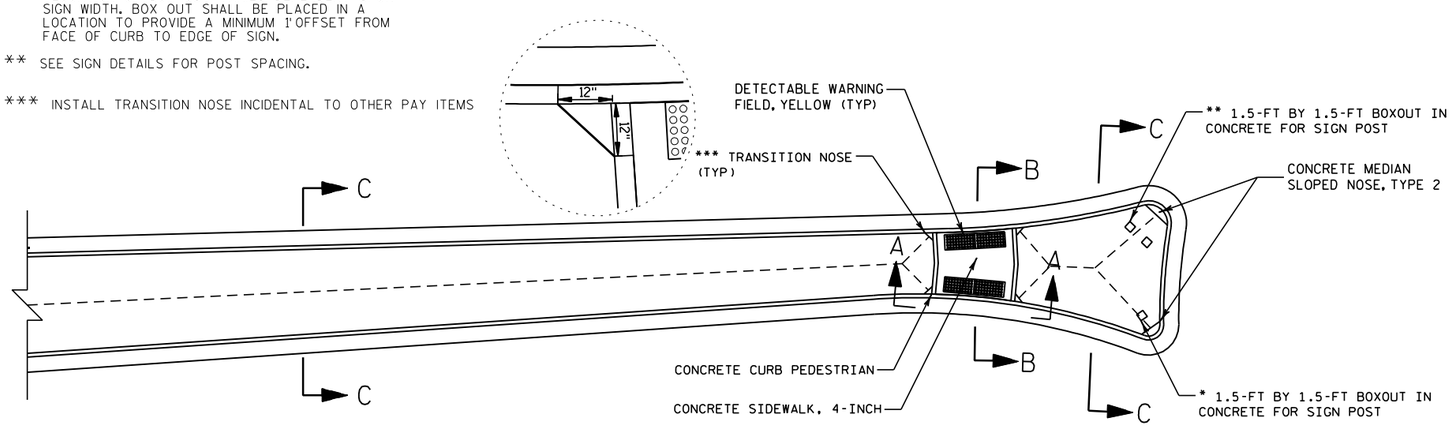

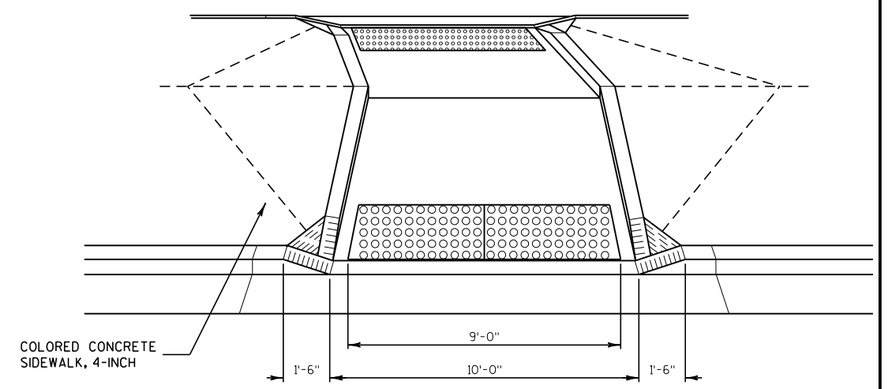

SECTION A-A

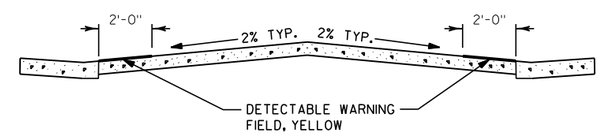

SECTION B-B

PROPOSED MEDIAN HEIGHT (ABOVE TOP OF CURB)
0.5 FT MINIMUM TO 1.5 FT MAXIMUM

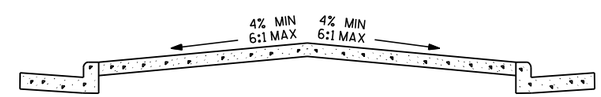

SECTION C-C

TYPICAL SPLITTER ISLAND DETAILS

PROJECT NO:1500-31-71	HWY:USH 10	COUNTY:CALUMET	CONSTRUCTION DETAILS	SHEET 9	E

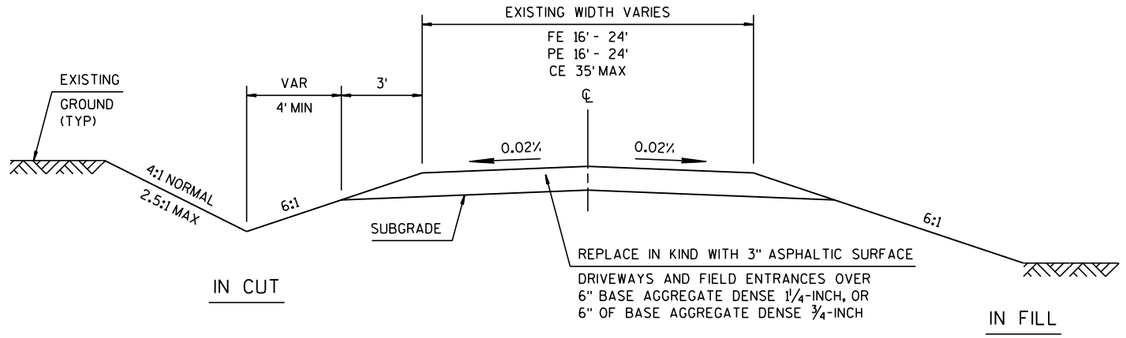

TYPICAL CROSS SECTION FOR PRIVATE DRIVE OR FIELD ENTRANCE

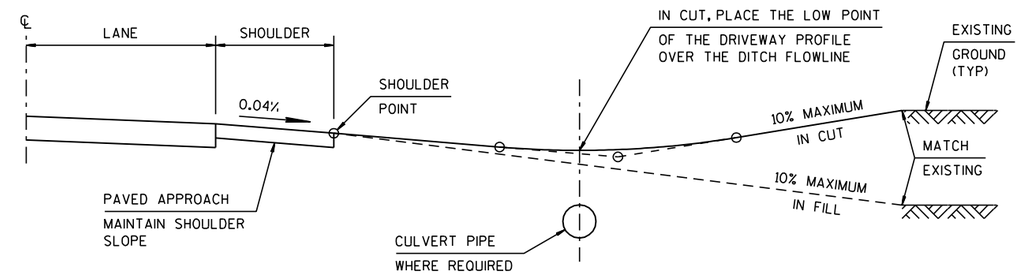

TYPICAL DRIVEWAY PROFILES

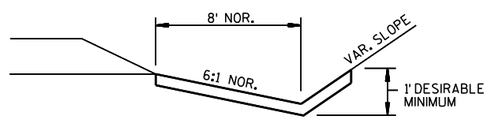

EROSION MAT DETAIL FOR DITCHES

NOTE:

1. WHEN A STORM SEWER PIPE IS PLACED ABOVE THE SUBGRADE LINE NO BREAKER SHALL BE USE TO BACKFILL AROUND THE PIPE. BASE AGGERGATE DENSE 1¼- INCH SHALL BE USED IN PLACE OF BREAKER FOR THE WIDTH OF THE TRENCH.
2. ALL REQUIREMENTS OF SECTION 607 OF THE STANDARD SPECIFICATIONS STILL APPLY.
3. SEE STORM SEWER PIPE QUANTITY TABLE FOR LOCATIONS

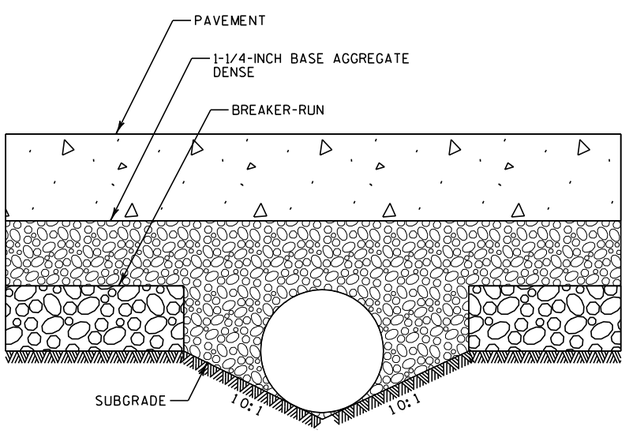

STORM SEWER PIPE WITH MINIMAL COVER

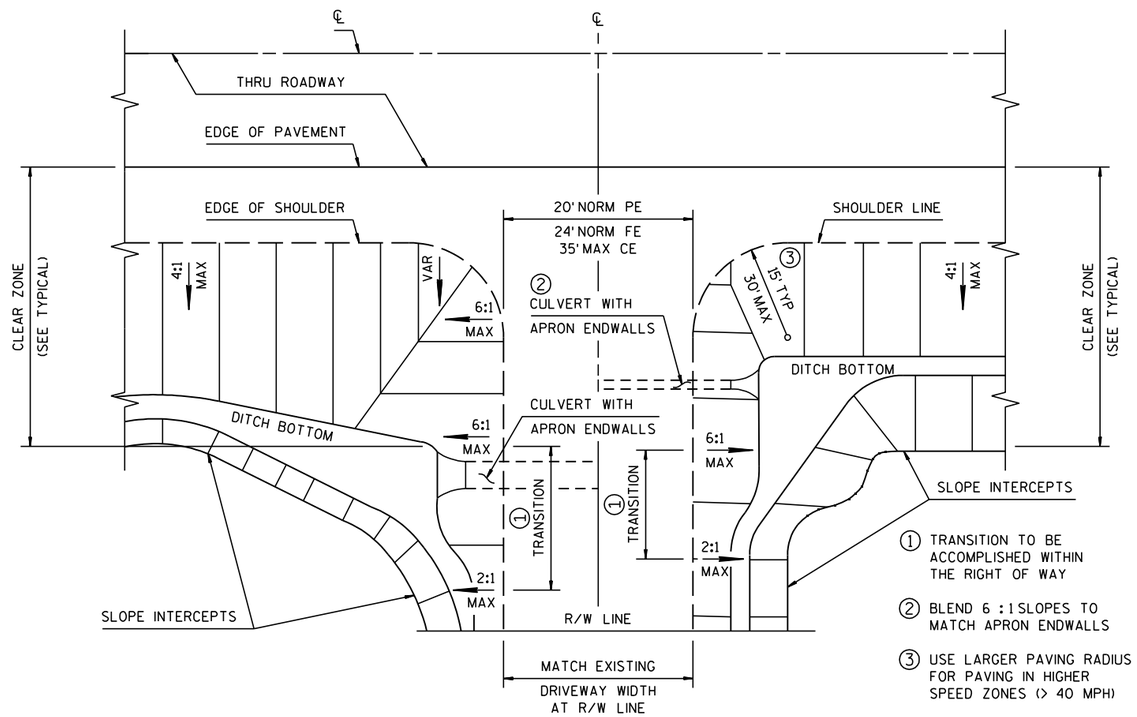

FOR CULVERTS OVER 24" DIAMETER

FOR CULVERTS 24" DIAMETER & LESS

PLAN VIEW

RURAL DRIVEWAY GRADING AND/OR PAVING DETAIL

2

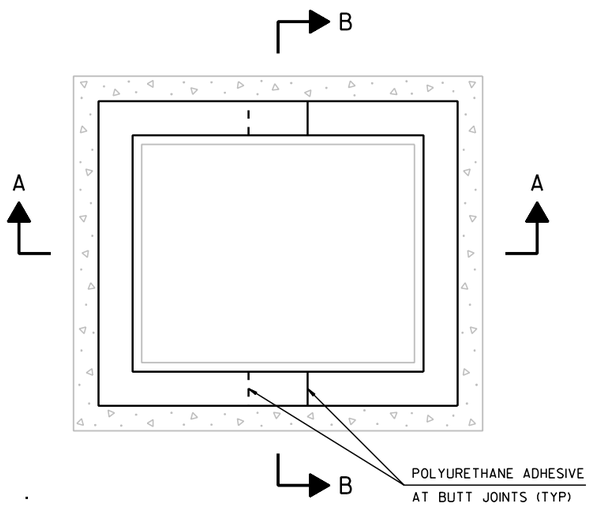

PLAN VIEW

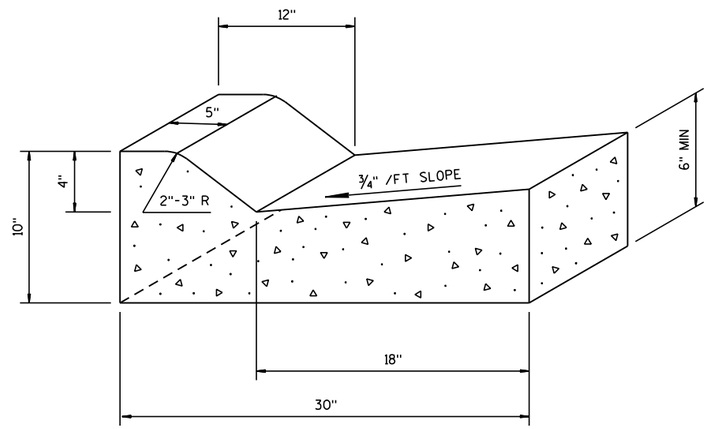

CONCRETE CURB & GUTTER, 30-INCH, 4-INCH SLOPED, SPECIAL

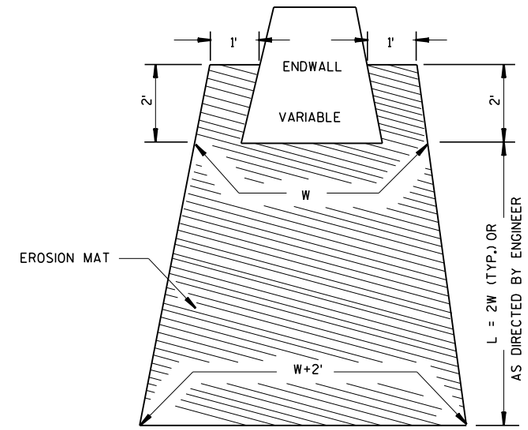

EROSION MAT TREATMENT AT CULVERTS

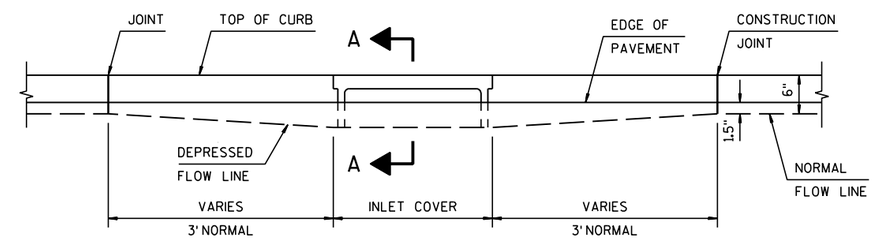

NOTE: ALL CUTS MADE TO RUBBER ADJUSTMENT RINGS WILL BE PERPENDICULAR AND PROVIDE A TIGHT JOINT.

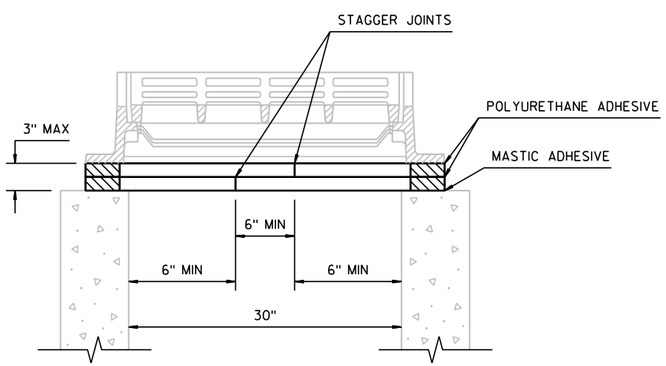

SECTION A-A

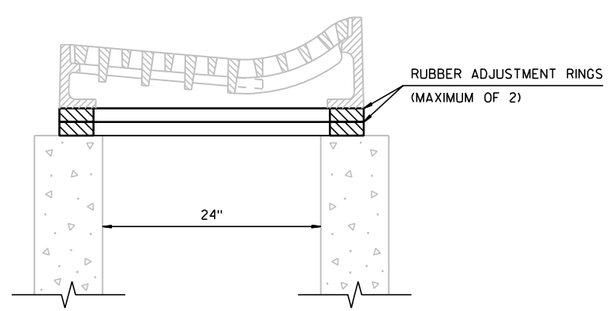

SECTION B-B

RUBBER RING CUTTING DETAIL FOR INLET TYPE 2, SPECIAL

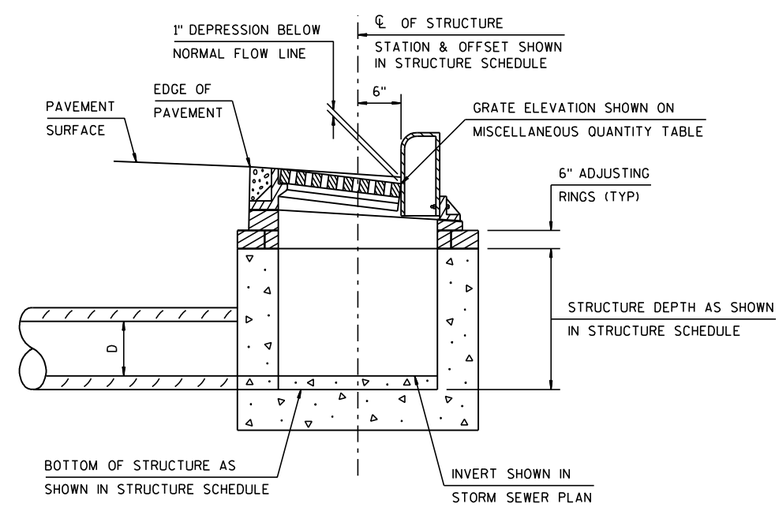

SECTION A-A

DETAIL OF CURB AND GUTTER AT INLETS

2

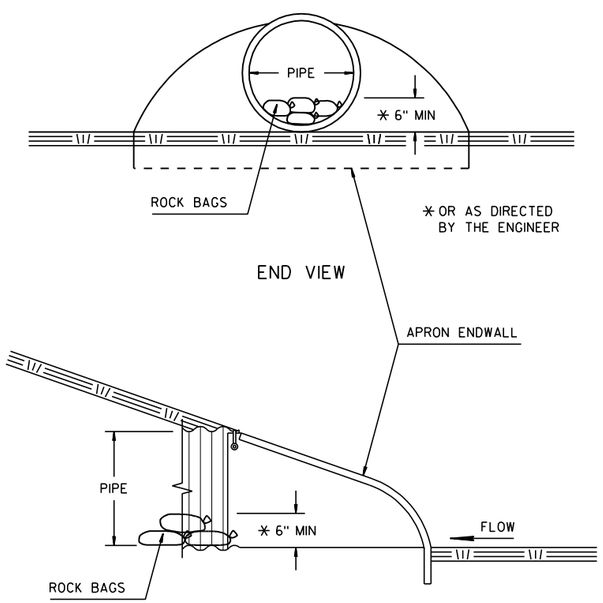

CULVERT PIPE CHECKS

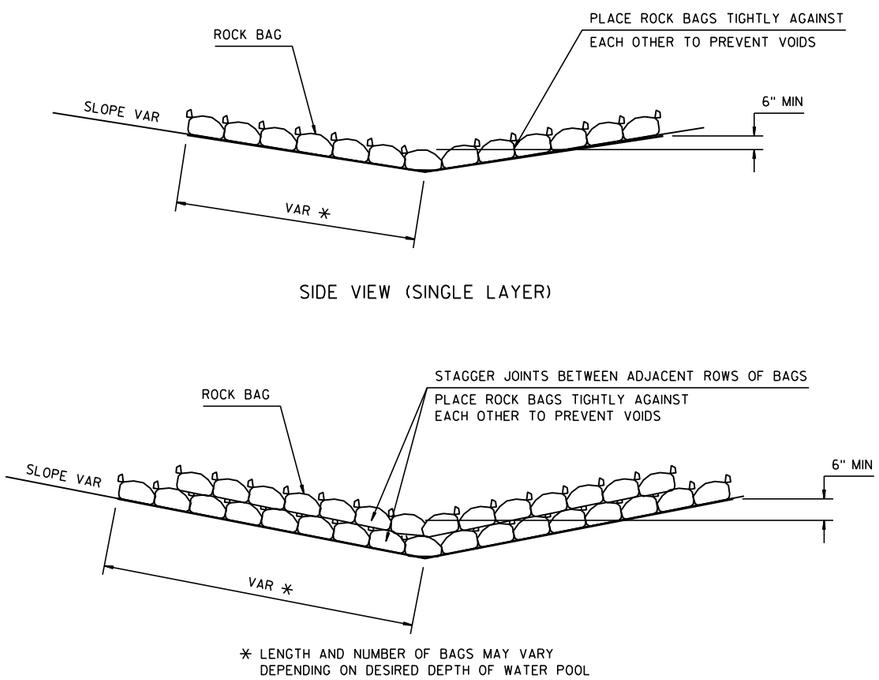

ROCK BAGS DITCH CHECK

PAID AS ROCK BAGS

PROJECT NO:1500-32-71	HWY:USH 10	COUNTY:CALUMET	CONSTRUCTION DETAILS	SHEET 12	E

2

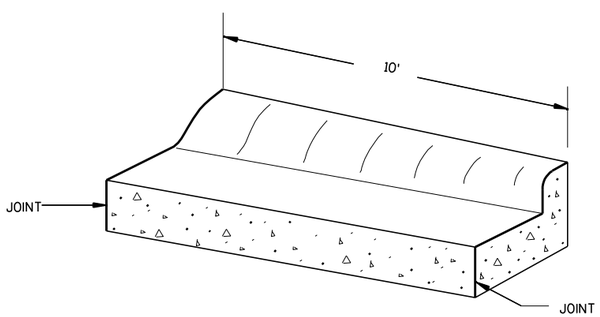

TRANSITION DETAIL

CONCRETE CURB & GUTTER 4-INCH SLOPED 36-INCH, TYPE D
TO CONCRETE CURB & GUTTER 30-INCH, TYPE D
(TO BE MEASURED & PAID FOR AS
CONC C&G 4-INCH SLOPE 36-INCH, TYPE D)

2

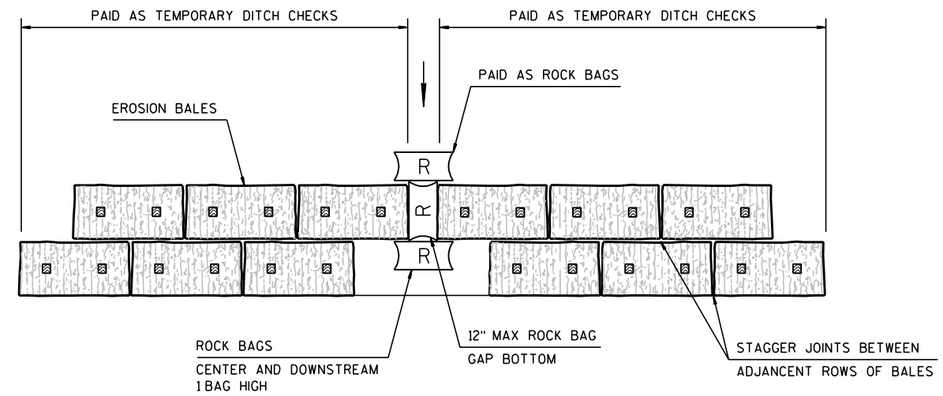

PLAN VIEW

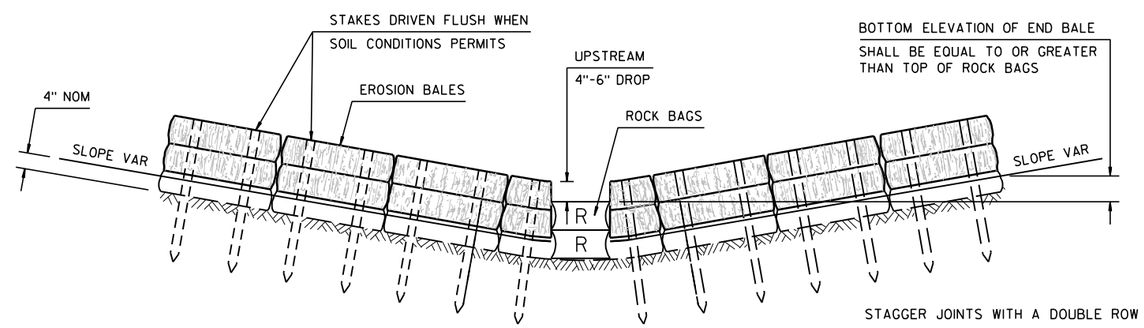

FRONT ELEVATION

GENERAL NOTES

DETAILS OF CONSTRUCTION, MATERIALS AND WORKMANSHIP NOT SHOWN ON THIS DRAWING SHALL CONFORM TO THE PERTINENT REQUIREMENTS OF THE STANDARD SPECIFICATIONS.

TEMPORARY DITCH CHECKS WITH ROCK BAG RELIEF

PROJECT NO:1500-32-71	HWY:USH 10	COUNTY:CALUMET	CONSTRUCTION DETAILS	SHEET 13	E

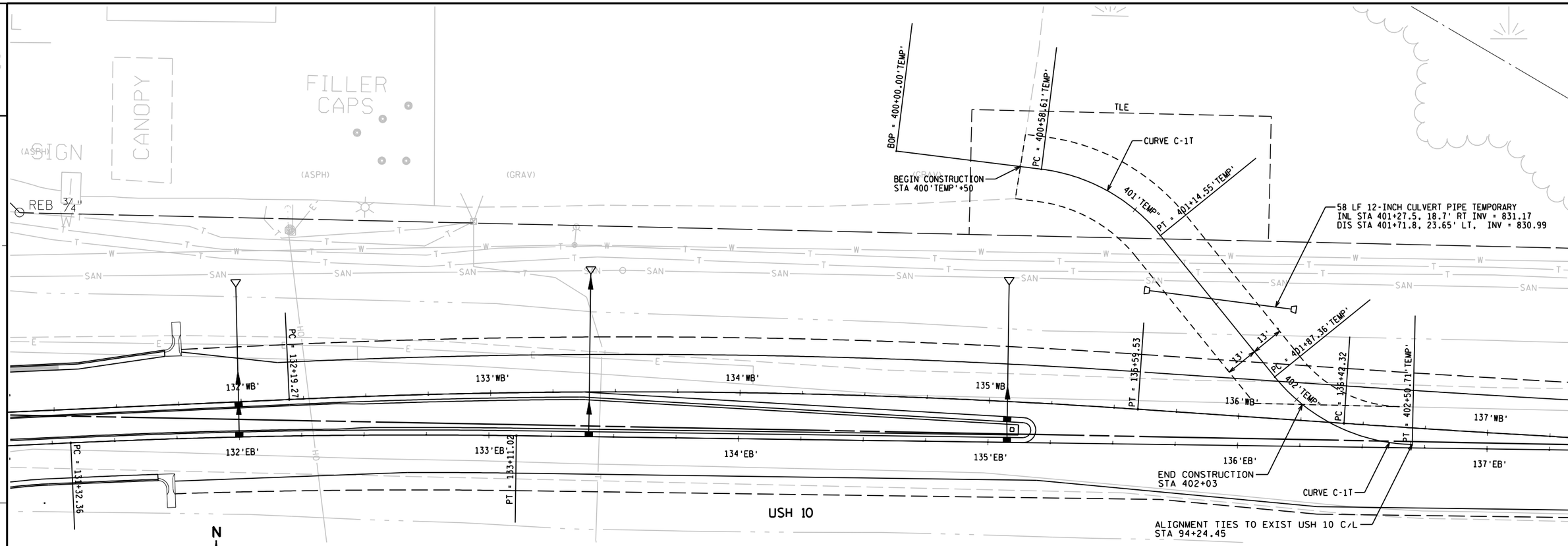

ITEM	CONTROL POINT	STATION	NORTHING	EASTING	DIRECTION	DISTANCE	DEFLECTION ANGLE	DELTA ANGLE	DEGREE OF CURVE - ARC	CHORD DIRECTION	TANGENT	RADIUS	ARC LENGTH
	BOP	400+00.00	544523.330	894122.013	S82°52'02"E	58.615							
	PC	400+58.61	544516.052	894180.174									
C-1T	RADIUS	N/A	544443.617	894171.110				43°54'02"	78°29'15"	S60°55'01"E	29.420	73.000	55.933
	PI	400+88.03	544512.399	894209.367			43°54'02"						
	PT	401+14.55	544489.525	894227.868	S38°58'00"E	72.812							
	PC	401+87.36	544432.912	894273.658									
C-2T	RADIUS	N/A	544478.820	894330.416				49°43'17"	78°29'15"	S63°49'39"E	33.825	73.000	63.350
	PI	402+21.18	544406.613	894294.929			49°43'17"						
	PT	402+50.71	544405.839	894328.745	S88°41'17"E	0.000							

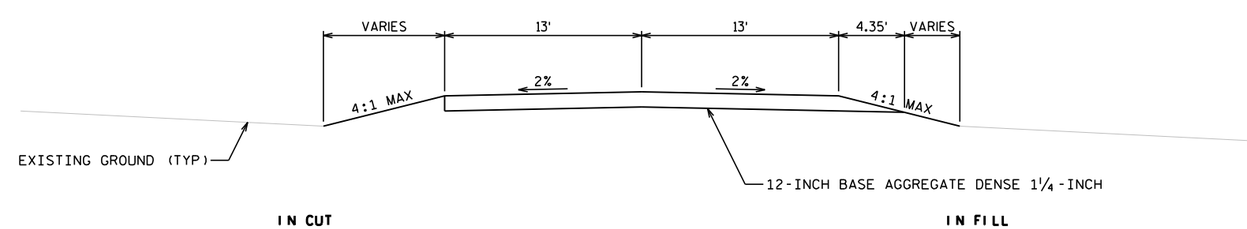

FINISHED TYPICAL SECTION FOR TEMPORARY DRIVEWAY

POINT	STATION	OFFSET	DESCRIPTION	NORTHING	EASTING
11	114+02.30	5.00 R	CURB 3' RAD	544421.195	893112.805
12	113+24.23	45.00 L	DWY 30' RAD	544469.242	893033.330
13	114+03.97	43.08 L	DWY 20' RAD	544469.294	893113.530
14	114+13.73	45.00 L	DWY 30' RAD	544471.406	893123.304

Alignment Name : USH 10 WEST WESTBOUND
Beginning Station : 110+00.00
Ending Station : 118+64.11

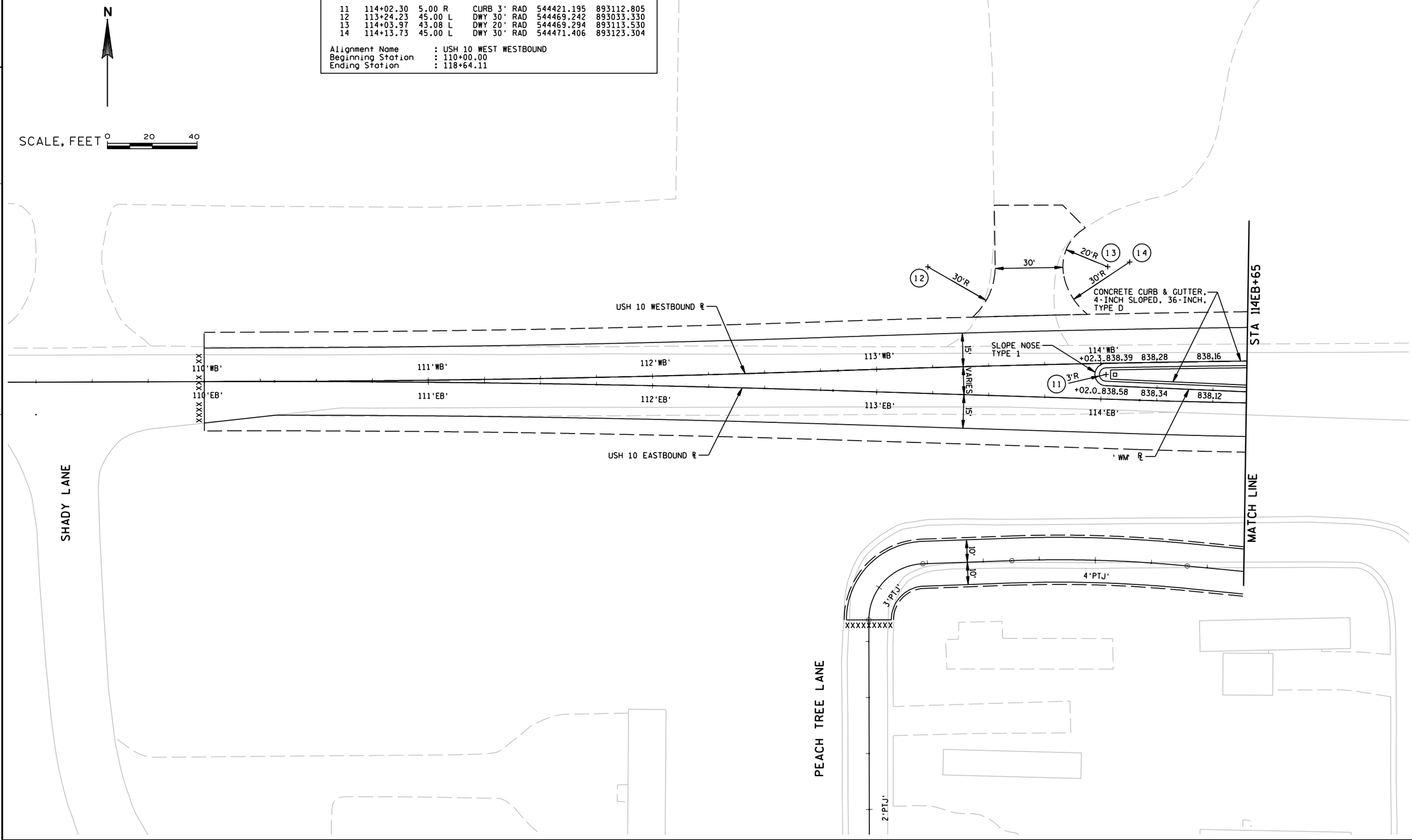

PROJECT NO:1500-32-71	HWY:USH 10	COUNTY:CALUMET	PAVING DETAILS - USH 10 WEST	SHEET 15	E

POINT	STATION	OFFSET	DESCRIPTION	NORTHING	EASTING
15	116+87.71	51.96 R	DWY 20' RAD	544376.537	893398.365
16	117+45.84	54.64 R	DWY 20' RAD	544374.147	893456.508
17	118+28.92	2.50 R	SIDEWALK	544426.708	893539.348
18	118+29.07	6.08 R	SIDEWALK	544423.127	893539.560
19	118+28.71	9.69 R	SIDEWALK	544419.514	893539.228
20	118+38.70	2.50 R	SIDEWALK	544427.300	893549.330
21	118+38.51	6.84 R	SIDEWALK	544422.965	893549.587
22	118+37.75	11.14 R	SIDEWALK	544418.599	893549.186
23	118+55.85	5.00 R	CURB 3' RAD	544428.060	893567.210
24	118+53.18	17.32 R	CURB 2' RAD	544415.395	893567.387

Alignment Name : USH 10 WEST WESTBOUND
Beginning Station : 110+00.00
Ending Station : 118+64.11

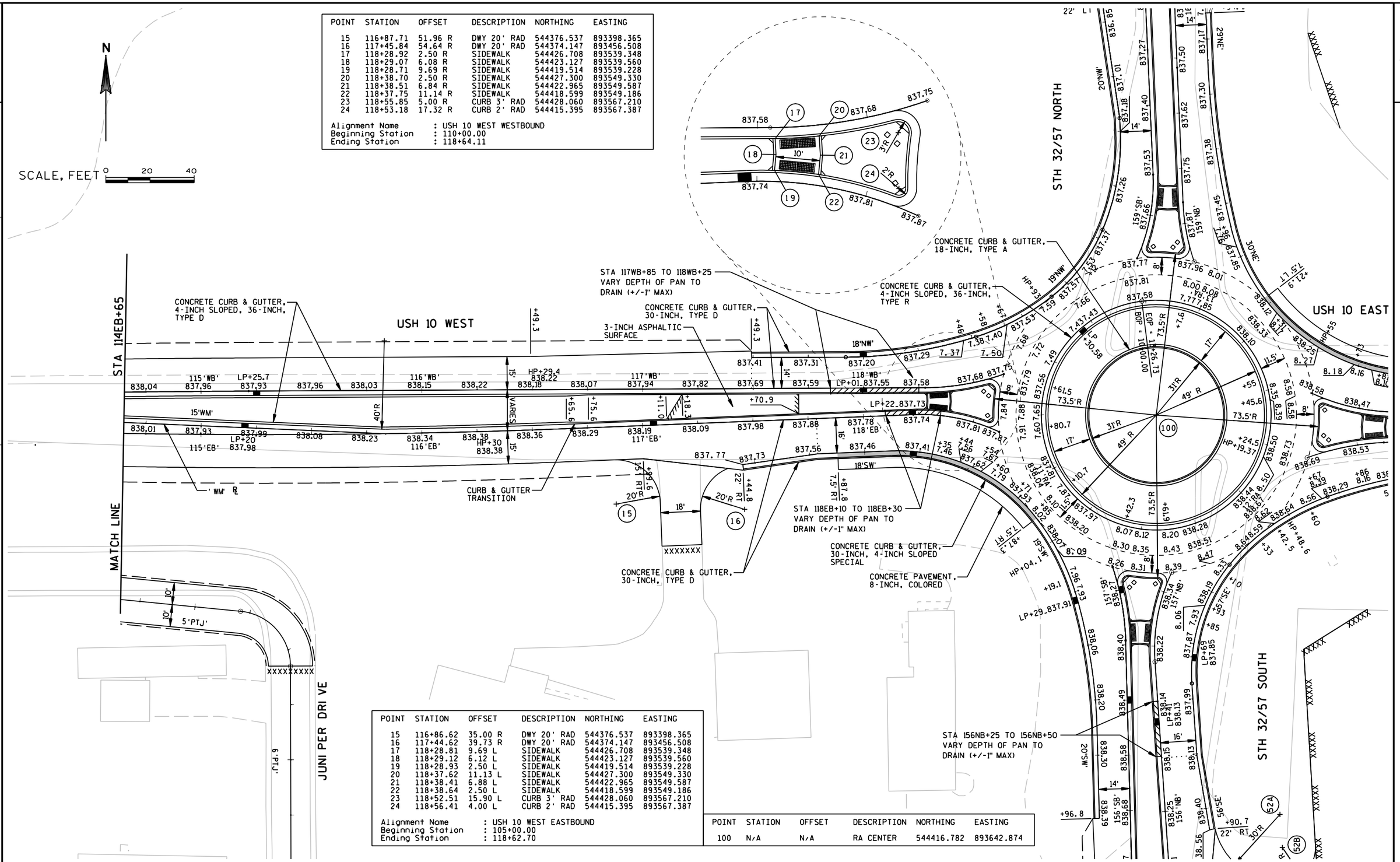

POINT	STATION	OFFSET	DESCRIPTION	NORTHING	EASTING
15	116+86.62	35.00 R	DWY 20' RAD	544376.537	893398.365
16	117+44.62	39.73 R	DWY 20' RAD	544374.147	893456.508
17	118+28.81	9.69 L	SIDEWALK	544426.708	893539.348
18	118+29.12	6.12 L	SIDEWALK	544423.127	893539.560
19	118+28.93	2.50 L	SIDEWALK	544419.514	893539.228
20	118+37.62	11.13 L	SIDEWALK	544427.300	893549.330
21	118+38.41	6.88 L	SIDEWALK	544422.965	893549.587
22	118+38.64	2.50 L	SIDEWALK	544418.599	893549.186
23	118+52.51	15.90 L	CURB 3' RAD	544428.060	893567.210
24	118+56.41	4.00 L	CURB 2' RAD	544415.395	893567.387

Alignment Name : USH 10 WEST EASTBOUND
Beginning Station : 105+00.00
Ending Station : 118+62.70

POINT	STATION	OFFSET	DESCRIPTION	NORTHING	EASTING
100	N/A	N/A	RA CENTER	544416.782	893642.874

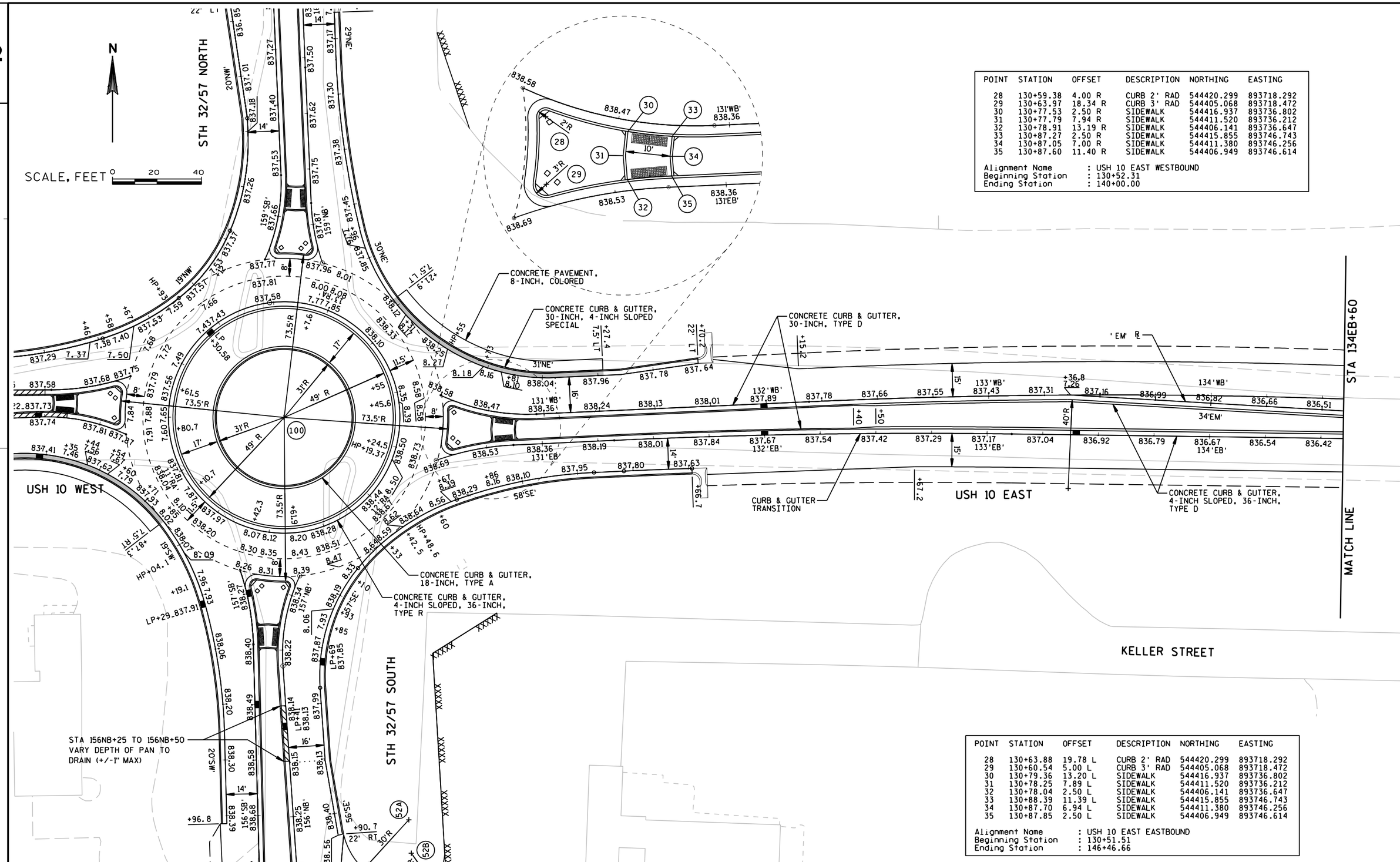

POINT	STATION	OFFSET	DESCRIPTION	NORTHING	EASTING
28	130+59.38	4.00 R	CURB 2' RAD	544420.299	893718.292
29	130+63.97	18.34 R	CURB 3' RAD	544405.068	893718.472
30	130+77.53	2.50 R	SIDEWALK	544416.937	893736.802
31	130+77.79	7.94 R	SIDEWALK	544411.520	893736.212
32	130+78.91	13.19 R	SIDEWALK	544406.141	893736.647
33	130+87.27	2.50 R	SIDEWALK	544415.855	893746.743
34	130+87.05	7.00 R	SIDEWALK	544411.380	893746.256
35	130+87.60	11.40 R	SIDEWALK	544406.949	893746.614

Alignment Name : USH 10 EAST WESTBOUND
Beginning Station : 130+52.31
Ending Station : 140+00.00

POINT	STATION	OFFSET	DESCRIPTION	NORTHING	EASTING
28	130+63.88	19.78 L	CURB 2' RAD	544420.299	893718.292
29	130+60.54	5.00 L	CURB 3' RAD	544405.068	893718.472
30	130+79.36	13.20 L	SIDEWALK	544416.937	893736.802
31	130+78.25	7.89 L	SIDEWALK	544411.520	893736.212
32	130+78.04	2.50 L	SIDEWALK	544406.141	893736.647
33	130+88.39	11.39 L	SIDEWALK	544415.855	893746.743
34	130+87.70	6.94 L	SIDEWALK	544411.380	893746.256
35	130+87.85	2.50 L	SIDEWALK	544406.949	893746.614

Alignment Name : USH 10 EAST EASTBOUND
Beginning Station : 130+51.51
Ending Station : 146+46.66

POINT	STATION	OFFSET	DESCRIPTION	NORTHING	EASTING
36	135+14.14	11.12 R	CURB 3' RAD	544411.593	894172.910

Alignment Name : USH 10 EAST WESTBOUND
Beginning Station : 130+52.31
Ending Station : 140+00.00

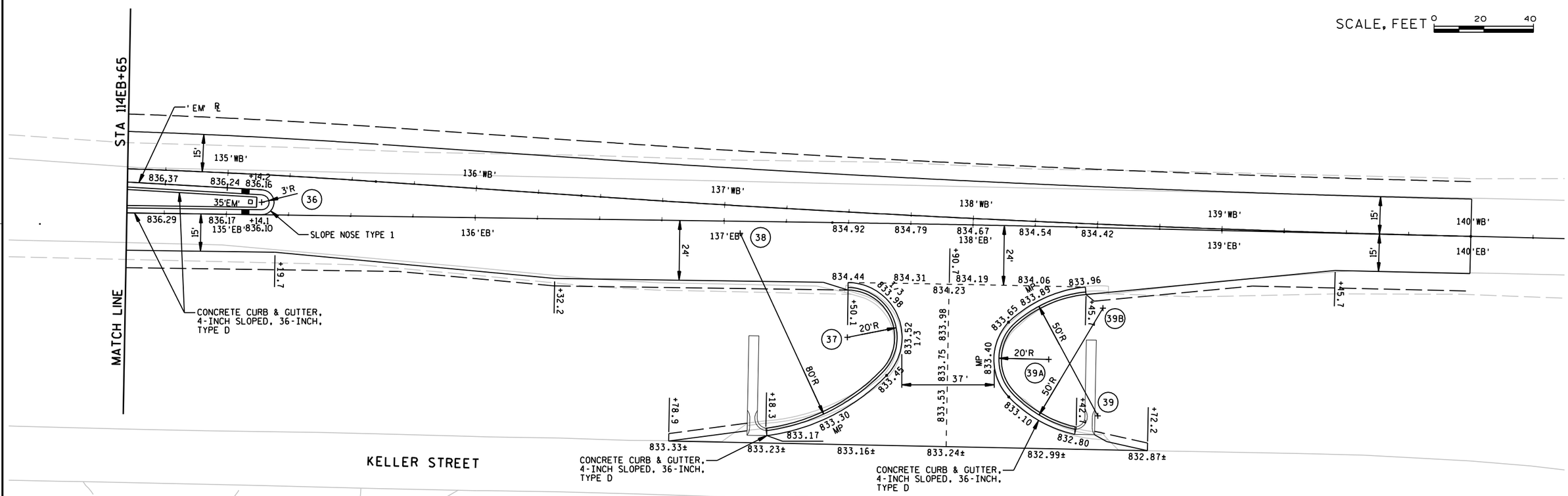

POINT	STATION	OFFSET	DESCRIPTION	NORTHING	EASTING
36	135+14.08	5.00 L	CURB 3' RAD	544411.593	894172.910
37	137+50.13	46.00 R	20' RAD	544357.370	894408.206
38	137+06.45	4.83 R	80' RAD	544399.131	894365.125
39	138+51.86	75.63 R	50' RAD	544325.782	894508.805
39A	138+31.56	53.39 R	20' RAD	544348.486	894489.084
39B	138+52.93	32.29 R	50' RAD	544369.089	894510.890

Alignment Name : USH 10 E EB
Beginning Station : 130+51.51429831
Ending Station : 146+46.65564857

PROJECT NO:1500-32-71	HWY:USH 10	COUNTY:CALUMET	PAVING DETAILS - USH 10 EAST	SHEET 18	E

2

POINT	STATION	OFFSET	DESCRIPTION	NORTHING	EASTING
40	147+49.06	45.00 L	DWY 30' RAD	543387.279	893596.617
41	148+36.66	45.32 L	DWY 30' RAD	543475.277	893597.122
42	150+15.28	30.00 R	DWY 15' RAD	543652.056	893677.038
43	150+67.39	30.00 R	DWY 15' RAD	543704.015	893679.105

Alignment Name : STH 32/57 SOUTH SOUTHBOUND
Beginning Station : 145+28.78
Ending Station : 157+09.53

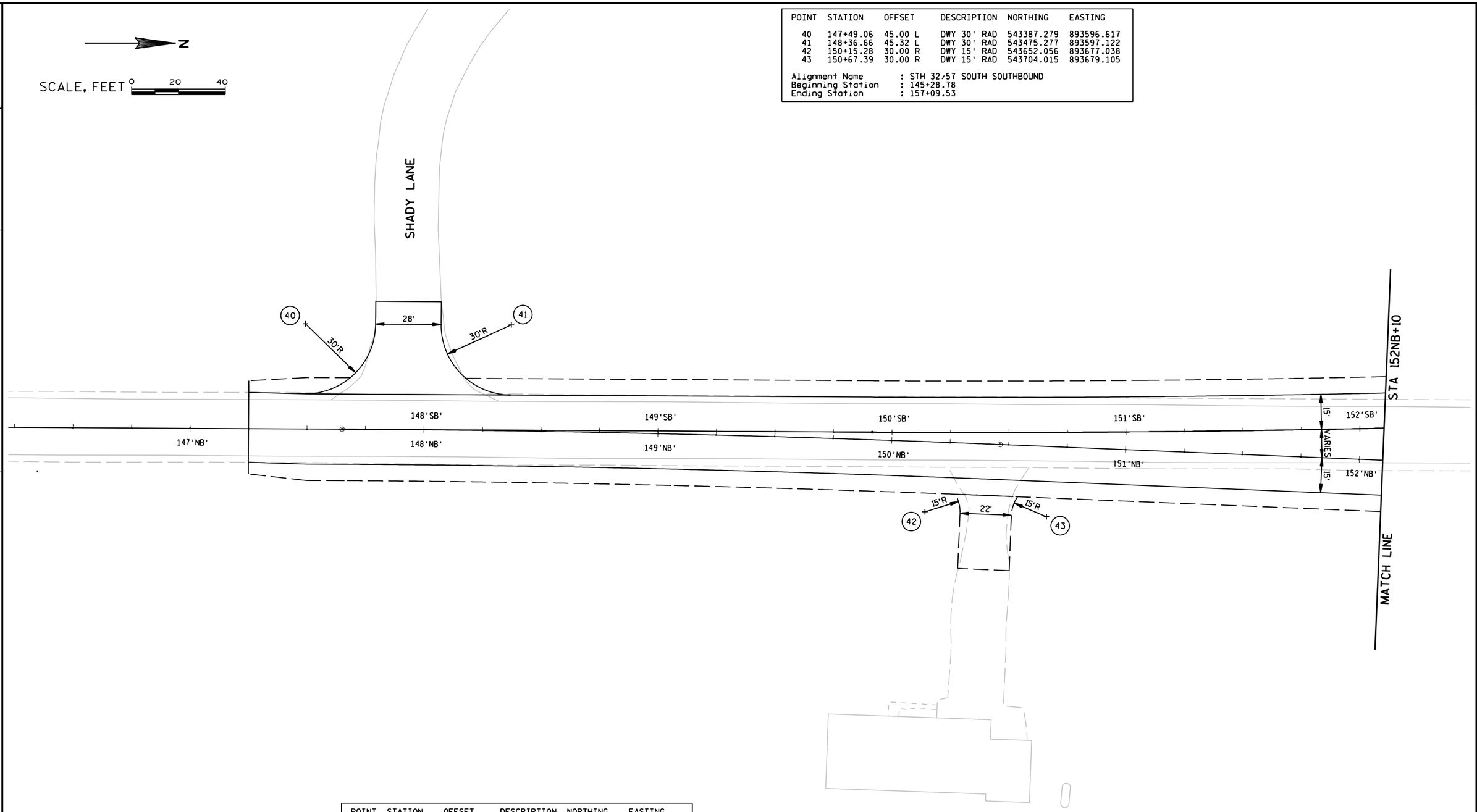

POINT	STATION	OFFSET	DESCRIPTION	NORTHING	EASTING
40	147+49.06	45.00 L	DWY 30' RAD	543387.279	893596.617
41	148+36.66	45.32 L	DWY 30' RAD	543475.277	893597.122
42	150+15.28	30.00 R	DWY 15' RAD	543652.056	893677.038
43	150+67.39	30.00 R	DWY 15' RAD	543704.015	893679.105

Alignment Name : STH 32/57 SOUTH NORTHBOUND
Beginning Station : 145+28.78
Ending Station : 157+09.53

PROJECT NO:1500-32-71	HWY:USH 10	COUNTY:CALUMET	PAVING DETAILS - STH 32/57 SOUTH	SHEET 19	E

2

SCALE, FEET 0 20 40

POINT	STATION	OFFSET	DESCRIPTION	NORTHING	EASTING
44	152+45.37	10.84 L	CURB 3' RAD	543883.417	893645.437
47	153+88.63	45.00 R	DWY 30' RAD	544027.059	893702.337
48	154+01.61	37.79 R	DWY 15' RAD	544040.076	893694.884
49	154+65.68	35.57 R	DWY 15.5'RAD	544104.824	893690.634
50	155+00.98	45.00 R	DWY 30' RAD	544141.009	893698.338
51	155+75.69	43.18 R	DWY 10' RAD	544216.094	893691.701
52	155+94.19	51.83 R	DWY 30' RAD	544235.148	893699.060
53	156+75.78	10.60 L	SIDEWALK	544313.308	893631.561
54	156+76.09	6.59 L	SIDEWALK	544313.534	893635.586
55	156+75.87	2.50 L	SIDEWALK	544313.176	893639.664
56	156+84.49	11.98 L	SIDEWALK	544323.292	893630.991
57	156+85.31	7.31 L	SIDEWALK	544323.559	893635.745
58	156+85.58	2.50 L	SIDEWALK	544323.137	893640.540
59	156+99.36	16.64 L	CURB 3' RAD	544341.318	893630.329
60	157+03.28	4.00 L	CURB 2' RAD	544341.287	893643.718

Alignment Name : STH 32/57 SOUTH SOUTHBOUND
Beginning Station : 145+28.78
Ending Station : 157+09.53

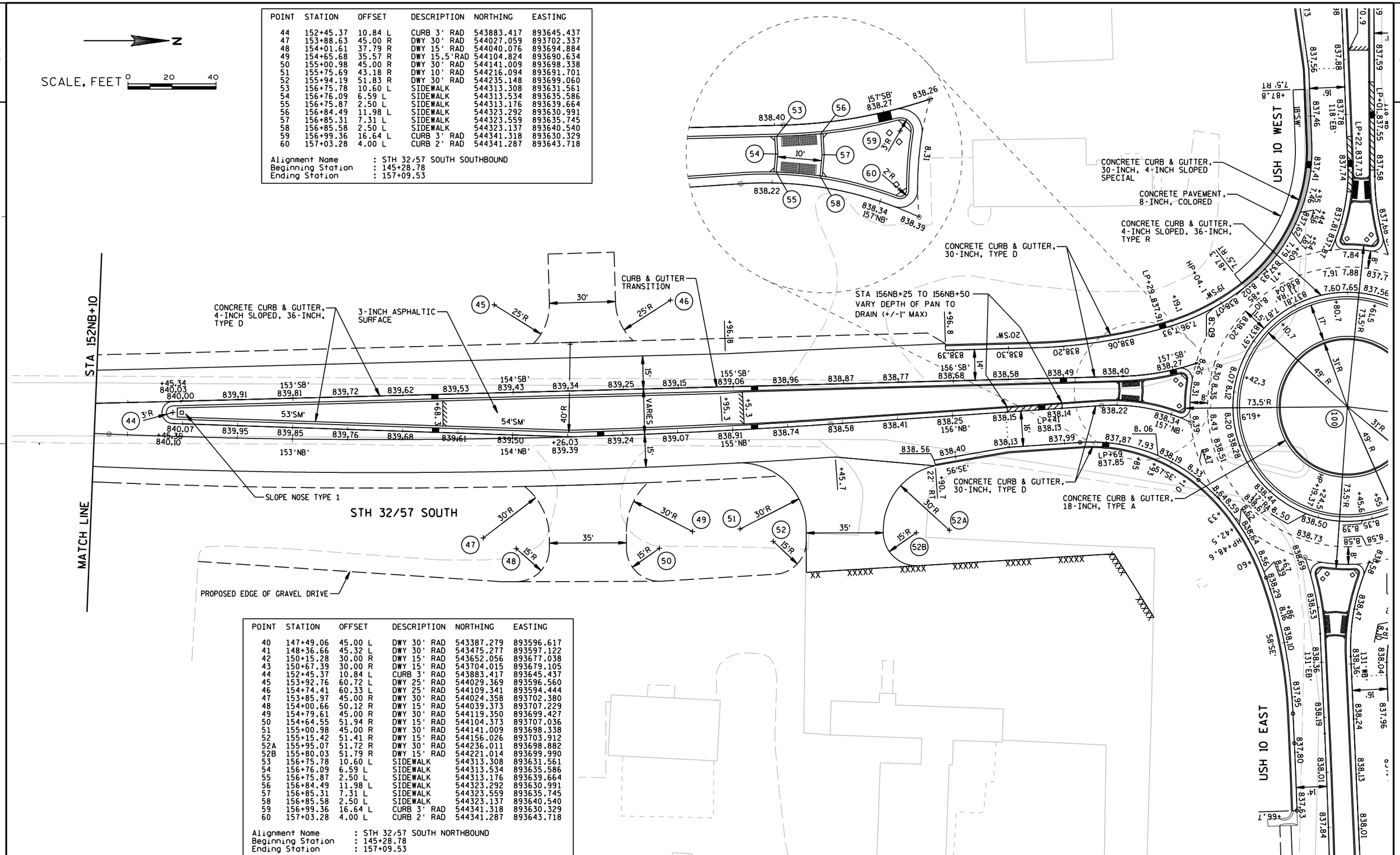

POINT	STATION	OFFSET	DESCRIPTION	NORTHING	EASTING
40	147+49.06	45.00 L	DWY 30' RAD	543387.279	893596.617
41	148+36.66	45.32 L	DWY 30' RAD	543475.277	893597.122
42	150+15.28	30.00 R	DWY 15' RAD	543652.056	893677.038
43	150+67.39	30.00 R	DWY 15' RAD	543704.015	893679.105
44	152+45.37	10.84 L	CURB 3' RAD	543883.417	893645.437
45	153+92.76	60.72 L	DWY 25' RAD	544029.369	893596.560
46	154+74.41	60.33 L	DWY 25' RAD	544109.341	893594.444
47	153+85.97	45.00 R	DWY 30' RAD	544024.358	893702.380
48	154+00.66	50.12 R	DWY 15' RAD	544039.373	893707.229
49	154+79.61	45.00 R	DWY 30' RAD	544119.350	893699.427
50	154+64.55	51.94 R	DWY 15' RAD	544104.373	893707.036
51	155+00.98	45.00 R	DWY 30' RAD	544141.009	893698.338
52	155+15.42	51.41 R	DWY 15' RAD	544156.026	893703.912
52A	155+95.07	51.72 R	DWY 30' RAD	544236.011	893698.882
52B	155+80.03	51.79 R	DWY 15' RAD	544221.014	893699.990
53	156+75.78	10.60 L	SIDEWALK	544313.308	893631.561
54	156+76.09	6.59 L	SIDEWALK	544313.534	893635.586
55	156+75.87	2.50 L	SIDEWALK	544313.176	893639.664
56	156+84.49	11.98 L	SIDEWALK	544323.292	893630.991
57	156+85.31	7.31 L	SIDEWALK	544323.559	893635.745
58	156+85.58	2.50 L	SIDEWALK	544323.137	893640.540
59	156+99.36	16.64 L	CURB 3' RAD	544341.318	893630.329
60	157+03.28	4.00 L	CURB 2' RAD	544341.287	893643.718

Alignment Name : STH 32/57 SOUTH NORTHBOUND
Beginning Station : 145+28.78
Ending Station : 157+09.53

2

PROJECT NO:1500-32-71	HWY:USH 10	COUNTY:CALUMET	PAVING DETAILS - STH 32/57 SOUTH	SHEET 20	E

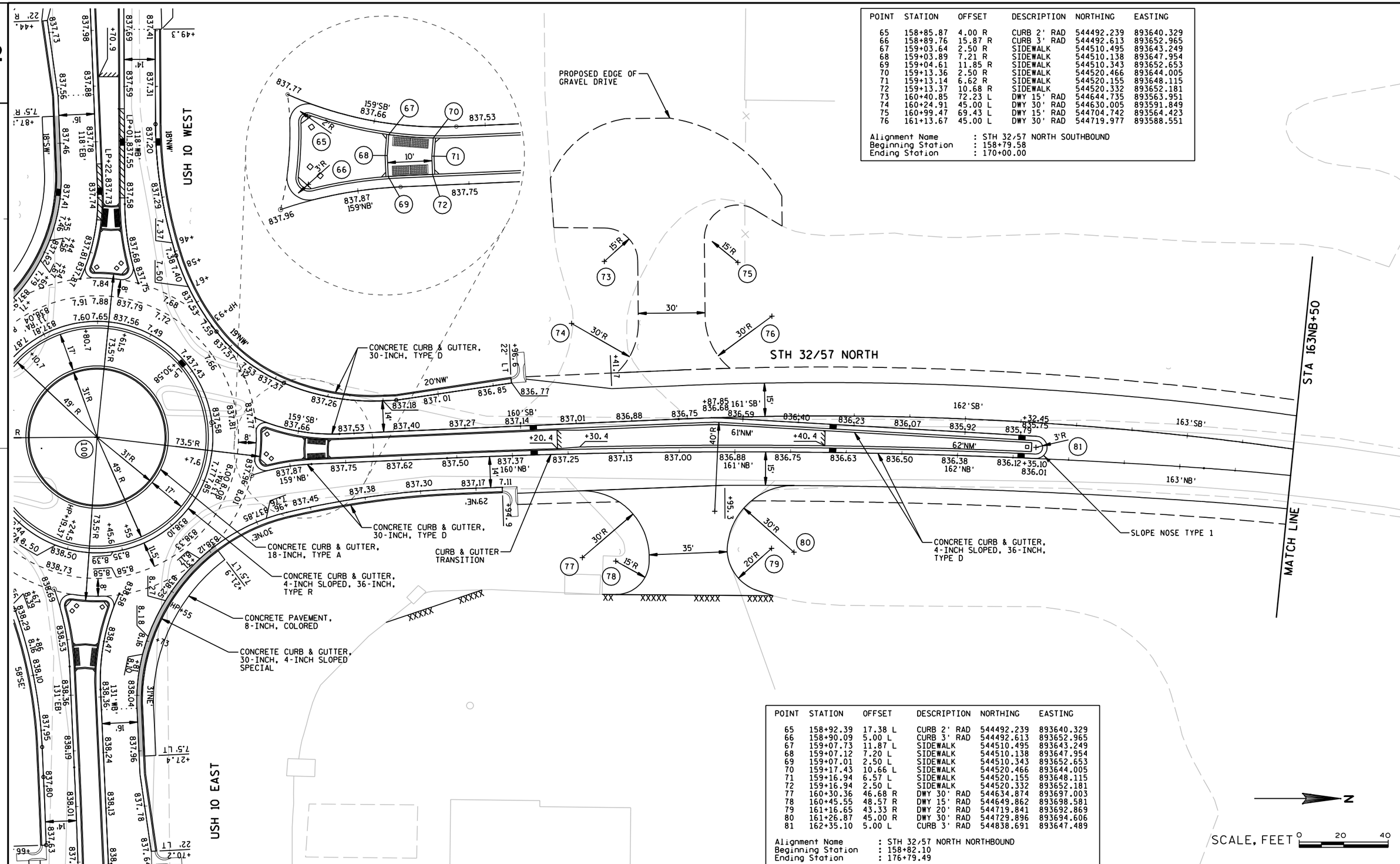

POINT	STATION	OFFSET	DESCRIPTION	NORTHING	EASTING
65	158+85.87	4.00 R	CURB 2' RAD	544492.239	893640.329
66	158+89.76	15.87 R	CURB 3' RAD	544492.613	893652.965
67	159+03.64	2.50 R	SIDEWALK	544510.495	893643.249
68	159+03.89	7.21 R	SIDEWALK	544510.138	893647.954
69	159+04.61	11.85 R	SIDEWALK	544510.343	893652.653
70	159+13.36	2.50 R	SIDEWALK	544520.466	893644.005
71	159+13.14	6.62 R	SIDEWALK	544520.155	893648.115
72	159+13.37	10.68 R	SIDEWALK	544520.332	893652.181
73	160+40.85	72.23 L	DWY 15' RAD	544644.735	893563.951
74	160+24.91	45.00 L	DWY 30' RAD	544630.005	893591.849
75	160+99.47	69.43 L	DWY 15' RAD	544704.742	893564.423
76	161+13.67	45.00 L	DWY 30' RAD	544719.977	893588.551

Alignment Name : STH 32/57 NORTH SOUTHBOUND
Beginning Station : 158+79.58
Ending Station : 170+00.00

POINT	STATION	OFFSET	DESCRIPTION	NORTHING	EASTING
65	158+92.39	17.38 L	CURB 2' RAD	544492.239	893640.329
66	158+90.09	5.00 L	CURB 3' RAD	544492.613	893652.965
67	159+07.73	11.87 L	SIDEWALK	544510.495	893643.249
68	159+07.12	7.20 L	SIDEWALK	544510.138	893647.954
69	159+07.01	2.50 L	SIDEWALK	544510.343	893652.653
70	159+17.43	10.66 L	SIDEWALK	544520.466	893644.005
71	159+16.94	6.57 L	SIDEWALK	544520.155	893648.115
72	159+16.94	2.50 L	SIDEWALK	544520.332	893652.181
77	160+30.36	46.68 R	DWY 30' RAD	544634.874	893697.003
78	160+45.55	48.57 R	DWY 15' RAD	544649.862	893698.581
79	161+16.65	43.33 R	DWY 20' RAD	544719.841	893692.869
80	161+26.87	45.00 R	DWY 30' RAD	544729.896	893694.606
81	162+35.10	5.00 L	CURB 3' RAD	544838.691	893647.489

Alignment Name : STH 32/57 NORTH NORTHBOUND
Beginning Station : 158+82.10
Ending Station : 176+79.49

PROJECT NO:1500-32-71	HWY:USH 10	COUNTY:CALUMET	PAVING DETAILS - STH 32/57 NORTH	SHEET 21	E

POINT	STATION	OFFSET	DESCRIPTION	NORTHING	EASTING
82	166+99.08	72.00 L	CURB 48' RAD	545319.466	893672.185
86	168+60.18	43.87 L	119.8' RAD	545459.148	893768.720
87	168+80.87	41.68 L	109.8' RAD	545476.769	893780.874

Alignment Name : STH 32/57 NORTH SOUTHBOUND
Beginning Station : 158+79.58
Ending Station : 170+00.00

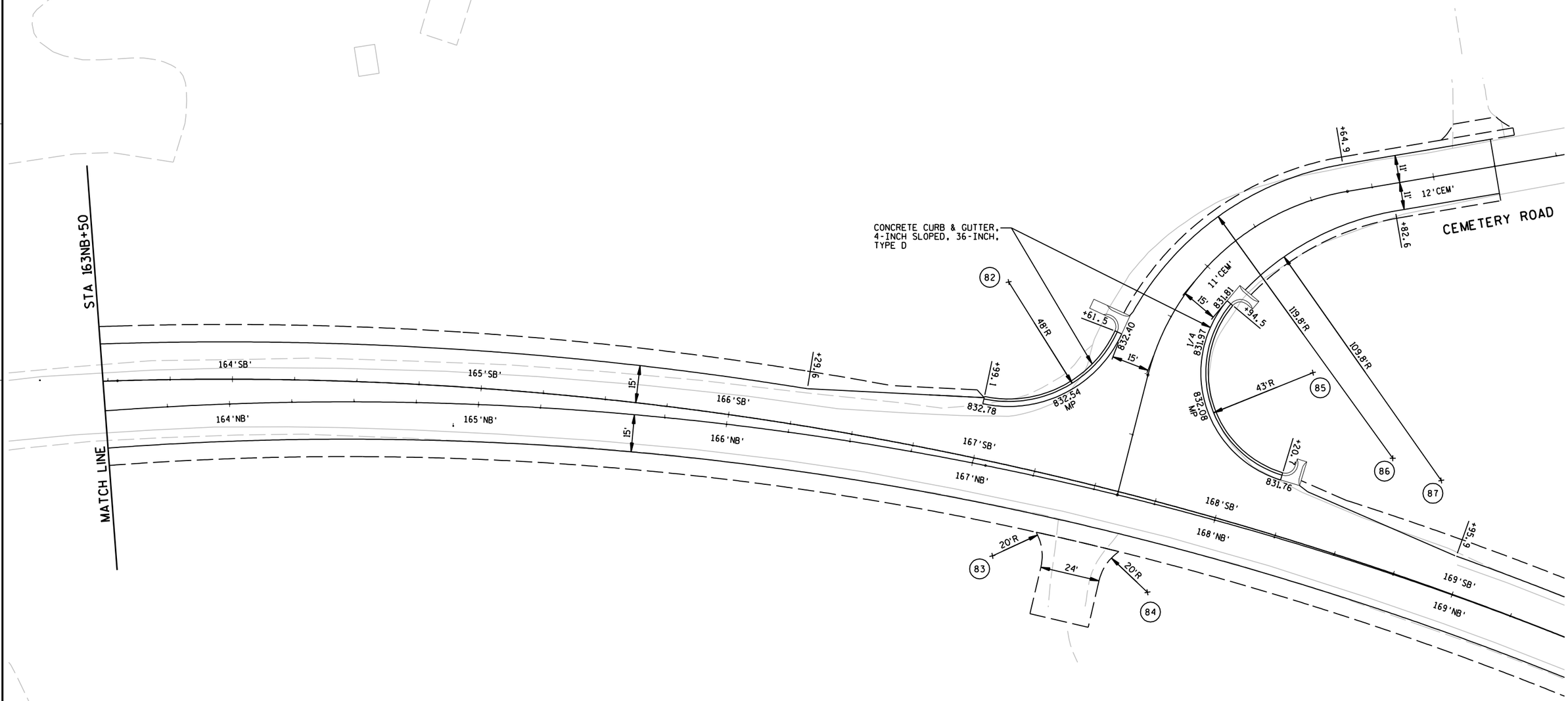

POINT	STATION	OFFSET	DESCRIPTION	NORTHING	EASTING
83	167+15.53	35.00 R	DWY 20' RAD	545293.928	893779.425
84	167+81.23	35.00 R	DWY 20' RAD	545352.749	893804.645

Alignment Name : STH 32/57 NORTH NORTHBOUND
Beginning Station : 158+82.10
Ending Station : 176+79.49

PROJECT NO:1500-32-71	HWY:USH 10	COUNTY:CALUMET	PAVING DETAILS - STH 32/57 NORTH	SHEET 22	E

2

LEGEND

- SILT FENCE
- TEMPORARY DITCH CHECK WITH ROCK BAG RELIEF
- RIP RAP OR STONE DITCH CHECK
- SLOPE INTERCEPT
- INLET PROTECTION
- ROCK BAG DITCH CHECK
- CULVERT PIPE CHECK
- SURFACE WATER FLOW

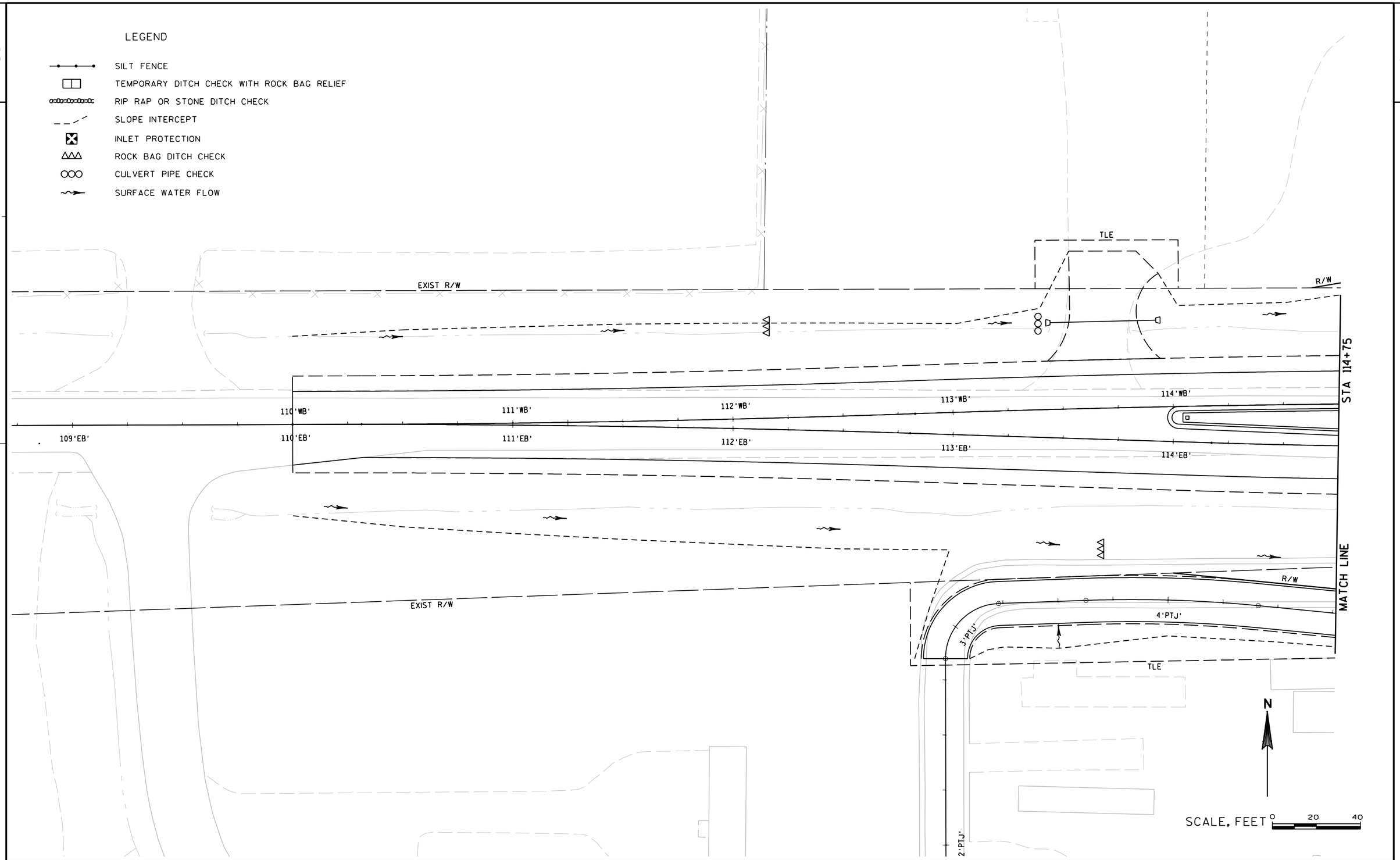

2

PROJECT NO:1500-32-71	HWY:USH 10	COUNTY:CALUMET	EROSION CONTROL TEMPORARY - USH 10 WEST	SHEET 23	E

2

LEGEND

- SILT FENCE
- TEMPORARY DITCH CHECK WITH ROCK BAG RELIEF
- RIP RAP OR STONE DITCH CHECK
- SLOPE INTERCEPT
- INLET PROTECTION
- ROCK BAG DITCH CHECK
- CULVERT PIPE CHECK
- SURFACE WATER FLOW

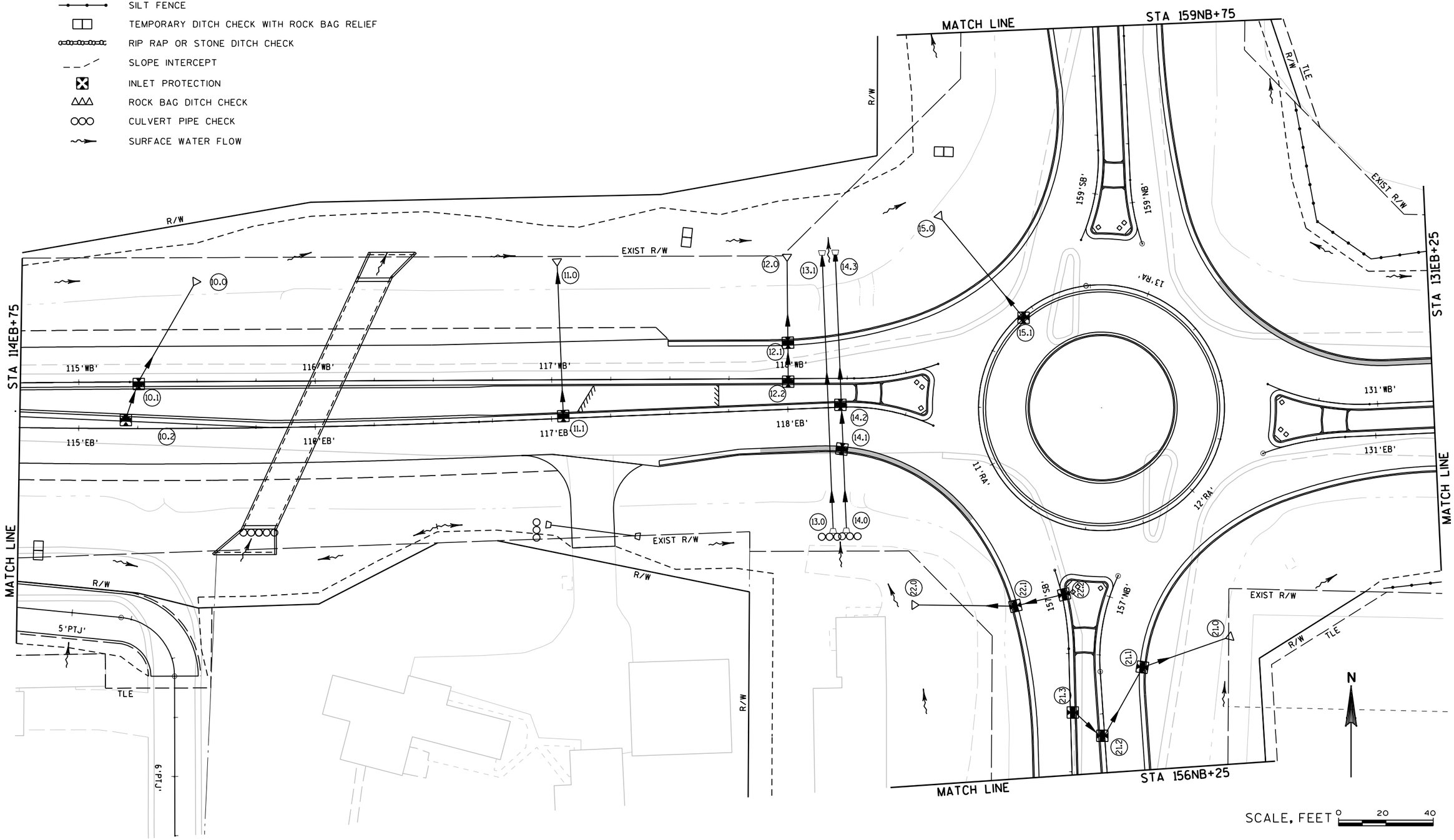

PROJECT NO:1500-32-71	HWY:USH 10	COUNTY:CALUMET	EROSION CONTROL TEMPORARY - USH 10	SHEET 24	E

2

LEGEND

- SILT FENCE
- TEMPORARY DITCH CHECK WITH ROCK BAG RELIEF
- RIP RAP OR STONE DITCH CHECK
- SLOPE INTERCEPT
- INLET PROTECTION
- ROCK BAG DITCH CHECK
- CULVERT PIPE CHECK
- SURFACE WATER FLOW

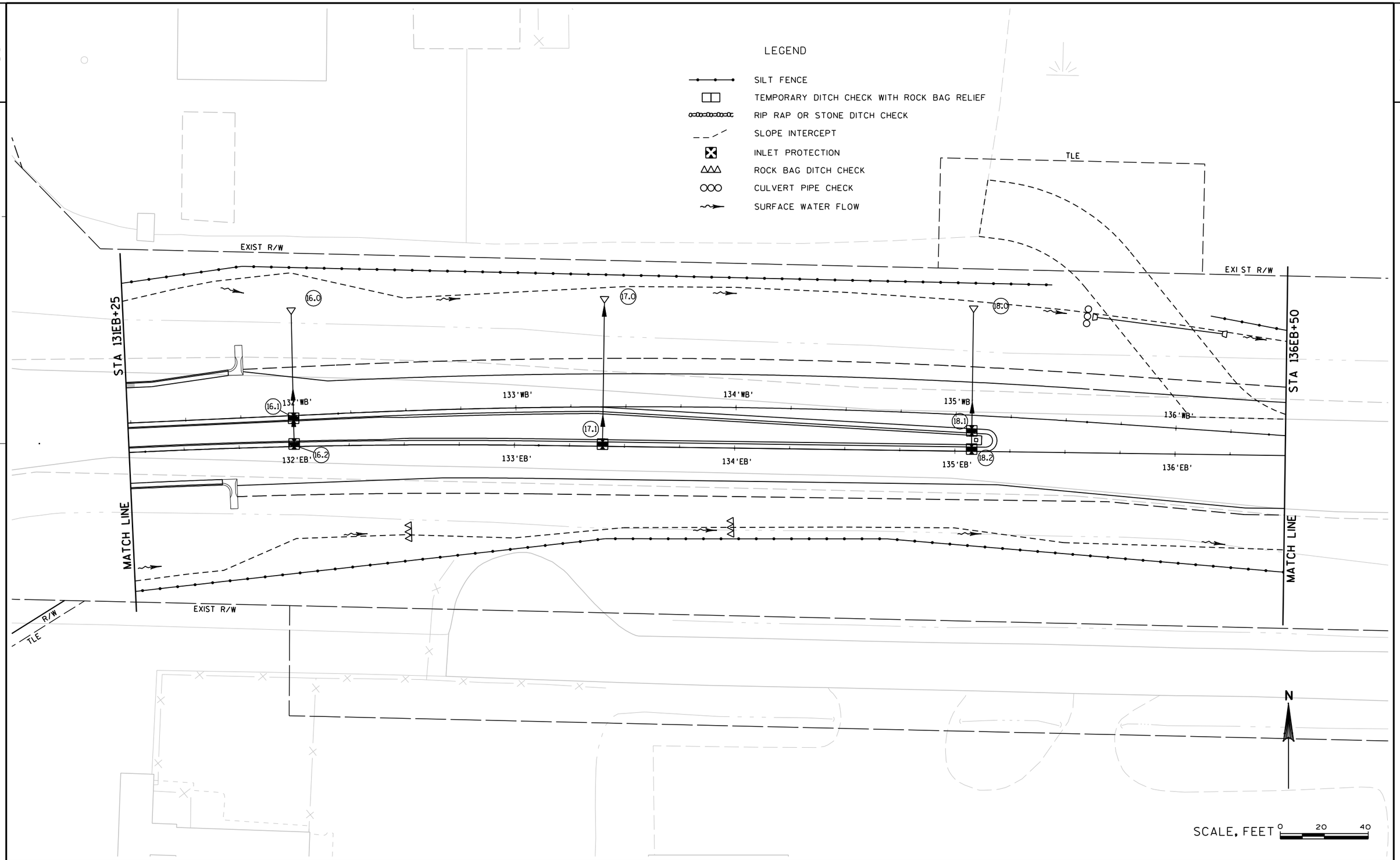

PROJECT NO:1500-32-71	HWY:USH 10	COUNTY:CALUMET	EROSION CONTROL TEMPORARY - USH 10 EAST	SHEET 25	E

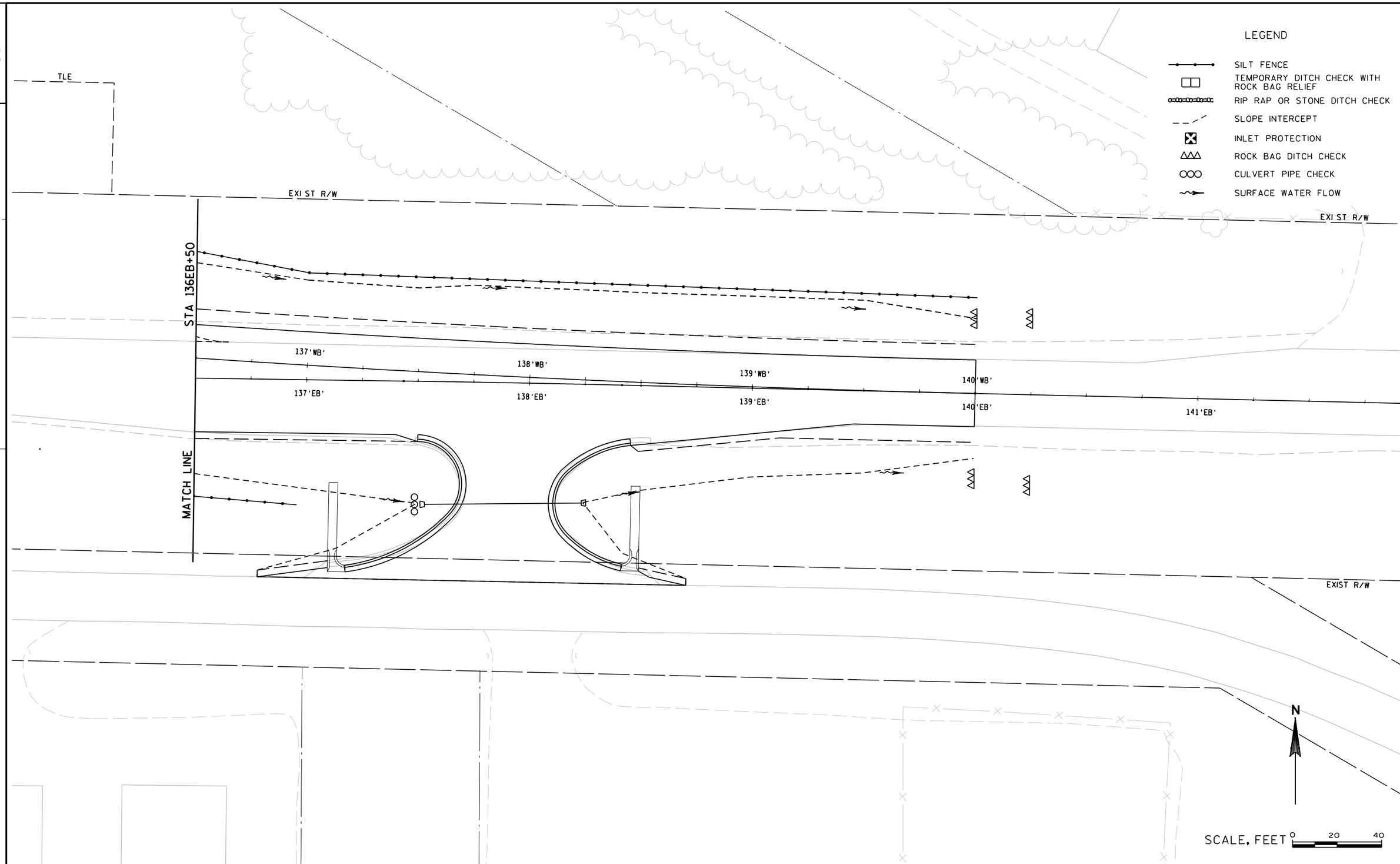

PROJECT NO:1500-32-71	HWY:USH 10	COUNTY:CALUMET	EROSION CONTROL TEMPORARY - USH 10 EAST	SHEET 26	E

2

2

LEGEND

- SILT FENCE
- TEMPORARY DITCH CHECK WITH ROCK BAG RELIEF
- RIP RAP OR STONE DITCH CHECK
- SLOPE INTERCEPT
- INLET PROTECTION
- ROCK BAG DITCH CHECK
- CULVERT PIPE CHECK
- SURFACE WATER FLOW

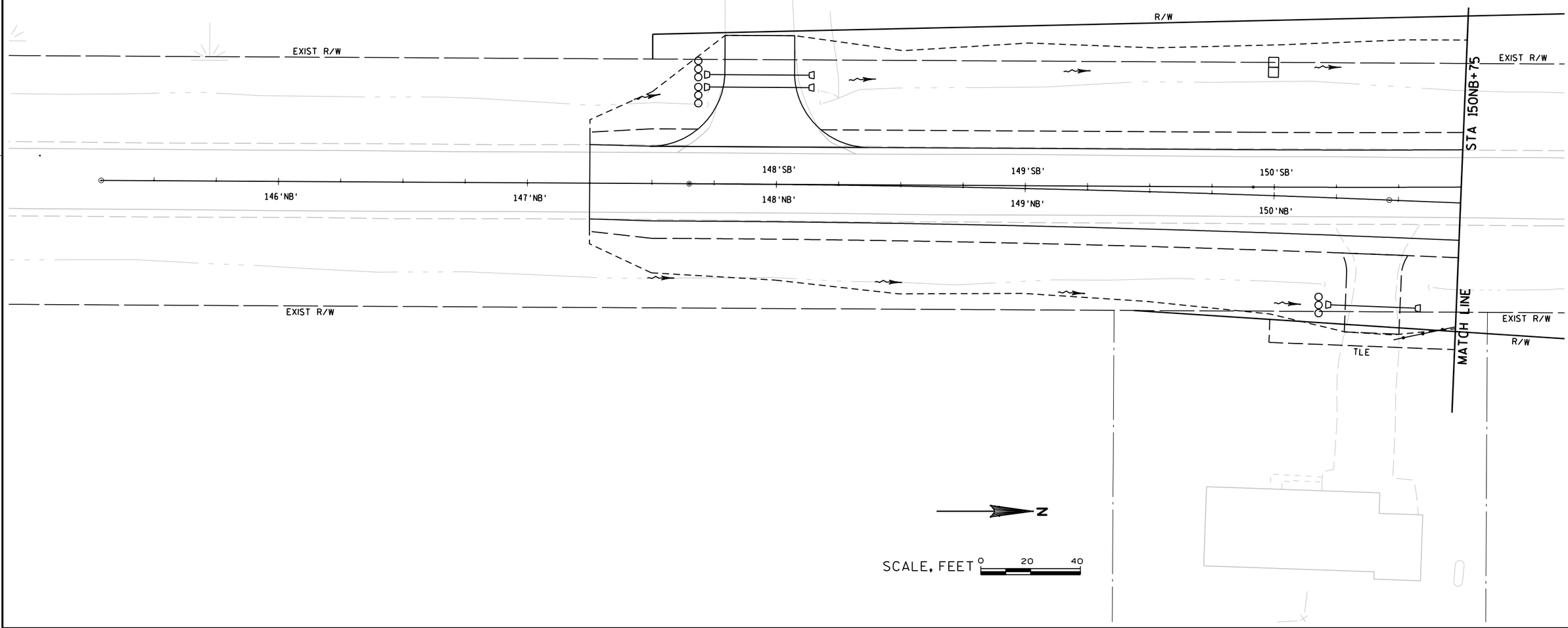

PROJECT NO:1500-32-71	HWY:USH 10	COUNTY:CALUMET	EROSION CONTROL TEMPORARY - STH 32/57 SOUTH	SHEET 27	E

2

LEGEND

- SILT FENCE
- TEMPORARY DITCH CHECK WITH ROCK BAG RELIEF
- RIP RAP OR STONE DITCH CHECK
- SLOPE INTERCEPT
- INLET PROTECTION
- ROCK BAG DITCH CHECK
- CULVERT PIPE CHECK
- SURFACE WATER FLOW

R/W

EXIST R/W

STA 150NB+75

STA 156NB+25

MATCH LINE

19.0

19.1

19.2

20.0

20.1

20.2

20.3

151'SB'

152'SB'

153'SB'

154'SB'

155'SB'

156'SB'

151'NB'

152'NB'

153'NB'

154'NB'

155'NB'

156'NB'

Driveway opening

TLE

PROJECT NO:1500-32-71	HWY:USH 10	COUNTY:CALUMET	EROSION CONTROL TEMPORARY - STH 32/57 SOUTH	SHEET 28	E

FILE NAME : F:\TR\JOBS\E1865A08\Sheets\Plan\15003271_022006_ect.dgn PLOT DATE : 7/31/2012 2:25:20 PM PLOT BY : OMNNI- knuthc PLOT NAME : PLOT SCALE : 40.0000 ' / IN.

WISDOT/CADDS SHEET 42

2

LEGEND

- SILT FENCE
- TEMPORARY DITCH CHECK WITH ROCK BAG RELIEF
- RIP RAP OR STONE DITCH CHECK
- SLOPE INTERCEPT
- INLET PROTECTION
- ROCK BAG DITCH CHECK
- CULVERT PIPE CHECK
- SURFACE WATER FLOW

TLE

R/W

EXIST R/W

STA 159NB+75

23.0

24.0

25.0

160'SB'

23.1

161'SB'

24.1

162'SB'

25.1

163'SB'

164'SB'

Driveway opening

160'NB'

23.2

161'NB'

24.2

162'NB'

25.2

163'NB'

164'NB'

165'SB'

165'NB'

STA 165NB+25

MATCH LINE

EXIST R/W

TLE

TLE

MATCH LINE

EXIST R/W

N

SCALE, FEET 0 20 40

PROJECT NO:1500-32-71	HWY:USH 10	COUNTY:CALUMET	EROSION CONTROL TEMPORARY - STH 32/57 NORTH	SHEET 29	E

FILE NAME : F:\TR\JOBS\E1865A08\Sheets\Plan\15003271_022007_ect.dgn PLOT DATE : 7/31/2012 2:26:23 PM PLOT BY : OMNNI- knuthc PLOT NAME : PLOT SCALE : 40.0000 ' / IN.

WISDOT/CADDS SHEET 42

2

R/W

STA 165NB+25

MATCH LINE

EXIST R/W

R/W

166'SB'

166'NB'

167'SB'

167'NB'

168'SB'

168'NB'

169'SB'

169'NB'

170'SB'

170'NB'

171'NB'

11'CEM'

12'CEM'

13'CEM'

R/W

EXIST R/W

EXIST R/W

EXIST R/W

EXIST R/W

LEGEND

- SILT FENCE
- TEMPORARY DITCH CHECK WITH ROCK BAG RELIEF
- RIP RAP OR STONE DITCH CHECK
- SLOPE INTERCEPT
- INLET PROTECTION
- ROCK BAG DITCH CHECK
- CULVERT PIPE CHECK
- SURFACE WATER FLOW

N

SCALE, FEET 0 20 40

2

PROJECT NO:1500-32-71	HWY:USH 10	COUNTY:CALUMET	EROSION CONTROL TEMPORARY - STH 32/57 NORTH	SHEET 30	E

2

LEGEND

- EROSION MAT CLASS I, TYPE B
- EROSION MAT URBAN CLASS I, TYPE A
- EROSION MAT URBAN CLASS I, TYPE B
- RIP RAP OR STONE DITCH CHECK
- SLOPE INTERCEPT
- ASPHALTIC FLUME
- SURFACE WATER FLOW

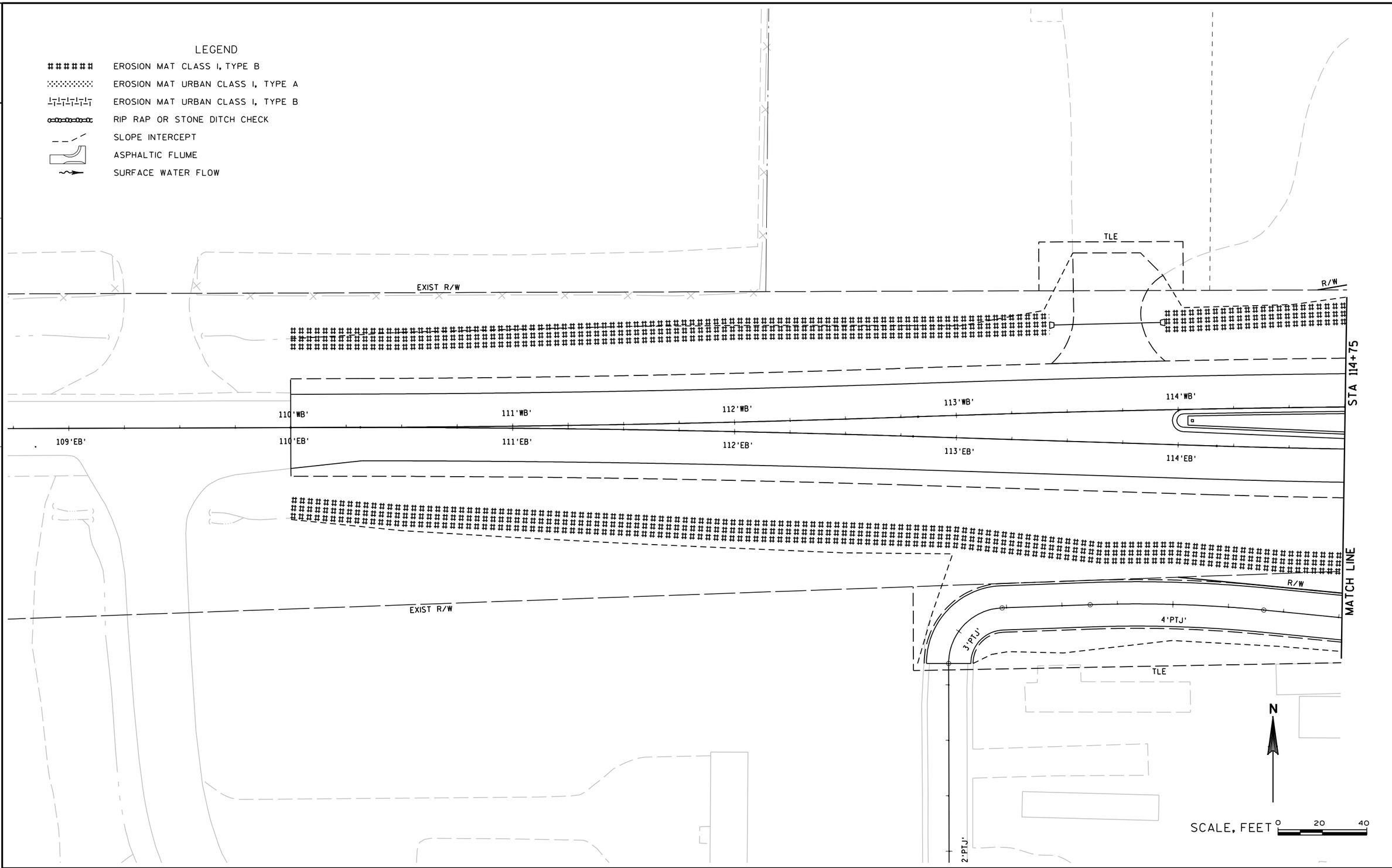

2

PROJECT NO:1500-32-71	HWY:USH 10	COUNTY:CALUMET	EROSION CONTROL PERMANENT - USH 10 WEST	SHEET 31	E

LEGEND

- EROSION MAT CLASS I, TYPE B
- EROSION MAT URBAN CLASS I, TYPE A
- EROSION MAT URBAN CLASS I, TYPE B
- RIP RAP OR STONE DITCH CHECK
- SLOPE INTERCEPT
- ASPHALTIC FLUME
- SURFACE WATER FLOW

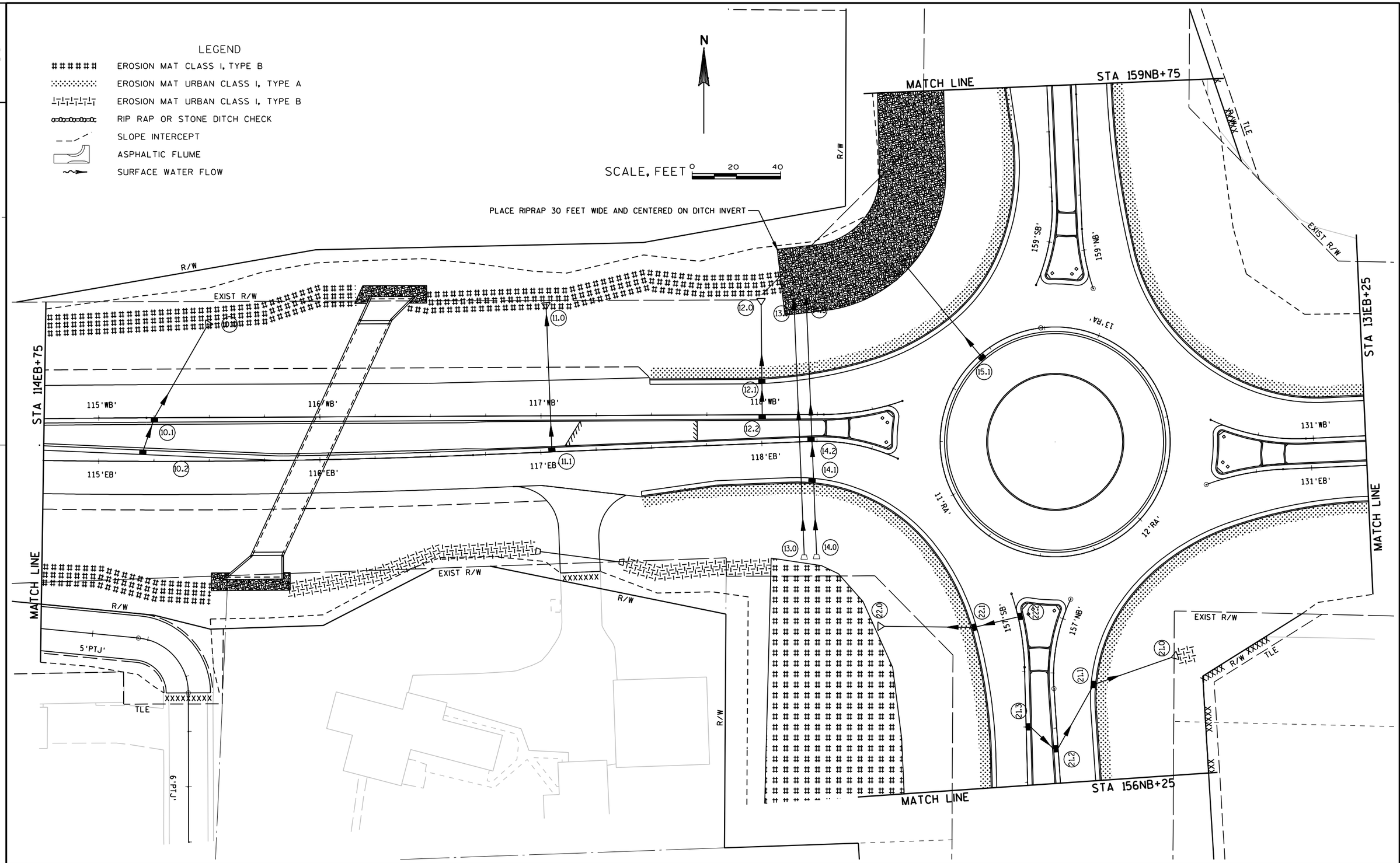

PROJECT NO:1500-32-71	HWY:USH 10	COUNTY:CALUMET	EROSION CONTROL PERMANENT - USH 10	SHEET 32	E

2

LEGEND

- EROSION MAT CLASS I, TYPE B
- EROSION MAT URBAN CLASS I, TYPE A
- EROSION MAT URBAN CLASS I, TYPE B
- RIP RAP OR STONE DITCH CHECK
- SLOPE INTERCEPT
- ASPHALTIC FLUME
- SURFACE WATER FLOW

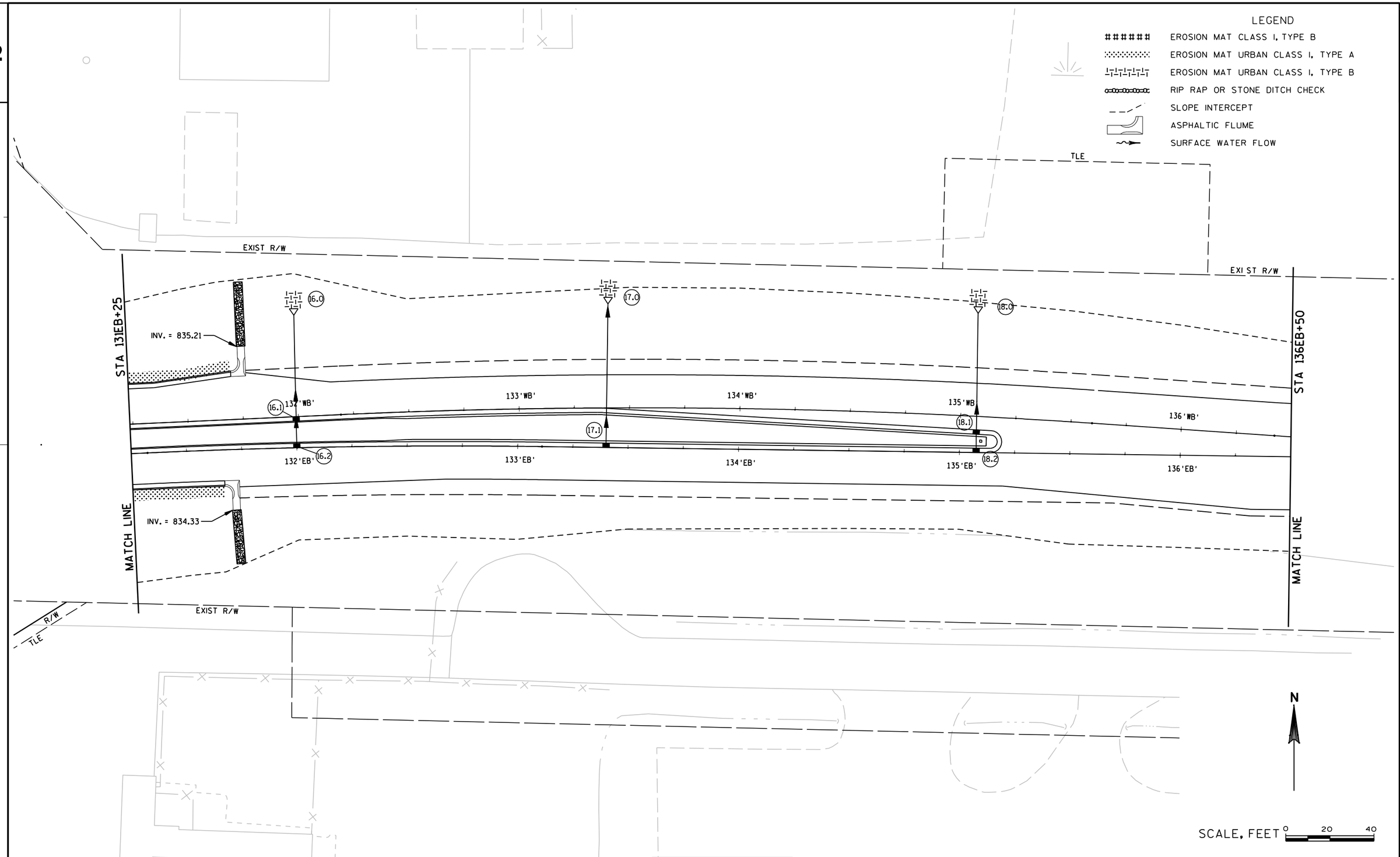

2

PROJECT NO:1500-32-71	HWY:USH 10	COUNTY:CALUMET	EROSION CONTROL PERMANENT - USH 10 EAST	SHEET 33	E

2

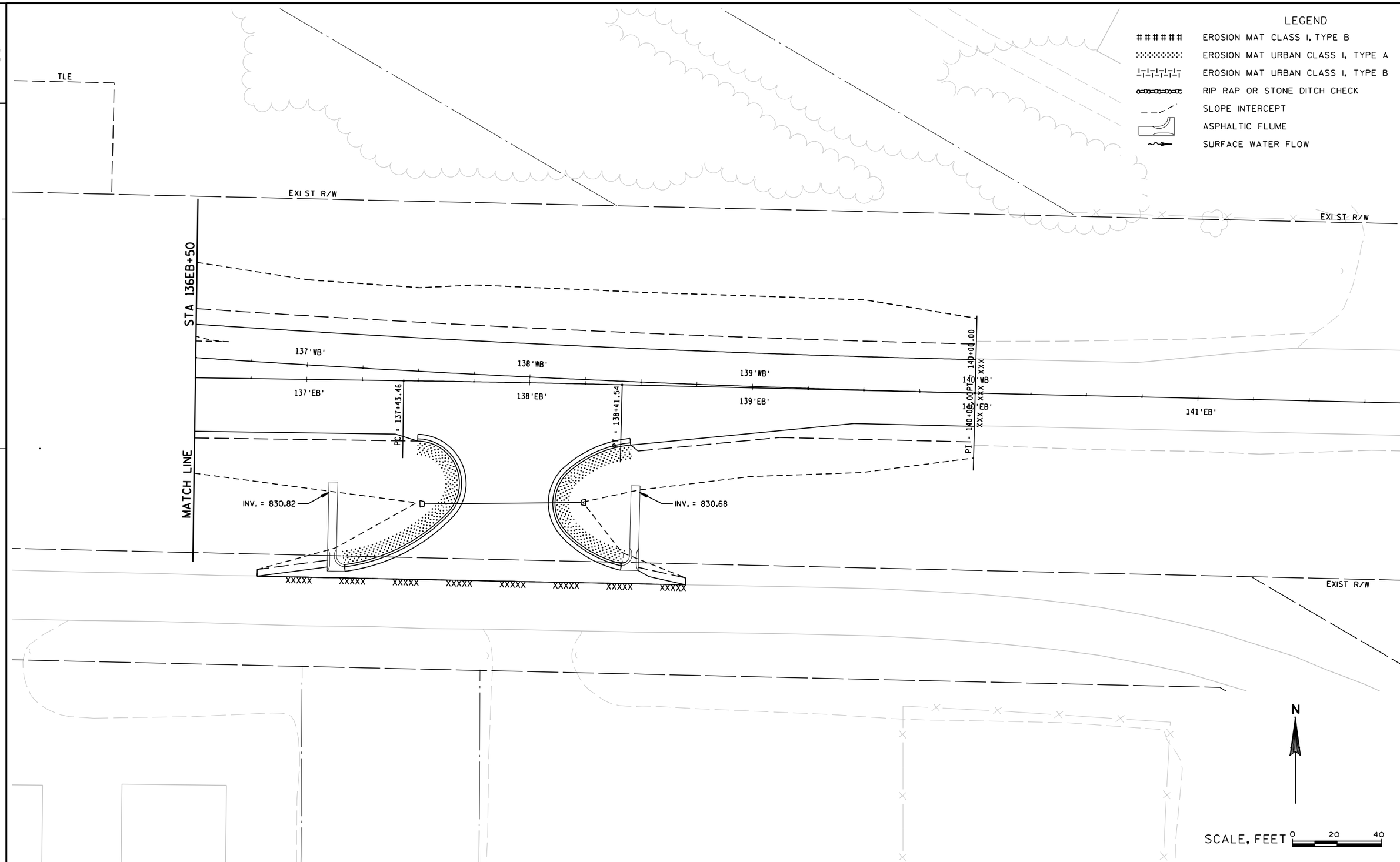

2

PROJECT NO:1500-32-71	HWY:USH 10	COUNTY:CALUMET	EROSION CONTROL PERMANENT - USH 10 EAST	SHEET 34	E

2

LEGEND

- EROSION MAT CLASS I, TYPE B
- EROSION MAT URBAN CLASS I, TYPE A
- EROSION MAT URBAN CLASS I, TYPE B
- RIP RAP OR STONE DITCH CHECK
- SLOPE INTERCEPT
- ASPHALTIC FLUME
- SURFACE WATER FLOW

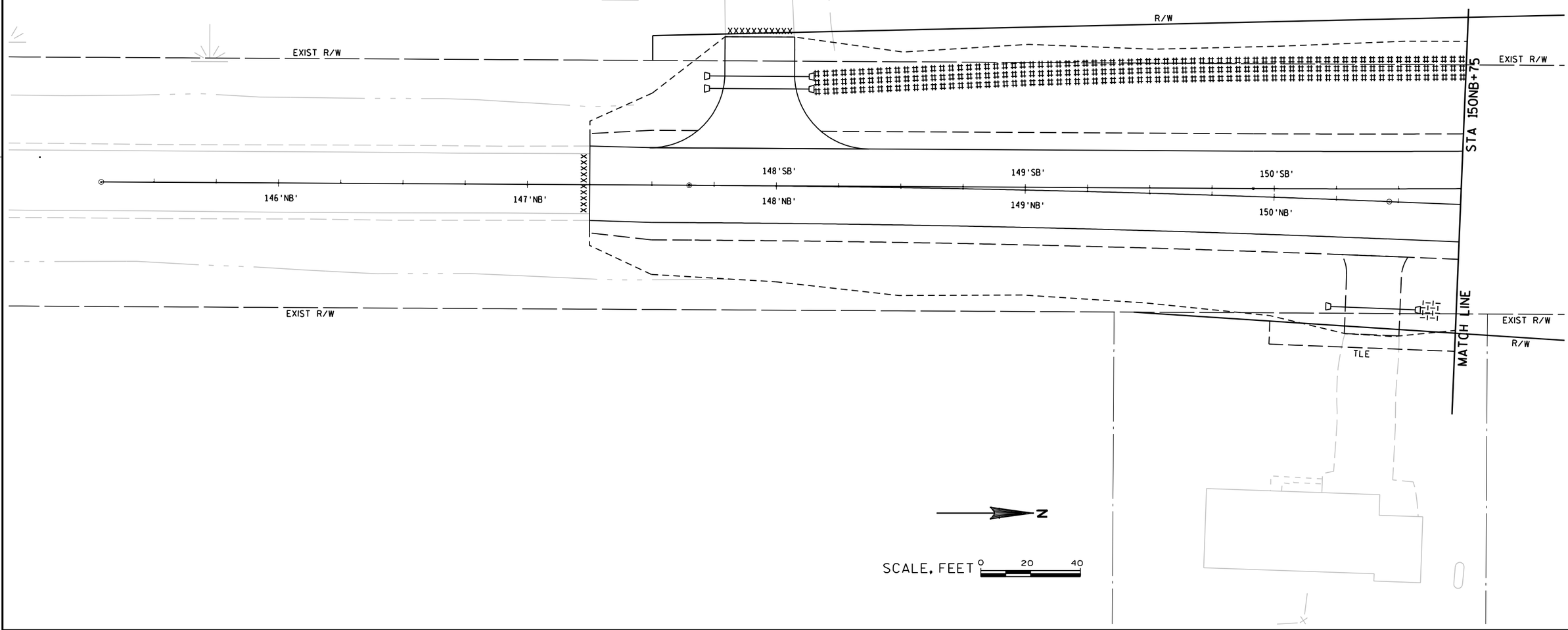

2

PROJECT NO:1500-32-71	HWY:USH 10	COUNTY:CALUMET	EROSION CONTROL PERMANENT - STH 32/57 SOUTH	SHEET 35	E

2

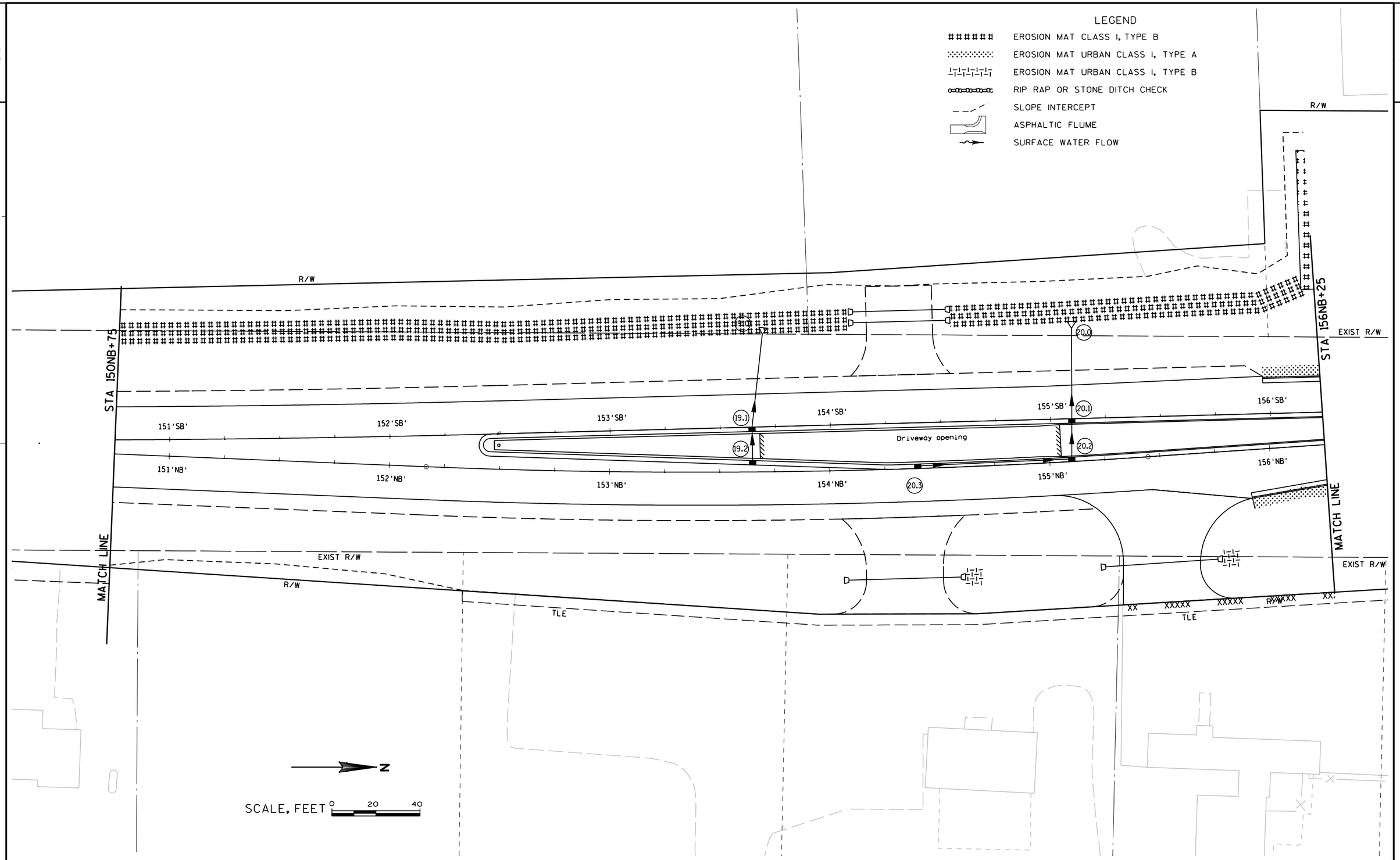

2

PROJECT NO:1500-32-71	HWY:USH 10	COUNTY:CALUMET	EROSION CONTROL PERMANENT - STH 32/57 SOUTH	SHEET 36	E

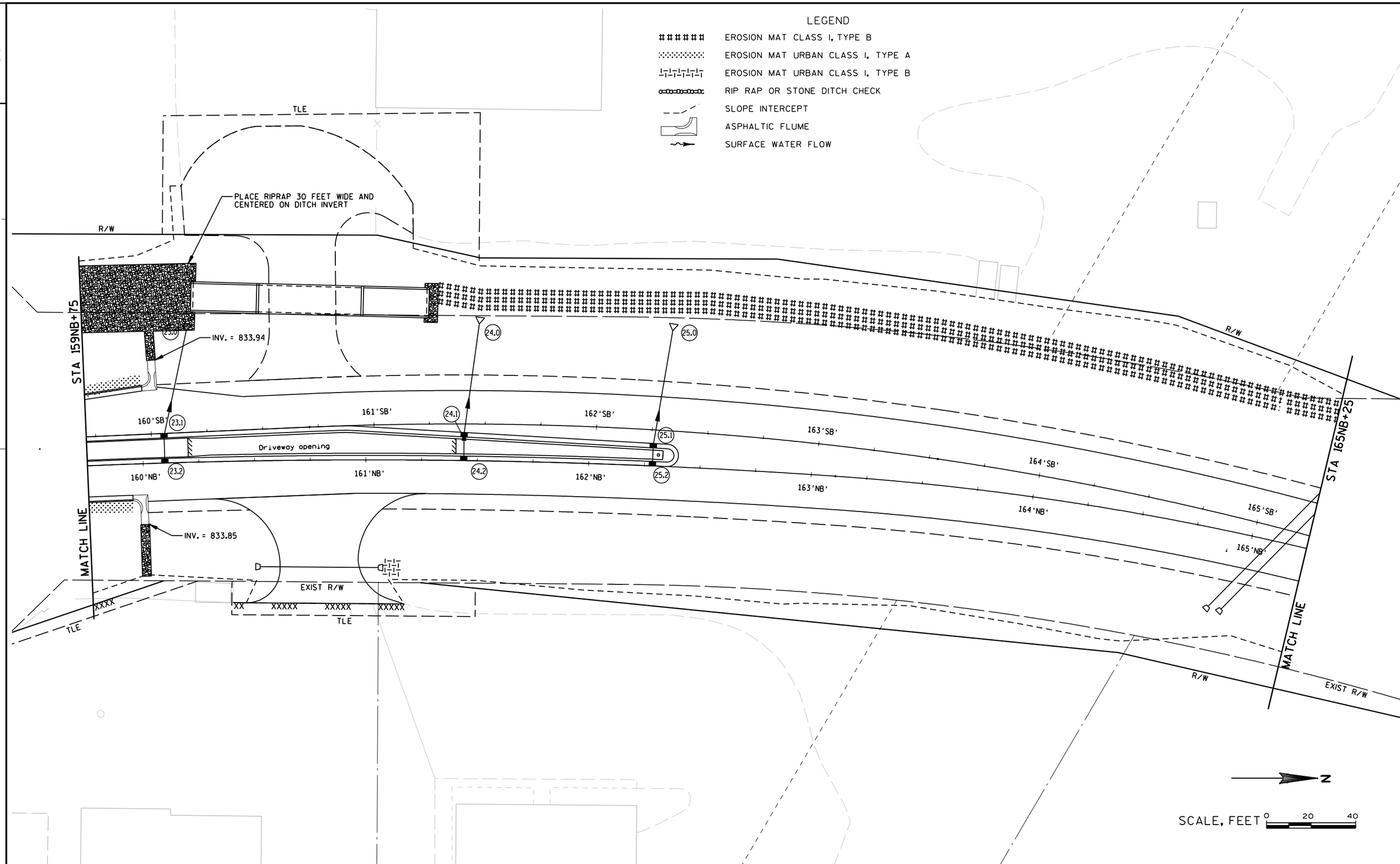

PROJECT NO:1500-32-71	HWY:USH 10	COUNTY:CALUMET	EROSION CONTROL PERMANENT - STH 32/57 NORTH	SHEET 37	E

2

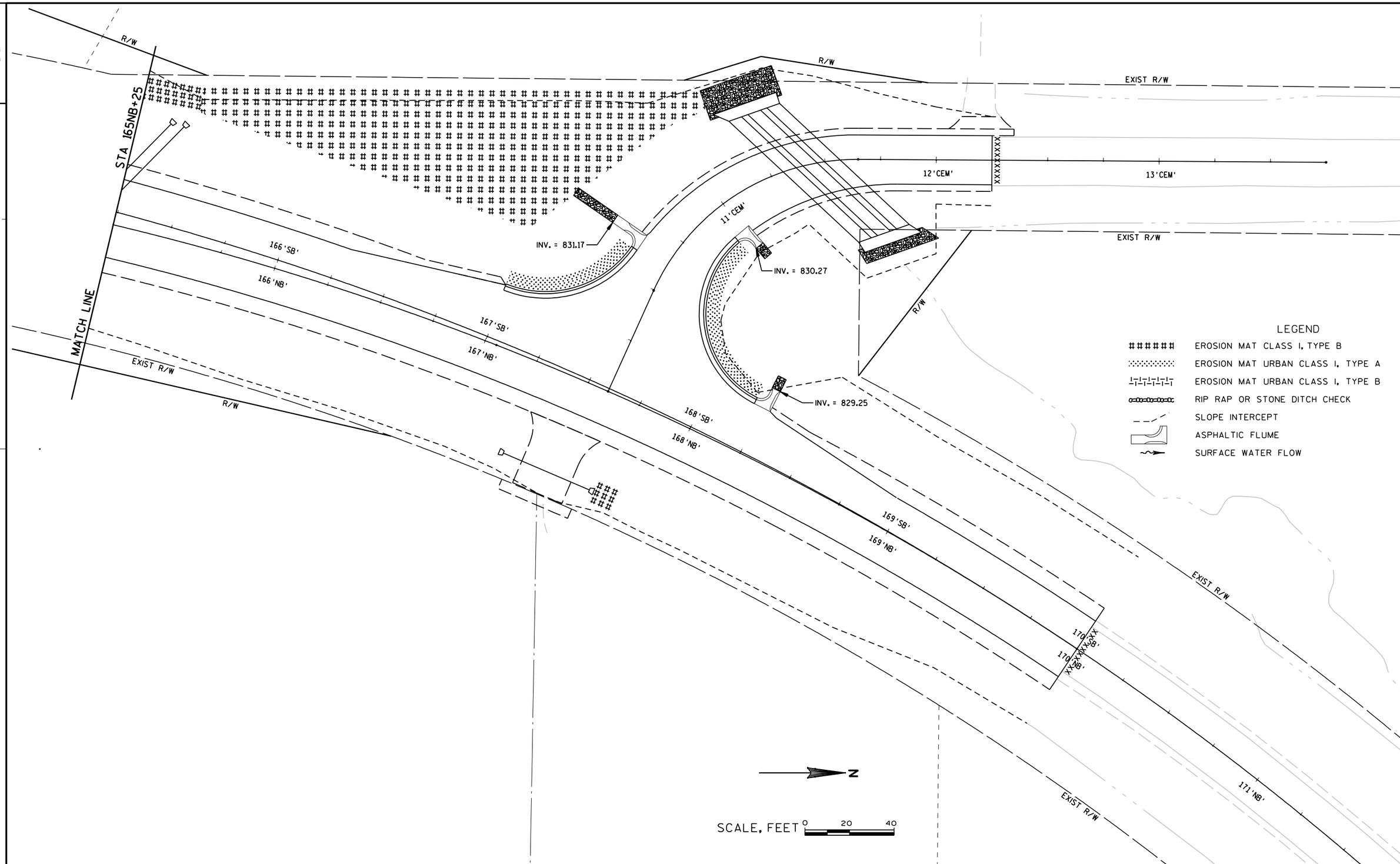

2

PROJECT NO:1500-32-71	HWY:USH 10	COUNTY:CALUMET	EROSION CONTROL PERMANENT - STH 32/57 NORTH	SHEET 38	E

2

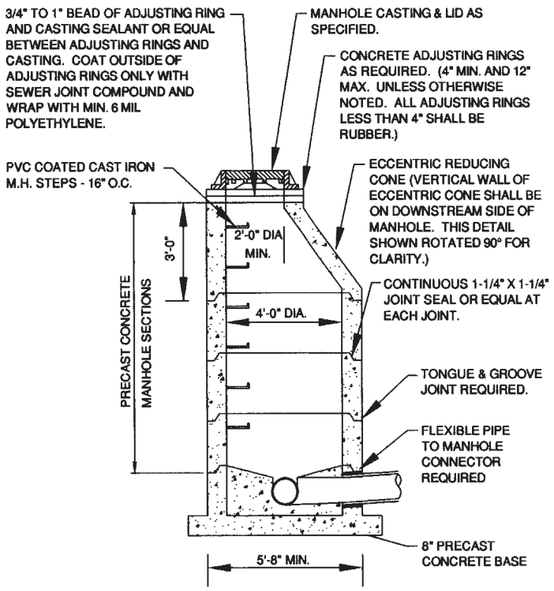

SANITARY AND STORM STANDARD MANHOLE 8"-24" (INCLUSIVE)

REVISED 7/27/10
H:\DETAIL\1000\1001

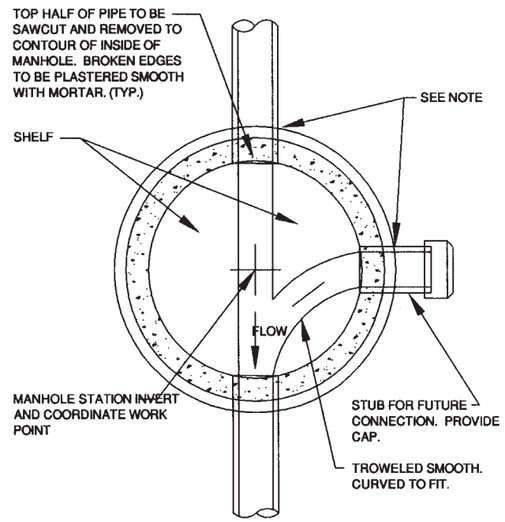

NOTE:
FOR PVC PIPE PROVIDE AN APPROVED FLEXIBLE JOINT.

MANHOLE BASE PLAN 8" - 60" (INCLUSIVE)

REVISED 03/12/10
H:\DETAIL\1000\1003

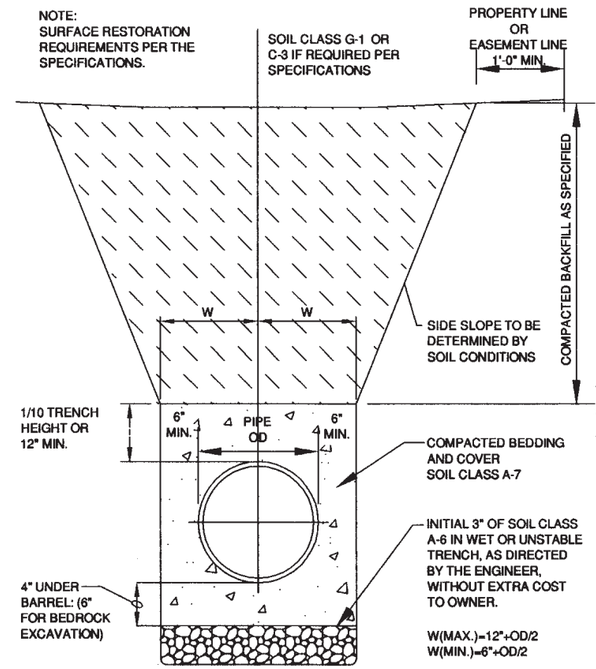

HDPE /PVC SEWER & WATERMAIN & FORCEMAIN BEDDING & TRENCH SECTION

REVISED 5/27/2010
H:\DETAIL\50006001

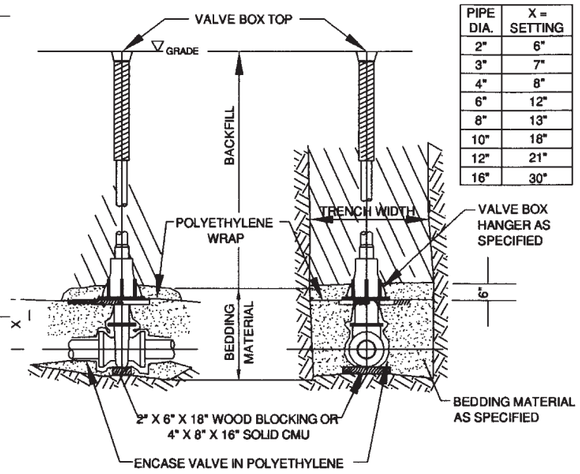

PIPE DIA.	X = SETTING
2"	6"
3"	7"
4"	8"
6"	12"
8"	13"
10"	18"
12"	21"
16"	30"

VALVE BOX SETTING

REVISED 4/1/04
H:\DETAIL\3000\3003

2

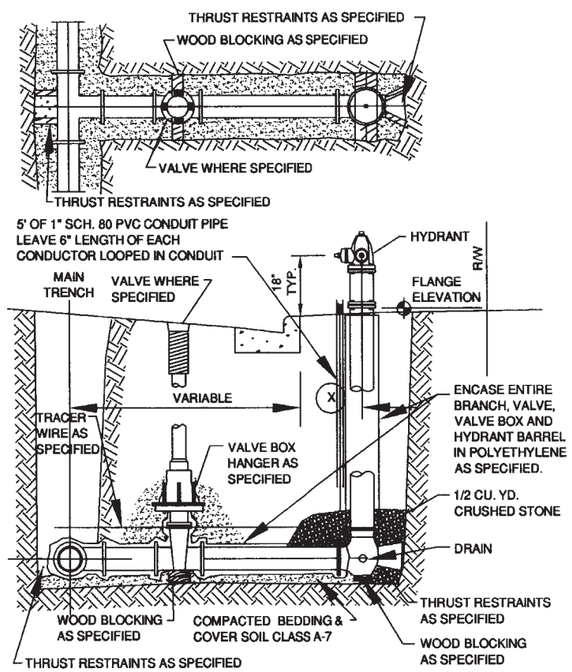

STANDARD HYDRANT SETTING CURB SECTION

REVISED 5/25/2011
H:\DETAIL\30003001

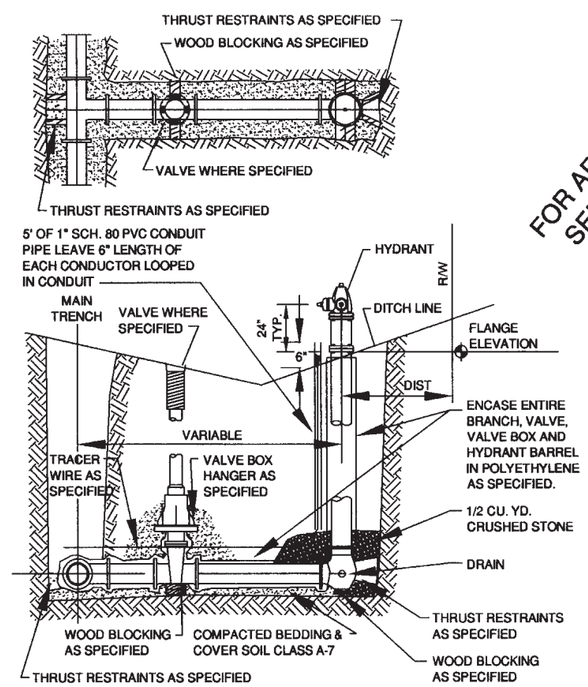

STANDARD HYDRANT SETTING DITCH SECTION

REVISED 3/22/02
H:\DETAIL\30003002

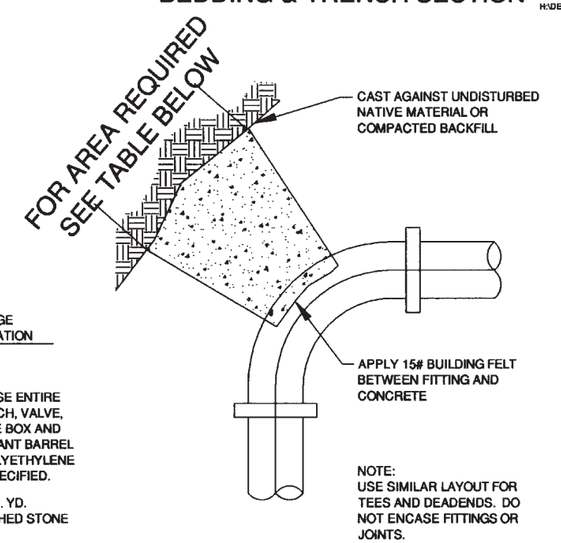

THRUST BLOCK AREA REQUIREMENTS, SQ. FT.				
DEGREE OF BEND	4" PIPE	6" PIPE	8" PIPE	10" PIPE
5° TO 22.5°	0.5	0.5	1.0	1.5
23° TO 45°	0.5	1.0	2.0	3.0
46° TO 90°	1.0	2.0	4.0	6.0
TEE OR DEAD END	1.0	2.0	4.0	6.0

TYPICAL THRUST BLOCK

REVISED 03/06/08
H:\DETAIL\30003006

WISCONSIN
LEE G. NOVAK
E-23661
Green Bay,
PROFESSIONAL ENGINEER

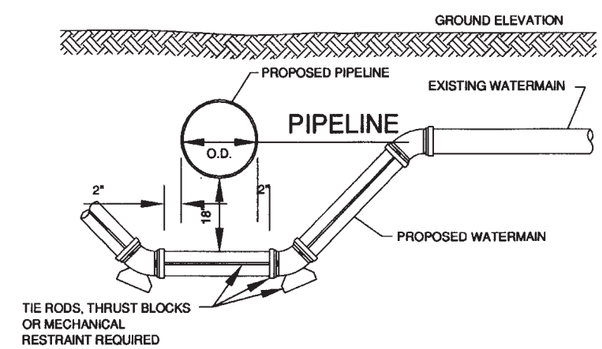

DETAIL FOR WATERMAIN OFFSET

REVISED 08-03-09
H:\DETAIL\30003008

NOTE: THIS SHEET WAS PREPARED BY ROBERT E. LEE AND ASSOCIATES FOR FOREST JUNCTION UTILITES. SHEET 1 OF 4

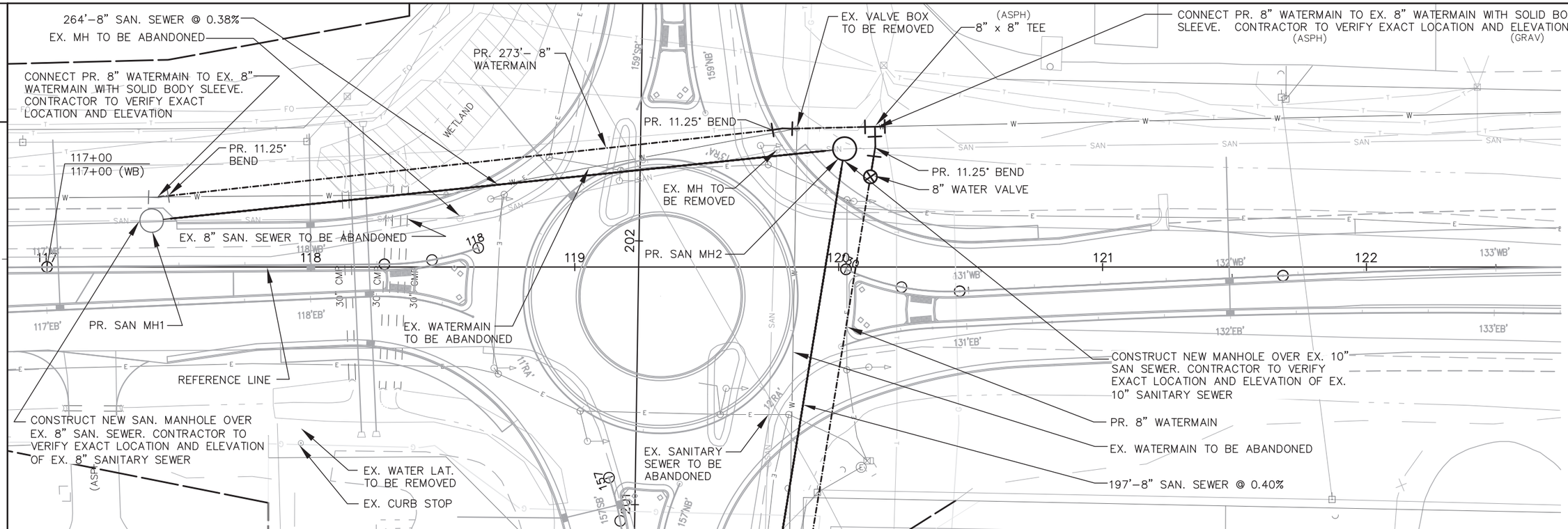

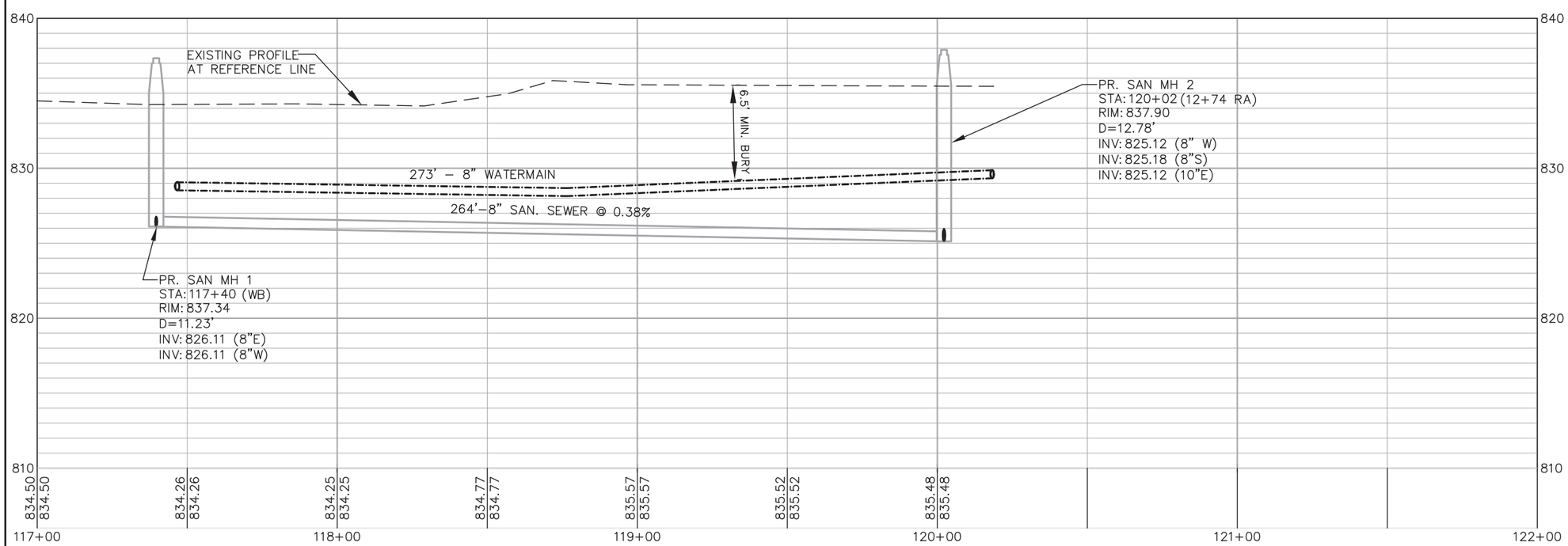

NOTE: THIS SHEET WAS PREPARED BY ROBERT E. LEE AND ASSOCIATES FOR FOREST JUNCTION UTILITES. SHEET 2 OF 3

PROJECT NO:1500-32-71	HWY:USH 10	COUNTY:CALUMET	UTILITY PLAN : USH 10 SANITARY/WATER	SHEET 40

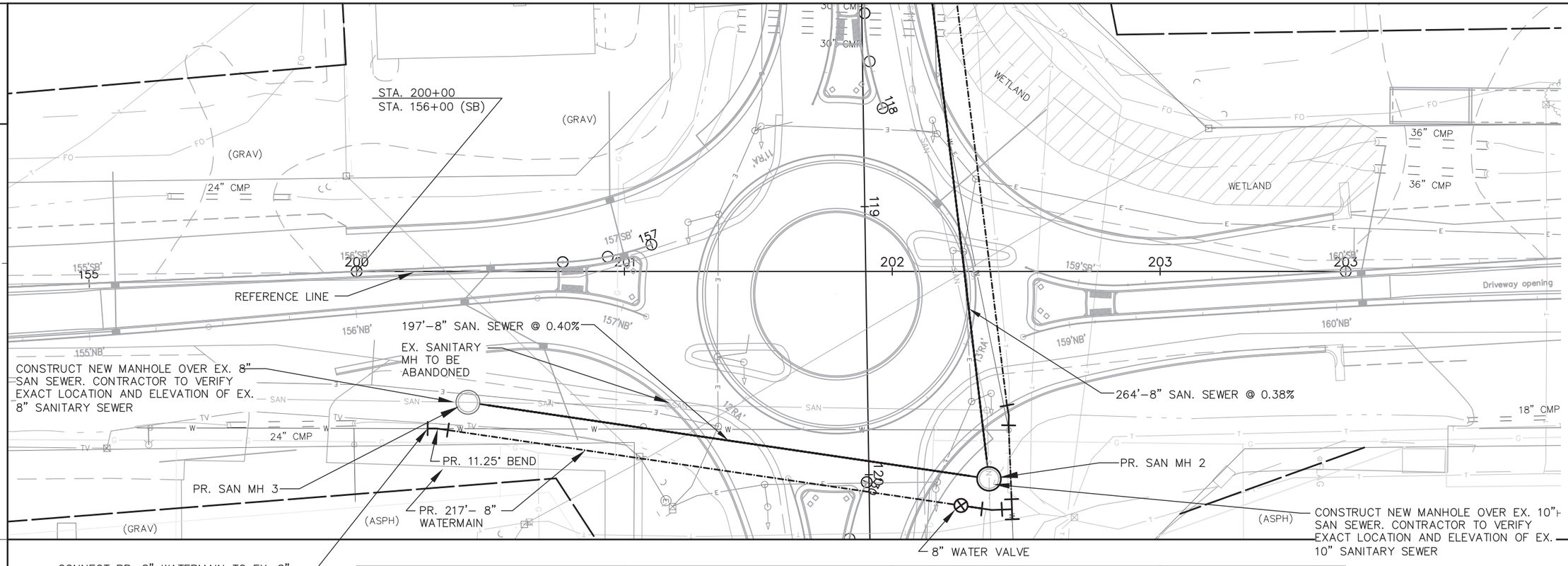

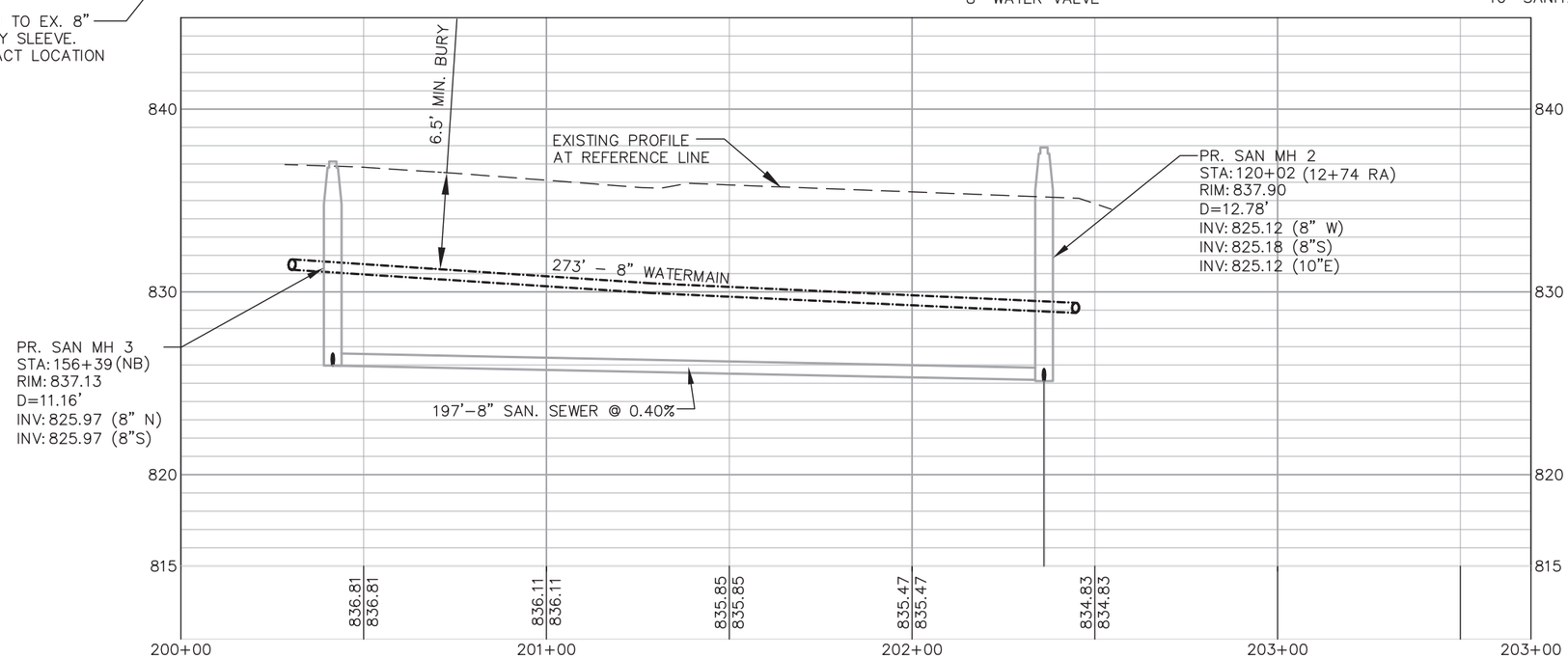

NOTE: THIS SHEET WAS PREPARED BY ROBERT E. LEE AND ASSOCIATES FOR FOREST JUNCTION UTILITES. SHEET 3 OF 3

PROJECT NO:1500-32-71	HWY:USH 10	COUNTY:CALUMET	UTILITY PLAN: USH 10 SANITARY WATER	SHEET 41	E

FILE NAME : R:\2300\2303\2303046\DWG\12303046D(2010).DWG PLOT DATE : 8/8/2012 11:14 AM PLOT BY : RANDAL L. ROETHLE PLOT NAME : PLOT SCALE : 1 IN:40 FT

WISDOT/CADDS SHEET 44

2

PLANT DATA CHART

SYMBOL	COMMON NAME	SCIENTIFIC NAME	TYPE	AVE MATURE HEIGHT	SIZE (GAL OR HT) WHEN PLANTED	ROOT ZONE MODE*	BALL/POT DIAM.	BALL/POT DEPTH	PLANT HOLE DIAM.	PLANT HOLE DEPTH	BRACE OR GUY	FERT. UNITS REQ'D
MJ	JUNIPER, MANEY	JUNIPERUS CHINENSIS "MANEY"	2C	5'-0"'	15" SPD	CG	10"	6.5"	34"	6.5"	NONE	2
RR	ROSE, RUGOSA	ROSA RUGOSA 'AGNES'	3S	4'-6'	2' HT	B&B	10"	6.5"	34"	6.5"	NONE	2
AS	SERVICEBERRY, APPLE	AMELANCHIER X GRANDIFLORA 'AUTUMN BRILLIANCE'	3S	20'-25'	12'-14' HT	B&B	8"	5"	32"	5"	BRACE	3

* B&B: BALLED AND BURLAPED
CG: CONTAINER GROWN

2

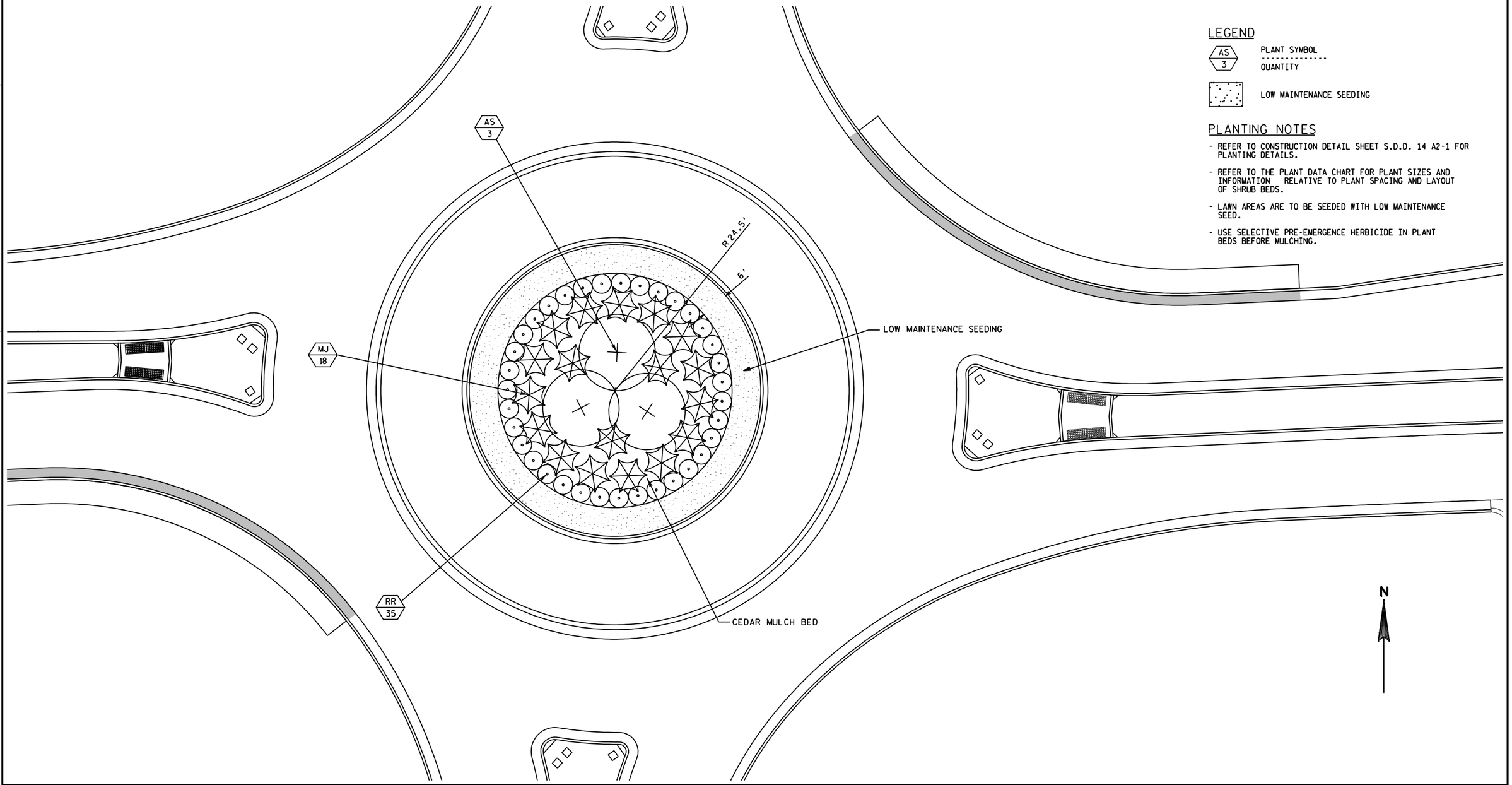

LEGEND

AS / 3 — PLANT SYMBOL / QUANTITY

LOW MAINTENANCE SEEDING

PLANTING NOTES

- REFER TO CONSTRUCTION DETAIL SHEET S.D.D. 14 A2-1 FOR PLANTING DETAILS.
- REFER TO THE PLANT DATA CHART FOR PLANT SIZES AND INFORMATION RELATIVE TO PLANT SPACING AND LAYOUT OF SHRUB BEDS.
- LAWN AREAS ARE TO BE SEEDED WITH LOW MAINTENANCE SEED.
- USE SELECTIVE PRE-EMERGENCE HERBICIDE IN PLANT BEDS BEFORE MULCHING.

PROJECT NO:1500-32-71	HWY:USH 10	COUNTY:CALUMET	PLANTING PLAN	SHEET 42	E

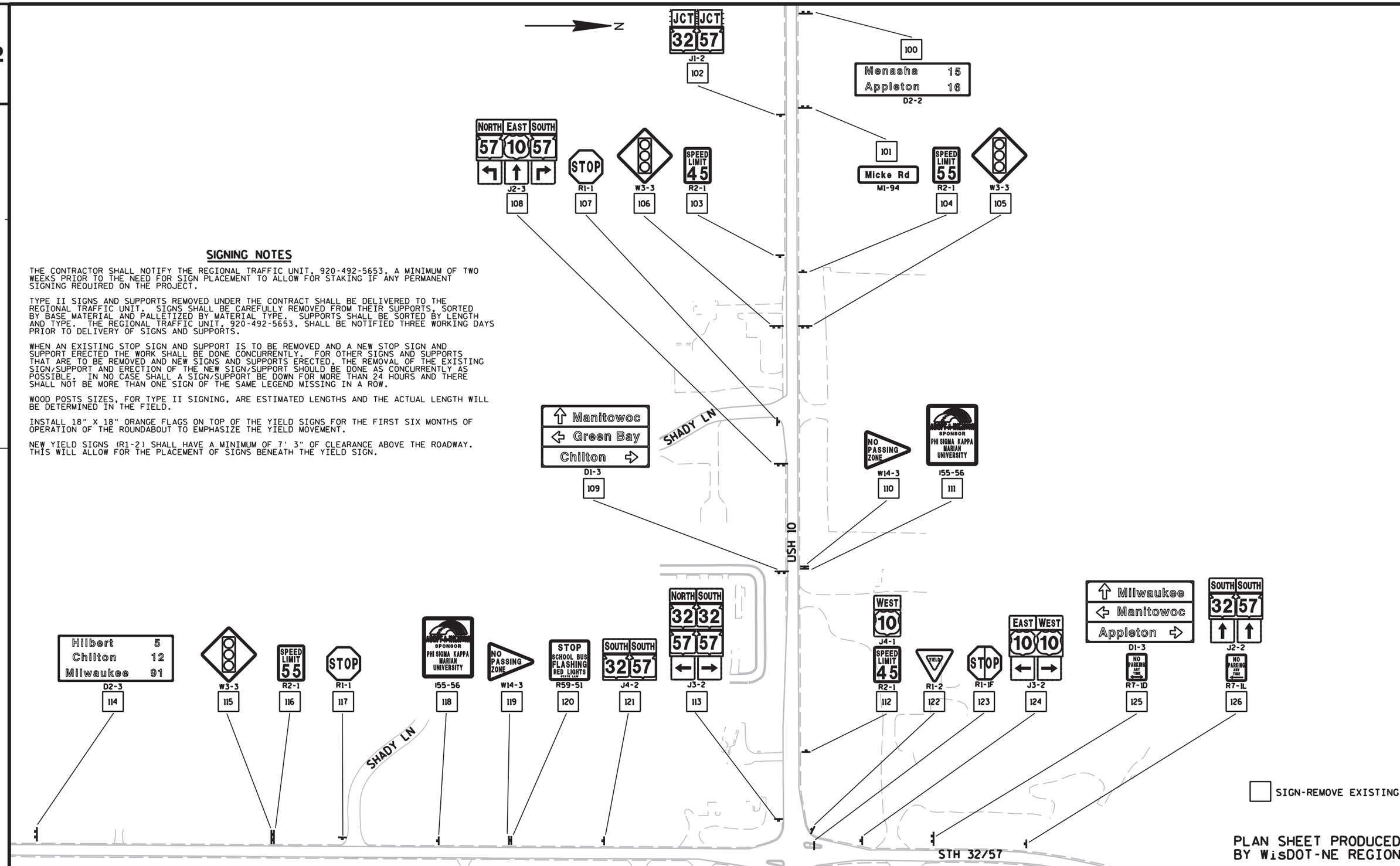

SIGNING NOTES

THE CONTRACTOR SHALL NOTIFY THE REGIONAL TRAFFIC UNIT, 920-492-5653, A MINIMUM OF TWO WEEKS PRIOR TO THE NEED FOR SIGN PLACEMENT TO ALLOW FOR STAKING IF ANY PERMANENT SIGNING REQUIRED ON THE PROJECT.

TYPE II SIGNS AND SUPPORTS REMOVED UNDER THE CONTRACT SHALL BE DELIVERED TO THE REGIONAL TRAFFIC UNIT. SIGNS SHALL BE CAREFULLY REMOVED FROM THEIR SUPPORTS, SORTED BY BASE MATERIAL AND PALLETIZED BY MATERIAL TYPE. SUPPORTS SHALL BE SORTED BY LENGTH AND TYPE. THE REGIONAL TRAFFIC UNIT, 920-492-5653, SHALL BE NOTIFIED THREE WORKING DAYS PRIOR TO DELIVERY OF SIGNS AND SUPPORTS.

WHEN AN EXISTING STOP SIGN AND SUPPORT IS TO BE REMOVED AND A NEW STOP SIGN AND SUPPORT ERECTED THE WORK SHALL BE DONE CONCURRENTLY. FOR OTHER SIGNS AND SUPPORTS THAT ARE TO BE REMOVED AND NEW SIGNS AND SUPPORTS ERECTED, THE REMOVAL OF THE EXISTING SIGN/SUPPORT AND ERECTION OF THE NEW SIGN/SUPPORT SHOULD BE DONE AS CONCURRENTLY AS POSSIBLE. IN NO CASE SHALL A SIGN/SUPPORT BE DOWN FOR MORE THAN 24 HOURS AND THERE SHALL NOT BE MORE THAN ONE SIGN OF THE SAME LEGEND MISSING IN A ROW.

WOOD POSTS SIZES, FOR TYPE II SIGNING, ARE ESTIMATED LENGTHS AND THE ACTUAL LENGTH WILL BE DETERMINED IN THE FIELD.

INSTALL 18" X 18" ORANGE FLAGS ON TOP OF THE YIELD SIGNS FOR THE FIRST SIX MONTHS OF OPERATION OF THE ROUNDABOUT TO EMPHASIZE THE YIELD MOVEMENT.

NEW YIELD SIGNS (R1-2) SHALL HAVE A MINIMUM OF 7' 3" OF CLEARANCE ABOVE THE ROADWAY. THIS WILL ALLOW FOR THE PLACEMENT OF SIGNS BENEATH THE YIELD SIGN.

PLAN SHEET PRODUCED BY WisDOT-NE REGION

PROJECT NO:1500-32-71	HWY:USH 10	COUNTY:CALUMET	SIGN REMOVALS	SHEET E

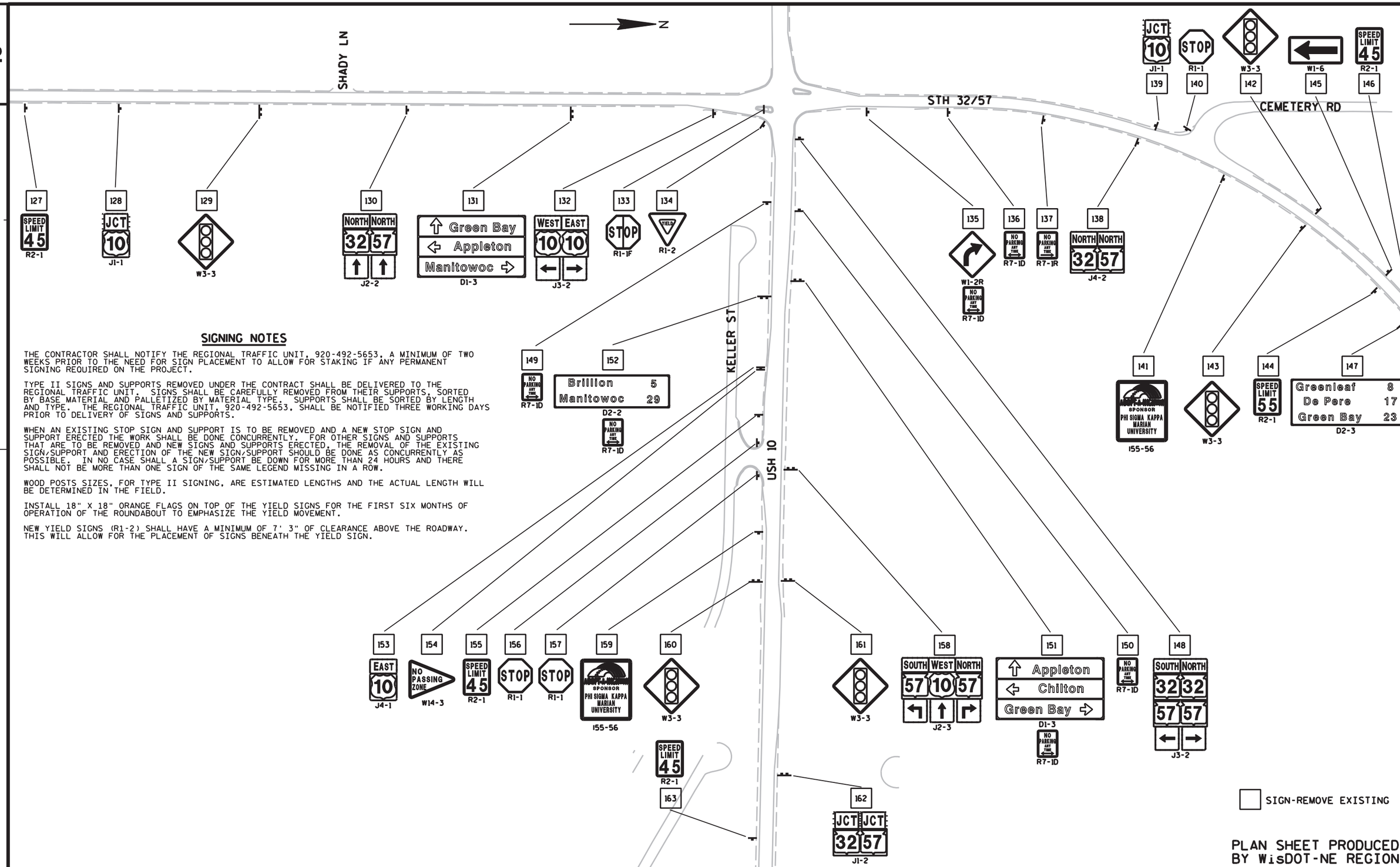

SIGNING NOTES

THE CONTRACTOR SHALL NOTIFY THE REGIONAL TRAFFIC UNIT, 920-492-5653, A MINIMUM OF TWO WEEKS PRIOR TO THE NEED FOR SIGN PLACEMENT TO ALLOW FOR STAKING IF ANY PERMANENT SIGNING REQUIRED ON THE PROJECT.

TYPE II SIGNS AND SUPPORTS REMOVED UNDER THE CONTRACT SHALL BE DELIVERED TO THE REGIONAL TRAFFIC UNIT. SIGNS SHALL BE CAREFULLY REMOVED FROM THEIR SUPPORTS, SORTED BY BASE MATERIAL AND PALLETIZED BY MATERIAL TYPE. SUPPORTS SHALL BE SORTED BY LENGTH AND TYPE. THE REGIONAL TRAFFIC UNIT, 920-492-5653, SHALL BE NOTIFIED THREE WORKING DAYS PRIOR TO DELIVERY OF SIGNS AND SUPPORTS.

WHEN AN EXISTING STOP SIGN AND SUPPORT IS TO BE REMOVED AND A NEW STOP SIGN AND SUPPORT ERECTED THE WORK SHALL BE DONE CONCURRENTLY. FOR OTHER SIGNS AND SUPPORTS THAT ARE TO BE REMOVED AND NEW SIGNS AND SUPPORTS ERECTED, THE REMOVAL OF THE EXISTING SIGN/SUPPORT AND ERECTION OF THE NEW SIGN/SUPPORT SHOULD BE DONE AS CONCURRENTLY AS POSSIBLE. IN NO CASE SHALL A SIGN/SUPPORT BE DOWN FOR MORE THAN 24 HOURS AND THERE SHALL NOT BE MORE THAN ONE SIGN OF THE SAME LEGEND MISSING IN A ROW.

WOOD POSTS SIZES, FOR TYPE II SIGNING, ARE ESTIMATED LENGTHS AND THE ACTUAL LENGTH WILL BE DETERMINED IN THE FIELD.

INSTALL 18" X 18" ORANGE FLAGS ON TOP OF THE YIELD SIGNS FOR THE FIRST SIX MONTHS OF OPERATION OF THE ROUNDABOUT TO EMPHASIZE THE YIELD MOVEMENT.

NEW YIELD SIGNS (R1-2) SHALL HAVE A MINIMUM OF 7' 3" OF CLEARANCE ABOVE THE ROADWAY. THIS WILL ALLOW FOR THE PLACEMENT OF SIGNS BENEATH THE YIELD SIGN.

PLAN SHEET PRODUCED BY WisDOT-NE REGION

PROJECT NO:1500-32-71	HWY:USH 10	COUNTY:CALUMET	SIGN REMOVALS	SHEET 44	E

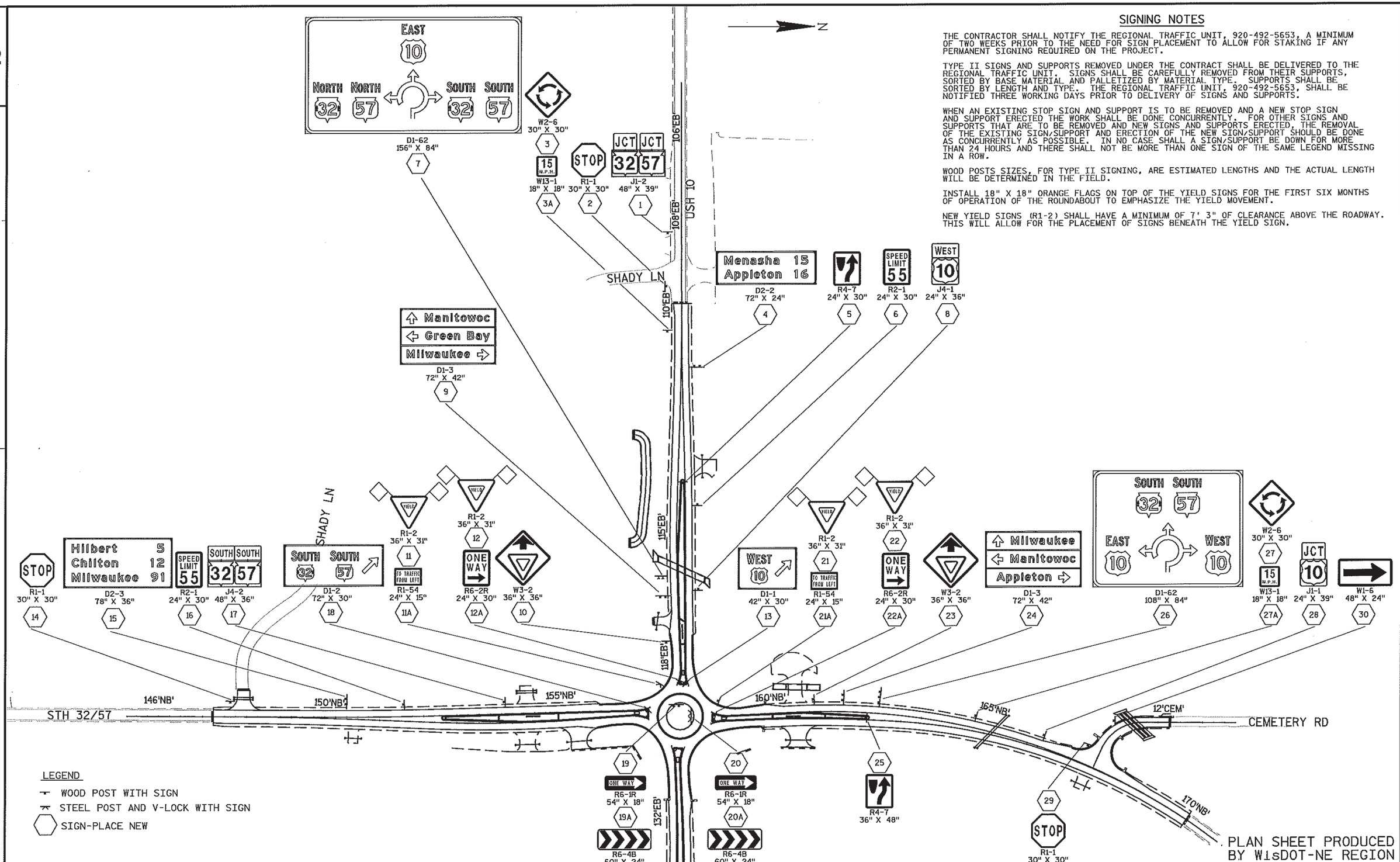

SIGNING NOTES

THE CONTRACTOR SHALL NOTIFY THE REGIONAL TRAFFIC UNIT, 920-492-5653, A MINIMUM OF TWO WEEKS PRIOR TO THE NEED FOR SIGN PLACEMENT TO ALLOW FOR STAKING IF ANY PERMANENT SIGNING REQUIRED ON THE PROJECT.

TYPE II SIGNS AND SUPPORTS REMOVED UNDER THE CONTRACT SHALL BE DELIVERED TO THE REGIONAL TRAFFIC UNIT. SIGNS SHALL BE CAREFULLY REMOVED FROM THEIR SUPPORTS, SORTED BY BASE MATERIAL AND PALLETIZED BY MATERIAL TYPE. SUPPORTS SHALL BE SORTED BY LENGTH AND TYPE. THE REGIONAL TRAFFIC UNIT, 920-492-5653, SHALL BE NOTIFIED THREE WORKING DAYS PRIOR TO DELIVERY OF SIGNS AND SUPPORTS.

WHEN AN EXISTING STOP SIGN AND SUPPORT IS TO BE REMOVED AND A NEW STOP SIGN AND SUPPORT ERECTED THE WORK SHALL BE DONE CONCURRENTLY. FOR OTHER SIGNS AND SUPPORTS THAT ARE TO BE REMOVED AND NEW SIGNS AND SUPPORTS ERECTED, THE REMOVAL OF THE EXISTING SIGN/SUPPORT AND ERECTION OF THE NEW SIGN/SUPPORT SHOULD BE DONE AS CONCURRENTLY AS POSSIBLE. IN NO CASE SHALL A SIGN/SUPPORT BE DOWN FOR MORE THAN 24 HOURS AND THERE SHALL NOT BE MORE THAN ONE SIGN OF THE SAME LEGEND MISSING IN A ROW.

WOOD POSTS SIZES, FOR TYPE II SIGNING, ARE ESTIMATED LENGTHS AND THE ACTUAL LENGTH WILL BE DETERMINED IN THE FIELD.

INSTALL 18" X 18" ORANGE FLAGS ON TOP OF THE YIELD SIGNS FOR THE FIRST SIX MONTHS OF OPERATION OF THE ROUNDABOUT TO EMPHASIZE THE YIELD MOVEMENT.

NEW YIELD SIGNS (R1-2) SHALL HAVE A MINIMUM OF 7' 3" OF CLEARANCE ABOVE THE ROADWAY. THIS WILL ALLOW FOR THE PLACEMENT OF SIGNS BENEATH THE YIELD SIGN.

PLAN SHEET PRODUCED BY WIsDOT-NE REGION

PROJECT NO:1500-32-71	HWY: USH 10	COUNTY: CALUMET	PERMANENT SIGNING	SHEET 45	E

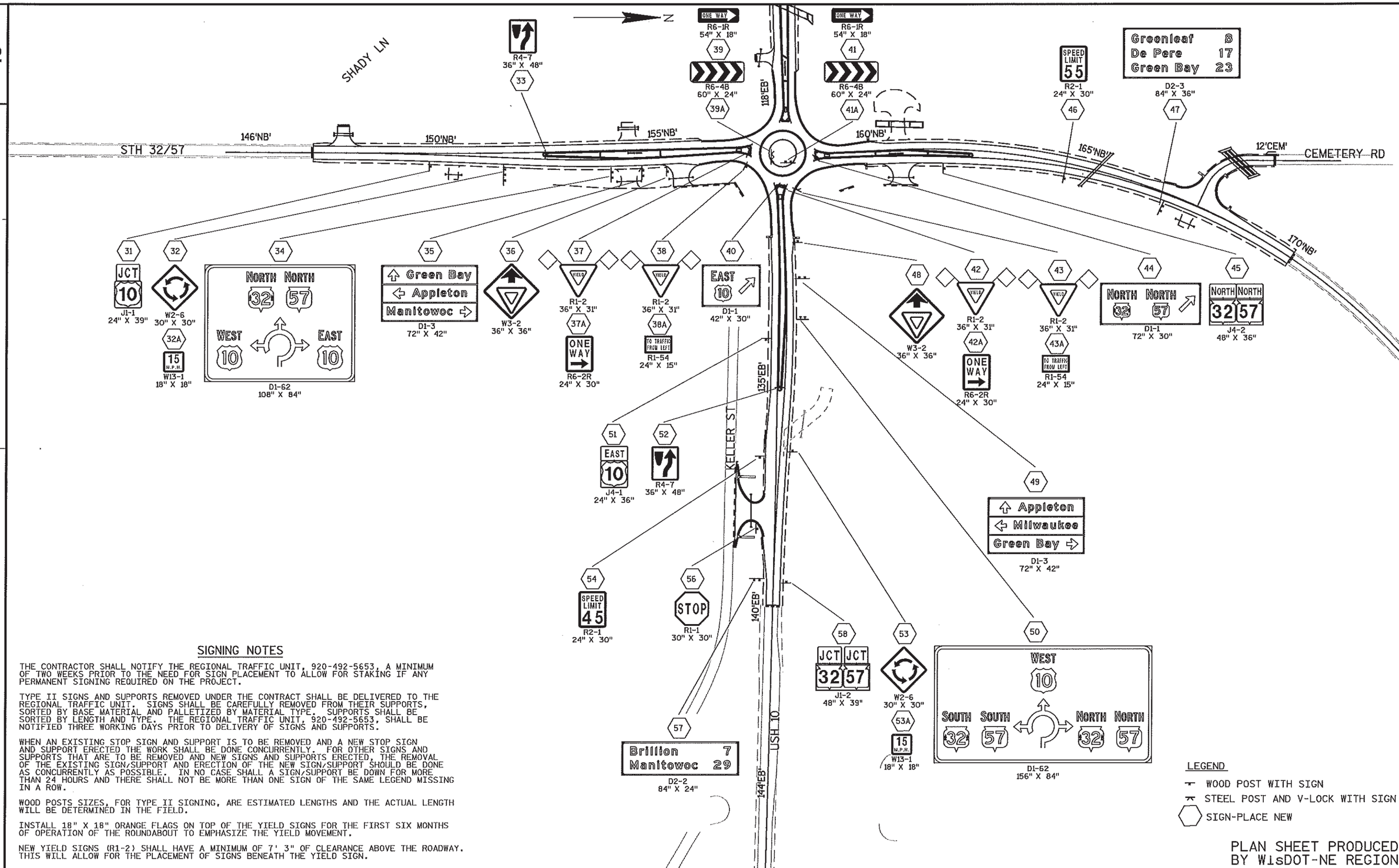

SIGNING NOTES

THE CONTRACTOR SHALL NOTIFY THE REGIONAL TRAFFIC UNIT, 920-492-5653, A MINIMUM OF TWO WEEKS PRIOR TO THE NEED FOR SIGN PLACEMENT TO ALLOW FOR STAKING IF ANY PERMANENT SIGNING REQUIRED ON THE PROJECT.

TYPE II SIGNS AND SUPPORTS REMOVED UNDER THE CONTRACT SHALL BE DELIVERED TO THE REGIONAL TRAFFIC UNIT. SIGNS SHALL BE CAREFULLY REMOVED FROM THEIR SUPPORTS, SORTED BY BASE MATERIAL AND PALLETIZED BY MATERIAL TYPE. SUPPORTS SHALL BE SORTED BY LENGTH AND TYPE. THE REGIONAL TRAFFIC UNIT, 920-492-5653, SHALL BE NOTIFIED THREE WORKING DAYS PRIOR TO DELIVERY OF SIGNS AND SUPPORTS.

WHEN AN EXISTING STOP SIGN AND SUPPORT IS TO BE REMOVED AND A NEW STOP SIGN AND SUPPORT ERECTED THE WORK SHALL BE DONE CONCURRENTLY. FOR OTHER SIGNS AND SUPPORTS THAT ARE TO BE REMOVED AND NEW SIGNS AND SUPPORTS ERECTED, THE REMOVAL OF THE EXISTING SIGN/SUPPORT AND ERECTION OF THE NEW SIGN/SUPPORT SHOULD BE DONE AS CONCURRENTLY AS POSSIBLE. IN NO CASE SHALL A SIGN/SUPPORT BE DOWN FOR MORE THAN 24 HOURS AND THERE SHALL NOT BE MORE THAN ONE SIGN OF THE SAME LEGEND MISSING IN A ROW.

WOOD POSTS SIZES, FOR TYPE II SIGNING, ARE ESTIMATED LENGTHS AND THE ACTUAL LENGTH WILL BE DETERMINED IN THE FIELD.

INSTALL 18" X 18" ORANGE FLAGS ON TOP OF THE YIELD SIGNS FOR THE FIRST SIX MONTHS OF OPERATION OF THE ROUNDABOUT TO EMPHASIZE THE YIELD MOVEMENT.

NEW YIELD SIGNS (R1-2) SHALL HAVE A MINIMUM OF 7' 3" OF CLEARANCE ABOVE THE ROADWAY. THIS WILL ALLOW FOR THE PLACEMENT OF SIGNS BENEATH THE YIELD SIGN.

LEGEND

- WOOD POST WITH SIGN
- STEEL POST AND V-LOCK WITH SIGN
- SIGN-PLACE NEW

PLAN SHEET PRODUCED BY WisDOT-NE REGION

PROJECT NO:1500-32-71	HWY:USH 10	COUNTY:CALUMET	PERMANENT SIGNING	SHEET 46	E

NOTES:

WISCONSIN DOT NORTHEAST REGION ELECTRICAL UNIT SHALL APPROVE FINAL LOCATIONS FOR ALL CONCRETE BASES IN THE FIELD PRIOR TO CONSTRUCTION. CONTACT THEM 3 DAYS IN ADVANCE AT (920) 492-5710.

2" DRAIN DUCT TO DITCH REQUIRED AS DEPICTED. THIS 2" DRAIN DUCT IS INCIDENTAL TO THE PULL BOX BID ITEM.

THE LOCATION OF EXISTING AND PROPOSED UTILITIES AS SHOWN ON THE PLANS ARE APPROXIMATE. IN ADDITION, THERE MAY BE OTHER UTILITIES WITHIN THE PROJECT AREA WHICH ARE NOT SHOWN. THE CONTRACTOR SHALL VERIFY THE LOCATIONS OF ALL UTILITIES PRIOR TO CONSTRUCTION.

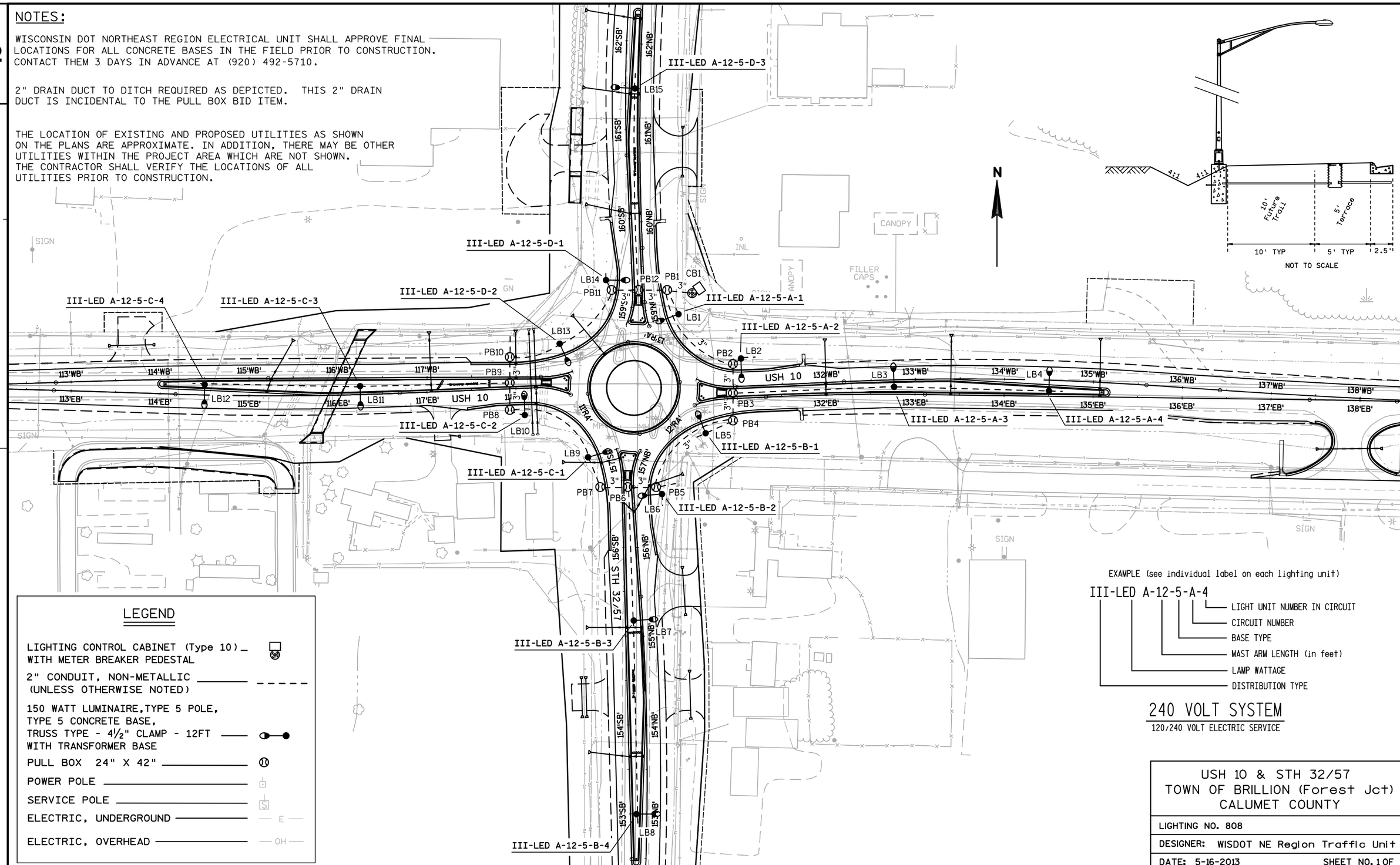

EXAMPLE (see individual label on each lighting unit)

III-LED A-12-5-A-4

- LIGHT UNIT NUMBER IN CIRCUIT
- CIRCUIT NUMBER
- BASE TYPE
- MAST ARM LENGTH (in feet)
- LAMP WATTAGE
- DISTRIBUTION TYPE

240 VOLT SYSTEM

120/240 VOLT ELECTRIC SERVICE

LEGEND

- LIGHTING CONTROL CABINET (Type 10) WITH METER BREAKER PEDESTAL
- 2" CONDUIT, NON-METALLIC (UNLESS OTHERWISE NOTED)
- 150 WATT LUMINAIRE, TYPE 5 POLE, TYPE 5 CONCRETE BASE, TRUSS TYPE - 4½" CLAMP - 12FT WITH TRANSFORMER BASE
- PULL BOX 24" X 42"
- POWER POLE
- SERVICE POLE
- ELECTRIC, UNDERGROUND — E —
- ELECTRIC, OVERHEAD — OH —

USH 10 & STH 32/57
TOWN OF BRILLION (Forest Jct)
CALUMET COUNTY

LIGHTING NO. 808

DESIGNER: WISDOT NE Region Traffic Unit

DATE: 5-16-2013 SHEET NO. 1 OF 1

PROJECT NO: 1500-32-71	HWY: USH 10	COUNTY: CALUMET	CONSTRUCTION DETAIL - ROUNDABOUT LIGHTING	SHEET 47	E

CONTROL CABINET BASE TYPE	DIMENSIONS	C.Y. CONCRETE (APPROX.)
TYPE 10 - POST MOUNT	AS SHOWN	0.75

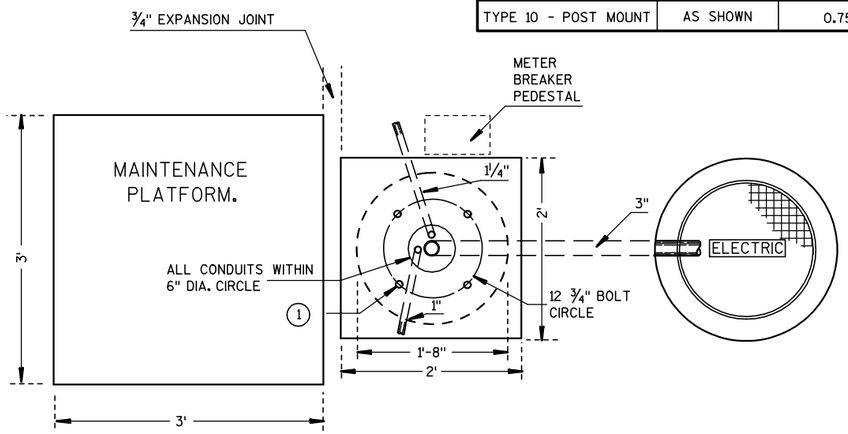

PLAN VIEW
Not to Scale

NOTE:
VERIFY WITH UTILITY COMPANY TO DETERMINE WHICH SIDE TO PLACE METER BREAKER PEDESTAL

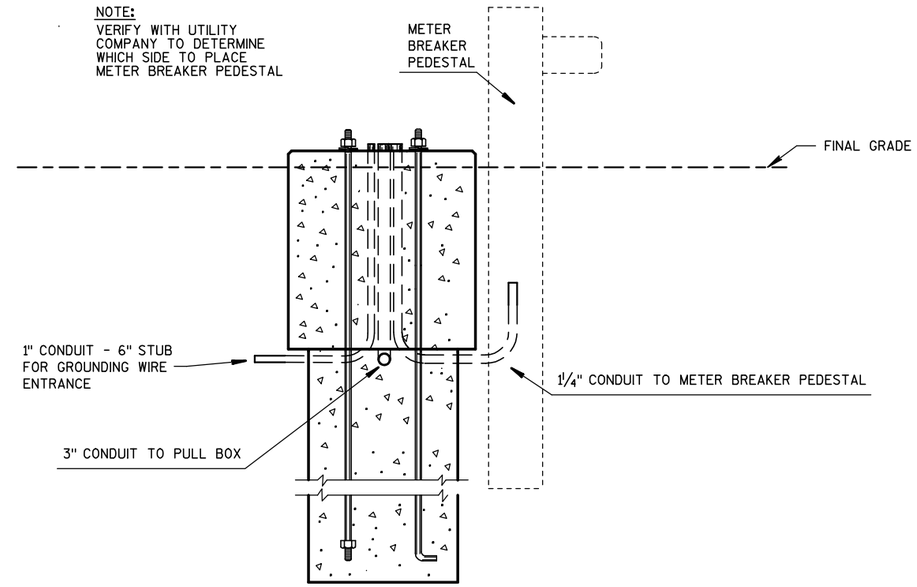

FRONT VIEW
Not to Scale

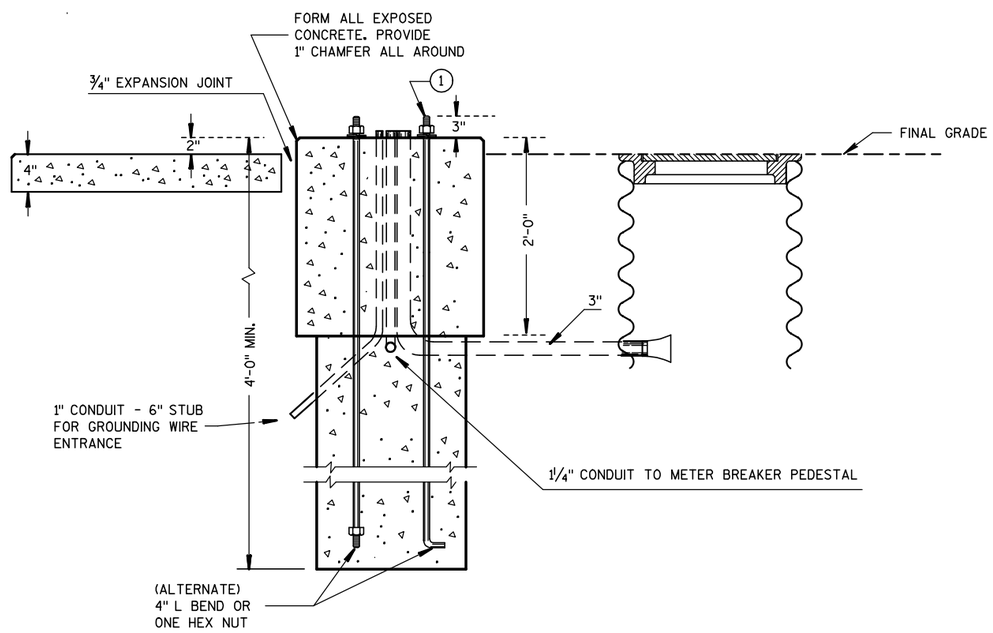

PROFILE VIEW
Not to Scale

GENERAL NOTES

DETAILS OF CONSTRUCTION, MATERIALS AND WORKMANSHIP NOT SHOWN ON THIS DRAWING SHALL CONFORM TO THE PERTINENT REQUIREMENTS OF THE CONTRACT.

WHEN REQUIRED TO CONNECT NONMETALLIC CONDUIT TO METALLIC CONDUIT, ONLY ADAPTER FITTINGS, U.L. LISTED FOR ELECTRICAL USE, SHALL BE USED.

CONDUIT HEIGHT ABOVE THE CONCRETE BASE SHALL BE 1 INCH.

CONTROL CABINET BASE TOP SURFACES SHALL BE TROWEL FINISHED AND LEVEL.

WHEN A TYPE 10 CONTROL CABINET BASE IS USED TO POST MOUNT A CONTROL CABINET, A 36" SQUARE 4" THICK CONCRETE MAINTENANCE PLATFORM SHALL BE REQUIRED ON THE DOOR SIDE OF THE CABINET. THE TOP 1 INCH SHALL BE ABOVE FINISHED GRADE AND BE BROOM FINISHED AND LEVEL.

MAINTENANCE PLATFORMS ARE NOT REQUIRED WHEN THE SURROUNDING AREA IS PAVED.

ALL CONDUIT ENDS AT THE TOP OF THE CONCRETE BASE SHALL PLUGGED IMMEDIATELY AFTER PLACEMENT AND BEFORE CONCRETE IS POURED. CONDUITS IN WHICH WIRE OR CABLE IS NOT BEING INSTALLED SHALL REMAIN CAPPED OR PLUGGED.

BELL ENDS SHALL BE INSTALLED ON ALL PVC CONDUIT EXPOSED AT THE TOP OF THE CONCRETE BASE BEFORE INSTALLATION OF CABLE OR WIRE.

WHEN ANCHOR RODS USING THE ALTERNATE L BEND ARE FURNISHED FOR THE TYPE 10 BASE, THE 4" L BEND SHALL BE IN ADDITION TO THE SPECIFIED ANCHOR ROD BAR LENGTH.

THE "L" BEND SHALL NOT BE THREADED.

STRAIGHT ANCHOR RODS SHALL BE THREADED 12" IN LENGTH ON EACH END OF THE ROD.

FOUR (4) ANCHOR RODS, 1" DIA. X 3'-6"
ANCHOR RODS SHALL BE MANUFACTURED IN ACCORDANCE WITH SECTION 654.2.1 AND 641.2.2 OF THE STANDARD SPECIFICATIONS AND IN ACCORDANCE WITH A-449, OR ASTM. A-687 (GRADE 105).

CONFIGURATION WITH HEAD NUMBERS		
3-V (R) (Y) (G) 1,3,4,6 7,9,10,12	3-H (R)(Y)(G) 2,5,8,11	

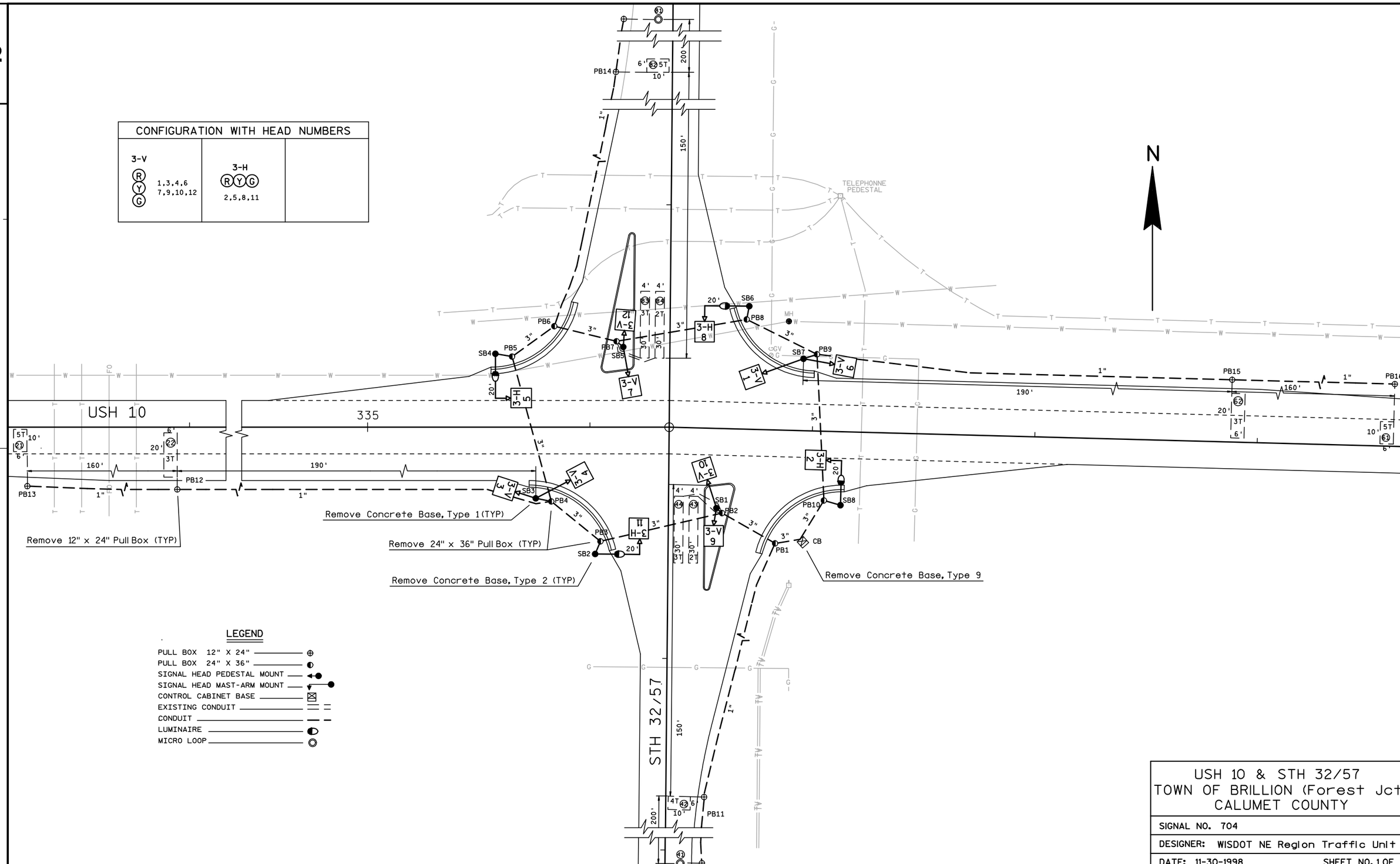

USH 10 & STH 32/57
TOWN OF BRILLION (Forest Jct)
CALUMET COUNTY

SIGNAL NO. 704

DESIGNER: WISDOT NE Region Traffic Unit

DATE: 11-30-1998 SHEET NO. 1 OF 1

PROJECT NO: 1500-32-71	HWY: USH 10	COUNTY: CALUMET	CONSTRUCTION DETAIL - REMOVE SIGNAL	SHEET 49	E

2

2

MATCH EXISITNG
PAVEMENT MARKINGS

EXISTING CENTERLINE SKIPS

Ⓓ

Ⓐ DOUBLE
YELLOW

Ⓑ

STA 114EB+75

110'WB'

+30

111'WB'

USH 10

112'WB'

113'WB'

114'WB'

109'EB'

110'EB'

+55

111'EB'

112'EB'

25'

113'EB'

114'EB'

Ⓐ

EXTEND SOLID YELLOW BARRIER LINE
FOR EASTBOUND TO STA 105+30 MINIMUM

Ⓓ

Ⓕ

Ⓐ

DOUBLE
YELLOW

Ⓗ

SHADY LN

MATCH LINE

4'PTJ'

3'PTJ'

PEACH TREE LN

PAVEMENT MARKING LEGEND

ALL PAVEMENT MARKINGS EPOXY UNLESS NOTED.
** GROOVED PREFORMED THERMOPLASTIC

Ⓐ CENTERLINE, 4-INCH, SOLID, YELLOW
Ⓑ EDGELINE, 4-INCH, YELLOW
Ⓒ LANE LINE, 4-INCH, WHITE
Ⓓ EDGELINE, 4-INCH, WHITE
Ⓔ CHANNELIZING LINE, 8-INCH, WHITE
Ⓕ DIAGONAL, 12-INCH, YELLOW
Ⓖ **YIELDLINE, 18-INCH, WHITE, 2' SEG/2' GAP
Ⓗ ISLAND NOSE, YELLOW

N

SCALE, FEET 0 20 40

PROJECT NO:1500-32-71	HWY:USH 10	COUNTY:CALUMET	PAVEMENT MARKING - USH 10	SHEET 50	E

PAVEMENT MARKING LEGEND

ALL PAVEMENT MARKINGS EPOXY UNLESS NOTED.
** GROOVED PREFORMED THERMOPLASTIC

- (A) CENTERLINE, 4-INCH, SOLID, YELLOW
- (B) EDGELINE, 4-INCH, YELLOW
- (C) LANE LINE, 4-INCH, WHITE
- (D) EDGELINE, 4-INCH, WHITE
- (E) CHANNELIZING LINE, 8-INCH, WHITE
- (F) DIAGONAL, 12-INCH, YELLOW
- (G) **YIELDLINE, 18-INCH, WHITE, 2' SEG/2' GAP
- (H) ISLAND NOSE, YELLOW
- (I) **WORDS, WHITE

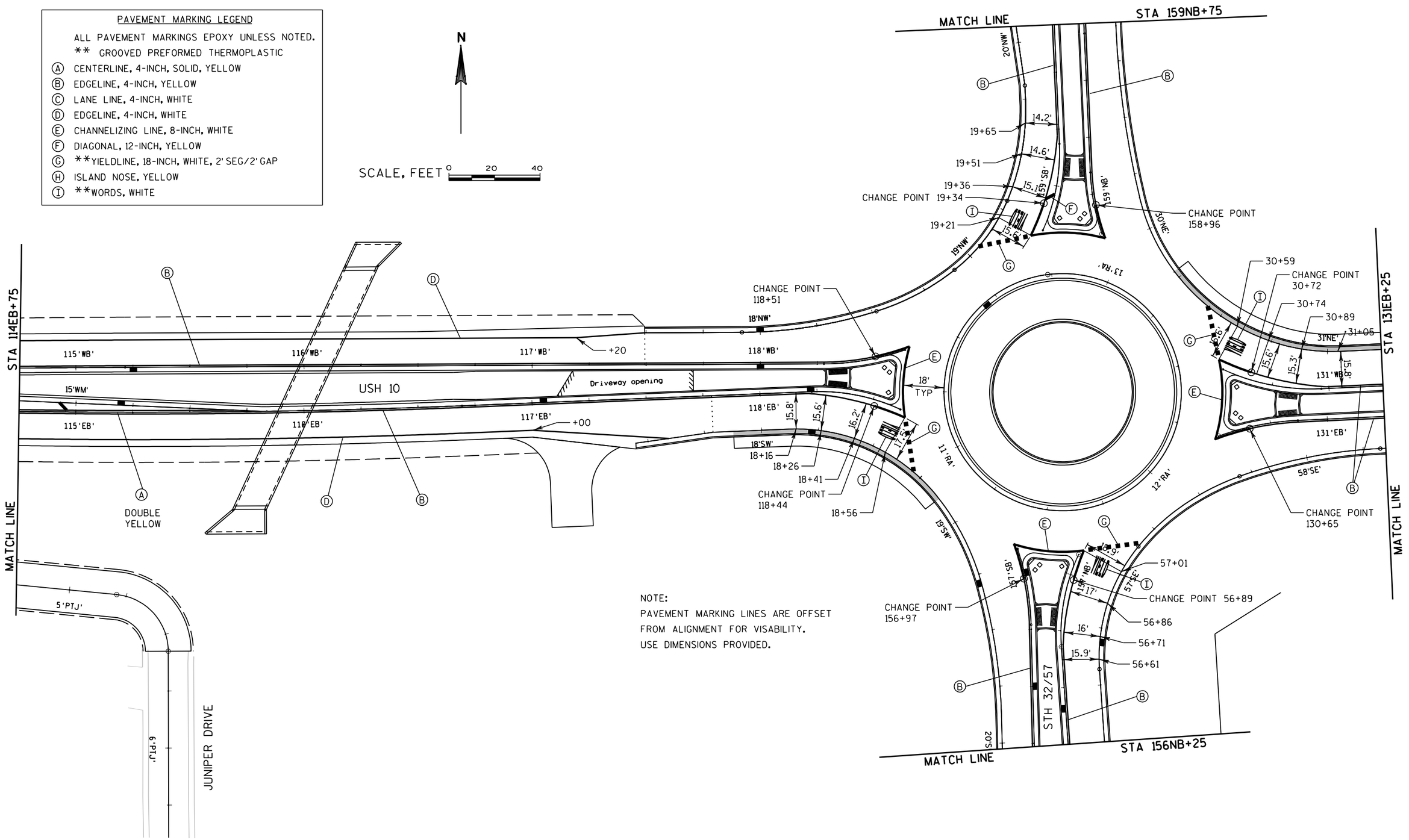

NOTE:
PAVEMENT MARKING LINES ARE OFFSET
FROM ALIGNMENT FOR VISABILITY.
USE DIMENSIONS PROVIDED.

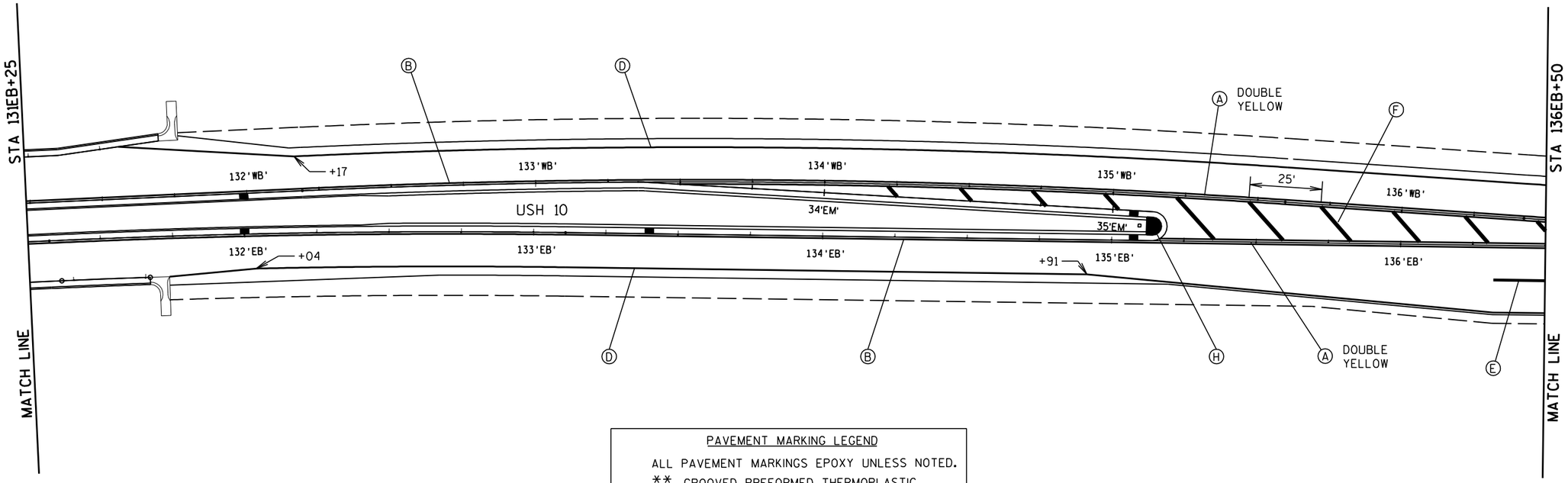

PAVEMENT MARKING LEGEND

ALL PAVEMENT MARKINGS EPOXY UNLESS NOTED.
** GROOVED PREFORMED THERMOPLASTIC

- (A) CENTERLINE, 4-INCH, SOLID, YELLOW
- (B) EDGELINE, 4-INCH, YELLOW
- (C) LANE LINE, 4-INCH, WHITE
- (D) EDGELINE, 4-INCH, WHITE
- (E) CHANNELIZING LINE, 8-INCH, WHITE
- (F) DIAGONAL, 12-INCH, YELLOW
- (G) **YIELDLINE, 18-INCH, WHITE, 2' SEG/2' GAP
- (H) ISLAND NOSE, YELLOW

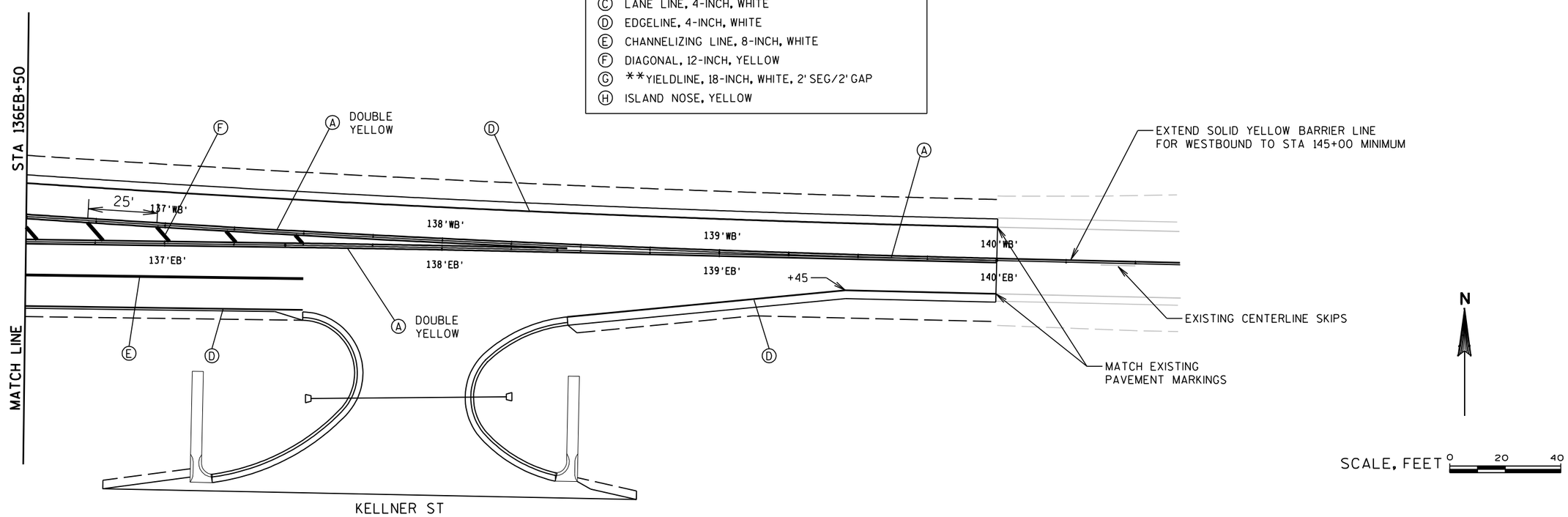

PROJECT NO:1500-32-71	HWY:USH 10	COUNTY:CALUMET	PAVEMENT MARKING - USH 10	SHEET 52	E

2

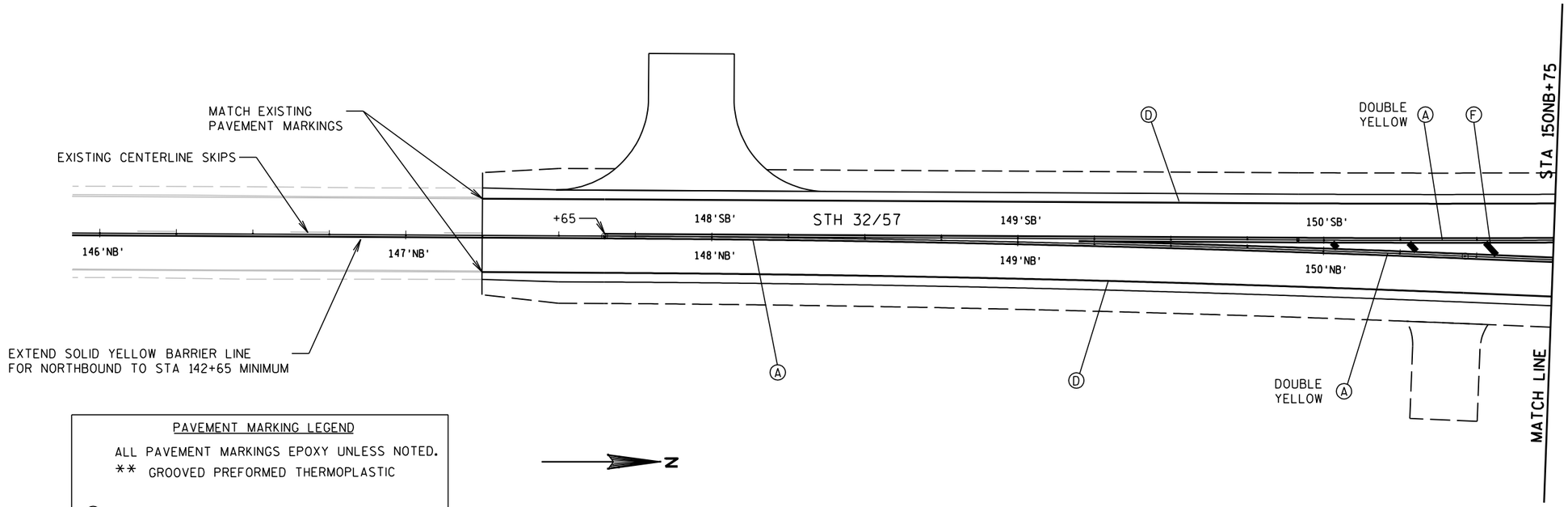

PAVEMENT MARKING LEGEND

ALL PAVEMENT MARKINGS EPOXY UNLESS NOTED.
** GROOVED PREFORMED THERMOPLASTIC

- (A) CENTERLINE, 4-INCH, SOLID, YELLOW
- (B) EDGELINE, 4-INCH, YELLOW
- (C) LANE LINE, 4-INCH, WHITE
- (D) EDGELINE, 4-INCH, WHITE
- (E) CHANNELIZING LINE, 8-INCH, WHITE
- (F) DIAGONAL, 12-INCH, YELLOW
- (G) **YIELDLINE, 18-INCH, WHITE, 2' SEG/2' GAP
- (H) ISLAND NOSE, YELLOW

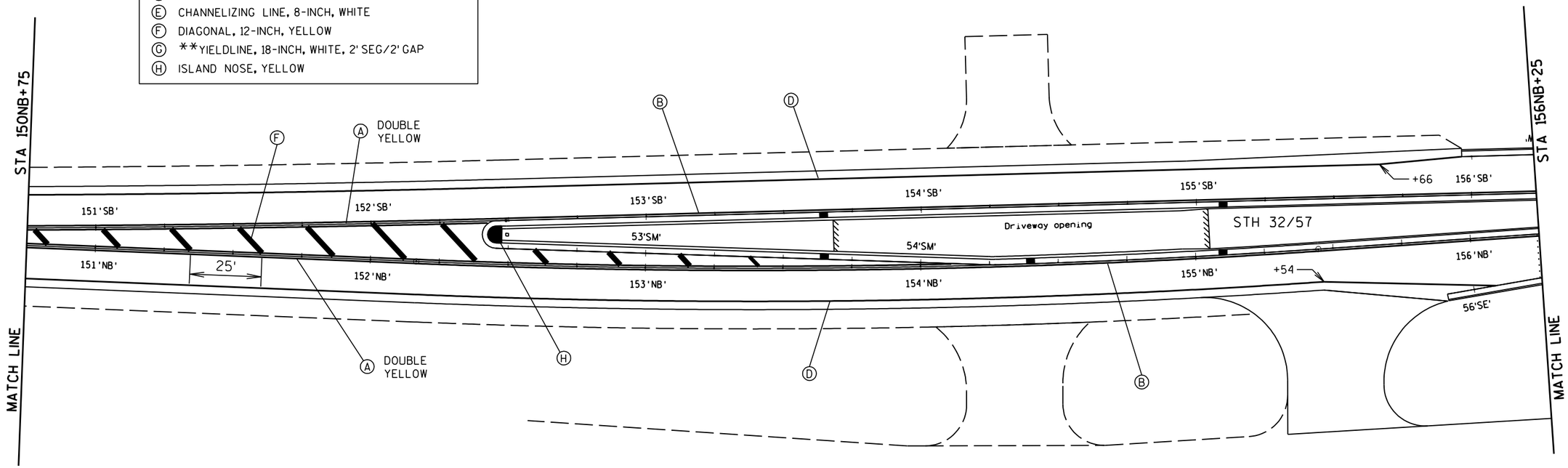

PROJECT NO:1500-32-71	HWY:USH 10	COUNTY:CALUMET	PAVEMENT MARKING - STH 32/57	SHEET 53	E

STA 159NB+75

MATCH LINE

+42

+25

160'SB'

160'NB'

161'SB'

161'NB'

61'NM'

62'NM'

Driveway opening

162'SB'

162'NB'

163'SB'

163'NB'

25'

164'SB'

164'NB'

165'SB'

165'NB'

STH 32/57

DOUBLE YELLOW

STA 165NB+50

MATCH LINE

SCALE, FEET 0 20 40

END PAVEMENT MARKINGS AT CONSTRUCTION LIMITS

CEMETARY RD

12'CEM'

11'CEM'

DOUBLE YELLOW

STA 165NB+50

MATCH LINE

+30

166'SB'

166'NB'

167'SB'

167'NB'

168'SB'

168'NB'

169'SB'

169'NB'

+20

170'SB'

170'NB'

171'NB'

MATCH EXISTING PAVEMENT MARKINGS

EXISTING DOUBLE CENTERLINE

PAVEMENT MARKING LEGEND

ALL PAVEMENT MARKINGS EPOXY UNLESS NOTED.

** GROOVED PREFORMED THERMOPLASTIC

- (A) CENTERLINE, 4-INCH, SOLID, YELLOW
- (B) EDGELINE, 4-INCH, YELLOW
- (C) LANE LINE, 4-INCH, WHITE
- (D) EDGELINE, 4-INCH, WHITE
- (E) CHANNELIZING LINE, 8-INCH, WHITE
- (F) DIAGONAL, 12-INCH, YELLOW
- (G) **YIELDLINE, 18-INCH, WHITE, 2' SEG/2' GAP
- (H) ISLAND NOSE, YELLOW

PROJECT NO:1500-32-71	HWY:USH 10	COUNTY:CALUMET	PAVEMENT MARKING - STH 32/57	SHEET 54	E

2

CEMETERY ROAD
SEE SDD 15C-3 "BARRICADES AND SIGNS FOR SIDE ROAD CLOSURES" DETAIL 1

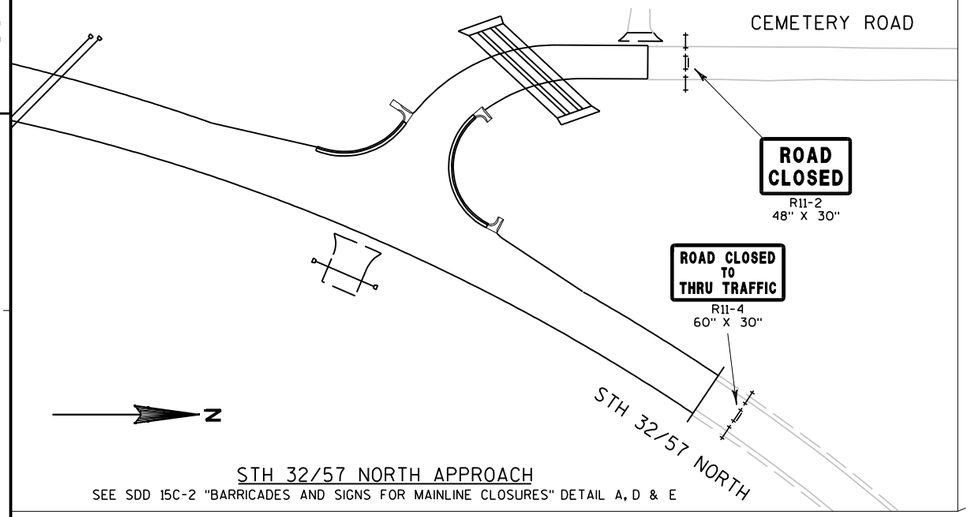

STH 32/57 NORTH APPROACH
SEE SDD 15C-2 "BARRICADES AND SIGNS FOR MAINLINE CLOSURES" DETAIL A, D & E

KELLER STREET
SEE SDD 15C-3 "BARRICADES AND SIGNS FOR SIDE ROAD CLOSURES" DETAIL 1

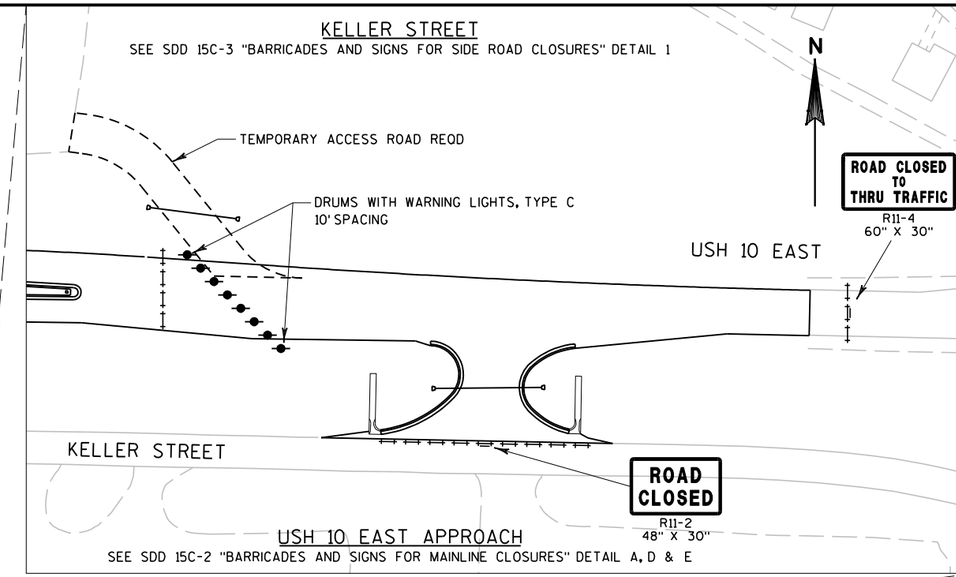

USH 10 EAST APPROACH
SEE SDD 15C-2 "BARRICADES AND SIGNS FOR MAINLINE CLOSURES" DETAIL A, D & E

2

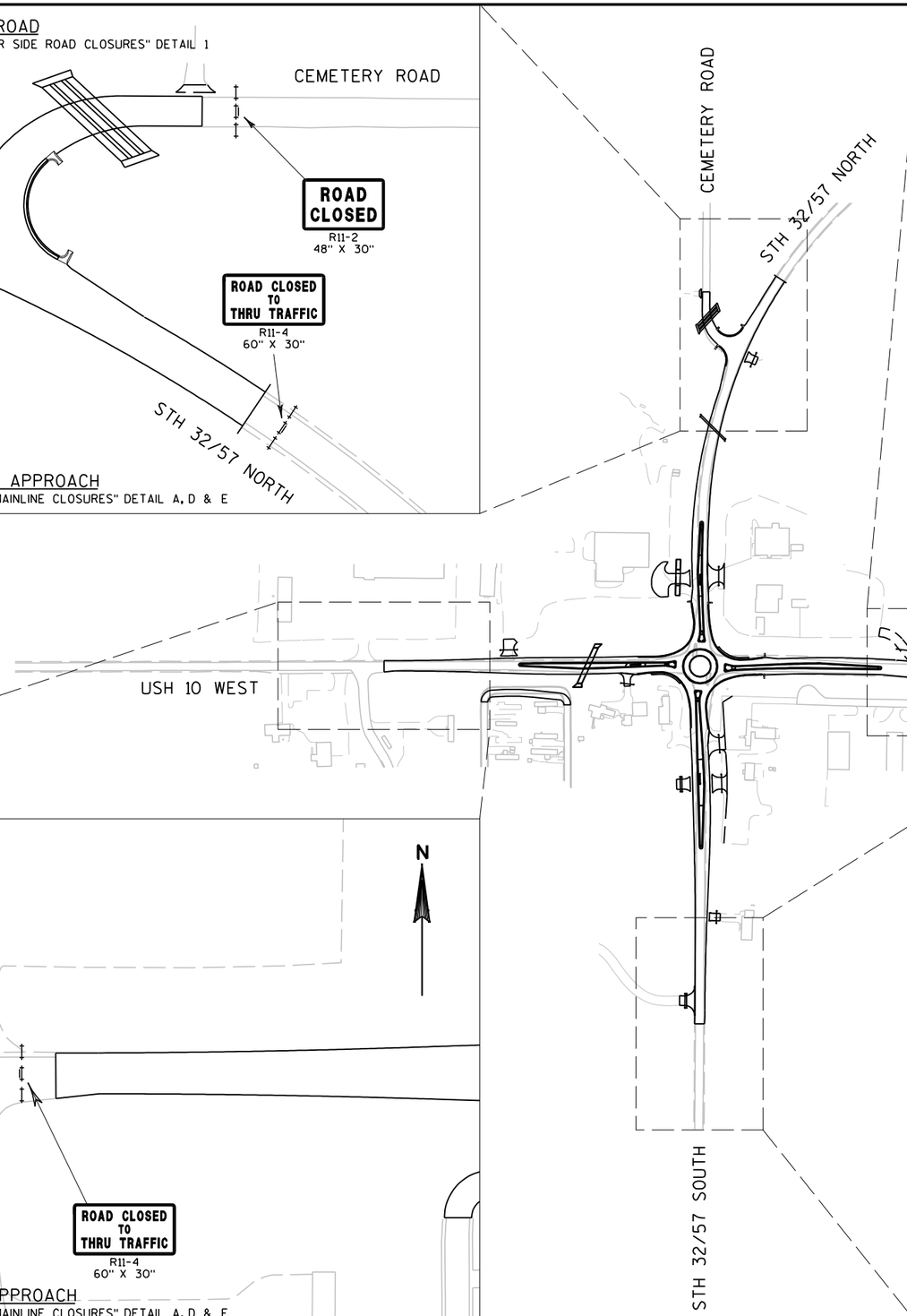

SHADY LANE
SEE SDD 15C-3 "BARRICADES AND SIGNS FOR SIDE ROAD CLOSURES" DETAIL 4

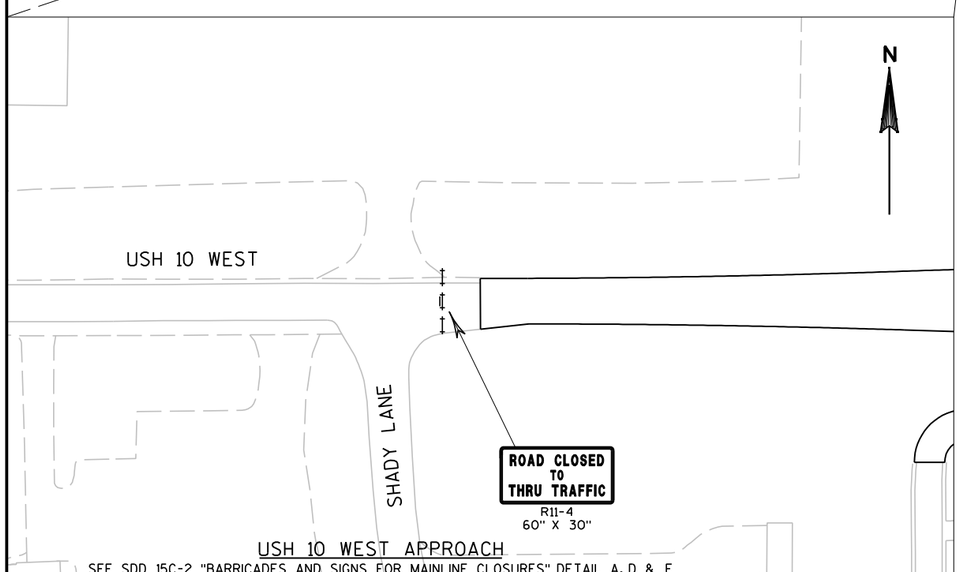

USH 10 WEST APPROACH
SEE SDD 15C-2 "BARRICADES AND SIGNS FOR MAINLINE CLOSURES" DETAIL A, D & E

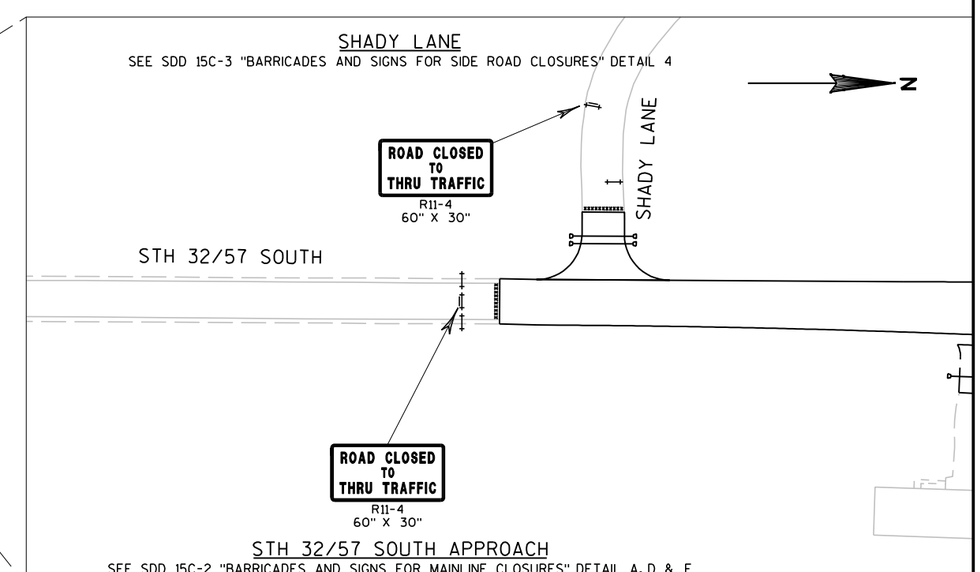

STH 32/57 SOUTH APPROACH
SEE SDD 15C-2 "BARRICADES AND SIGNS FOR MAINLINE CLOSURES" DETAIL A, D & E

PROJECT NO:1500-32-71	HWY:USH 10	COUNTY:CALUMET	TRAFFIC CONTROL PLAN	SHEET 55	E

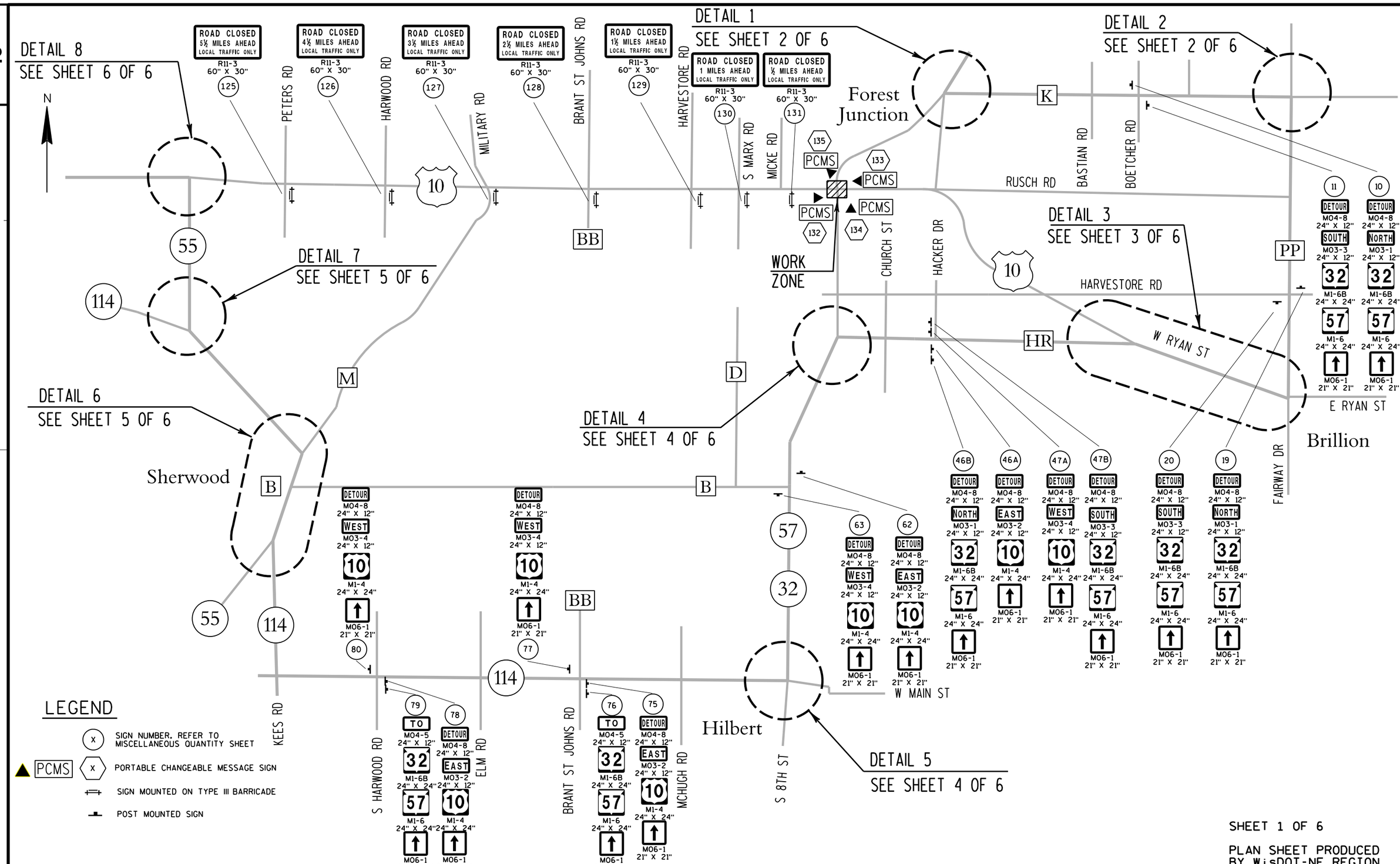

PROJECT NO:1500-32-71	HWY:USH 10	COUNTY:CALUMET	DETOUR SIGNING DETAIL	SHEET 56	E

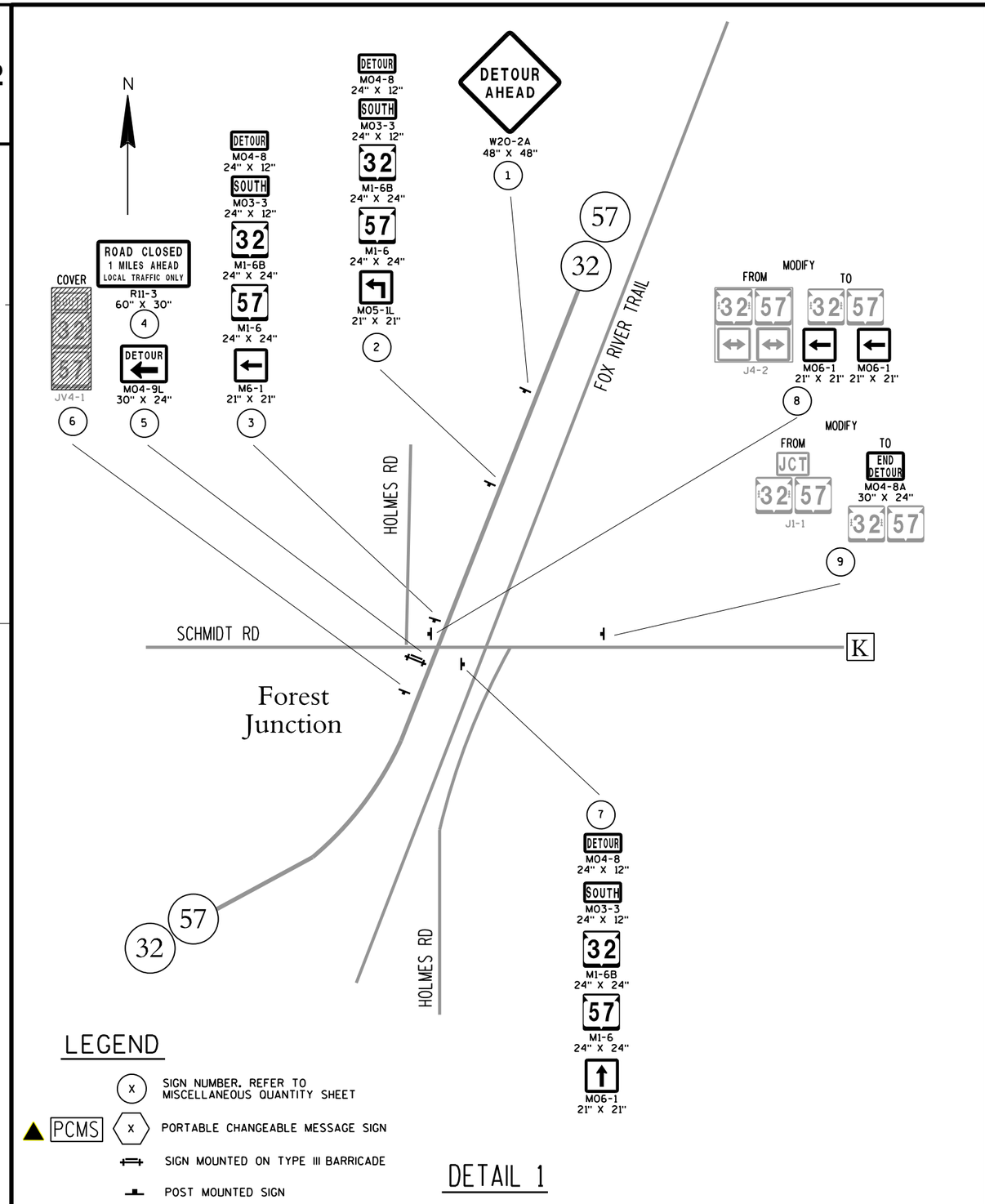

DETAIL 1

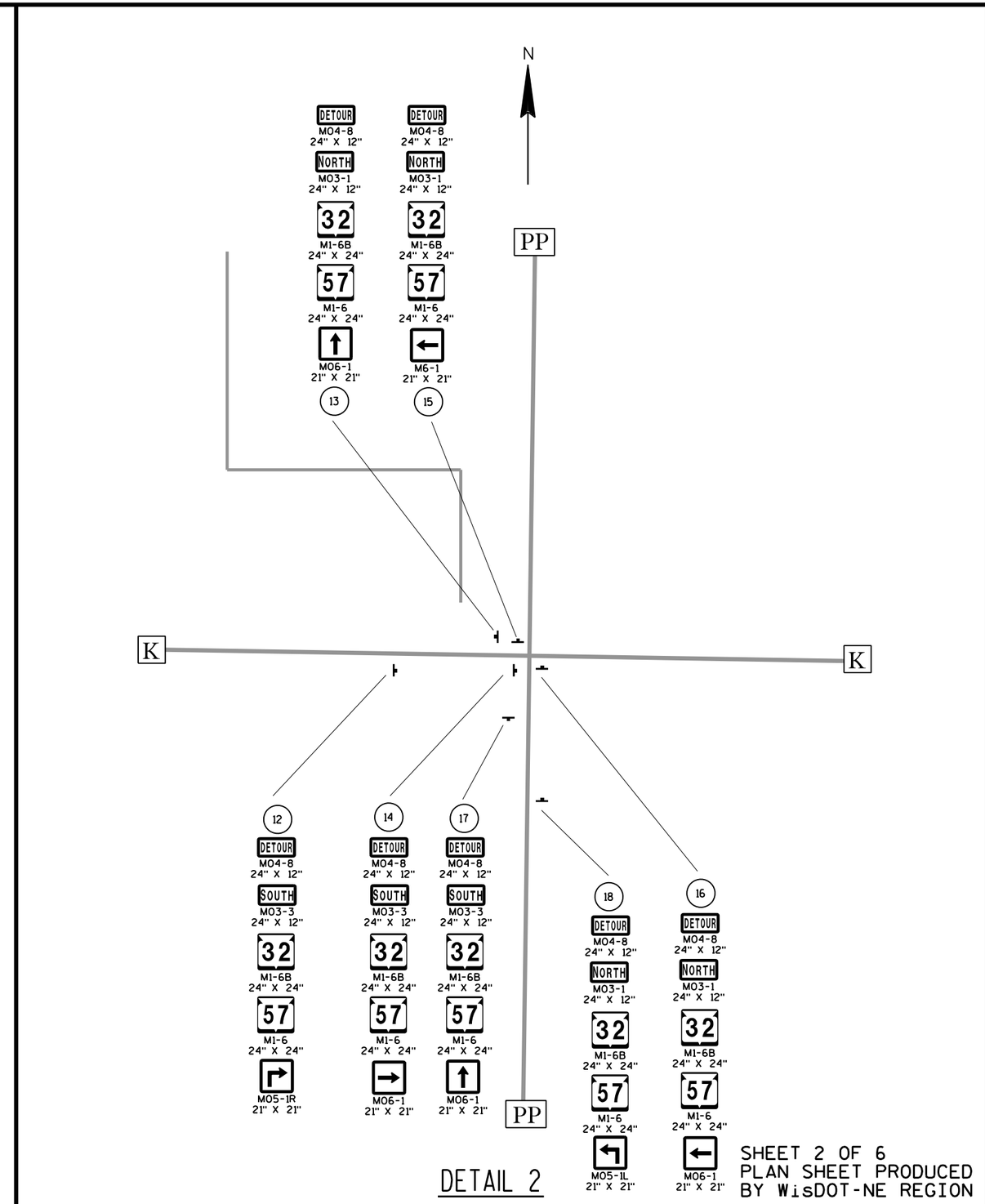

DETAIL 2

SHEET 2 OF 6
PLAN SHEET PRODUCED
BY WisDOT-NE REGION

PROJECT NO:1500-32-71	HWY:USH 10	COUNTY:CALUMET	DETOUR SIGNING DETAIL	SHEET 57	E

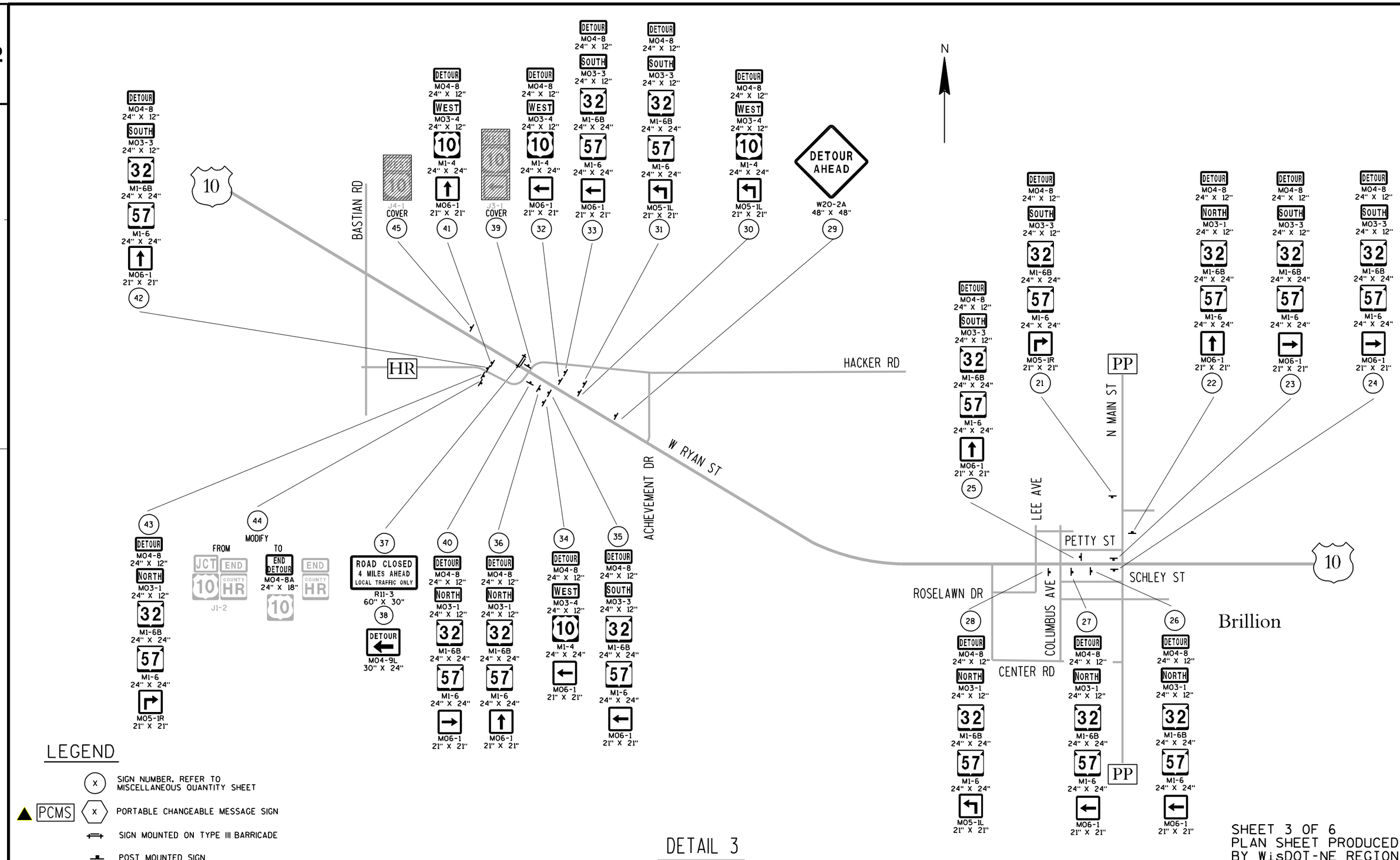

DETAIL 3

SHEET 3 OF 6
PLAN SHEET PRODUCED
BY WisDOT-NE REGION

PROJECT NO:1500-32-71	HWY:USH 10	COUNTY:CALUMET	DETOUR SIGNING DETAIL	SHEET 58	E

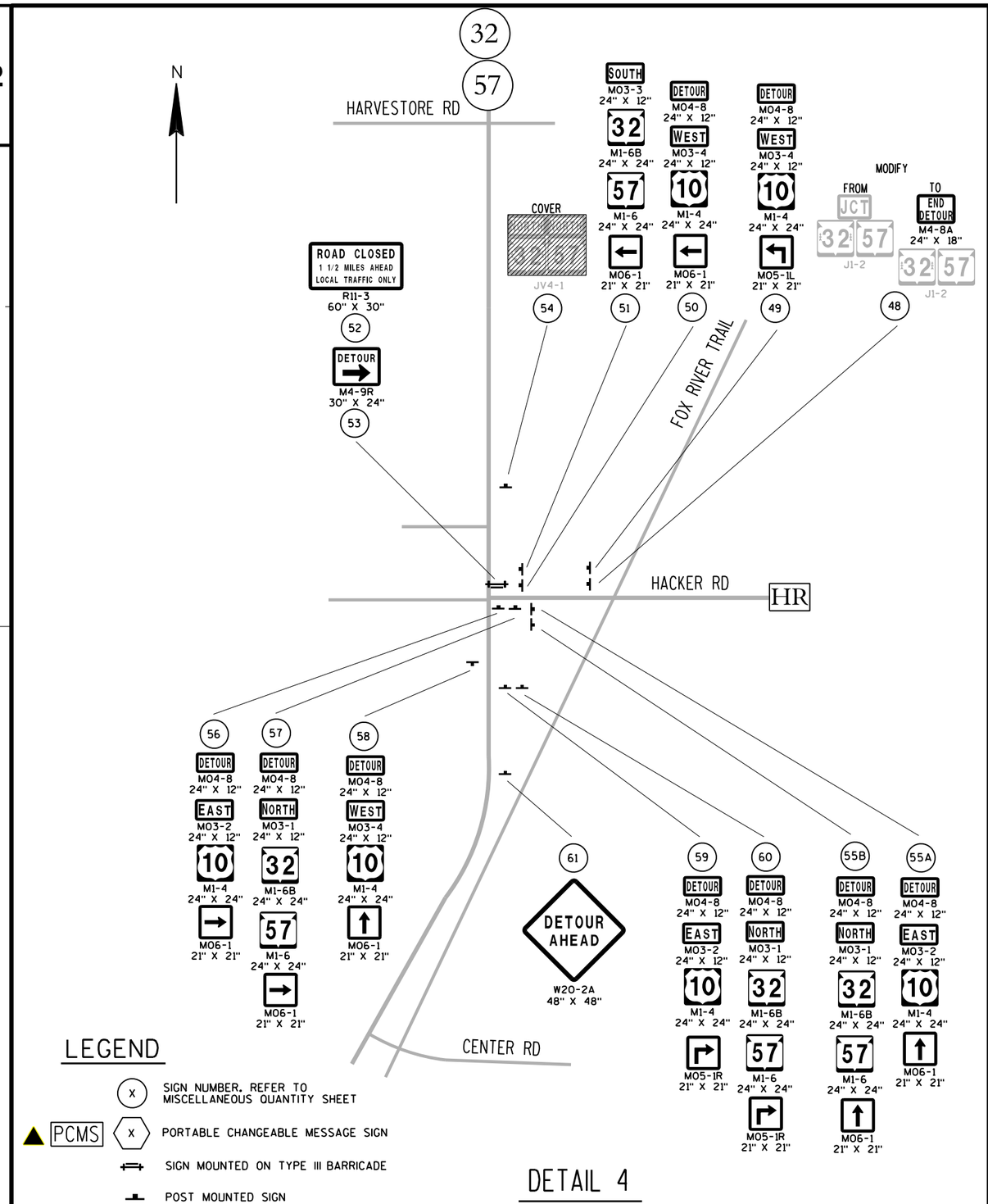

DETAIL 4

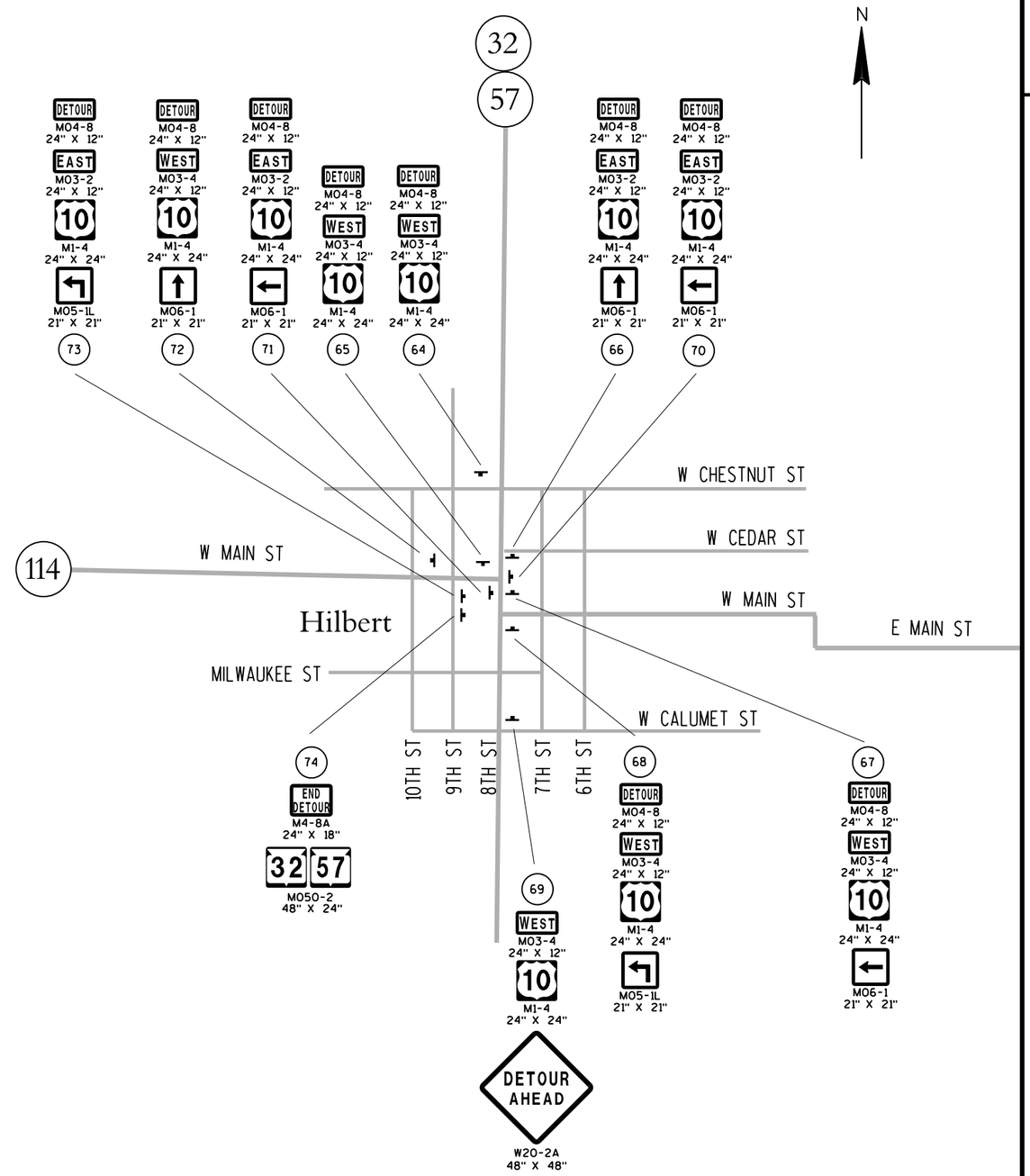

DETAIL 5

SHEET 4 OF 6
PLAN SHEET PRODUCED
BY WisDOT-NE REGION

PROJECT NO:1500-32-71	HWY:USH 10	COUNTY:CALUMET	DETOUR SIGNING DETAIL	SHEET 59	E

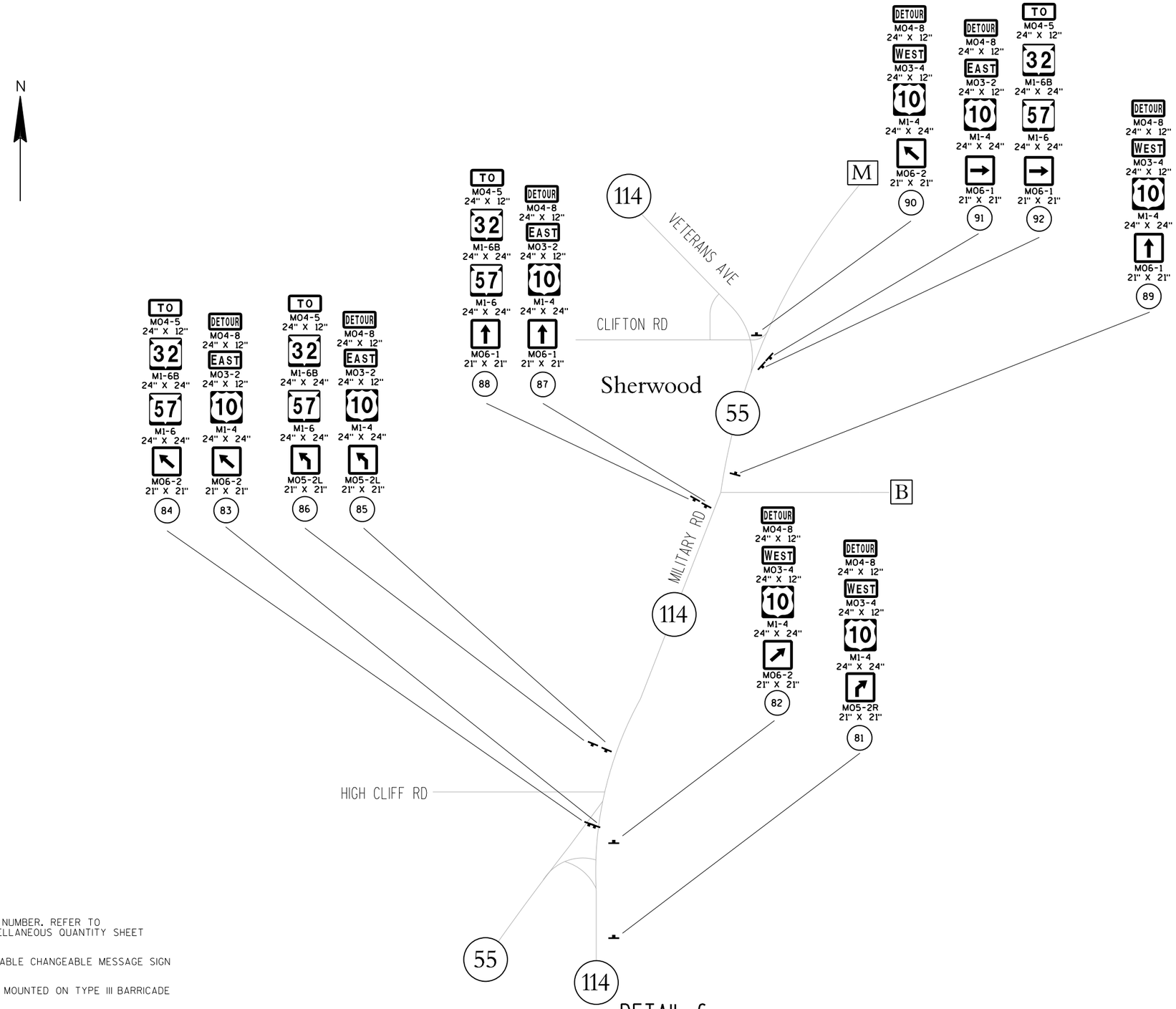

LEGEND

- (X) SIGN NUMBER. REFER TO MISCELLANEOUS QUANTITY SHEET
- ▲ PCMS (X) PORTABLE CHANGEABLE MESSAGE SIGN
- SIGN MOUNTED ON TYPE III BARRICADE
- POST MOUNTED SIGN

DETAIL 6

SHEET 5 OF 6
PLAN SHEET PRODUCED
BY WisDOT-NE REGION

PROJECT NO:1500-32-71	HWY:USH 10	COUNTY:CALUMET	DETOUR SIGNING DETAIL	SHEET 60	E

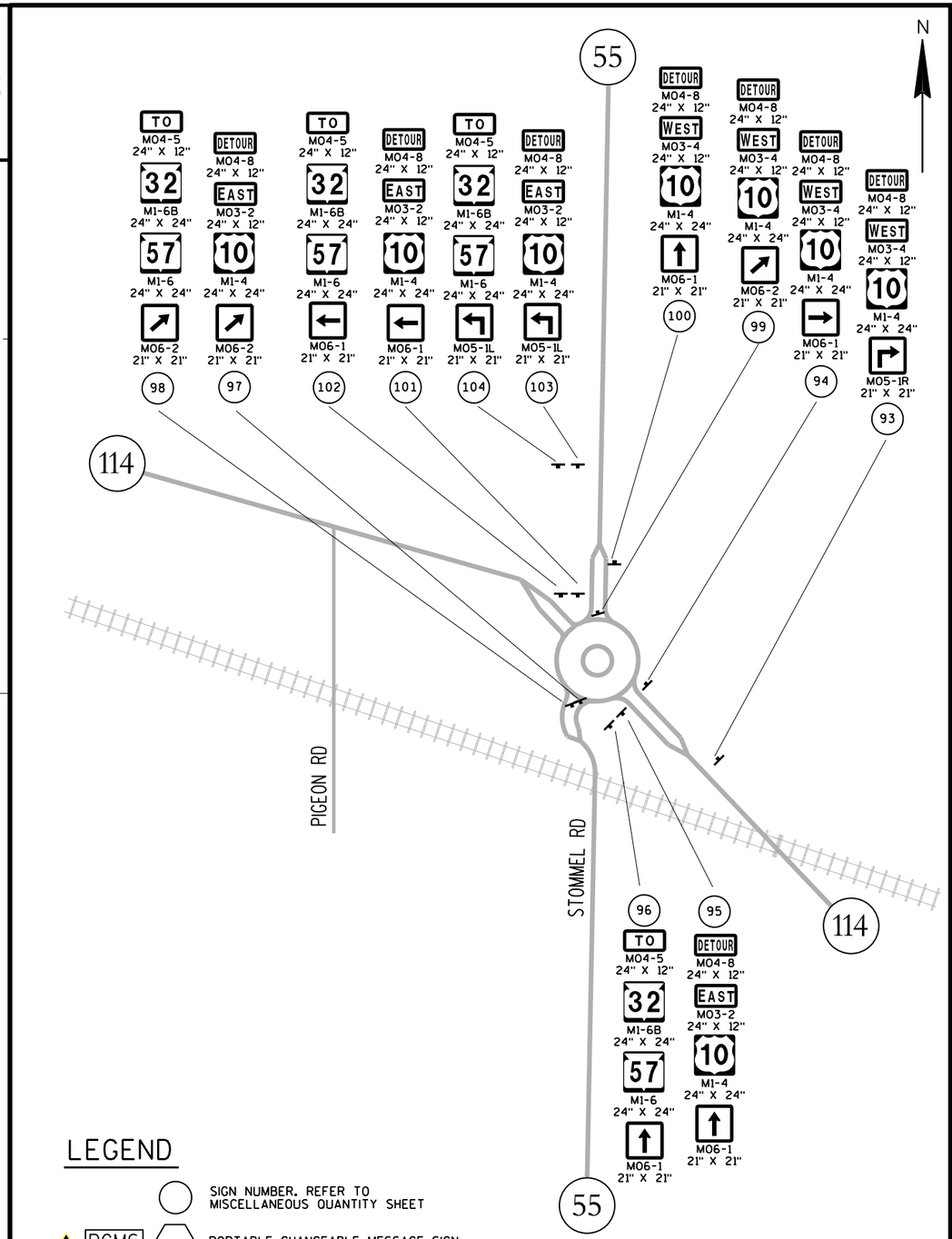

LEGEND

- SIGN NUMBER. REFER TO MISCELLANEOUS QUANTITY SHEET
- PCMS — PORTABLE CHANGEABLE MESSAGE SIGN
- SIGN MOUNTED ON TYPE III BARRICADE
- POST MOUNTED SIGN

DETAIL 7

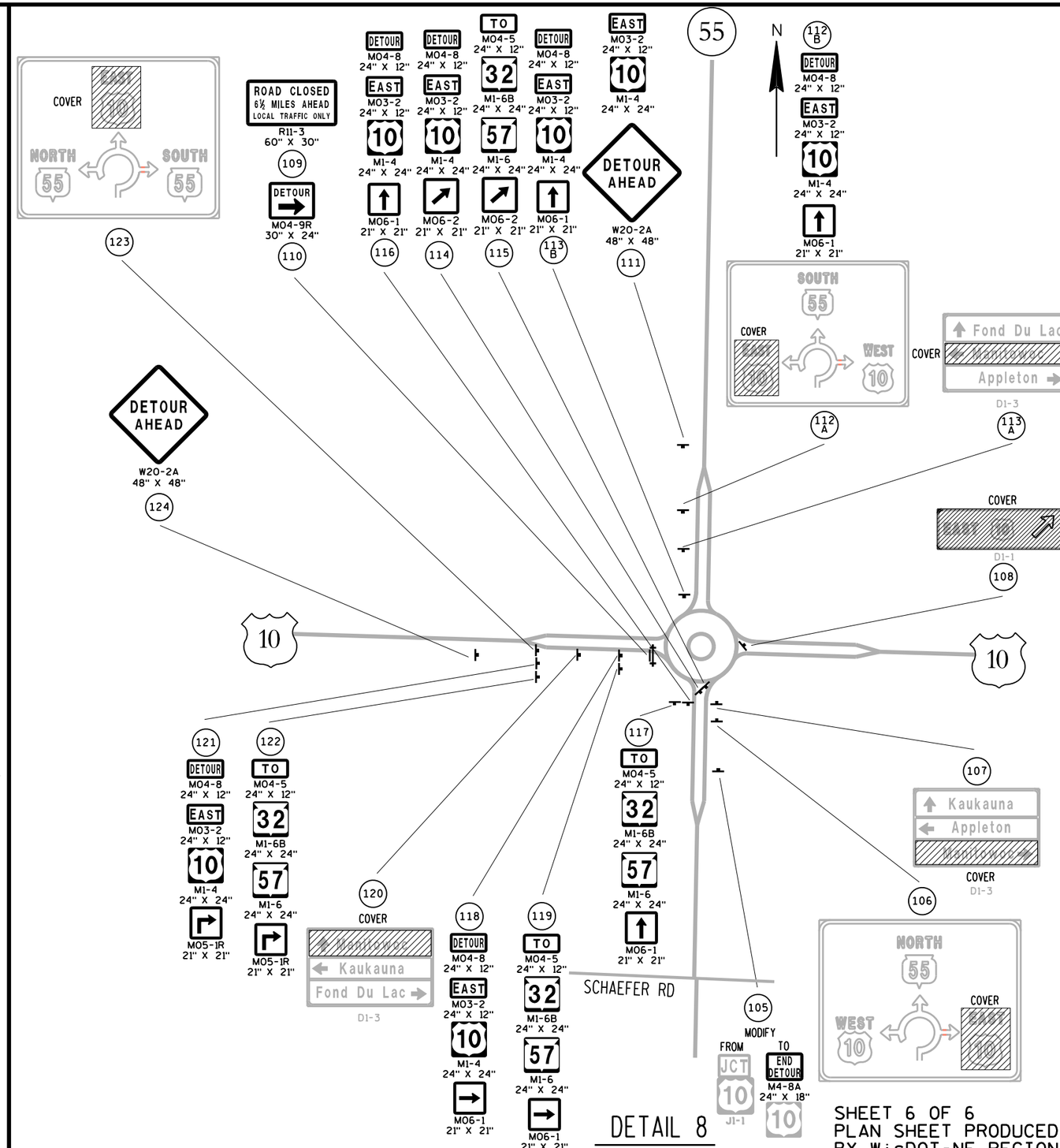

DETAIL 8

SHEET 6 OF 6
PLAN SHEET PRODUCED BY WisDOT-NE REGION

PROJECT NO:1500-32-71	HWY:USH 10	COUNTY:CALUMET	DETOUR SIGNING DETAIL	SHEET 61	E

2

USH 10 WEST WESTBOUND (WB) R/L

ITEM	POINT	STATION	NORTHING	EASTING	DIRECTION	DISTANCE	DELTA ANGLE	° CURVE - ARC	TANGENT	ARC LENGTH	RADIUS
	BOP	110+00.00	544418.013	892710.512	N89°48'18"E	157.057					
	PC	110+31.37	544418.120	892741.877							
C21	RADIUS	N/A	552418.074	892714.645			01°48'01"	00°42'58"	125.691	251.362	8000.000
	PI	111+57.06	544418.548	892867.568							
	PRC	112+82.73	544422.924	892993.183	N88°00'17"E	245.122					
C22	RADIUS	N/A	536427.775	893271.721			01°42'38"	00°42'58"	119.431	238.844	8000.000
	PI	114+02.16	544427.082	893112.542							
	PT	115+21.57	544427.676	893231.971	N89°42'55"E	444.014					
	PC	118+27.86	544429.198	893538.259							
C23	RADIUS	N/A	544538.703	893537.715			18°57'56"	52°19'18"	18.291	36.248	109.507
	PI	118+46.16	544429.289	893556.550	N70°44'59"E	18.291					
	PT/EOP	118+64.11	544435.319	893573.819							

PEACH TREE LN/JUNIPER DR (PTJ) R/L

ITEM	POINT	STATION	NORTHING	EASTING	DIRECTION	DISTANCE	DELTA ANGLE	° CURVE - ARC	TANGENT	ARC LENGTH	RADIUS
	BOP	0+92.44	544119.517	893007.427	N00°08'01"W	192.170					
	PC	2+84.61	544311.686	893006.979							
C101	RADIUS	N/A	544311.745	893031.979			88°04'47"	229°10'59"	24.176	38.432	25.000
	PI	3+08.78	544335.862	893006.923							
	PT	3+23.04	544336.728	893031.083	N87°56'46"E	39.701					
	PC	3+62.74	544338.151	893070.758							
C102	RADIUS	N/A	543749.530	893091.868			07°37'10"	09°43'39"	39.222	78.328	589.000
	PI	4+01.96	544339.557	893109.955							
	PT	4+41.07	544335.753	893148.990	S84°26'04"E	79.705					
	PC	5+20.78	544328.023	893228.319							
C103	RADIUS	N/A	544303.141	893225.894			84°18'03"	229°10'59"	22.629	36.783	25.000
	PI	5+43.40	544325.829	893250.841							
	PT	5+57.56	544303.199	893250.894	S00°08'01"E	229.230					
	EOP	7+86.79	544073.970	893251.429							

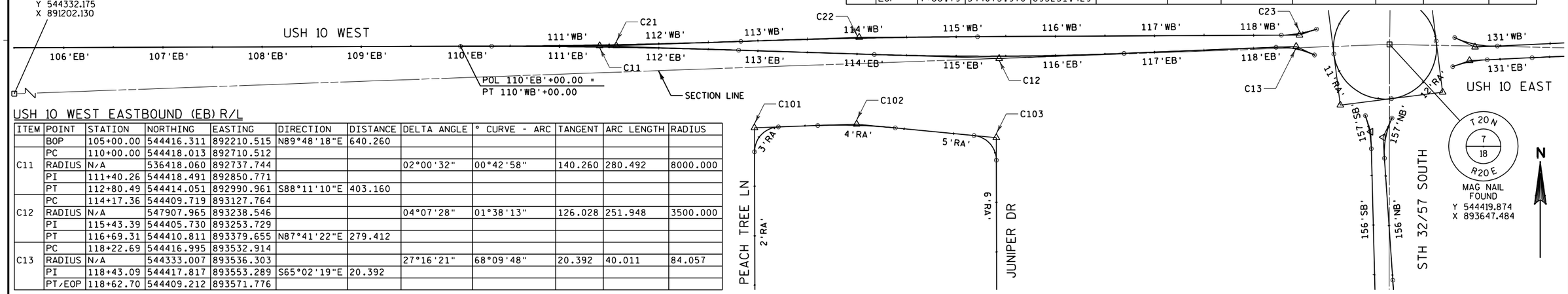

USH 10 WEST EASTBOUND (EB) R/L

ITEM	POINT	STATION	NORTHING	EASTING	DIRECTION	DISTANCE	DELTA ANGLE	° CURVE - ARC	TANGENT	ARC LENGTH	RADIUS
	BOP	105+00.00	544416.311	892210.515	N89°48'18"E	640.260					
	PC	110+00.00	544418.013	892710.512							
C11	RADIUS	N/A	536418.060	892737.744			02°00'32"	00°42'58"	140.260	280.492	8000.000
	PI	111+40.26	544418.491	892850.771							
	PT	112+80.49	544414.051	892990.961	S88°11'10"E	403.160					
	PC	114+17.36	544409.719	893127.764							
C12	RADIUS	N/A	547907.965	893238.546			04°07'28"	01°38'13"	126.028	251.948	3500.000
	PI	115+43.39	544405.730	893253.729							
	PT	116+69.31	544410.811	893379.655	N87°41'22"E	279.412					
	PC	118+22.69	544416.995	893532.914							
C13	RADIUS	N/A	544333.007	893536.303			27°16'21"	68°09'48"	20.392	40.011	84.057
	PI	118+43.09	544417.817	893553.289	S65°02'19"E	20.392					
	PT/EOP	118+62.70	544409.212	893571.776							

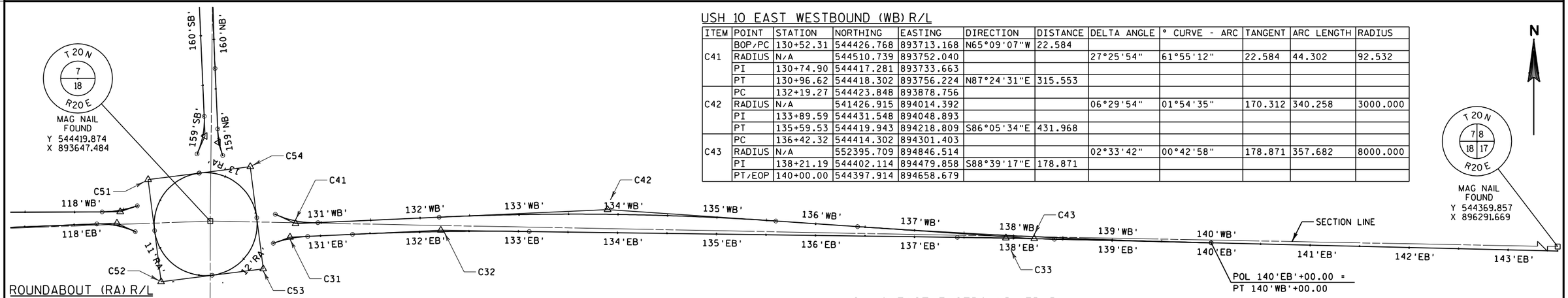

USH 10 EAST WESTBOUND (WB) R/L

ITEM	POINT	STATION	NORTHING	EASTING	DIRECTION	DISTANCE	DELTA ANGLE	° CURVE - ARC	TANGENT	ARC LENGTH	RADIUS
	BOP/PC	130+52.31	544426.768	893713.168	N65°09'07"W	22.584					
C41	RADIUS	N/A	544510.739	893752.040			27°25'54"	61°55'12"	22.584	44.302	92.532
	PI	130+74.90	544417.281	893733.663							
	PT	130+96.62	544418.302	893756.224	N87°24'31"E	315.553					
	PC	132+19.27	544423.848	893878.756							
C42	RADIUS	N/A	541426.915	894014.392			06°29'54"	01°54'35"	170.312	340.258	3000.000
	PI	133+89.59	544431.548	894048.893							
	PT	135+59.53	544419.943	894218.809	S86°05'34"E	431.968					
	PC	136+42.32	544414.302	894301.403							
C43	RADIUS	N/A	552395.709	894846.514			02°33'42"	00°42'58"	178.871	357.682	8000.000
	PI	138+21.19	544402.114	894479.858	S88°39'17"E	178.871					
	PT/EOP	140+00.00	544397.914	894658.679							

ROUNDABOUT (RA) R/L

ITEM	POINT	STATION	NORTHING	EASTING	DIRECTION	DELTA ANGLE	° CURVE - ARC	TANGENT	ARC LENGTH	RADIUS
	BOP/PC	10+00.00	544468.372	893636.356	S83°00'29"W					
C51	RADIUS	N/A	544416.782	893642.874		90°00'00"	110°11'03"	52.000	81.681	52.000
	PI	10+52.00	544461.854	893584.767						
	PCC	10+81.68	544410.264	893591.284	S07°14'13"E					
C52	RADIUS	N/A	544416.782	893642.874		90°00'00"	110°11'03"	52.000	81.681	52.000
	PI	11+33.68	544358.674	893597.802						
	PCC	11+63.36	544365.192	893649.392	N82°05'34"E					
C53	RADIUS	N/A	544416.782	893642.874		90°00'00"	110°11'03"	52.000	81.681	52.000
	PI	12+15.36	544371.710	893700.982						
	PCC	12+45.04	544423.299	893694.464	N07°14'13"W					
C54	RADIUS	N/A	544416.782	893642.874		90°00'00"	110°11'03"	52.000	81.681	52.000
	PI	12+97.04	544474.889	893687.946						
	PT/EOP	13+26.73	544468.372	893636.356	N82°34'07"E					

USH 10 EAST EASTBOUND (EB) R/L

ITEM	POINT	STATION	NORTHING	EASTING	DIRECTION	DISTANCE	DELTA ANGLE	° CURVE - ARC	TANGENT	ARC LENGTH	RADIUS
	BOP/PC	130+51.51	544397.507	893711.208	N70°06'46"E	17.894					
C31	RADIUS	N/A	544286.626	893751.318			17°15'31"	48°35'30"	17.894	35.517	117.913
	PI	130+69.41	544403.594	893728.035							
	PT	130+87.03	544404.414	893745.910	N87°22'17"E	152.580					
	PC	131+32.36	544406.493	893791.194							
C32	RADIUS	N/A	541409.650	893928.780			03°24'44"	01°54'35"	89.355	178.657	3000.000
	PI	132+21.72	544410.591	893880.455							
	PT	133+11.02	544409.370	893969.801	S89°13'00"E	570.837					
	PC	137+43.46	544403.457	894402.205							
C33	RADIUS	N/A	534404.391	894265.469			00°33'43"	00°34'23"	49.038	98.075	10000.000
	PI	137+92.50	544402.786	894451.238							
	PT	138+41.54	544401.635	894500.263	S88°39'17"E	207.499					

2

STH 32/57 SOUTH SOUTHBOUND (SB) R/L

ITEM	POINT	STATION	NORTHING	EASTING	DIRECTION	DISTANCE	DELTA ANGLE	° CURVE - ARC	TANGENT	ARC LENGTH	RADIUS
	BOP	147+64.98	543402.960	893641.708	N00°19'44"E	355.368					
	PC	149+91.56	543629.532	893643.008							
C71	RADIUS	N/A	543675.441	885643.140			01°50'41"	00°42'58"	128.792	257.562	8000.000
	PI	151+20.35	543758.322	893643.747							
	PT	152+49.12	543887.069	893640.340	N01°30'57"W	573.762					
	PC	156+77.01	544314.812	893629.021							
C72	RADIUS	N/A	544311.808	893515.517			17°06'24"	50°27'42"	17.077	33.900	113.543
	PI	156+94.09	544331.883	893628.569	N18°37'21"W	17.077					
	PT/EOP	157+10.91	544348.066	893623.116							

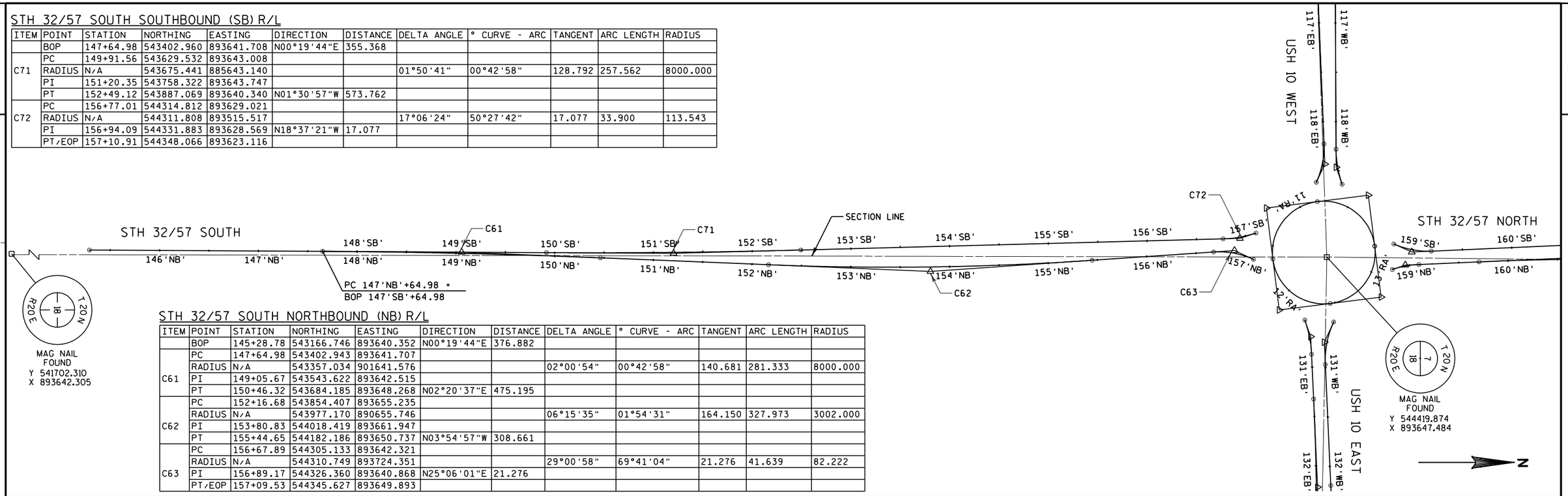

STH 32/57 SOUTH NORTHBOUND (NB) R/L

ITEM	POINT	STATION	NORTHING	EASTING	DIRECTION	DISTANCE	DELTA ANGLE	° CURVE - ARC	TANGENT	ARC LENGTH	RADIUS
	BOP	145+28.78	543166.746	893640.352	N00°19'44"E	376.882					
	PC	147+64.98	543402.943	893641.707							
	RADIUS	N/A	543357.034	901641.576			02°00'54"	00°42'58"	140.681	281.333	8000.000
C61	PI	149+05.67	543543.622	893642.515							
	PT	150+46.32	543684.185	893648.268	N02°20'37"E	475.195					
	PC	152+16.68	543854.407	893655.235							
	RADIUS	N/A	543977.170	890655.746			06°15'35"	01°54'31"	164.150	327.973	3002.000
C62	PI	153+80.83	544018.419	893661.947							
	PT	155+44.65	544182.186	893650.737	N03°54'57"W	308.661					
	PC	156+67.89	544305.133	893642.321							
	RADIUS	N/A	544310.749	893724.351			29°00'58"	69°41'04"	21.276	41.639	82.222
C63	PI	156+89.17	544326.360	893640.868	N25°06'01"E	21.276					
	PT/EOP	157+09.53	544345.627	893649.893							

STH 32/57 NORTH SOUTHBOUND (SB) R/L

ITEM	POINT	STATION	NORTHING	EASTING	DIRECTION	DISTANCE	DELTA ANGLE	° CURVE - ARC	TANGENT	ARC LENGTH	RADIUS
	BOP/PC	158+79.58	544487.756	893634.216	N24°04'16"E	19.826					
C91	RADIUS	N/A	544522.008	893557.540			26°33'58"	68°13'36"	19.826	38.938	83.979
	PI	158+99.40	544505.857	893642.302							
	PT	159+18.51	544525.664	893641.439	N02°29'43"W	152.608					
	PC	160+71.12	544678.127	893634.795							
C92	RADIUS	N/A	544743.429	895133.373			10°47'53"	03°49'11"	141.764	282.689	1500.000
	PI	162+12.89	544819.757	893628.623							
	PCC	163+53.81	544960.036	893649.095	N08°18'10"E	470.314					
C93	RADIUS	N/A	544750.649	895083.897			25°32'01"	03°57'05"	328.550	646.189	1450.000
	PI	166+82.36	545285.142	893696.539	N33°50'11"E	328.550					
	PT/EOP	170+00.00	545558.045	893879.484							

CEMETERY ROAD (CEM) R/L

ITEM	POINT	STATION	NORTHING	EASTING	DIRECTION	DISTANCE	DELTA ANGLE	° CURVE - ARC	TANGENT	ARC LENGTH	RADIUS
	BOP	10+00.00	545347.613	893763.990	N65°39'50"W	114.657					
	PC	10+49.69	545368.089	893718.717							
C201	RADIUS	N/A	545459.203	893759.926			66°01'18"	57°17'45"	64.968	115.230	100.000
	PI	11+14.66	545394.862	893659.522							
	PT	11+64.92	545459.828	893659.928	N00°21'29"E	210.005					
	EOP	13+74.92	545669.829	893661.239							

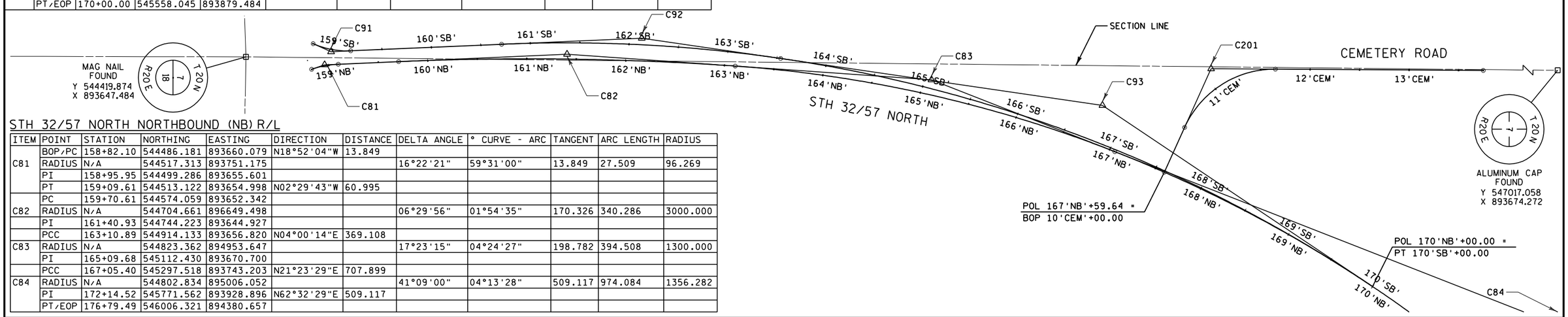

STH 32/57 NORTH NORTHBOUND (NB) R/L

ITEM	POINT	STATION	NORTHING	EASTING	DIRECTION	DISTANCE	DELTA ANGLE	° CURVE - ARC	TANGENT	ARC LENGTH	RADIUS
	BOP/PC	158+82.10	544486.181	893660.079	N18°52'04"W	13.849					
C81	RADIUS	N/A	544517.313	893751.175			16°22'21"	59°31'00"	13.849	27.509	96.269
	PI	158+95.95	544499.286	893655.601							
	PT	159+09.61	544513.122	893654.998	N02°29'43"W	60.995					
	PC	159+70.61	544574.059	893652.342							
C82	RADIUS	N/A	544704.661	896649.498			06°29'56"	01°54'35"	170.326	340.286	3000.000
	PI	161+40.93	544744.223	893644.927							
	PCC	163+10.89	544914.133	893656.820	N04°00'14"E	369.108					
C83	RADIUS	N/A	544823.362	894953.647			17°23'15"	04°24'27"	198.782	394.508	1300.000
	PI	165+09.68	545112.430	893670.700							
	PCC	167+05.40	545297.518	893743.203	N21°23'29"E	707.899					
C84	RADIUS	N/A	544802.834	895006.052			41°09'00"	04°13'28"	509.117	974.084	1356.282
	PI	172+14.52	545771.562	893928.896	N62°32'29"E	509.117					
	PT/EOP	176+79.49	546006.321	894380.657							

PROJECT NO:1500-32-71	HWY:USH 10	COUNTY:CALUMET/OUTAGAMIE	ALIGNMENT DETAIL	SHEET 63	E

3

DATE 18JUN13 E S T I M A T E O F Q U A N T I T I E S

LINE NUMBER	ITEM	ITEM DESCRIPTION	UNIT	TOTAL	1500-32-71 QUANTITY
0010	201.0105	CLEARING	STA	5.000	5.000
0020	201.0120	CLEARING	ID	10.000	10.000
0030	201.0205	GRUBBING	STA	5.000	5.000
0040	201.0220	GRUBBING	ID	10.000	10.000
0050	203.0100	REMOVING SMALL PIPE CULVERTS	EACH	24.000	24.000
0060	203.0200	REMOVING OLD STRUCTURE (STATION) 01. STA 115 'WB' +65	LS	1.000	1.000
0070	203.0200	REMOVING OLD STRUCTURE (STATION) 01. STA 160 'NB' + 35	LS	1.000	1.000
0080	204.0100	REMOVING PAVEMENT **P**	SY	2,950.000	2,950.000
0090	204.0150	REMOVING CURB & GUTTER **P**	LF	350.000	350.000
0100	204.0155	REMOVING CONCRETE SIDEWALK **P**	SY	45.000	45.000
0110	204.0170	REMOVING FENCE	LF	75.000	75.000
0120	204.0195	REMOVING CONCRETE BASES	EACH	9.000	9.000
0130	204.0220	REMOVING INLETS	EACH	1.000	1.000
0140	204.0235	REMOVING BUILDINGS (PARCEL) 01. PARCEL 7	LS	1.000	1.000
0150	204.0240	SITE CLEARANCE (PARCEL) 01. PARCEL 7	LS	1.000	1.000
0160	205.0100	EXCAVATION COMMON **P**	CY	23,400.000	23,400.000
0170	206.2000	EXCAVATION FOR STRUCTURES CULVERTS (STRUCTURE) 01. C-8-76	LS	1.000	1.000
0180	206.2000	EXCAVATION FOR STRUCTURES CULVERTS (STRUCTURE) 01. C-8-77	LS	1.000	1.000
0190	210.0100	BACKFILL STRUCTURE	CY	1,260.000	1,260.000
0200	213.0100	FINISHING ROADWAY (PROJECT) 01. 1500-32-71	EACH	1.000	1.000
0210	305.0110	BASE AGGREGATE DENSE 3/4-INCH	TON	3,000.000	3,000.000
0220	305.0120	BASE AGGREGATE DENSE 1 1/4-INCH	TON	26,000.000	26,000.000
0230	311.0110	BREAKER RUN	TON	21,600.000	21,600.000
0240	311.0115	BREAKER RUN	CY	115.000	115.000
0250	405.0100	COLORING CONCRETE RED	CY	330.000	330.000
0260	415.0080	CONCRETE PAVEMENT 8-INCH	SY	110.000	110.000
0270	416.0512	CONCRETE ROUNDABOUT TRUCK APRON 12-INCH **P**	SY	480.000	480.000
0280	455.0115	ASPHALTIC MATERIAL PG64-22	TON	255.000	255.000
0290	455.0120	ASPHALTIC MATERIAL PG64-28	TON	110.000	110.000
0300	455.0605	TACK COAT	GAL	900.000	900.000
0310	460.1100	HMA PAVEMENT TYPE E-0.3	TON	245.000	245.000
0320	460.1110	HMA PAVEMENT TYPE E-10	TON	6,350.000	6,350.000
0330	460.2000	INCENTIVE DENSITY HMA PAVEMENT	DOL	4,221.000	4,221.000
0340	460.4100.S	REHEATING HMA LONGITUDINAL JOINTS	STA	26.000	26.000
0350	465.0120	ASPHALTIC SURFACE DRIVEWAYS AND FIELD ENTRANCES **P**	TON	241.000	241.000
0360	465.0315	ASPHALTIC FLUMES	SY	90.000	90.000
0370	504.0100	CONCRETE MASONRY CULVERTS	CY	323.000	323.000
0380	504.0900	CONCRETE MASONRY ENDWALLS	CY	9.000	9.000
0390	505.0410	BAR STEEL REINFORCEMENT HS CULVERTS	LB	18,020.000	18,020.000
0400	505.0610	BAR STEEL REINFORCEMENT HS COATED CULVERTS	LB	16,970.000	16,970.000
0410	516.0500	RUBBERIZED MEMBRANE WATERPROOFING	SY	55.000	55.000
0420	520.4012	CULVERT PIPE TEMPORARY 12-INCH	LF	58.000	58.000
0430	521.0118	CULVERT PIPE CORRUGATED STEEL 18-INCH	LF	46.000	46.000
0440	521.0124	CULVERT PIPE CORRUGATED STEEL 24-INCH	LF	276.000	276.000
0450	521.0130	CULVERT PIPE CORRUGATED STEEL 30-INCH	LF	228.000	228.000
0460	521.0764	PIPE ARCH CORRUGATED STEEL 64X43-INCH	LF	246.000	246.000

3

DATE 18JUN13 E S T I M A T E O F Q U A N T I T I E S

LINE NUMBER	ITEM	ITEM DESCRIPTION	UNIT	TOTAL	1500-32-71 QUANTITY
0470	521.1012	APRON ENDWALLS FOR CULVERT PIPE STEEL 12-INCH	EACH	2.000	2.000
0480	521.1018	APRON ENDWALLS FOR CULVERT PIPE STEEL 18-INCH	EACH	2.000	2.000
0490	521.1024	APRON ENDWALLS FOR CULVERT PIPE STEEL 24-INCH	EACH	8.000	8.000
0500	521.1524	APRON ENDWALLS FOR CULVERT PIPE SLOPED SIDE DRAINS STEEL 24-INCH 6 TO 1	EACH	4.000	4.000
0510	521.1530	APRON ENDWALLS FOR CULVERT PIPE SLOPED SIDE DRAINS STEEL 30-INCH 6 TO 1	EACH	10.000	10.000
0520	522.1012	APRON ENDWALLS FOR CULVERT PIPE REINFORCED CONCRETE 12-INCH	EACH	14.000	14.000
0530	522.1036	APRON ENDWALLS FOR CULVERT PIPE REINFORCED CONCRETE 36-INCH	EACH	4.000	4.000
0540	523.0424	CULVERT PIPE REINFORCED CONCRETE HORIZONTAL ELLIPTICAL CLASS HE-IV 24X38-INCH	LF	228.000	228.000
0550	523.0524	APRON ENDWALLS FOR CULVERT PIPE REINFORCED CONCRETE HORIZONTAL ELLIPTICAL 24X38-INCH	EACH	4.000	4.000
0560	601.0405	CONCRETE CURB & GUTTER 18-INCH TYPE A **P**	LF	195.000	195.000
0570	601.0411	CONCRETE CURB & GUTTER 30-INCH TYPE D	LF	2,240.000	2,240.000
0580	601.0553	CONCRETE CURB AND GUTTER 4-INCH SLOPED 36-INCH TYPE D	LF	2,360.000	2,360.000
0590	601.0580	CONCRETE CURB & GUTTER 4-INCH SLOPED 36-INCH TYPE R **P**	LF	310.000	310.000
0600	601.0600	CONCRETE CURB PEDESTRIAN **P**	LF	56.000	56.000
0610	602.0405	CONCRETE SIDEWALK 4-INCH	SF	12,060.000	12,060.000
0620	602.0505	CURB RAMP DETECTABLE WARNING FIELD YELLOW **P**	SF	144.000	144.000
0630	606.0200	RIPRAP MEDIUM	CY	335.000	335.000
0640	606.0300	RIPRAP HEAVY	CY	42.000	42.000
0650	608.0412	STORM SEWER PIPE REINFORCED CONCRETE CLASS IV 12-INCH	LF	981.000	981.000
0660	608.0436	STORM SEWER PIPE REINFORCED CONCRETE CLASS IV 36-INCH	LF	244.000	244.000
0670	611.0624	INLET COVERS TYPE H	EACH	18.000	18.000
0680	611.0639	INLET COVERS TYPE H-S	EACH	10.000	10.000
0690	611.0652	INLET COVERS TYPE T	EACH	1.000	1.000
0700	611.2006	MANHOLES 6-FT DIAMETER	EACH	2.000	2.000
0710	611.3230	INLETS 2X3-FT	EACH	26.000	26.000
0720	616.0205	FENCE CHAIN LINK 5-FT	LF	144.000	144.000
0730	618.0100	MAINTENANCE AND REPAIR OF HAUL ROADS (PROJECT) 01. 1500-32-71	EACH	1.000	1.000
0740	619.1000	MOBILIZATION	EACH	1.000	1.000
0750	620.0300	CONCRETE MEDIAN SLOPED NOSE	SF	405.000	405.000
0760	621.0100	LANDMARK REFERENCE MONUMENTS	EACH	4.000	4.000
0770	624.0100	WATER	MGAL	505.000	505.000
0780	625.0105	TOPSOIL	CY	70.000	70.000
0790	625.0500	SALVAGED TOPSOIL	SY	31,100.000	31,100.000
0800	627.0200	MULCHING	SY	23,200.000	23,200.000
0810	628.1504	SILT FENCE	LF	2,460.000	2,460.000
0820	628.1520	SILT FENCE MAINTENANCE	LF	2,460.000	2,460.000
0830	628.1905	MOBILIZATIONS EROSION CONTROL	EACH	6.000	6.000
0840	628.1910	MOBILIZATIONS EMERGENCY EROSION CONTROL	EACH	2.000	2.000
0850	628.2004	EROSION MAT CLASS I TYPE B	SY	7,500.000	7,500.000

3

DATE 18JUN13 E S T I M A T E O F Q U A N T I T I E S

LINE NUMBER	ITEM	ITEM DESCRIPTION	UNIT	TOTAL	1500-32-71 QUANTITY
0860	628.2006	EROSION MAT URBAN CLASS I TYPE A	SY	830.000	830.000
0870	628.2008	EROSION MAT URBAN CLASS I TYPE B	SY	260.000	260.000
0880	628.6510	SOIL STABILIZER TYPE B	ACRE	7.000	7.000
0890	628.7015	INLET PROTECTION TYPE C	EACH	18.000	18.000
0900	628.7020	INLET PROTECTION TYPE D	EACH	11.000	11.000
0910	628.7504	TEMPORARY DITCH CHECKS	LF	150.000	150.000
0920	628.7555	CULVERT PIPE CHECKS	EACH	88.000	88.000
0930	628.7570	ROCK BAGS	EACH	200.000	200.000
0940	629.0210	FERTILIZER TYPE B	CWT	17.000	17.000
0950	630.0130	SEEDING MIXTURE NO. 30	LB	250.000	250.000
0960	630.0140	SEEDING MIXTURE NO. 40	LB	440.000	440.000
0970	630.0200	SEEDING TEMPORARY	LB	100.000	100.000
0980	632.0201	SHRUBS (SPECIES, ROOT, SIZE) 01. ROSE, RUGOSA, BALLED AND BURLAPED, 2-FT	EACH	35.000	35.000
0990	632.0201	SHRUBS (SPECIES, ROOT, SIZE) 02. JUNIPER MANEY, CONTAINER GROWN, 15" SPD	EACH	18.000	18.000
1000	632.0201	SHRUBS (SPECIES, ROOT, SIZE) 03. SERVICEBERRY APPLE, BALLED AND BURLAPED, 12-14 FT	EACH	3.000	3.000
1010	632.9101	LANDSCAPE PLANTING SURVEILLANCE AND CARE CYCLES	EACH	20.000	20.000
1020	633.5200	MARKERS CULVERT END	EACH	22.000	22.000
1030	634.0614	POSTS WOOD 4X6-INCH X 14-FT	EACH	41.000	41.000
1040	634.0616	POSTS WOOD 4X6-INCH X 16-FT	EACH	17.000	17.000
1050	634.0622	POSTS WOOD 4X6-INCH X 22-FT	EACH	6.000	6.000
1060	634.0814	POSTS TUBULAR STEEL 2X2-INCH X 14-FT	EACH	8.000	8.000
1070	634.0816	POSTS TUBULAR STEEL 2X2-INCH X 16-FT	EACH	2.000	2.000
1080	635.0200	SIGN SUPPORTS STRUCTURAL STEEL HS	LB	1,152.000	1,152.000
1090	636.0100	SIGN SUPPORTS CONCRETE MASONRY	CY	2.400	2.400
1100	636.0500	SIGN SUPPORTS STEEL REINFORCEMENT	LB	136.000	136.000
1110	637.0101	SIGNS TYPE I	SF	182.000	182.000
1120	637.0202	SIGNS REFLECTIVE TYPE II	SF	671.760	671.760
1130	638.2602	REMOVING SIGNS TYPE II	EACH	118.000	118.000
1140	638.3000	REMOVING SMALL SIGN SUPPORTS	EACH	76.000	76.000
1150	642.5001	FIELD OFFICE TYPE B	EACH	1.000	1.000
1160	643.0100	TRAFFIC CONTROL (PROJECT) 01. 1500-32-71	EACH	1.000	1.000
1170	643.0300	TRAFFIC CONTROL DRUMS	DAY	1,200.000	1,200.000
1180	643.0420	TRAFFIC CONTROL BARRICADES TYPE III	DAY	5,090.000	5,090.000
1190	643.0705	TRAFFIC CONTROL WARNING LIGHTS TYPE A	DAY	7,580.000	7,580.000
1200	643.0715	TRAFFIC CONTROL WARNING LIGHTS TYPE C	DAY	400.000	400.000
1210	643.0900	TRAFFIC CONTROL SIGNS	DAY	2,400.000	2,400.000
1220	643.0920	TRAFFIC CONTROL COVERING SIGNS TYPE II	EACH	9.000	9.000
1230	643.1050	TRAFFIC CONTROL SIGNS PCMS	DAY	28.000	28.000
1240	643.2000	TRAFFIC CONTROL DETOUR (PROJECT) 01. 1500-32-71	EACH	1.000	1.000
1250	643.3000	TRAFFIC CONTROL DETOUR SIGNS	DAY	41,130.000	41,130.000
1260	645.0105	GEOTEXTILE FABRIC TYPE C	SY	580.000	580.000
1270	645.0120	GEOTEXTILE FABRIC TYPE HR	SY	1,115.000	1,115.000
1280	646.0106	PAVEMENT MARKING EPOXY 4-INCH	LF	20,935.000	20,935.000
1290	646.0126	PAVEMENT MARKING EPOXY 8-INCH	LF	360.000	360.000
1300	647.0606	PAVEMENT MARKING ISLAND NOSE EPOXY	EACH	4.000	4.000
1310	647.0726	PAVEMENT MARKING DIAGONAL EPOXY 12-INCH	LF	640.000	640.000
1320	650.4000	CONSTRUCTION STAKING STORM SEWER	EACH	47.000	47.000
1330	650.4500	CONSTRUCTION STAKING SUBGRADE	LF	7,857.000	7,857.000

3

3

DATE 18JUN13 E S T I M A T E O F Q U A N T I T I E S

LINE NUMBER	ITEM	ITEM DESCRIPTION	UNIT	TOTAL	1500-32-71 QUANTITY
1340	650.5000	CONSTRUCTION STAKING BASE	LF	7,857.000	7,857.000
1350	650.5500	CONSTRUCTION STAKING CURB GUTTER AND CURB & GUTTER	LF	5,395.000	5,395.000
1360	650.6000	CONSTRUCTION STAKING PIPE CULVERTS	EACH	5.000	5.000
1370	650.9910	CONSTRUCTION STAKING SUPPLEMENTAL CONTROL (PROJECT) 01. 1500-32-71	LS	1.000	1.000
1380	650.9920	CONSTRUCTION STAKING SLOPE STAKES	LF	7,857.000	7,857.000
1390	652.0225	CONDUIT RIGID NONMETALLIC SCHEDULE 40 2-INCH	LF	1,730.000	1,730.000
1400	652.0235	CONDUIT RIGID NONMETALLIC SCHEDULE 40 3-INCH	LF	590.000	590.000
1410	653.0140	PULL BOXES STEEL 24X42-INCH	EACH	12.000	12.000
1420	653.0905	REMOVING PULL BOXES	EACH	18.000	18.000
1430	654.0105	CONCRETE BASES TYPE 5	EACH	15.000	15.000
1440	654.0220	CONCRETE CONTROL CABINET BASES TYPE 10	EACH	1.000	1.000
1450	655.0610	ELECTRICAL WIRE LIGHTING 12 AWG	LF	2,100.000	2,100.000
1460	655.0615	ELECTRICAL WIRE LIGHTING 10 AWG	LF	11,120.000	11,120.000
1470	656.0200	ELECTRICAL SERVICE METER BREAKER PEDESTAL (LOCATION) 01. USH 10 & STH 32/57	LS	1.000	1.000
1480	657.0255	TRANSFORMER BASES BREAKAWAY 11 1/2-INCH BOLT CIRCLE	EACH	15.000	15.000
1490	657.0322	POLES TYPE 5-ALUMINUM	EACH	15.000	15.000
1500	657.0710	LUMINAIRE ARMS TRUSS TYPE 4 1/2-INCH CLAMP 12-FT	EACH	15.000	15.000
1510	690.0150	SAWING ASPHALT	LF	510.000	510.000
1520	690.0250	SAWING CONCRETE	LF	175.000	175.000
1530	715.0415	INCENTIVE STRENGTH CONCRETE PAVEMENT	DOL	500.000	500.000
1540	715.0502	INCENTIVE STRENGTH CONCRETE STRUCTURES	DOL	1,938.000	1,938.000
1550	SPV.0045	SPECIAL 01. PCMS CELLULAR COMMUNICATION	DAY	28.000	28.000
1560	SPV.0060	SPECIAL 01. INLET TYPE 2 SPECIAL	EACH	1.000	1.000
1570	SPV.0060	SPECIAL 02. SECTION CORNER MONUMENTS	EACH	1.000	1.000
1580	SPV.0060	SPECIAL 03. V-LOC SIGN ANCHORS	EACH	10.000	10.000
1590	SPV.0060	SPECIAL 04. PAVEMENT MARKING GROOVED PREFORMED THERMOPLASTIC WORDS	EACH	4.000	4.000
1600	SPV.0060	SPECIAL 05. REMOVING SANITARY MANHOLES	EACH	1.000	1.000
1610	SPV.0060	SPECIAL 06. REMOVING MAIN VALVE BOXES	EACH	2.000	2.000
1620	SPV.0060	SPECIAL 07. ADJUSTING MAIN VALVE BOXES	EACH	2.000	2.000
1630	SPV.0060	SPECIAL 08. ADJUSTING WATER LATERAL CURB STOP BOXES	EACH	1.000	1.000
1640	SPV.0060	SPECIAL 09. RELOCATING HYDRANTS	EACH	3.000	3.000
1650	SPV.0060	SPECIAL 10. RELOCATING CURB STOPS	EACH	1.000	1.000
1660	SPV.0060	SPECIAL 11. 8" WATER VALVE	EACH	1.000	1.000
1670	SPV.0060	SPECIAL 12. ABANDONING SANITARY MANHOLE	EACH	2.000	2.000
1680	SPV.0060	SPECIAL 13. LED LUMINAIRE, LED-A	EACH	15.000	15.000
1690	SPV.0085	SPECIAL 01. LOW MAINTENANCE SEED MIX	LB	2.000	2.000
1700	SPV.0090	SPECIAL 01. CONCRETE CURB & GUTTER 30-INCH 4-INCH SLOPED SPECIAL	LF	290.000	290.000
1710	SPV.0090	SPECIAL 02. PAVEMENT MARKING GROOVED PREFORMED THERMOPLASTIC 18-INCH	LF	48.000	48.000
1720	SPV.0090	SPECIAL 03. ABANDONING 8" SANITARY SEWER	LF	434.000	434.000
1730	SPV.0090	SPECIAL 04. ABANDONING 8" WATERMAIN	LF	522.000	522.000
1740	SPV.0090	SPECIAL 05. 8" SANITARY SEWER	LF	461.000	461.000
1750	SPV.0090	SPECIAL 06. 8" WATERMAIN	LF	490.000	490.000
1760	SPV.0090	SPECIAL 07. REMOVING WATER LATERAL	LF	94.000	94.000

3

DATE 18JUN13 E S T I M A T E O F Q U A N T I T I E S

LINE NUMBER	ITEM	ITEM DESCRIPTION	UNIT	TOTAL	1500-32-71 QUANTITY
1770	SPV.0105	SPECIAL 01. REMOVE TRAFFIC SIGNAL	LS	1.000	1.000
1780	SPV.0195	SPECIAL 01. MANAGEMENT OF CONTAMINATED SOIL	TON	200.000	200.000
1790	SPV.0200	SPECIAL 01. RECONSTRUCTING SANITARY MANHOLES	VF	9.460	9.460
1800	SPV.0200	SPECIAL 02. 48" PRECAST SANITARY SEWER MANHOLE	VF	35.180	35.180

3

3

3

CLEARING AND GRUBBING

STATION TO STATION	DIR	LOCATION	201.0105 STA	201.0120 ID	201.0205 STA	201.0220 ID
CATEGORY 0010						
113+92	RT	USH 10 EB	+1	---	+1	---
115+85	RT	USH 10 EB	---	10	---	10
160+00 - 164+00	LT	STH 32/57 NB	4	---	4	---
PROJECT TOTAL			5	10	5	10

REMOVING CURB AND GUTTER

LOCATION	204.0150 LF
CATEGORY 0010	
EXIST INT SB SPLITTER ISLAND	78
EXIST INT NW QUAD	42
EXIST INT SW QUAD	56
EXIST INT NB SPLITTER ISLAND	76
EXIST INT SE QUAD	40
EXIST INT NE QUAD	58
PROJECT TOTAL	350

REMOVING CONCRETE SIDEWALK

LOCATION	204.0155 SY
CATEGORY 0010	
EXIST INT SB SPLITTER ISLAND	22.5
EXIST INT NB SPLITTER ISLAND	22.5
PROJECT TOTAL	45

3

REMOVING PAVEMENT

STATION	-	STATION	LOCATION	204.0100 REMOVING PAVEMENT SY
CATEGORY 0010				
110+00	-	116+00	USH 10	1,350
147+25	-	154+50	STH 32/57	1,600
			PROJECT TOTALS	2,950

REMOVING INLET

STATION	DIR	OFFSET	LOCATION	204.0220 EACH
CATEGORY 0010				
113+04	RT	62	USH 10 EB	1.0
			PROJECT TOTAL	1

REMOVING FENCE

STATION	DIR	LOCATION	204.0170 LF
CATEGORY 0010			
161+00	LT	STH 32/57 SB	75.0
		PROJECT TOTAL	75

REMOVING SMALL PIPE CULVERTS

STATION	DIR	LOCATION	203.0100 REMOVING SMALL PIPE CULVERTS EACH	COMMENTS
CATEGORY 0010				
113+04	RT	USH 10 EB	1	6" PVC
113+69	LT	USH 10 WB	1	30" CMP
115+55		USH 10 EB	2	2-30" RCCP
117+16	RT	USH 10 EB	1	24" CMP
118+15		USH 10 EB	1	30" CMP
118+25		USH 10 EB	2	2-30" CMP
137+89	RT	USH 10 EB	1	24" CMP
147+95	LT	STH 32/57 SB	2	24" CMP, 30"CMP
150+43	RT	STH 32/57 NB	1	24" CMP
154+34	RT	STH 32/57 NB	1	18" CMP
155+54	LT	STH 32/57 SB	1	24" CMP
155+73	RT	STH 32/57 NB	1	24" CMP
160+33	LT	STH 32/57 SB	2	2- 36" CMP
160+74	RT	STH 32/57 SB	1	18" CMP
162+90		STH 32/57 NB	1	24" RCCP
164+35	LT	STH 32/57 NB	2	2-36"X48" CMP
167+98	RT	STH 32/57 NB	1	24" CMP
11+60		CEMETERY RD	2	2-48" CMP
		PROJECT TOTAL	24	

EARTHWORK SUMMARY

LOCATION	FROM/TO STATION	205.0100 COMMON EXCAVATION (1)		SALVAGED\ UNUSABLE PAVEMENT MATERIAL (WITHIN CUT)	SALVAGED\ UNUSABLE PAVEMENT MATERIAL (NOT WITHIN CUT)	AVAILABLE MATERIAL (4)	UNEXPANDED FILL	EXPANDED FILL (6)	MASS ORDINATE +/- (7)	REMARKS
		CUT (2)	EBS EXCAVATION (3)	WASTE	WASTE			FACTOR 1.54		
USH 10 EB WEST	110+00 - 118+25	4,601	34	700	125	3,902	1,723	2,654	1,206	
USH 10 EB EAST	130+75 - 140+00	3,697	0	1,098	0	2,599	2,019	3,110	-510	
STH 32/57 NB SOUTH	147+25 - 156+75	4,934	38	876	35	4,058	1,819	2,801	1,209	
STH 32/57 NB NORTH	159+00 - 170+00	8,593	0	481	0	8,112	2,275	3,503	4,608	
ROUNDABOUT	10+30 - 13+27	728	0	420	0	309	2,244	3,455	-3,147	
CEMETERY ROAD	10+50 - 12+25	293	0	64	0	229	71	110	120	
PEACH TREE LANE	2+85 - 5+58	433	0	51	0	382	0	0	382	
	PROJECT TOTALS	23,279	72	3,688	160	19,591	10,151	15,633	3,869	
	TOTAL COMMON EXC	23,351								
	ROUNDED TOTAL	23,400								

NOTES:

1) COMMON EXCAVATION IS THE SUM OF THE CUT AND EBS EXCAVATION COLUMNS
2) SALVAGED/UNUSABLE PAVEMENT MATERIAL (WITHIN CUT) IS INCLUDED IN THE CUT
3) EBS EXCAVATION IS TO BE BACKFILLED WITH BORROW OF SUITABLE NATURE FOR USE AS ROADWAY EMBANKMENT CONSTRUCTION. EBS MATERIAL IS NOT TO BE USED IN FILL AND SHALL BE WASTED.
4) AVAILABLE MATERIAL = CUT - EBS - SALVAGED/UNUSABLE PAVEMENT MATERIAL WITHIN CUT
5) EBS BACKFILL FACTOR = 1.54
6) EXPANDED FILL FACTOR = 1.54; EXPANDED FILL = UNEXPANDED FILL * (FILL FACTOR)
7) A POSITIVE MASS ORDINATE QUANTITY INDICATES AN EXCESS OF MATERIAL WITHIN THE DIVISION. A NEGATIVE VALUE INDICATES A SHORTAGE OF MATERIAL.

3

BASE AGGREGATE DENSE AND WATER

STATION	TO	STATION	LOCATION	305.0110 BASE AGGREGATE DENSE 3/4-INCH TON	305.0120 BASE AGGREGATE DENSE 1 1/4-INCH TON	311.0110 BREAKER RUN TON	624.0100 WATER MGAL
CATEGORY 0010							
110+00	-	118+63	USH 10 WEST	521	5,013	4,390	60
130+52	-	140+00	USH 10 EAST	539	6,095	5,310	72
147+25	-	157+35	STH 32/57 SOUTH	577	5,680	4,875	66
158+82	-	170+00	STH 32/57 NORTH	645	6,620	5,675	77
10+00	-	13+27	ROUNDABOUT	0	1,695	1,350	18
---	-	---	CEMETERY RD	42	515	0	3
---	-	---	PEACH TREE LN	30	275	0	2
---	-	---	USH 10 WEST DRIVEWAYS	68	33	0	1
---	-	---	STH 32/57 SOUTH DRIVEWAYS	151	74	0	2
---	-	---	STH 32/57 NORTH DRIVEWAYS	269	0	0	2
---	-	---	CEMETERY RD DRIVEWAYS	5	0	0	1
---	-	---	TEMPORARY DRIVEWAY	153	0	0	1
---	-	---	UNDISTRIBUTED	0	0	0	200
			TOTALS	3,000	26,000	21,600	505

DRIVEWAYS

STATION	DIR	LOCATION	465.0120 ** ASPHALTIC SURFACE DWYS AND FIELD ENT. TON	* BASE AGGREGATE DENSE 3/4-INCH TON	* BASE AGGREGATE DENSE 1 1/4-INCH TON
CATEGORY 0010					
113+70	LT	USH 10	---	68	---
117+20	RT	USH 10	13	---	33
150+40	RT	STH 32/57	---	28	---
154+30	RT	STH 32/57	---	73	---
154+30	LT	STH 32/57	---	50	---
155+60	RT	STH 32/57	28	---	72
160+70	LT	STH 32/57	---	149	---
160+80	RT	STH 32/57	---	88	---
167+50	RT	STH 32/57	---	32	---
12+20	LT	CEM	---	5	---
		PROJECT TOTAL	41	493	104

* FOR INFORMATION ONLY. BASE COURSE QUANTITIES FOR DRIVEWAYS HAVE BEEN INCLUDED IN THE QUANTITIES IN THE BASE COURSE TABLE.
**ADDITIONAL QUANTITIES SHOWN ELSEWHERE

ASPHALTIC ITEMS

STATION	TO	STATION	LOCATION	455.0115 ASPHALTIC MATERIAL PG 64-22 TON	455.0120 ASPHALTIC MATERIAL PG 64-28 TON	460.1100 HMA PAVEMENT TYPE E-0.3 TON	460.1110 HMA PAVEMENT TYPE E-10 TON	455.0605 TACK COAT GAL	465.0120 '** ASPHALTIC SURFACE DRIVEWAYS TON	REMARKS
CATEGORY 0010										
110+00	-	118+63	USH 10 EB	46	21	---	1,210	170	27	NOTE A
130+52	-	140+00	USH 10 EB	62	28	---	1,635	225	---	---
150+00	-	157+35	STH 32/57	52	24	---	1,368	190	110	NOTE A
158+82	-	170+00	STH 32/57	65	29	---	1,706	235	63	NOTE A
---	-	---	ROUNDABOUT	17	8	---	431	60	---	---
---	-	---	CEMETERY RD	7	---	130	---	20	---	---
---	-	---	PEACH TREE LN	6	---	115	---	---	---	---
			TOTALS	255	110	245	6,350	900	200	

** ADDITIONAL QUANTITIES SHOWN ELSEWHERE
NOTE A: MEDIAN DRIVEWAY OPENINGS TO BE PAID AS ASPHALTIC SURFACE DRIVEWAYS

ASPHALT FLUMES

STATION	DIR	LOCATION	465.0315 ASPHALT FLUMES SY
CATEGORY 0010			
132+72	RT	USH 10 EB	9.5
132+75	LT	USH 10 EB	8.0
137+15	RT	USH 10 EB	13.9
138+45	RT	USH 10 EB	17.1
160+00	RT	STH 32/57 NB	9.5
160+04	LT	STH 32/57 NB	8.0
11+61	LT	CEMETERY RD	8.0
11+71	RT	CEMETERY RD	8.0
168+21	LT	STH 32/57 NB	8.0
		PROJECT TOTAL	90

CONCRETE MASONRY ENDWALLS

STATION	OFFSET	LOCATION	504.0900 CY
CATEGORY 0010			
11+45	LT	CEMETERY RD	4.5
11+45	RT	CEMETERY RD	4.5
		PROJECT TOTALS	9

REHEATING HMA PAVEMENT LONGITUDINAL JOINTS

STATION	-	STATION	LOCATION	460.4100.s STA	REMARKS
CATEGORY 0010					
110+00	-	114+00	USH 10	4	UPPER LAYER
135+15	-	140+00	USH 10	5	UPPER LAYER
147+25	-	152+45	STH 32/57	5	UPPER LAYER
162+35	-	170+00	STH 32/57	8	UPPER LAYER
10+00	-	13+27	RA	4	UPPER LAYER
			PROJECT TOTALS	26	

3

CULVERTS

STA	OFFSET	LOCATION	520.4012 CULVERT PIPE TEMPORARY 12-INCH LF	521.0118 CULVERT PIPE CORRUGATED STEEL 18-INCH LF	521.0124 CULVERT PIPE CORRUGATED STEEL 24-INCH LF	521.0130 CULVERT PIPE CORRUGATED STEEL 30-INCH LF	521.0764 PIPE ARCH CORRUGATED STEEL 64x43-INCH LF	523.0424 CULVERT PIPE REINFORCED CONCRETE HE CLASS IV 24x38-INCH LF	STEEL THICKNESS (IN)	Notes
CATEGORY 0010										
113+69	LT	USH 10 WB	---	---	---	40	---	---	0.064	
117+16	RT	USH 10 EB	---	---	28	---	---	---	0.064	
401+48	---	TEMPORARY DRIVEWAY	58	---	---	---	---	--	0.064	
137+89	RT	USH 10 EB	---	---	66	---	---	---	0.064	
147+93	LT	STH 32/57 SB	---	---	---	76	---	---	0.079	2-Pipes
150+41	RT	STH 32/57 NB	---	---	36	---	---	---	0.064	
154+33	RT	STH 32/57 NB	---	---	54	---	---	---	0.064	
154+33	LT	STH 32/57 SB	---	---	---	112	---	---	0.079	2-Pipes
155+48	RT	STH 32/57 NB	---	---	52	---	---	---	0.064	
160+78	RT	STH 32/57 NB	---	46	---	---	---	---	0.064	
165+12	---	STH 32/57 NB	---	---	---	---	---	228	---	2-Pipes
167+98	RT	STH 32/57 NB	---	---	40	---	---	---	0.064	
11+46	---	CEMETERY RD	---	---	---	---	246	---	0.109	
		PROJECT TOTALS	58	46	276	228	246	228		

APRON ENDWALLS

STA	OFFSET	LOCATION	521.1012 AEW FOR CULVERT PIPE STEEL 12-INCH EACH	521.1018 AEW FOR CULVERT PIPE STEEL 18-INCH EACH	521.1024 AEW FOR CULVERT PIPE STEEL 24-INCH EACH	523.0524 AEW FOR CULVERT PIPE REINFORCED CONCRETE HE 24x38-INCH EACH	521.1524 AEW FOR CULVERT PIPE SLOPED SIDE DRAINS STEEL 24-INCH 6 TO 1 EACH	521.1530 AEW FOR CULVERT PIPE SLOPED SIDE DRAINS STEEL 30-INCH 6 TO 1 EACH	628.7555 CULVERT PIPE CHECKS EACH	*633.5200 MARKER CULVERT END EACH	INLET ELEV	DISCHARGE ELEV
CATEGORY 0010												
113+69	LT	USH 10 WB	---	---	---	---	---	2	3	---	---	---
115+75	RT	USH 10 EB	---	---	---	---	---	---	14	---	---	---
117+16	RT	USH 10 EB	---	---	2	---	---	---	3	---	---	---
401+48	---	TEMPORARY DRIVEWAY	2	---	---	---	---	---	2	---	---	---
137+89	RT	USH 10 EB	---	---	2	---	---	---	3	---	---	---
147+93	LT	STH 32/57 SB	---	---	---	---	---	4	3	---	---	---
150+41	RT	STH 32/57 NB	---	---	---	---	2	---	3	---	---	---
154+33	RT	STH 32/57 NB	---	---	2	---	---	---	3	---	---	---
154+33	LT	STH 32/57 SB	---	---	---	---	---	4	3	---	---	---
155+48	RT	STH 32/57 NB	---	---	2	---	---	---	3	---	---	---
160+50	LT	STH 32/57 NB	---	---	---	---	---	---	14	---	---	---
160+78	RT	STH 32/57 NB	---	2	---	---	---	---	2	---	---	---
165+12	---	STH 32/57 NB	---	---	---	4	---	---	8	2	827.70	826.70
167+98	RT	STH 32/57 NB	---	---	---	---	2	---	3	---	---	---
11+46	---	CEMETERY RD	---	---	---	---	---	---	21	2	825.24	825.03
		PROJECT TOTALS	2	2	8	4	4	10	88	4		

*ADDITIONAL QUANTITIES SHOWN ELSEWHERE

3

MANHOLES, INLETS, AND COVERS

STRUCTURE NUMBER	LOCATION STATION	OFFSET RL	OFFSET DIST.	OFFSET DIR.	STRUCTURE	522.1012 CONC AEW SIZE 12-INCH	522.1036 CONC AEW SIZE 36-INCH	611.2006 MH 6-FT DIA EACH	611.3230 INLET 2X3-FT EACH	SPV.0060.01 INLET TYPE 2 SPECIAL EACH	611.0624 INLET COVERS TYPE H EACH	611.0639 INLET COVERS TYPE H-S EACH	611.0652 INLET COVERS TYPE T EACH	*633.5200 MARKERS CULVERT END EACH	TOP OF COVER/ FLANGELINE ELEVATION	TOP OF STRUCTURE ELEVATION	STRUCTURE DEPTH (FT)	INVERT ELEVATION (FT)	REMARKS
10	115 + 50.	EB	63	LT	AEW	1	---	---	---	---	---	---	---	1		0.00		833.00	
10.1	115 + 25.	EB	18.33	LT	INLET	---	---	---	1	---	---	1	---	---	837.93	836.68	3.53	833.15	
10.2	115 + 20.	EB	4.65	LT	INLET	---	---	---	1	---	---	1	---	---	837.98	836.73	3.53	833.20	
11	117 + 05.	EB	67.5	LT	AEW	1	---	---	---	---	---	---	---	1		0.00		831.90	
11.1	117 + 05.	EB	1.5	LT	INLET	---	---	---	1	---	1	---	---	---	838.17	836.92	4.02	832.90	
12	118 + 02.	EB	65.5	LT	AEW	1	---	---	---	---	---	---	---	1		0.00		832.00	
12.1	118 + 01.	EB	28.65	LT	INLET	---	---	---	1	---	---	1	---	---	837.27	836.02	3.83	832.19	
12.2	118 + 00.	EB	9.45	LT	INLET	---	---	---	1	---	---	1	---	---	837.55	836.30	3.85	832.45	
13	118 + 15.	EB	54	RT	AEW	---	1	---	---	---	---	---	---	1		0.00		831.40	
13.1	118 + 15.	EB	67.5	LT	AEW	---	1	---	---	---	---	---	---	1		0.00		831.00	
14	118 + 22.	EB	54	RT	AEW	---	1	---	---	---	---	---	---	1		0.00		831.40	
14.1	118 + 22.	EB	18.15	RT	MH	---	---	1	---	---	---	1	---	---	837.41	836.16	4.88	831.28	NOTE A
14.2	118 + 22.	EB	1.5	LT	MH	---	---	1	---	---	---	1	---	---	837.74	836.49	5.27	831.22	NOTE A
14.3	118 + 22.	EB	67.5	LT	AEW	---	1	---	---	---	---	---	---	1		0.00		831.00	
15	10 + 30.	RA	55	RT	AEW	1	---	---	---	---	---	---	---	1		0.00		832.30	
15.1	10 + 30.6	RA	2	LT	INLET	---	---	---	---	1	---	---	1	---	837.43	836.58	4.11	832.47	
16	132 + 00.	EB	62.5	LT	AEW	1	---	---	---	---	---	---	---	1		0.00		832.36	
16.1	132 + 00.	EB	12.5	LT	INLET	---	---	---	1	---	1	---	---	---	837.89	836.64	4.09	832.55	
16.2	132 + 00.	EB	1.5	LT	INLET	---	---	---	1	---	1	---	---	---	837.67	836.42	3.82	832.60	
17	133 + 40.	EB	68	LT	AEW	1	---	---	---	---	---	---	---	1		0.00		831.90	
17.1	133 + 40.	EB	1.5	LT	INLET	---	---	---	1	---	1	---	---	---	836.97	835.72	3.62	832.10	
18	135 + 07.6	EB	66	LT	AEW	1	---	---	---	---	---	---	---	1		0.00		831.36	
18.1	135 + 07.6	EB	8.77	LT	INLET	---	---	---	1	---	1	---	---	---	836.2	834.95	3.42	831.53	
18.2	135 + 07.6	EB	1.5	LT	INLET	---	---	---	1	---	1	---	---	---	836.13	834.88	3.32	831.56	
19	153 + 70.	NB	65.5	LT	AEW	1	---	---	---	---	---	---	---	1		0.00		833.33	
19.1	153 + 65.	NB	18.8	LT	INLET	---	---	---	1	---	1	---	---	---	839.57	838.32	4.07	834.25	
19.2	153 + 65.	NB	4.73	LT	INLET	---	---	---	1	---	1	---	---	---	839.64	838.39	3.94	834.45	
20	155 + 10.	NB	63.5	LT	AEW	1	---	---	---	---	---	---	---	1		0.00		833.00	
20.1	155 + 11.	NB	17.9	LT	INLET	---	---	---	1	---	1	---	---	---	839.02	837.77	4.32	833.45	
20.2	155 + 10.	NB	1.5	LT	INLET	---	---	---	1	---	1	---	---	---	838.84	837.59	3.89	833.70	
20.3	154 + 40.	NB	1.5	LT	INLET	---	---	---	1	---	1	---	---	---	839.3	838.05	4.00	834.05	
21	157 + 00.	NB	54.75	RT	AEW	1	---	---	---	---	---	---	---	1		0.00		833.61	
21.1	156 + 69.	NB	18.4	RT	INLET	---	---	---	1	---	---	1	---	---	837.87	836.62	2.89	833.73	
21.2	156 + 40.6	NB	1.5	LT	INLET	---	---	---	1	---	---	1	---	---	838.13	836.88	3.03	833.85	
21.3	156 + 51.5	NB	12.2	LT	INLET	---	---	---	1	---	1	---	---	---	838.49	837.24	3.34	833.90	
22	156 + 85.	NB	81	LT	AEW	1	---	---	---	---	---	---	---	1		0.00		831.49	
22.1	156 + 88.7	NB	38.5	LT	INLET	---	---	---	1	---	---	1	---	---	837.91	836.66	4.26	832.40	
22.2	156 + 96.	NB	18.3	LT	INLET	---	---	---	1	---	---	1	---	---	838.27	837.02	4.12	832.90	
23	160 + 20.	NB	62	LT	AEW	1	---	---	---	---	---	---	---	1		0.00		830.75	
23.1	160 + 10.	NB	11.73	LT	INLET	---	---	---	1	---	1	---	---	---	837.11	835.86	4.11	831.75	
23.2	160 + 10.	NB	1.5	LT	INLET	---	---	---	1	---	1	---	---	---	837.32	836.07	4.12	831.95	
24	161 + 50.	NB	62	LT	AEW	1	---	---	---	---	---	---	---	1		0.00		830.79	
24.1	161 + 44.	NB	11	LT	INLET	---	---	---	1	---	1	---	---	---	836.28	835.03	3.73	831.30	
24.2	161 + 44.	NB	1.5	LT	INLET	---	---	---	1	---	1	---	---	---	836.66	835.41	3.91	831.50	
25	162 + 35.	NB	64	LT	AEW	1	---	---	---	---	---	---	---	1		0.00		830.94	
25.1	162 + 28.6	NB	8.59	LT	INLET	---	---	---	1	---	1	---	---	---	835.77	834.52	3.41	831.11	
25.2	162 + 28.6	NB	1.5	LT	INLET	---	---	---	1	---	1	---	---	---	836.08	834.83	3.69	831.14	
					TOTALS	**14**	**4**	**2**	**26**	**1**	**18**	**10**	**1**	**18**					

NOTE : TOP OF COVER ELEVATION IS FLANGE ELEVATION
NOTE A: CONCRETE FLAT SLAB TOP WITH INLET SIZE OPENING REQUIRED
* QUANTITIES SHOWN ELSEWHERE

3

STORM SEWER SUMMARY

LOCATION FROM	LOCATION To	608.0412 RCP CLASS IV 12-INCH L.F.	608.0436 RCP CLASS IV 36-INCH L.F.	INLET ELEVATION	DISCHARGE ELEVATION
10.2	10.1	16	---	833.20	833.15
10.1	10	51	---	833.15	833.00
11.1	11	67	---	832.90	831.90
12.2	12.1	17	---	832.45	832.19
12.1	12	38	---	832.19	832.00
13	13.1	---	122	831.40	831.00
14	14.1	---	36	832.60	832.55
14.1	14.2	---	19	832.90	831.90
14.2	14.3	---	67	832.45	832.19
15.1	15	57	---	832.47	832.30
16.2	16.1	13	---	832.60	832.55
16.1	16	50	---	832.55	832.36
17.1	17	67	---	832.10	831.90
18.2	18.1	8	---	831.56	831.53
18.1	18	57	---	831.53	831.36
19.2	19.1	15	---	834.45	834.25
19.1	19	47	---	834.25	833.33
20.3	20.2	70	---	834.05	833.70
20.2	20.1	17	---	833.70	833.45
20.1	20	45	---	833.45	833.00
21.3	21.2	16	---	833.90	833.85
21.2	21.1	38	---	833.85	833.73
21.1	21	39	---	833.73	833.61
22.2	22.1	22	---	832.90	832.40
22.1	22	44	---	832.40	831.49
23.2	23.1	11	---	831.95	831.75
23.1	23	51	---	831.75	830.75
24.2	24.1	11	---	831.50	831.30
24.1	24	51	---	831.30	830.79
25.2	25.1	8	---	831.14	831.11
25.1	25	55	---	831.11	830.94
	TOTALS	981	244		

CONCRETE CURB AND GUTTER

STATION	-	STATION	LOCATION	601.0405 18-INCH TYPE A LF	601.0411 30-INCH TYPE D LF	SPV.0090.01 30-INCH 4-INCH SLOPED SPECIAL LF	601.0553 4-IN SLOPED 36-INCH TYPE D LF	601.0580 4-IN SLOPED 36-INCH TYPE R LF	601.0600 CURB PEDESTRIAN LF
CATEGORY 0010									
114+00	-	118+63	USH 10	---	368	---	541	---	12
130+51	-	135+15	USH 10	---	368	---	542	---	16
152+45	-	157+09	STH 32/57	---	403	---	510	---	14
158+82	-	162+35	STH 32/57	---	266	---	423	---	14
10+00	-	13+27	RA	195	---	---	---	310	---
---	-	---	NE QUAD	---	135	148	---	---	---
---	-	---	NW QUAD	---	275	---	---	---	---
---	-	---	SW QUAD	---	140	142	---	---	---
---	-	---	SE QUAD	---	285	---	---	---	---
---	-	---	CEMETERY RD RAD	---	---	---	150	---	---
---	-	---	KELLER ST RAD	---	---	---	194	---	---
			PROJECT TOTALS	195	2,240	290	2,360	310	56

RIPRAP

STATION	DIR	LOCATION	606.0200 MEDIUM CY	645.0120 GEOTEXTILE FABRICE TYPE HR SY
CATEGORY 0010				
132+72	RT	USH 10 EB	3.6	13.4
132+75	LT	USH 10 EB	6.7	22.0
160+00	RT	STH 32/57 NB	6.7	22.0
NW QUAD	-	RA	287.2	842.4
168+21	LT	STH 32/57 NB	3.6	13.4
11+61	LT	CEMETERY RD	14.3	42.8
11+71	RT	CEMETERY RD	12.9	39.0
		PROJECT TOTAL	335.00	995.00

CONCRETE MEDIAN SLOPE NOSE

STATION	DIR	LOCATION	620.0300 SF	REMARKS
CATEGORY 0010				
114+02	LT	USH 10 EB	60.0	TYPE 1
118+53	LT	USH 10 EB	22.0	TYPE 2
118+56	LT	USH 10 EB	19.3	TYPE 2
130+60	LT	USH 10 EB	22.0	TYPE 2
130+64	LT	USH 10 EB	19.3	TYPE 2
135+14	LT	USH 10 EB	60.0	TYPE 1
152+45	LT	STH 32/57 NB	60.0	TYPE 1
156+99	LT	STH 32/57 NB	22.0	TYPE 2
157+03	LT	STH 32/57 NB	19.3	TYPE 2
158+86	LT	STH 32/57 NB	22.0	TYPE 2
158+90	LT	STH 32/57 NB	19.1	TYPE 2
162+35	LT	STH 32/57 NB	60.0	TYPE 1
		PROJECT TOTAL	405	

COLORED CONCRETE

STATION	-	STATION	LOCATION	405.0100 COLORED CONCRETE CY	415.0080 CONCRETE PAVEMENT 8-INCH SY	416.0512 CONCRETE ROUNDABOUT TRUCK APRON 12-INCH SY	*** COLORED SIDEWALK 4-INCH SF	*** NON COLORED SIDEWALK 4-INCH SF	602.0405 SIDEWALK 4-INCH SF	602.0505 CURB RAMP DETECTABLE WARNING FIELD YELLOW SF
CATEGORY 0010										
114+00	-	118+63	USH 10	61	54	---	3,960	89	4,049	36
130+51	-	135+15	USH 10	50	56	---	3,052	107	3,159	36
152+45	-	157+09	STH 32/57	38	---	---	3,108	97	3,205	36
158+82	-	162+35	STH 32/57	19	---	---	1,550	97	1,647	36
10+00	-	13+27	RA	162	---	480	---	---	---	---
			PROJECT TOTALS	330	110	480			12,060	144

*** FOR INFORMATION ONLY

3

3

EROSION CONTROL

STATION	-	STATION	R/L	628.1504 SILT FENCE LF	628.1520 SILT FENCE MAINTENANCE LF	628.1905 MOBILIZATIONS EROSION CONTROL EACH	628.1910 MOBILIZATIONS EMERGENCY EROSION CONTROL EACH	628.2004 EROSION MAT CLASS I TYPE B SY	628.2006 EROSION MAT URBAN CLASS I TYPE A SY	628.2008 EROSION MAT URBAN CLASS I TYPE B SY
CATEGORY 0010										
110+00	-	118+63	USH 10 EB	---	---	---	---	489	---	191
130+52	-	140+00	USH 10 EB	610	610	---	---	---	---	---
110+00	-	118+64	USH 10 WB	---	---	---	---	667	---	---
130+52	-	140+00	USH 10 WB	930	930	---	---	---	---	3
147+25	-	157+10	STH 32/57 NB	360	360	---	---	1,290	---	6
158+82	-	170+00	STH 32/57 NB	---	---	---	---	733	---	3
147+25	-	157+11	STH 32/57 SB	---	---	---	---	944	---	---
158+80	-	170+00	STH 32/57 SB	270	270	---	---	1,848	---	---
10+00	-	13+27.74	RA	---	---	---	---	---	500	---
10+00	-	12+25	CEMETERY RD	100	100	---	---	---	67	---
2+85.74	-	5+58.74	PEACH TREE LN	---	---	---	---	---	86	---
UNDISTRIBUTED				190	190	6	2	1,529	177	57
			PROJECT TOTALS	2,460	2,460	6	2	7,500	830	260

ROCK BAGS AND TEMPORARY DITCH CHECKS

STATION	DIR	LOCATION	628.7504 TEMPORARY DITCH CHECKS LF	628.7570 ROCK BAGS EACH	COMMENTS
CATEGORY 0010					
112+15	LT	USH 10 WB	---	8	ROCK BAGS ONLY
113+70	RT	USH 10 EB	---	12	ROCK BAGS ONLY
114+80	RT	USH 10 EB	12	8	ROCK BAGS & EROSION BALES
117+62	LT	USH 10 WB	12	8	ROCK BAGS & EROSION BALES
118+60	LT	USH 10 WB	12	8	ROCK BAGS & EROSION BALES
132+50	RT	USH 10 EB	---	8	ROCK BAGS ONLY
134+00	RT	USH 10 EB	---	8	ROCK BAGS ONLY
140+00	LT	USH 10 WB	---	8	ROCK BAGS ONLY
140+00	RT	USH 10 EB	---	8	ROCK BAGS ONLY
140+25	LT	USH 10 WB	---	8	ROCK BAGS ONLY
140+25	RT	USH 10 EB	---	8	ROCK BAGS ONLY
150+00	LT	STH 32/57 SB	12	8	ROCK BAGS & EROSION BALES
152+00	LT	STH 32/57 SB	12	8	ROCK BAGS & EROSION BALES
152+50	RT	STH 32/57 NB	---	8	ROCK BAGS ONLY
156+00	LT	STH 32/57 SB	12	8	ROCK BAGS & EROSION BALES
162+25	LT	STH 32/57 SB	12	8	ROCK BAGS & EROSION BALES
163+00	RT	STH 32/57 NB	---	8	ROCK BAGS & EROSION BALES
165+30	LT	STH 32/57 SB	12	8	ROCK BAGS & EROSION BALES
170+00	RT	STH 32/57 NB	---	8	ROCK BAGS ONLY
170+25	RT	STH 32/57 NB	---	8	ROCK BAGS ONLY
11+75	RT	CEMETERY RD	12	8	ROCK BAGS & EROSION BALES
11+89	RT	CEMETERY RD	12	8	ROCK BAGS & EROSION BALES
---	-	UNDISTRIBUTED	30	20	ROCK BAGS & EROSION BALES
		PROJECT TOTALS	150	200	

LANDSCAPING ITEMS

STATION	-	STATION	LOCATION	625.0500 SALVAGED TOPSOIL SY	625.1005 TOPSOIL CY	627.0200 MULCHING SY	628.6510 SOIL STABLILIZER TYPE B ACRE	629.0210 FERTILIZER TYPE B CWT	630.0130 SEEDING MIXTURE NO 30 LB	630.0140 SEEDING MIXTURE NO 40 LB	630.0200 SEEDING TEMPORARY LB	SPV.0085.01 LOW MAINTENANCE SEED MIX LB
CATEGORY 0010												
110+00	-	118+63	USH 10 EB	2,890	---	2,195	---	1.5	---	43.7	---	---
130+52	-	140+00	USH 10 EB	1,920	---	1,920	---	0.9	10.5	15.2	---	---
110+00	-	118+64	USH 10 WB	2,385	---	1,700	---	1.2	26.7	7.9	---	---
130+52	-	140+00	USH 10 WB	2,115	---	2,115	---	1.0	---	29.1	---	---
147+25	-	157+10	STH 32/57 NB	2,310	---	1,015	---	1.1	---	32.3	---	---
158+82	-	170+00	STH 32/57 NB	2,840	---	2,105	---	1.4	17.6	17.6	---	---
147+25	-	157+11	STH 32/57 SB	3,525	---	2,585	---	1.9	54.5	63.4	---	---
158+80	-	170+00	STH 32/57 SB	4,955	---	3,170	---	2.9	83.1	93.6	---	---
10+00	-	13+27.74	RA QUADRANTS	1,000	---	500	---	1.1	8.3	22.3	---	2.0
10+00	-	13+27.74	RA	---	70	---	---	---	---	---	---	---
10+00	-	12+25	CEMETERY RD	650	---	585	---	0.3	---	11.6	---	---
2+85.74	-	5+58.74	PEACH TREE LN	770	---	685	---	0.3	---	13.7	---	---
UNDISTRIBUTED				5,740	---	4,625	7.0	3	49.3	89.6	100.0	0.0
			PROJECT TOTALS	31,100	70	23,200	7	17.0	250	440	100	2

3

INLET PROTECTION

STATION	OFFSET	DIR	LOCATION	628.7015 INLET PROTECTION TYPE C EACH	628.7020 INLET PROTECTION TYPE D EACH
CATEGORY 0010					
115+25	18.33	LT	USH 10 'EB'	---	1
115+20	4.65	LT	USH 10 'EB'	---	1
117+05	1.50	LT	USH 10 'EB'	1	---
118+01	28.65	LT	USH 10 'EB'	---	1
118+00	9.45	LT	USH 10 'EB'	---	1
118+22	18.15	LT	USH 10 'EB'	---	1
118+22	1.50	LT	USH 10 'EB'	---	1
10+31	2.00	LT	RA	---	1
132+00	12.50	LT	USH 10 'EB'	1	---
132+00	1.50	LT	USH 10 'EB'	1	---
133+40	1.50	LT	USH 10 'EB'	1	---
135+08	8.77	LT	USH 10 'EB'	1	---
135+08	1.50	LT	USH 10 'EB'	1	---
153+65	18.80	LT	STH 32/57 'NB'	1	---
153+65	4.73	LT	STH 32/57 'NB'	1	---
155+11	17.90	LT	STH 32/57 'NB'	1	---
155+10	1.50	LT	STH 32/57 'NB'	1	---
154+40	1.50	LT	STH 32/57 'NB'	1	---
156+75	19.60	LT	STH 32/57 'NB'	---	1
156+41	1.50	LT	STH 32/57 'NB'	---	1
156+52	12.20	LT	STH 32/57 'NB'	---	1
156+89	38.50	LT	STH 32/57 'NB'	---	1
156+96	18.30	LT	STH 32/57 'NB'	1	---
160+10	11.73	LT	STH 32/57 'NB'	1	---
160+10	1.50	LT	STH 32/57 'NB'	1	---
161+44	11.00	LT	STH 32/57 'NB'	1	---
161+44	1.50	LT	STH 32/57 'NB'	1	---
162+29	8.59	LT	STH 32/57 'NB'	1	---
162+29	1.50	LT	STH 32/57 'NB'	1	---
			PROJECT TOTALS	18	11

TRAFFIC CONTROL

STAGE	LOCATION	SERVICE PERIOD DAYS	643.0300 DRUMS NO	DAYS	643.0420 *** BARRICADES TYPE III NO	DAYS	643.0705 WARNING LIGHTS TYPE A NO	DAYS	643.0715 WARNING LIGHTS TYPE C NO	DAYS	643.0900 SIGNS NO	DAYS	SPV.0045.01 PCMS CELLULAR COMMUNICATIONS NO	DAYS	REMARKS
CATEGORY 0010															
	USH 10 TEMPORARY DWY	40	10	400	3	120	--	--	10	400	--	--	--	--	
1	USH 10 WEST APPROACH	90	--	--	7	630	10	900	--	--	5	450	1	7	NOTE A
1	USH 10 EAST APPROACH	90	--	--	7	630	10	900	--	--	5	450	1	7	NOTE A
1	STH 32/57 SOUTH APPROACH	90	--	--	7	630	10	900	--	--	5	450	1	7	NOTE A
1	STH 32/57 NORTH APPROACH	90	--	--	7	630	10	900	--	--	5	450	1	7	NOTE A
1	CEMETERY ROAD	90	--	--	3	270	6	540	--	--	2	180	--	--	
1	SHADY LANE	90	--	--	2	180	4	360	--	--	3	270	--	--	
1	KELLER LANE	90	--	---	10	900	11	990	--	--	1	90	--	--	
	UNDISTRIBUTED	--	--	800	--	110	--	110	--	--	--	60	--	--	
	PROJECT TOTALS			1,200		4,100		5,600		400		2,400		28	

NOTE A: INSTALL PORTABLE CHANGEABLE MESSAGE SIGN 7 DAYS BEFORE CLOSURE.
*** - QUANTITIES SHOWN ELSEWHERE IN THE PLANS

TREES AND SHRUBS

LOCATION	632.0201.01 SHRUBS ROSE, RUGOSA BALLED & BURLAPED 2-FT EACH	632.0201.02 SHRUBS JUNIPER, MANEY CONTAINER GROWN 15" SPD EACH	632.0201.03 SHRUBS SERVICEBERRY, APPLE BALLED & BURLAPED 12-14 FT EACH	632.9101 LANDSCAPE PLANTING SURVEILLANCE AND CARE CYCLE EACH
CATEGORY 0010				
ROUNDABOUT	35	18	3	20
PROJECT TOTAL	35	18	3	20

PAVEMENT MARKING

STATION - STATION	LOCATION	**** EPOXY 4-INCH (WHITE) LF	**** EPOXY 4-INCH (YELLOW) LF	646.0106 EPOXY 4-INCH LF	646.0126 EPOXY 8-INCH (WHITE) LF	647.0606 ISLAND NOSE EPOXY (YELLOW) EACH	647.0726 DIAGONAL EPOXY 12-INCH (YELLOW) LF	SPV.0060.04 GROOVED PREFORMED THERMOPLASTIC WORDS EACH	SPV.0090.02 GROOVED PREFORMED THERMOPLASTIC 18-INCH (WHITE) LF	REMARKS
CATEGORY 0010										
105+00 - 114+75	USH 10	975	2,575	3,550	---	1	125	---	---	NOTE A
114+75 - 118+60	USH 10	555	860	1,415	60	---	5	1	12	
130+40 - 131+25	USH 10	---	120	120	60	---	---	1	12	
131+25 - 136+50	USH 10	980	1,590	2,570	20	1	120	---	---	
136+50 - 145+00	USH 10	610	1,590	2,200	100	---	35	---	---	NOTE A
142+65 - 150+75	STH 32/57	700	1,430	2,130	---	---	20	---	---	NOTE A
150+75 - 156+25	STH 32/57	1,060	1,605	2,665	---	1	120	---	---	
156+25 - 157+20	STH 32/57	---	150	150	60	---	---	1	12	
158+70 - 159+75	STH 32/57	---	160	160	60	---	5	1	12	
159+75 - 165+50	STH 32/57	1,155	1,970	3,125	---	1	200	---	---	
165+50 - 170+00	STH 32/57	780	1,300	2,080	---	---	10	---	---	
10+00 - 12+25	CEMETARY RD	340	430	770	---	---	---	---	---	
	PROJECT TOTALS			20,935	360	4	640	4	48	

**** FOR INFORMATION ONLY.
NOTE A. INCLUDES CENTERLINE PAVEMENT MARKING OUTSIDE CONSTRUCTION LIMITS

3

ERECTION OF TYPE II SIGNS AND SUPPORTS

SIGN NO.	LOCATION	SIGN CODE	W X H	637.0202 SIGNS REFLECTIVE TYPE II S.F.	634.0614 POSTS WOOD 4x6x14 EACH	634.0616 POSTS WOOD 4x6x16 EACH	634.0622 POSTS WOOD 4x6x22 EACH	634.0814 POSTS TUBULAR STEEL 2X2X14 EACH	634.0816 POSTS TUBULAR STEEL 2X2X16 EACH	SPV.0060.03 V-LOCK SIGN ANCHORS EACH	REMARKS
1	USH 10, W. OF STH 32/57	J1-2	48" X 39"	13.00	1						STH 32, STH 57, SEE PLAN SHEET
2	"	R1-1	30" X 30"	5.18	1						
3	"	W2-6	30" X 30"	6.25		1					
3A	"	W13-1	18" X 18"	2.25							15 MPH, MOUNT BELOW SIGN #3A
4	"	D2-2	72" X 24"	12.00	1	1					SEE SIGN DETAIL
5	USH 10 MEDIAN, W. OF STH 32/57	R4-7	24" X 30"	5.00	1						
6	USH 10, W. OF STH 32/57	R2-1	24" X 30"	5.00	1						55 MPH
7	SEE TYPE I SIGNS										
8	"	J4-1	24" X 36"	6.00	1						USH 10, SEE PLAN SHEET
9	"	D1-3	72" X 42"	21.00	1	1					SEE SIGN DETAIL
10	"	W3-2	36" X 36"	9.00	1						
11	USH 10 AT STH 32/57	R1-2	36" X 31"	3.88				1		1	
11A	"	R1-54	24" X 15"	2.50							MOUNT BELOW SIGN #11
12	USH 10 ISLAND AT STH 32/57	R1-2	36" X 31"	3.88				1		1	
12A	"	R6-2R	24" X 30"	5.00							MOUNT BELOW SIGN #12
13	"	D1-1	42" X 30"	8.75				1		1	SEE SIGN DETAIL
14	STH 32/57, S. OF USH 10	R1-1	30" X 30"	5.18	1						
15	"	D2-3	78" X 36"	19.50	1	1					SEE SIGN DETAIL
16	"	R2-1	24" X 30"	5.00	1						55 MPH
17	"	J4-2	48" X 36"	12.00	1						STH 32, STH 57, SEE PLAN SHEET
18	STH 32/57 ISLAND AT USH 10	D1-1	72" X 30"	15.00	2						SEE SIGN DETAIL
19	IN ROUNDABOUT	R6-1R	36" X 12"	3.00	2						
19A	"	R6-4B	60" X 24"	10.00							MOUNT BELOW SIGN #19
20	"	R6-1R	36" X 12"	3.00				2		2	
20A	"	R6-4B	60" X 24"	10.00							MOUNT BELOW SIGN #20
21	STH 32/57, N. OF USH 10	R1-2	36" X 31"	3.88	1						
21A	"	R1-54	24" X 15"	2.50							MOUNT BELOW SIGN #21
22	STH 32/57 ISLAND N. OF USH 10	R1-2	36" X 31"	3.88		1					
22A	"	R6-2R	24" X 30"	5.00							MOUNT BELOW SIGN #22
23	STH 32/57 N. OF USH 10	W3-2	36" X 36"	9.00	1						
24	"	D1-3	72" X 42"	21.00	1	1					SEE SIGN DETAIL
25	STH 32/57 MEDIAN N. OF USH 10	R4-7	36" X 48"	12.00		1					
	PROJECT SUBTOTALS			248.63	19	7	0	5	0	5	

PLAN SHEET PRODUCED
BY WisDOT - NE REGION

3

ERECTION OF TYPE II SIGNS AND SUPPORTS

SIGN NO.	LOCATION	SIGN CODE	W X H	637.0202 SIGNS REFLECTIVE TYPE II S.F.	634.0614 POSTS WOOD 4x6x14 EACH	634.0616 POSTS WOOD 4x6x16 EACH	634.0622 POSTS WOOD 4x6x22 EACH	634.0814 POSTS TUBULAR STEEL 2X2X14 EACH	634.0816 POSTS TUBULAR STEEL 2X2X16 EACH	SPV.0060.03 V-LOCK SIGN ANCHORS EACH	REMARKS
26	STH 32/57 N. OF USH 10	D1-62	108" X 84"	63.00			3				SEE SIGN DETAIL
27	"	W2-6	30" X 30"	6.25		1					
27A	"	W13-1	18" X 18"	2.25							15 MPH, MOUNT BELOW SIGN #27A
28	"	J1-1	24" X 39"	6.50	1						USH 10, SEE PLAN SHEET
29	CEMETERY RD AT STH 32/57	R1-1	30" X 30"	5.18	1						
30	CEMETERY RD	W1-6	48" X 24"	8.00	1						
31	STH 32/57 S. OF USH 10	J1-1	24" X 39"	6.50	1						USH 10, SEE PLAN SHEET
32	"	W2-6	30" X 30"	6.25		1					
32A	"	W13-1	18" X 18"	2.25							15 MPH, MOUNT BELOW SIGN #32A
33	STH 32/57 MEDIAN, S. OF USH 10	R4-7	36" X 48"	12.00		1					
34	STH 32/57 S. OF USH 10	D1-62	108" X 84"	63.00			3				SEE SIGN DETAIL
35	"	D1-3	72" X 42"	21.00	1	1					SEE SIGN DETAIL
36	"	W3-2	36" X 36"	9.00	1						
37	STH 32/57 ISLAND S. OF USH 10	R1-2	36" X 31"	3.88		1					
37A	"	R6-2R	24" X 30"	5.00							MOUNT BELOW SIGN #37
38		R1-2	36" X 31"	3.88	1						
38A	"	R1-54	24" X 15"	2.50	1						MOUNT BELOW SIGN #38
39	IN ROUNDABOUT	R6-1R	36" X 12"	3.00				2		2	
39A	"	R6-4B	60" X 24"	10.00							MOUNT BELOW SIGN #39
40	USH 10 MEDIAN E. OF STH 32/57	D1-1	42" X 30"	8.75				1		1	SEE SIGN DETAIL
41	IN ROUNDABOUT	R6-1R	36" X 12"	3.00	2						
41A	"	R6-4B	60" X 24"	10.00							MOUNT BELOW SIGN #41
42	USH 10 MEDIAN E. OF STH 32/57	R1-2	36" X 31"	3.88					1	1	
42A	"	R6-2R	24" X 30"	5.00							MOUNT BELOW SIGN #42
43	USH 10, E. OF STH 32/57	R1-2	36" X 31"	3.88					1	1	
43A	"	R1-54	24" X 15"	2.50							MOUNT BELOW SIGN #43
44	STH 32/57 ISLAND N. OF USH 10	D1-1	72" X 30"	15.00	2						SEE SIGN DETAIL
45	STH 32/57 N. OF USH 10	J4-2	48" X 36"	12.00	1						STH 32, STH 57, SEE PLAN SHEET
46	"	R2-1	24" X 30"	5.00	1						55 MPH
47	"	D2-3	84" X 36"	21.00	1	1					SEE SIGN DETAIL
48	USH 10, E. OF STH 32/57	W3-2	36" X 36"	9.00	1						
49	"	D1-3	72" X 42"	21.00	1	1					SEE SIGN DETAIL
	PROJECT SUBTOTALS			359.45	17	7	6	3	2	5	

PLAN SHEET PRODUCED
BY WisDOT - NE REGION

3

ERECTION OF TYPE II SIGNS AND SUPPORTS

SIGN NO.	LOCATION	SIGN CODE	W X H	637.0202 SIGNS REFLECTIVE TYPE II S.F.	634.0614 POSTS WOOD 4x6x14 EACH	634.0616 POSTS WOOD 4x6x16 EACH	634.0622 POSTS WOOD 4x6x22 EACH	634.0814 POSTS TUBULAR STEEL 2X2X14 EACH	634.0816 POSTS TUBULAR STEEL 2X2X16 EACH	SPV.0060.03 V-LOCK SIGN ANCHORS EACH	REMARKS
50	SEE TYPE I SIGNS										
51	"	J4-1	24" X 36"	6.00	1						USH 10, SEE PLAN SHEET
52	"	R4-7	36" X 48"	12.00		1					
53	"	W2-6	30" X 30"	6.25		1					
53A	"	W13-1	18" X 18"	2.25							15 MPH, MOUNT BELOW SIGN #53A
54	"	R2-1	24" X 30"	5.00	1						45 MPH
55	VACANT										
56	USH 10, E. OF STH 32/57	R1-1	30" X 30"	5.18	1						
57	"	D2-2	84" X 24"	14.00	1	1					SEE SIGN DETAIL
58	"	J1-2	48" X 39"	13.00	1						STH 32, STH 57, SEE PLAN SHEET
	PROJECT TOTALS			671.76	41	17	6	8	2	10	

ERECTION OF PERMANENT SIGNING, TYPE I AND SIGN SUPPORTS

SIGN NO.	LOCATION	SIGN CODE	637.0101 SIGNS, TYPE I W	X	H	S.F.	635.0200 SIGN SUPPORTS STRUCT. STEEL HIGH-STRENGTH LB	636.0100 SIGN SUPPORTS CONCRETE MASONRY CY	636.0500 SIGN SUPPORTS STEEL REINFORCEMENT LB	TYPE/SIZE OF STEEL	REMARKS
7	USH 10, W. OF STH 32/57	D1-62	156"	X	84"	91.00	576	1.2	68	2-TYPE A	SEE SIGN DETAIL
50	USH 10, E. OF STH 32/57	D1-62	156"	X	84"	91.00	576	1.2	68	2-TYPE A	SEE SIGN DETAIL
	TOTAL					182.00	1152	2.40	136		

PLAN SHEET PRODUCED
BY WisDOT - NE REGION

3

REMOVING, TYPE II SIGNS AND REMOVING SMALL SIGN SUPPORTS

SIGN	LOCATION	SIGN CODE	638.2602 REMOVING SIGNS TYPE II EACH	638.3000 REMOVING SMALL SIGN SUPPORTS EACH	REMARKS
100	USH 10, W. OF STH 32/57	D2-2	1	2	
101	"	M1-94	1	2	
102	"	J1-2	3	1	
103	"	R2-1	1	1	
104	"	R2-1	1	1	
105	"	W3-3	1	2	
106	"	W3-3	1	2	
107	USH 10 AT SHADY LANE, W. OF STH 32/57	R1-1	1	1	
108	USH 10, W. OF STH 32/57	J2-3	7	2	
109	"	D1-3	1	2	
110	"	W14-3	1	1	
111	"	I55-56	1		
112	"	R2-1	1	1	REMOVE J4-1 ALSO
113	"	J3-2	6	1	
114	STH 32/57, S. OF USH 10	D2-3	1	2	
115	"	W3-3	1	2	
116	"	R2-1	1		
117	STH 32/57 AT SHADY LANE, S. OF USH 10	R1-1	1	1	
118	STH 32/57, S. OF USH 10	I55-56	1	1	
119	"	W14-3	1	1	
120	"	R59-51	1		
121	"	J4-2	3	1	
122	STH 32/57 AT USH 10	R1-2	1	1	
123	STH 32/57 ISLAND AT USH 10	R1-1F	1		REMOVE FROM TRAFFIC SIGNAL
124	STH 32/57, N. OF USH 10	J3-2	5	1	
125	"	D1-3	2	2	REMOVE R7-1D ALSO
126	"	J2-2	6	1	REMOVE R7-1L ALSO
127	STH 32/57, S. OF USH 10	R2-1	1	1	
128	"	J1-1	2	1	
129	"	W3-3	1	2	

PLAN SHEET PRODUCED
BY WisDOT - NE REGION

3

REMOVING, TYPE II SIGNS AND REMOVING SMALL SIGN SUPPORTS

SIGN	LOCATION	SIGN CODE	638.2602 REMOVING SIGNS TYPE II EACH	638.3000 REMOVING SMALL SIGN SUPPORTS EACH	REMARKS
130	STH 32/57, S. OF USH 10	J2-2	5	1	
131	"	D1-3	1	2	
132	"	J3-2	5	1	
133	STH 32/57 ISLAND AT USH 10	R1-1F	1		REMOVE FROM TRAFFIC SIGNAL
134	STH 32/57 AT USH 10	R1-2	1	1	
135	STH 32/57, N. OF USH 10	W1-2R	2	1	REMOVE R7-1D ALSO
136	"	R7-1D	1	1	
137	STH 32/57, S. OF CEMETERY RD	R7-1R	1	1	
138	"	J4-2	3	1	
139	"	J1-1	2	1	
140	STH 32/57 AT CEMETERY RD	R1-1	1	1	
141	STH 32/57, N. OF CEMETERY RD	I55-56	1	1	
142	"	W3-3	1	1	
143	"	W3-3	1	1	
144	"	R2-1	1	1	
145	"	W1-6	1	1	
146	"	R2-1	1	1	
147	"	D2-3	1	2	
148	USH 10, E. OF STH 32/57	J3-2	6	1	
149	"	R7-1D	1	1	
150	"	R7-1D	1	1	
151	"	D1-3	2	2	REMOVE R7-1D ALSO
152	"	D2-2	2	2	REMOVE R7-1D ALSO
153	"	J4-1	2	1	
154	"	W14-3	1		
155	"	R2-1	1	1	
156	KELLER ST AT USH 10	R1-1	1	1	
157	"	R1-1	1	1	
158	"	J2-3	7	2	
159	USH 10, E. OF STH 32/57	I55-56	1	1	
160	"	W3-3	1	2	
161	"	W3-3	1	2	
162	"	J1-2	3	2	
163	"	R2-1	1	1	
	TOTAL		118	76	

PLAN SHEET PRODUCED
BY WisDOT - NE REGION

3

TRAFFIC CONTROL DETOUR SIGN SUMMARY

SIGN NO.	LOCATION	SIGN CODE	SIZE W X H	NUMBER IN SERVICE	APPROX. SERVICE PERIOD 90 DAYS	643.3000 DETOUR SIGNS DAYS	*** 643.0420 BARRICADES TYPE III DAYS	*** 643.0705 WARNING LIGHTS TYPE A DAYS	643.1050 SIGNS PORTABLE CHANGEABLE MESSAGE DAYS	643.0920 COVERING SIGNS TYPE II Cycles	Signs	EACH	REMARKS
1	1000' N OF J1-1 (JCT K)	W 20-2-A	48"x48"	1	90	90							
2	LT OF J1-1 (JCT K)	MO 4-8	24"x12"	1	90	90							
	"	MO 3-3	24"x12"	1	90	90							
	"	M 1-6-B	24"x24"	1	90	90							32
	"	M 1-6	24"x24"	1	90	90							57
	"	MO 5-1-L	21"x21"	1	90	90							
3	LT OF J13-1 (K - LT)	MO 4-8	24"x12"	1	90	90							
	"	MO 3-3	24"x12"	1	90	90							
	"	M 1-6-B	24"x24"	1	90	90							32
	"	M 1-6	24"x24"	1	90	90							57
	"	MO 6-1	21"x21"	1	90	90							LEFT
4	SW QUAD OF STH 32/57 & CTY K INTERSECTION	R 11-3	60"x30"	1	90	90	90	180					1 MILE
5	BELOW SIGN # 4	MO 4-9-L	30"x24"	1	90	90							
6	JV 4-1									1	1	1	SOUTH 32/57
7	200' E OF STH 32/57 INTERSECTION ON CTY K	MO 4-8	24"x12"	1	90	90							
	"	MO 3-3	24"x12"	1	90	90							
	"	M 1-6-B	24"x24"	1	90	90							32
	"	M 1-6	24"x24"	1	90	90							57
	"	MO 6-1	21"x21"	1	90	90							AHEAD
8	MODIFY J4-2 (32-LT & RT; 57-LT & RT)	M 1-6-B	EXISTING										
	"	MO 6-1	21"x21"	1	90	90							LEFT
	"	M 1-6	EXISTING										
	"	MO 6-1	21"x21"	1	90	90							LEFT
9	MODIFY J1-1 (JCT 32/57)	MO 4-8-A	30"x24"	1	90	90							
	"	MO 50-2	EXISTING										32/57
10	200' W OF BOETTCHER RD INTERSECTION ON CTY K	MO 4-8	24"x12"	1	90	90							
	"	MO 3-1	24"x12"	1	90	90							
	"	M 1-6-B	24"x24"	1	90	90							32
	"	M 1-6	24"x24"	1	90	90							57
	"	MO 6-1	21"x21"	1	90	90							AHEAD
11	200' E OF BOETTCHER RD INTERSECTION ON CTY K	MO 4-8	24"x12"	1	90	90							
	"	MO 3-3	24"x12"	1	90	90							
	"	M 1-6-B	24"x24"	1	90	90							32
	"	M 1-6	24"x24"	1	90	90							57
	"	MO 6-1	21"x21"	1	90	90							AHEAD
12	500' W OF SIGN # 14 ON CTY K	MO 4-8	24"x12"	1	90	90							
	"	MO 3-3	24"x12"	1	90	90							
	"	M 1-6-B	24"x24"	1	90	90							32
	"	M 1-6	24"x24"	1	90	90							57
	"	MO 5-1-R	21"x21"	1	90	90							
13	200' W OF CTY PP INTERSECTION ON CTY K	MO 4-8	24"x12"	1	90	90							
	"	MO 3-1	24"x12"	1	90	90							
	"	M 1-6-B	24"x24"	1	90	90							32
	"	M 1-6	24"x24"	1	90	90							57
	"	MO 6-1	21"x21"	1	90	90							AHEAD

3

TRAFFIC CONTROL DETOUR SIGN SUMMARY

SIGN NO.	LOCATION	SIGN CODE	SIZE W X H	NUMBER IN SERVICE	APPROX. SERVICE PERIOD 90 DAYS	643.3000 DETOUR SIGNS DAYS	*** 643.0420 BARRICADES TYPE III DAYS	*** 643.0705 WARNING LIGHTS TYPE A DAYS	643.1050 SIGNS PORTABLE CHANGEABLE MESSAGE DAYS	643.0920 COVERING SIGNS TYPE II Cycles	Signs	EACH	REMARKS
14	LT OF J13-2 (PP-LT & RT; K-AH)	MO 4-8	24"x12"	1	90	90							
	"	MO 3-3	24"x12"	1	90	90							
	"	M 1-6-B	24"x24"	1	90	90							32
	"	M 1-6	24"x24"	1	90	90							57
	"	MO 6-1	21"x21"	1	90	90							RIGHT
15	BACKSIDE OF J13-1 (K LT& RT) FACING NB TRAFFIC)	MO 4-8	24"x12"	1	90	90							
	"	MO 3-1	24"x12"	1	90	90							
	"	M 1-6-B	24"x24"	1	90	90							32
	"	M 1-6	24"x24"	1	90	90							57
	"	MO 6-1	21"x21"	1	90	90							LEFT
16	LT OF J13-1 (K - LT & RT)	MO 4-8	24"x12"	1	90	90							
	"	MO 3-1	24"x12"	1	90	90							
	"	M 1-6-B	24"x24"	1	90	90							32
	"	M 1-6	24"x24"	1	90	90							57
	"	MO 6-1	21"x21"	1	90	90							LEFT
17	200' S OF CTY K INTERSECTION ON CTY PP	MO 4-8	24"x12"	1	90	90							
	"	MO 3-3	24"x12"	1	90	90							
	"	M 1-6-B	24"x24"	1	90	90							32
	"	M 1-6	24"x24"	1	90	90							57
	"	MO 6-1	21"x21"	1	90	90							AHEAD
18	LT OF J1-1 (JCT K)	MO 4-8	24"x12"	1	90	90							
	"	MO 3-1	24"x12"	1	90	90							
	"	M 1-6-B	24"x24"	1	90	90							32
	"	M 1-6	24"x24"	1	90	90							57
	"	MO 5-1-L	21"x21"	1	90	90							
19	200' N OF HARVESTORE RD INTERSECTION ON CTY PP	MO 4-8	24"x12"	1	90	90							
	"	MO 3-1	24"x12"	1	90	90							
	"	M 1-6-B	24"x24"	1	90	90							32
	"	M 1-6	24"x24"	1	90	90							57
	"	MO 6-1	21"x21"	1	90	90							AHEAD
20	200' S OF HARVESTORE RD INTERSECTION ON CTY PP	MO 4-8	24"x12"	1	90	90							
	"	MO 3-3	24"x12"	1	90	90							
	"	M 1-6-B	24"x24"	1	90	90							32
	"	M 1-6	24"x24"	1	90	90							57
	"	MO 6-1	21"x21"	1	90	90							AHEAD
21	200' S OF W3-1 (STOP AHEAD) SIGN	MO 4-8	24"x12"	1	90	90							
	"	MO 3-3	24"x12"	1	90	90							
	"	M 1-6-B	24"x24"	1	90	90							32
	"	M 1-6	24"x24"	1	90	90							57
	"	MO 5-1-R	21"x21"	1	90	90							
22	150' N OF HWY 10 INTERSECTION ON CTY PP	MO 4-8	24"x12"	1	90	90							
	"	MO 3-1	24"x12"	1	90	90							
	"	M 1-6-B	24"x24"	1	90	90							32
	"	M 1-6	24"x24"	1	90	90							57
	"	MO 6-1	21"x21"	1	90	90							AHEAD

3

TRAFFIC CONTROL DETOUR SIGN SUMMARY

SIGN NO.	LOCATION	SIGN CODE	SIZE W X H	NUMBER IN SERVICE	APPROX. SERVICE PERIOD 90 DAYS	643.3000 DETOUR SIGNS DAYS	*** 643.0420 BARRICADES TYPE III DAYS	*** 643.0705 WARNING LIGHTS TYPE A DAYS	643.1050 SIGNS PORTABLE CHANGEABLE MESSAGE DAYS	643.0920 COVERING SIGNS TYPE II Cycles	Signs	EACH	REMARKS
23	ABOVE J13-2 (10-LT & RT; PP-AH)	MO 4-8	24"x12"	1	90	90							
	"	MO 3-3	24"x12"	1	90	90							
	"	M 1-6-B	24"x24"	1	90	90							32
	"	M 1-6	24"x24"	1	90	90							57
	"	MO 6-1	21"x21"	1	90	90							RIGHT
24	ABOVE J13-2 (10-LT & RT; PP-AH) ((FAR SIDE))	MO 4-8	24"x12"	1	90	90							
	"	MO 3-3	24"x12"	1	90	90							
	"	M 1-6-B	24"x24"	1	90	90							32
	"	M 1-6	24"x24"	1	90	90							57
	"	MO 6-1	21"x21"	1	90	90							RIGHT
25	ABOVE J4-1 (WEST 10)	MO 4-8	24"x12"	1	90	90							
	"	MO 3-3	24"x12"	1	90	90							
	"	M 1-6-B	24"x24"	1	90	90							32
	"	M 1-6	24"x24"	1	90	90							57
	"	MO 6-1	21"x21"	1	90	90							AHEAD
26	100' E OF R1-1 (STOP SIGN) @ HWY 10 & CTY PP	MO 4-8	24"x12"	1	90	90							
	"	MO 3-1	24"x12"	1	90	90							
	"	M 1-6-B	24"x24"	1	90	90							32
	"	M 1-6	24"x24"	1	90	90							57
	"	MO 6-1	21"x21"	1	90	90							LEFT
27	@ LT TURN LANE FOR CTY PP ON HWY 10 (EB)	MO 4-8	24"x12"	1	90	90							
	"	MO 3-1	24"x12"	1	90	90							
	"	M 1-6-B	24"x24"	1	90	90							32
	"	M 1-6	24"x24"	1	90	90							57
	"	MO 6-1	21"x21"	1	90	90							LEFT
28	200' W OF SIGN # 27	MO 4-8	24"x12"	1	90	90							
	"	MO 3-1	24"x12"	1	90	90							
	"	M 1-6-B	24"x24"	1	90	90							32
	"	M 1-6	24"x24"	1	90	90							57
	"	MO 5-1-L	21"x21"	1	90	90							
29	1000' E OF SIGN # 32 IN HWY 10 (WB)	W 20-2-A	48"x48"	1	90	90							
30	500' E OF SIGN # 32 IN HWY 10 (WB)	MO 4-8	24"x12"	1	90	90							
	"	MO 3-4	24"x12"	1	90	90							
	"	M 1-4	24"x24"	1	90	90							10
	"	MO 5-1-L	21"x21"	1	90	90							
31	RT OF SIGN # 30	MO 4-8	24"x12"	1	90	90							
	"	MO 3-3	24"x12"	1	90	90							
	"	M 1-6-B	24"x24"	1	90	90							32
	"	M 1-6	24"x24"	1	90	90							57
	"	MO 5-1-L	21"x21"	1	90	90							
32	@ START OF LT TURN LANE TO CTY HR (RIGHT SIDE)	MO 4-8	24"x12"	1	90	90							
	"	MO 3-4	24"x12"	1	90	90							
	"	M 1-4	24"x24"	1	90	90							10
	"	MO 6-1	21"x21"	1	90	90							LEFT

3

3

TRAFFIC CONTROL DETOUR SIGN SUMMARY

SIGN NO.	LOCATION	SIGN CODE	SIZE W X H	NUMBER IN SERVICE	APPROX. SERVICE PERIOD 90 DAYS	643.3000 DETOUR SIGNS DAYS	*** 643.0420 BARRICADES TYPE III DAYS	*** 643.0705 WARNING LIGHTS TYPE A DAYS	643.1050 SIGNS PORTABLE CHANGEABLE MESSAGE DAYS	643.0920 COVERING SIGNS TYPE II Cycles	Signs	EACH	REMARKS
33	RT OF SIGN # 32	MO 4-8	24"x12"	1	90	90							
	"	MO 3-3	24"x12"	1	90	90							
	"	M 1-6-B	24"x24"	1	90	90							32
	"	M 1-6	24"x24"	1	90	90							57
	"	MO 6-1	21"x21"	1	90	90							LEFT
34	@ START OF LT TURN LANE TO CTY HR (MEDIAN SIDE)	MO 4-8	24"x12"	1	90	90							
	"	MO 3-4	24"x12"	1	90	90							
	"	M 1-4	24"x24"	1	90	90							10
	"	MO 6-1	21"x21"	1	90	90							LEFT
35	RT OF SIGN # 34	MO 4-8	24"x12"	1	90	90							
	"	MO 3-3	24"x12"	1	90	90							
	"	M 1-6-B	24"x24"	1	90	90							32
	"	M 1-6	24"x24"	1	90	90							57
	"	MO 6-1	21"x21"	1	90	90							LEFT
36	200' E OF CTY HR INTERSECTION ON HWY 10 (EB)	MO 4-8	24"x12"	1	90	90							
	"	MO 3-1	24"x12"	1	90	90							
	"	M 1-6-B	24"x24"	1	90	90							32
	"	M 1-6	24"x24"	1	90	90							57
	"	MO 6-1	21"x21"	1	90	90							AHEAD
37	NW QUAD OF US 10 & CTY HR INTERSECTION	R 11-3	60"x30"	1	90	90	90	180					4 MILE
38	BELOW SIGN # 37	MO 4-9-L	30"x24"	1	90	90							
39	J3-1 (W-10-LT)									1	1	1	WEST 10 LEFT
40	RT OF J3-1 (E-10-RT)	MO 4-8	24"x12"	1	90	90							
	"	MO 3-1	24"x12"	1	90	90							
	"	M 1-6-B	24"x24"	1	90	90							32
	"	M 1-6	24"x24"	1	90	90							57
	"	MO 6-1	21"x21"	1	90	90							RIGHT
41	200' W OF HWY 10 INTERSECTION ON CTY HR	MO 4-8	24"x12"	1	90	90							
	"	MO 3-4	24"x12"	1	90	90							
	"	M 1-4	24"x24"	1	90	90							10
	"	MO 6-1	21"x21"	1	90	90							AHEAD
42	RT OF SIGN # 41	MO 4-8	24"x12"	1	90	90							
	"	MO 3-3	24"x12"	1	90	90							
	"	M 1-6-B	24"x24"	1	90	90							32
	"	M 1-6	24"x24"	1	90	90							57
	"	MO 6-1	21"x21"	1	90	90							AHEAD
43	LT OF J1-2 (JCT 10; END HR)	MO 4-8	24"x12"	1	90	90							
	"	MO 3-1	24"x12"	1	90	90							
	"	M 1-6-B	24"x24"	1	90	90							32
	"	M 1-6	24"x24"	1	90	90							57
	"	MO 5-1-R	21"x21"	1	90	90							
44	MODIFY J1-2 (JCT 10; END HR)	MO 4-8-A	24"x18"	1	90	90							
	"	M 1-4	EXISTING										10
45	J4-1 (WEST 10)									1	1	1	WEST 10

3

TRAFFIC CONTROL DETOUR SIGN SUMMARY

SIGN NO.	LOCATION	SIGN CODE	SIZE W X H	NUMBER IN SERVICE	APPROX. SERVICE PERIOD 90 DAYS	643.3000 DETOUR SIGNS DAYS	*** 643.0420 BARRICADES TYPE III DAYS	*** 643.0705 WARNING LIGHTS TYPE A DAYS	643.1050 SIGNS PORTABLE CHANGEABLE MESSAGE DAYS	643.0920 COVERING SIGNS TYPE II Cycles	Signs	EACH	REMARKS
46A	3000' E OF CHURCH RD INTERSECTION ON CTY HR (EB)	MO 4-8	24"x12"	1	90	90							
	"	MO 3-2	24"x12"	1	90	90							
	"	M 1-4	24"x24"	1	90	90							10
	"	MO 6-1	21"x21"	1	90	90							AHEAD
46B	RT OF SIGN # 46A	MO 4-8	24"x12"	1	90	90							
	"	MO 3-1	24"x12"	1	90	90							
	"	M 1-6-B	24"x24"	1	90	90							32
	"	M 1-6	24"x24"	1	90	90							57
	"	MO 6-1	21"x21"	1	90	90							AHEAD
47A	3000' E OF CHURCH RD INTERSECTION ON CTY HR (WB)	MO 4-8	24"x12"	1	90	90							
	"	MO 3-4	24"x12"	1	90	90							
	"	M 1-4	24"x24"	1	90	90							10
	"	MO 6-1	21"x21"	1	90	90							AHEAD
47B	RT OF SIGN # 47A	MO 4-8	24"x12"	1	90	90							
	"	MO 3-3	24"x12"	1	90	90							
	"	M 1-6-B	24"x24"	1	90	90							32
	"	M 1-6	24"x24"	1	90	90							57
	"	MO 6-1	21"x21"	1	90	90							AHEAD
48	MODIFY J1-2 (JCT 32/57)	MO 4-8-A	24"x18"	1	90	90							
	"	MO 50-2	EXISTING										32-57
49	RT OF SIGN # 48	MO 4-8	24"x12"	1	90	90							
	"	MO 3-4	24"x12"	1	90	90							
	"	M 1-4	24"x24"	1	90	90							10
	"	MO 5-1-L	21"x21"	1	90	90							
50	RT OF 51-1 (STOP SIGN) @ HWY 32/57 & CTY HR	MO 4-8	24"x12"	1	90	90							
	"	MO 3-4	24"x12"	1	90	90							
	"	M 1-4	24"x24"	1	90	90							10
	"	MO 6-1	21"x21"	1	90	90							LEFT
51	RT OF SIGN # 50	MO 3-3	24"x12"	1	90	90							
	"	M 1-6-B	24"x24"	1	90	90							32
	"	M 1-6	24"x24"	1	90	90							57
	"	MO 6-1	21"x21"	1	90	90							LEFT
52	NE QUAD OF HWY 32/57 & CTY HR INTERSECTION	R 11-3	60"x30"	1	90	90	90	180					1 1/2 MILES
53	BELOW SIGN # 52	MO 4-9-R	30"x24"	1	90	90							
54	JV 4-1 (N 32/57)									1	1	1	NORTH 32/57
55A	200' E OF HWY 32/57 INTERSECTION ON CTY HR (EB)	MO 4-8	24"x12"	1	90	90							
	"	MO 3-2	24"x12"	1	90	90							
	"	M 1-4	24"x24"	1	90	90							10
	"	MO 6-1	21"x21"	1	90	90							AHEAD
55B	RT OF SIGN # 55A	MO 4-8	24"x12"	1	90	90							
	"	MO 3-1	24"x12"	1	90	90							
	"	M 1-6-B	24"x24"	1	90	90							32
	"	M 1-6	24"x24"	1	90	90							57
	"	MO 6-1	21"x21"	1	90	90							AHEAD

3

3

TRAFFIC CONTROL DETOUR SIGN SUMMARY

SIGN NO.	LOCATION	SIGN CODE	SIZE W X H	NUMBER IN SERVICE	APPROX. SERVICE PERIOD 90 DAYS	643.3000 DETOUR SIGNS DAYS	*** 643.0420 BARRICADES TYPE III DAYS	*** 643.0705 WARNING LIGHTS TYPE A DAYS	643.1050 SIGNS PORTABLE CHANGEABLE MESSAGE DAYS	643.0920 COVERING SIGNS TYPE II Cycles	Signs	EACH	REMARKS
56	RT OF J13-1 (HR-RT)	MO 4-8	24"x12"	1	90	90							
	"	MO 3-2	24"x12"	1	90	90							
	"	M 1-4	24"x24"	1	90	90							10
	"	MO 6-1	21"x21"	1	90	90							RIGHT
57	RT OF SIGN # 56	MO 4-8	24"x12"	1	90	90							
	"	MO 3-1	24"x12"	1	90	90							
	"	M 1-6-B	24"x24"	1	90	90							32
	"	M 1-6	24"x24"	1	90	90							57
	"	MO 6-1	21"x21"	1	90	90							RIGHT
58	LT OF J4-2 (S-32; S-57)	MO 4-8	24"x12"	1	90	90							
	"	MO 3-4	24"x12"	1	90	90							
	"	M 1-4	24"x24"	1	90	90							10
	"	MO 6-1	21"x21"	1	90	90							AHEAD
59	300' S OF SIGN # 56	MO 4-8	24"x12"	1	90	90							
	"	MO 3-2	24"x12"	1	90	90							
	"	M 1-4	24"x24"	1	90	90							10
	"	MO 5-1-R	21"x21"	1	90	90							
60	RT OF SIGN # 59	MO 4-8	24"x12"	1	90	90							
	"	MO 3-1	24"x12"	1	90	90							
	"	M 1-6-B	24"x24"	1	90	90							32
	"	M 1-6	24"x24"	1	90	90							57
	"	MO 5-1-R	21"x21"	1	90	90							
61	500' S OF SIGN # 59	W 20-2-A	48"x48"	1	90	90							
62	200' N OF CTY B INTERSECTION ON HWY 32/57 (NB)	MO 4-8	24"x12"	1	90	90							
	"	MO 3-2	24"x12"	1	90	90							
	"	M 1-4	24"x24"	1	90	90							10
	"	MO 6-1	21"x21"	1	90	90							AHEAD
63	LT OF J4-2 (S-32; S-57) @ CTY B	MO 4-8	24"x12"	1	90	90							
	"	MO 3-4	24"x12"	1	90	90							
	"	M 1-4	24"x24"	1	90	90							10
	"	MO 6-1	21"x21"	1	90	90							AHEAD
64	ABOVE J2-1 (W-114-AH RT)	MO 4-8	24"x12"	1	90	90							
	"	MO 3-4	24"x12"	1	90	90							
	"	M 1-4	24"x24"	1	90	90							10
65	ABOVE J3-1 (W-114-RT)	MO 4-8	24"x12"	1	90	90							
	"	MO 3-4	24"x12"	1	90	90							
	"	M 1-4	24"x24"	1	90	90							10
66	150' N OF HWY 114 ON HWY 32/57	MO 4-8	24"x12"	1	90	90							
	"	MO 3-2	24"x12"	1	90	90							
	"	M 1-4	24"x24"	1	90	90							10
	"	MO 6-1	21"x21"	1	90	90							AHEAD
67	ABOVE J3-1 (W-114-LT)	MO 4-8	24"x12"	1	90	90							
	"	MO 3-4	24"x12"	1	90	90							
	"	M 1-4	24"x24"	1	90	90							10
	"	MO 6-1	21"x21"	1	90	90							LEFT

TRAFFIC CONTROL DETOUR SIGN SUMMARY

SIGN NO.	LOCATION	SIGN CODE	SIZE W X H	NUMBER IN SERVICE	APPROX. SERVICE PERIOD 90 DAYS	643.3000 DETOUR SIGNS DAYS	*** 643.0420 BARRICADES TYPE III DAYS	*** 643.0705 WARNING LIGHTS TYPE A DAYS	643.1050 SIGNS PORTABLE CHANGEABLE MESSAGE DAYS	643.0920 COVERING SIGNS TYPE II Cycles	Signs	EACH	REMARKS
68	ABOVE J2-1 (W-114-AH LT)	MO 4-8	24"x12"	1	90	90							
	"	MO 3-4	24"x12"	1	90	90							
	"	M 1-4	24"x24"	1	90	90							10
	"	MO 5-1-L	21"x21"	1	90	90							
69	150' N OF CALUMET ST INTERSETION ON HWY 32/57	MO 3-4	24"x12"	1	90	90							
	"	M 1-4	24"x24"	1	90	90							10
	"	W 20-2-A	48"x48"	1	90	90							
70	RT OF J2-2 (32 LT & RT; 57 LT & RT)	MO 4-8	24"x12"	1	90	90							
	"	MO 3-2	24"x12"	1	90	90							
	"	M 1-4	24"x24"	1	90	90							10
	"	MO 6-1	21"x21"	1	90	90							LEFT
71	RT OF R1-1 (STOP SIGN) @ HWY 114 & HWY 32/57	MO 4-8	24"x12"	1	90	90							
	"	MO 3-2	24"x12"	1	90	90							
	"	M 1-4	24"x24"	1	90	90							10
	"	MO 6-1	21"x21"	1	90	90							LEFT
72	ABOVE J4-1 (W-114)	MO 4-8	24"x12"	1	90	90							
	"	MO 3-4	24"x12"	1	90	90							
	"	M 1-4	24"x24"	1	90	90							10
	"	MO 6-1	21"x21"	1	90	90							AHEAD
73	250' W OF SIGN # 71	MO 4-8	24"x12"	1	90	90							
	"	MO 3-2	24"x12"	1	90	90							
	"	M 1-4	24"x24"	1	90	90							10
	"	MO 5-1-L	21"x21"	1	90	90							
74	RT OF SIGN # 73	MO 4-8-A	24"x18"	1	90	90							
	"	MO 50-2	48"x24"	1	90	90							32/57
75	RT OF J4-1 (E-114) @ CTY BB (EB)	MO 4-8	24"x12"	1	90	90							
	"	MO 3-2	24"x12"	1	90	90							
	"	M 1-4	24"x24"	1	90	90							10
	"	MO 6-1	21"x21"	1	90	90							AHEAD
76	RT OF SIGN # 75	MO 4-5	24"x12"	1	90	90							
	"	M 1-6-B	24"x24"	1	90	90							32
	"	M 1-6	24"x24"	1	90	90							57
	"	MO 6-1	21"x21"	1	90	90							AHEAD
77	RT OF J4-1 (W-114) @ CTY BB (WB)	MO 4-8	24"x12"	1	90	90							
	"	MO 3-4	24"x12"	1	90	90							
	"	M 1-4	24"x24"	1	90	90							10
	"	MO 6-1	21"x21"	1	90	90							AHEAD
78	200' E OF HARWOOD RD INTERSECTION ON HWY 114 (EB)	MO 4-8	24"x12"	1	90	90							
	"	MO 3-2	24"x12"	1	90	90							
	"	M 1-4	24"x24"	1	90	90							10
	"	MO 6-1	21"x21"	1	90	90							AHEAD
79	RT OF SIGN # 78	MO 4-5	24"x12"	1	90	90							
	"	M 1-6-B	24"x24"	1	90	90							32
	"	M 1-6	24"x24"	1	90	90							57
	"	MO 6-1	21"x21"	1	90	90							AHEAD

3

TRAFFIC CONTROL DETOUR SIGN SUMMARY

SIGN NO.	LOCATION	SIGN CODE	SIZE W X H	NUMBER IN SERVICE	APPROX. SERVICE PERIOD 90 DAYS	643.3000 DETOUR SIGNS DAYS	*** 643.0420 BARRICADES TYPE III DAYS	*** 643.0705 WARNING LIGHTS TYPE A DAYS	643.1050 SIGNS PORTABLE CHANGEABLE MESSAGE DAYS	643.0920 COVERING SIGNS TYPE II Cycles	Signs	EACH	REMARKS
80	200' W OF HARWOOD RD INTERSECTION ON HWY 114 (WB)	MO 4-8	24"x12"	1	90	90							
	"	MO 3-4	24"x12"	1	90	90							
	"	M 1-4	24"x24"	1	90	90							10
	"	MO 6-1	21"x21"	1	90	90							AHEAD
81	ABOVE J2-3 (S-55-AH LT; W-114-AH TILT RT; N-55-AH TILT RT)	MO 4-8	24"x12"	1	90	90							
	"	MO 3-4	24"x12"	1	90	90							
	"	M 1-4	24"x24"	1	90	90							10
	"	MO 5-2-R	21"x21"	1	90	90							
82	ABOVE J2-3 (S-55-LT; W-114-TILT RT; N-55-TILT RT)	MO 4-8	24"x12"	1	90	90							
	"	MO 3-4	24"x12"	1	90	90							
	"	M 1-4	24"x24"	1	90	90							10
	"	MO 6-2	21"x21"	1	90	90							RIGHT
83	ABOVE J3-2 (E-114-TILT LT; S-55-TILT RT)	MO 4-8	24"x12"	1	90	90							
	"	MO 3-2	24"x12"	1	90	90							
	"	M 1-4	24"x24"	1	90	90							10
	"	MO 6-2	21"x21"	1	90	90							LEFT
84	RT OF SIGN # 83	MO 4-5	24"x12"	1	90	90							
	"	M 1-6-B	24"x24"	1	90	90							32
	"	M 1-6	24"x24"	1	90	90							57
	"	MO 6-2	21"x21"	1	90	90							LEFT
85	150' N OF J2-2 (E-114-AH LT; S-55-AH RT)	MO 4-8	24"x12"	1	90	90							
	"	MO 3-2	24"x12"	1	90	90							
	"	M 1-4	24"x24"	1	90	90							10
	"	MO 5-2-L	21"x21"	1	90	90							
86	RT OF SIGN # 85	MO 4-5	24"x12"	1	90	90							
	"	M 1-6-B	24"x24"	1	90	90							32
	"	M 1-6	24"x24"	1	90	90							57
	"	MO 5-2-L	21"x21"	1	90	90							
87	150' S OF JV 4-2 (55/114) @ CTY B (SB)	MO 4-8	24"x12"	1	90	90							
	"	MO 3-2	24"x12"	1	90	90							
	"	M 1-4	24"x24"	1	90	90							10
	"	MO 6-1	21"x21"	1	90	90							AHEAD
88	RT OF SIGN # 87	MO 4-5	24"x12"	1	90	90							
	"	M 1-6-B	24"x24"	1	90	90							32
	"	M 1-6	24"x24"	1	90	90							57
	"	MO 6-1	21"x21"	1	90	90							AHEAD
89	150' N OF JV 4-2 (55/114)	MO 4-8	24"x12"	1	90	90							
	"	MO 3-4	24"x12"	1	90	90							
	"	M 1-4	24"x24"	1	90	90							10
	"	MO 6-1	21"x21"	1	90	90							AHEAD
90	ABOVE J3-2 (55-TILT LT; 114-TILT LT)	MO 4-8	24"x12"	1	90	90							
	"	MO 3-4	24"x12"	1	90	90							
	"	M 1-4	24"x24"	1	90	90							10
	"	MO 6-2	21"x21"	1	90	90							LEFT

3

TRAFFIC CONTROL DETOUR SIGN SUMMARY

SIGN NO.	LOCATION	SIGN CODE	SIZE W X H	NUMBER IN SERVICE	APPROX. SERVICE PERIOD 90 DAYS	643.3000 DETOUR SIGNS DAYS	*** 643.0420 BARRICADES TYPE III DAYS	*** 643.0705 WARNING LIGHTS TYPE A DAYS	643.1050 SIGNS PORTABLE CHANGEABLE MESSAGE DAYS	643.0920 COVERING SIGNS TYPE II Cycles	Signs	EACH	REMARKS
91	ABOVE J3-2 (E-114-RT; S-55-RT)	MO 4-8	24"x12"	1	90	90							
	"	MO 3-2	24"x12"	1	90	90							
	"	M 1-4	24"x24"	1	90	90							10
	"	MO 6-1	21"x21"	1	90	90							RIGHT
92	RT OF SIGN # 91	MO 4-5	24"x12"	1	90	90							
	"	M 1-6-B	24"x24"	1	90	90							32
	"	M 1-6	24"x24"	1	90	90							57
	"	MO 6-1	21"x21"	1	90	90							RIGHT
93	ABOVE J2-2 (W-114-AH; N-55-AH RT)	MO 4-8	24"x12"	1	90	90							
	"	MO 3-4	24"x12"	1	90	90							
	"	M 1-4	24"x24"	1	90	90							10
	"	MO 5-1-R	21"x21"	1	90	90							
94	RT OF D1-1 RAB DIAGRAMTIC (LT-STOMMEL RD ; W-114-AH; N-55-RT)	MO 4-8	24"x12"	1	90	90							
	"	MO 3-4	24"x12"	1	90	90							
	"	M 1-4	24"x24"	1	90	90							10
	"	MO 6-1	21"x21"	1	90	90							RIGHT
95	100' W OF J4-2 (E-114; S-55)	MO 4-8	24"x12"	1	90	90							
	"	MO 3-2	24"x12"	1	90	90							
	"	M 1-4	24"x24"	1	90	90							10
	"	MO 6-1	21"x21"	1	90	90							AHEAD
96	RT OF SIGN # 95	MO 4-5	24"x12"	1	90	90							
	"	M 1-6-B	24"x24"	1	90	90							32
	"	M 1-6	24"x24"	1	90	90							57
	"	MO 6-1	21"x21"	1	90	90							AHEAD
97	ABOVE D1-2 (S-55; E-114) SOUTH SPLITTER ISLAND	MO 4-8	24"x12"	1	90	90							
	"	MO 3-2	24"x12"	1	90	90							
	"	M 1-4	24"x24"	1	90	90							10
	"	MO 6-2	21"x21"	1	90	90							RIGHT
98	RT OF SIGN # 97	MO 4-5	24"x12"	1	90	90							
	"	M 1-6-B	24"x24"	1	90	90							32
	"	M 1-6	24"x24"	1	90	90							57
	"	MO 6-2	21"x21"	1	90	90							RIGHT
99	ABOVE D1-1 (N-55) NORTH SPLITTER ISLAND	MO 4-8	24"x12"	1	90	90							
	"	MO 3-4	24"x12"	1	90	90							
	"	M 1-4	24"x24"	1	90	90							10
	"	MO 6-2	21"x21"	1	90	90							RIGHT
100	LT OF J4-1 (N-55)	MO 4-8	24"x12"	1	90	90							
	"	MO 3-4	24"x12"	1	90	90							
	"	M 1-4	24"x24"	1	90	90							10
	"	MO 6-1	21"x21"	1	90	90							AHEAD
101	200' S OF RAB DIAGRAMTIC (E-114/S-55; AH-STOMMEL RD;W-114)	MO 4-8	24"x12"	1	90	90							
	"	MO 3-2	24"x12"	1	90	90							
	"	M 1-4	24"x24"	1	90	90							10
	"	MO 6-1	21"x21"	1	90	90							LEFT

3

TRAFFIC CONTROL DETOUR SIGN SUMMARY

SIGN NO.	LOCATION	SIGN CODE	SIZE W X H	NUMBER IN SERVICE	APPROX. SERVICE PERIOD 90 DAYS	643.3000 DETOUR SIGNS DAYS	*** 643.0420 BARRICADES TYPE III DAYS	*** 643.0705 WARNING LIGHTS TYPE A DAYS	643.1050 SIGNS PORTABLE CHANGEABLE MESSAGE DAYS	643.0920 COVERING SIGNS TYPE II Cycles	Signs	EACH	REMARKS
102	RT OF SIGN # 101	MO 4-5	24"x12"	1	90	90							
	"	M 1-6-B	24"x24"	1	90	90							32
	"	M 1-6	24"x24"	1	90	90							57
	"	MO 6-2	21"x21"	1	90	90							LEFT
103	200' N OF J1-1 (JCT 114)	MO 4-8	24"x12"	1	90	90							
	"	MO 3-2	24"x12"	1	90	90							
	"	M 1-4	24"x24"	1	90	90							10
	"	MO 5-1-L	21"x21"	1	90	90							
104	RT OF SIGN # 103	MO 4-5	24"x12"	1	90	90							
	"	M 1-6-B	24"x24"	1	90	90							32
	"	M 1-6	24"x24"	1	90	90							57
	"	MO 5-1-L	21"x21"	1	90	90							
105	MODIFY J1-1 (JCT 10)	MO 4-8-A	24"x18"	1	90	90							
	"	M 1-4	EXISTING										10
106	RAB DIAGRAMTIC (W-10; N-55; E-10)									1	1	1	EAST 10
107	D1-3 (AH-KAUKAUNA; LT-APPLETON; MANITOWOC-RT)									1	1	1	MANITOWOC-RT
108	D1-1 (EAST-10-TILT RT) IN EAST SPLITTER ISLAND												EAST-10-TILT RT
109	SW QUAD OF HWY 10 & HWY 55 ROUND-A-BOUT	R 11-3	60"x30"	1	90	90	90	180					6 1/2 MILES
110	BELOW SIGN # 109	MO 4-9-R	30"x24"	1	90	90							
111	500' N OF RAB DIAGRAMTIC (E-10; S-55; W-10)	MO 3-2	24"x12"	1	90	90							
	"	M 1-4	24"x24"	1	90	90							10
	"	W 20-2-A	48"x48"	1	90	90							
112A	RAB DIAGRAMTIC (E-10; S-55; W-10)									1	1	1	EAST 10
112B	ABOVE RAB DIAGRAMTIC (E-10; S-55; W-10)	MO 4-8	24"x12"	1	90	90							
	"	MO 3-2	24"x12"	1	90	90							
	"	M 1-4	24"x24"	1	90	90							10
	"	MO 6-1	21"x21"	1	90	90							AHEAD
113A	D1-3 (AH-FOND DU LAC; LT-MANITOWOC; APPLETON-RT)												LT-MANITOWOC
113B	200' S OF SIGN # 113A	MO 4-8	24"x12"	1	90	90							
	"	MO 3-2	24"x12"	1	90	90							
	"	M 1-4	24"x24"	1	90	90							10
	"	MO 6-1	21"x21"	1	90	90							AHEAD
114	ABOVE D1-1 (S-55-TILT RT) IN SOUTH SPLITTER ISLAND	MO 4-8	24"x12"	1	90	90							
	"	MO 3-2	24"x12"	1	90	90							
	"	M 1-4	24"x24"	1	90	90							10
	"	MO 6-2	21"x21"	1	90	90							RIGHT
115	RT OF SIGN # 114	MO 4-5	24"x12"	1	90	90							
	"	M 1-6-B	24"x24"	1	90	90							32
	"	M 1-6	24"x24"	1	90	90							57
	"	MO 6-2	21"x21"	1	90	90							RIGHT
116	RT OF J4-1 (S-55)	MO 4-8	24"x12"	1	90	90							
	"	MO 3-2	24"x12"	1	90	90							
	"	M 1-4	24"x24"	1	90	90							10
	"	MO 6-1	21"x21"	1	90	90							AHEAD

3

TRAFFIC CONTROL DETOUR SIGN SUMMARY

SIGN NO.	LOCATION	SIGN CODE	SIZE W X H	NUMBER IN SERVICE	APPROX. SERVICE PERIOD 90 DAYS	643.3000 DETOUR SIGNS DAYS	*** 643.0420 BARRICADES TYPE III DAYS	*** 643.0705 WARNING LIGHTS TYPE A DAYS	643.1050 SIGNS PORTABLE CHANGEABLE MESSAGE DAYS	643.0920 COVERING SIGNS TYPE II Cycles	Signs	EACH	REMARKS
117	RT OF SIGN # 116	MO 4-5	24"x12"	1	90	90							
	"	M 1-6-B	24"x24"	1	90	90							32
	"	M 1-6	24"x24"	1	90	90							57
	"	MO 6-2	21"x21"	1	90	90							AHEAD
118	300' E OF RAB DIAGRAMTIC (N-55; E-10; S-55)	MO 4-8	24"x12"	1	90	90							
	"	MO 3-2	24"x12"	1	90	90							
	"	M 1-4	24"x24"	1	90	90							10
	"	MO 6-1	21"x21"	1	90	90							RIGHT
119	RT OF SIGN # 118	MO 4-5	24"x12"	1	90	90							
	"	M 1-6-B	24"x24"	1	90	90							32
	"	M 1-6	24"x24"	1	90	90							57
	"	MO 6-1	21"x21"	1	90	90							RIGHT
120	D1-3 (AH-MANITOWOC; LT-KAUKAUNA; FOND DU LAC-RT)									1	1	1	AH-MANITOWOC
121	RT OF RAB DIAGRAMTIC (N-55; E-10; S-55)	MO 4-8	24"x12"	1	90	90							
	"	MO 3-2	24"x12"	1	90	90							
	"	M 1-4	24"x24"	1	90	90							10
	"	MO 5-1-R	21"x21"	1	90	90							
122	RT OF SIGN # 121	MO 4-5	24"x12"	1	90	90							
	"	M 1-6-B	24"x24"	1	90	90							32
	"	M 1-6	24"x24"	1	90	90							57
	"	MO 5-1-R	21"x21"	1	90	90							
123	RAB DIAGRAMTIC (N-55; E-10; S-55)									1	1	1	EAST 10
124	500' W OF SIGN # 123	W 20-2-A	48"x48"	1	90	90							
125	SE QUAD OF HWY 10 & PETERS RD INTERSECTION	R 11-3	60"x30"	1	90	90	90	180					5 1/2 MILES
126	SE QUAD OF HWY 10 & HARWOOD RD INTERSECTION	R 11-3	60"x30"	1	90	90	90	180					4 1/2 MILES
127	SE QUAD OF HWY 10 & CTY M INTERSECTION	R 11-3	60"x30"	1	90	90	90	180					3 1/2 MILES
128	SE QUAD OF HWY 10 & BRANT ST JOHN RD INTERSECTION	R 11-3	60"x30"	1	90	90	90	180					2 1/2 MILES
129	SE QUAD OF HWY 10 & HARVESTORE RD INTERSECTION	R 11-3	60"x30"	1	90	90	90	180					1 1/2 MILES
130	SE QUAD OF HWY 10 & CTY D/MARX RD INTERSECTION	R 11-3	60"x30"	1	90	90	90	180					1 MILE
131	SE QUAD OF HWY 10 & MICKE RD INTERSECTION	R 11-3	60"x30"	1	90	90	90	180					1/2 MILE
132	FIELD DETERMINED - USH 10 EB (WEST OF INTERSECTION)			1					7				
133	FIELD DETERMINED - USH 10 WB (EAST OF INTERSECTION)			1					7				
134	FIELD DETERMINED - STH 32/57 NB (SOUTH OF INTERSECTION)			1					7				
135	FIELD DETERMINED - STH 32/57 SB (NORTH OF INTERSECTION)			1					7				
	TOTAL			**461**		**41,130**	**990**	**1,980**	**28**			**9**	

*** ADDITIONAL QUANTITIES SHOWN ELSEWHERE

3

Conduit Rigid Nonmetallic Schedule 40

LOCATION USH 10 & STH 32/57		652.0225 2-Inch	652.0235 3-Inch
FROM	TO	LF	LF
CB1	PB1		30
PB1	LB1	30	
PB1	PB2		120
PB2	LB2	10	
PB2	PB3		40
PB3	LB3	180	
LB3	LB4	180	
PB3	PB4		40
PB4	LB5	40	
PB4	PB5		120
PB5	LB6	10	
PB5	PB6		40
PB6	LB7	150	
LB7	LB8	220	
PB6	PB7		40
PB7	LB9	40	
LB9	PB8	110	
PB8	LB10	20	
PB8	PB9		40
PB9	LB11	170	
LB11	LB12	180	
PB9	PB10		40
PB10	LB13	60	
LB13	PB11	90	
PB11	LB14	10	
PB11	PB12		40
PB12	LB15	230	
PB12	PB1		40
	TOTAL	1,730	590

Concrete Bases

	654.0105 Type 5	654.0220 Control Cabinet Type 10 NER
LOCATION	EACH	EACH
USH 10 & STH 32/57	15	1
Total	15	1

Pull Boxes Steel

	653.0140 24x42-Inch
LOCATION	EACH
USH 10 & STH 32/57	12
Total	12

Removing Pull Boxes

	653.0905
LOCATION	EACH
USH 10 & STH 32/57	18
Total	18

Removing Concrete Bases

	204.0195
LOCATION	EACH
USH 10 & STH 32/57	9
Total	9

Electrical Wire Lighting

LOCATION USH 10 & STH 32/57 (240 VOLT SYSTEM)			10AWG 655.0615 Ungrounded Conductor (Black/Red)	10AWG 655.0615 Equipment Grounding Conductor (Green)	12AWG 655.0610 Ungrounded Conductor (Black/Red)	12AWG 655.0610 Equipment Grounding Conductor (Green)
Circuit	FROM	TO	LF	LF	LF	LF
A	CB1	LB1	160	80		
	LB1	Luminaire			100	50
	CB1	PB1		50		
	LB1	LB2	400	200		
	LB2	Luminaire			100	50
	LB2	PB2		30		
	LB2	LB3	540	270		
	LB3	Luminaire			100	50
	LB3	LB4	400	200		
	LB4	Luminaire			100	50
	LB2	PB3		80		
B	CB1	LB5	660	330		
	LB5	Luminaire			100	50
	LB5	PB4		60		
	LB5	LB6	420	210		
	LB6	Luminaire			100	50
	LB6	PB5		30		
	LB6	LB7	280	140		
	LB7	Luminaire			100	50
	LB7	LB8	480	240		
	LB8	Luminaire			100	50
	LB6	PB6		80		
C	CB1	LB9	1120	560		
	LB9	Luminaire			100	50
	LB9	PB7		60		
	LB9	LB10	320	160		
	LB10	Luminaire			100	50
	LB10	PB8		40		
	LB10	LB11	540	270		
	LB11	Luminaire			100	50
	LB11	LB12	400	200		
	LB12	Luminaire			100	50
	LB10	PB9		90		
D	CB1	LB14	340	170		
	LB14	Luminaire			100	50
	LB14	PB11		30		
	LB14	LB13	260	130		
	LB13	Luminaire			100	50
	LB13	PB10		80		
	LB14	PB12		80		
	LB14	LB15	620	310		
		SUB-TOTALS	6,940	4,180	1,400	700
		TOTAL	11,120		2,100	

3

3

Lighting Summary

LOCATION	656.0200 Electrical Service Meter Breaker Pedestal (USH 10 & STH 32/57) LS	657.0255 Transformer Bases Standard 11 1/2-Inch Bolt Circle EACH	657.0322 Poles Type 5 (Aluminum) EACH	657.0710 Luminaire Arms Truss Type 4 1/2-Inch Clamp 12-FT EACH	SPV.0060.13 LED Luminaire LED-A EACH
USH 10 & STH 32/57	1	15	15	15	15
Total	1	15	15	15	15

Remove Traffic Signal

LOCATION	SPV.0105.01 LS
USH 10 & STH 32/57	1
TOTALS	1

CONSTRUCTION STAKING SUMMARY

STATION	-	STATION	LOCATION	650.4000 STORM SEWER EACH	650.4500 SUBGRADE LF	650.5000 BASE LF	650.5500 CURB GUTTER AND CURB & GUTTER LF	650.6000 PIPE CULVERTS EACH	650.9910 SUPPLEMENTAL CONTROL PROJECT 1500-32-71 LS	650.9920 SLOPE STAKES LF
114+00	-	118+63	USH 10 'EB'	14	463	463	909	---		463
130+52	-	140+00	USH 10 'EB'	8	948	948	1,104	---		948
114+00	-	118+64	USH 10 'WB'	--	464	464	---	---		464
130+52	-	140+00	USH 10 'WB'	---	948	948	---	---		948
147+25	-	157+10	STH 32/57 'NB'	14	985	985	913	---		985
158+82	-	170+00	STH 32/57 'NB'	9	1,118	1,118	689	2		1,118
147+25	-	157+11	STH 32/57 'SB'	---	986	986	---	---		986
158+80	-	170+00	STH 32/57 'SB'	---	1,120	1,120	---	---		1,120
10+00	-	13+27	'RA'	2	327	327	1,630	---		327
10+00	-	12+25	CEMETERY RD	---	225	225	150	3		225
2+85	-	5+58	PEACH TREE	---	273	273	---	---		273
			PROJECT						1	
			PROJECT TOTALS	47	7,857	7,857	5,395	5	1	7,857

SAWCUTS

STATION	OFFSET	LOCATION	690.0150 SAWING ASPHALT LF	690.0250 SAWING CONCRETE LF	REMARKS
CATEGORY 0010					
114+00	RT/LT	USH 10 EB	30	---	PROJECT LIMITS
117+16	RT	USH 10 EB	18	---	PRIVATE DWY
137+89	RT	USH 10 EB	192	---	KELLER RD
140+00	RT/LT	USH 10 EB	30	---	PROJECT LIMITS
147+25	RT/LT	STH 32/57 NB	24	---	PROJECT LIMITS
147+95	LT	STH 32/57 NB	28	---	SHADY LANE
156+00	RT	STH 32/57 NB	---	175	PRIVATE DWY
159+70	RT	STH 32/57 NB	46	---	PRIVATE DWY
160+78	RT	STH 32/57 NB	60	---	PARKING LOT
170+00	RT/LT	STH 32/57 NB	24	---	PROJECT LIMITS
12+25	RT/LT	CEMETERY RD	22	---	PROJECT LIMITS
2+85	RT/LT	PEACH TREE LN	18	---	PROJECT LIMITS
5+58	RT/LT	PEACH TREE LN	18	---	PROJECT LIMITS
		PROJECT TOTALS	510	175	

SURVEY

LOCATION	621.0100 LANDMARK REFERENCE EACH	SPV.0060.02 SECTION CORNER MONUMENTS EACH
CATEGORY 0010		
1500-32-71	4	1
PROJECT TOTAL	4	1

3

PROPOSED SANITARY MANHOLES

STATION	OFFSET	PR RIM	PR INV	SPV.0200.02 48" PRECAST SANITARY SEWER MANHOLE V.F.
117+40 WB	17.3' LT	837.34	826.09	11.25
12+74 RA	37.3' RT	837.9	825.13	12.77
156+39 NB	36.4' RT	837.13	825.97	11.16
PROJECT TOTAL				35.18

PROPOSED SANITARY SEWER

STATION TO	STATION	SPV.0090.05 8" SANITARY SEWER L.F.
117+40 WB	12+74 RA	264
12+74 RA	156+39 NB	197
PROJECT TOTAL		461

PROPOSED WATERMAIN

STATION TO	STATION	PR ELEVATION	SPV.0090.06 8" WATERMAIN L.F.
115+75 WB	116+40 WB	825.75 (4.0' MIN. BURY DEPTH UNDER BOX CULVERT)	65
117+42 WB	12+73 RA	831.00 (6.5' MIN. BURY DEPTH)	273
12+73 RA	156+27 NB	831.00 (6.5' MIN BURY DEPTH)	217
PROJECT TOTAL			490

PROPOSED WATER VALVES

STATION	OFFSET	PR ELEVATION	SPV.0060.11 8" WATER VALVE EACH
12+65 RA	39.5' RT	826.09	1
PROJECT TOTAL			1

3

EXISTING SANITARY MANHOLES

STATION	OFFSET	EX ELEVATION	PR ELEVATION	SPV.0200.01 RECONSTRUCTING SANITARY MANHOLES V.F	SPV.0060.05 REMOVING SANITARY MANHOLES EACH	SPV.0060.12 ABANDONING SANITARY MANHOLES EACH
110+56 EB	26.0' LT	838.65	839.6	0.95	-	-
114+11 EB	45.1' RT	837.06	834.32	2.74	-	-
114+08 EB	34.6' LT	836.56	837.93	1.37	-	-
118+48 EB	33.6' LT	-	-	-	-	1
130+53 EB	78.4' LT	-	-	-	1	-
133+53 EB	66.8' LT	833.74	832.69	1.05	-	-
137+51 EB	64.6' LT	831.88	831.88	0	-	-
139+36 EB	64.7' LT	831.76	831.76	0	-	-
139+95 EB	67.7' LT	830.92	830.92	0	-	-
155+36 NB	25.8' RT	835.87	839.22	3.35	-	-
157+39 NB	22.9' RT	-	-	-	-	1
PROJECT TOTAL				9.45	1	2

WATERMAIN ADJUSTMENTS

STATION	OFFSET	EX ELEVATION	PR ELEVATION	SPV.0060.07 ADJUSTING WATER MAIN VALVE BOXES EACH	SPV.0060.06 REMOVING WATER MAIN VALVE BOXES EACH	SPV.0060.08 ADJUSTING WATER LATERAL CURB STOP BOXES EACH
112+98 EB	64.2' LT	835.52	NO ADJUSTMENT	-	-	-
114+19 EB	41.7' LT	835.57	836.98	1	-	-
118+43 EB	41.1' LT	-	-	-	1	-
130+59 EB	83.8' LT	-	-	-	1	-
133+33 EB	76.7' LT	832.45	NO ADJUSTMENT	-	-	-
154+66 NB	38.5' RT	836.65	836.43	-	-	1
155+20 NB	35.8' RT	834.64	836.85	1	-	-
PROJECT TOTAL				2	2	1

SANITARY SEWER / WATERMAIN REMOVALS

STATION TO	STATION	SPV.0090.04 ABANDONING 8" WATERMAIN L.F.	SPV.0090.03 ABANDONING 8" SANITARY SEWER L.F.	SPV.0090.07 REMOVING WATER LATERAL L.F.
115+75 WB	116+40 WB	65	-	-
117+42 WB	12+73 RA	244	-	-
12+73 RA	156+27 NB	213	-	-
117+40 WB	12+74 RA	-	240	-
12+74 RA	156+39 NB	-	194	-
117+96 WB	117+96 WB	-	-	94
PROJECT TOTAL		522	434	94

WATERMAIN HYDRANT AND CURB STOP RELOCATION

EXISTING LOCATION	PR LOCATIONS	PR ELEVATION (HYDRANT = FLANGE EL CURB STOP = TOP OF BOX	SPV.0060.09 RELOCATING HYDRANTS EACH	SPV.0060.10 RELOCATING CURB STOPS EACH
114+23 EB, 48.6' RT	114+23 EB, 59.0' RT	835.93	1	-
114+18 EB, 60.2' LT	NO ADJUSTMENT	-	-	-
116+22 EB, 66.4' LT	116+75 EB, 92.0' LT	835.8	1	-
133+33 EB, 83.9' LT	NO ADJUSTMENT	-	-	-
155+19 NB, 42.0' RT	155+19 NB, 64.5' RT	837.5	1	-
155+95 NB, 48.4' RT	155+95 NB, 67.0' RT	836.8	-	1
PROJECT TOTAL			3	1

* ALL ITEMS ON THIS PAGE ARE CATEGORY 0040

NOTE: THIS SHEET WAS PREPARED BY ROBERT E. LEE AND ASSOCIATES FOR FOREST JUNCTION UTILITIES. SHEET 1 OF 1

TRANSPORTATION PROJECT PLAT NO: 1500-32-21 - 4.01

THAT PART OF LOTS 1 AND 2 OF CALUMET COUNTY CSM 1558 IN AND INCLUDING THE SOUTHEAST QUARTER OF THE SOUTHWEST QUARTER AND THAT PART OF LOT 2 OF CALUMET COUNTY CSM 1354, LOT 1 OF CALUMET COUNTY CSM 1798 IN AND INCLUDING THE SOUTHWEST QUARTER OF THE SOUTHEAST QUARTER OF SECTION 7, AND THAT PART OF CALUMET COUNTY CSM 499 IN AND INCLUDING THE NORTHEAST QUARTER OF THE NORTHWEST QUARTER, AND THAT PART OF LOTS 1 AND 2 OF CALUMET COUNTY CSM 1350 IN AND INCLUDING THE NORTHWEST QUARTER OF THE NORTHEAST QUARTER OF SECTION 18, ALL IN T20N, R20E, IN THE TOWN OF BRILLION, CALUMET COUNTY, WISCONSIN.

RELOCATION ORDER USH 10 CALUMET COUNTY

TO PROPERLY ESTABLISH, LAY OUT, WIDEN, ENLARGE, EXTEND, CONSTRUCT, RECONSTRUCT, IMPROVE, OR MAINTAIN A PORTION OF THE HIGHWAY DESIGNATED ABOVE, THE STATE OF WISCONSIN DEPARTMENT OF TRANSPORTATION DEEMS IT NECESSARY TO RELOCATE OR CHANGE SAID HIGHWAY AND ACQUIRE CERTAIN LANDS AND INTERESTS OR RIGHTS IN LANDS FOR THE ABOVE PROJECT.

TO EFFECT THIS CHANGE, PURSUANT TO AUTHORITY GRANTED UNDER SECTION 84.02 (3) AND 84.09, WISCONSIN STATUTES, THE DEPARTMENT OF TRANSPORTATION HEREBY ORDERS THAT:

1. THAT PORTION OF SAID HIGHWAY AS SHOWN ON THIS PLAT IS LAID OUT AND ESTABLISHED TO THE LINES AND WIDTHS AS SO SHOWN FOR THE ABOVE PROJECT.
2. THE LANDS OR INTERESTS OR RIGHTS IN LANDS AS SHOWN ON THIS PLAT ARE REQUIRED BY THE DEPARTMENT FOR THE ABOVE PROJECT AND SHALL BE ACQUIRED IN THE NAME OF THE STATE OF WISCONSIN, PURSUANT TO THE PROVISIONS OF SECTION 84.09 (1) OR (2), WISCONSIN STATUTES.

CONVENTIONAL ABBREVIATIONS

ACCESS POINT	AP	REFERENCE LINE	R/L
ACCESS RIGHTS	AR	REMAINING	REM.
ACRES	AC.	RIGHT-OF-WAY	R/W
AND OTHERS	ET.AL.	SECTION	SEC.
CENTERLINE	C/L	STATION	STA.
CERTIFIED SURVEY MAP	CSM	TEMPORARY LIMITED EASEMENT	TLE
CORNER	COR.	VOLUME	VOL
CONVEYANCE OF RIGHTS	CR		
DOCUMENT	DOC.	CURVE DATA	
EASEMENT	EASE.		
LAND CONTRACT	LC	LONG CHORD	LC
MONUMENT	MON.	LONG CHORD BEARING	LCB
PAGE	PG	RADIUS	R
PERMANENT LIMITED EASEMENT	PLE	DEGREE OF CURVE	D
PROPERTY LINE	P/L	CENTRAL ANGLE OR DELTA	Δ
RECORDED AS	(100')	LENGTH OF CURVE	L
		TANGENT	T

CONVENTIONAL SYMBOLS

FOUND IRON PIPE/PIN (SIZE/TYPE NOTED)
R/W MONUMENT (●SET)
R/W STANDARD (▲SET)
SIGN
SECTION CORNER MONUMENT
FEE (HATCH VARIES)
TEMPORARY LIMITED EASEMENT
PERMANENT LIMITED EASEMENT
R/W BOUNDARY POINT (RWB20)
PARCEL NUMBER (102)
SIGN NUMBER (21)
BUILDING
BUILDING TO BE RAZED

PROPOSED R/W LINE
EXISTING H.E. LINE
PROPERTY LINE
LOT & TIE LINES
SLOPE INTERCEPTS
CORPORATE LIMITS
ACCESS RESTRICTED (BY PREVIOUS PROJECT/CONTROL)
NO ACCESS (BY ACQUISITION)
NO ACCESS (BY STATUTORY AUTHORITY)
SECTION LINE
QUARTER LINE
SIXTEENTH LINE
EXISTING CENTERLINE
PROPOSED REFERENCE LINE
PARALLEL OFFSET

CONVENTIONAL UTILITY SYMBOLS

WATER — W
GAS — G
TELEPHONE — T
OVERHEAD TRANSMISSION LINES — OH
ELECTRIC — E
CABLE TELEVISION — TV
FIBER OPTIC — FO
SANITARY SEWER — SAN
STORM SEWER — SS
POWER POLE (NON COMPENSABLE / COMPENSABLE)
TELEPHONE POLE
TELEPHONE PEDESTAL
ELECTRIC TOWER
SECTION CORNER
SIGN

ROAD NAME	BASIS OF EXISTING R/W	YEAR
USH 10	FEDERAL AID PROJECT NO. 424-G	1933
USH 10	STATE AID NO. 3388	1934
USH 10	D.O.T. PROJECT NO. 1500-11-21	1993
STH 57	FEDERAL AID PROJECT NO. 465-B	1933
STH 57	D.O.T. PROJECT NO. 1505-03-21	1977

SCHEDULE OF LANDS AND INTEREST

"OWNERS" NAMES ARE SHOWN FOR REFERENCE PURPOSES, ONLY, AND ARE SUBJECT TO CHANGE PRIOR TO TRANSFER OF LAND INTERESTS TO THE DEPARTMENT OF TRANSPORTATION.

PARCEL NO.	OWNER	INTEREST REQUIRED	AREA ACRES REQUIRED NEW	EXISTING	TOTAL	TLE AREA
1	GREAT LAKES COMMUNITIES WISCONSIN, LLC	FEE TLE	0.32 AC	---	0.32 AC	0.23 AC
3	RICHARAD DEXTER AND JUDITH DEXTER	FEE	0.07 AC	---	0.07 AC	---
4	SUNFLOWER INVESTMENTS, LLC	FEE TLE	0.57 AC	---	0.57 AC	0.09 AC
6	P&P INVESTMENTS, A WISCONSIN PARTNERSHIP	FEE TLE	0.01 AC	---	0.01 AC	0.17 AC
7	NORMA GOSHA	FEE	0.44 AC	---	0.44 AC	---
8	THOMAS R. VANDELOO & EILEEN A. RUEDEN	FEE TLE	0.07 AC	---	0.07 AC	0.01 AC
11	FRANCIS HAMMER AND JOHN HAMMER	FEE TLE	0.01 AC	---	0.01 AC	0.01 AC
12	FOREST ASSEMBLY GROUNDS UNITED METHOD CHURCH	FEE TLE	0.04 AC	---	0.04 AC	82 SQ FT
13	JAMES W. FAULDS	FEE TLE	0.21 AC	---	0.21 AC	0.03 AC
14	JEFFERY S. WIERICHS	TLE	---	---	---	74 SQ FT
16	JOHN WILLIAM HAMMEN	FEE	0.04 AC	---	0.04 AC	---
17	SVM, LLC	FEE TLE	0.08 AC	---	0.08 AC	0.02 AC
90	WISCONSIN PUBLIC SERVICE CORPORATION - ELECTRIC	RELEASE OF RIGHTS	---	---	---	---
91	TDS	RELEASE OF RIGHTS	---	---	---	---
92	WE ENERGIES - ELECTRIC	RELEASE OF RIGHTS	---	---	---	---
93	AMERICAN TRANSMISSION COMPANY	RELEASE OF RIGHTS	---	---	---	---
95	WISCONSIN PUBLIC SERVICE CORPORATION - GAS	RELEASE OF RIGHTS	---	---	---	---

ENCUMBRANCE TABLE

PARCEL AFFECTED	UTILITY FACILITY	INTEREST	RECORD LOCATION
1	90 WISCONSIN PUBLIC SERVICE CORPORATION	UTILITY EASEMENT	JACKET 3642, IMAGE 3 AS DOC. 211720 & JACKET 689, IMAGE 45 AS DOC. 169251
1	91 TDS	EASEMENT	JACKET 689, IMAGE 45 AS DOC. 169251
1, 3, 4, 12, 14	91 TDS	EASEMENT	VOLUME "V" OF MISC. PAGE 91 AS DOC. 95287
4	90 WISCONSIN PUBLIC SERVICE CORP. - ELECTRIC	UTILITY EASEMENT	JACKET 2049, IMAGE 42 AS DOC. 222946
4, 14, 16	92 WE ENERGIES - ELECTRIC	UTILITY EASEMENT	VOLUME 112, PAGE 391 AS DOC. 118640
6, 8	91 TDS	EASEMENT	VOLUME 180, PAGE 642 AS DOC. 156692
7	91 TDS	EASEMENT	JACKET 2741, IMAGE 48 AS DOC. 240568
13	90 WISCONSIN PUBLIC SERVICE CORPORATION	GRANT FOR TRANSMISSION LINE	VOLUME "V", PAGE 9
14	93 AMERICAN TRANSMISSION COMPANY, LLC	ASSIGNMENT OF EASEMENT	JACKET 5347, IMAGE 1 AS DOC. 310209
17	95 WISCONSIN PUBLIC SERVICE CORPORATION - GAS	GAS MAIN EASEMENT	JACKET 519, IMAGE 27-28 AS DOC. 174783

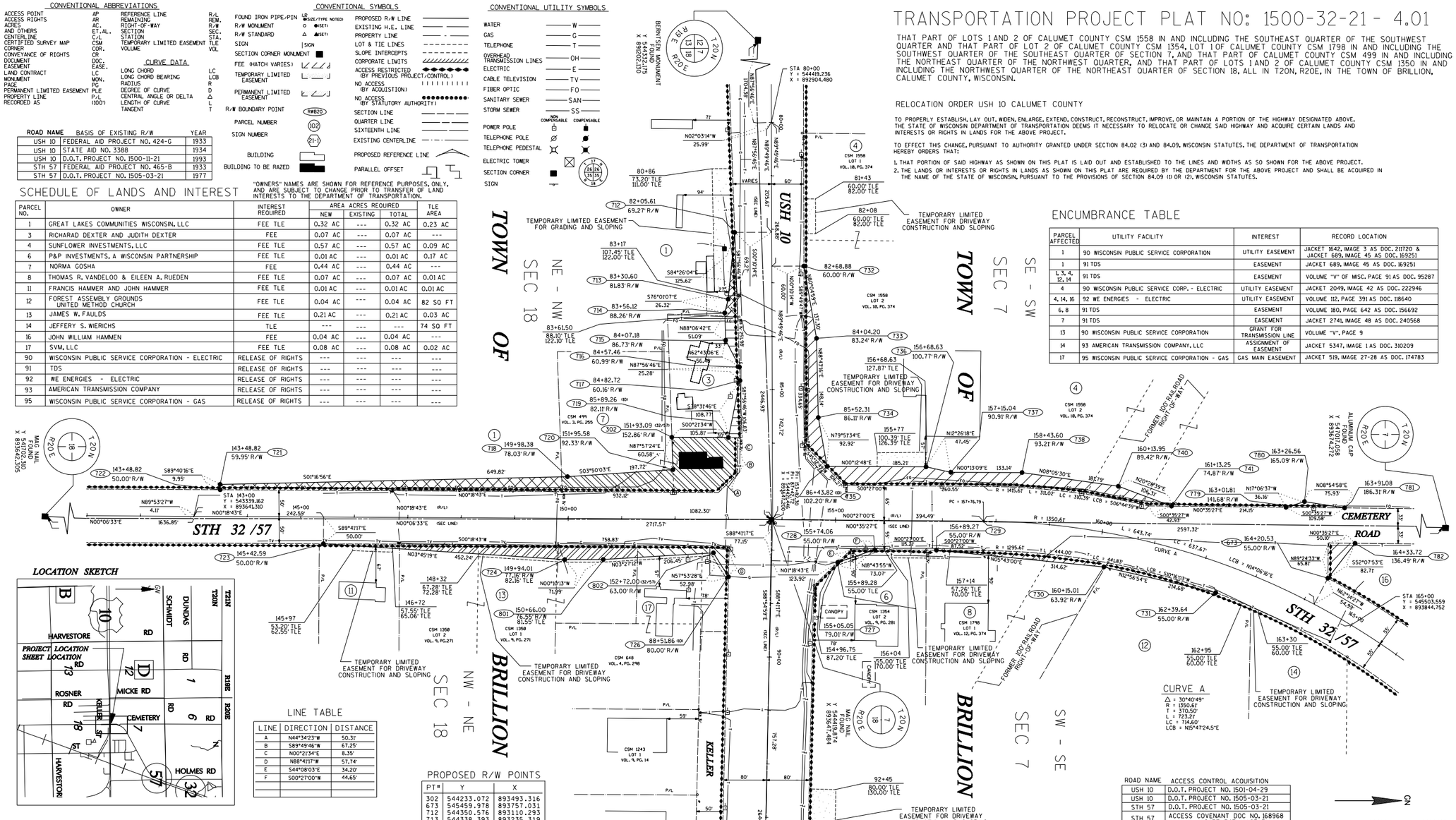

LINE TABLE

LINE	DIRECTION	DISTANCE
A	N44°34'23"W	50.31'
B	S89°49'46"W	67.25'
C	N00°21'34"E	8.35'
D	N88°41'17"W	57.74'
E	S44°08'03"E	34.20'
F	S00°27'00"W	44.65'

PROPOSED R/W POINTS

PT #	Y	X
302	544233.072	893493.316
673	545459.978	893757.031
712	544350.576	893110.293
713	544338.393	893235.319
714	544332.035	893260.856
715	544333.718	893311.917
716	544359.608	893362.116
717	544360.514	893387.378
718	544037.956	893567.080
719	544338.882	893493.980
720	544235.232	893553.859
721	543388.303	893581.622
722	543388.246	893591.576
723	543581.472	893692.629
724	544032.744	893722.249
726	544338.968	893754.480
727	544543.571	893727.170
728	544612.769	893703.705
729	544727.974	893704.610
730	545041.030	893735.949
731	545250.245	893784.059
732	544480.036	893173.178
733	544503.683	893308.428
734	544506.989	893456.529
735	544523.348	893547.997
736	544708.554	893548.687
737	544754.886	893558.906
738	544858.007	893559.301
740	545068.012	893585.003
741	545118.890	893602.591
779	545381.741	893624.403
780	545416.299	893613.765
781	545491.313	893625.533
782	545510.750	893691.737
801	544104.734	893722.035
802	544310.805	893709.599

NOTES:

COORDINATES AND BEARINGS ON THIS PLAT ARE REFERENCED TO THE WISCONSIN COUNTY COORDINATE SYSTEM, CALUMET COUNTY, NAD 83 (1991) ADJUSTMENT. THE COORDINATES SHOWN ARE GRID COORDINATES AND ARE TO BE USED AS GRID OR GROUND VALUES ON THIS PLAT.

RIGHT-OF-WAY MONUMENTS ARE 3/4-INCH BY 24-INCH IRON REBAR AND WILL BE PLACED PRIOR TO THE COMPLETION OF THE PROJECT.

RIGHT-OF-WAY BOUNDARIES ARE DEFINED WITH COURSES OF THE PERIMETER OF THE HIGHWAY LANDS REFERENCED TO THE U.S. PUBLIC LAND SURVEY OR OTHER SURVEYS OF RECORD.

PROPERTY LINES SHOWN ON THIS PLAT ARE DRAWN FROM MAPS AND DOCUMENTS OF PUBLIC RECORD AND/OR EXISTING OCCUPATIONAL LINES. EXCLUDING RIGHT-OF-WAY BOUNDARIES, THIS PLAT MAY NOT BE A TRUE REPRESENTATION OF EXISTING PROPERTY LINES AND SHOULD NOT BE USED AS A SUBSTITUTE FOR AN ACCURATE FIELD SURVEY.

DIMENSIONS FOR THE NEW RIGHT-OF-WAY IS MEASURED ALONG AND PERPENDICULAR TO THE NEW REFERENCE LINES.

THE REFERENCE LINE ON THIS TPP IS BASED ON THE REFERENCE LINE FROM EXISTING RIGHT-OF-WAY PLATS AND DOES NOT MATCH THE REFERENCE LINE ON THE CONSTRUCTION PLANS

A TEMPORARY LIMITED EASEMENT (TLE) IS A RIGHT FOR CONSTRUCTION PURPOSES, AS DEFINED HEREIN, INCLUDING THE RIGHT TO OPERATE NECESSARY EQUIPMENT THEREON AND THE RIGHT OF INGRESS AND EGRESS, AS LONG AS REQUIRED FOR SUCH PUBLIC PURPOSE, INCLUDING THE RIGHT TO PRESERVE, PROTECT, REMOVE, OR PLANT THEREON ANY VEGETATION THAT THE HIGHWAY AUTHORITIES MAY DEEM NECESSARY OR DESIRABLE TO PREVENT EROSION OF THE SOIL. ALL TEMPORARY LIMITED EASEMENTS EXPIRE AT THE COMPLETION OF THE CONSTRUCTION PROJECT FOR WHICH THIS INSTRUMENT IS GIVEN.

ROAD NAME	ACCESS CONTROL ACQUISITION
USH 10	D.O.T. PROJECT NO. 1501-04-29
USH 10	D.O.T. PROJECT NO. 1505-03-21
STH 57	D.O.T. PROJECT NO. 1505-03-21
STH 57	ACCESS COVENANT DOC NO. 168968 IN JACKET 347 IMAGE 7

0 100' 200'
SCALE, FEET

OMNNI ASSOCIATES
ONE SYSTEMS DRIVE
APPLETON, WI 54914-1654
PHONE (920) 735-6900
FAX (920) 830-6100

I, PAUL D. NORDWIG, REGISTERED LAND SURVEYOR, HEREBY CERTIFY THAT IN FULL COMPLIANCE WITH THE PROVISIONS OF SECTION 84.095 OF THE WISCONSIN STATUTES AND UNDER THE DIRECTION OF THE DEPARTMENT, I HAVE SURVEYED TRANSPORTATION PROJECT PLAT 1500-32-21 - 4.01 AND THAT SUCH PLAT CORRECTLY REPRESENTS ALL EXTERIOR BOUNDARIES OF THE SURVEYED LAND.

WISCONSIN PAUL D. NORDWIG 2784 WRIGHTSTOWN WI LAND SURVEYOR

(SIGNATURE) Paul D. Nordwig DATE 6-7-2010
(PRINTED NAME) PAUL D. NORDWIG
(REGISTRATION NO.) S-2784

THIS PLAT AND RELOCATION ORDER ARE APPROVED FOR THE WISCONSIN DEPARTMENT OF TRANSPORTATION
(SIGNATURE) Norman H. Pawelczyk DATE 6-17-2010
(PRINTED NAME) NORMAN H. PAWELCZYK

RESERVED FOR REGISTER OF DEEDS
PROJECT NUMBER 1500-32-21-4.01
AMENDMENT NO:

ACCEPTED FOR RECORDING AND FILING IN THE OFFICE OF THE REGISTER OF DEEDS IN CALUMET COUNTY, WISCONSIN AT 11:19 AM ON JUNE 23, 2010 AS DOCUMENT # 454047 AND ___ FILED IN VOL. D OF PLATS, P. 42

SIGNATURE OF REGISTER OF DEEDS

RECORDING INFORMATION VIA PHONE CALL JUNE 30, 2010

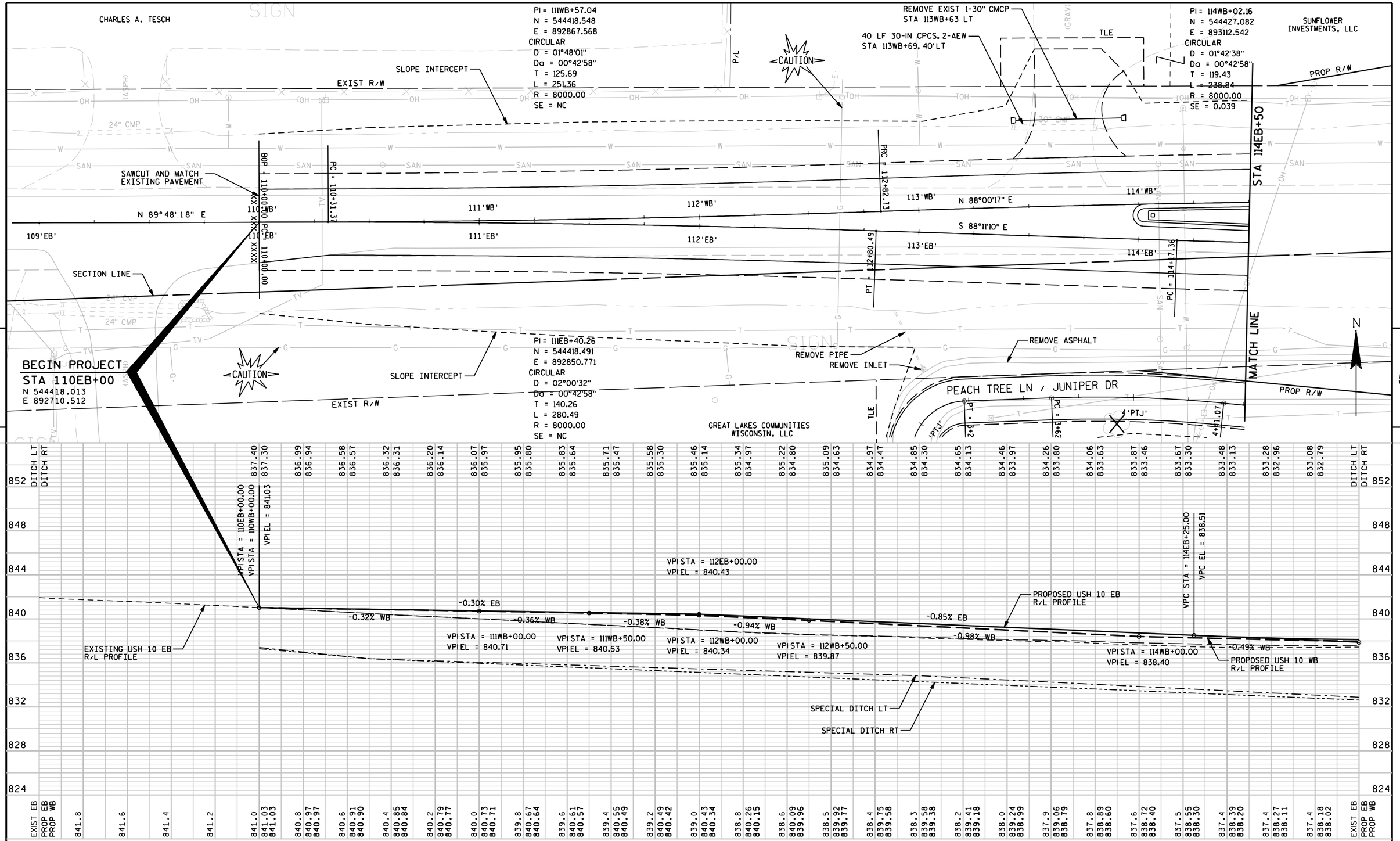

PROJECT NO:1500-32-71	HWY:USH 10	COUNTY:CALUMET	PLAN AND PROFILE: USH 10 WEST EASTBOUND	SHEET 96	E

BENCH MARK TABLE

NO.	STATION	DESCRIPTION	ELEV.
1	116EB+22, 66' LT	ARROW ON FLANGE OF FIRST HYDRANT WEST OF STH 32/57 ON NORTH SIDE OF USH 10	836.69
2	118EB+01, 60' LT	60D NAIL IN POWER POLE #2020-7L1 AT THE NW CORNER OF THE INTERSECTION OF USH 10 & STH 32/57	835.26

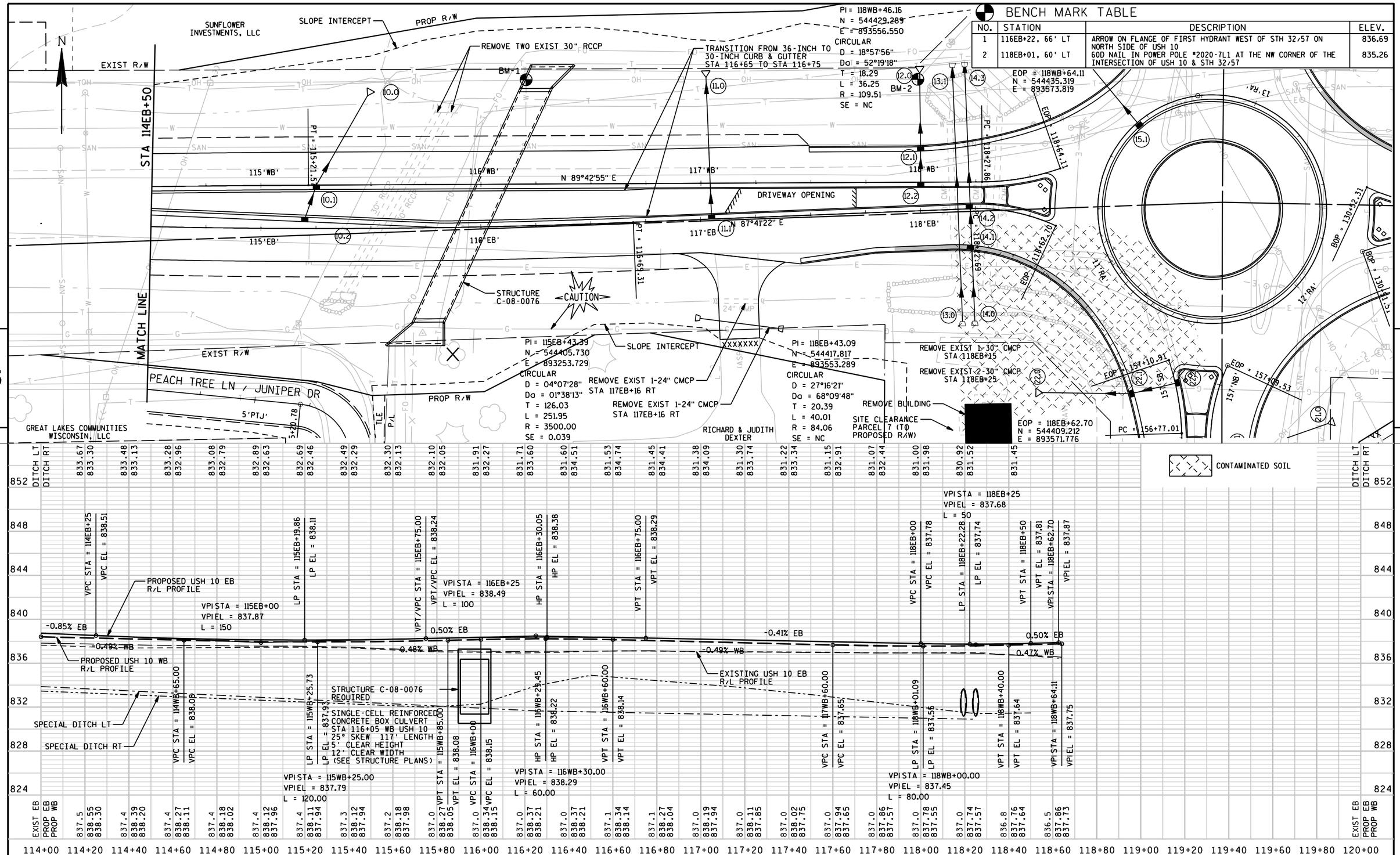

PROJECT NO:1500-32-71	HWY:USH 10	COUNTY:CALUMET	PLAN AND PROFILE: USH 10 WEST EASTBOUND	SHEET 97	E

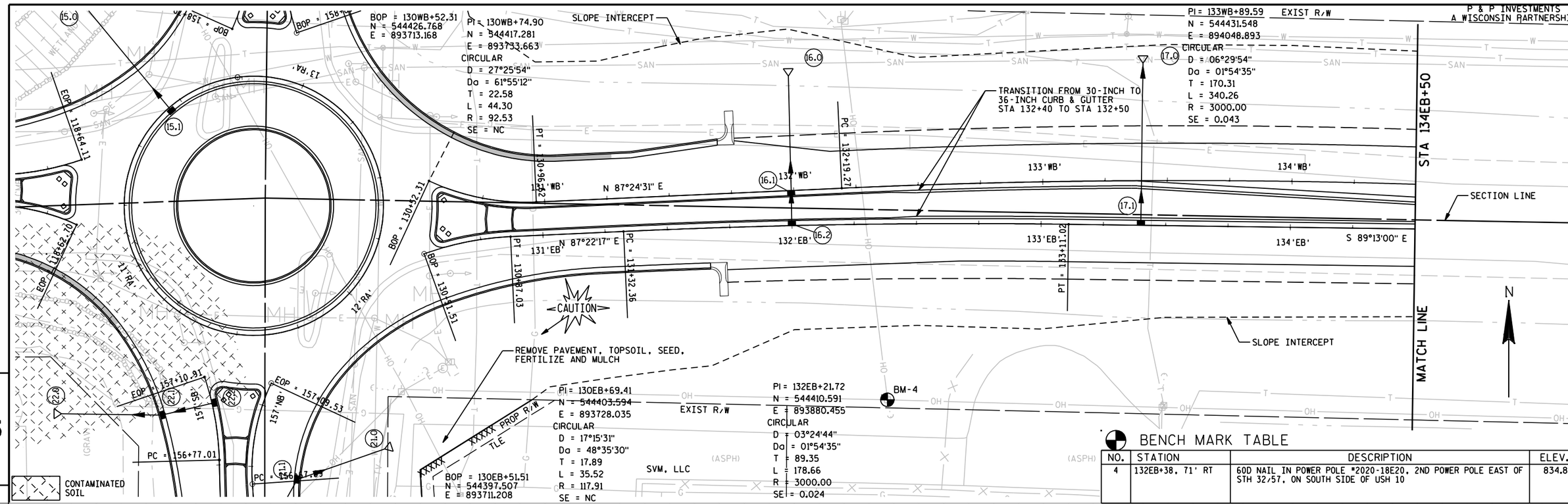

BENCH MARK TABLE

NO.	STATION	DESCRIPTION	ELEV.
4	132EB+38, 71' RT	60D NAIL IN POWER POLE #2020-18E20, 2ND POWER POLE EAST OF STH 32/57, ON SOUTH SIDE OF USH 10	834.88

PROJECT NO:1500-32-71	HWY:USH 10	COUNTY:CALUMET	PLAN AND PROFILE: USH 10 EAST EASTBOUND	SHEET 98	E

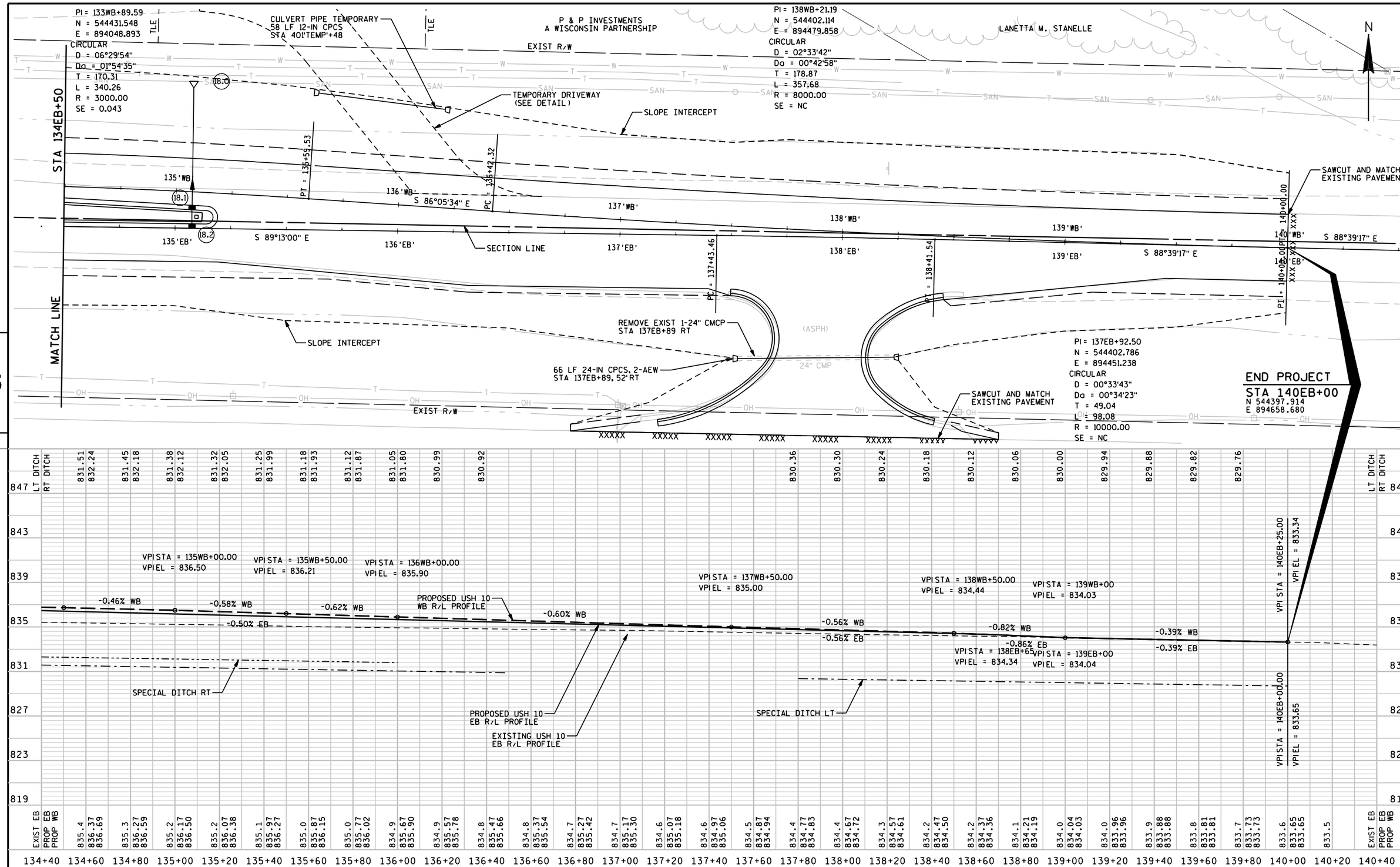

PROJECT NO:1500-32-71	HWY:USH 10	COUNTY:CALUMET	PLAN AND PROFILE: USH 10 EAST EASTBOUND	SHEET 99	E

FILE NAME : F:\TR\JOBS\E1865A08\Sheets\Plan\15003271_050106_pp.dgn PLOT DATE : 2/6/2012 4:22:05 PM PLOT BY : OMNNI- knuthc PLOT NAME : PLOT SCALE : 40.0000 ft / IN.

WISDOT/CADDS SHEET 40

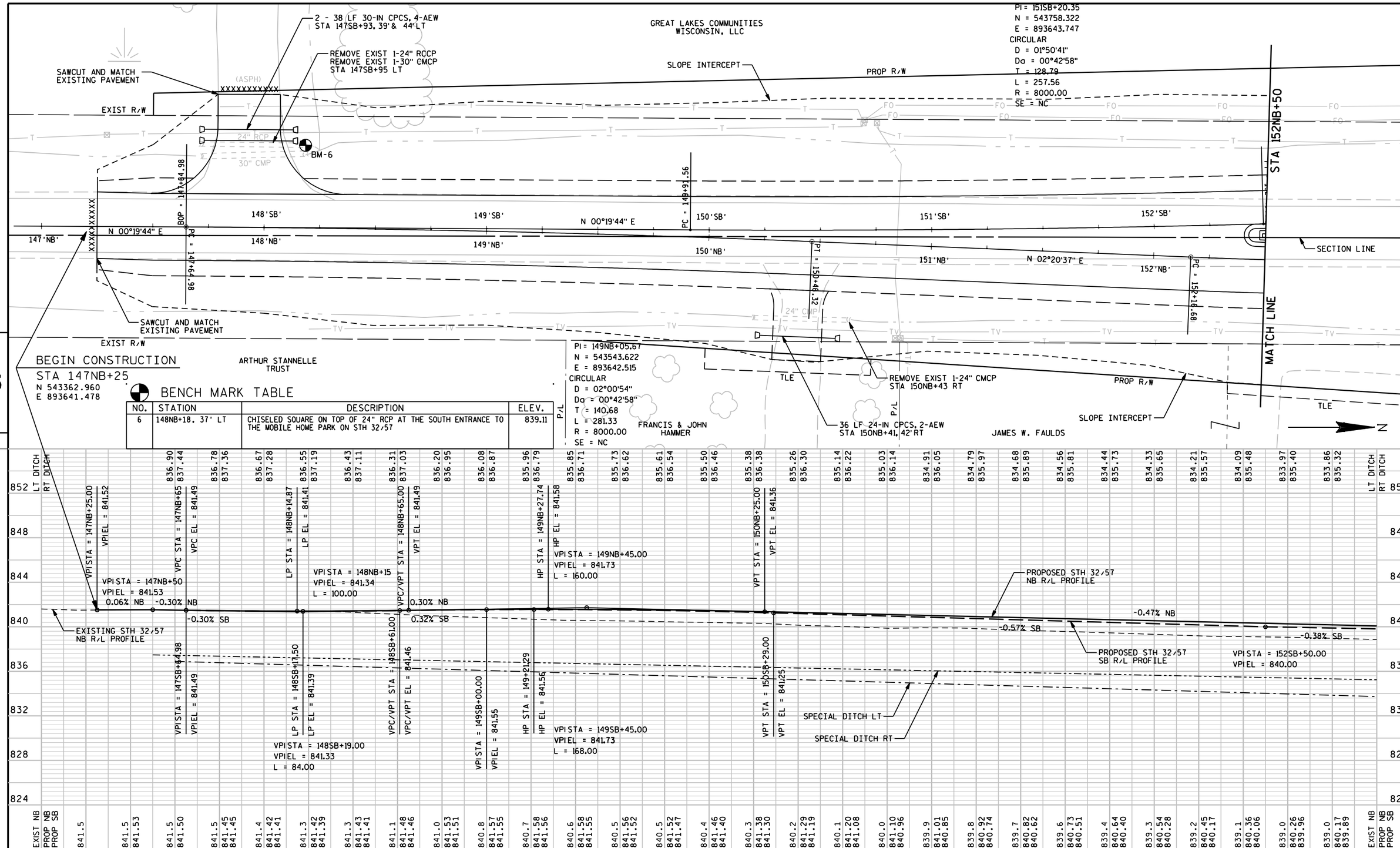

NO.	STATION	DESCRIPTION	ELEV.
6	148NB+18, 37' LT	CHISELED SQUARE ON TOP OF 24" RCP AT THE SOUTH ENTRANCE TO THE MOBILE HOME PARK ON STH 32/57	839.11

BENCH MARK TABLE

PROJECT NO:1500-32-71	HWY:USH 10	COUNTY:CALUMET	PLAN AND PROFILE: STH 32/57 SOUTH NORTHBOUND	SHEET 100	E

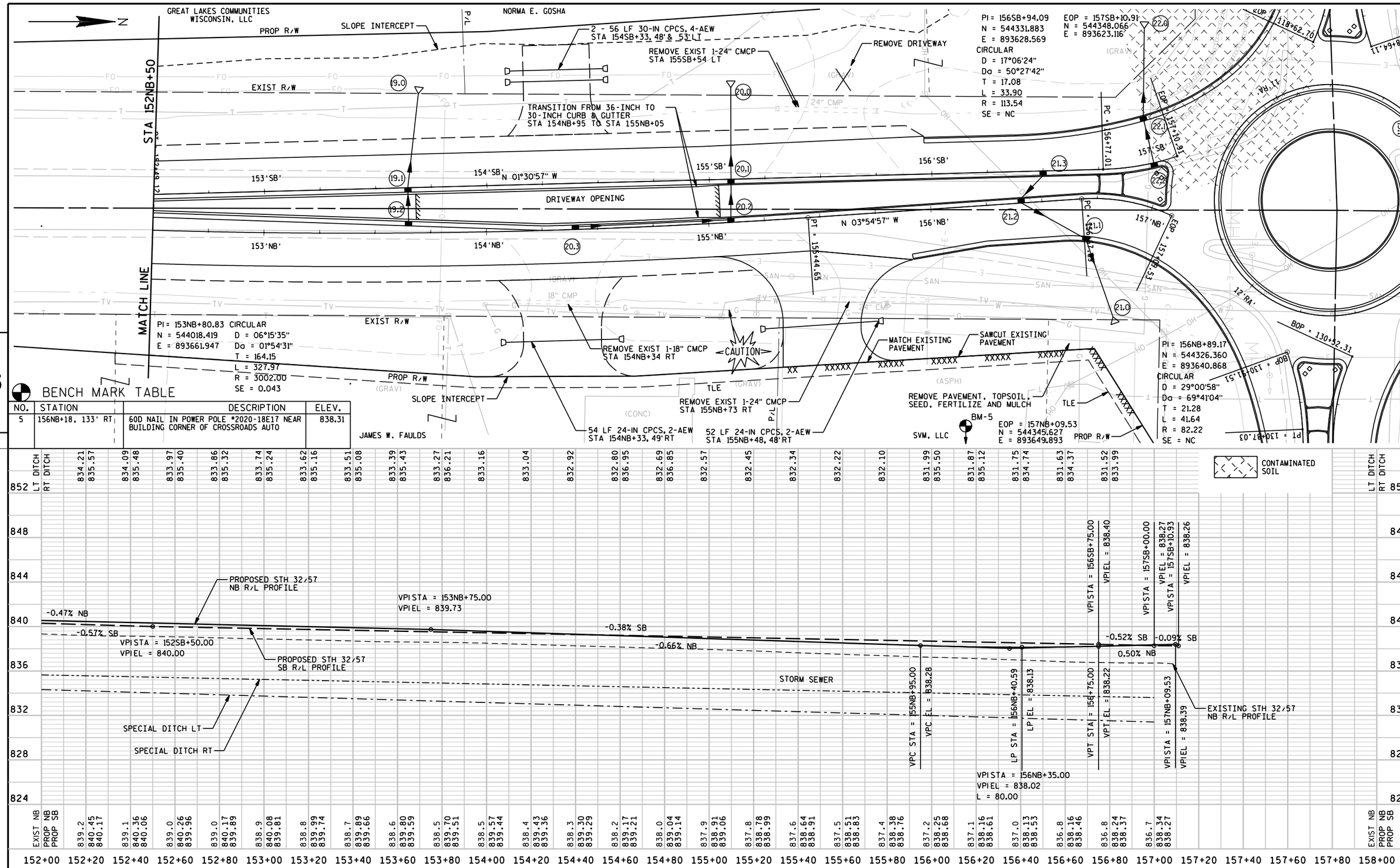

5

BENCH MARK TABLE

NO.	STATION	DESCRIPTION	ELEV.
5	156NB+18, 133' RT	60D NAIL IN POWER POLE *2020-18E17 NEAR BUILDING CORNER OF CROSSROADS AUTO	838.31

5

PROJECT NO:1500-32-71	HWY:USH 10	COUNTY:CALUMET	PLAN AND PROFILE: STH 32/57 SOUTH NORTHBOUND	SHEET 101	E

BENCH MARK TABLE

NO.	STATION	DESCRIPTION	ELEV.
3	161NB+32, 65' LT	60D NAIL IN POWER POLE *2020-7L2 NORTH OF CHURCH ENTRANCE ON WEST SIDE OF STH 32/57	835.14

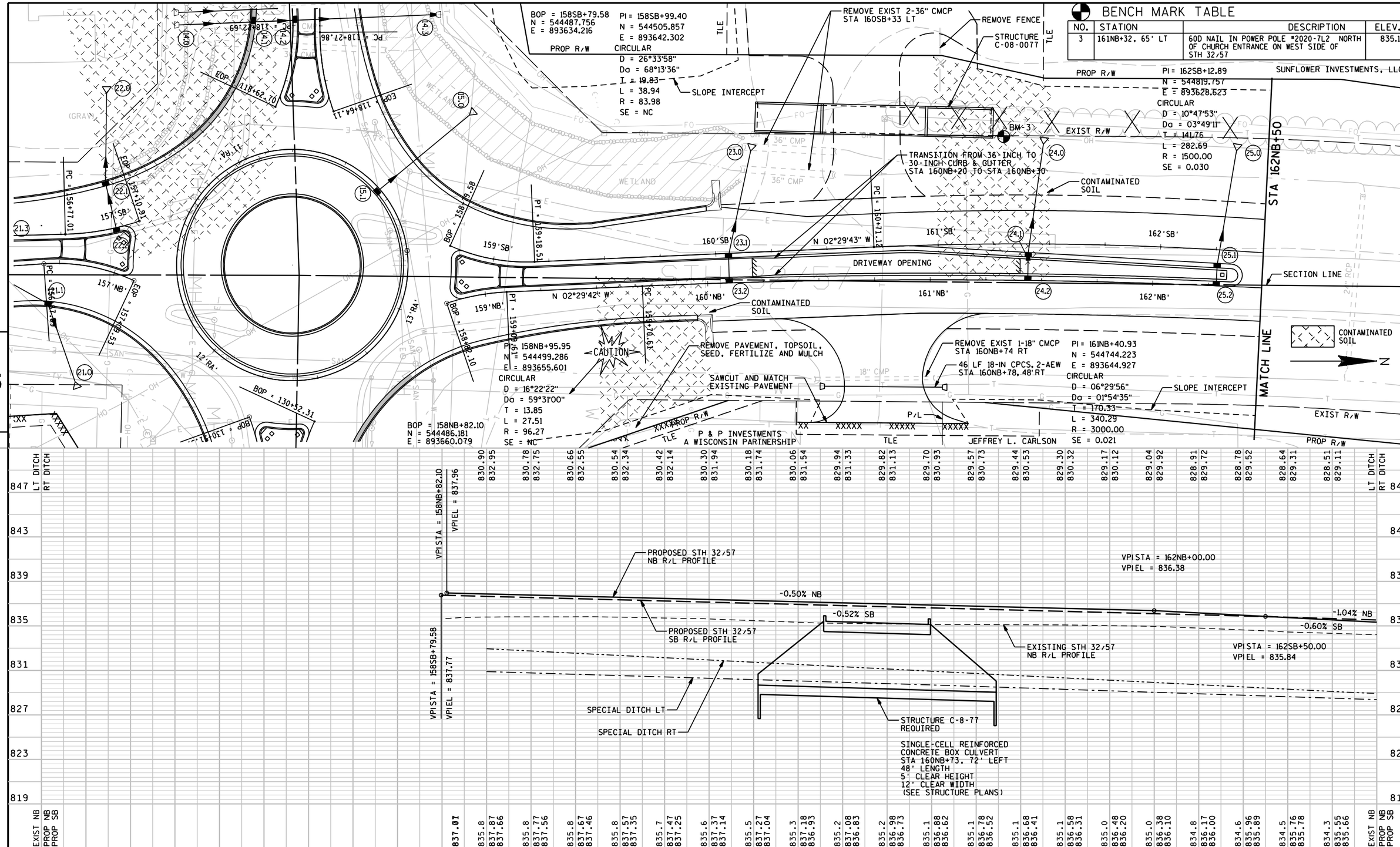

PROJECT NO:1500-32-71	HWY:USH 10	COUNTY:CALUMET	PLAN AND PROFILE: STH 32/57 NORTH NORTHBOUND	SHEET 102	E

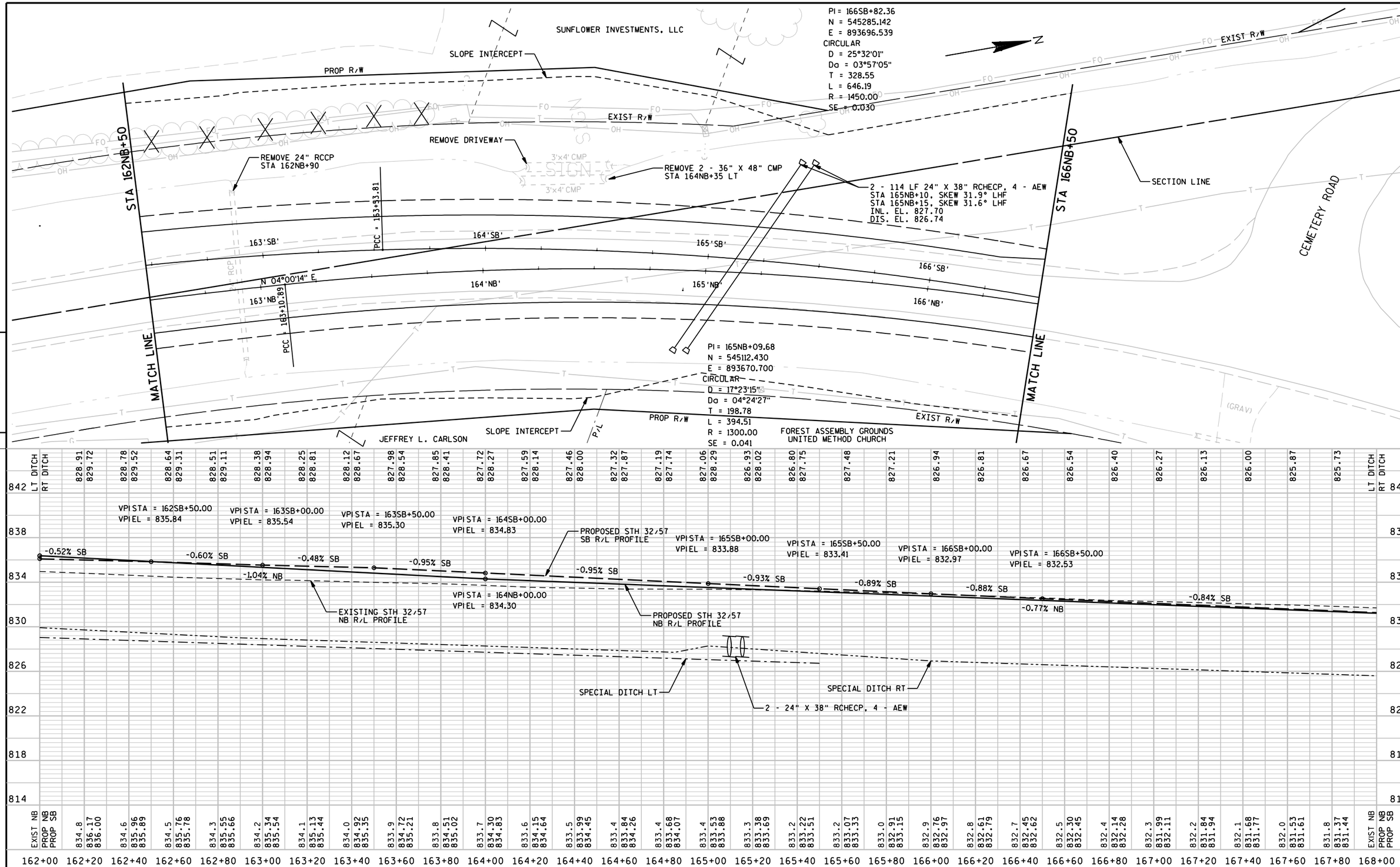

5

5

PROJECT NO:1500-32-71	HWY:USH 10	COUNTY:CALUMET	PLAN AND PROFILE: STH 32/57 NORTH NORTHBOUND	SHEET 103	E

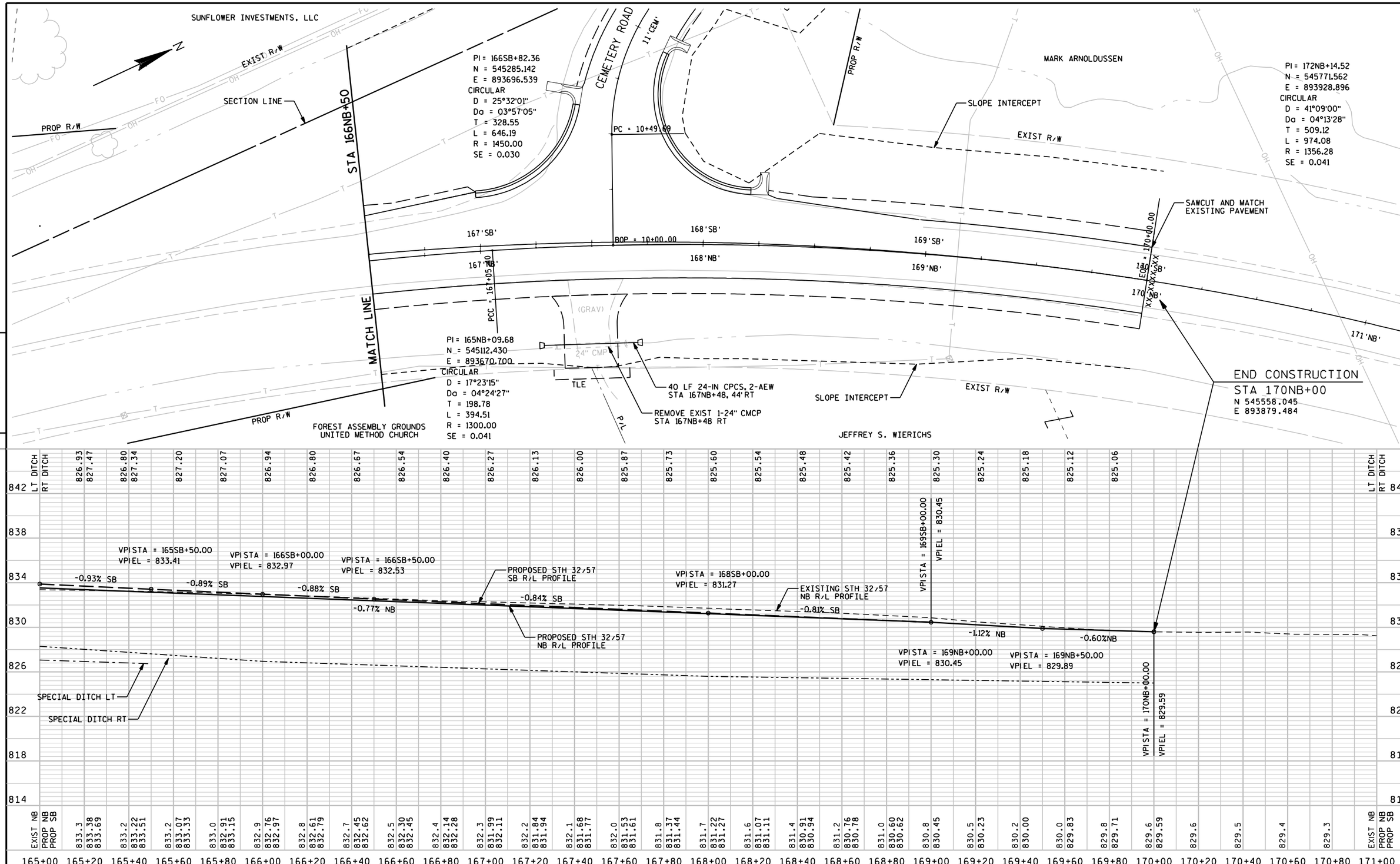

PROJECT NO:1500-32-71	HWY:USH 10	COUNTY:CALUMET	PLAN AND PROFILE: STH 32/57 NORTH NORTHBOUND	SHEET 104	E

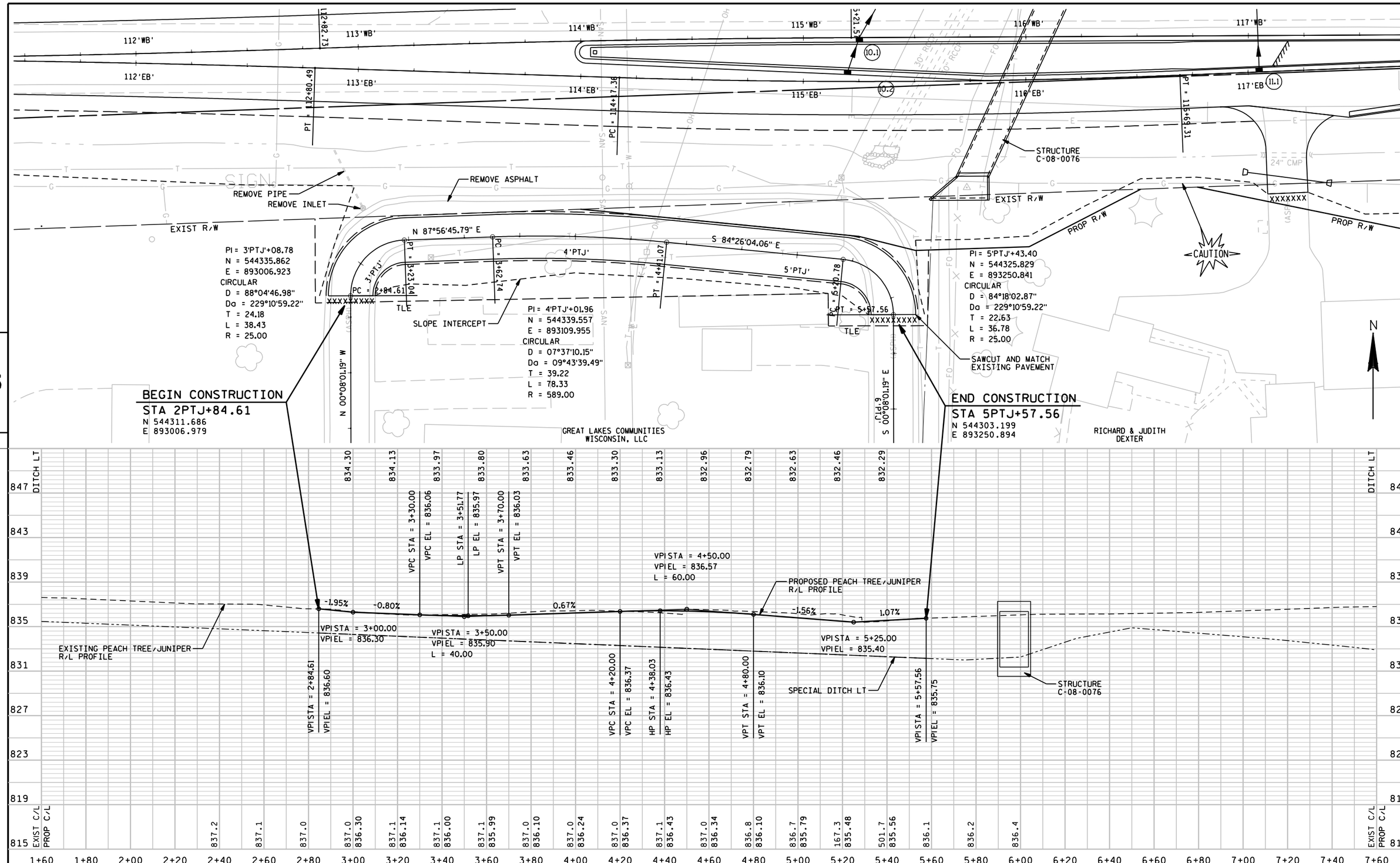

PROJECT NO:1500-32-71	HWY: USH 10	COUNTY: CALUMET	PLAN AND PROFILE: PEACH TREE LN / JUNIPER DR	SHEET 105	E

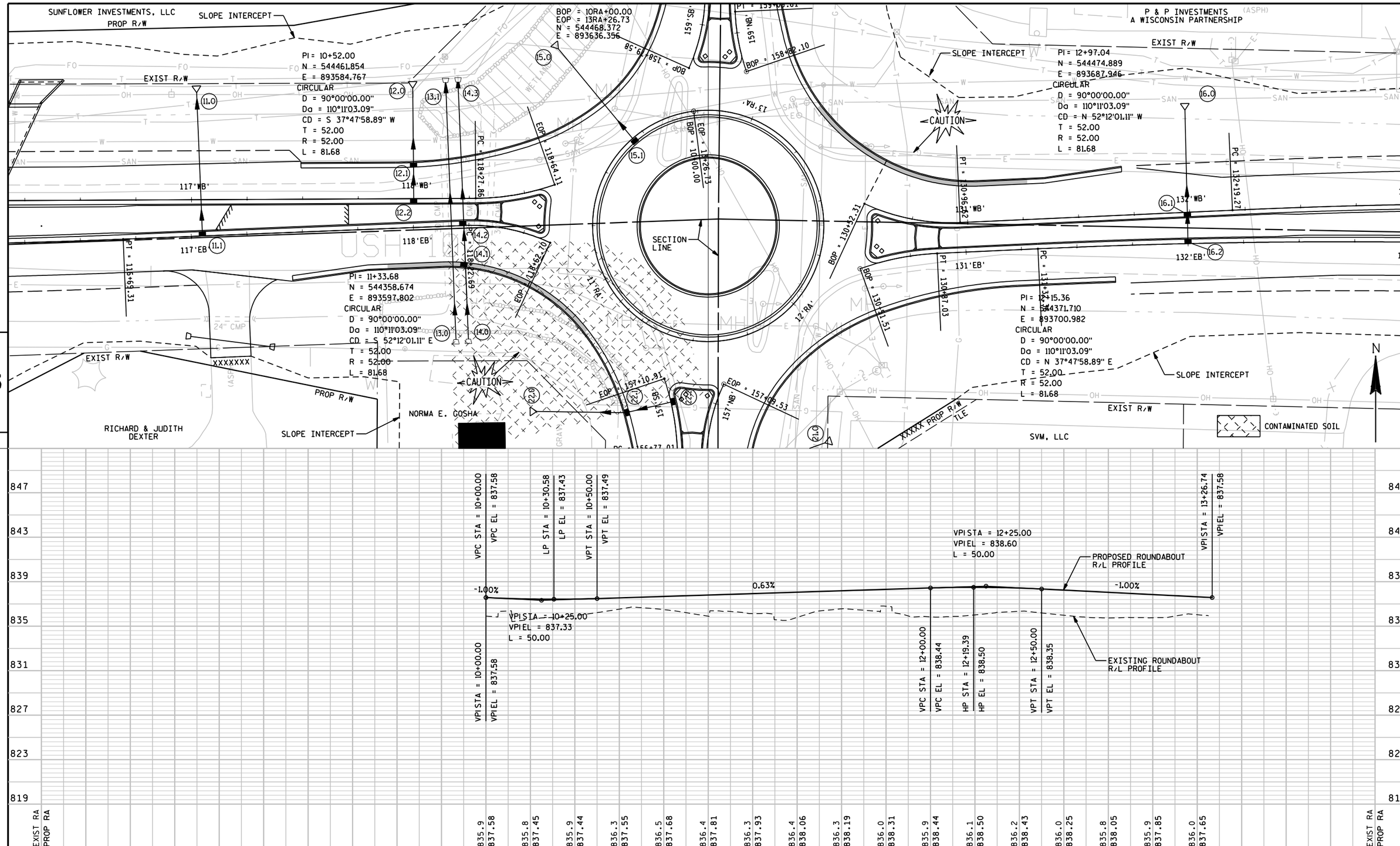

PROJECT NO:1500-32-71	HWY:USH 10	COUNTY:CALUMET	PLAN AND PROFILE: ROUNDABOUT	SHEET 106	E

SUNFLOWER INVESTMENTS, LLC

SLOPE INTERCEPT

PROP R/W

REMOVE EXIST 2-48" CMCP
STA 11CEM+60

EXIST R/W

SAWCUT AND MATCH
EXISTING PAVEMENT

EOP = 13+74.92
N = 545669.829
E = 893661.239

CEMETERY ROAD

N 00°21'29" E

12'CEM'

13'CEM'

48" CMP

PI = 11+64.92

EOP = 13+74.92

SECTION LINE

11'CEM'

EXIST R/W

END CONSTRUCTION
STA 12CEM+25.00
N 545519.908
E 893360.303

PC = 10+49.69

3 - 82 LF 64X43-IN PACS
CONC MASONRY ENDWALLS
STA 11CEM+45
INL. EL. 825.24
DIS. EL. 825.03

SLOPE INTERCEPT

PI = 11'CEM'+14.66
N = 545394.862
E = 893659.522
CIRCULAR
D = 66°01'18"
Da = 57°17'45"
T = 64.97
L = 115.23
R = 100.00
SE = NC

N 65°39'50" W

167'SB'

167'NB'

PCC = 16+05.30

BOP = 10+00.00

STH 32/57

168'SB'

168'NB'

PROP R/W

EXIST R/W

EXIST R/W

MARK ARNOLDUSSEN

N

5

5

842
838
834
830
826
822
818
814
810

VPI STA = 10+00.00
VPI EL = 831.53

VPI STA = 10+25.00
VPI EL = 832.13

VPI STA = 10+16.37
VPI EL = 832.04

PROPOSED CEMETERY
ROAD R/L PROFILE

3.00%

0.50%

1.04%

VPI STA = 10+01.37
VPI EL = 831.59

VPC STA = 10+35.00
VPC EL = 832.18

HP STA = 10+53.24
HP EL = 832.23

VPI STA = 10+75.00
VPI EL = 832.38
L = 80.00

VPC STA = 11+25.00
VPC EL = 831.53

-1.69%

VPI STA = 11+50.00
VPI EL = 831.11
L = 50.00

VPT STA = 11+75.00
VPT EL = 830.94

VPT STA = 11+15.00
VPT EL = 831.70

3 - 82 LF 64X43-IN PACS

-0.68%

-0.64%

VPI STA = 12+00.00
VPI EL = 830.77

VPI STA = 12+25.00
VPI EL = 830.61

EXISTING CEMETERY
ROAD R/L PROFILE

EXIST ℄ 832.0 831.53
PROP ℄ 832.0 832.08
831.9 832.20
831.6 832.22
831.4 832.13
831.1 831.93
830.9 831.62
830.6 831.30
830.6 831.06
830.7 830.91
830.8 830.77
830.6 830.64
830.5
830.4
830.2
830.1
829.9
829.7
829.5
EXIST ℄ PROP ℄

9+00 9+20 9+40 9+60 9+80 10+00 10+20 10+40 10+60 10+80 11+00 11+20 11+40 11+60 11+80 12+00 12+20 12+40 12+60 12+80 13+00 13+20 13+40 13+60 13+80 14+00 14+20 14+40 14+60 14+80 15+00

PROJECT NO:1500-32-71	HWY:USH 10	COUNTY:CALUMET	PLAN AND PROFILE: CEMETERY ROAD	SHEET 107	E

Standard Detail Drawing List

08A05-18A	INLET COVERS TYPE A, H, A-S, & H-S
08A05-18C	INLET COVERS TYPE F, HM, HM-S, S, T, V, HM-GJ, & HM-GJ-S
08B09-01	MANHOLES 3-FT, 4-FT, 5-FT, 6-FT, 7-FT AND 8-FT DIAMETER
08C07-01	INLETS 2X2-FT, 2X2.5-FT, 2X3-FT AND 2.5X3-FT
08D01-17	CONCRETE CURB, CONCRETE CURB AND GUTTER AND TIES
08D04-05	CONCRETE SURFACE DRAINS & ASPHALTIC FLUMES
08D05-15A	CURB RAMPS TYPES 1 AND 1-A
08D05-15B	CURB RAMPS TYPES 2 AND 3
08D05-15C	CURB RAMPS TYPES 4A AND 4A1
08D05-15D	CURB RAMPS TYPE 4B AND 4B1
08D05-15E	CURB RAMPS TYPES 5, 6, 7A, 7B & 8
08E09-06	SILT FENCE
08E10-02	INLET PROTECTION TYPE A, B, C AND D
08F01-11	APRON ENDWALLS FOR CULVERT PIPE
08F02-01	APRON ENDWALLS FOR PIPE ARCH AND ELLIPTICAL PIPE
08F04-07	JOINT TIES FOR CONCRETE PIPE AND CONCRETE COLLAR DETAIL
08F07-05	STEEL APRON ENDWALLS FOR CULVERT PIPE AND PIPE ARCH SLOPED SIDE FRAINS
08F10-01	CONCRETE MASONRY ENDWALLS FOR CULVERT PIPE AND PIPE ARCH
09A01-13A	AT-GRADE SIDE ROAD INTERSECTION, TYPES "B1", "B2", "C" AND D AND TEE INTERSECTION BYPASS LANE
09B02-07	CONDUIT
09B04-10	PULL BOX
09C02-06	CONCRETE BASES, TYPES 1, 2 & 5
09C03-03	TRANSFORMER/PEDESTAL BASES
09C05-07	CONCRETE CONTROL CABINET BASES
09D01-04	CABINET SERVICE INSTALLATION (METER BREAKER PEDESTAL)
09E01-12D	POLE MOUNTINGS FOR LIGHTING UNITS, TYPE 5 (30 FEET)
09E01-12G	HARDWARE DETAILS FOR POLE MOUNTINGS
11B02-02	CONCRETE MEDIAN NOSE
12A03-10	NAME PLATE (STRUCTURES)
14A02-01	TREE PLANTING DETAIL
15A03-02A	FLEXIBLE MARKER POST FOR CULVERT END
15A03-02B	FLEXIBLE MARKER POST FOR CULVERT END
15B03-12A	CHAIN LINK FENCE
15B03-12B	CHAIN LINK FENCE
15C02-04A	BARRICADES AND SIGNS FOR MAINLINE CLOSURES
15C02-04B	BARRICADES AND SIGNS FOR MAINLINE CLOSURES
15C02-04C	DETOUR SIGNING FOR MAINLINE CLOSURES
15C03-01	BARRICADES AND SIGNS FOR SIDEROAD CLOSURES
15C08-15A	PAVEMENT MARKING (MAINLINE)
15C18-03	MEDIAN ISLAND MARKING
16A01-06	LANDMARK REFERENCE MONUMENTS AND COVERS

6

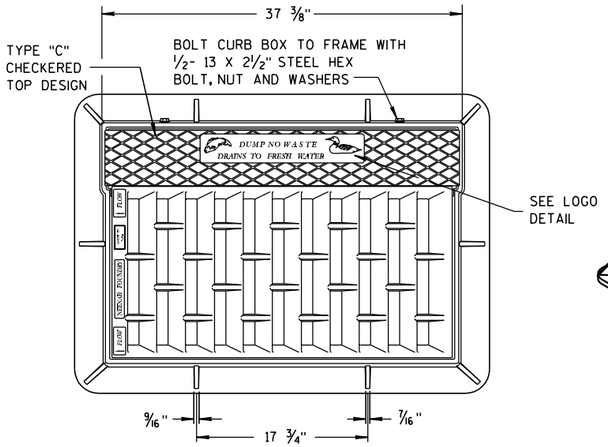

NOTE:
GRATE IS REVERSIBLE.

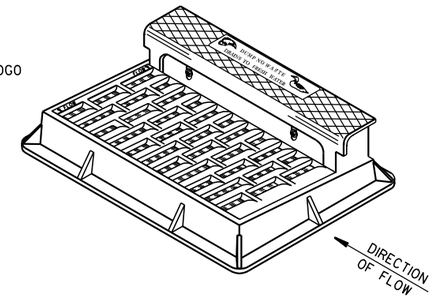

NOTE: CURB BOX HEIGHT ADJUSTABLE 6" TO 9"

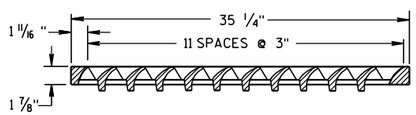

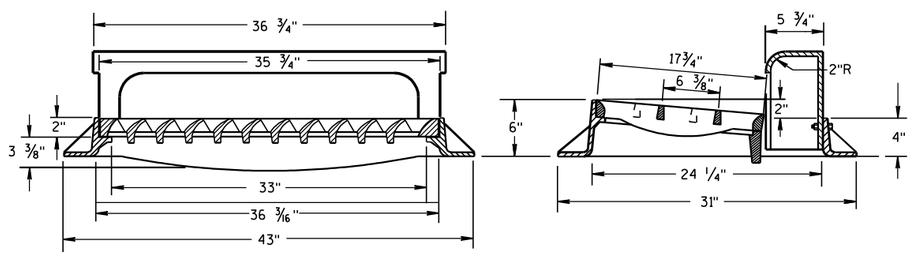

TYPE "H"

(APPROXIMATE WEIGHT 441 LBS.)
FRAME..... 181 LBS.
GRATE..... 146 LBS.
CURB BOX..... 114 LBS.

1 1/8" DIAGONAL BARS WITH 1 5/8" OPENINGS

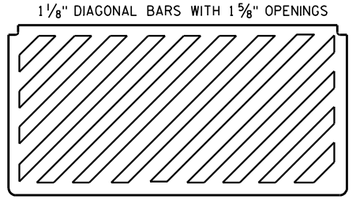

SPECIAL GRATE FOR TYPE "H" COVER

(MEASURES 35 1/4" X 17 3/4" X 2")
(APPROXIMATE WEIGHT 159 LBS.)
GRATE..... 159 LBS.

(NOTED AS TYPE H-S ON DRAINAGE TABLE)

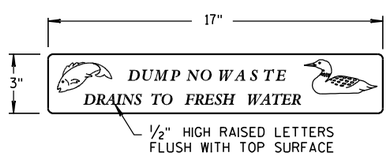

LOGO DETAIL

GENERAL NOTES

DETAILS OF CONSTRUCTION, MATERIALS AND WORKMANSHIP NOT SHOWN ON THIS DRAWING SHALL CONFORM TO THE PERTINENT REQUIREMENTS OF THE STANDARD SPECIFICATIONS AND THE APPLICABLE SPECIAL PROVISIONS.

DETAIL DRAWINGS FOR PROPOSED ALTERNATE DESIGNS FOR CATCH BASIN, MANHOLE AND INLET COVERS SHALL BE SUBMITTED TO THE ENGINEER FOR APPROVAL PROVIDING THAT SUCH ALTERNATE DESIGNS MAKE PROVISION FOR EQUIVALENT CAPACITY AND STRENGTH.

ROUND FRAMES AND COVERS SHALL HAVE CONTINUOUSLY MACHINED BEARING SURFACES TO PREVENT ROCKING AND RATTLING.

THE ACTUAL WEIGHT OF COVERS MAY VARY WITHIN 5 PERCENT, PLUS OR MINUS, OF THE APPROXIMATE WEIGHT.

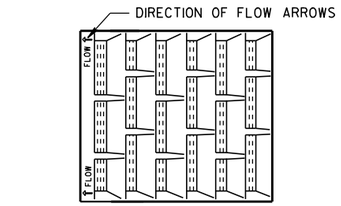

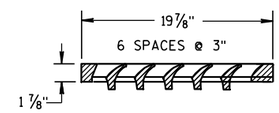

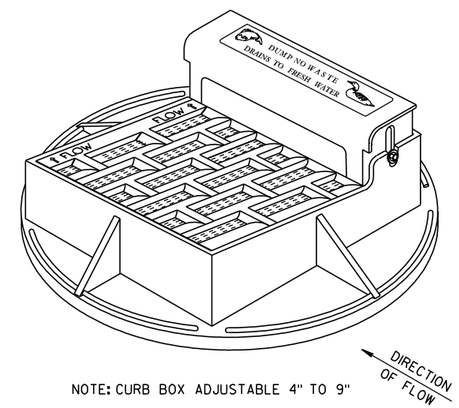

NOTE: CURB BOX ADJUSTABLE 4" TO 9"

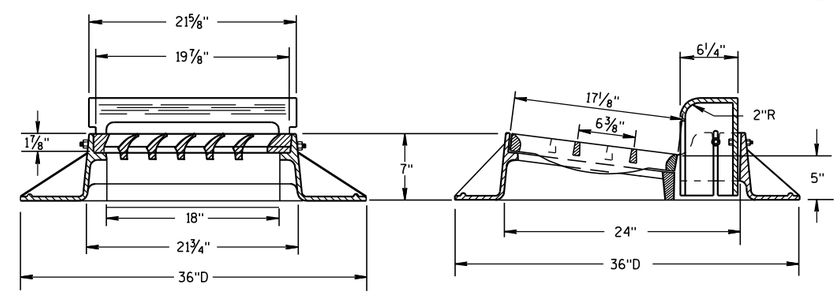

TYPE "A"

(APPROXIMATE WEIGHT 340 LBS.)
FRAME..... 185 LBS.
GRATE..... 71 LBS.
CURB BOX..... 84 LBS.

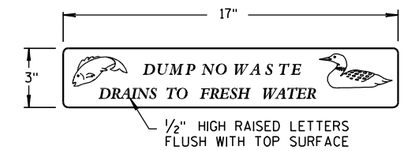

LOGO DETAIL

NOTE:
GRATE IS REVERSIBLE.

1" DIAGONAL BARS WITH 1 1/2" OPENINGS

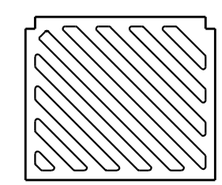

SPECIAL GRATE FOR TYPE "A" COVER

(MEASURES 19 3/4" X 17" X 1 7/8"
GRATE..... 84 LBS.

(NOTED AS TYPE A-S ON DRAINAGE TABLE)

INLET COVERS
TYPE A, H, A-S, & H-S

STATE OF WISCONSIN
DEPARTMENT OF TRANSPORTATION

APPROVED
6/5/2012 — DATE
/S/ Jerry H. Zogg — ROADWAY STANDARDS DEVELOPMENT ENGINEER
FHWA

GENERAL NOTES

DETAILS OF CONSTRUCTION, MATERIALS AND WORKMANSHIP NOT SHOWN ON THIS DRAWING SHALL CONFORM TO THE PERTINENT REQUIREMENTS OF THE STANDARD SPECIFICATIONS AND THE APPLICABLE SPECIAL PROVISIONS.

DETAIL DRAWINGS FOR PROPOSED ALTERNATE DESIGNS FOR INLET COVERS SHALL BE SUBMITTED TO THE ENGINEER FOR APPROVAL PROVIDING THAT SUCH ALTERNATE DESIGNS MAKE PROVISION FOR EQUIVALENT CAPACITY AND STRENGTH.

THE ACTUAL WEIGHT OF COVERS MAY VARY WITHIN 5 PERCENT, PLUS OR MINUS, OF THE APPROXIMATE WEIGHT.

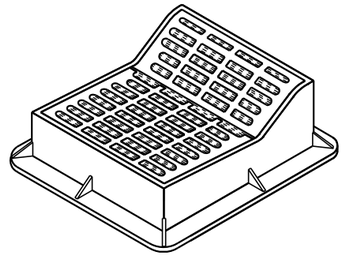

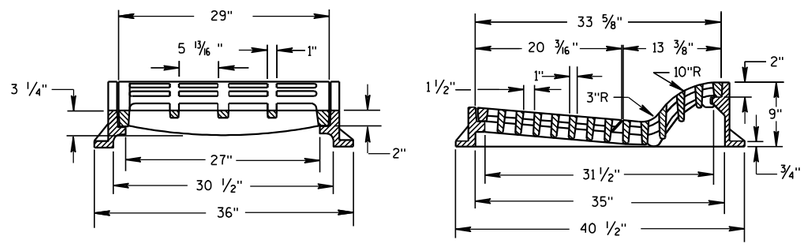

TYPE "F"

(APPROXIMATE WEIGHT 644 LBS.)

FRAME.....302 LBS.
GRATE..... 160 LBS.
GRATE..... 182 LBS.

USE WITH TYPES A & D CONCRETE CURB & GUTTER, 36 INCH.

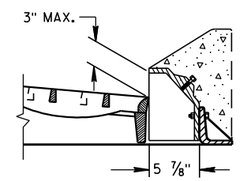

ALTERNATIVE CURB BOX FOR TYPE "HM" COVER

(APPROXIMATE WEIGHT CURB BOX 68 LBS.)

USE WITH TYPES G & J CONCRETE CURB & GUTTER, 30 INCH
NOTED AS TYPE HM-GJ ON DRAINAGE TABLE

NOTE:
SPECIAL GRATE FOR THE
TYPE "H" COVER MAY ALSO BE
USED FOR THE TYPE "HM-GJ" COVER
NOTED AS TYPE HM-GJ-S ON DRAINAGE TABLE

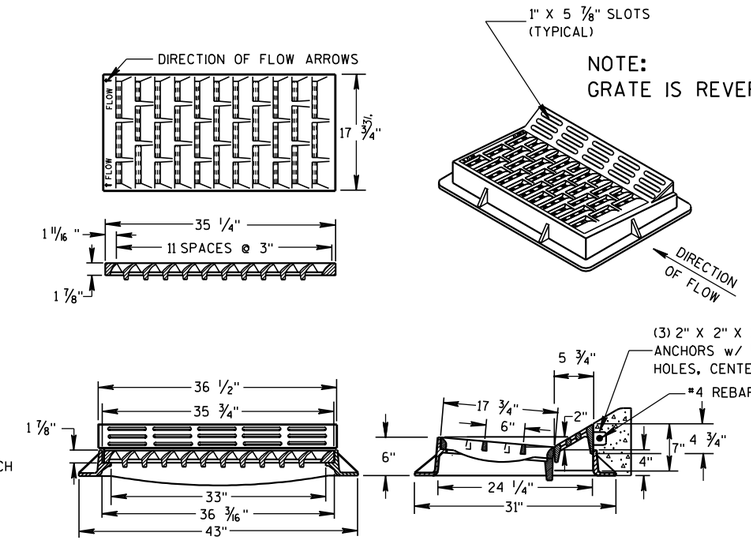

TYPE "HM"

(APPROXIMATE WEIGHT 414 LBS.)

FRAME..... 181 LBS.
GRATE..... 159 LBS.
CURB BOX..... 74 LBS.

USE WITH TYPES A & D CONCRETE CURB & GUTTER, 36 INCH.

NOTE:
SPECIAL GRATE FOR THE
TYPE "H" COVER MAY ALSO BE
USED FOR THE TYPE "HM" COVER
NOTED AS TYPE HM-S ON DRAINAGE TABLE

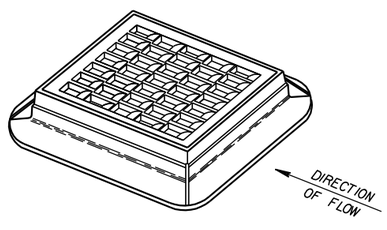

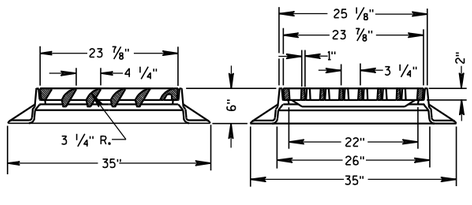

TYPE "S"

(APPROXIMATE WEIGHT 333 LBS.)

FRAME.....164 LBS.
GRATE..... 169 LBS.

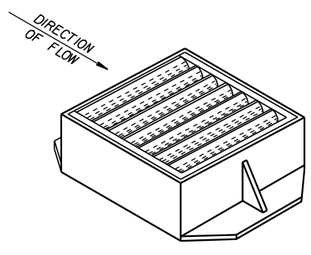

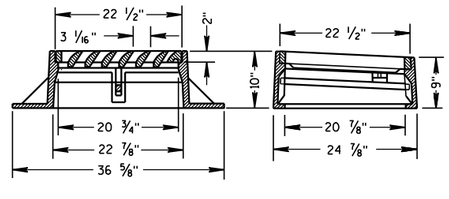

TYPE "V"

(APPROXIMATE WEIGHT 410 LBS.)

FRAME..... 269 LBS.
GRATE..... 136 LBS.
SAFETY BAR..... 5 LBS.

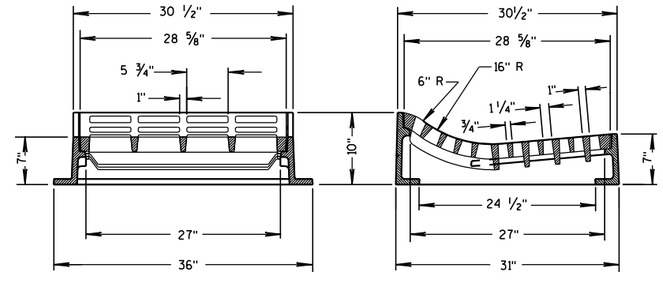

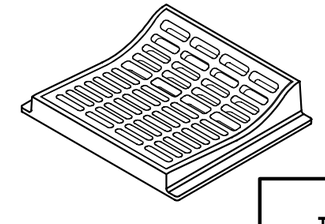

TYPE "T"

(APPROXIMATE WEIGHT 530 LBS.)

FRAME.....270 LBS.
GRATE.....260 LBS.

USE WITH TYPES R & T CONCRETE CURB & GUTTER, 36 INCH.

INLET COVERS
TYPE F, HM, HM-S, S, T, V, HM-GJ, & HM-GJ-S

STATE OF WISCONSIN
DEPARTMENT OF TRANSPORTATION

APPROVED
6/5/2012 — DATE
/S/ Jerry H. Zogg — ROADWAY STANDARDS DEVELOPMENT ENGINEER
FHWA

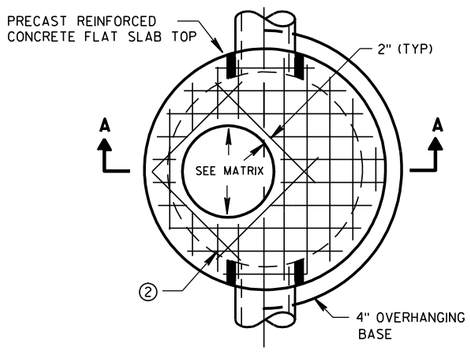

PLAN VIEW CIRCULAR OPENING

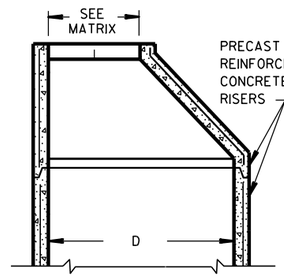

OPTIONAL PRECAST REINFORCED CONCRETE ECCENTRIC TOP

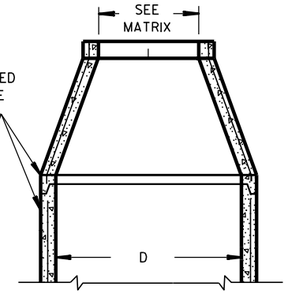

OPTIONAL PRECAST REINFORCED CONCRETE CONCENTRIC TOP

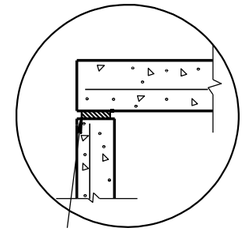

TOP WITH PLAIN END JOINT

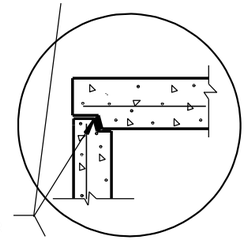

JOINTS TO BE SEALED WITH A BUTYL RUBBER SEAL PER SEALANT MANUFACTURERS RECOMMENDATIONS CONFORMING TO ASTM C990 (TYP)

TOP WITH TONGUE AND GROOVE JOINT

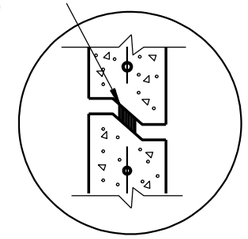

RISER WITH TONGUE AND GROOVE JOINT

DETAIL "B"

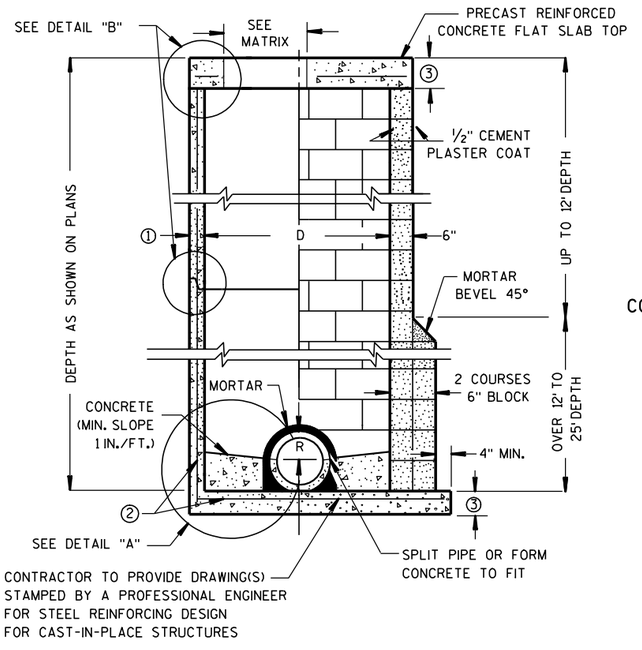

PRECAST REINFORCED CONCRETE WITH MONOLITHIC BASE

CONCRETE BLOCK WITH CAST-IN-PLACE OR PRECAST REINFORCED CONCRETE BASE ②

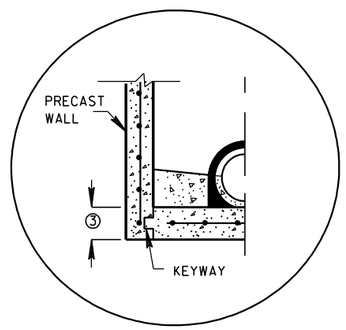

PRECAST REINFORCED CONCRETE WITH INTEGRAL BASE OPTION

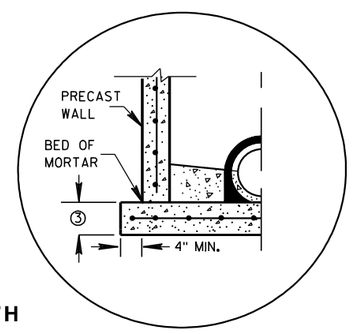

SEPERATE PRECAST REINFORCED CONCRETE BASE OPTION

DETAIL "A"

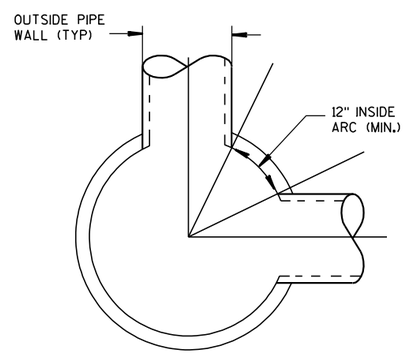

DETAIL "C"

GENERAL NOTES

DETAILS OF CONSTRUCTION, MATERIALS AND WORKMANSHIP NOT SHOWN ON THIS DRAWING SHALL CONFORM TO THE PERTINENT REQUIREMENTS OF THE STANDARD SPECIFICATIONS AND THE APPLICABLE SPECIAL PROVISIONS.

UNLESS OTHERWISE AUTHORIZED IN WRITING BY THE ENGINEER, THE CONTRACTOR SHALL NOT ORDER AND DELIVER PRECAST MANHOLE UNITS REQUIRED FOR THE PROJECT UNTIL A LIST OF SIZES IS FURNISHED BY THE ENGINEER.

DETAILED DRAWINGS FOR PROPOSED ALTERNATE DESIGNS FOR UNDERGROUND DRAINAGE STRUCTURES SHALL BE SUBMITTED TO THE ENGINEER FOR APPROVAL PROVIDING THAT SUCH ALTERNATE DESIGNS MAKE PROVISION FOR EQUIVALENT CAPACITY AND STRENGTH.

ALL DRAINAGE STRUCTURES ARE DESIGNATED ON THE PLANS AS "MANHOLES 3X3-L", "CATCH BASINS 4-B", "INLETS 2X3-H", ETC. THE FIRST NUMBERS DESIGNATE THE SIZE OF THE STRUCTURE, AND THE FOLLOWING LETTER DESIGNATES THE TYPE OF COVER TO BE USED TO COMPRISE THE COMPLETE UNIT.

BASES SHALL BE PLACED ON A BED OF MATERIAL AT LEAST 6 INCHES IN DEPTH, WHICH MEETS THE REQUIREMENTS OF GRANULAR BACKFILL. THIS BEDDING SHALL BE COMPACTED AND PROVIDE UNIFORM SUPPORT FOR THE ENTIRE AREA OF THE BASE.

PRECAST REINFORCED CONE TOPS (ECCENTRIC OR CONCENTRIC) OR PRECAST REINFORCED FLAT SLAB TOPS MAY BE USED ON CONCRETE BLOCK STRUCTURES. THE CONE TOPS SHALL BE INSTALLED ON A BED OF MORTAR.

ECCENTRIC CONE TOPS MAY BE USED ON ALL STRUCTURES, AND CONCENTRIC CONE TOPS SHALL BE USED ONLY ON STRUCTURES 5 FEET OR LESS IN DEPTH, UNLESS OTHERWISE DIRECTED BY THE ENGINEER.

STEPS MEETING AASHTO M199 AND THE FOLLOWING REQUIREMENTS SHALL BE INSTALLED IN ALL STRUCTURES OVER 5 FEET IN DEPTH: 16 INCH C-C MAXIMUM SPACING; PROJECT A MINIMUM CLEAR DISTANCE OF 4 INCHES FROM THE WALL AT THE POINT OF EMBEDMENT; MINIMUM LENGTH OF 10 INCHES; MINIMUM WALL EMBEDMENT OF 3 INCHES. FERROUS METAL STEPS NOT PAINTED OR TREATED TO RESIST CORROSION SHALL HAVE A MINIMUM CROSS SECTIONAL DIMENSION OF 1 INCH.

STEPS OF APPROVED POLYPROPYLENE PLASTIC COATED REINFORCEMENT BAR ARE ACCEPTABLE. REINFORCING BAR MUST BE A MINIMUM OF ½" AND MEET THE REQUIREMENTS OF ASTM A615.

CERTIFICATION SHALL BE PROVIDED THAT INSTALLED STEPS WHEN TESTED IN ACCORDANCE WITH SECTION 10 OF AASHTO T280 CAN WITHSTAND A VERTICAL LOAD OF 800 LBS. AND A HORIZONTAL LOAD OF 400 LBS.

ALL BAR STEEL REINFORCEMENT SHALL BE EMBEDDED 2 INCHES CLEAR UNLESS OTHERWISE SHOWN OR NOTED.

CONCRETE BLOCK WILL NOT BE PERMITED FOR STRUCTURES GREATER THAN 4 FEET IN DIAMETER.

PRECAST REINFORCED RISERS SHALL HAVE A TONGUE AND GROOVE JOINT WITH TONGUE UP OR DOWN.

ALL PRECAST MANHOLE UNITS SHALL CONFORM TO THE PERTINENT REQUIREMENTS OF AASHTO DESIGNATION M 199.

4" OVERHANGING BASES ARE REQUIRED FOR ALL CONCRETE BLOCK INSTALLATIONS. 4" OVERHANG IS REQUIRED WHEN SEPERATE PRECAST BASE IS PROVIDED. OVERHANG IS NOT REQUIRED ON PRECAST STRUCTURES WITH AN INTEGRAL OR MONOLITHIC BASE.

FOR ADDITIONAL CONFIGURATIONS, MAINTAIN A MINIMUM OF 12 INCHES AS MEASURED FROM THE INSIDE OF THE STRUCTURE WALL BETWEEN THE OUTSIDE PIPE WALLS OF ADJACENT PIPES. SEE DETAIL "C".

① MINIMUM WALL THICKNESS SHALL BE 4 INCHES FOR 3-FT, 5 INCHES FOR 4-FT, 6 INCHES FOR 5-FT, 7 INCHES FOR 6-FT, 8 INCHES FOR 7-FT AND 9 INCHES FOR 8-FT DIAMETER PRECAST MANHOLES.

② FOR PRECAST MANHOLES PROVIDE REINFORCING STEEL IN ACCORDANCE TO AASHTO M199.

③ PRECAST FLAT SLAB TOPS AND BASES WITH A DIAMETER OF 48" AND LESS SHALL HAVE A MINIMUM THICKNESS OF 6". PRECAST FLAT SLAB TOPS AND BASES WITH A DIAMETER LARGER THAN 48" SHALL HAVE A MINIMUM THICKNESS OF 8".

MANHOLE COVER OPENING MATRIX

MANHOLE COVER TYPE	C	ALL J'S	K	L	M
OPENING SIZE (FT)					
2 DIA.	X	X		X	
3 DIA.			X		X

PIPE MATRIX

MANHOLE SIZE	MAXIMUM INSIDE PIPE DIAMETER FOR TWO PIPES	
	180° SEPARATION (IN)	90° SEPARATION (IN)
3-FT	15	12
4-FT	24	18
5-FT	36	24
6-FT	42	36
7-FT	48	36
8-FT	60	42

MANHOLES 3-FT, 4-FT, 5-FT, 6-FT, 7-FT AND 8-FT DIAMETER

STATE OF WISCONSIN
DEPARTMENT OF TRANSPORTATION

APPROVED
6/5/2012 — DATE
/S/ Jerry H. Zogg — ROADWAY STANDARDS DEVELOPMENT ENGINEER
FHWA

MANHOLES 3-FT, 4-FT, 5-FT, 6-FT, 7-FT AND 8-FT DIAMETER

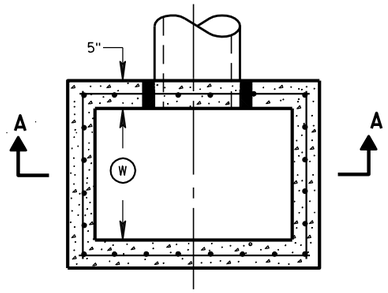

PLAN VIEW

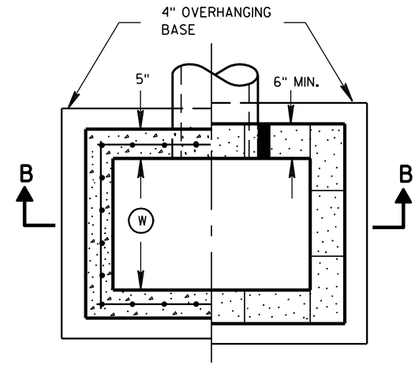

PLAN VIEW

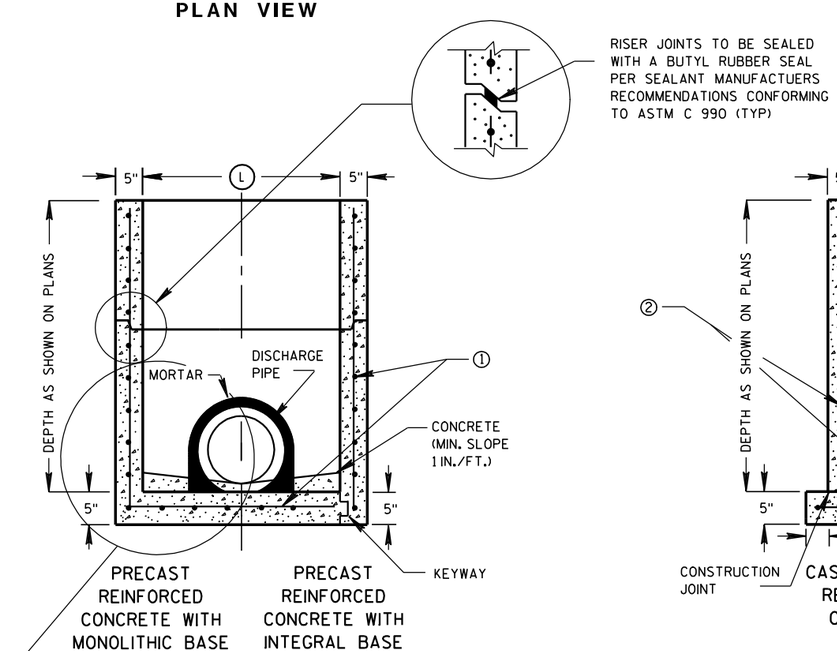

SECTION A-A

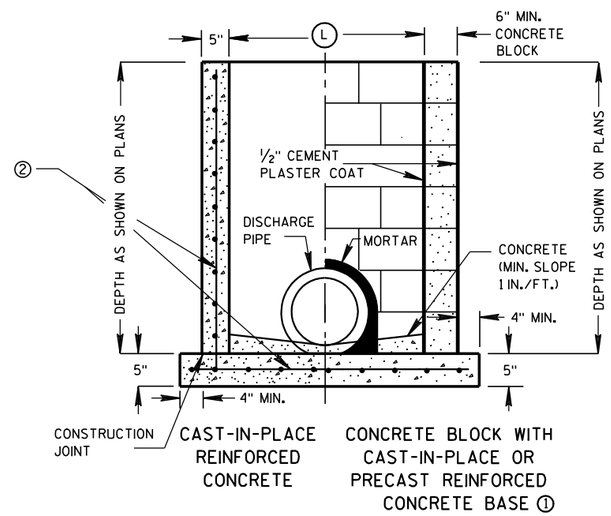

SECTION B-B

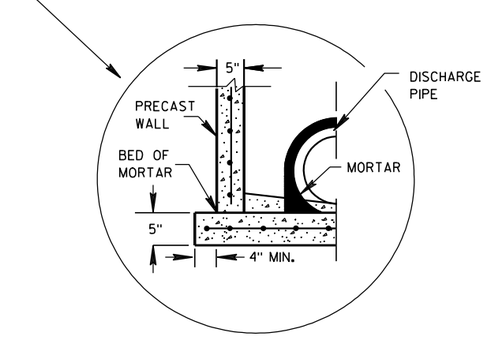

SEPERATE PRECAST REINFORCED CONCRETE BASE OPTION

GENERAL NOTES

DETAILS OF CONSTRUCTION, MATERIALS AND WORKMANSHIP NOT SHOWN ON THIS DRAWING SHALL CONFORM TO THE PERTINENT REQUIREMENTS OF THE STANDARD SPECIFICATIONS AND THE APPLICABLE SPECIAL PROVISIONS.

UNLESS OTHERWISE AUTHORIZED IN WRITING BY THE ENGINEER, THE CONTRACTOR SHALL NOT ORDER AND DELIVER PRECAST INLET UNITS REQUIRED FOR THE PROJECT UNTIL A LIST OF SIZES IS FURNISHED BY THE ENGINEER.

DETAILED DRAWINGS FOR PROPOSED ALTERNATE DESIGNS FOR UNDERGROUND DRAINAGE STRUCTURES SHALL BE SUBMITTED TO THE ENGINEER FOR APPROVAL PROVIDING THAT SUCH ALTERNATE DESIGNS MAKE PROVISION FOR EQUIVALENT CAPACITY AND STRENGTH.

ALL PRECAST INLET UNITS SHALL CONFORM TO THE PERTINENT REQUIREMENTS OF ASTM C 913.

ALL DRAINAGE STRUCTURES ARE DESIGNATED ON THE PLANS AS "MANHOLES 3X3-L", "CATCH BASINS 4-B", "INLETS 2X3-H", ETC. THE FIRST NUMBERS DESIGNATES THE SIZE OF THE STRUCTURE, AND THE FOLLOWING LETTER DESIGNATES THE TYPE OF COVER TO BE USED TO COMPRISE THE COMPLETE UNIT.

BASES SHALL BE PLACED ON A BED OF MATERIAL AT LEAST 6 INCHES IN DEPTH, WHICH MEETS THE REQUIREMENTS OF GRANULAR BACKFILL. THIS BEDDING SHALL BE COMPACTED AND PROVIDE UNIFORM SUPPORT FOR THE ENTIRE AREA OF THE BASE.

ALL BAR STEEL REINFORCEMENT SHALL BE EMBEDDED 2 INCHES CLEAR UNLESS OTHERWISE SHOWN OR NOTED.

PRECAST REINFORCED RISERS SHALL HAVE A TONGUE AND GROOVE JOINT WITH TONGUE UP OR DOWN.

4" OVERHANGING BASES ARE REQUIRED FOR CAST-IN-PLACE REINFORCED CONCRETE AND CONCRETE BLOCK INSTALLATIONS.
4" OVERHANG IS REQUIRED WHEN SEPERATE PRECAST BASE IS PROVIDED.
OVERHANG IS NOT REQUIRED ON PRECAST STRUCTURES WITH AN INTEGRAL OR MONOLITHIC BASE.

MAXIMUM INSIDE PIPE DIAMETER DETERMINED BY 3 INCH CLEARANCE ON EACH SIDE OF THE OUTSIDE WALL OF THE PIPE. SEE DETAIL "A". ASSUMES PIPE ENTERS PERPENDICULAR TO THE STRUCTURE.

① FOR PRECAST INLETS PROVIDE REINFORCING STEEL IN ACCORDANCE TO ASTM C 913.

② CONTRACTOR TO PROVIDE DRAWING(S) STAMPED BY A PROFESSIONAL ENGINEER FOR STEEL REINFORCING DESIGN FOR CAST-IN-PLACE STRUCTURES.

INLET COVER MATRIX

INLET SIZE		INLET COVER TYPE	ALL A'S	ALL B'S	BW	F	ALL H'S	S	T	V	WM
	WIDTH Ⓦ (FT)	LENGTH Ⓛ (FT)									
2X2-FT	2	2	X	X				X		X	
2X2.5-FT	2	2.5			X			X	X	X	X
2X3-FT	2	3					X				
2.5X3-FT	2.5	3				X					

PIPE MATRIX

INLET SIZE	MAXIMUM INSIDE PIPE DIAMETER	
	WIDTH (IN)	LENGTH (IN)
2X2-FT	12	12
2X2.5-FT	12	18
2X3-FT	12	24
2.5X3-FT	18	24

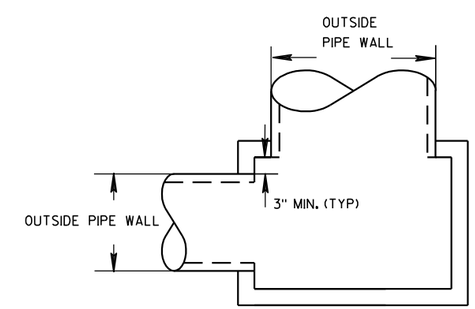

DETAIL "A"

INLETS 2X2-FT, 2X2.5-FT, 2X3-FT AND 2.5X3-FT

INLETS 2X2-FT, 2X2.5-FT, 2X3-FT AND 2.5X3-FT

STATE OF WISCONSIN
DEPARTMENT OF TRANSPORTATION

APPROVED
6/5/2012 — DATE
/S/ Jerry H. Zoda — ROADWAY STANDARDS DEVELOPMENT ENGINEER
FHWA

6

6

S.D.D. 8 C 7-1

S.D.D. 8 C 7-1

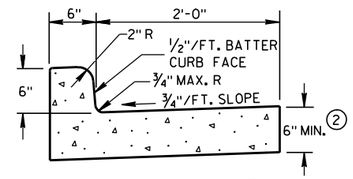

TYPES A & D ①

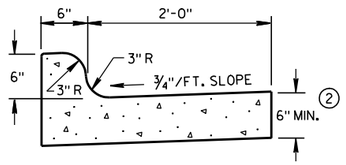

TYPES K & L ①

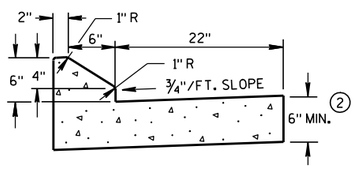

6" SLOPED CURB TYPES G & J ①

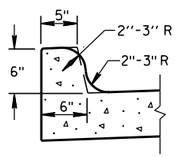

OPTIONAL CURB SHAPE FOR TYPES K & L ①

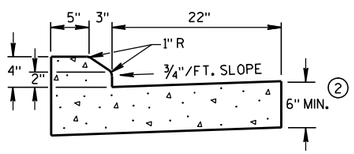

4" SLOPED CURB TYPES G & J ①

CONCRETE CURB & GUTTER 30"

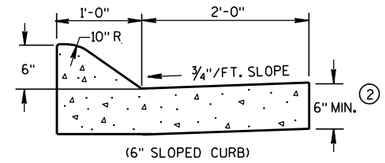

(6" SLOPED CURB)

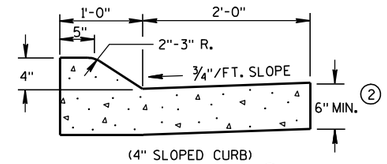

(4" SLOPED CURB)

TYPES A & D ①

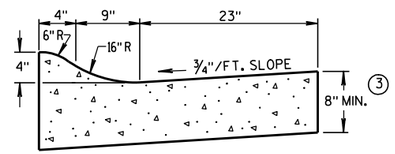

4" SLOPED CURB TYPES R & T ① ④

CONCRETE CURB & GUTTER 36"

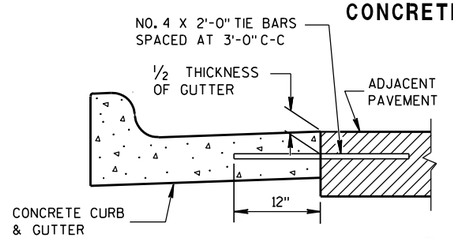

TYPICAL TIE BAR LOCATION ①

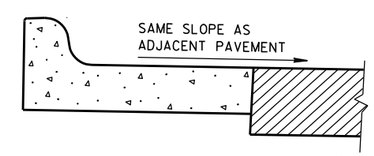

REVERSE SLOPE GUTTER ⑤
(TYPICAL FOR ALL CURB & GUTTER TYPES)

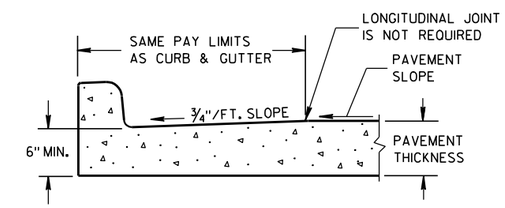

PARTIAL SECTION OF PAVEMENT WITH INTEGRAL CURB & GUTTER

GENERAL NOTES

DETAILS OF CONSTRUCTION, MATERIALS AND WORKMANSHIP NOT SHOWN ON THIS DRAWING SHALL CONFORM TO THE PERTINENT REQUIREMENTS OF THE CONTRACT.

PAVEMENT TIES AND TIE BARS SHALL BE EPOXY COATED IN CONFORMANCE WITH SUBSECTION 505.2.6.2 OF THE STANDARD SPECIFICATIONS.

INTEGRAL CURB & GUTTER SHALL CONFORM TO THE DETAILS SHOWN FOR CONCRETE CURB & GUTTER INCLUDING THE TRANSVERSE GUTTER SLOPE. A LONGITUDINAL CONSTRUCTION JOINT IS NOT REQUIRED WITH INTEGRAL CURB AND GUTTER.

WHERE THE TRANSVERSE JOINTS IN THE PAVEMENT ARE REQUIRED TO BE SEALED, THE JOINTS IN THE INTEGRAL CURB AND GUTTER SHALL BE SEALED TO THE FACE OF CURB WITH THE SAME TYPE OF SEALANT. THE COST OF FURNISHING AND INSTALLING THIS SEALANT SHALL BE INCIDENTAL TO THE ITEM CONCRETE CURB AND GUTTER.

UNLESS OTHERWISE SHOWN ON THE TYPICAL CROSS SECTIONS, THE BASE AGGREGATE AND COMMON EXCAVATION LIMITS ARE 2'-0" BEHIND THE BACK OF CURBS.

① TIE BARS ARE REQUIRED FOR CURB AND GUTTER TYPES A, G, K AND R.

② THE BOTTOM OF CURB AND GUTTER MAY BE CONSTRUCTED EITHER LEVEL OR PARALLEL TO THE SLOPE OF THE SUBGRADE OR BASE AGGREGATE PROVIDED A 6" MINIMUM GUTTER THICKNESS IS MAINTAINED.

③ THE BOTTOM OF CURB AND GUTTER MAY BE CONSTRUCTED EITHER LEVEL OR PARALLEL TO THE SLOPE OF THE SUBGRADE OR BASE AGGREGATE PROVIDED A 8" MINIMUM GUTTER THICKNESS IS MAINTAINED.

④ THE FACE OF CURB IS 6" FROM THE BACK OF CURB.

⑤ WHEN REVERSE SLOPE GUTTER IS REQUIRED, THE LOCATION(S) WILL BE SHOWN ELSEWHERE IN THE PLAN.

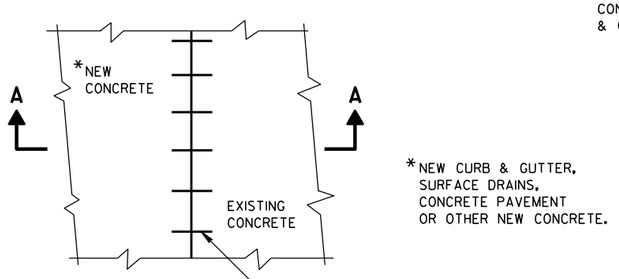

PLAN VIEW

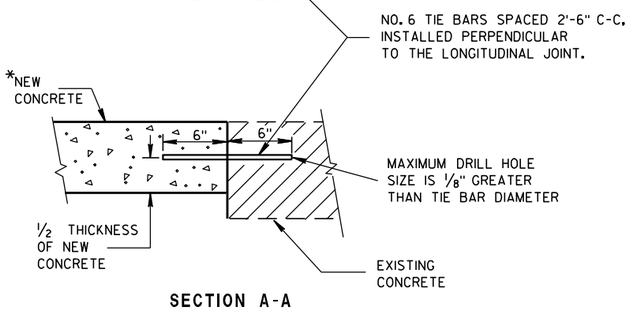

SECTION A-A

TIE BARS DRILLED INTO EXISTING PAVEMENT

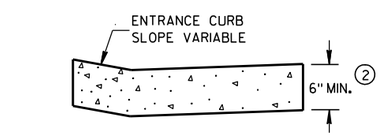

DRIVEWAY ENTRANCE CURB
(WHEN DIRECTED BY THE ENGINEER)

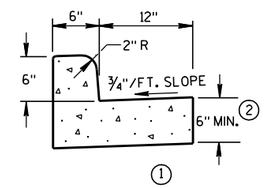

① TYPES A & D

CONCRETE CURB & GUTTER 18"

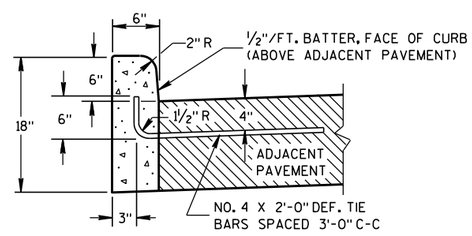

① TYPES A & D

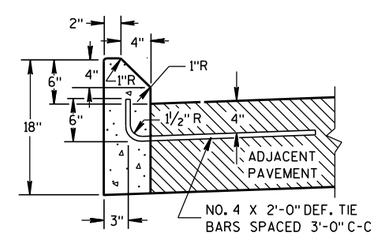

① TYPES G & J

CONCRETE CURB

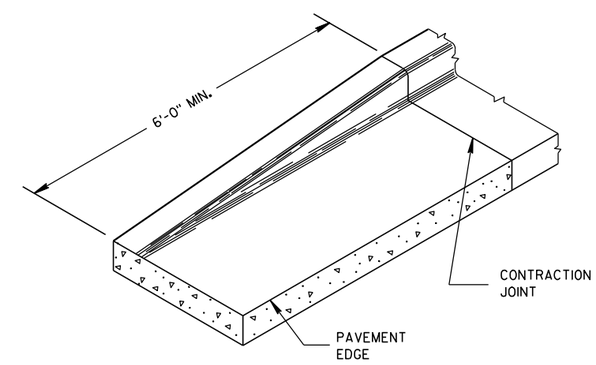

END SECTION CURB & GUTTER

CONCRETE CURB, CONCRETE CURB & GUTTER AND TIES

STATE OF WISCONSIN
DEPARTMENT OF TRANSPORTATION

APPROVED
9/4/08 — DATE
/S/ Jerry H. [illegible] — ROADWAY STANDARDS ENGINEER
FHWA

6

S.D.D. 8 D 1-17

GENERAL NOTES

DETAILS OF CONSTRUCTION, MATERIALS AND WORKMANSHIP NOT SHOWN ON THIS DRAWING SHALL CONFORM TO PERTINENT REQUIREMENTS OF THE STANDARD SPECIFICATIONS AND APPLICABLE SPECIAL PROVISIONS.

WELDED STEEL WIRE FABRIC SHALL BE IN ACCORDANCE WITH AASHTO SPECIFICATION M55.

① JOINTS SHALL BE 1/8 TO 1/4 INCH WIDE BY 1 1/2 INCHES DEEP AND SPACED AT UNIFORM INTERVALS OF APPROXIMATELY 4 FEET.

② GEOTEXTILE FABRIC TYPE "R" SHALL UNDERLAY THE FULL LENGTH AND WIDTH OF THE CONCRETE SURFACE DRAIN AND RIPRAP.

③ CONCRETE SURFACE DRAIN WITHOUT CURB AND GUTTER MAY BE USED ON BACKSLOPES WHEN SPECIFIED

ASPHALTIC FLUME

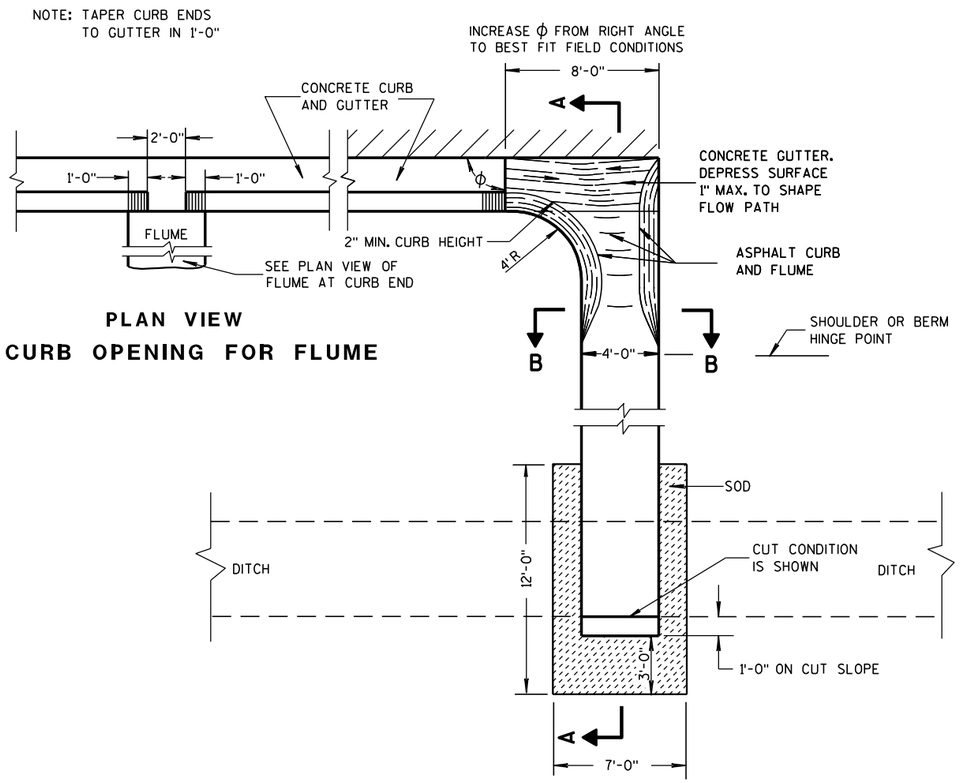

PLAN VIEW
CURB OPENING FOR FLUME

PLAN VIEW
FLUME AT CURB END

③ CONCRETE SURFACE DRAIN

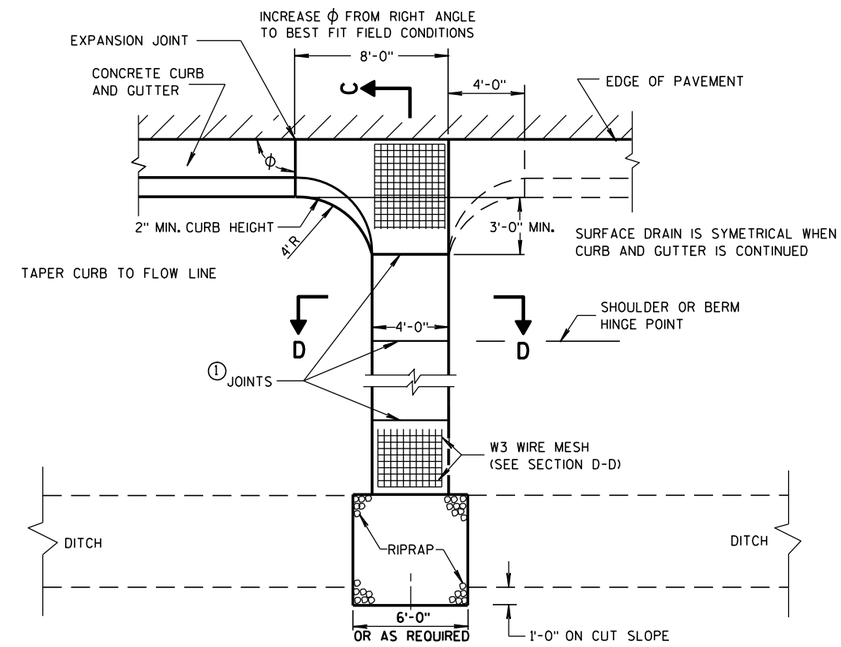

PLAN VIEW

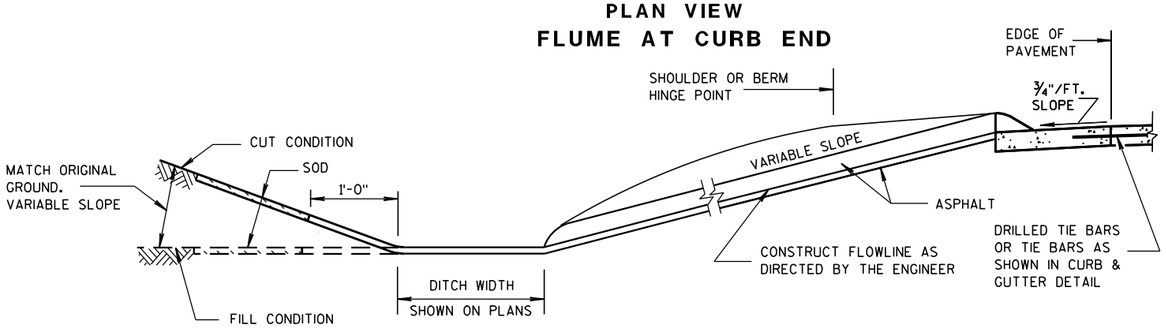

SECTION A-A

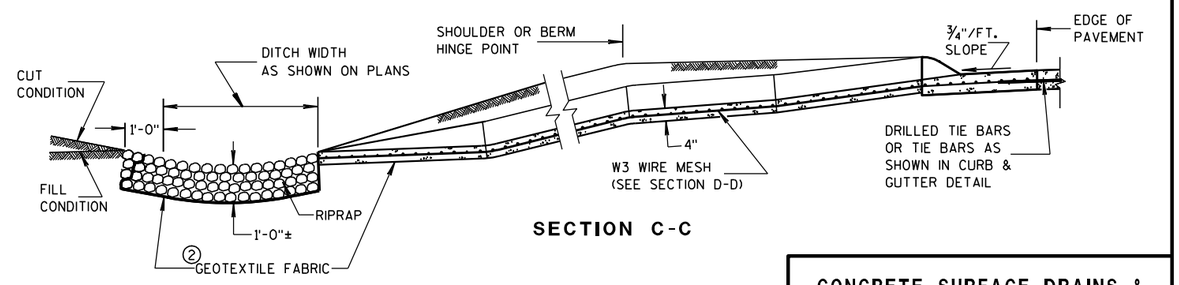

SECTION C-C

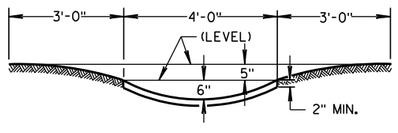

SECTION B-B

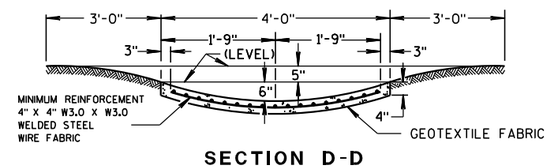

SECTION D-D

CONCRETE SURFACE DRAINS & ASPHALTIC FLUMES

STATE OF WISCONSIN
DEPARTMENT OF TRANSPORTATION

APPROVED
9-4-08 — DATE
/S/ Jerry H. Zogg — ROADWAY STANDARDS ENGINEER
FHWA

6

S.D.D. 8 D 4-5

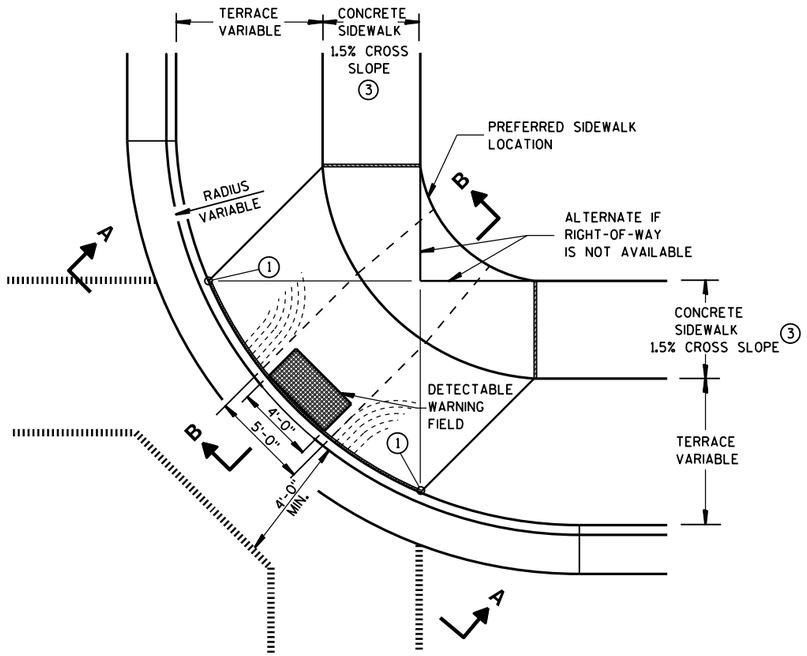

PLAN VIEW

TYPE 1 RAMP

(CENTER OF CORNER RADIUS)

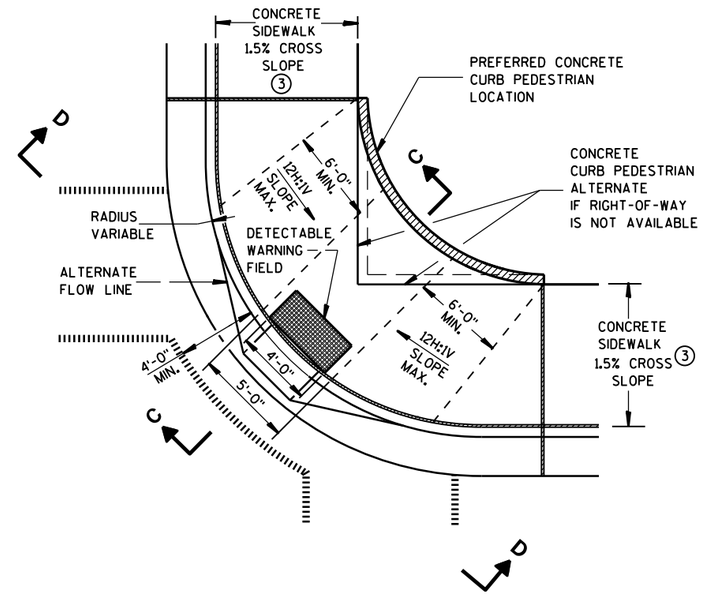

PLAN VIEW

TYPE 1-A RAMP

(NO TERRACE)

GENERAL NOTES

DETAILS OF CONSTRUCTION, MATERIALS AND WORKMANSHIP NOT SHOWN ON THIS DRAWING SHALL CONFORM TO THE PERTINENT REQUIREMENTS OF THE STANDARD SPECIFICATIONS AND THE APPLICABLE SPECIAL PROVISIONS.

RAMPS SHALL BE BUILT AT 12H:1V OR FLATTER. WHEN NECESSARY, THE SIDEWALK ELEVATION MAY BE LOWERED TO MEET THE HIGH POINT ON THE RAMP.

TYPE 1 RAMPS SHALL HAVE A NORMAL SIDEWALK APRON AND CURB ON BOTH SIDES OF RAMP.

DETECTABLE WARNING FIELD SHALL BE MEASURED AND PAID BY THE SQUARE FOOT AS "CURB RAMP DETECTABLE WARNING FIELD". THE CONCRETE PEDESTRIAN CURB, IF NEEDED, SHALL BE MEASURED AND PAID BY THE LINEAL FOOT AS "CONCRETE CURB PEDESTRIAN". CONCRETE SIDEWALK IN THE CURB RAMP AREA SHALL BE MEASURED AND PAID BY THE SQUARE FOOT AS CONCRETE SIDEWALK, INCLUDING THE AREA UNDER THE DETECTABLE WARNING FIELD.

SELECT CURB RAMP DETECTABLE WARNING FIELD MATERIALS AND DEVICES FROM THE DEPARTMENT'S APPROVED MATERIALS LIST. THE COLOR OF THE DETECTABLE WARNING FIELD IS SPECIFIED ELSEWHERE AND IS INCIDENTAL TO THE BID ITEM OF "CURB RAMP DETECTABLE WARNING FIELD".

DETECTABLE WARNING FIELDS THAT ARE INSTALLED AS A GROUP OR SIDE BY SIDE, SHALL BE FROM THE SAME MANUFACTURER.

SURFACE TEXTURE OF THE RAMP SHALL BE OBTAINED BY COARSE BROOMING TRANSVERSE TO THE SLOPE OF THE RAMP.

① THIS POINT IS AN EXTENSION OF OUTSIDE EDGE OF APPROACHING SIDEWALK WHERE IT MEETS THE BACK OF CONCRETE CURB.

② GRADE CHANGE BETWEEN GUTTER FLAG SLOPE AND THE CURB RAMP SLOPE SHALL NOT EXCEED 11%. PROVIDE DRAINAGE AWAY FROM CURB RAMP AT GUTTER FLAG INTERFACE.

③ ±0.5% CONSTRUCTION TOLERANCE IN SIDEWALK CROSS SLOPE. THE SIDEWALK CROSS SLOPE SHALL NOT EXCEED 2% WITHOUT PRIOR APPROVAL FROM THE ENGINEER.

LEGEND

- ½" EXPANSION JOINT-SIDEWALK
- CONTRACTION JOINT FIELD LOCATED
- PAVEMENT MARKING CROSSWALK (WHITE)
- ALTERNATIVE LAYOUT

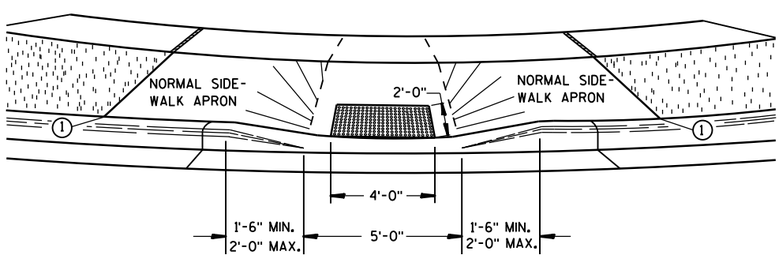

VIEW A-A

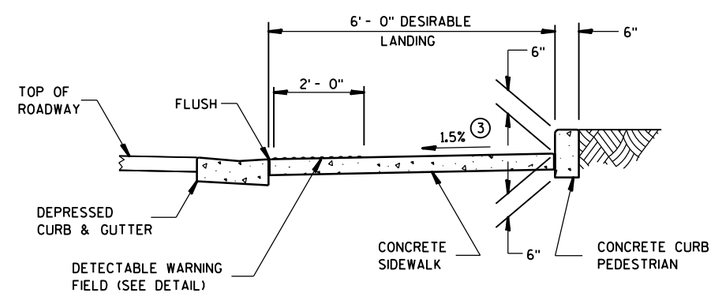

SECTION C-C

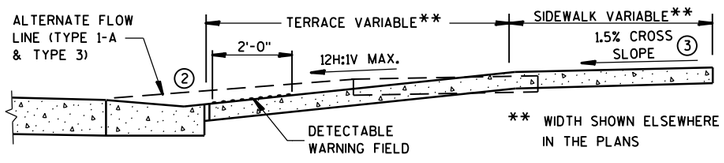

SECTION B-B

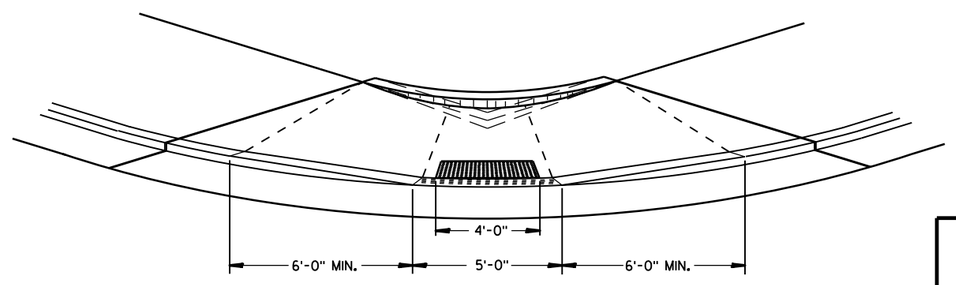

VIEW D-D

CURB RAMPS
TYPES 1 AND 1-A

STATE OF WISCONSIN
DEPARTMENT OF TRANSPORTATION

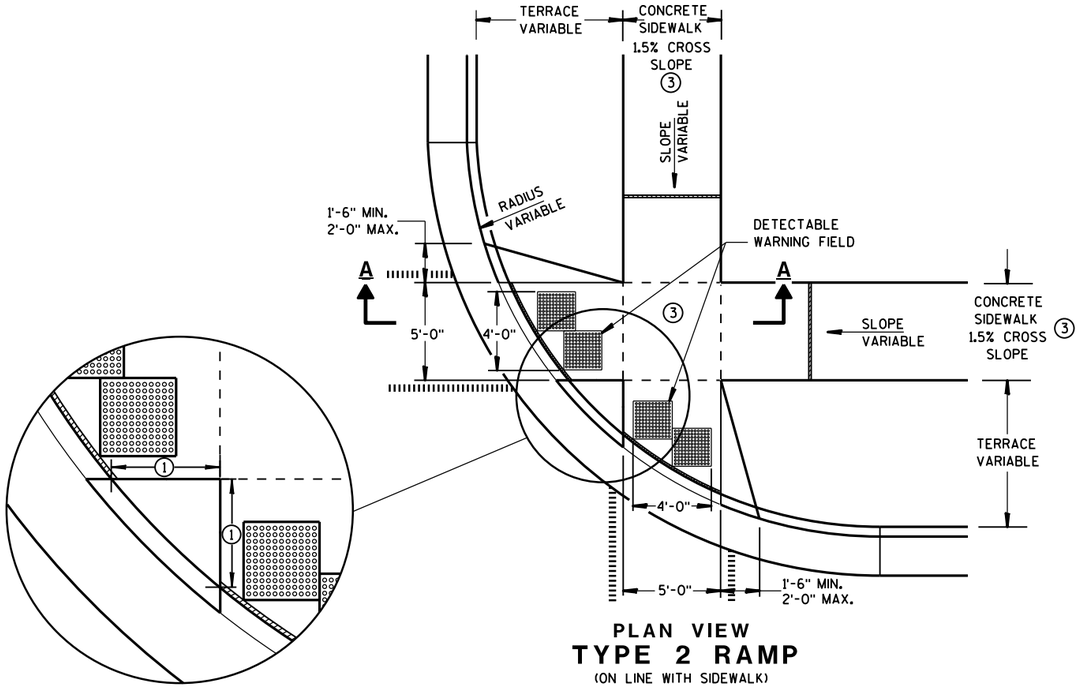

PLAN VIEW
TYPE 2 RAMP
(ON LINE WITH SIDEWALK)

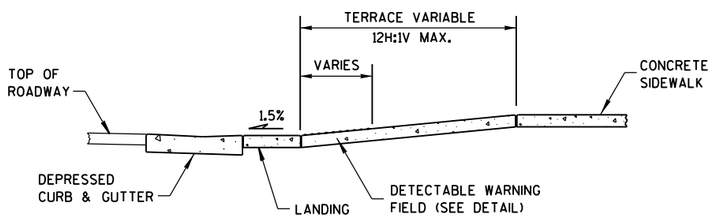

SECTION A-A

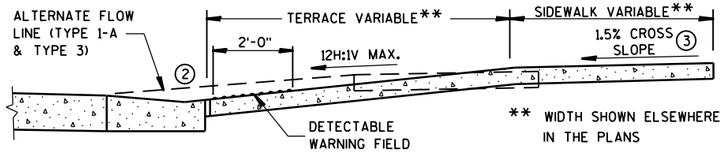

SECTION B-B

GENERAL NOTES

USE THE TYPE 3 RAMP ONLY WHEN A TYPE 1 OR TYPE 2 CANNOT BE ACHIEVED BECAUSE OF FIELD CONDITIONS.

DETECTABLE WARNING FIELDS THAT ARE INSTALLED AS A GROUP OR SIDE BY SIDE, SHALL BE FROM THE SAME MANUFACTURER.

① WHEN THIS DISTANCE IS LESS THAN 6'-0" IT MAY BE DIFFICULT TO ACHIEVE A 12H:1V SLOPE, OR FLATTER, ON THE RAMP. REDUCE CURB HEIGHT IN TRIANGLE AREA TO ACHIEVE 12H:1V SLOPE, OR FLATTER, ON RAMP. 2" MINIMUM CURB HEIGHT.

② GRADE CHANGE BETWEEN GUTTER FLAG SLOPE AND THE CURB RAMP SLOPE SHALL NOT EXCEED 11%. PROVIDE DRAINAGE AWAY FROM CURB RAMP AT GUTTER FLAG INTERFACE.

③ ±0.5% CONSTRUCTION TOLERANCE IN SIDEWALK CROSS SLOPE. THE SIDEWALK CROSS SLOPE SHALL NOT EXCEED 2% WITHOUT PRIOR APPROVAL FROM THE ENGINEER.

LEGEND

- ½" EXPANSION JOINT-SIDEWALK
- CONTRACTION JOINT FIELD LOCATED
- PAVEMENT MARKING CROSSWALK (WHITE)
- ALTERNATIVE LAYOUT

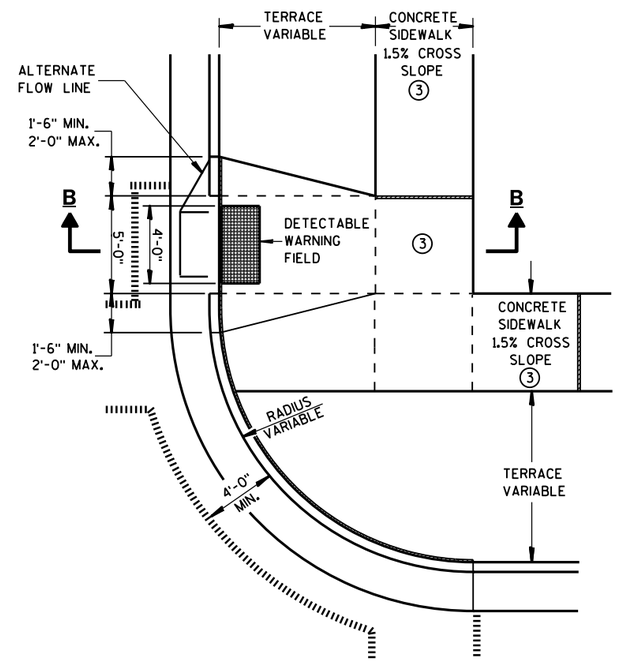

PLAN VIEW
TYPE 3 RAMP
(OUTSIDE OF CROSSWALK AREA)

6

6

CURB RAMPS
TYPES 2 AND 3

STATE OF WISCONSIN
DEPARTMENT OF TRANSPO

S.D.D. 8 D 5-15b

S.D.D. 8 D 5-15b

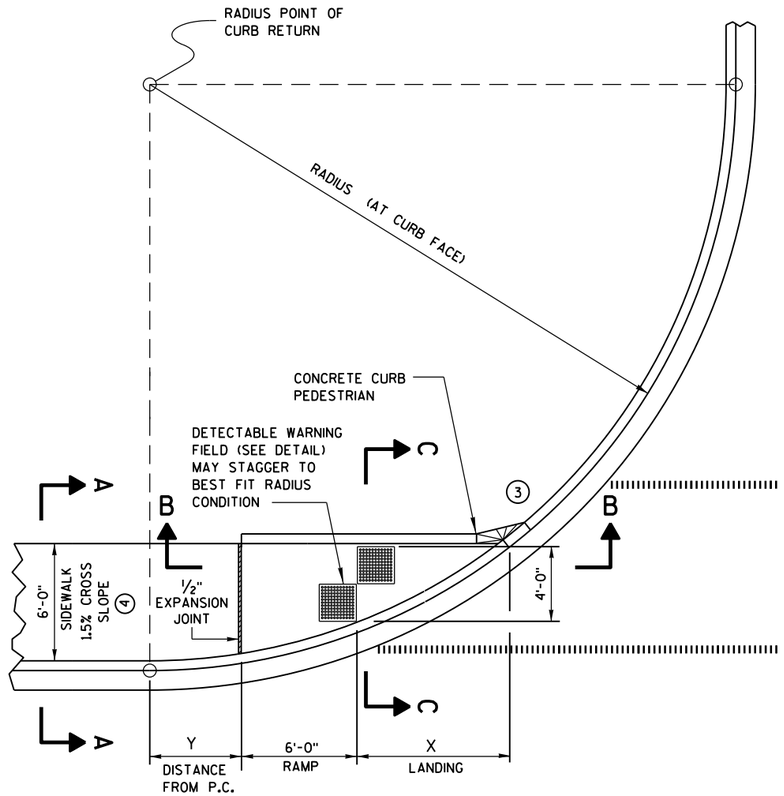

CURB RAMP TYPE 4A
PLAN VIEW

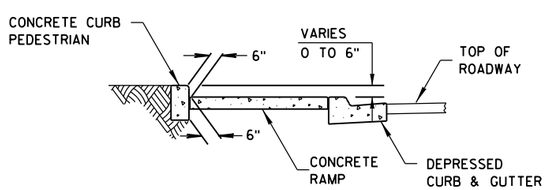

SECTION C-C FOR TYPE 4A

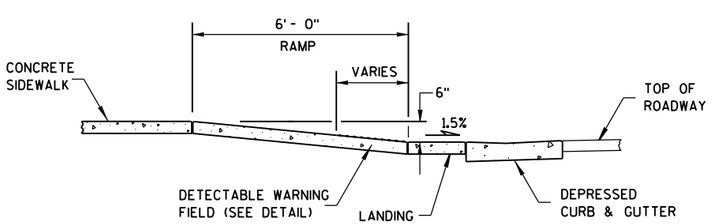

SECTION B-B FOR TYPE 4A

RADIUS (AT CURB FACE)	X	Y
20 FEET	6'-1¾"	2'-7¼"
30 FEET	7'-11¾"	4'-8¼"
40 FEET	9'-5¼"	6'-5"
50 FEET	10'-8¾"	7'-11¼"
60 FEET	11'-10¼"	9'-3½"

INTERMEDIATE RADII CAN BE INTERPOLATED

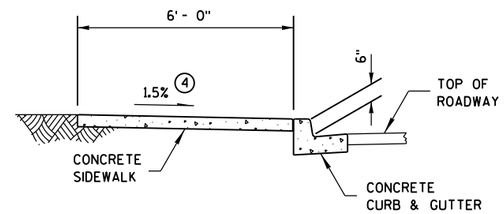

SECTION A-A FOR TYPE 4A

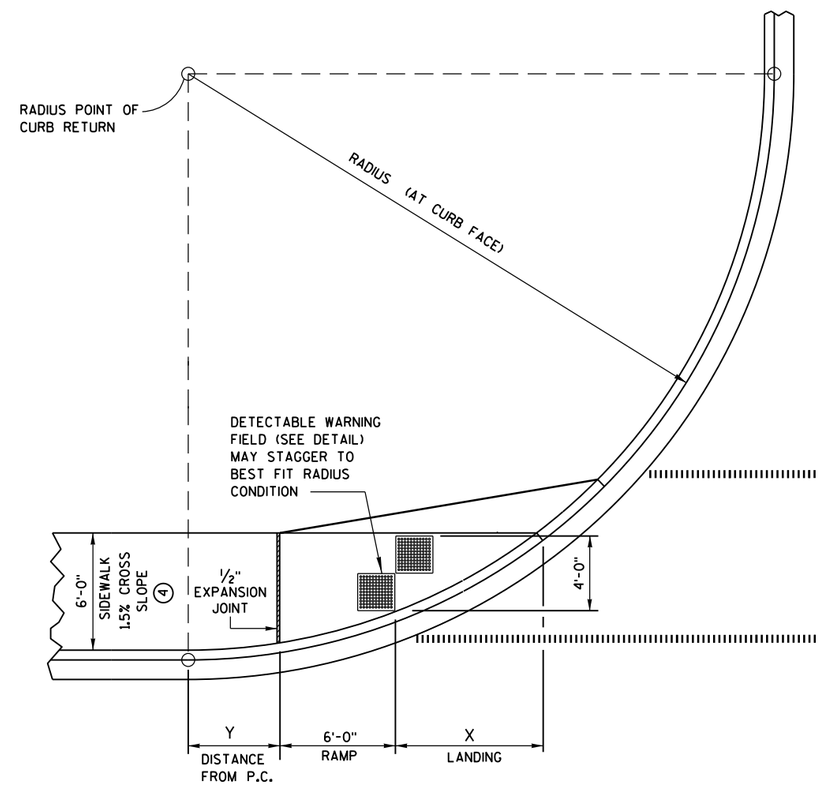

CURB RAMP TYPE 4A1
PLAN VIEW

GENERAL NOTES

AVOID PLACING DRAINAGE STRUCTURES, JUNCTION BOXES OR OTHER OBSTRUCTIONS IN FRONT OF RAMP ACCESS AREAS.

RAMP SLOPES SHALL NOT BE STEEPER THAN 12:1.

DETECTABLE WARNING FIELDS THAT ARE INSTALLED AS A GROUP OR SIDE BY SIDE, SHALL BE FROM THE SAME MANUFACTURER.

(3) INSTALL TRANSITION NOSE. (INCIDENTAL TO OTHER PAY ITEMS.) DO NOT MARK TRANSITION NOSE.

(4) ±0.5% CONSTRUCTION TOLERANCE IN SIDEWALK CROSS SLOPE. THE SIDEWALK CROSS SLOPE SHALL NOT EXCEED 2% WITHOUT PRIOR APPROVAL FROM THE ENGINEER.

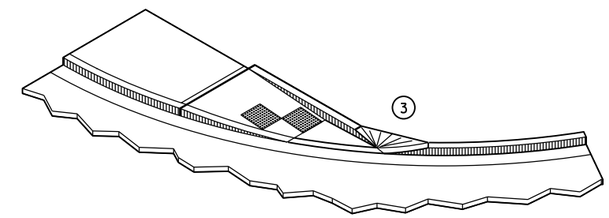

ISOMETRIC VIEW FOR TYPE 4A

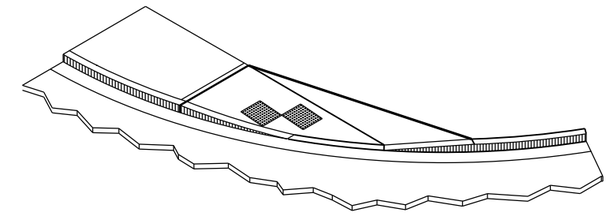

ISOMETRIC VIEW FOR TYPE 4A1

LEGEND

- ½" EXPANSION JOINT-SIDEWALK
- CONTRACTION JOINT FIELD LOCATED
- PAVEMENT MARKING CROSSWALK (WHITE)

CURB RAMPS
TYPES 4A AND 4A1

STATE OF WISCONSIN
DEPARTMENT OF TRANSPOR

6

6

S.D.D. 8 D 5-15c

S.D.D. 8 D 5-15c

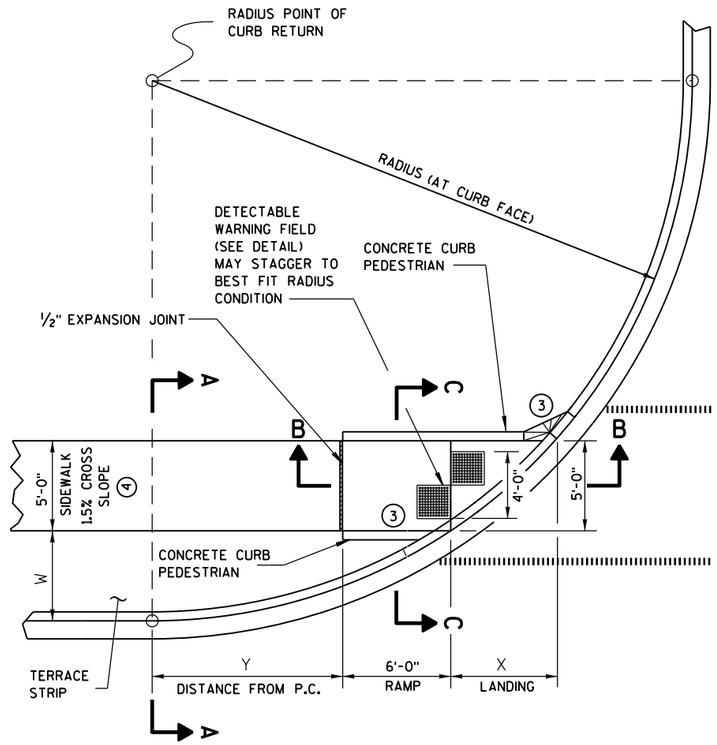

CURB RAMP TYPE 4B
PLAN VIEW

LEGEND

- ½" EXPANSION JOINT-SIDEWALK
- CONTRACTION JOINT FIELD LOCATED
- PAVEMENT MARKING CROSSWALK (WHITE)

RADIUS (AT CURB FACE)	W = 3' - 0"		W = 4' - 0"		W = 5' - 0"		W = 6' - 0"		W = 7' - 0"	
	X	Y	X	Y	X	Y	X	Y	X	Y
20 FEET	5'-5½"	4'-6½"	4'-8½"	6'-0"	4'-1"	7'-2¾"	3'-7"	8'-3½"	3'-1½"	9'-2½"
30 FEET	7'-3¾"	7'-1"	6'-5½"	8'-11½"	5'-9¼"	10'-7"	5'-2½"	12'-0"	4'-8¾"	13'-3¼"
40 FEET	8'-9½"	9'-2½"	7'-10"	11'-5¼"	7'-1"	13'-4½"	6'-5¾"	15'-¾"	5'-11½"	16'-7¼"
50 FEET	10'-¾"	11'-¾"	9'-¼"	13'-7¼"	8'-2½"	15'-9½"	7'-6½"	17'-9"	6'-11¾"	19'-6¼"
60 FEET	11'-2½"	12'-8¾"	10'-¾"	15'-6½"	9'-2¼"	17'-11¾"	8'-5¾"	20'-1¾"	7'-10½"	22'-1½"

INTERMEDIATE RADII CAN BE INTERPOLATED

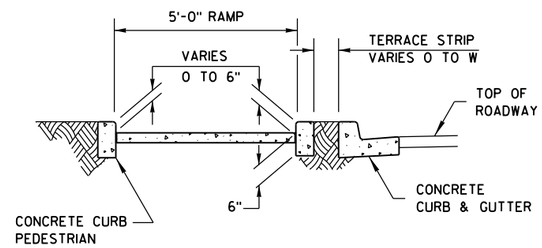

SECTION C-C FOR TYPE 4B

GENERAL NOTES

AVOID PLACING DRAINAGE STRUCTURES, JUNCTION BOXES OR OTHER OBSTRUCTIONS IN FRONT OF RAMP ACCESS AREAS.

RAMP SLOPES SHALL NOT BE STEEPER THAN 12:1.

DETECTABLE WARNING FIELDS THAT ARE INSTALLED AS A GROUP OR SIDE BY SIDE, SHALL BE FROM THE SAME MANUFACTURER.

(3) INSTALL TRANSITION NOSE. (INCIDENTAL TO OTHER PAY ITEMS.) DO NOT MARK TRANSITION NOSE.

(4) ±0.5% CONSTRUCTION TOLERANCE IN SIDEWALK CROSS SLOPE. THE SIDEWALK CROSS SLOPE SHALL NOT EXCEED 2% WITHOUT PRIOR APPROVAL FROM THE ENGINEER.

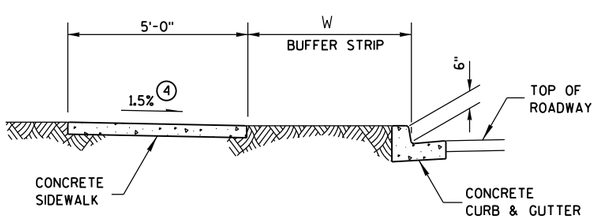

SECTION A-A FOR TYPE 4B

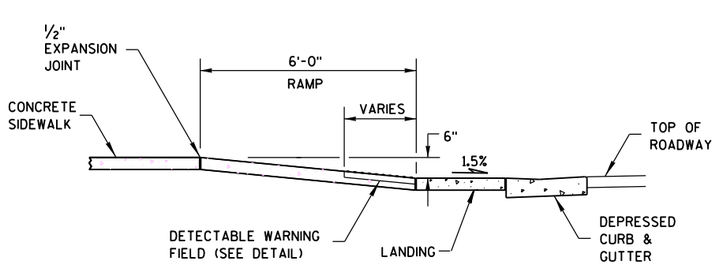

SECTION B-B FOR TYPE 4B

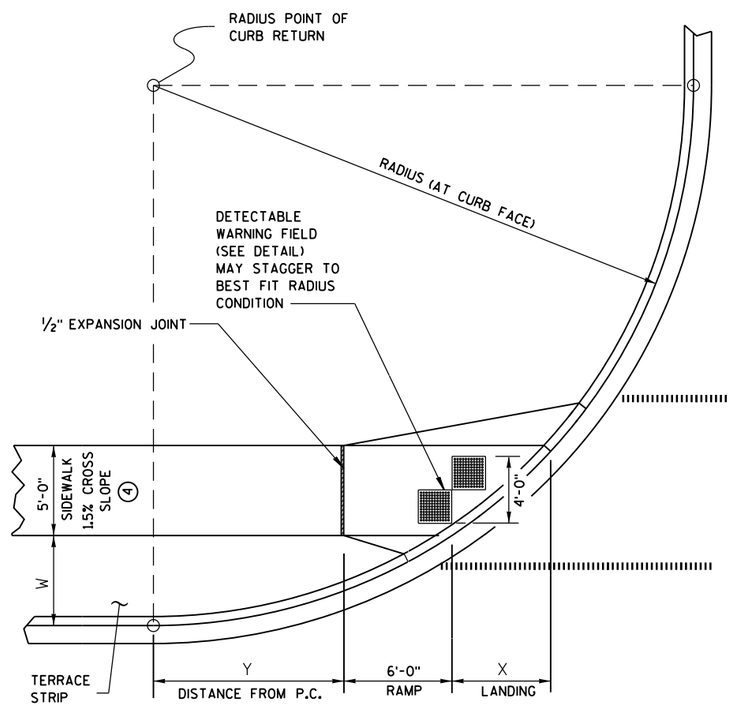

CURB RAMP TYPE 4B1
PLAN VIEW

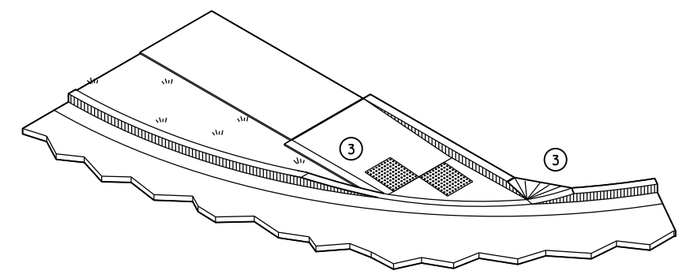

ISOMETRIC VIEW FOR TYPE 4B

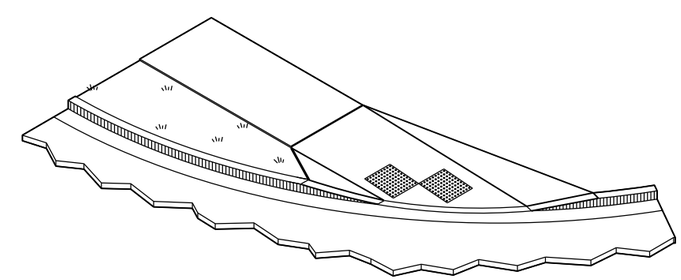

ISOMETRIC VIEW FOR TYPE 4B1

CURB RAMPS
TYPE 4B AND 4B1

STATE OF WISCONSIN
DEPARTMENT OF TRANSPOR

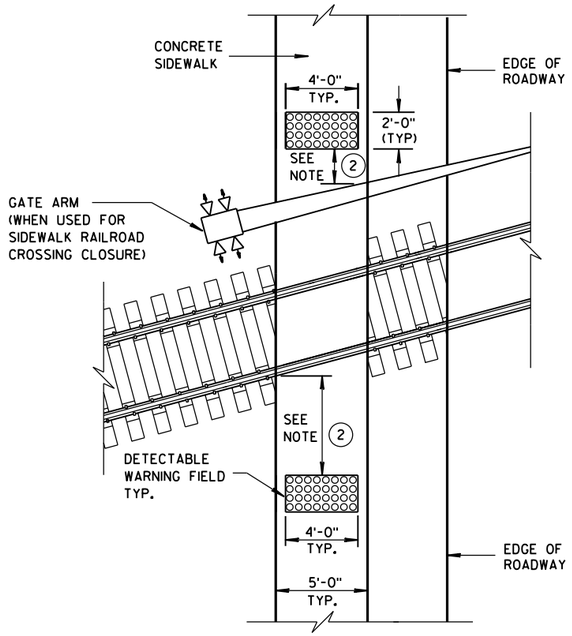

TYPE 8
DETECTABLE WARNINGS AT RAILROAD CROSSING

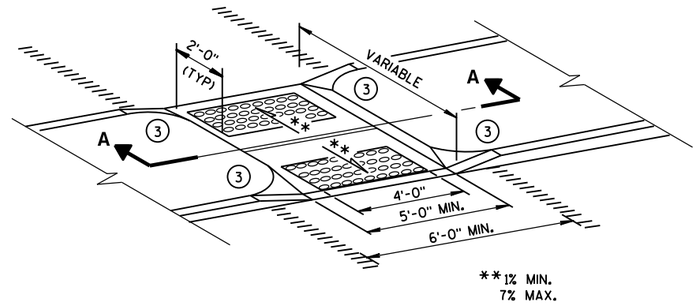

MEDIAN ISLAND
NON-ELEVATED CROSSING
TYPE 5

GENERAL NOTES

SIDEWALK CROSS SLOPE SHALL NOT EXCEED 2%.

DETECTABLE WARNING FIELDS THAT ARE INSTALLED AS A GROUP OR SIDE BY SIDE, SHALL BE FROM THE SAME MANUFACTURER.

1. SLOPE SIDEWALK TOWARD LANDING AS SHOWN WHERE THERE IS NO TERRACE OR WHERE THE TERRACE WIDTH IS LESS THAN 6 FEET WIDE.
2. THE EDGE OF THE DETECTABLE WARNING FIELD NEAREST TO A RAILROAD CROSSING SHALL BE 1.5 FEET ± 0.1' FROM THE FACE OF THE GATE ARM IF THE GATE ARM EXTENDS ACROSS THE SIDEWALK. WHERE THERE IS NO PEDESTRIAN GATE, THE EDGE OF THE DETECTABLE WARNING FIELD NEAREST TO THE RAILROAD CROSSING SHALL BE 15 FEET FROM THE NEAREST RAIL.
3. INSTALL TRANSITION NOSE. (INCIDENTAL TO OTHER PAY ITEMS.) DO NOT MARK TRANSITION NOSE.
4. ±0.5% CONSTRUCTION TOLERANCE IN SIDEWALK CROSS SLOPE. THE SIDEWALK CROSS SLOPE SHALL NOT EXCEED 2% WITHOUT PRIOR APPROVAL FROM THE ENGINEER.

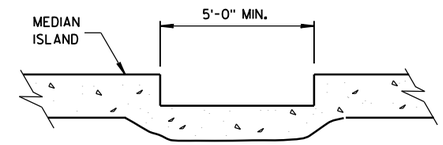

SECTION A-A

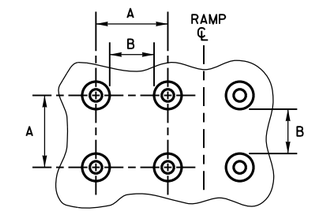

PLAN VIEW

	MIN.	MAX.
A	1.6"	2.4"
B	0.65"	1.5"
C	*	*
D	0.9"	1.4"

* THE C DIMENSION IS 50% TO 65% OF THE D DIMENSION.

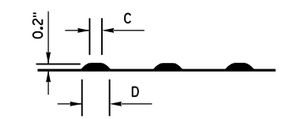

ELEVATION VIEW

TRUNCATED DOMES
DETECTABLE WARNING PATTERN DETAIL

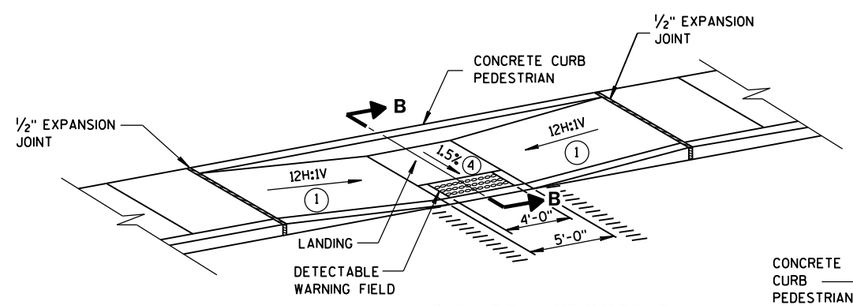

MID-BLOCK CROSSING
TYPE 7A

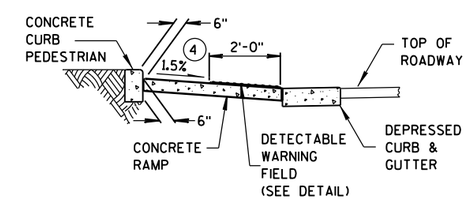

SECTION B-B

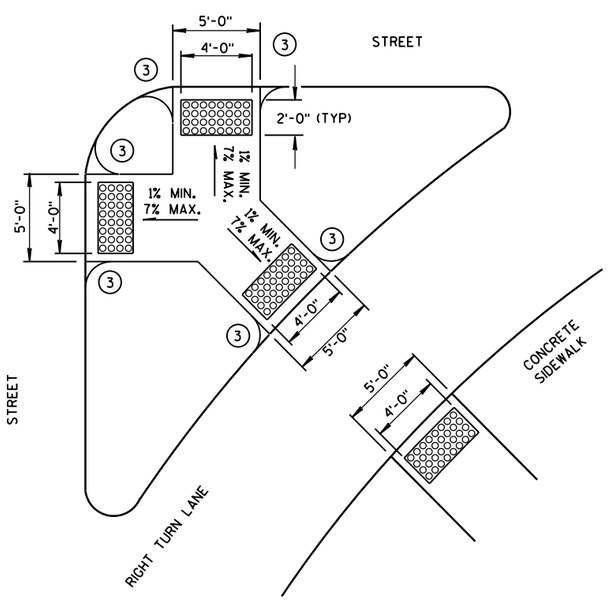

TYPE 6
DETECTABLE WARNING AT ISLANDS

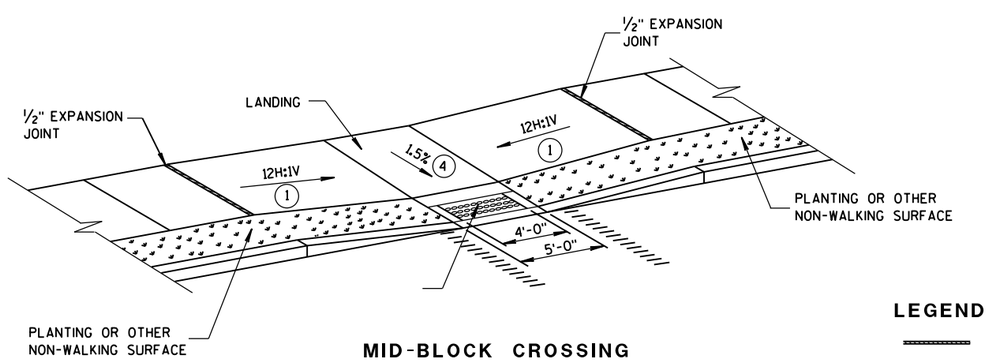

MID-BLOCK CROSSING
TYPE 7B

NOTE: THESE PARALLEL AND PARALLEL/PERPENDICULAR CURB RAMPS MAY BE USED AT INTERSECTIONS AND MID BLOCK LOCATIONS.

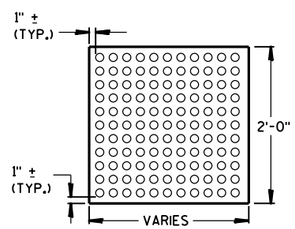

PLAN VIEW
DETECTABLE WARNING FIELD (TYPICAL)

LEGEND

- ½" EXPANSION JOINT-SIDEWALK
- CONTRACTION JOINT FIELD LOCATED
- PAVEMENT MARKING CROSSWALK (WHITE)

CURB RAMPS
TYPES 5, 6, 7A, 7B & 8

STATE OF WISCONSIN
DEPARTMENT OF TRANSPORTATION

APPROVED
2-6-2013 — DATE
/S/ Jerry H. Zogg — ROADWAY STANDARDS DEVELOPMENT ENGINEER
FHWA

6

S.D.D. 8 D 5-15e

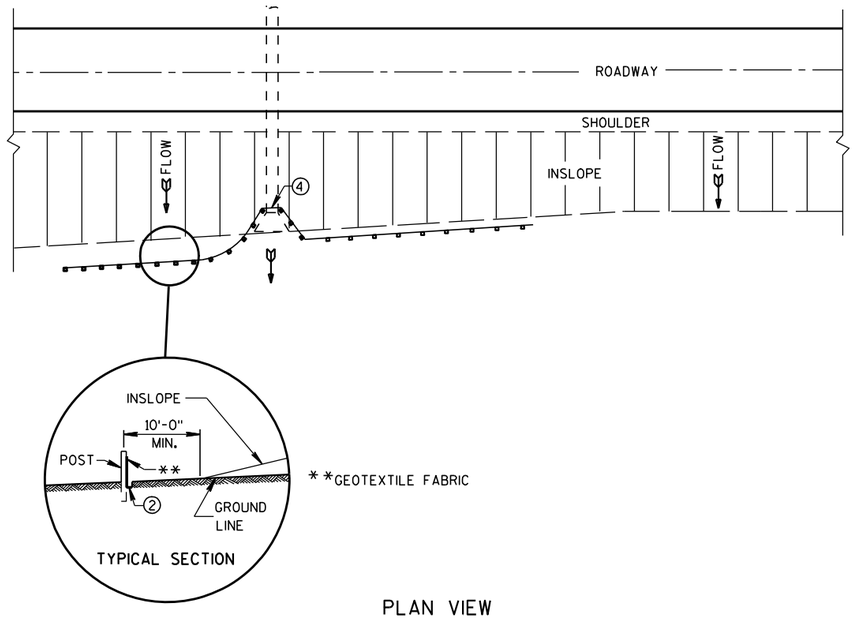

PLAN VIEW

TYPICAL APPLICATION OF SILT FENCE

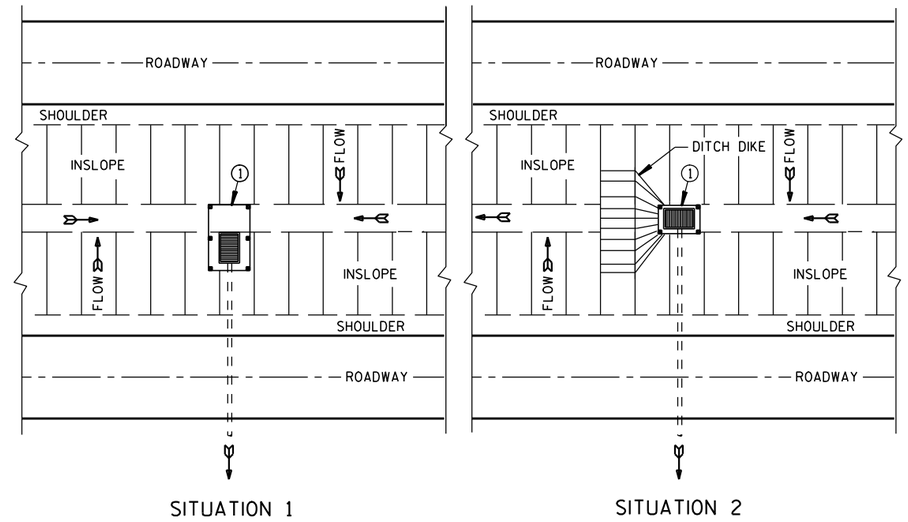

PLAN VIEW

SILT FENCE AT MEDIAN SURFACE DRAINS

GENERAL NOTES

DETAILS OF CONSTRUCTION NOT SHOWN ON THIS DRAWING SHALL CONFORM TO THE PERTINENT REQUIREMENTS OF THE STANDARD SPECIFICATIONS AND APPLICABLE SPECIAL PROVISIONS.

① HORIZONTAL BRACE REQUIRED WITH 2" X 4" WOODEN FRAME OR EQUIVALENT AT TOP OF POSTS.

② FOR MANUAL INSTALLATIONS THE TRENCH SHALL BE A MINIMUM OF 4" WIDE & 6" DEEP TO BURY AND ANCHOR THE GEOTEXTILE FABRIC. FOLD MATERIAL TO FIT TRENCH AND BACKFILL & COMPACT TRENCH WITH EXCAVATED SOIL.

③ WOOD POSTS SHALL BE A MINIMUM SIZE OF 1⅛" X 1⅛" OF OAK OR HICKORY.

④ SILT FENCE TO EXTEND ACROSS THE TOP OF THE PIPE.

⑤ CONSTRUCT SILT FENCE FROM A CONTINUOUS ROLL IF POSSIBLE BY CUTTING LENGTHS TO AVOID JOINTS. IF A JOINT IS NECESSARY USE ONE OF THE FOLLOWING TWO METHODS; A) OVERLAP THE END POSTS AND TWIST, OR ROTATE, AT LEAST 180 DEGREES. B) HOOK THE END OF EACH SILT FENCE LENGTH.

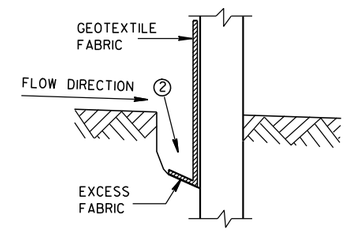

TRENCH DETAIL

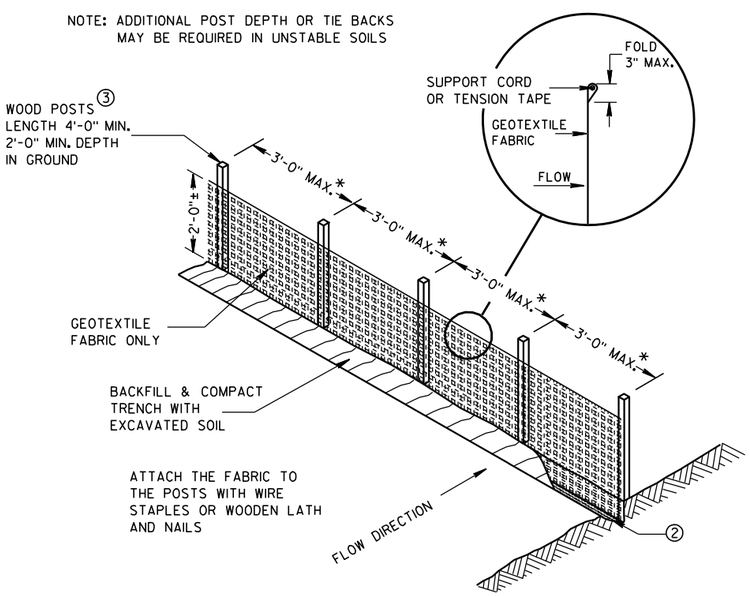

*NOTE: 8'-0" POST SPACING ALLOWED IF A WOVEN GEOTEXTILE FABRIC IS USED.

SILT FENCE

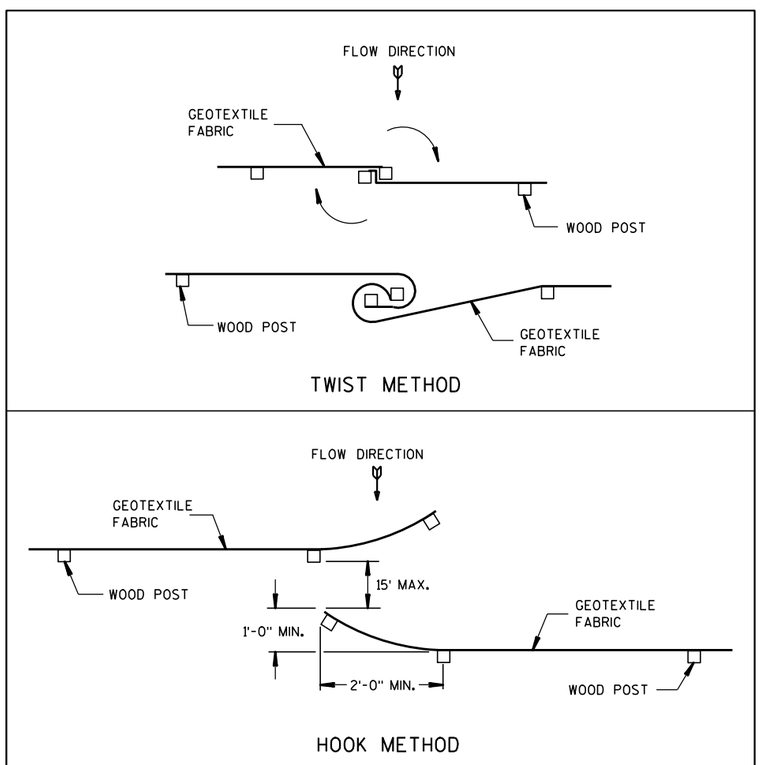

JOINING TWO LENGTHS OF SILT FENCE ⑤

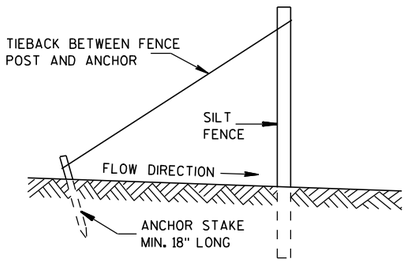

SILT FENCE TIE BACK

(WHEN REQUIRED BY THE ENGINEER)

SILT FENCE
STATE OF WISCONSIN DEPARTMENT OF TRANSPORTATION
APPROVED 4-29-05 /S/ Beth Cann----- DATE CHIEF ROADWAY DEVELOP ENGINEER FHWA

6

6

S.D.D. 8 E 9-6

S.D.D. 8 E 9-6

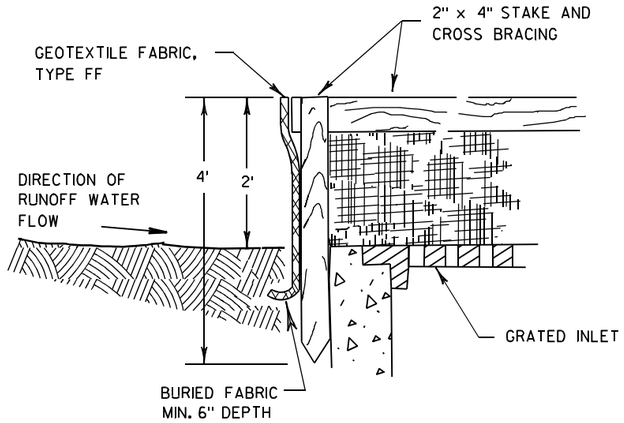

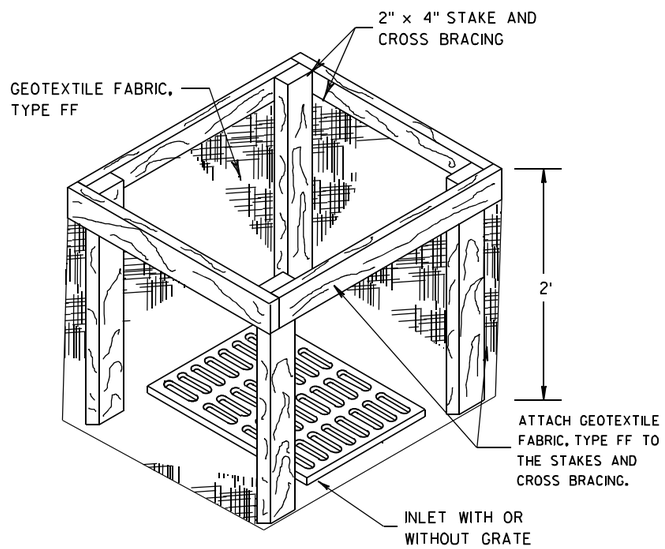

INLET PROTECTION, TYPE A

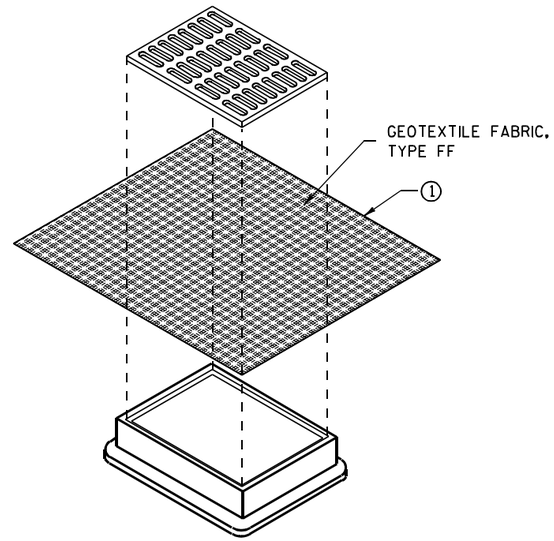

INLET PROTECTION, TYPE B (WITHOUT CURB BOX)

(CAN BE INSTALLED IN ANY INLET WITHOUT A CURB BOX)

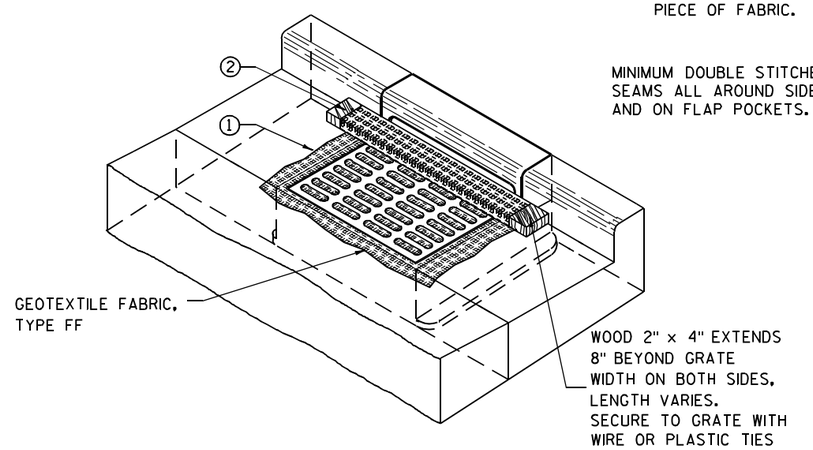

INLET PROTECTION, TYPE C (WITH CURB BOX)

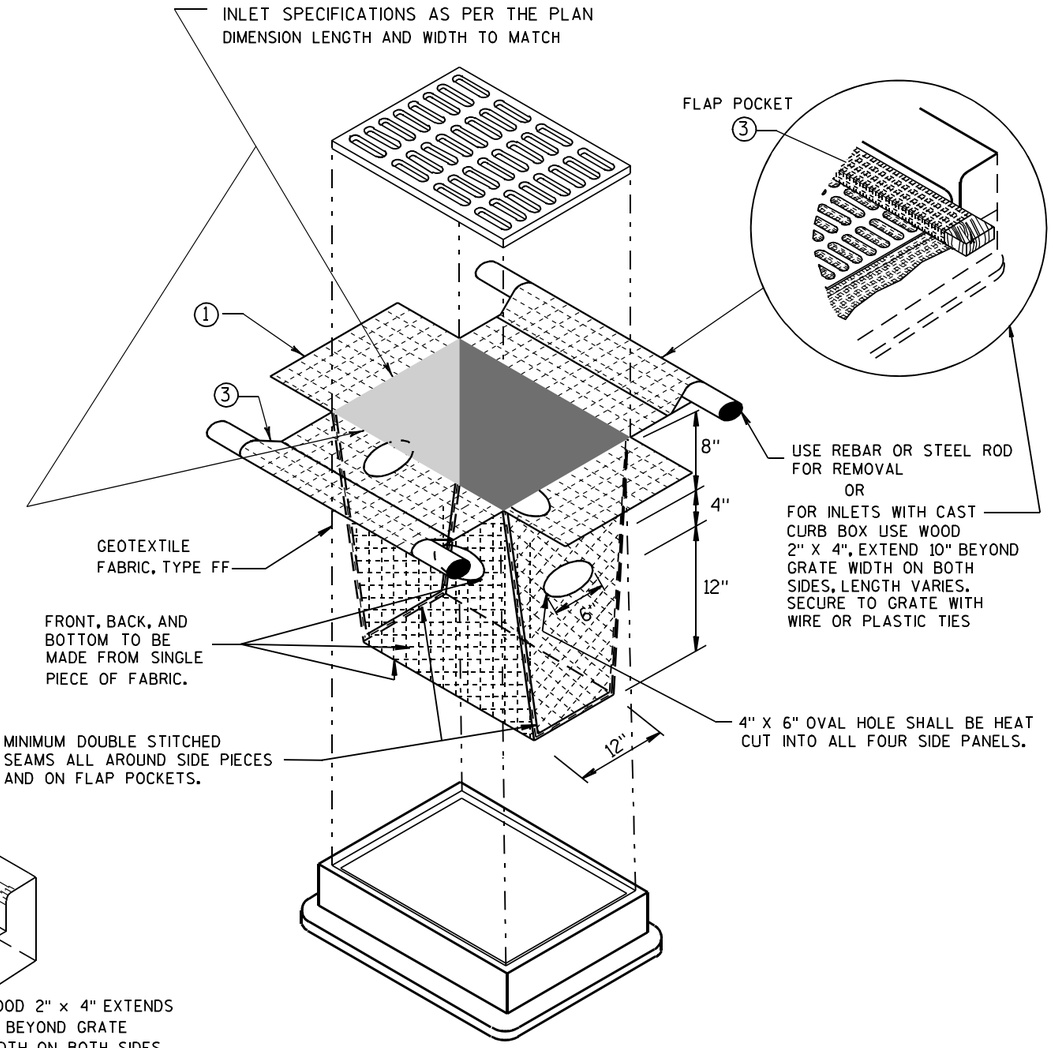

INLET PROTECTION, TYPE D

(CAN BE INSTALLED IN ANY INLET TYPE WITH OR WITHOUT A CURB BOX AS PER NOTE ②)

GENERAL NOTES

INLET PROTECTION DEVICES SHALL BE MAINTAINED OR REPLACED AT THE DIRECTION OF THE ENGINEER.

MANUFACTURED ALTERNATIVES APPROVED AND LISTED ON THE DEPARTMENT'S EROSION CONTROL PRODUCT ACCEPTABILITY LIST MAY BE SUBSTITUTED.

WHEN REMOVING OR MAINTAINING INLET PROTECTION, CARE SHALL BE TAKEN SO THAT THE SEDIMENT TRAPPED ON THE GEOTEXTILE FABRIC DOES NOT FALL INTO THE INLET. ANY MATERIAL FALLING INTO THE INLET SHALL BE REMOVED IMMEDIATELY.

① FINISHED SIZE, INCLUDING FLAP POCKETS WHERE REQUIRED, SHALL EXTEND A MINIMUM OF 10" AROUND THE PERIMETER TO FACILITATE MAINTENANCE OR REMOVAL.

② FOR INLET PROTECTION, TYPE C (WITH CURB BOX), AN ADDITIONAL 18" OF FABRIC IS WRAPPED AROUND THE WOOD AND SECURED WITH STAPLES. THE WOOD SHALL NOT BLOCK THE ENTIRE HEIGHT OF THE CURB BOX OPENING.

③ FLAP POCKETS SHALL BE LARGE ENOUGH TO ACCEPT WOOD 2X4.

INSTALLATION NOTES

TYPE B & C

TRIM EXCESS FABRIC IN THE FLOW LINE TO WITHIN 3" OF THE GRATE.

THE CONTRACTOR SHALL DEMONSTRATE A METHOD OF MAINTENANCE, USING A SEWN FLAP, HAND HOLDS OR OTHER METHOD TO PREVENT ACCUMULATED SEDIMENT FROM ENTERING THE INLET.

TYPE D

DO NOT INSTALL INLET PROTECTION TYPE D IN INLETS SHALLOWER THAN 30", MEASURED FROM THE BOTTOM OF THE INLET TO THE TOP OF THE GRATE.

TRIM EXCESS FABRIC IN THE FLOW LINE TO WITHIN 3" OF THE GRATE.

THE INSTALLED BAG SHALL HAVE A MINIMUM SIDE CLEARANCE, BETWEEN THE INLET WALLS AND THE BAG, MEASURED AT THE BOTTOM OF THE OVERFLOW HOLES, OF 3". WHERE NECESSARY THE CONTRACTOR SHALL CINCH THE BAG, USING PLASTIC ZIP TIES, TO ACHIEVE THE 3" CLEARANCE. THE TIES SHALL BE PLACED AT A MAXIMUM OF 4" FROM THE BOTTOM OF THE BAG.

INLET PROTECTION
TYPE A, B, C, AND D

STATE OF WISCONSIN
DEPARTMENT OF TRANSPORTATION

APPROVED
10/16/02 — DATE
/S/ Beth Cannon — CHIEF ROADWAY DEVELOPMENT ENGINEER
FHWA

6

S.D.D. 8 E 10-2

METAL APRON ENDWALLS

PIPE DIA. (IN.)	MIN. THICK. (Inches) STEEL	MIN. THICK. (Inches) ALUM.	DIMENSIONS (Inches) A (±1")	B (MAX.)	H (±1")	L (±1 1/2")	L1 ①	L2 ①	W (±2")	APPROX. SLOPE	BODY
12	.064	.060	6	6	6	21	12	17 1/2	24	2 1/2 to 1	1 Pc.
15	.064	.060	7	8	6	26	14	21 3/4	30	2 1/2 to 1	1 Pc.
18	.064	.060	8	10	6	31	15	28 1/4	36	2 1/2 to 1	1 Pc.
21	.064	.060	9	12	6	36	18	29 5/8	42	2 1/2 to 1	1 Pc.
24	.064	.075	10	13	6	41	18	37 1/4	48	2 1/2 to 1	1 Pc.
30	.079	.075	12	16	8	51	18	52 1/4	60	2 1/2 to 1	1 Pc.
36	.079	.105	14	19	9	60	24	59 3/4	72	2 1/2 to 1	2 Pc.
42	.109	.105	16	22	11	69	24	75 5/8	84	2 1/2 to 1	2 Pc.
48	.109	.105	18	27	12	78	24	81	90	2 1/4 to 1	3 Pc.
54	.109	.105	18	30	12	84	30	85 1/2	102	2 1/4 to 1	3 Pc.
60	.109×	.105×	18	33	12	87	—	—	114	2 to 1	3 Pc.
66	.109×	.105×	18	36	12	87	—	—	120	2 to 1	3 Pc.
72	.109×	.105×	18	39	12	87	—	—	126	2 to 1	3 Pc.
78	.109×	.105×	18	42	12	87	—	—	132	1 1/2 to 1	3 Pc.
84	.109×	.105×	18	45	12	87	—	—	138	1 1/2 to 1	3 Pc.
90	.109×	.105×	18	37	12	87	—	—	144	1 1/2 to 1	3 Pc.
96	.109×	.105×	18	35	12	87	—	—	150	1 1/2 to 1	3 Pc.

× EXCEPT CENTER PANEL
SEE GENERAL NOTES

REINFORCED CONCRETE APRON ENDWALLS

PIPE DIA. (IN.)	DIMENSIONS (Inches) T	A	B	C	D	E	G	APPROX. SLOPE
12	2	4	24	48 7/8	72 7/8	24	2	3 to 1
15	2 1/4	6	27	46	73	30	2 1/4	3 to 1
18	2 1/2	9	27	46	73	36	2 1/2	3 to 1
21	2 3/4	9	36	37 1/2	73 1/2	42	2 3/4	3 to 1
24	3	9 1/2	43 1/2	30	73 1/2	48	3	3 to 1
27	3 1/4	10 1/2	49 1/2	24	73 1/2	54	3 1/4	3 to 1
30	3 1/2	12	54	19 3/4	73 1/2	60	3 1/2	3 to 1
36	4	15	63	34 3/4	97 3/4	72	4	3 to 1
42	4 1/2	21	63	35	98	78	4 1/2	3 to 1
48	5	24	72	26	98	84	5	3 to 1
54	5 1/2	27	65	*33 1/4-**35	*98 1/4-**100	90	5 1/2	2 2/5 to 1
60	6	*30-**35	60	39	99	96	5	2 to 1
66	6 1/2	*24-**30	*72-**78	*21-**27	99	102	5 1/2	2 to 1
72	7	*24-**36	78	21	99	108	6	2 to 1
78	7 1/2	*24-**36	78	21	99	114	6 1/2	2 to 1
84	8	36	90 1/2	21	111 1/2	120	6 1/2	1 1/2 to 1
90	8 1/2	41	87 1/2	24	111 1/2	132	6 1/2	1 1/2 to 1

*MINIMUM
**MAXIMUM

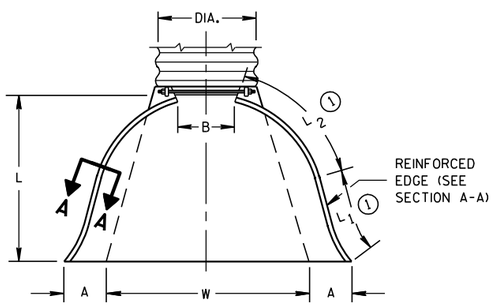

PLAN VIEW

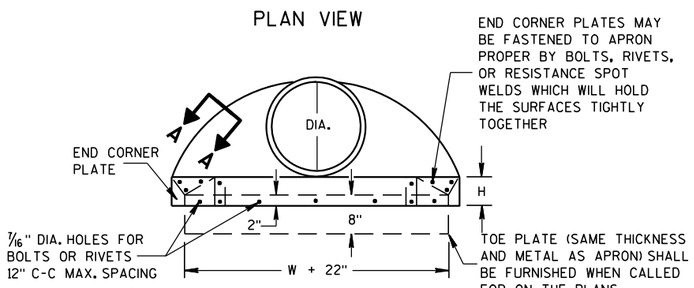

END VIEW

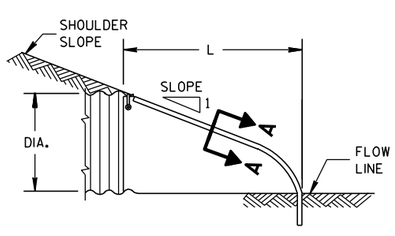

SIDE ELEVATION

METAL ENDWALLS

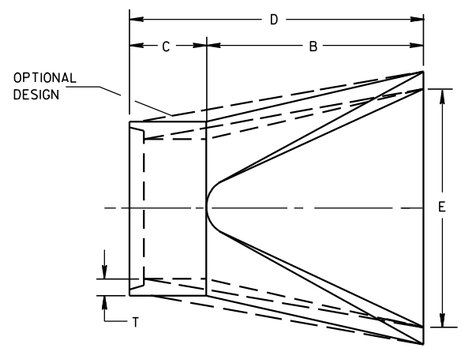

PLAN

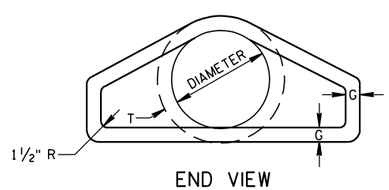

END VIEW

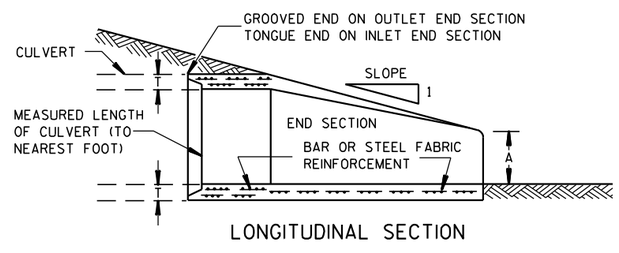

LONGITUDINAL SECTION

CONCRETE ENDWALLS

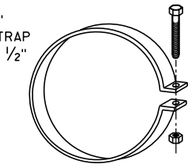

ALTERNATE FOR TYPE 1 CONNECTION

END SECTION CONNECTOR STRAP

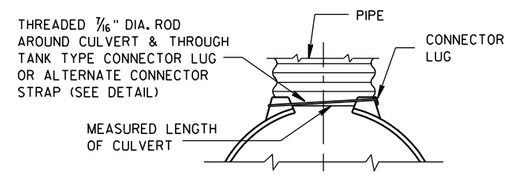

TYPE 1
FOR 12" THRU 24" CORR. PIPE

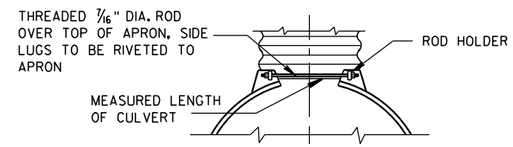

TYPE 2
FOR 30" THRU 96" CORR. PIPE

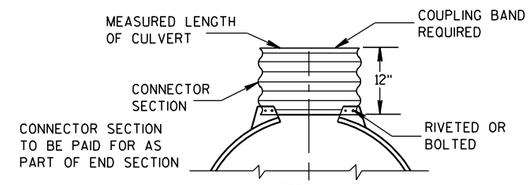

TYPE 3
FOR 42" THRU 96" CORR. PIPE

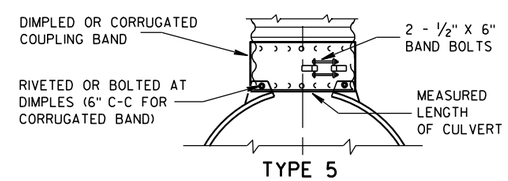

TYPE 5
ALTERNATE FOR:
ALL SIZES CORRUGATED CIRCULAR PIPE

NOTE: DIMPLED BAND FITS OVER OUTSIDE OF ENDWALL, AND CORRUGATED BAND FITS INSIDE ENDWALL. DIMPLED BAND MAY BE USED WITH HELICALLY CORRUGATED PIPE.

FOR CIRCUMFERENTIALLY CORRUGATED PIPE USE ENDWALL CONNECTION DETAILS 1, 2, 3 OR 5 AS APPLICABLE.

FOR HELICALLY CORRUGATED PIPE USE ENDWALL CONNECTION DETAILS 1, 2 OR 5.

FOR HELICALLY CORRUGATED PIPES WITH TWO CIRCUMFERENTIAL CORRUGATIONS AT EACH END USE ENDWALL CONNECTION DETAILS 1, 2 OR 3.

CONNECTION DETAILS

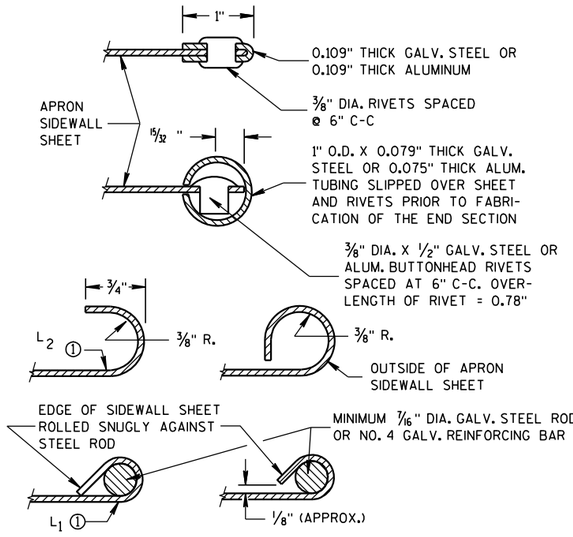

SECTION A-A

GENERAL NOTES

DETAILS OF CONSTRUCTION, MATERIALS AND WORKMANSHIP NOT SHOWN ON THIS DRAWING SHALL CONFORM TO THE PERTINENT REQUIREMENTS OF THE STANDARD SPECIFICATIONS AND THE APPLICABLE SPECIAL PROVISIONS.

CONCRETE CULVERT ENDWALLS MAY NOT BE USED WITH GALVANIZED STEEL OR ALUMINUM CULVERT PIPE OR VISE VERSA. GALVANIZED STEEL OR ALUMINUM ENDWALLS SHALL NORMALLY BE INSTALLED ON CULVERT PIPE OF THE SAME METAL.

ALL THREE PIECE STEEL APRON ENDWALLS FOR 60" DIAMETER PIPE AND LARGER SHALL HAVE 0.109" SIDES AND 0.138" CENTER PANELS. ALL THREE PIECE ALUMINUM APRON ENDWALLS FOR 60" DIAMETER PIPE AND LARGER SHALL HAVE 0.105" SIDES AND 0.134" CENTER PANELS. THE WIDTH OF CENTER PANELS SHALL BE GREATER THAN 20 PERCENT OF THE PIPE PERIMETER.

LAP SEAMS SHALL BE TIGHTLY JOINED BY GALVANIZED RIVETS OR BOLTS FOR STEEL UNITS AND ALUMINUM RIVETS AND BOLTS FOR ALUMINUM UNITS. FOR THE 60" THROUGH 96" DIAMETER APRON ENDWALL SIZES, THE REINFORCED EDGES AND CENTER PANEL SEAMS SHALL BE FURTHER REINFORCED WITH GALVANIZED STEEL OR ALUMINUM STIFFENER ANGLES. THE ANGLES SHALL BE ATTACHED BY GALVANIZED NUTS AND BOLTS FOR STEEL UNITS AND ALUMINUM NUTS AND BOLTS FOR ALUMINUM UNITS.

WHERE TWO OR MORE PIPES WITH APRON ENDWALLS ARE LAID ADJACENT TO EACH OTHER, THEY SHALL BE SEPARATED BY A DISTANCE SUFFICIENT TO PROVIDE A MINIMUM CLEARANCE OF 6 INCHES BETWEEN APRON ENDWALLS.

① FOR PIPE SIZES UP TO 60" DIAMETER, A 180° ROLLED EDGE MAY BE USED INSTEAD OF STEEL ROD REINFORCEMENT. SEE SECTION A-A.

APRON ENDWALLS FOR CULVERT PIPE

STATE OF WISCONSIN
DEPARTMENT OF TRANSPORTATION

APPROVED
11/30/94 — DATE
/S/ Rory L. Rhinesmith — CHIEF ROADWAY DEVELOPMENT ENGINEER
FHWA

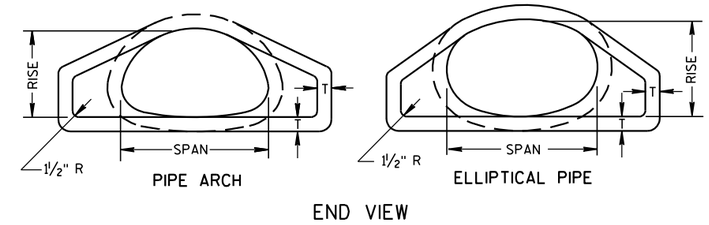

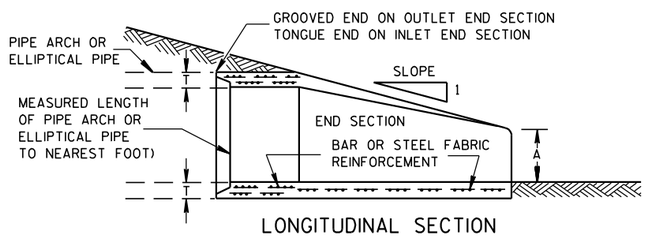

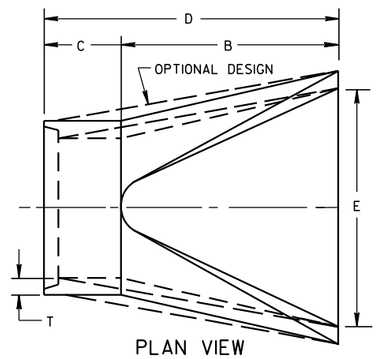

CONCRETE ENDWALLS

2- ⅔" X ½" CORRUGATIONS														
EQUIV. DIA. (Inches)	(Inches)		MIN. THICK. (Inches)		DIMENSIONS (Inches)							APPROX. SLOPE	BODY
	SPAN	RISE	STEEL	ALUM.	A (±1")	B (MAX.)	H (±1")	L (±1½")	L1 ①	L2 ①	W (±2")		
15	17	13	.064	.060	7	9	6	19	14	16	30	2½ to 1	1 Pc.
18	21	15	.064	.060	7	10	6	23	14	19⅜	36	2½ to 1	1 Pc.
21	24	18	.064	.060	8	12	6	28	18	21¾	42	2½ to 1	1 Pc.
24	28	20	.064	.060	9	14	6	32	18	27½	48	2½ to 1	1 Pc.
30	35	24	.079	.075	10	16	6	39	18	37⅝	60	2½ to 1	1 Pc.
36	42	29	.079	.075	12	18	8	46	24	45⅜	75	2½ to 1	1 Pc.
42	49	33	.109	.105	13	21	9	53	24	54¾	85	2½ to 1	2 Pc.
48	57	38	.109	.105	18	26	12	63	24	68	90	2½ to 1	3 Pc.
54	64	43	.109	.105	18	30	12	70	24	72¾	102	2¼ to 1	3 Pc.
60	71	47	.109*	.105*	18	33	12	77	30	82¼	114	2¼ to 1	3 Pc.
66	77	52	.109*	.105*	18	36	12	77	—	—	126	2 to 1	3 Pc.
72	83	57	.109*	.105*	18	39	12	77	—	—	138	2 to 1	3 Pc.

3" X 1" CORRUGATIONS														
EQUIV. DIA. (Inches)	(Inches)		MIN. THICK. (Inches)		DIMENSIONS (Inches)							APPROX. SLOPE	BODY
	SPAN	RISE	STEEL	ALUM.	A (±1")	B (MAX.)	H (±1")	L (±1½")	L1 ①	L2 ①	W (±2")		
48	53	41	.109	.105	18	26	12	63	24	72¾	90	2½ to 1	2 Pc.
54	60	46	.109	.105	18	30	12	70	30	82¼	102	2 to 1	2 Pc.
60	66	51	.109*	.105*	18	33	12	77	—	—	114	1½ to 1	3 Pc.
66	73	55	.109*	.105*	18	36	12	77	—	—	126	1½ to 1	3 Pc.
72	81	59	.109*	.105*	18	39	12	77	—	—	138	2 to 1	3 Pc.
78	87	63	.109*	.105*	22	38	12	77	—	—	148	1½ to 1	3 Pc.
84	95	67	.109*	.105*	22	34	12	77	—	—	162	1½ to 1	3 Pc.
90	103	71	.109*	.105*	22	38	12	77	—	—	174	1½ to 1	3 Pc.
96	112	75	.109*	.105*	24	40	12	77	—	—	174	1½ to 1	3 Pc.

NOTE: ALL SPLICES TO BE LAP RIVETED OR BOLTED.

* EXCEPT CENTER PANEL SEE GENERAL NOTES

REINFORCED CONCRETE PIPE ARCH									
EQUIV. DIA. (Inches)	DIMENSIONS (Inches)								APPROX. SLOPE
	** SPAN	** RISE	T	A	B	C	D	E	
24	29	18	3	8½	39	33	72	48	3 to 1
30	36	22	3½	9½	50	46	96	60	3 to 1
36	44	27	4	11⅛	60	36	96	72	3 to 1
42	51	31	4½	15 13/16	60	36	96	78	3 to 1
48	58	36	5	21	60	36	96	84	3 to 1
54	65	40	5½	25½	60	36	96	90	3 to 1
60	73	45	6	31	60	36	96	96	3 to 1
72	88	54	7	31	60	39	99	120	2 to 1
84	102	62	8	28½	83	19	102	144	2 to 1

REINFORCED CONCRETE ELLIPTICAL PIPE									
EQUIV. DIA. (Inches)	DIMENSIONS (Inches)								APPROX. SLOPE
	** SPAN	** RISE	T	A	B	C	D	E	
24	30	19	3¼	8½	39	33	72	48	3 to 1
30	38	24	3¾	9½	54	18	72	60	3 to 1
36	45	29	4½	11⅛	60	24	84	72	2½ to 1
42	53	34	5	15¾	60	36	96	78	2½ to 1
48	60	38	5½	21	60	36	96	84	2½ to 1
54	68	43	6	25½	60	36	96	90	2½ to 1
60	76	48	6½	30	60	36	96	96	2½ to 1

**NOMINAL SIZE

GENERAL NOTES

DETAILS OF CONSTRUCTION, MATERIALS AND WORKMANSHIP NOT SHOWN ON THIS DRAWING SHALL CONFORM TO THE PERTINENT REQUIREMENTS OF THE STANDARD SPECIFICATIONS AND THE APPLICABLE SPECIAL PROVISIONS.

CONCRETE APRON ENDWALLS MAY NOT BE USED WITH GALVANIZED STEEL OR ALUMINUM CULVERT PIPE OR VISE VERSA. GALVANIZED STEEL OR ALUMINUM APRON ENDWALLS SHALL NORMALLY BE INSTALLED ON CULVERT PIPE OF THE SAME METAL.

ALL THREE PIECE STEEL APRON ENDWALLS FOR 66" X 51" PIPE ARCH AND LARGER SHALL HAVE 0.109" SIDES AND 0.138" CENTER PANELS. ALL THREE PIECE ALUMINUM APRON ENDWALLS FOR 66" X 51" PIPE ARCH AND LARGER SHALL HAVE 0.105" SIDES AND 0.134" CENTER PANELS. THE WIDTH OF CENTER PANELS SHALL BE GREATER THAN 20 PERCENT OF THE PIPE ARCH PERIMETER.

LAP SEAMS SHALL BE TIGHTLY JOINED BY GALVANIZED RIVETS OR BOLTS FOR STEEL UNITS AND ALUMINUM RIVETS AND BOLTS FOR ALUMINUM UNITS. FOR THE 77" X 52" THROUGH 112" X 75" APRON ENDWALL SIZES, THE REINFORCED EDGES AND CENTER PANEL SEAMS SHALL BE FURTHER REINFORCED WITH GALVANIZED STEEL OR ALUMINUM STIFFENER ANGLES. THE ANGLES SHALL BE ATTACHED BY GALVANIZED NUTS AND BOLTS FOR STEEL UNITS AND ALUMINUM NUTS AND BOLTS FOR ALUMINUM UNITS.

WHERE TWO OR MORE PIPES WITH APRON ENDWALLS ARE LAID ADJACENT TO EACH OTHER, THEY SHALL BE SEPARATED BY A DISTANCE SUFFICIENT TO PROVIDE A MINIMUM CLEARANCE OF 6 INCHES BETWEEN APRON ENDWALLS.

① FOR PIPE ARCH SIZES UP TO 73" X 55" A 180° ROLLED EDGE MAY BE USED INSTEAD OF STEEL ROD REINFORCEMENT. SEE SECTION A-A.

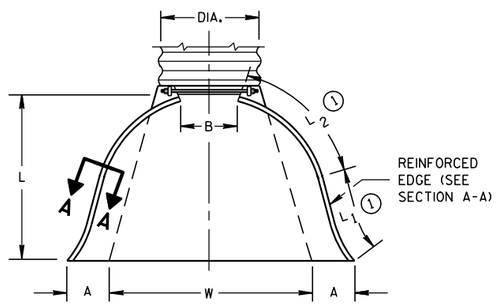

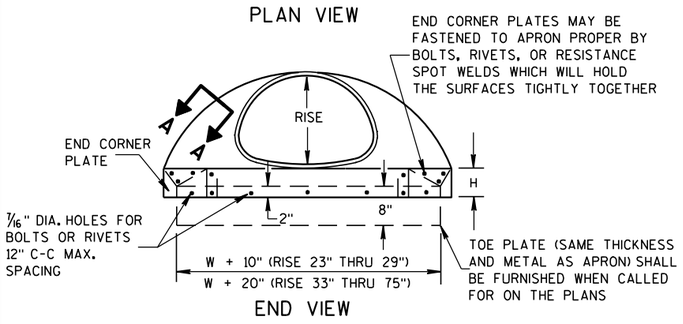

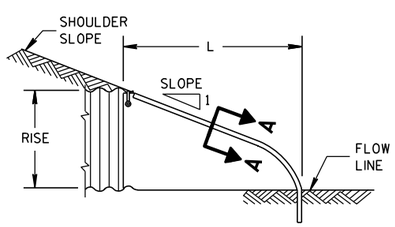

METAL ENDWALLS

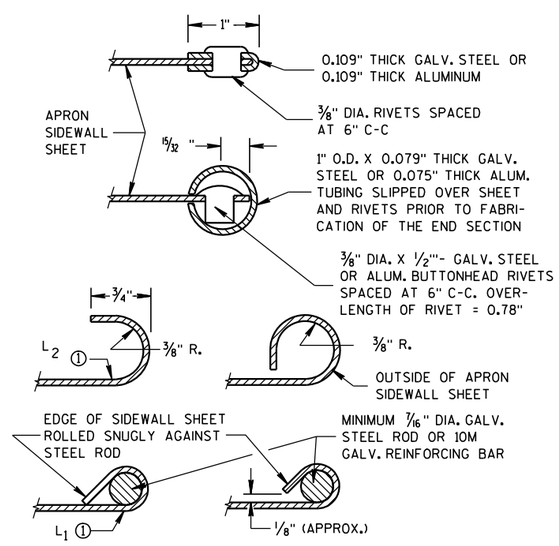

SECTION A-A

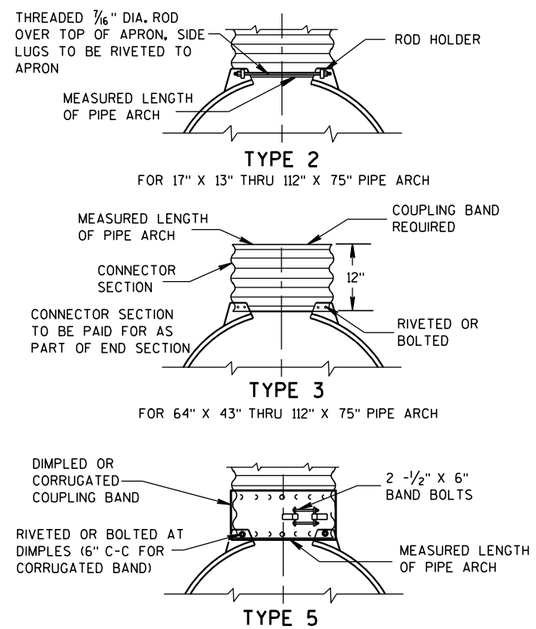

NOTE: DIMPLED BAND FITS OVER OUTSIDE OF ENDWALL, AND CORRUGATED BAND FITS INSIDE ENDWALL.

CONNECTION DETAILS

APRON ENDWALLS FOR PIPE ARCH AND ELLIPTICAL PIPE

STATE OF WISCONSIN
DEPARTMENT OF TRANSPORTATION

APPROVED

11/30/94 — DATE

/S/ Rory L. Rhinesmith — CHIEF ROADWAY DEVELOPMENT ENGINEER

FHWA

6

S.D.D. 8 F 2-1

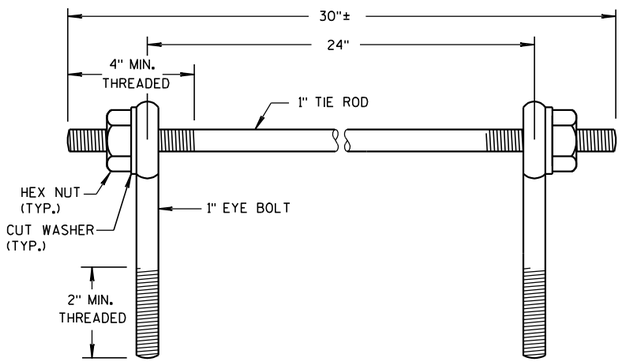

EYE BOLTS AND TIE ROD

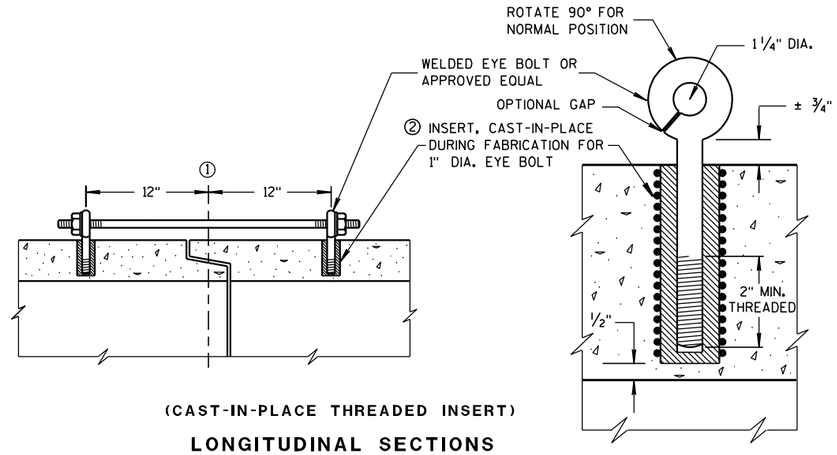

(CAST-IN-PLACE THREADED INSERT)

LONGITUDINAL SECTIONS

EYE BOLT AND TIE ROD ASSEMBLY (ALTERNATE NO. 1)

GENERAL NOTES

DETAILS OF CONSTRUCTION, MATERIALS, AND WORKMANSHIP NOT SHOWN ON THIS DRAWING SHALL CONFORM TO THE PERTINENT REQUIREMENTS OF THE STANDARD SPECIFICATIONS AND APPLICABLE SPECIAL PROVISIONS.

CONCRETE CULVERT AND STORM SEWER PIPE SHALL BE TIED TOGETHER IN THE MANNER ILLUSTRATED BY THIS DETAIL AT LOCATIONS DESIGNATED IN THE STANDARD SPECIFICATIONS AND THE PLAN. THE CONTRACTOR MAY USE EITHER ALTERNATE 1, 2 OR 3 FOR DRAINAGE STRUCTURES. ONLY ALTERNATE 1 AND 3 MAY BE USED FOR CATTLE PASSES, UNLESS OTHERWISE STATED IN THE CONTRACT. THE MATERIALS, FABRICATION AND WORK NECESSARY TO TIE THE PIPE BY THIS DETAIL WILL BE CONSIDERED INCIDENTAL TO THE PIPE AND APRON ENDWALLS IF REQUIRED.

DETAILED DRAWINGS FOR PROPOSED ALTERNATE DESIGNS FOR JOINT TIES SHALL BE SUBMITTED TO THE ENGINEER FOR APPROVAL.

JOINT TIES TO BE HOT-DIP GALVANIZED PER ASTM A 153.

① ℄ OF TONGUE AND GROOVE OR BELL AND SPIGOT JOINTS.

② THE INSIDE OF THE THREADED INSERTS SHALL BE CLEAN TO ALLOW THE INSERTION OF THREADED EYE BOLTS.

③ HOLES SHALL BE CAST-IN-PLACE OR DRILLED 12 INCHES FROM ℄ OF TONGUE AND GROOVE.

④ BOLT PROJECTION INSIDE OF PIPE SHALL NOT EXCEED 2 INCHES.

⑤ OPENING TO BE ROD DIAMETER PLUS 1 INCH.

⑥ LENGTH ADEQUATE TO EXTEND TO WITHIN 1/2 INCH OF THE INNER SURFACE OF THE PIPE.

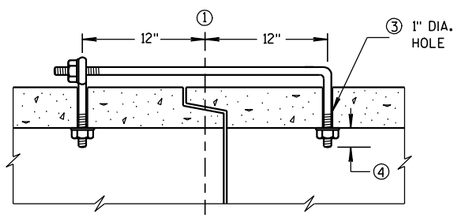

(TONGUE & GROOVE PIPE)

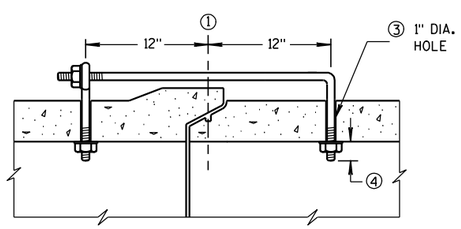

(MODIFIED BELL PIPE)

LONGITUDINAL SECTION

EYE BOLT DIMENSION TABLE

PIPE SIZE	L = LENGTH	
	TONGUE & GROOVE PIPE	MODIFIED BELL PIPE
18" TO 24"	4 1/2"	6 1/4"
30"	5"	7"
36"	5 1/2"	7"
42"	6"	
48"	6 1/2"	
60"	7 1/2"	
66"	8"	

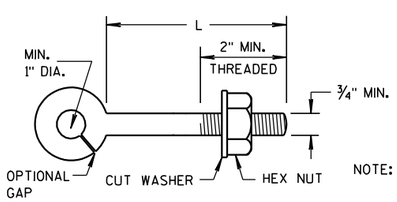

EYE BOLT

NOTE:

NOTE: TWO EYE BOLTS MAY BE USED WITH A 30" LONG THREADED ROD IN LIEU OF THE 90° BENT TIE ROD.

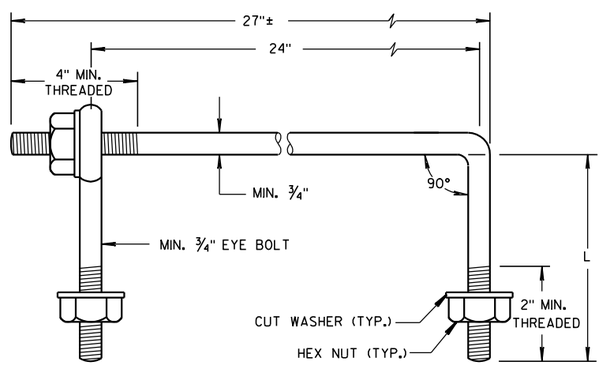

EYE BOLT AND TIE ROD

(JOINT TIES FOR 18" TO 66" DIA. CONCRETE PIPE)

EYE BOLT AND TIE ROD ASSEMBLY (ALTERNATE NO. 2)

ADJUSTABLE TIE ROD TABLE

PIPE DIAMETER	TIE ROD DIAMETER	D	L_1	N
12-60	5/8	5/8	5	1/2
66-84	3/4	3/4	5	1/2
90-108	1	1	7	1 7/16

DIMENSIONS SHOWN ARE IN INCHES

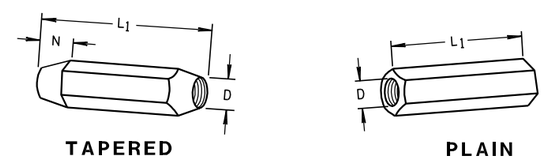

TAPERED PLAIN

RIGHT AND LEFT THREADS

SLEEVE NUTS

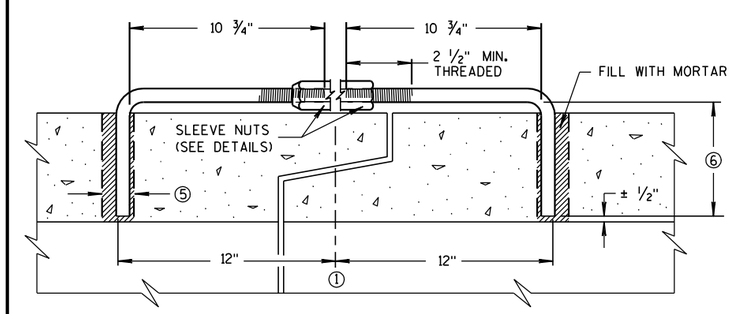

LONGITUDINAL SECTION

(JOINT TIES FOR 12" TO 108" DIA. CONCRETE PIPE)

ADJUSTABLE TIE ROD (ALTERNATE NO. 3)

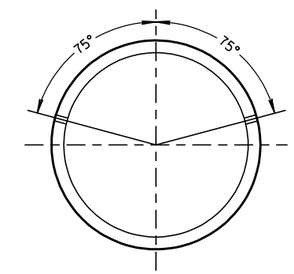

PLACEMENT OF (2) CAST-IN-PLACE INSERTS OR HOLES DURING FABRICATION FOR PIPE SECTIONS REQUIRING TIE RODS

TRANSVERSE SECTION

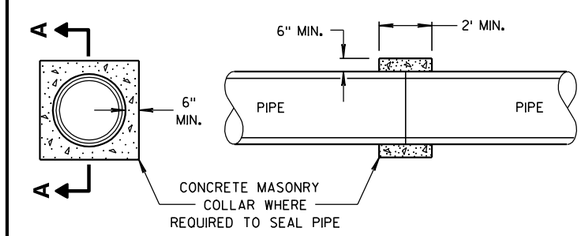

SECTION A-A

CONCRETE COLLAR DETAIL

JOINT TIES FOR CONCRETE PIPE AND CONCRETE COLLAR DETAIL

STATE OF WISCONSIN
DEPARTMENT OF TRANSPORTATION

APPROVED
6/5/2012 /S/ Jerry H. Zogg
DATE ROADWAY STANDARDS DEVELOPMENT ENGINEER
FHWA

6

S.D.D. 8 F 4-7

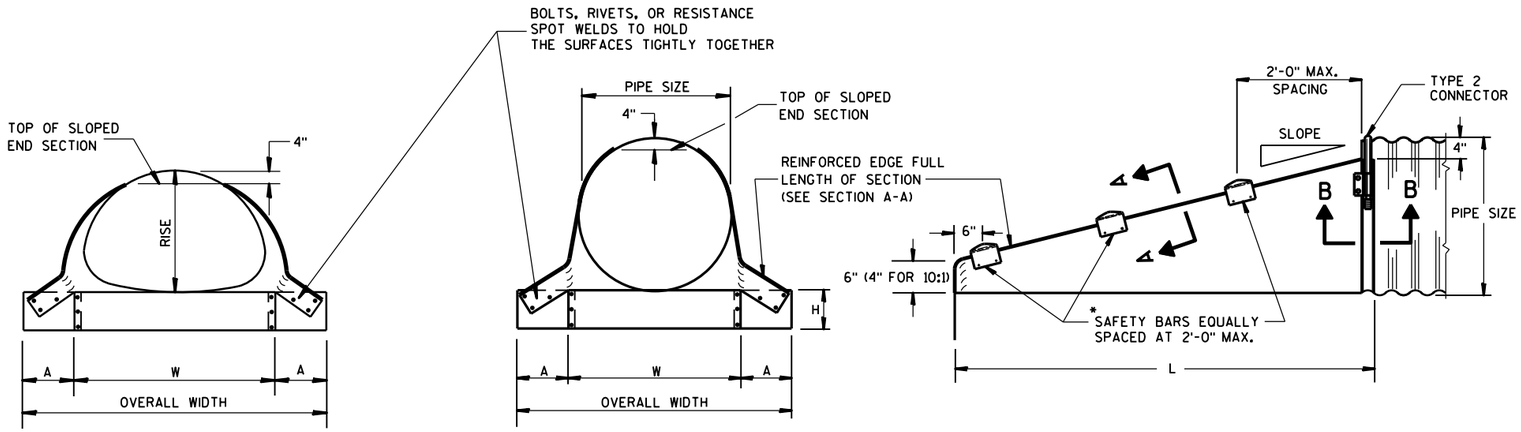

FRONT VIEW

FRONT VIEW

SIDE VIEW

GENERAL NOTES

DETAILS OF CONSTRUCTION, MATERIALS AND WORKMANSHIP NOT SHOWN ON THIS DRAWING SHALL CONFORM TO THE PERTINENT REQUIREMENTS OF THE STANDARD SPECIFICATIONS AND THE APPLICABLE SPECIAL PROVISIONS.

SLOPED END SECTIONS SHALL CONFORM TO THE REQUIREMENTS OF THE STANDARD SPECIFICATIONS, SECTION 521 FOR STEEL APRON ENDWALLS.

SAFETY BARS SHALL BE FABRICATED FROM GALVANIZED STEEL PIPE MEETING THE REQUIREMENTS OF ASTM A-53, GRADE B, SCHEDULE 40 OR APPROVED EQUAL.

STEEL APRON ENDWALLS FOR CULVERT PIPE SLOPED SIDE DRAINS

PIPE DIA. (IN.)	MIN. THICK. (Inches)	DIMENSIONS (Inches)				L DIMENSIONS					
		A	H	W	OVERALL WIDTH	SLOPE	LENGTH INCHES	SLOPE	LENGTH INCHES	SLOPE	LENGTH INCHES
15	.064	8	6	21	37	4:1	20	6:1	30	10:1	70
18	.064	8	6	24	40	4:1	32	6:1	48	10:1	100
21	.064	8	6	27	43	4:1	44	6:1	66	10:1	130
24	.064	8	6	30	46	4:1	56	6:1	84	10:1	160
30	.109	12	9	36	60	4:1	80	6:1	120	10:1	220
36	.109	12	9	42	66	4:1	104	6:1	156	10:1	280
42	.109	16	12	48	80	4:1	128	6:1	192	——	——
48	.109	16	12	54	86	4:1	152	6:1	228	——	——
54	.109	16	12	60	92	4:1	176	6:1	264	——	——
60	.109	16	12	66	98	4:1	200	6:1	300	——	——

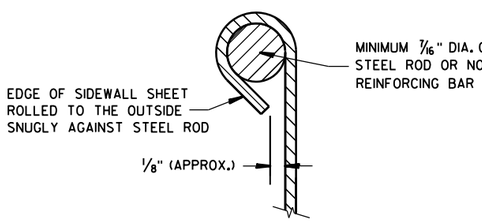

SECTION A-A

*NOTE:
THREE SAFETY BARS ARE SHOWN. ACTUAL NUMBER OF BARS REQUIRED AT A 2'-0" C-C MAX. SPACING WILL VARY DEPENDING ON THE LENGTH OF THE END SECTION.

3" GALVANIZED PIPE. FLATTEN ENDS, THEN BEND OUTSIDE 4" TO MATCH END SECTION SIDES.

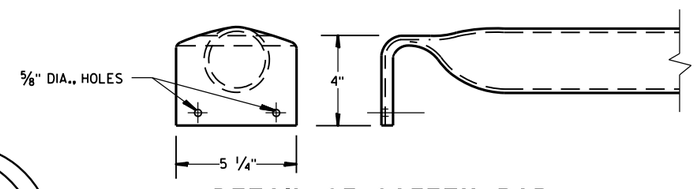

DETAIL OF SAFETY BAR

STEEL APRON ENDWALLS FOR PIPE ARCH SLOPED SIDE DRAINS

EQUIV. DIA. (Inches)	(Inches)		MIN. THICK. (Inches) ①	DIMENSIONS (Inches)				L DIMENSIONS					
	SPAN	RISE		A	H	W	OVERALL WIDTH	SLOPE	LENGTH INCHES	SLOPE	LENGTH INCHES	SLOPE	LENGTH INCHES
15	17	13	.064 *	7	6	30	44	4:1	19	6:1	30	10:1 ②	70
18	21	15	.064 *	8	6	27	43	4:1	20	6:1	30	10:1	70
21	24	18	.064 *	8	6	30	46	4:1	32	6:1	48	10:1	100
24	28	20	.064 *	8	6	34	50	4:1	40	6:1	60	10:1	120
30	35	24	.079 *	12	9	41	65	4:1	56	6:1	84	10:1	160
36	42	29	.109 *	12	9	48	72	4:1	76	6:1	114	10:1	210
42	49	33	.109	16	12	55	87	4:1	92	6:1	138	——	——
48	57	38	.109	16	12	63	95	4:1	112	6:1	168	——	——
54	64	43	.109	16	12	70	102	4:1	132	6:1	198	——	——

① * MINIMUM THICKNESS OF ALL 10:1 SLOPED SIDE DRAINS IS 0.109".
② ACTUAL SLOPE GREATER THAN 10:1.

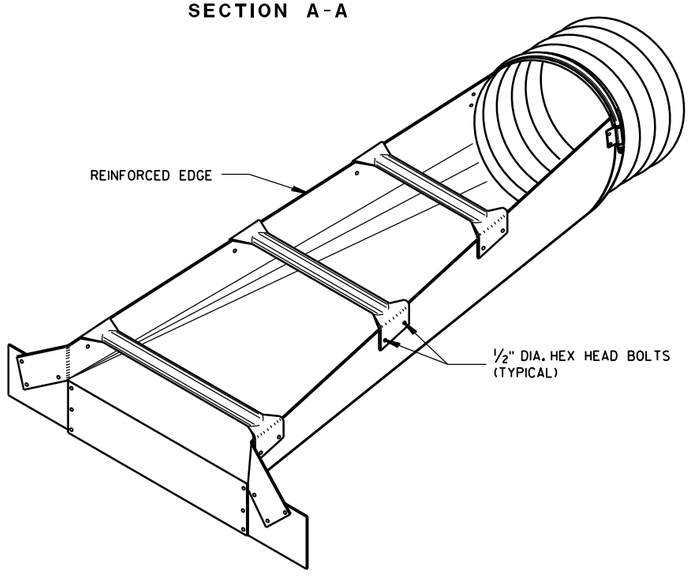

ISOMETRIC VIEW

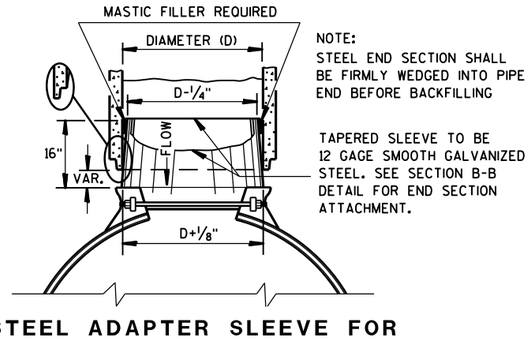

NOTE:
STEEL END SECTION SHALL BE FIRMLY WEDGED INTO PIPE END BEFORE BACKFILLING

TAPERED SLEEVE TO BE 12 GAGE SMOOTH GALVANIZED STEEL. SEE SECTION B-B DETAIL FOR END SECTION ATTACHMENT.

STEEL ADAPTER SLEEVE FOR CONCRETE PIPE

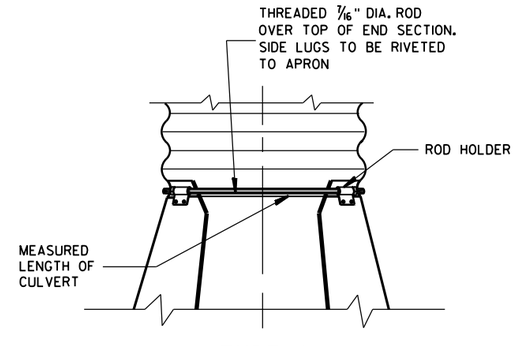

TYPE 2 CONNECTION DETAIL

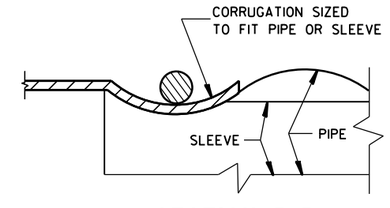

SECTION B-B

STEEL APRON ENDWALLS FOR CULVERT PIPE AND PIPE ARCH SLOPED SIDE DRAINS

STATE OF WISCONSIN
DEPARTMENT OF TRANSPORTATION

APPROVED
9/14/2012 — DATE
/S/ Jerry H. Zogg — ROADWAY STANDARDS DEVELOPMENT ENGINEER
FHWA

6

6

S.D.D. 8 F 7-5

S.D.D. 8 F 7-5

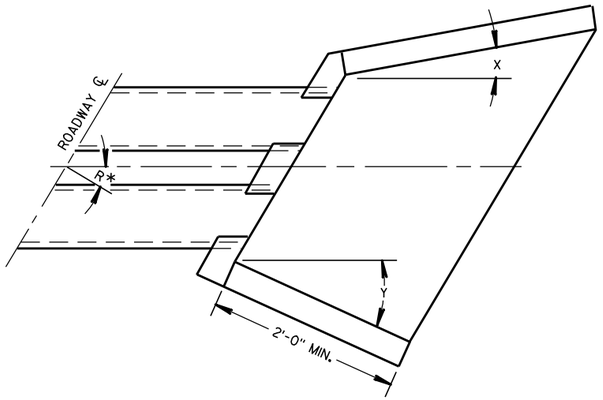

WINGWALL ANGLE DETAILS

INLET			OUTLET		
R*	X	Y	R*	X	Y
0 - 7°	30°	30°	0 - 15°	15°	15°
8 - 22°	25°	"	16 - 45°	10°	"
23 - 37°	20°	"	46 - 75°	5°	"
38 - 52°	15°	"	OVER 75°	0°	"
53 - 67°	10°	"			
68 - 82°	5°	"			
OVER 82°	0°	"			

*R = NUMBER OF DEGREES RIGHT OR LEFT HAND FORWARD

GENERAL NOTES

DETAILS OF CONSTRUCTION, MATERIALS AND WORKMANSHIP NOT SHOWN ON THIS DRAWING SHALL CONFORM TO THE PERTINENT REQUIREMENTS OF THE STANDARD SPECIFICATIONS AND THE APPLICABLE SPECIAL PROVISIONS.

FILL SLOPES FLATTER THAN 2 ½:1 SHALL BE WARPED TO MEET THE TOP OF THE WINGWALLS.

ALL STEEL REINFORCEMENT AND WELDED STEEL WIRE FABRIC SHALL BE EMBEDDED 2 INCHES CLEAR UNLESS OTHERWISE NOTED.

(1) MINIMUM REINFORCEMENT SHALL BE 6" X 6" - W4.0 X W4.0 OR NO. 3 BARS SPACED 12" C-C IN BOTH DIRECTIONS.

(2) THE SPACE BETWEEN PIPES SHALL BE AS FOLLOWS:

DIAMETER OR SPAN	SPACE
UP TO AND INCLUDING 48"	2'-0"
OVER 48" TO 72"	½ DIA. OR SPAN
OVER 72"	3'-0"

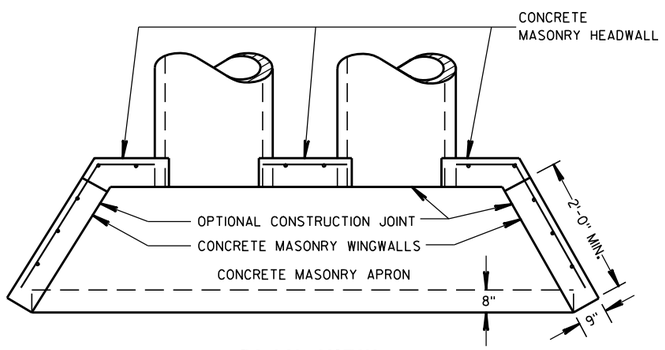

PLAN VIEW

CULVERT PIPE AND PIPE ARCH

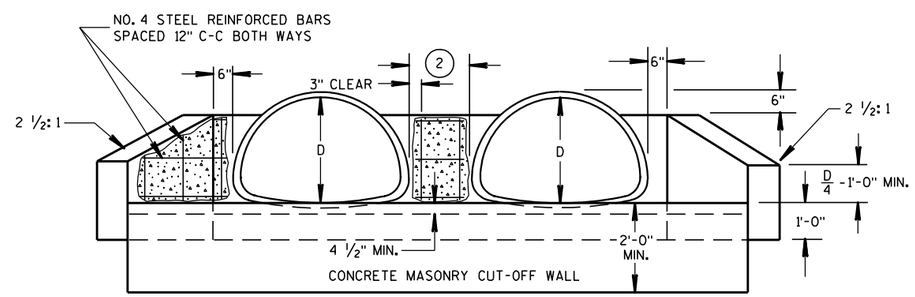

END ELEVATION

PIPE ARCH

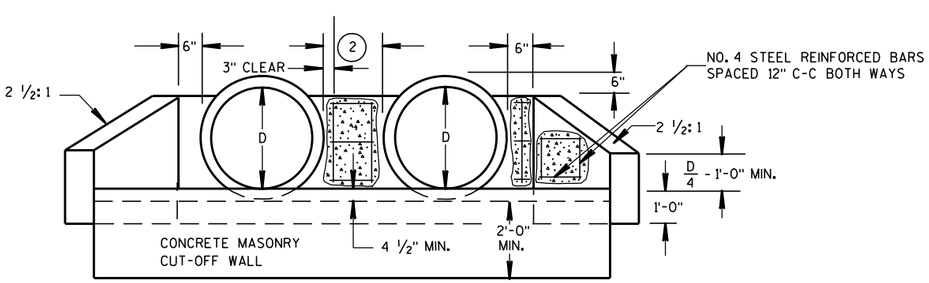

END ELEVATION

CULVERT PIPE

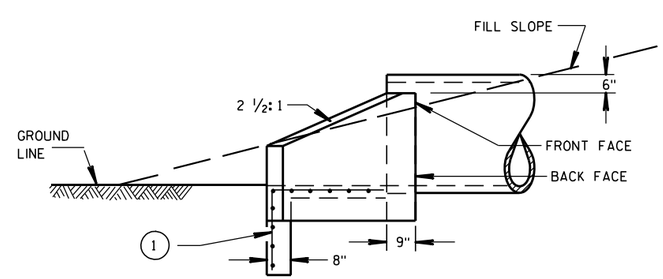

SIDE ELEVATION

CULVERT PIPE AND PIPE ARCH

CONCRETE MASONRY ENDWALLS FOR CULVERT PIPE AND PIPE ARCH

STATE OF WISCONSIN
DEPARTMENT OF TRANSPORTATION

APPROVED
9/14/98 — DATE
/S/ Rory L. Rhinesmith — CHIEF ROADWAY DEVELOPMENT ENGINEER
FHWA

6

6

S.D.D. 8 F 10-1

S.D.D. 8 F 10-1

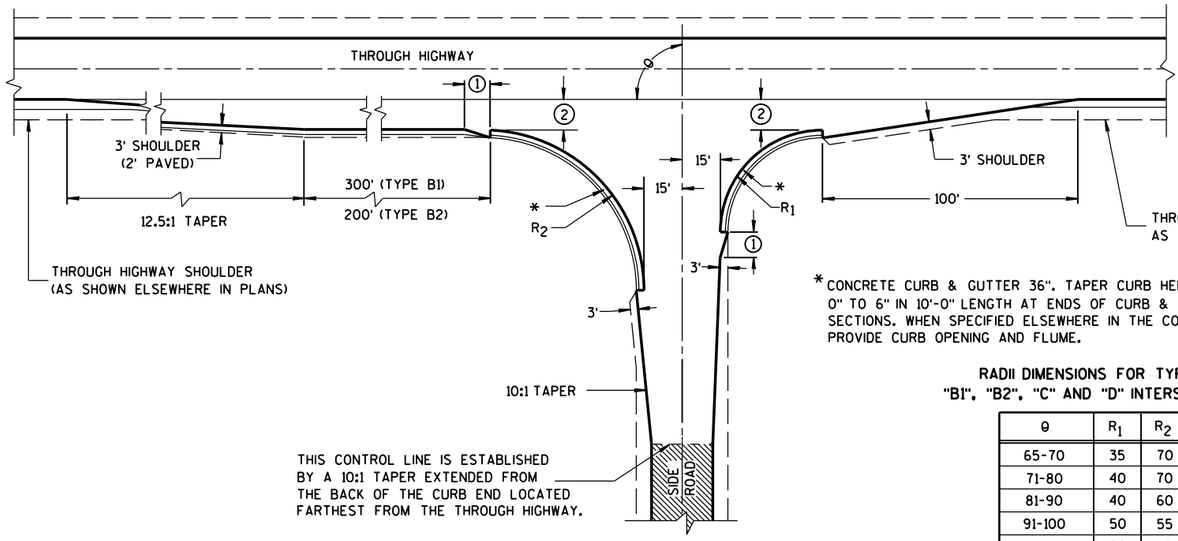

TYPE "B1" AND "B2"

*CONCRETE CURB & GUTTER 36". TAPER CURB HEIGHT 0" TO 6" IN 10'-0" LENGTH AT ENDS OF CURB & GUTTER SECTIONS. WHEN SPECIFIED ELSEWHERE IN THE CONTRACT, PROVIDE CURB OPENING AND FLUME.

RADII DIMENSIONS FOR TYPES "B1", "B2", "C" AND "D" INTERSECTIONS

θ	R_1	R_2
65-70	35	70
71-80	40	70
81-90	40	60
91-100	50	55
101-110	60	45

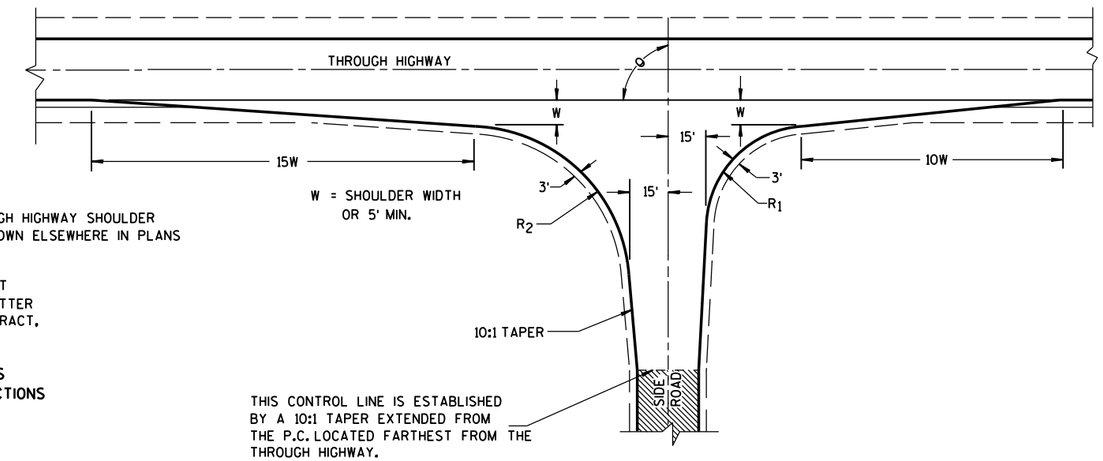

TYPE "C"

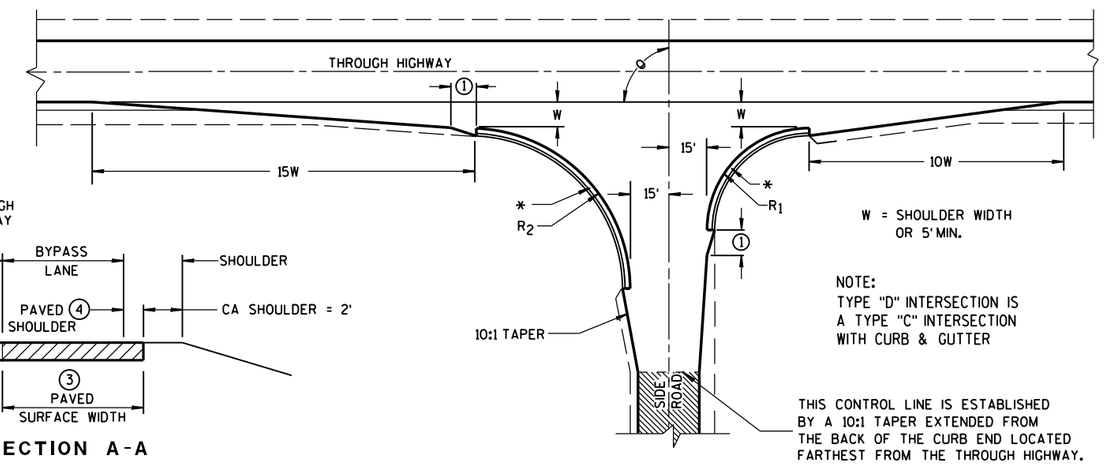

TYPE "D"

GENERAL NOTES

DESIGNS MAY BE USED INTERCHANGEABLY IN COMBINATION OR SEPARATELY FOR ANY ONE COMPLETE INTERSECTION DEPENDING UPON INTERSECTION ANGLE AND SURFACING OF EACH APPROACH ROADWAY.

SIDE ROAD SURFACING NOTE

WHEN THE SIDE ROAD IS NOT PRESENTLY PAVED, PAVEMENT SHALL BE PLACED TO THE LIMITS SHOWN UNLESS OTHERWISE PROVIDED IN THE CONTRACT. WHERE THE CONSTRUCTION LIMITS ARE BEYOND THE PAVING LIMITS, CRUSHED AGGREGATE SURFACING SHALL BE PLACED BETWEEN THE PAVING LIMITS AND CONSTRUCTION LIMITS.

WHEN THE SIDE ROAD IS PRESENTLY PAVED, NEW PAVEMENT SHALL BE PLACED TO THE LIMITS OF DESIGN AS SHOWN AND BEYOND, IF NECESSARY, TO MEET EXISTING PAVEMENT.

WHEN THE SIDE ROAD IS THE CONSTRUCTION PROJECT, THE INTERSECTION SURFACING SHALL BE THE SAME AS FOR THE PROJECT.

EXISTING PAVED SURFACE

BYPASS LANE

(1) 10-FT TYPICAL.

(2) 12-FT** PLUS ADDITIONAL WIDTH FOR BIKE LANE IF SHOWN ELSEWHERE IN THE PLAN.

**10-FT MAY BE USED ON TYPE B2 ON RESURFACING PROJECTS IF SPECIFIED IN THE CONTRACT.

(3) BYPASS LANE PAVED SURFACE WIDTH OUTSIDE OF TRAVEL LANE
-ASPHALT = 12-FT PLUS PAVED SHOULDER WIDTH.
-PC CPNCRETE = 13-FT PLUS PAVED SHOULDER WIDTH.

(4) BYPASS LANE PAVED SHOULDER WIDTH = THE GREATER OF 1-FT OR THE PAVED SHOULDER WIDTH OF THE THROUGH HIGHWAY.

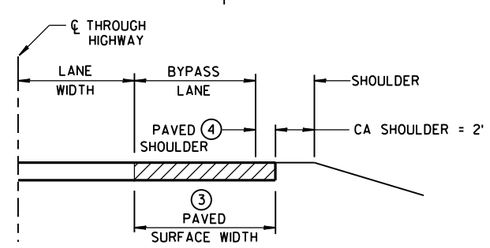

SECTION A-A
(SHOWING BYPASS LANE AND SHOULDER)

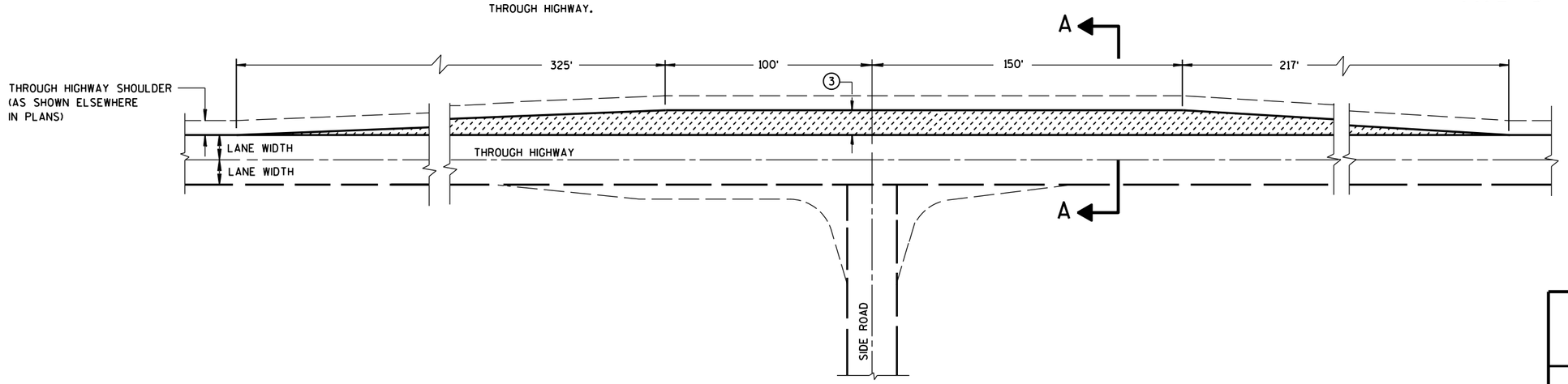

TEE INTERSECTION BYPASS LANE DETAIL

AT-GRADE SIDE ROAD INTERSECTION, TYPES "B1", "B2", "C" AND "D" AND TEE INTERSECTION BYPASS LANE

STATE OF WISCONSIN
DEPARTMENT OF TRANSPO

6

S.D.D. 9 A 1-13a

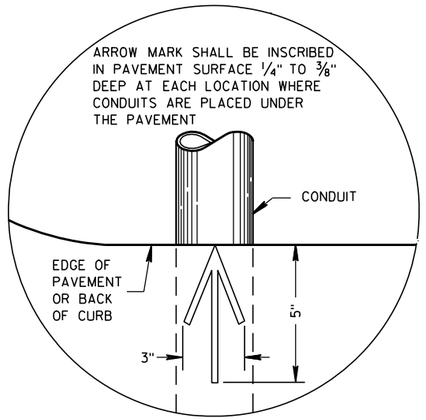

PLAN VIEW

ARROW MARK

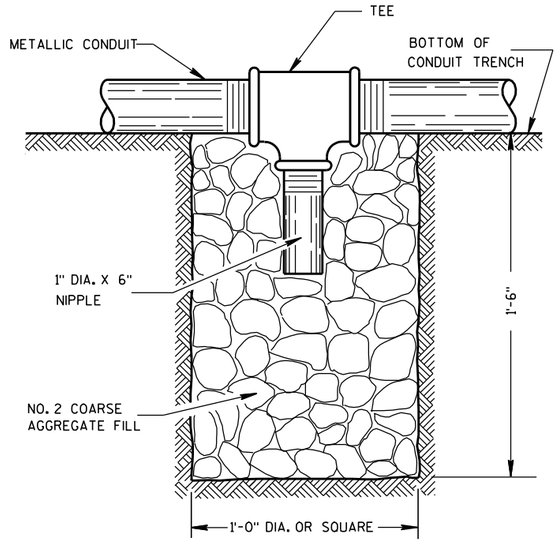

NOTE: INSTALL AT LOCATIONS WHERE METALLIC CONDUITS CANNOT BE PITCHED TO DRAIN INTO A PULL BOX.

DRAIN SUMP FOR METALLIC CONDUIT

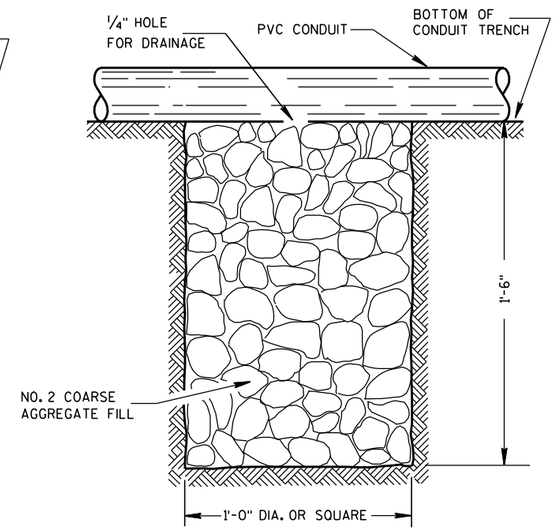

NOTE: INSTALL AT LOCATIONS WHERE PVC CONDUITS CANNOT BE PITCHED TO DRAIN INTO A PULL BOX.

DRAIN SUMP FOR PVC CONDUIT

GENERAL NOTES

DETAILS OF CONSTRUCTION, MATERIALS AND WORKMANSHIP NOT SHOWN ON THIS DRAWING SHALL CONFORM TO THE PERTINENT REQUIREMENTS OF THE CONTRACT.

METALLIC (STANDARD SPECIFICATION 652.2.2) OR NONMETALLIC (STANDARD SPECIFICATION 652.2.3) CONDUIT SHALL BE FURNISHED AND PLACED AS SHOWN.

DEPTH OF CONDUIT INSTALLED BELOW THE TRAVELED WAY SHALL BE 24 INCHES MINIMUM AND 36 INCHES MAXIMUM.

DEPTH OF CONDUIT INSTALLED THAT IS NOT BELOW THE TRAVELED WAY SHALL BE 18 INCHES MINIMUM AND 36 INCHES MAXIMUM.

ANY EXCEPTION TO THE MAXIMUM DEPTH SHALL BE ONLY WITH THE WRITTEN APPROVAL OF THE ENGINEER.

THE TRENCH SHALL NOT BE BACKFILLED PRIOR TO INSPECTION OF THE CONDUIT.

ALL METALLIC CONDUIT RACEWAY ENDS SHALL BE REAMED AND THREADED.

ALL METALLIC CONDUIT IN WHICH WIRE OR CABLE IS TO BE INSTALLED SHALL BE BUSHED WITH APPROVED THREADED BUSHINGS BEFORE INSTALLATION OF THE WIRE OR CABLE.

ALL METALLIC CONDUITS IN WHICH WIRE OR CABLE IS NOT TO BE INSTALLED SHALL BE CAPPED WITH THREADED PROTECTIVE CAPS, AS APPROVED BY THE ENGINEER.

ALL NONMETALLIC CONDUIT SHALL BE CAPPED OR PLUGGED IMMEDIATELY AFTER INSTALLATION AND SHALL REMAIN CAPPED OR PLUGGED UNTIL WIRE/CABLES ARE INSTALLED.

NONMETALLIC CONDUITS IN WHICH WIRE OR CABLE IS NOT BEING INSTALLED SHALL REMAIN CAPPED OR PLUGGED.

BENDING OF PVC ELECTRICAL CONDUIT SHALL BE ACCOMPLISHED BY USING A BLANKET OR EMERSION TYPE TANK DESIGNED FOR THE PURPOSE OF BENDING PVC ELECTRICAL CONDUIT.

ALL CUT ENDS SHALL BE TRIMMED INSIDE AND OUTSIDE TO REMOVE ALL ROUGH EDGES ON NONMETALLIC CONDUIT. (SEE NEC 347.5)

WHEN REQUIRED TO CONNECT NONMETALLIC CONDUIT TO METALLIC CONDUIT, ONLY U.L. LISTED ADAPTER FITTINGS SHALL BE USED.

PRIOR TO CONDUIT ACCEPTANCE, CONDUIT CAPS OR PLUGS SHALL BE REMOVED, AND THE CAPS, PLUGS AND CONDUIT ENDS SHALL BE THOROUGHLY CLEANED AND THEN THE CAPS OR PLUGS REINSTALLED TO ENSURE THAT THE CAPS OR PLUGS CAN BE EASILY REMOVED IN THE FUTURE.

ALL CONDUIT BEING FURNISHED AND INSTALLED SHALL HAVE THE U.L. LABEL FIRMLY ATTACHED.

CONDUIT RUNS SHALL BE THE SAME SIZE OF CONDUIT FROM ONE END TO THE OTHER (FROM PULL BOX TO PULL BOX-OR-JUNCTION BOX TO JUNCTION BOX-OR-BASE TO BASE, ETC.).

POLY ROPE OR A PULL WIRE SHALL BE INSTALLED AS STATED IN THE STANDARD SPECIFICATION, ITEM 652.3.1.1.

ALL CONDUIT RUNS SHALL BE STRAIGHT (WITHOUT BENDS) FROM PULL BOX TO PULL BOX, PULL BOX TO BASE AND BASE TO BASE AS SHOWN ON THE PLANS.

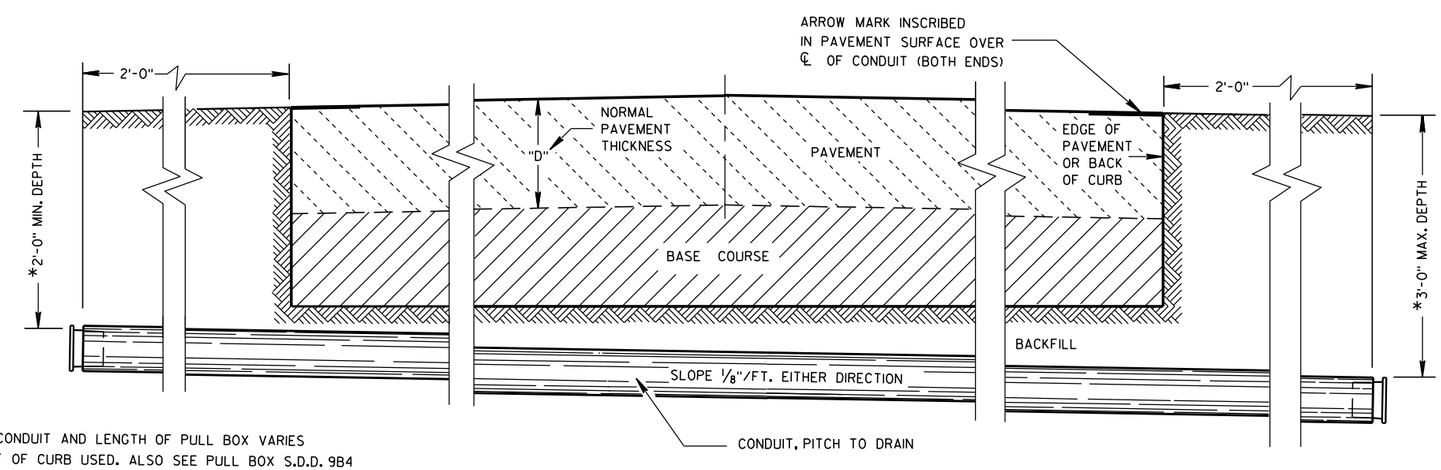

*DEPTH OF CONDUIT AND LENGTH OF PULL BOX VARIES WITH HEIGHT OF CURB USED. ALSO SEE PULL BOX S.D.D. 9B4

SIDE ELEVATION

DETAIL FOR CONDUIT UNDER PAVED HIGHWAYS

CONDUIT

STATE OF WISCONSIN
DEPARTMENT OF TRANSPORTATION

APPROVED

10/23/03 — DATE

/S/ Balu Ananthanarayanan — STATE ELECTRICAL ENGI

FHWA — HWYS

TABLE OF NOMINAL DIMENSIONS AND WEIGHTS

DIMENSION IN INCHES		CORRUGATED STEEL PIPE								
PIPE DIAMETER (INSIDE)	A	12	12	12	18	18	18	24	24	24
PIPE LENGTH **	B	24	30	36	24	30	36	36	42	48
WALL THICKNESS	C	0.064	0.064	0.064	0.064	0.064	0.064	0.064	0.064	0.064
COVER	D	10 1/4	10 1/4	10 1/4	16 1/4	16 1/4	16 1/4	22 1/4	22 1/4	22 1/4
FRAME	E	14 1/2	14 1/2	14 1/2	20 1/2	20 1/2	20 1/2	26 1/2	26 1/2	26 1/2
FRAME	F	8 1/2	8 1/2	8 1/2	14 1/2	14 1/2	14 1/2	20 1/2	20 1/2	20 1/2
FRAME	G	11 1/2	11 1/2	11 1/2	17 1/2	17 1/2	17 1/2	23 1/2	23 1/2	23 1/2
WEIGHT IN POUNDS *										
FRAME AND COVER		60	60	60	110	110	110	155	155	155

* THE ACTUAL WEIGHT OF THE MANHOLE FRAME AND COVER MAY VARY WITHIN 5 PERCENT PLUS OR MINUS OF THE WEIGHTS SHOWN.

** NORMALLY USED LENGTHS. THE PROJECT ENGINEER SHALL DETERMINE IF PIPE LENGTHS, OTHER THAN THOSE SPECIFIED, SHALL BE USED, TO A MAXIMUM OF 48" (CONTINUOUS LENGTH, NON-SPLICED). THE ADDITIONAL LENGTH SHALL BE INCIDENTAL TO THE PULL BOX BID PRICE.

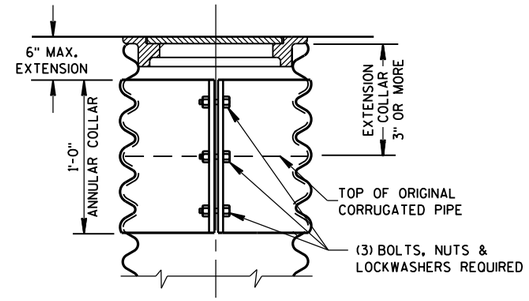

CORRUGATED PIPE EXTENDER

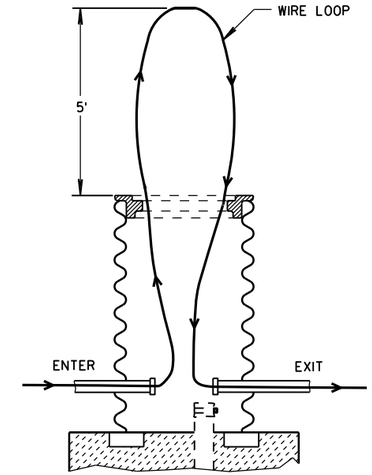

MEASUREMENT DETAIL FOR WIRE/CABLE IN THE PULL BOX

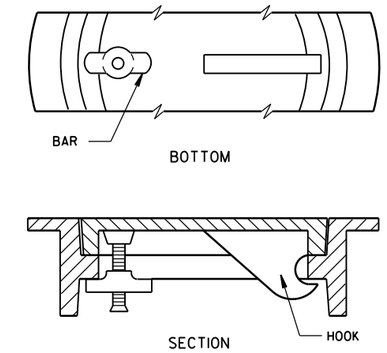

ALTERNATE COVER (LOCKING)

TIGHTENING BAR TYPE

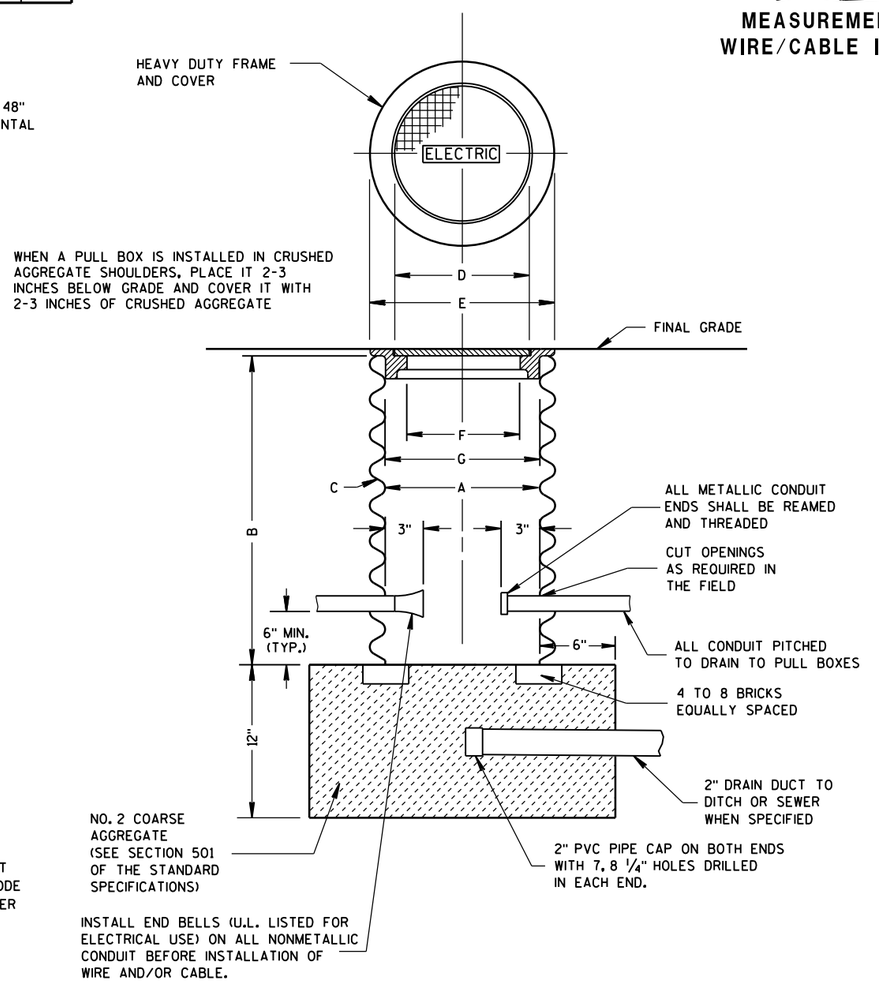

PULL BOX

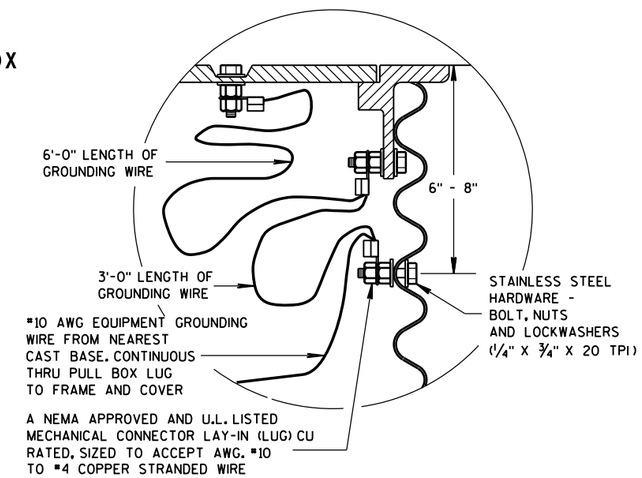

EQUIPMENT GROUNDING LUG AND LOCATION IN STEEL PULL BOXES

GENERAL NOTES

DETAILS OF CONSTRUCTION, MATERIALS AND WORKMANSHIP NOT SHOWN ON THIS DRAWING SHALL CONFORM TO THE PERTINENT REQUIREMENTS OF THE CONTRACT.

ALL FRAMES AND COVERS SHALL BE HEAVY DUTY TYPE, SUITABLE FOR VEHICULAR TRAFFIC LOADS.

PULL BOXES LOCATED IN THE ROADWAYS SHALL HAVE LOCKING COVERS.

ENTRANCE HOLES INTO PULL BOXES SHALL BE CUT WITH A CIRCULAR HOLE SAW OR HYDRAULIC CONDUIT PUNCH. HOLE SIZE SHALL BE THE OUTSIDE DIAMETER OF THE CONDUIT THAT IS TO FIT IN THE OPENING PLUS NO MORE THAN 1/4".

THE CONTRACTOR SHALL NOT INSTALL WIRE IN ANY PULL BOX UNTIL ITS INSTALLATION HAS BEEN INSPECTED AND ACCEPTED BY THE ENGINEER.

GROUNDING LUGS (MECHANICAL CONNECTORS) SHALL BE U.L. LISTED AND APPROVED FOR USE WITH COPPER WIRE.

GROUNDING LUGS ARE NOT REQUIRED IN PULL BOXES WHEN VOLTAGES OF LESS THAN 50 VOLTS AC ARE THE ONLY VOLTAGES ENCOUNTERED IN THE BOXES.

ALL METALLIC CONDUIT IN WHICH WIRE AND/OR CABLE IS TO BE INSTALLED, SHALL BE BUSHED BEFORE INSTALLATION OF THE WIRE AND/OR CABLE.

S.D.D. 9B2, "CONDUIT", APPLIES TO THIS DRAWING.

WHEN PULL BOXES ARE INSTALLED FOR FUTURE USE, DO NOT INSTALL THE EQUIPMENT GROUNDING LUG. THE EQUIPMENT GROUNDING LUG, THE EQUIPMENT GROUNDING ELECTRODE AND THE EQUIPMENT GROUNDING CONDUCTOR SHALL BE REQUIRED AND INSTALLED UNDER A FUTURE WIRING CONTRACT.

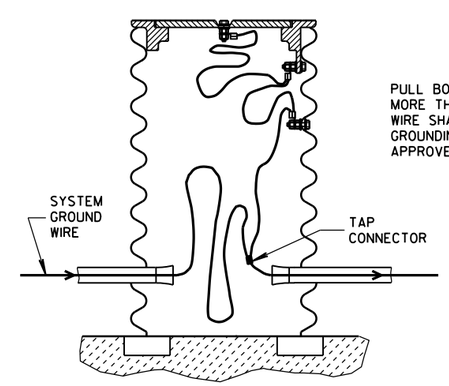

EQUIPMENT GROUNDING LUG AND LOCATION IN STEEL PULL BOXES

PULL BOX

STATE OF WISCONSIN
DEPARTMENT OF TRANSPORTATION

APPROVED
2-7-2013 — DATE
/S/ Ahmet Demirbilek — STATE ELECTRICAL
FHWA

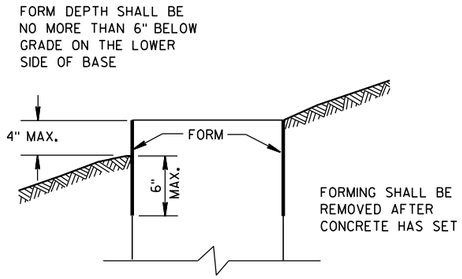

FORMING DETAIL

QUANTITY REQUIREMENTS	CONCRETE BASE TYPE		
	1	2	5
APPROX. CUBIC YARDS OF CONCRETE	0.40	0.57	0.40
LBS. OF HOOP BAR STEEL	NONE	23	16
LBS. OF VERTICAL BAR STEEL	NONE	60	18

GENERAL NOTES

DETAILS OF CONSTRUCTION, MATERIALS AND WORKMANSHIP NOT SHOWN ON THIS DRAWING SHALL CONFORM TO THE PERTINENT REQUIREMENTS OF THE CONTRACT.

BASES SHALL BE EXCAVATED BY USE OF A CIRCULAR AUGER.

TOP SURFACES OF CONCRETE BASES SHALL BE TROWEL FINISHED SMOOTH AND LEVEL.

CONDUIT SIZES AND LOCATIONS SHALL BE AS SHOWN ON THE PLANS.

THE FINAL OR TERMINATING CONCRETE BASE IN A CONDUIT RUN SHALL HAVE A 6" EXIT STUB INSTALLED FOR FUTURE CABLING USE. THE EXIT STUB SHALL BE SIZED AS USED THROUGHOUT THE CONDUIT RUN AS SHOWN AT THE ENTRANCE OF THE BASE.

MINIMUM BENDING RADIUS OF CONDUIT IS EQUAL TO 6 X THE DIAMETER.

CONDUIT HEIGHT ABOVE CONCRETE BASES SHALL BE 1 INCH. ALL METALLIC CONDUIT ENDS SHALL BE REAMED AND THREADED.

ALL CONDUIT ENDS AT THE TOP OF CONCRETE BASES SHALL BE CAPPED IF METALLIC OR PLUGGED IF NONMETALLIC IMMEDIATELY AFTER PLACEMENT AND BEFORE CONCRETE IS POURED. CONDUITS IN WHICH WIRE OR CABLE IS NOT INSTALLED SHALL REMAIN CAPPED OR PLUGGED.

GENERAL NOTES (CONTINUED)

BELL ENDS SHALL BE INSTALLED ON ALL PVC CONDUIT EXPOSED AT THE TOP OF CONCRETE BASES BEFORE INSTALLATION OF CABLE OR WIRE.

ENDS OF CONDUIT INSTALLED BELOW GRADE FOR FUTURE USE SHALL BE CAPPED IF METALLIC OR PLUGGED IF NONMETALLIC.

WHEN REQUIRED TO CONNECT NONMETALLIC CONDUIT TO METALLIC CONDUIT, ONLY ADAPTER FITTINGS, U.L. LISTED FOR ELECTRICAL USE, SHALL BE USED.

IF A BASE REQUIRES A DEEP FORM BECAUSE OF LOOSE DIRT OR FILL, THE FORM SHALL BE REMOVED BEFORE BACKFILLING AROUND THE BASE. BACKFILL SHALL BE TAMPED TIGHT AGAINST THE BARE CONCRETE BASE IN LAYERS OF 1 FOOT OR LESS.

A NO. 4 AWG, STRANDED COPPER EQUIPMENT GROUNDING CONDUCTOR SHALL BE EXOTHERMICALLY WELDED TO THE EQUIPMENT GROUNDING ELECTRODE (GROUND ROD) FOR TYPE 2 AND TYPE 5 BASES.

THE EQUIPMENT GROUNDING CONDUCTOR SHALL BE FURNISHED AND INSTALLED TO ENTER THE BASE OF THE TYPE 2 AND TYPE 5 BASES THROUGH A 1 INCH CONDUIT INSTALLED FOR GROUNDING PURPOSES, LEAVING A 4 FOOT COIL OF WIRE ABOVE THE CONCRETE BASE. THE EQUIPMENT GROUNDING CONDUCTOR SHALL BE NEATLY COILED AND THE COILS TIED TOGETHER.

ANCHOR RODS SHALL BE THREADED 12" IN LENGTH ON EACH END OF THE ROD. ANCHOR RODS SHALL BE MANUFACTURED IN ACCORDANCE WITH SECTION 654.2.1 AND 641.2.2 OF THE STANDARD SPECIFICATIONS, ASTM A-449, OR ASTM A-687 (GRADE 105).

WASHERS AND LOCK WASHERS ARE REQUIRED ON ALL ANCHOR RODS.

WHEN ANCHOR RODS USING THE ALTERNATE "L" BEND ARE FURNISHED, THE 4" "L" BEND SHALL BE IN ADDITION TO THE SPECIFIED ANCHOR ROD BAR LENGTH. THE "L" BEND END SHALL NOT BE THREADED.

ANCHOR RODS SHALL BE INSTALLED WITH MISALIGNMENTS OF LESS THAN 1:40 FROM VERTICAL.

WELDING OF THE ANCHOR RODS TO THE CAGE IS UNACCEPTABLE. TIE WIRES SHALL BE USED.

BAR STEEL REINFORCEMENT SHALL BE COATED WITH POWDERED EPOXY RESIN IN ACCORDANCE WITH SECTION 505 OF THE STANDARD SPECIFICATIONS (LATEST EDITION).

(1) THE MINIMUM DEPTH OF CONDUIT EXITING THE CONCRETE BASE AND INSTALLED BELOW THE TRAVELED WAY SHALL BE 24 INCHES. THE MINIMUM DEPTH OF CONDUIT EXITING THE CONCRETE BASE THAT IS NOT INSTALLED BELOW THE TRAVELED WAY SHALL BE 18 INCHES. THE MAXIMUM DEPTH OF ALL CONDUIT SHALL BE 36 INCHES EXCEPT WITH WRITTEN APPROVAL BY THE ENGINEER.

(2) (4) 1" DIA. X 3'-6" ANCHOR RODS.

(3) (4) 1" DIA. X 5'-0" ANCHOR RODS.

(4) (6) NO. 6 X 6'-8" BAR STEEL REINFORCEMENT.

(5) (7) NO. 4 X 5'-1" BAR STEEL REINFORCEMENT @ 1'-0" C-C.

(6) (4) 1" DIA. X 3'-6" ANCHOR RODS.

(7) (6) NO.4 X 4'-8" BAR STEEL REINFORCEMENT.

(8) (5) NO. 4 X 5'-1" BAR STEEL REINFORCEMENT @ 1'-0" C-C.

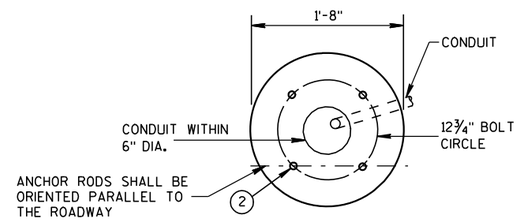

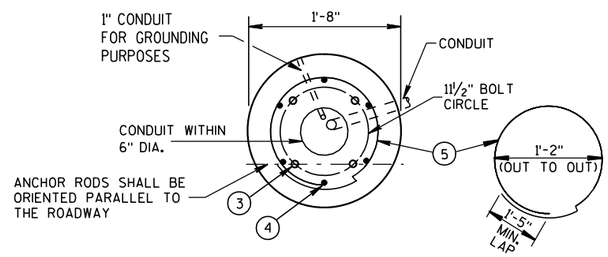

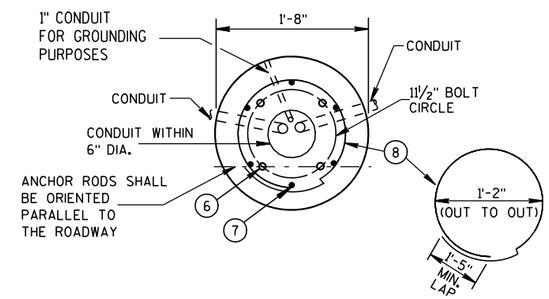

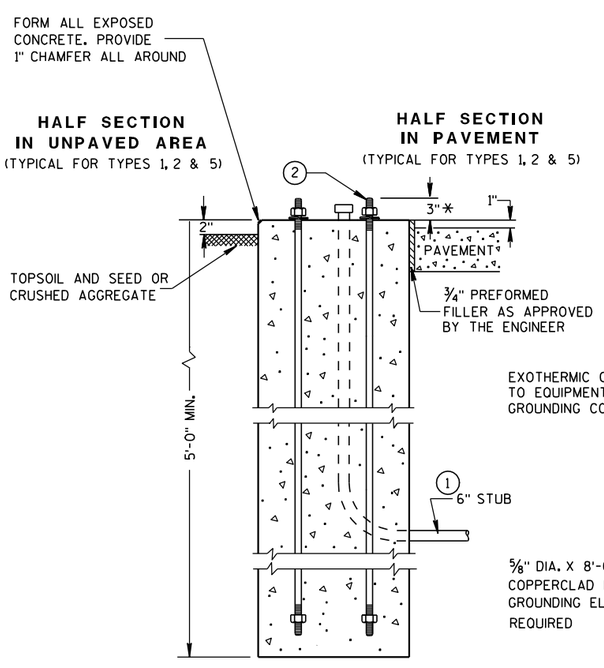

TYPE 1

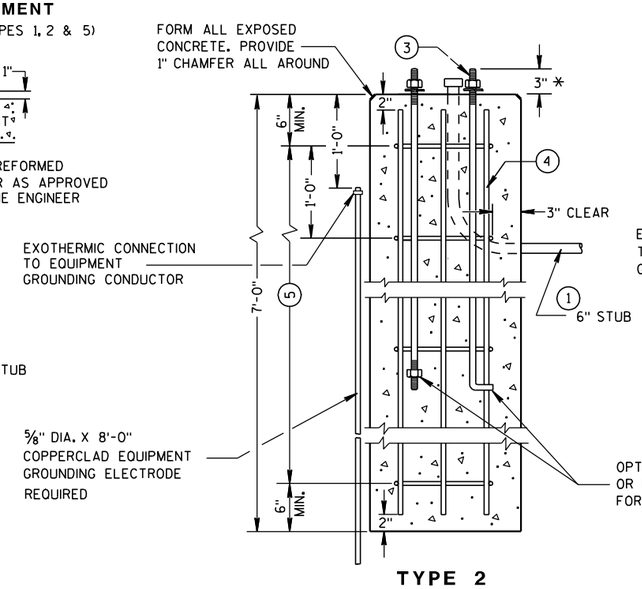

TYPE 2

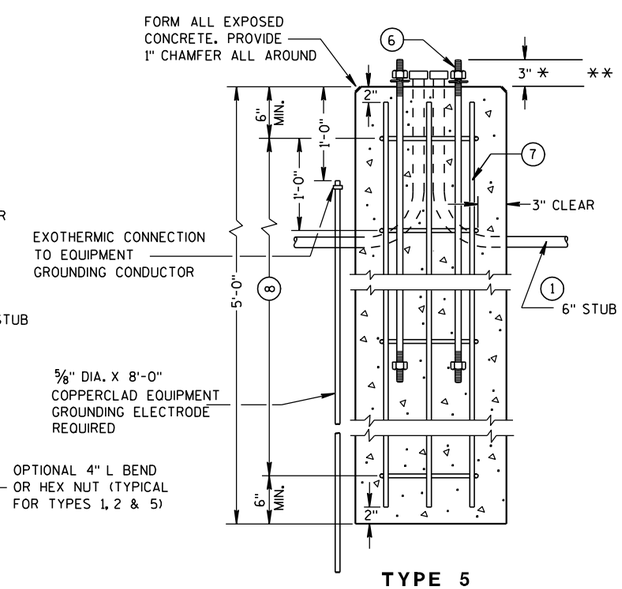

TYPE 5

CONCRETE BASES

* ANY ANCHOR ROD PROJECTION SHORTER THAN 2¾" OR LONGER THAN 3¼" SHALL REQUIRE THE BASE TO BE REMOVED AND REPLACED AT THE CONTRACTORS EXPENSE.

** FOR NONBREAKAWAY INSTALLATIONS, 4½" ± ANCHOR ROD PROJECTION WITH THE USE OF LEVELING NUTS. RODENT SCREEN REQUIRED.

CONCRETE BASES, TYPES 1, 2 & 5

STATE OF WISCONSIN
DEPARTMENT OF TRANSPORTATION

APPROVED
3/3/10 — DATE
/S/ Joanna L. Rush — STATE ELECTRICAL ENGI 130 — HWYS
FHWA

6

S.D.D. 9 C 2-6

6

S.D.D. 9 C 2-6

GENERAL NOTES

DETAILS OF CONSTRUCTION, MATERIALS AND WORKMANSHIP NOT SHOWN ON THIS DRAWING SHALL CONFORM TO THE PERTINENT REQUIREMENTS OF THE CONTRACT.

FOUR (4) BOLTS SHALL BE FURNISHED WITH EACH TRANSFORMER BASE. BOLTS SHALL BE 1" DIAMETER, 4" IN LENGTH, WITH WASHERS, LOCK WASHERS AND NUTS. BOLTS, NUTS AND WASHERS SHALL BE MANUFACTURED IN ACCORDANCE WITH SECTION 641.2.2 OF THE STANDARD SPECIFICATIONS, ASTM A-325, (92,000 YIELD) HEAVY HEX NUT AND BE GALVANIZED IN ACCORDANCE WITH ASTM A-153, CLASS C.

LEVELING SHIMS, IF NEEDED, SHALL BE DESIGNED FOR THE PURPOSE AND USED UNDER CAST BASES WHEN PLUMBING POLES OR STANDARDS DURING INSTALLATION. THE USE OF WASHERS IN LIEU OF PROPER LEVELING SHIMS IS NOT ACCEPTABLE.

SHIM LENGTH SHALL BE LONG ENOUGH TO COMPLETELY COVER THE AREA UNDER THE LENGTH AND WIDTH OF THE BASE MOUNTING FLANGE.

DOUBLE NUTTING IS NOT ACCEPTABLE FOR LEVELING OR MOUNTING PURPOSES.

A NEMA APPROVED AND U.L. LISTED MECHANICAL CONNECTOR (LUG) AL/CU RATED AND SIZED TO ACCEPT #10 AWG STRANDED WIRE, SHALL BE FURNISHED AND INSTALLED IN THE PEDESTAL AND TRANSFORMER BASES.

THE MECHANICAL CONNECTOR SHALL BE INSTALLED USING A 1/4" - 20 (TPI) STAINLESS STEEL HEX HEAD BOLT OF SUFFICIENT LENGTH TO FIRMLY ATTACH THE LUG TO THE BASE.

SHOULD THE MANNER OF ATTACHMENT OF THE LUG REQUIRE WASHERS, HEX NUTS, LOCK WASHER - THEY SHALL BE STAINLESS STEEL AS IS THE BOLT. THE MANNER OF ATTACHMENT SHALL NOT BLOCK ACCESSIBILITY TO WIRE PLACEMENT IN THE CONNECTOR.

PEDESTAL BASE COLLAR THREADING SHALL BE TAPERED AND IN ACCORDANCE WITH NATIONAL PIPE THREADING DIMENSIONS.

BASE COLLAR THREADING SHALL EXTEND INTO THE BASE COLLAR WITH SUFFICIENT DEPTH TO ACCEPT THE INSTALLATION OF TRAFFIC SIGNAL STANDARDS TO A DEPTH OF 1 1/2", THEN TIGHTENING TO A POINT OF BEING IMMOVABLE.

THE ACCESS DOOR SHALL BE OF THE SAME MATERIAL AS THE BASE.

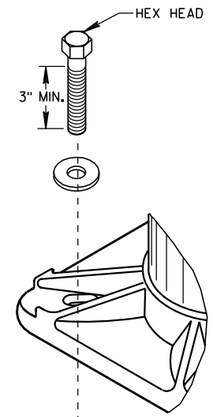

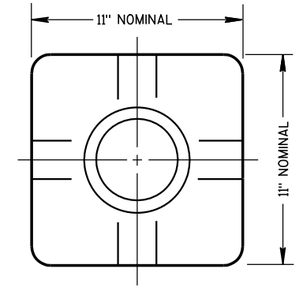

TOP VIEW
(PEDESTAL BASE)

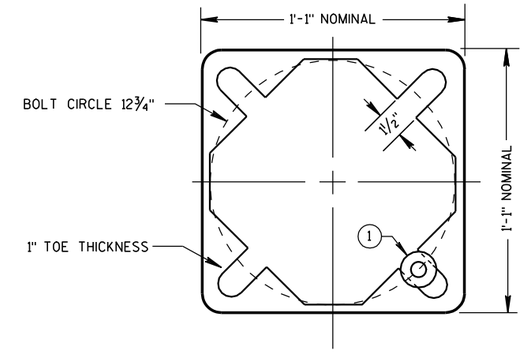

BOTTOM VIEW
(PEDESTAL BASE)

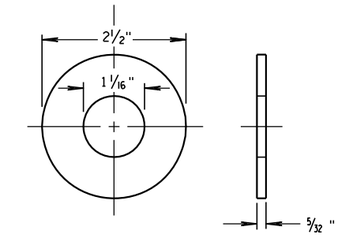

ZINC COATED STEEL WASHER
TO BE PROVIDED BY THE CONTRACTOR

PEDESTAL BASE WASHER (1)

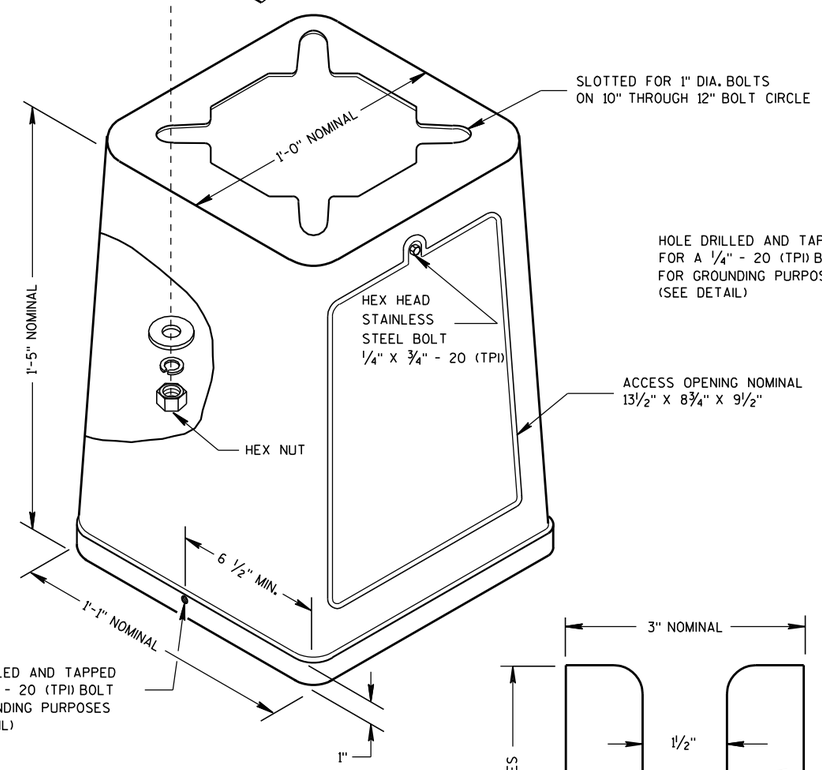

ISOMETRIC VIEW

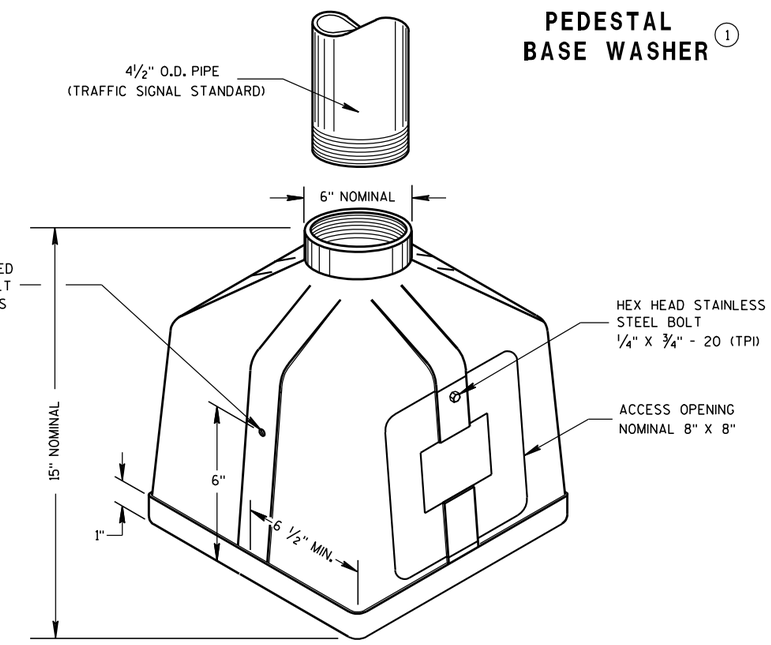

ISOMETRIC VIEW
PEDESTAL BASE

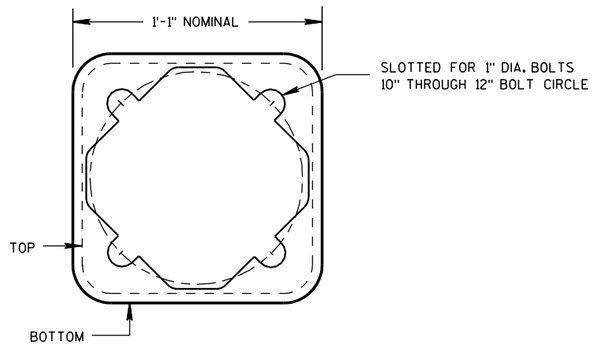

BOTTOM VIEW
(TRANSFORMER BASE)

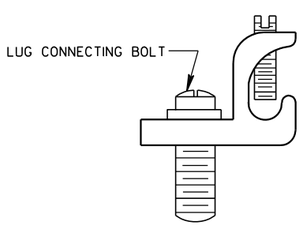

TYPICAL MECHANICAL CONNECTOR LUG

TO BE FURNISHED WITH EACH BASE

TRANSFORMER BASE

INTENDED FOR USE WITH TYPE 2, 3, 4, 5 & 6 POLES

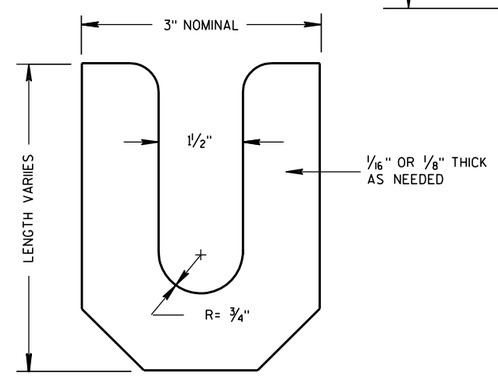

LEVELING SHIM

TRANSFORMER/PEDESTAL BASES	
STATE OF WISCONSIN DEPARTMENT OF TRANSPORTATION	
APPROVED 10/27/09 DATE	/S/ Joanna L. Pruch STATE ELECTRICAL ENGI 131 HWYS
FHWA	

6

6

S.D.D. 9 C 3-3

S.D.D. 9 C 3-3

CONTROL CABINET BASE TYPE	DIMENSIONS				C.Y. CONCRETE (APPROX.)
	H	I	J	K	
TYPE 6 - 30" CABINET	34"	60"	10"	17"	.64
TYPE 7 - 38" CABINET	42"	60"	10"	21"	.93
TYPE 8 - 38" CABINET	42"	72"	12"	21"	1.29
TYPE 9 - VARIABLE	54"	72"	14"	27"	1.56
TYPE 10 - POST MOUNT	AS SHOWN				.65 *

* INCLUDES MAINTENANCE PLATFORM.

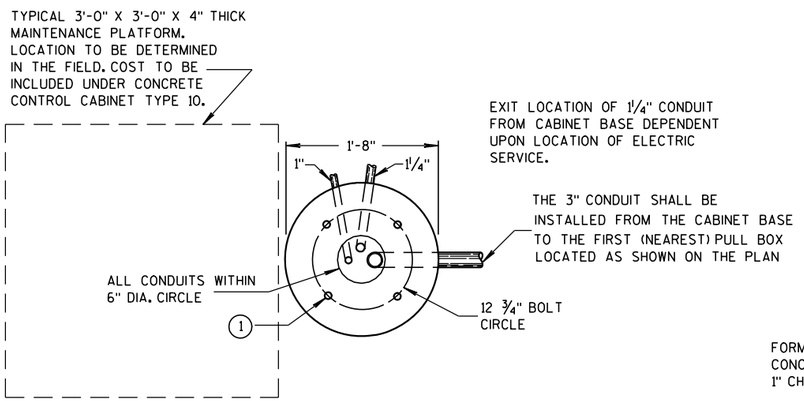

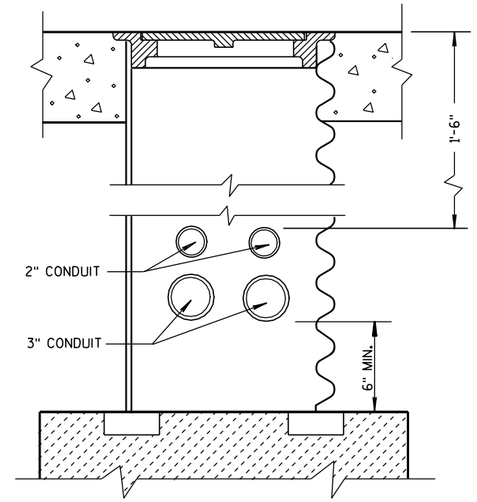

CONDUIT LOCATIONS IN 24" X 36" PULL BOX

(LEADING TO CONTROLLER CABINET BASE TYPE 6, 7, 8 AND 9)

GENERAL NOTES

DETAILS OF CONSTRUCTION, MATERIALS AND WORKMANSHIP NOT SHOWN ON THIS DRAWING SHALL CONFORM TO THE PERTINENT REQUIREMENTS OF THE CONTRACT.

INSTALL FOUR ½ INCH MINIMUM DIAMETER X 4 INCH MINIMUM LENGTH APPROVED CONCRETE MASONRY ANCHORS TO ANCHOR THE CABINET TO TYPE 6, 7, 8, AND 9 BASES. THE ANCHOR STUDS SHALL BE LOCATED AS DIRECTED BY THE ENGINEER TO PROPERLY ANCHOR THE CONTROL CABINET TO THE BASE.

WHEN REQUIRED TO CONNECT NONMETALLIC CONDUIT TO METALLIC CONDUIT, ONLY ADAPTER FITTINGS, U.L. LISTED FOR ELECTRICAL USE, SHALL BE USED.

CONDUIT HEIGHT ABOVE THE CONCRETE BASE SHALL BE 1 INCH.

DEPTH OF CONDUIT INSTALLED BELOW THE TRAVELED WAY SHALL BE 24 INCHES MINIMUM AND 36 INCHES MAXIMUM.

DEPTH OF CONDUIT INSTALLED THAT IS NOT BELOW THE TRAVELED WAY SHALL BE 18 INCHES MINIMUM AND 36 INCHES MAXIMUM.

ANY EXCEPTION TO THE MAXIMUM DEPTH SHALL BE ONLY WITH THE WRITTEN APPROVAL OF THE ENGINEER.

CONTROL CABINET BASE TOP SURFACES SHALL BE TROWEL FINISHED SMOOTH AND LEVEL.

WHEN A TYPE 10 CONTROL CABINET BASE IS USED TO POST MOUNT A CONTROL CABINET, A 36" SQUARE 4" THICK CONCRETE MAINTENANCE PLATFORM SHALL BE REQUIRED ON THE DOOR SIDE OF THE CABINET. THE TOP 1 INCH SHALL BE ABOVE FINISHED GRADE AND BE BROOM FINISHED AND LEVEL.

MAINTENANCE PLATFORMS ARE NOT REQUIRED WHEN THE SURROUNDING AREA IS PAVED.

MINIMUM BENDING RADIUS OF CONDUIT = 6 X THE DIAMETER.

ALL METALLIC CONDUIT ENDS SHALL BE REAMED AND THREADED.

ALL CONDUIT ENDS AT THE TOP OF CONCRETE BASES SHALL BE CAPPED IF METALLIC OR PLUGGED IF NONMETALLIC IMMEDIATELY AFTER PLACEMENT AND BEFORE CONCRETE IS POURED. CONDUITS IN WHICH WIRE OR CABLE IS NOT BEING INSTALLED SHALL REMAIN CAPPED OR PLUGGED.

ALL FOUR (TWO INCH AND THREE INCH) CONDUIT SHALL BE INSTALLED FROM THE CABINET BASE TO THE FIRST (NEAREST PULL BOX LOCATED AS SHOWN ON THE PLANS.

BELL ENDS SHALL BE INSTALLED ON ALL PVC CONDUIT EXPOSED AT THE TOP OF THE CONCRETE BASE BEFORE INSTALLATION OF CABLE OR WIRE.

CONCRETE FORM DEPTH BELOW FINISHED GRADE SHALL BE 6" MAXIMUM. CONCRETE FORMS SHALL BE REMOVED AFTER CONCRETE HAS SET.

WHEN ANCHOR RODS USING THE ALTERNATE L BEND ARE FURNISHED FOR THE TYPE 10 BASE, THE 4" L BEND SHALL BE IN ADDITION TO THE SPECIFIED ANCHOR ROD BAR LENGTH.

THE "L" BEND SHALL NOT BE THREADED.

STRAIGHT ANCHOR RODS SHALL BE THREADED 12" IN LENGTH ON EACH END OF THE ROD.

ANCHOR RODS SHALL BE INSTALLED WITH MISALIGNMENTS OF LESS THAN 1:40 FROM VERTICAL.

WHEN THIS DRAWING IS USED FOR STREET LIGHTING CABINET BASES, CONDUIT MAY BE DIFFERENT AS SHOWN ON THE PLAN OR AS DIRECTED BY THE ENGINEER.

(1) FOUR (4) ANCHOR RODS, 1" DIA. X 3'-6"
ANCHOR RODS SHALL BE MANUFACTURED IN ACCORDANCE WITH SECTION 654.2.1 AND 641.2.2 OF THE STANDARD SPECIFICATIONS.

6

HALF SECTION IN UNPAVED AREA

HALF SECTION IN PAVED AREA

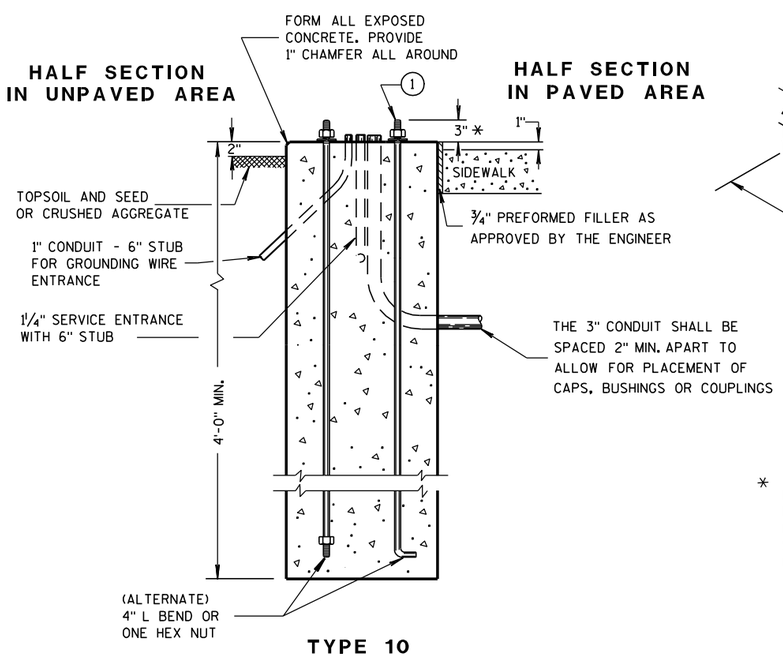

TYPE 10

* ANY ANCHOR ROD PROJECTION SHORTER THAN 2¾" OR LONGER THAN 3¼" SHALL REQUIRE THE BASE TO BE REMOVED AND REPLACED AT THE CONTRACTORS EXPENSE.

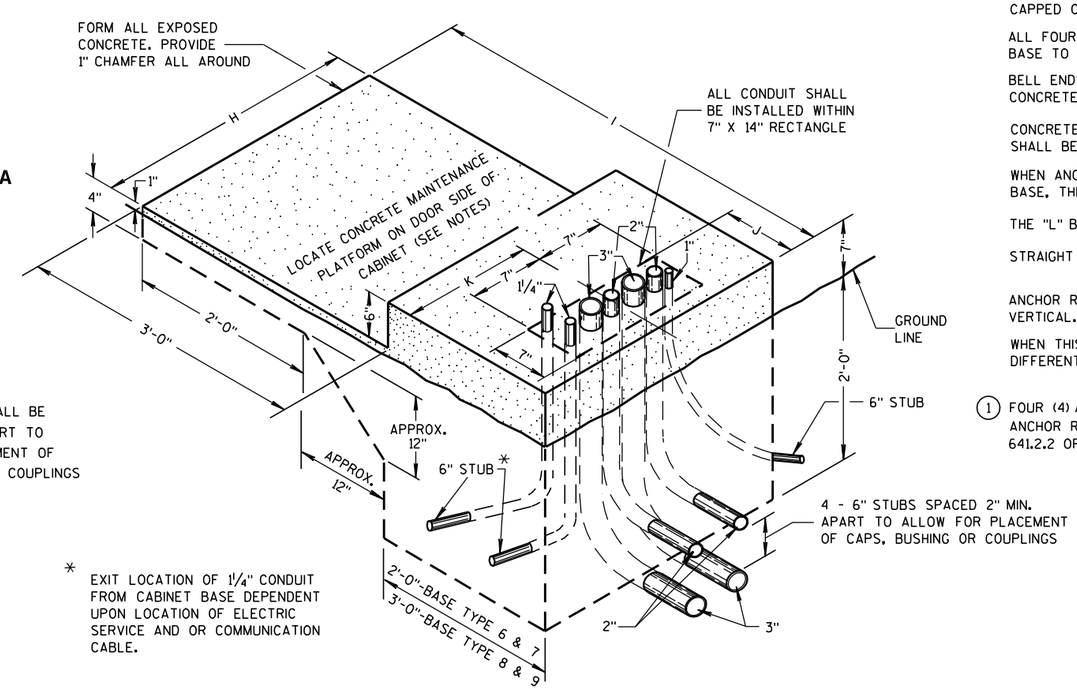

* EXIT LOCATION OF 1¼" CONDUIT FROM CABINET BASE DEPENDENT UPON LOCATION OF ELECTRIC SERVICE AND OR COMMUNICATION CABLE.

TYPE 6,7,8 AND 9
(ISOMETRIC VIEW)

CONCRETE CONTROL CABINET BASES

CONCRETE CONTROL CABINET BASES

STATE OF WISCONSIN
DEPARTMENT OF TRANSPORTATION

APPROVED
3/3/10 — DATE
/S/ Joanna L. — STATE ELECTRICAL ENGI
HWYS
FHWA

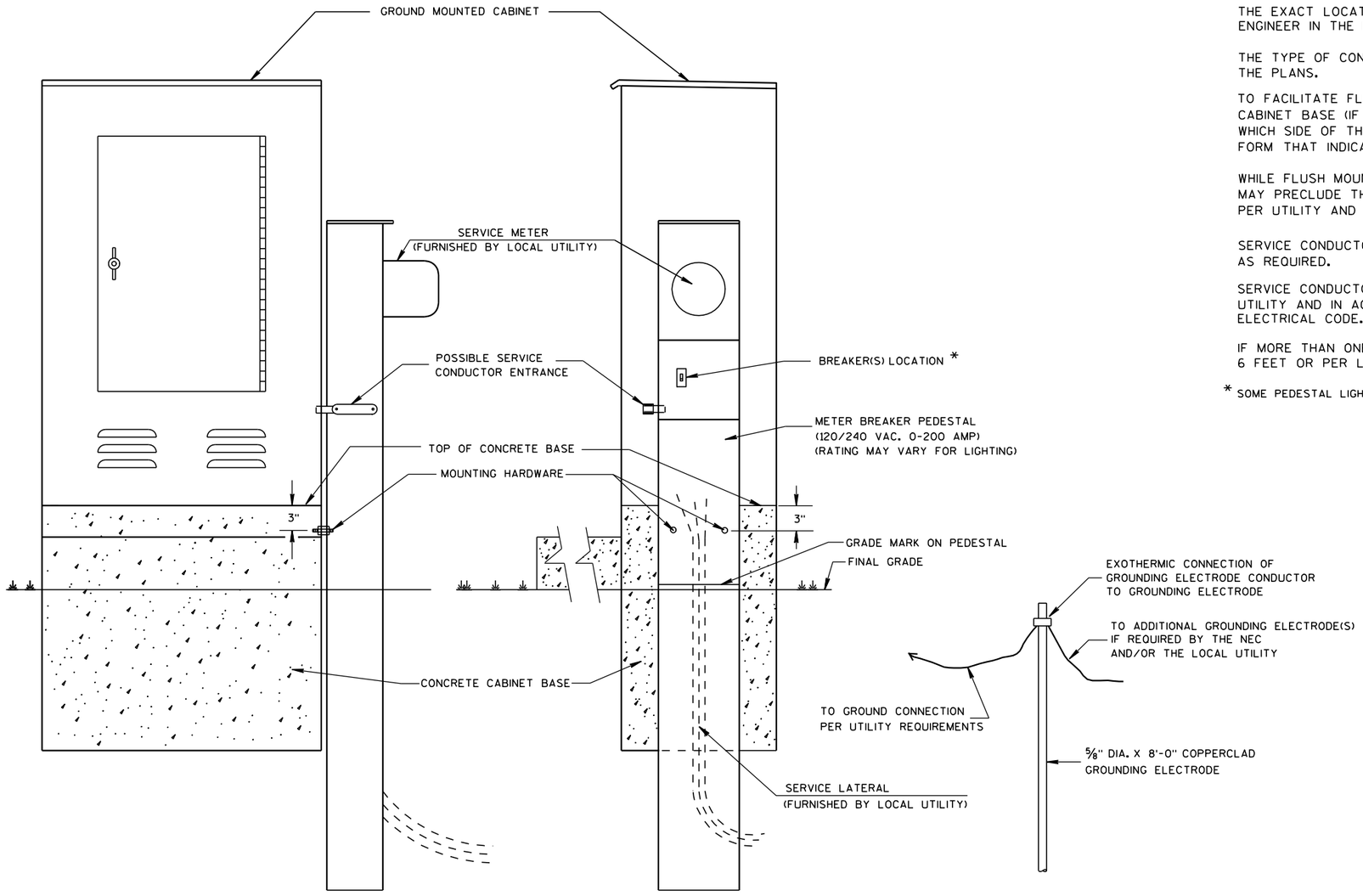

TYPICAL CABINET SERVICE INSTALLATION

GENERAL NOTES

DETAILS OF CONSTRUCTION, MATERIALS AND WORKMANSHIP NOT SHOWN ON THIS DRAWING SHALL CONFORM TO THE PERTINENT REQUIREMENTS OF THE CONTRACT.

THE EXACT LOCATION OF THE METER BREAKER PEDESTAL SHALL BE DETERMINED BY THE ENGINEER IN THE FIELD.

THE TYPE OF CONCRETE CABINET BASE TO BE INSTALLED SHALL BE AS CALLED FOR IN THE PLANS.

TO FACILITATE FLUSH MOUNTING OF THE METER BREAKER PEDESTAL AGAINST THE SIDE OF THE CABINET BASE (IF FLUSH MOUNTING POSSIBLE. CONFER WITH THE LOCAL UTILITY TO DETERMINE WHICH SIDE OF THE CONCRETE BASE THE ELECTRICAL SERVICE LATERAL WILL APPROACH. THEN FORM THAT INDICATED SIDE FOR FULL SIDE DEPTH.

WHILE FLUSH MOUNTING IS THE MOST DESIRABLE MOUNTING CONFIGURATION UTILITY REQUIREMENTS MAY PRECLUDE THIS OPTION. CONTRACTOR MUST PROVIDE UTILITY APPROVED PEDESTAL AND INSTALL PER UTILITY AND MANUFACTURERS REQUIREMENTS.

SERVICE CONDUCTOR ENTRANCES SHALL BE RIGID METALLIC CONDUIT, NIPPLES AND/OR CONDULETS AS REQUIRED.

SERVICE CONDUCTOR ENTRANCES SHALL BE SIZED AND LOCATED AS REQUIRED BY THE LOCAL UTILITY AND IN ACCORDANCE WITH APPROPRIATE ARTICLES OF THE LATEST ACCEPTED NATIONAL ELECTRICAL CODE.

IF MORE THAN ONE GROUNDING ELECTRODE IS REQUIRED, THE DISTANCE APART SHALL BE 6 FEET OR PER LOCAL UTILITY REGULATIONS.

* SOME PEDESTAL LIGHTING PLANS SHOW MAIN LUGS ONLY.

CABINET SERVICE INSTALLATION (METER BREAKER PEDESTAL)

STATE OF WISCONSIN
DEPARTMENT OF TRANSPORTATION

APPROVED
10/27/09 — DATE
/S/ Joanna L. Bush — STATE ELECTRICAL ENGI
HWYS
FHWA

*RISE FOR 4' ARM SHALL BE 2'-0".

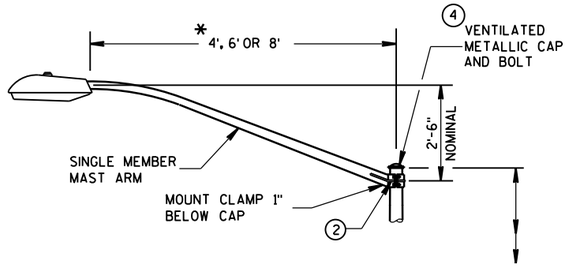

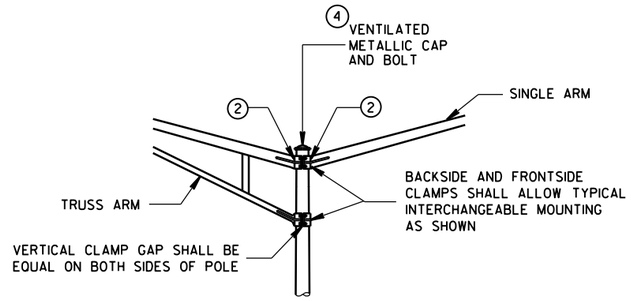

INTERCHANGEABLE MOUNTING DETAIL

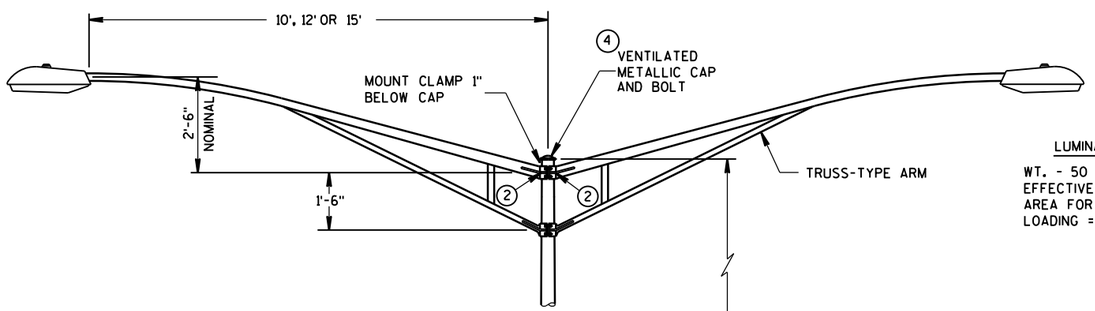

LUMINAIRE

WT. - 50 LBS.
EFFECTIVE PROJECTED
AREA FOR WIND
LOADING = 1.5 SQ. FT.

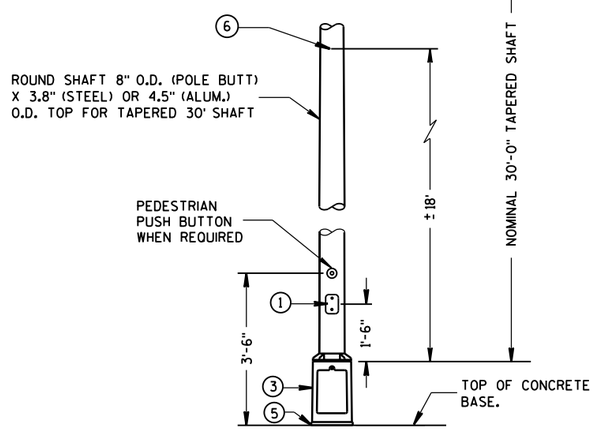

TYPE 5 POLE MOUNTING CONFIGURATION

(MAXIMUM LOAD)

LIGHTING ONLY

GENERAL NOTES

DETAILS OF CONSTRUCTION, MATERIALS AND WORKMANSHIP NOT SHOWN ON THIS DRAWING SHALL CONFORM TO THE PERTINENT REQUIREMENTS OF THE CONTRACT.

ALL TYPE 5 POLE MOUNTINGS SHALL BE DESIGNED TO INCLUDE TWIN 15' ARMS WITH LUMINAIRES.

POLES SHALL BE GALVANIZED STEEL OR ALUMINUM, AS CALLED FOR IN THE CONTRACT.

TYPE 5 ALUMINUM POLES SHALL BE CONSTRUCTED OF 6063-T6 ALUMINUM ALLOY. SLEEVING INSIDE THE POLE IS NOT ACCEPTABLE.

THE TYPE 5 ALUMINUM POLES SHALL HAVE A MINIMUM WALL THICKNESS OF 0.188".

TYPE 5 STEEL POLES SHALL HAVE A MINIMUM WALL THICKNESS OF U.S. STANDARD 11 GAGE (.1196").

THE SLIPFITTER END OF THE LUMINAIRE MAST ARM SHALL BE A NOMINAL 2⅜ INCHES IN OUTSIDE DIAMETER. THE STRAIGHT PORTION OF THE SLIPFITTER END OF THE LUMINAIRE ARM SHALL BE A NOMINAL 12 INCHES IN LENGTH.

WHEN TRANSFORMER BASES ARE USED, WIRE CONEECTIONS SHALL BE MADE IN THE TRANSFORMER BASE.

1. 4" x 6" REINFORCED HANDHOLE & COVER ASSEMBLY WITH 2 (TWO) ¼" X ¾" - 20 TPI HEX HEAD STAINLESS STEEL BOLTS.
2. GROMMETS, 1" CHASE NIPPLES OR 1" CLOSE CONDUIT NIPPLES WITH BUSHINGS SHALL BE PROVIDED FOR 1⅜" HOLE IN POLE SHAFT FOR WIRING.
3. CAST ALUMINUM TRANSFORMER BASE, WHEN REQUIRED.
4. FURNISH AND INSTALL VENTILATED, CAST, METALLIC (ALUMINUM ALLOY) CAPS. FASTEN CAPS WITH ONE (1) ¼" X ¾" - 20 TPI STAINLESS STEEL, HEX HEAD BOLT.
5. SHIMMING, IF NEEDED, SHALL BE LOCATED BETWEEN THE CONCRETE FOUNDATION AND THE TRANSFORMER BASE.
6. INTERNAL DUMBBELL-TYPE VIBRATION DAMPER.

POLE MONTINGS FOR
LIGHTING UNITS, TYPE 5
(30 FEET)

STATE OF WISCONSIN
DEPARTMENT OF TRANSPO

6

S.D.D. 9 E 1-12d

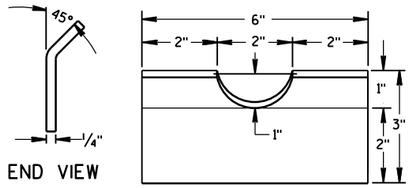

FRONT VIEW

RECTANGULAR CLAMP SHIM

(4 TO A SET)

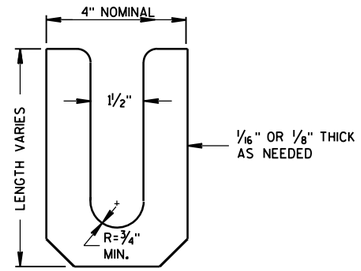

LEVELING SHIM (15)

SHALL BE ALUMINUM

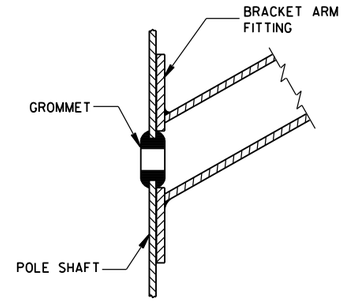

TYPICAL APPLICATION OF GROMMET IN POLE SHAFT

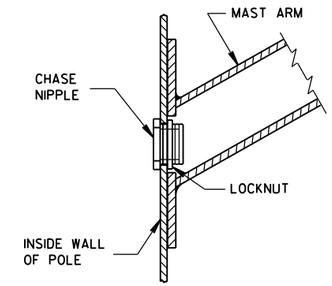

TYPICAL APPLICATION OF CHASE NIPPLE IN POLE SHAFT

GENERAL NOTES

CLAMP BOLT-NUT TIGHTENING TORQUE SHALL BE INDICATED BY INDENT STAMPING (1/2 INCH NUMERALS AND LETTERS) OR WEATHERPROOF PRINTING ON THE INSIDE OF THE CLAMP THAT IS WELDED TO THE ARM MEMBER.

(10) 4.5" I.D. FOR LUMINAIRE MAST ARM CLAMP.
6.625" I.D. FOR TROMBONE MAST ARM CLAMP.

(11) INDIVIDUAL BASE PLATE ANCHOR ROD COVERS. (4 REQUIRED)

(12) BASE PLATE SLOTTED TO ACCEPT 11" THROUGH 12" BOLT CIRCLE USING 1" DIAMETER ANCHOR RODS.

(13) OUTSIDE SHIM DIAMETER - (4.5" O.D. FOR LUMINAIRE MAST ARM)
(6.625" O.D. FOR TROMBONE MAST ARM)

(14) VARIABLE SHIM THICKNESS - (0.10", 0.25", 0.35", 0.53" OR 0.70")

SHIM THICKNESS FOR TROMBONE MAST ARMS MAY BE TYPICALLY 0.25", 0.35", 0.53" OR 0.70".

SHIM THICKNESS FOR LUMINAIRE MAST ARMS MAY BE TYPICALLY 0.10", 0.25" OR 0.35".

SHIM MATERIAL SHALL BE ALUMINUM ALLOY.

SHIM THICKNESS SHALL BE IMPRESSED INTO EACH SHIM. NUMERALS SHALL BE 1/4" HIGH AND LEGIBLE.

THE CONTRACTOR SHALL SUBMIT TWO COPIES OF ALL SHIM SHOP DRAWINGS TO THE ENGINEER FOR APPROVAL.

(15) LEVELING SHIMS, DESIGNED FOR THE PURPOSE, SHALL BE USED WHEN PLUMBING POLES. THE USE OF WASHERS IN LIEU OF PROPER LEVELING SHIMS IS NOT ACCEPTABLE. LEVELING SHIMS SHALL BE USED ONLY BETWEEN THE TOP OF THE CONCRETE BASE AND A METALLIC BASE PLATE.

SHIMS SHALL BE LONG ENOUGH AND WIDE ENOUGH TO COMPLETELY COVER THE AREA UNDER THE LENGTH AND WIDTH OF THE BASE MOUNTING FLANGE.

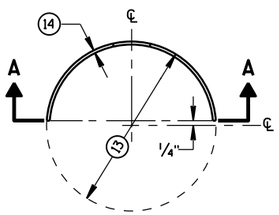

PLAN VIEW

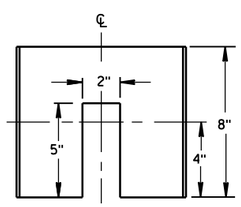

SECTION A-A

CIRCULAR CLAMP SHIM

(2 TO A SET)

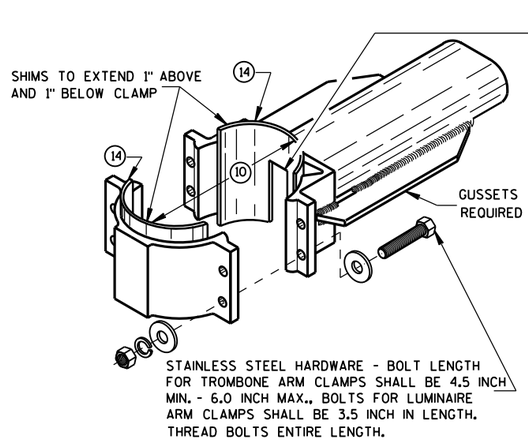

TYPICAL TROMBONE MAST ARM AND SINGLE LUMINAIRE MAST ARM MOUNTING CLAMP

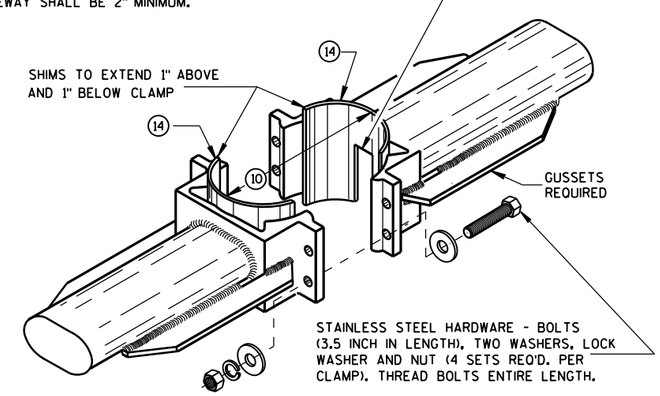

TYPICAL LUMINAIRE MAST ARM (DOUBLE) MOUNTING BRACKETS

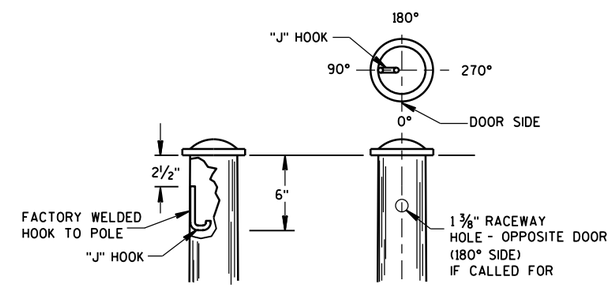

TYPICAL "J" HOOK LOCATION

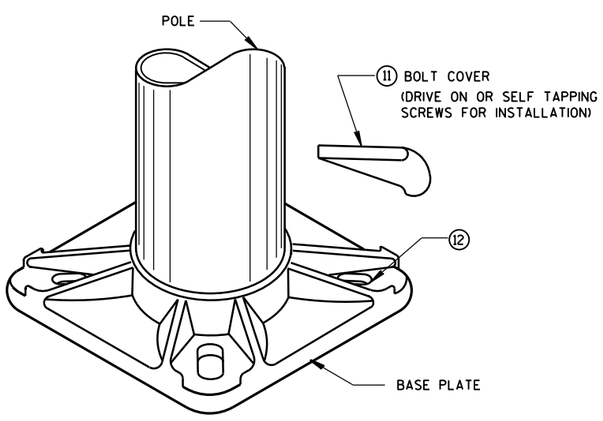

BASE PLATE

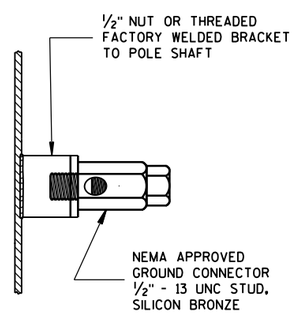

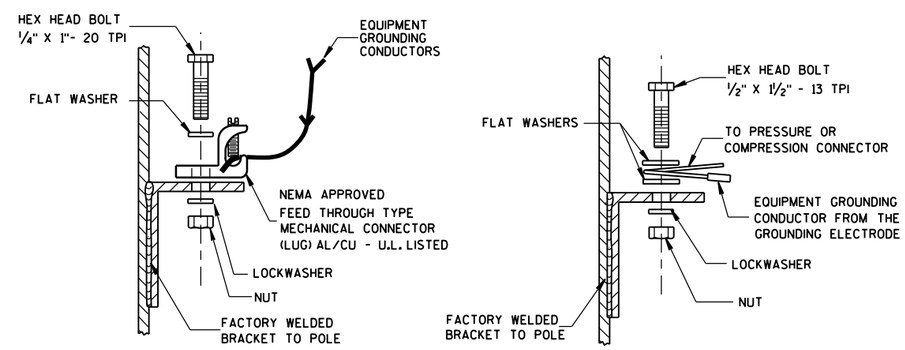

TYPICAL GROUNDING CONNECTIONS

NUT, BOLT AND WASHERS SHALL BE STAINLESS STEEL

HARDWARE DETAILS FOR POLE MOUNTINGS	
STATE OF WISCONSIN DEPARTMENT OF TRANSPORTATION	
APPROVED 2/7/2013 DATE	/S/ Ahmet Demirbilek STATE ELECTRICAL
FHWA	

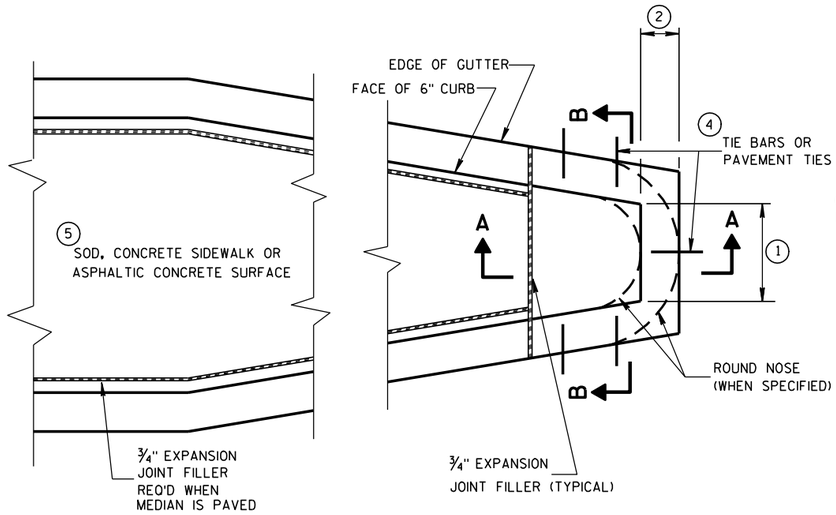

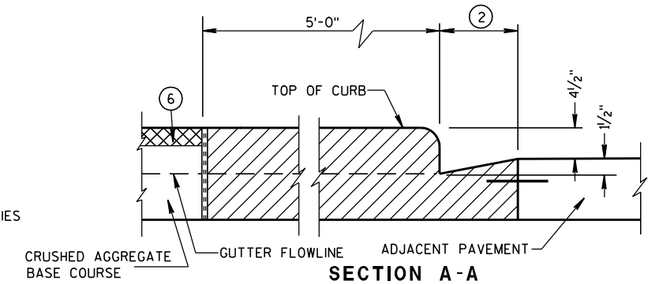

SECTION A-A

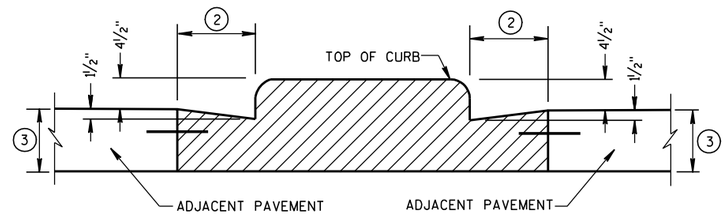

SECTION B-B

CONCRETE MEDIAN BLUNT NOSE DETAIL

GENERAL NOTES

DETAILS OF CONSTRUCTION, MATERIALS AND WORKMANSHIP NOT SHOWN ON THIS DRAWING SHALL CONFORM TO THE PERTINENT REQUIREMENTS OF THE STANDARD SPECIFICATIONS AND THE APPLICABLE SPECIAL PROVISIONS.

1. SEE PLAN FOR MEDIAN NOSE WIDTH AND RADIUS (FOR ROUND NOSE ALTERNATE).
2. WIDTH OF GUTTER TO MATCH EXISTING ADJACENT GUTTER OR AS SPECIFIED ELSEWHERE IN THE PLAN.
3. DEPTH EQUAL TO ADJACENT PAVEMENT. ADJACENT PAVEMENT STRUCTURE DETAILS ARE SHOWN ON THE PLAN. TYPICAL OPTIONS ARE:
   (1) NEW OR EXISTING CONCRETE PAVEMENT.
   (2) ASPHALTIC CONCRETE PAVEMENT OVER NEW OR EXISTING CONCRETE BASE COURSE.
   (3) ASPHALTIC CONCRETE PAVEMENT OVER CRUSHED AGGREGATE BASE COURSE.
4. TIE BARS OR PAVEMENT TIES REQUIRED IN NEW CONCRETE PAVEMENT OR CONCRETE BASE COURSE. TIE BARS SHALL BE NO. 4 X 2'-0" SPACED AT 2'-0" C-C.

   PAVEMENT TIES REQUIRED IN EXISTING CONCRETE BASE COURSE. PAVEMENT TIES SHALL BE NO. 6 X 1'-0" SPACED AT 3'-0" C-C INSTALLED ON A HORIZONTAL SKEW OF 6:1. THE DIRECTION OF SKEW SHALL ALTERNATE AFTER EVERY ONE OR TWO BARS.
5. SURFACE TYPE AND DETAILS ARE SHOWN ELSEWHERE IN THE PLAN.

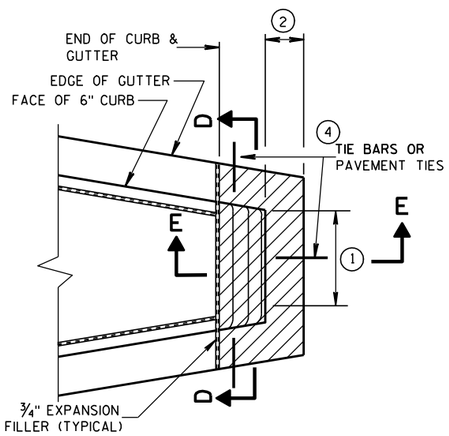

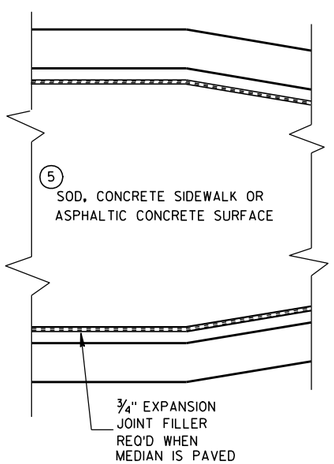

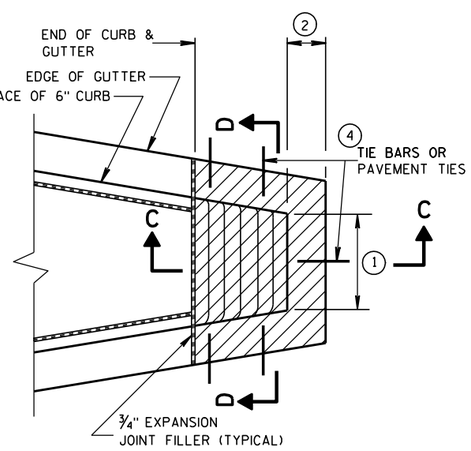

CONCRETE MEDIAN SLOPED NOSE TYPE 1

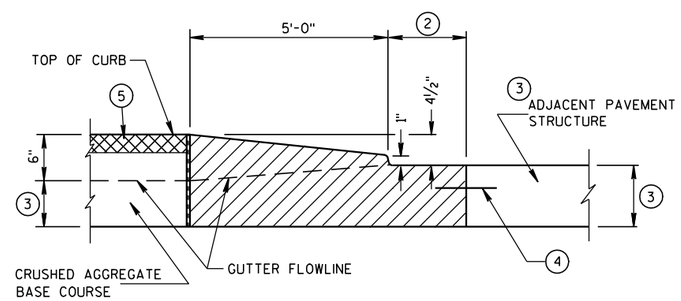

SECTION C-C

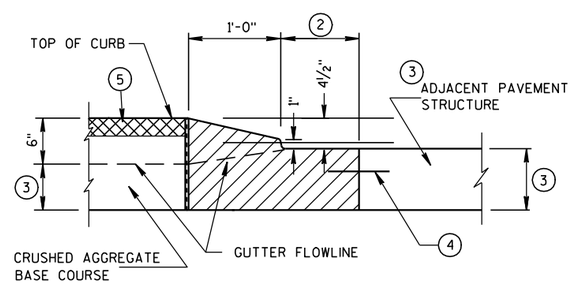

SECTION E-E

CONCRETE MEDIAN SLOPED NOSE TYPE 2

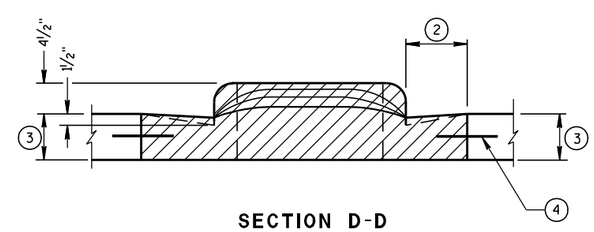

SECTION D-D

CONCRETE MEDIAN NOSE	
STATE OF WISCONSIN DEPARTMENT OF TRANSPORTATION	
APPROVED 6/8/2006 DATE	/S/ Jerry H. ---- ROADWAY STANDARDS ENGINEER
FHWA	NT

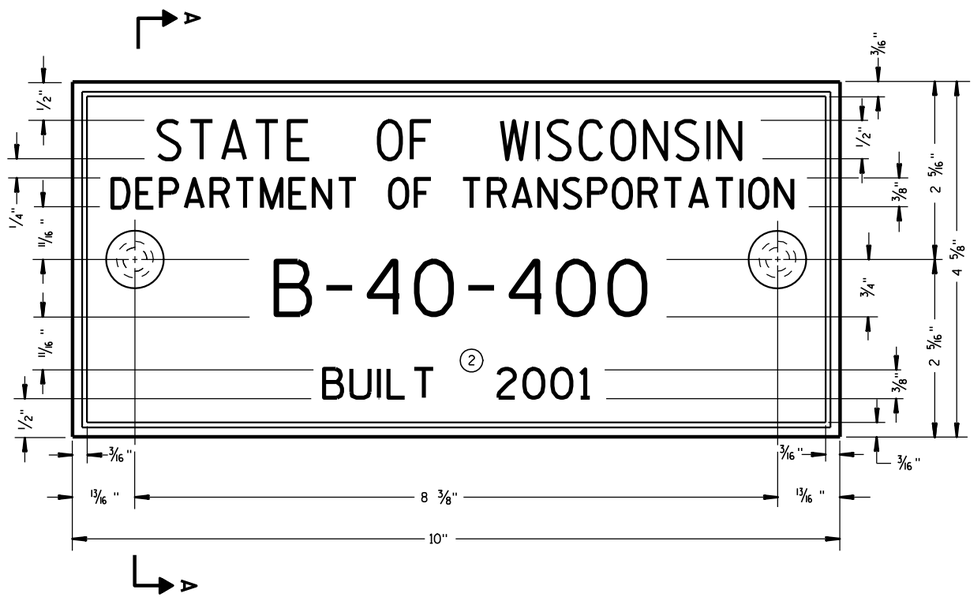

TYPICAL NAME PLATE

(BRIDGES, CULVERTS, AND RETAINING WALLS)

GENERAL NOTES

NAME PLATES TO BE INSTALLED ON BRIDGES, CULVERTS, AND RETAINING WALLS SHALL CONFORM TO THE REQUIREMENTS OF SECTION 502.3.11 OF THE STANDARD SPECIFICATIONS.

THE BRIDGE NUMBER AND YEAR BUILT SHOWN ON THIS DRAWING ARE EXAMPLES ONLY. SEE CONSTRUCTION PLANS FOR INDIVIDUAL NUMBERING AND YEAR BUILT.

① EPOXY RESIN SHALL BE FROM AN APPROVED MANUFACTURER AND USED IN ACCORDANCE WITH MANUFACTURER'S RECOMMENDATIONS.

② REHABILITATION OF AN EXISTING STRUCTURE SHOULD USE THE DATE OF ORIGINAL STRUCTURE CONSTRUCTION.

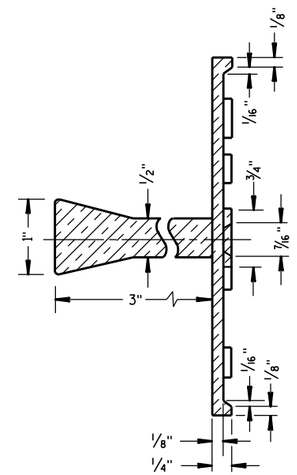

SECTION A-A

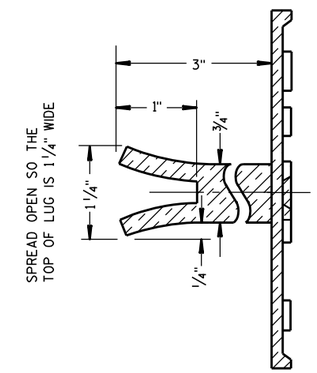

ALTERNATE LUG

FOR MULTI-UNIT STRUCTURES
LINE 3 ABOVE SHALL READ

B = BRIDGE
C = CULVERT
R = RETAINING WALL

COUNTY NO.

BRIDGE NO.

UNIT NO. FOR MULTIPLE
UNIT BRIDGE

B-40-400-1A

NUMBERING DESIGNATION
MULTI-UNIT STRUCTURES

① ADHERE ANCHOR LUG TO PRECAST RETAINING WALL WITH EPOXY RESIN.

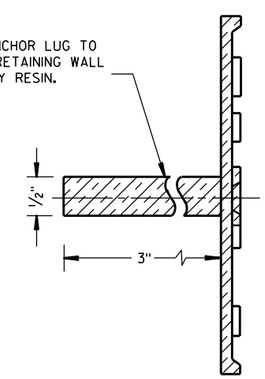

ALTERNATE LUG

(FOR ATTACHMENT TO PRECAST STRUCTURES)

NAME PLATE (STRUCTURES)	
STATE OF WISCONSIN DEPARTMENT OF TRANSPORTATION	
APPROVED	
3/26/10 DATE	/S/ Scot Beck -- CHIEF STRUCTURAL DEVELOP ENGINEER
FHWA	

6

6

S.D.D. 12 A 3-10

S.D.D. 12 A 3-10

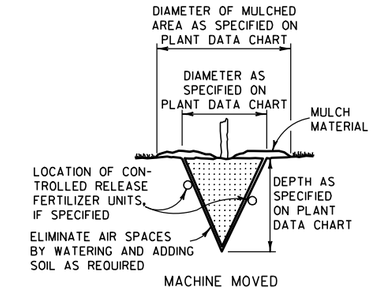

MACHINE MOVED

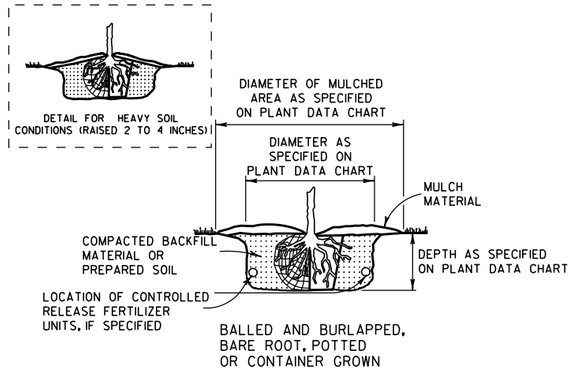

BALLED AND BURLAPPED, BARE ROOT, POTTED OR CONTAINER GROWN

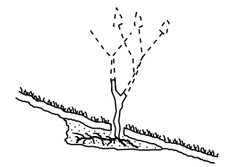

ACCOMMODATE ROOTS (SMOOTH AND STAGHORN SUMAC)

NOTE:
1) ENGINEER SHALL REQUIRE 3 SLITS IN POT TO SPEED DETERIORATION
2) METAL, PLASTIC OR OTHER NONDEGRADABLE POTS SHALL BE REMOVED PRIOR TO PLANTING

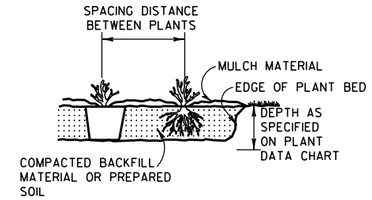

PREPARED BED (BARE ROOT AND POTTED)

PLANTING

TOP VIEW

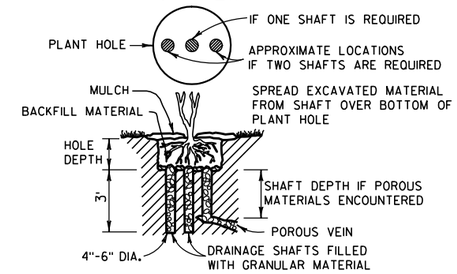

NOTE:
DRAINAGE SHAFT AS SPECIFIED ON PLANT DATA CHART

DRAINING

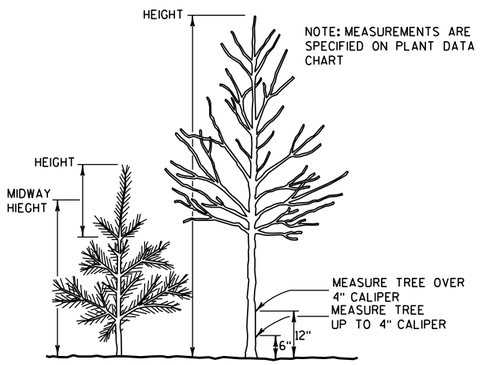

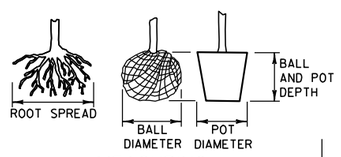

MEASURING

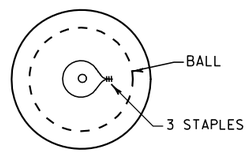

TOP VIEW

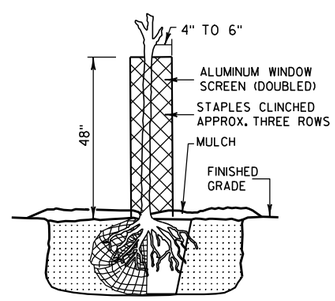

RODENT PROTECTION

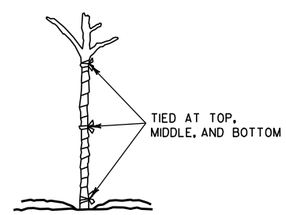

WRAPPING

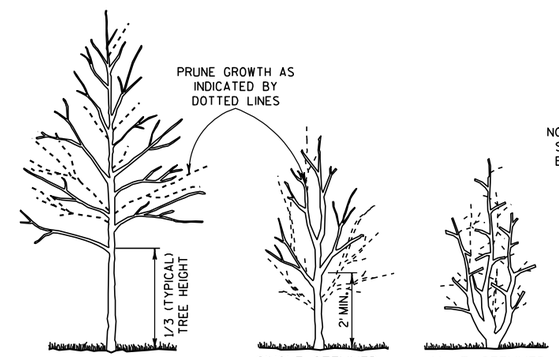

TALL DECIDUOUS TREES (ASH, MAPLE, LINDEN, OAK)

SINGLE STEMMED LOW DECIDUOUS TREES (CRABS AND OTHER SINGLE STEM TYPE)

MULTI-STEMMED LOW DECIDUOUS TREES OR LARGE SHRUBS (HAWTHORN, SERVICEBERRY)

NOTE: WHEN PRUNING, PRESERVE CHARACTER AND SHAPE OF TREE. AVOID LEAVING STUBS - REMOVE BRANCH OR TWIG BACK TO THE NEAREST CROTCH
1) PRUNE TO REMOVE DEAD AND BROKEN BRANCHES
2) PRUNE TO REMOVE BRANCHES THAT TOUCH OR ARE TOO CLOSE TO OTHER BRANCHES

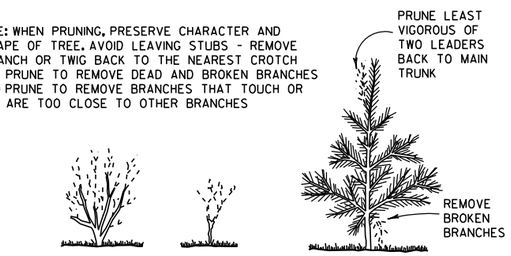

SHRUBS (GRAY DOGWOOD ARROWWOOD VIBURNUM)

SUMAC

TREE TYPE EVERGREENS (PINE, SPRUCE, FIR) EVERGREENS USUALLY ARE NOT PRUNED

PRUNING

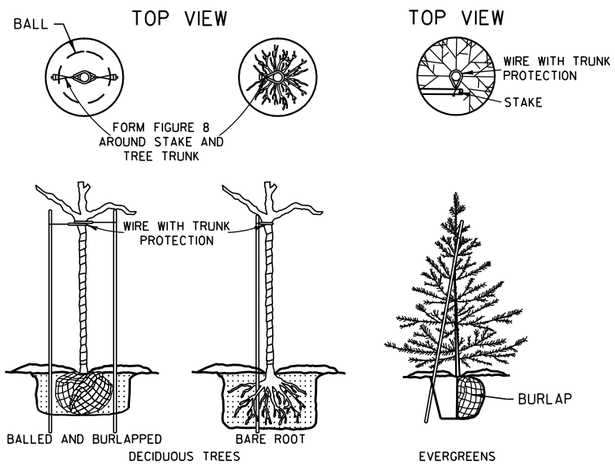

NOTE: BRACING STAKE
1) SHALL BE DRIVEN INTO THE GROUND AS CLOSE TO THE TREE AS POSSIBLE WITHOUT DAMAGING THE BRANCHES.
2) MAY BE DRIVEN AT SUCH AN ANGLE THAT IT DOES NOT PENETRATE THE BALL OR POT.
3) SHALL NOT PROTRUDE ABOVE THE TOP OF THE TREE; AND
4) SHALL HAVE A HOLE NEAR THE TOP TO HOLD THE WIRE IN PLACE.

BRACING

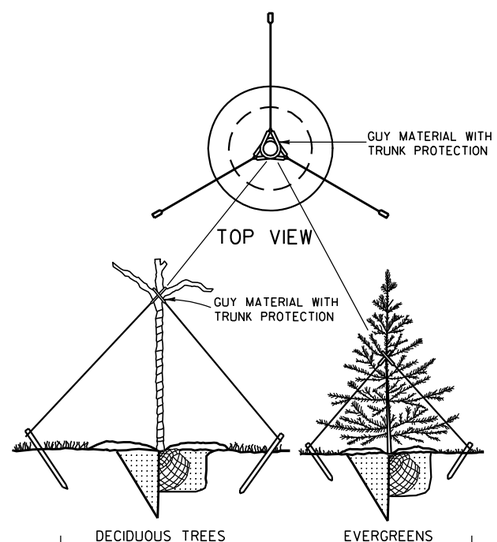

GUYING

PRUNE LARGER SHRUBS BY REMOVING FROM ONE-THIRD TO ONE-HALF TOP GROWTH AS INDICATED BY DOTTED LINE

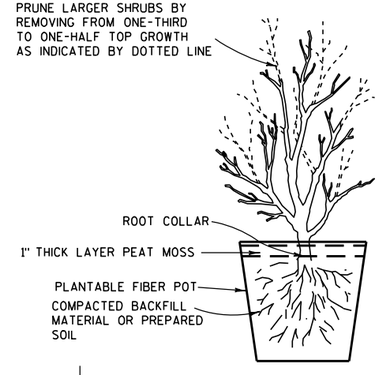

POTTING

NOTES

DETAILS OF CONSTRUCTION NOT SHOWN ON THIS DRAWING SHALL CONFORM TO THE PERTINENT REQUIREMENTS OF THE STANDARD SPECIFICATIONS AND THE APPLICABLE SPECIAL PROVISIONS.

BRACING, WRAPPING, GUYING, RODENT PROTECTION, FERTILIZER AND MULCH SHALL BE USED ONLY WHEN SPECIFIED ON THE PLANT DATA CHART (PART OF PLAN) OR SPECIAL PROVISIONS.

TREE PLANTING DETAIL

STATE OF WISCONSIN
DEPARTMENT OF TRANSPORTATION

APPROVED
4/11/94 — DATE
/S/ Rory L. Rhinesmith — CHIEF METHODS DEVELOPMENT ENGINEER
FHWA

6

S.D.D. 14 A 2-1

GENERAL NOTES

DETAILS OF CONSTRUCTION, MATERIALS AND WORKMANSHIP NOT SHOWN ON THIS DRAWING SHALL CONFORM TO THE PERTINENT REQUIREMENTS OF THE STANDARD SPECIFICATIONS AND THE APPLICABLE SPECIAL PROVISIONS.

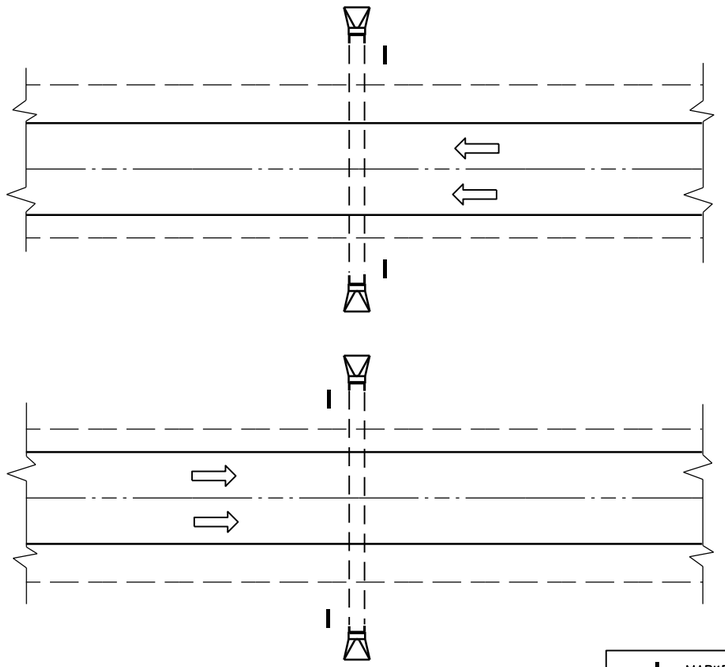

PLAN VIEW

DIVIDED HIGHWAY

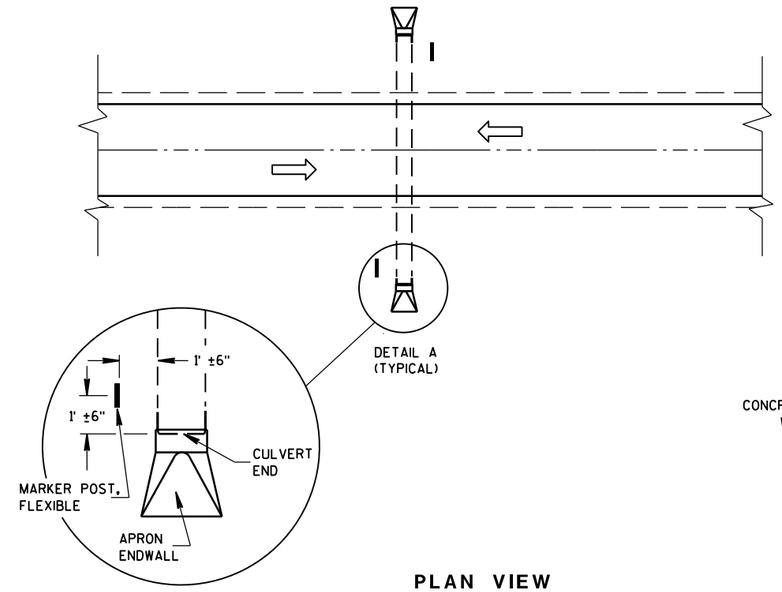

DETAIL A
(TYPICAL)

PLAN VIEW

UNDIVIDED HIGHWAY

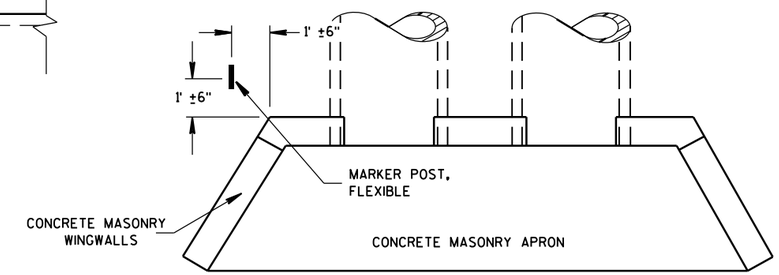

PLAN VIEW

CONCRETE MASONRY ENDWALLS FOR CULVERT PIPE AND PIPE ARCH

MARKER POST, FLEXIBLE

DIRECTION OF TRAFFIC FLOW

FLEXIBLE MARKER POST LOCATION

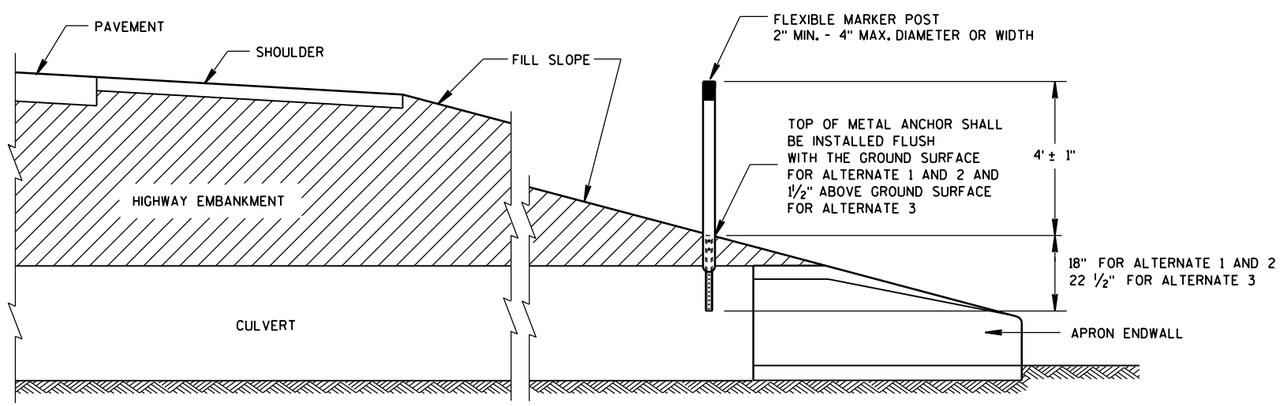

CROSS SECTION

FLEXIBLE MARKER POST

FLEXIBLE MARKER POST FOR CULVERT END

STATE OF WISCONSIN
DEPARTMENT OF TRANSPOR

6

6

S.D.D. 15 A 3-2a

S.D.D. 15 A 3-2a

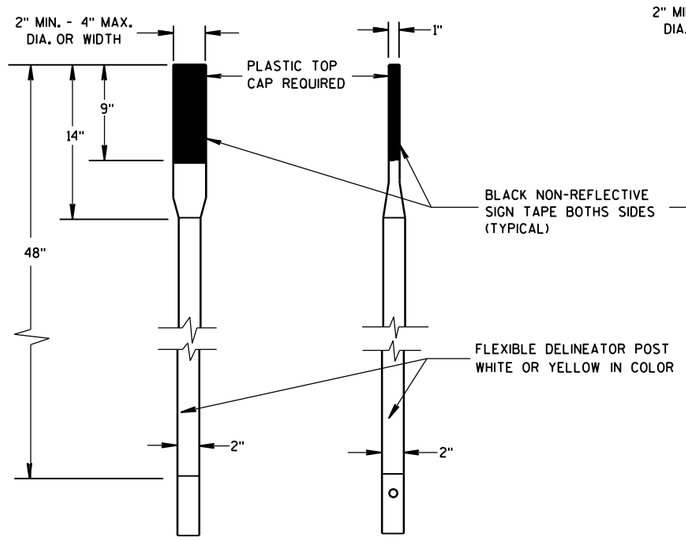

FRONT VIEW SIDE VIEW

ALTERNATE 1

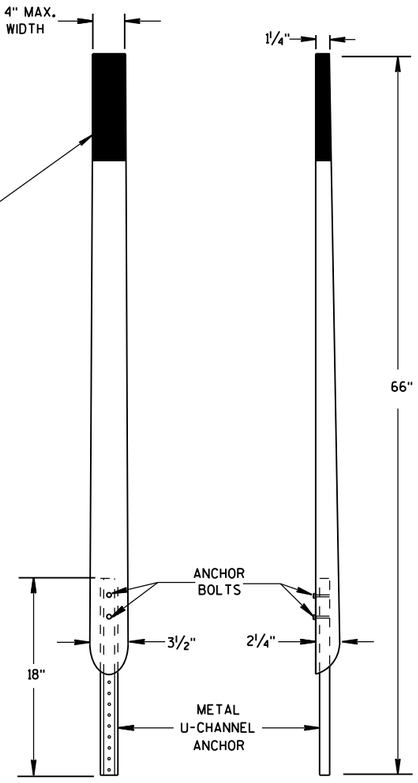

FRONT VIEW SIDE VIEW

ALTERNATE 2

FLEXIBLE MARKER POSTS

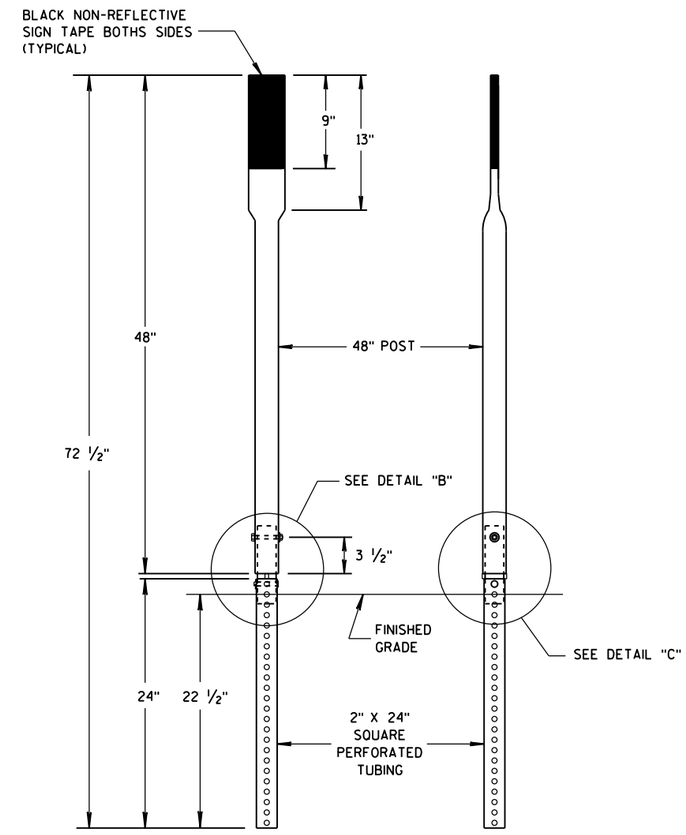

FRONT VIEW SIDE VIEW

ALTERNATE 3

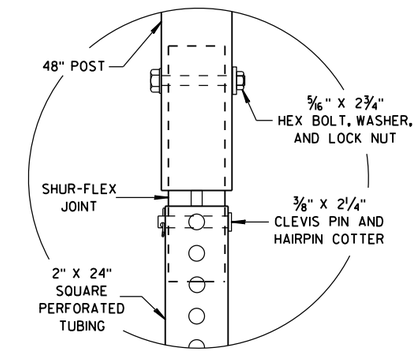

DETAIL B

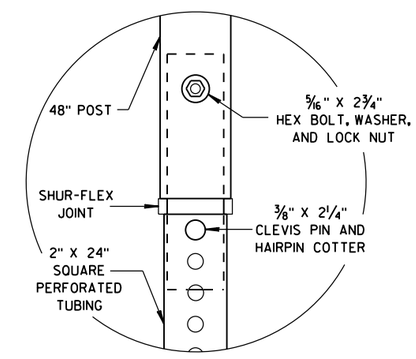

DETAIL C

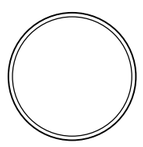

SECTION A-A

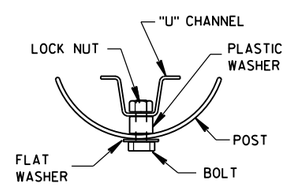

SECTION B-B

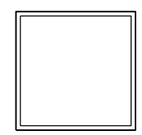

SECTION C-C

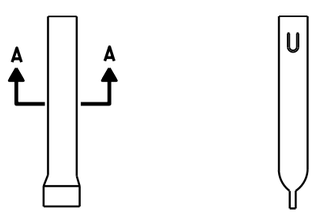

FRONT VIEW SIDE VIEW

ALTERNATE 1

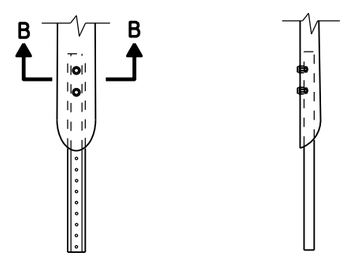

FRONT VIEW SIDE VIEW

ALTERNATE 2

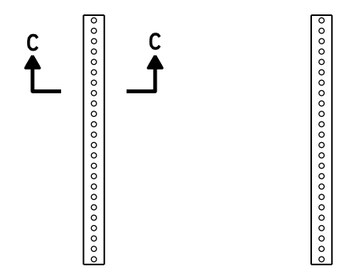

FRONT VIEW SIDE VIEW

ALTERNATE 3

FLEXIBLE MARKER POST ANCHORS

FLEXIBLE MARKER POST
FOR CULVERT END

STATE OF WISCONSIN
DEPARTMENT OF TRANSPORTATION

APPROVED
10/1/2012 /S/ Travis Feltes
DATE STATE TRAFFIC ENGINEER
FHWA

6

6

S.D.D. 15 A 3-2b

S.D.D. 15 A 3-2b

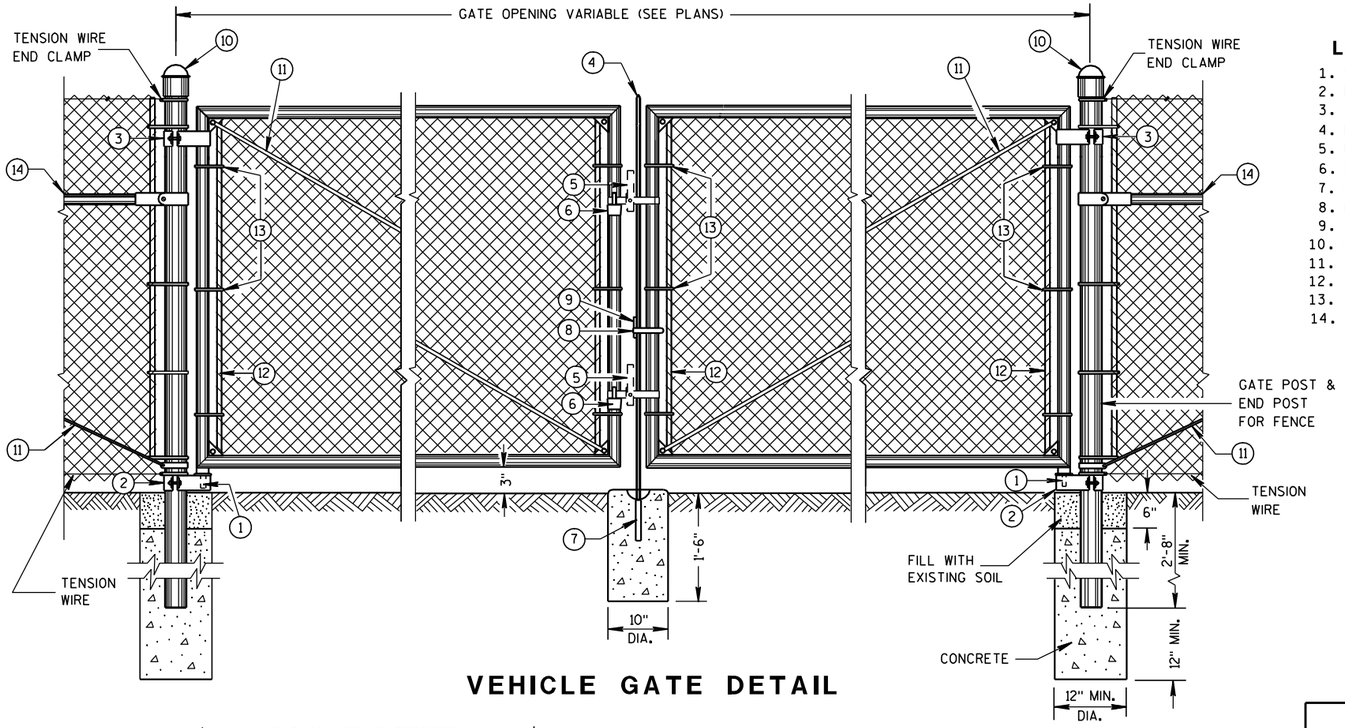

VEHICLE GATE DETAIL

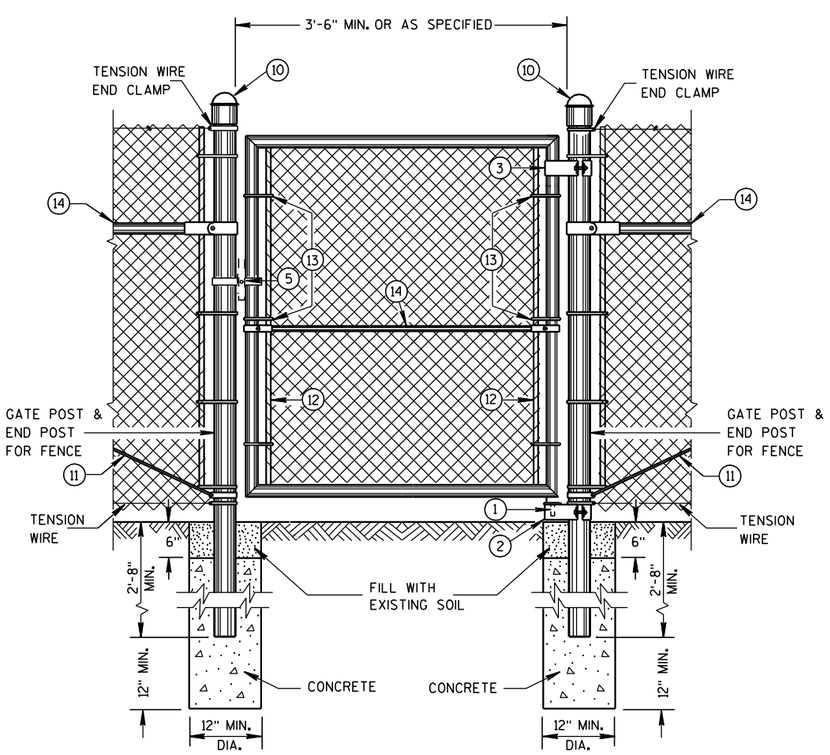

PEDESTRIAN GATE DETAIL

LEGEND

1. STRAIGHT PLUG
2. BOTTOM HINGE
3. TOP HINGE
4. PLUNGER ROD
5. FULCRUM LATCH
6. FORK CATCH *
7. PLUNGER ROD CATCH
8. LOCK KEEPER GUIDE
9. LOCK KEEPER
10. DOME TOPS
11. TRUSS RODS
12. TENSION BAR
13. TENSION BANDS
14. BRACE RAIL

*NOT REQUIRED ON SINGLE SWING PEDESTRIAN GATE

GENERAL NOTES

FENCE POSTS INSTALLED ON CONCRETE WALLS SHALL BE ANCHORED INTO EMBEDDED METAL SLEEVES OR CORED HOLE BY FILLING THE ANNULAR SPACE WITH PEA GRAVEL FOLLOWED BY AN EPOXY RESIN ADHESIVE. THE EPOXY RESIN ADHESIVE SHALL CONFORM TO THE REQUIREMENTS OF AASHTO M 235, CLASS A, B OR C.

USE FENCE FABRIC KNUCKLED AT BOTH SELVAGES.

FOR LEAF GATES GREATER THAN 8 FEET WIDE, INSTALL INTERIOR VERTICAL BRACE RAIL AT 8 FOOT INTERVALS.

FOR FABRIC HEIGHTS GREATER THAN 8 FEET, INSTALL INTERIOR HORIZONTAL BRACE RAILS TO LEAF GATE.

MAXIMUM SAG FOR OUTER GATE MEMBER SHALL NOT EXCEED THE GREATER OF 1% OF THE LEAF GATE WIDTH OR 2 INCHES.

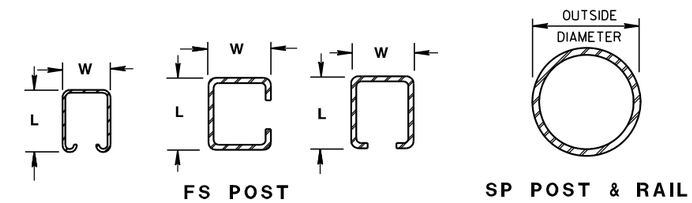

CROSS SECTIONS OF POSTS AND RAILS

SHAPE, SIZE AND WEIGHT REQUIREMENTS FOR FORMED STEEL FENCE POST

POST TYPE	LENGTH (L) INCH	WIDTH (W) INCH	WEIGHT LBS/FT
FS1	1.625	1.25	1.35
FS2†	1.875	1.625	1.850
FS2	1.875	1.625	2.400
FS3	2.250	1.700	2.780

SHAPE, SIZE AND WEIGHT REQUIREMENTS FOR ROUND STEEL FENCE POST

POST TYPE	OUTSIDE DIMENSION INCH	WALL THICKNESS INCH	WEIGHT LBS/FT
SP1	1.660	0.140	2.270
SP2	1.900	0.145	2.720
SP3	2.375	0.154	3.650
SP4	2.875	0.203	5.800
SP5	4.000	0.226	9.120
SP6	6.625	0.280	18.990
SP7	8.625	0.322	28.580

REQUIRED FENCE POST SIZES

USE	FABRIC HEIGHTS FEET	POST TYPE
TERMINAL POSTS **	LESS THAN OR EQUAL TO 6 FT.	SP3
	GREATER THAN OR EQUAL TO 6 FT.	SP4
LINE POSTS	LESS THAN OR EQUAL TO 6 FT.	SP2
	LESS THAN OR EQUAL TO 8 FT.	SP3
	GREATER THAN OR EQUAL TO 8 FT.	SP4
	LESS THAN OR EQUAL TO 8 FT.	FS2 OR FS2†
	GREATER THAN OR EQUAL TO 8 FT.	FS3

REQUIRED POST SIZE FOR GATES

USE	LEAF WIDTHS FEET	POST TYPE
GATES	LESS THAN OR EQUAL TO 6 FT.	SP4
	LESS THAN OR EQUAL TO 13 FT.	SP5
	LESS THAN OR EQUAL TO 18 FT.	SP6
	LESS THAN OR EQUAL TO 23 FT.	SP7

BRACE RAIL TYPES

USE		TYPE
BRACE RAIL		SP1 OR FS1

** INCLUDES END, CORNER, ANGLE, INTERSECTION AND INTERMEDIATE BRACED POSTS

FENCE CHAIN LINK

STATE OF WISCONSIN
DEPARTMENT OF TRANSPORTATION

6

S.D.D. 15 B 3-12a

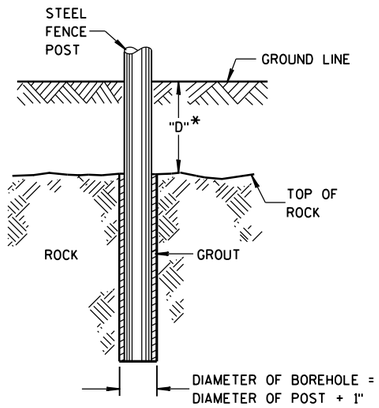

*IF "D" IS LESS THAN 2'-6", DRILL ROCK AND INSTALL GROUT

ROCK INSTALLATION OF LINE POST

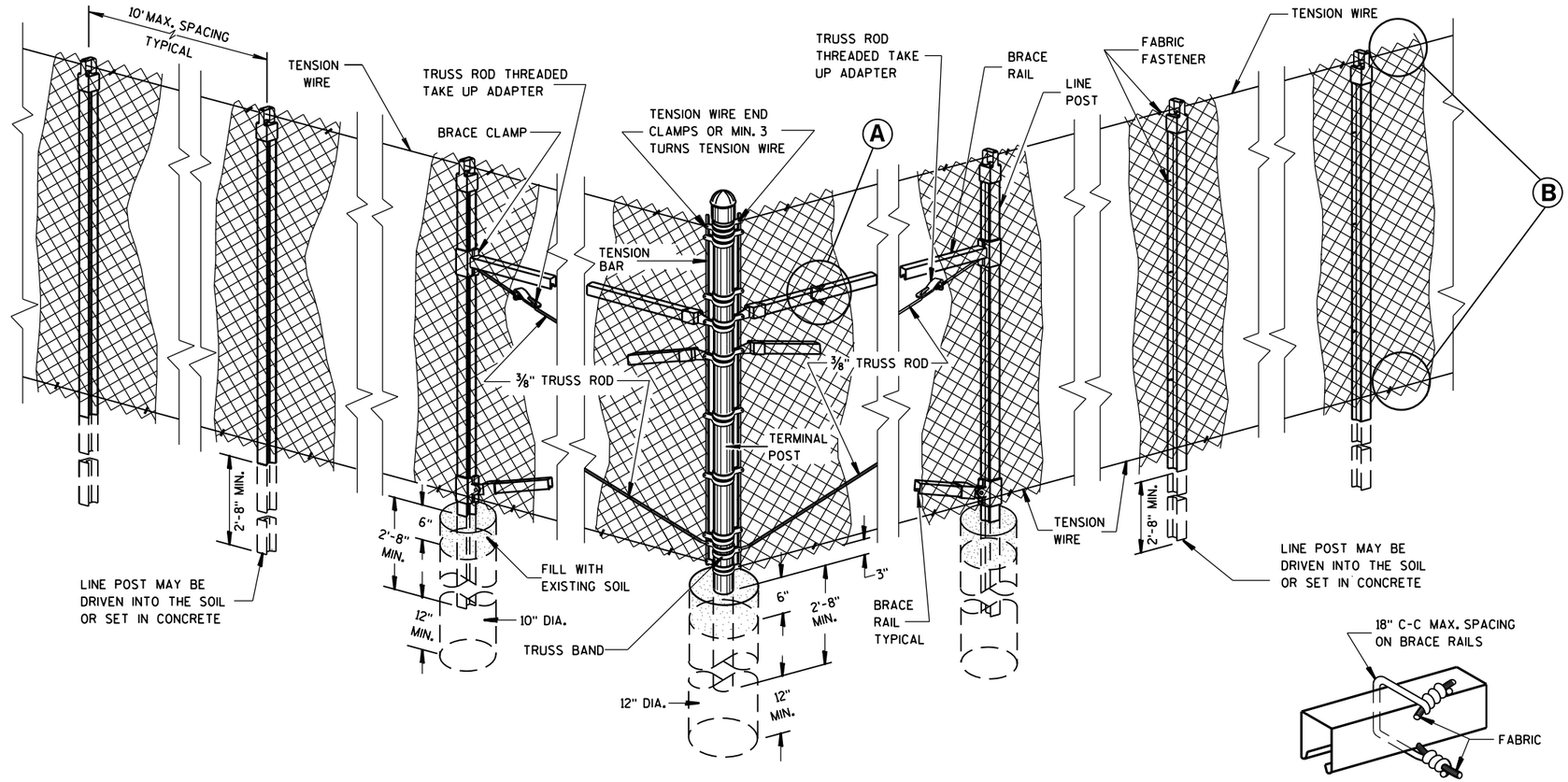

END, CORNER, ANGLE INTERSECTION & INTERMEDIATE BRACED POSTS

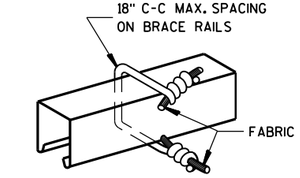

BRACE RAIL

FABRIC FASTENER

(A)

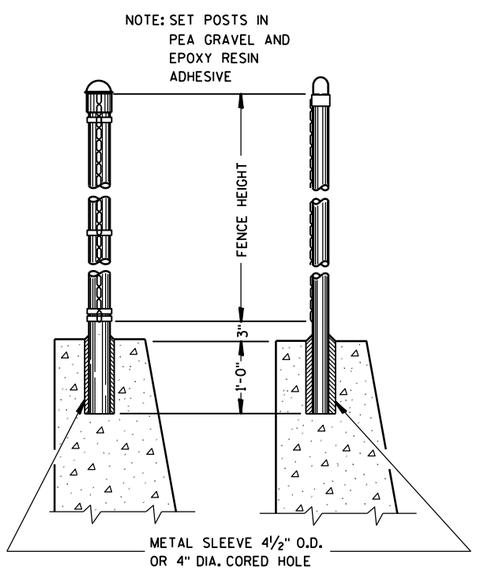

END POST & CORNER POST

LINE POST

DETAILS OF FENCE ON WALL

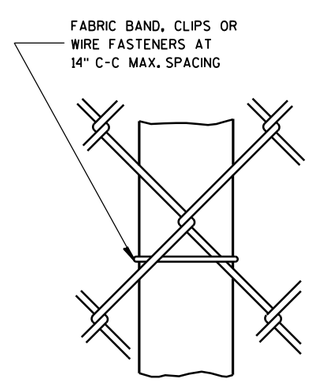

LINE POST

FABRIC FASTENER

AT TOP

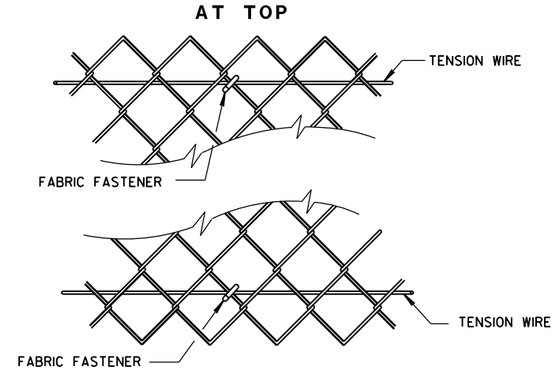

AT BOTTOM

SELVAGES

(B)

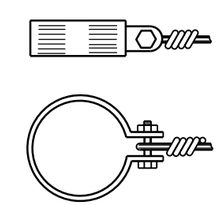

TENSION WIRE END CLAMP

FENCE CHAIN LINK

STATE OF WISCONSIN
DEPARTMENT OF TRANSPORTATION

APPROVED
3/19/2010
DATE
/S/ Jerry H. Zogg
ROADWAY STANDARDS DEVELOPMENT ENGINEER
FHWA

6

6

S.D.D. 15 B 3-12b

S.D.D. 15 B 3-12b

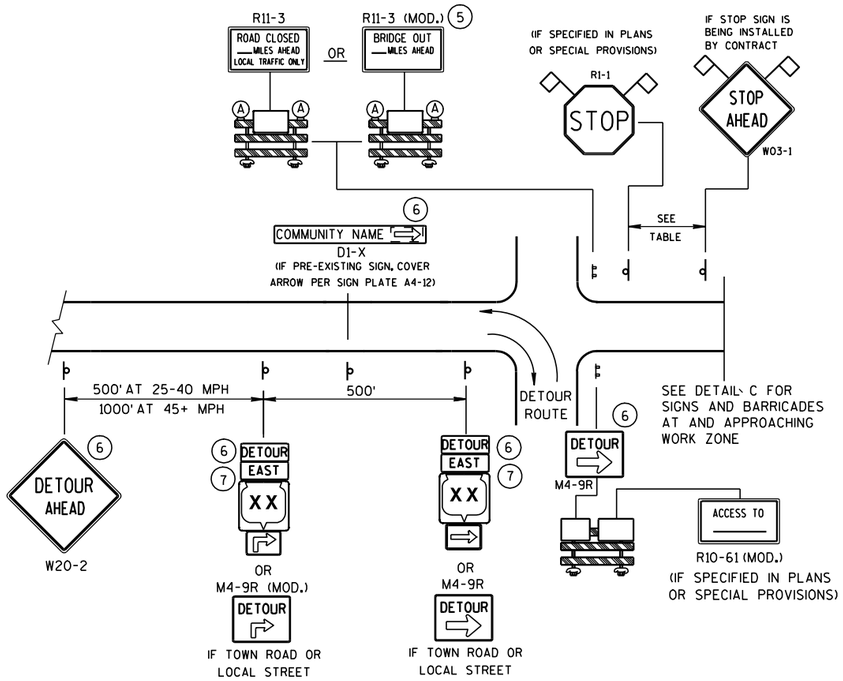

DETAIL A

MAINLINE CLOSURE WITH POSTED DETOUR

WORK ZONE GREATER THAN 1/2 MILE FROM DETOUR ROUTE (1000 FEET IF URBAN)

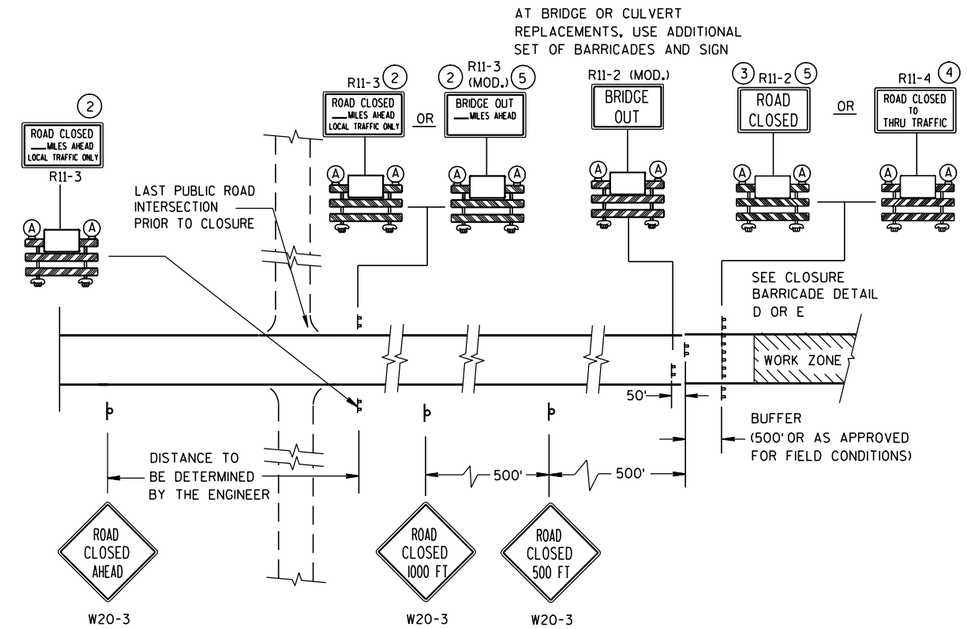

DETAIL C

MAINLINE CLOSURE, NO POSTED DETOUR

SPEED LIMIT (MPH)	"STOP AHEAD" ADVANCE WARNING DISTANCE (FT)
25	200
30	200
35	350
40	350
45	500
50	550
55	750

SEE SDD 15C2-4b FOR GENERAL NOTES AND FOOTNOTES 1 THROUGH 7

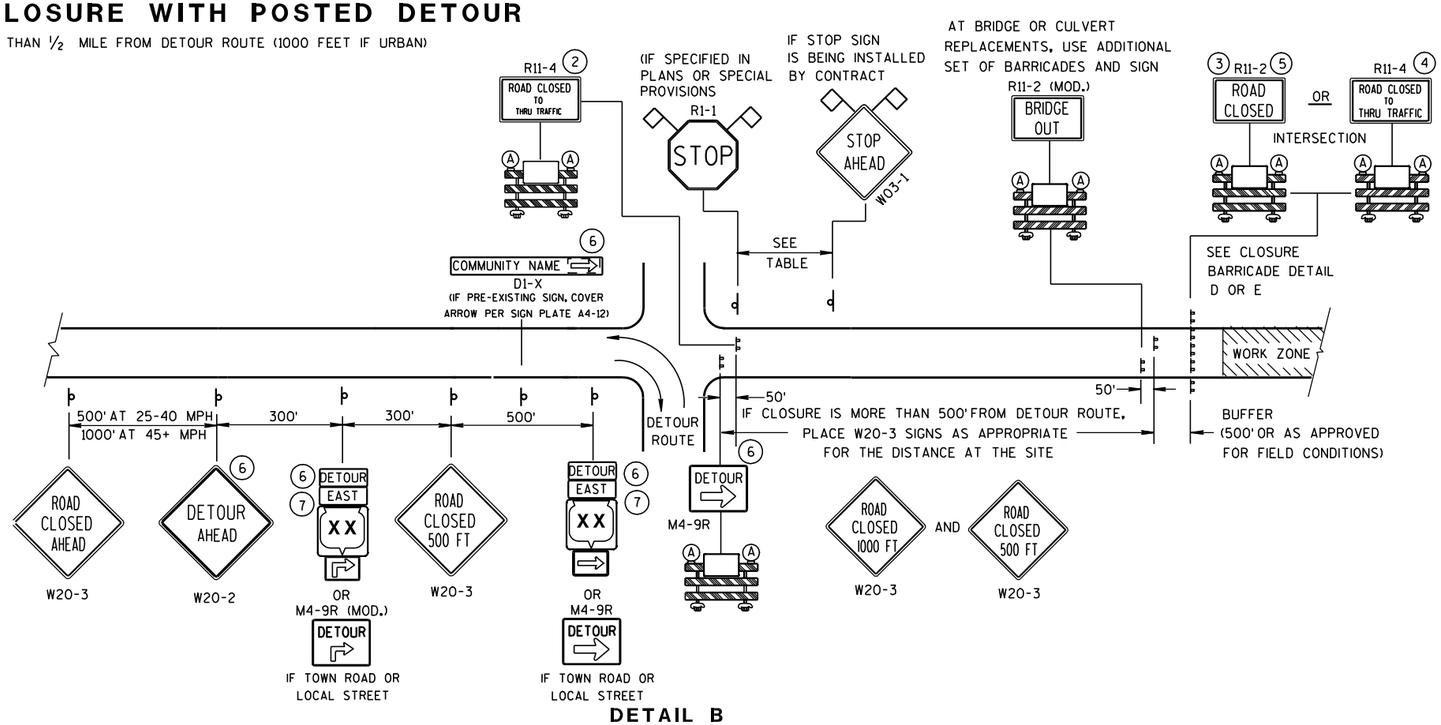

DETAIL B

MAINLINE CLOSURE WITH POSTED DETOUR

WORK ZONE LESS THAN 1/2 MILE FROM DETOUR ROUTE (1000 FEET IF URBAN)

LEGEND

- POST MOUNTED SIGN
- TYPE III BARRICADES
- TYPE "A" LOW INTENSITY FLASHING WARNING LIGHT (FOR NIGHT USE)
- WORK ZONE
- DETOUR / EAST — M4-8 / M3-X
- XX (M1-4) OR COUNTY XX (M1-5A) OR XX (M1-6)
- M05-1 OR M06-1
- FLAGS, 16" X 16" MIN., (ORANGE)

BARRICADES AND SIGNS FOR MAINLINE CLOSURES

STATE OF WISCONSIN
DEPARTMENT OF TRANSPORTATION

6

S.D.D. 15 C 2-4a

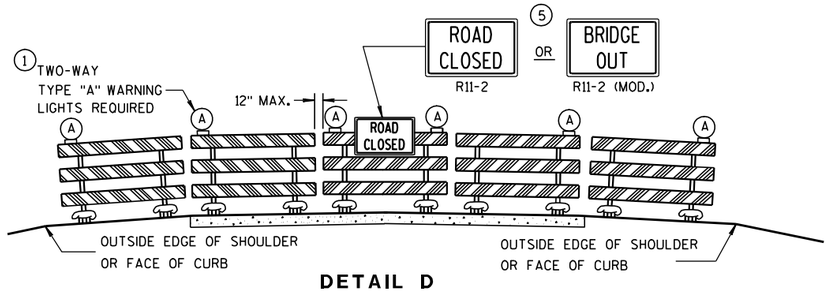

DETAIL D

ROAD CLOSURE BARRICADE DETAIL

APPROACH VIEW

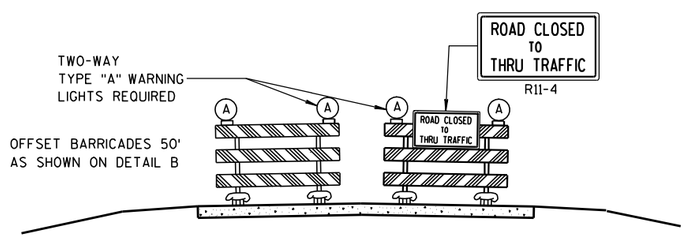

DETAIL E

LANE CLOSURE BARRICADE DETAIL

APPROACH VIEW

SEE SDD 15C2-4a FOR LEGEND

GENERAL NOTES

THE EXACT NUMBER, LOCATION, AND SPACING OF ALL SIGNS AND BARRICADES SHALL BE ADJUSTED TO FIT FIELD CONDITIONS AS APPROVED BY THE ENGINEER.

ANY SIGNS TEMPORARY OR EXISTING, WHICH CONFLICT WITH TRAFFIC CONTROL "IN USE" SHALL BE REMOVED OR COVERED AS NEEDED AND AS APPROVED BY THE ENGINEER.

THE SPACING BETWEEN TRAFFIC CONTROL SIGNS SHOULD BE ADJUSTED TO NOT CONFLICT WITH AND SHOULD PROVIDE A DESIRABLE MINIMUM OF 200 FEET CLEARANCE TO EXISTING SIGNS THAT WILL REMAIN IN PLACE.

BARRICADES THAT MUST BE MOVED FOR A WORK OPERATION SHALL BE IMMEDIATELY RE-ESTABLISHED UPON COMPLETION OF THE OPERATION OR, FOR CONTINUING OPERATIONS, AT THE END OF EACH WORKING DAY.

SIGNS THAT WILL BE IN PLACE LESS THAN 7 CONTINUOUS DAYS AND NIGHTS MAY BE MOUNTED ON PORTABLE SUPPORTS.

ALL TYPE III BARRICADES SHALL HAVE RAILS REFLECTORIZED ON BOTH FACES. STRIPES SHALL BE PROPERLY SLOPED DOWN TOWARD THE TRAFFIC SIDE OR AS SHOWN IN THE ROAD CLOSURE BARRICADE DETAIL D FOR FULL ROAD CLOSURES.

TYPE "A" LOW-INTENSITY FLASHING WARNING LIGHTS SHALL BE VISIBLE ON BOTH SIDES OF THE BARRICADE.

THE R11-2, R11-3, M4-9, R11-4 AND R10-61 SIGNS PLACED ON BARRICADES SHALL COVER NO MORE THAN THE TOP RAIL. THE SIGNS SHALL NOT COVER ANY PORTION OF THE MIDDLE OR BOTTOM RAILS.

THE REFLECTIVE SHEETING USED ON R11-2, R11-3, R11-4, R10-61 AND R1-1 SIGNS SHALL COMPLY WITH SUBSECTION 637.2.2.2 OF THE STANDARD SPECIFICATIONS.

"WO AND "MO" SIGNS ARE THE SAME AS "W" AND "M" SIGNS EXCEPT THE BACKGROUND IS ORANGE.

ALL SIGNS SHALL BE 48" X 48" UNLESS OTHERWISE NOTED BELOW:

- R11-2 SHALL BE 48" X 30".
- R11-3, R11-4 AND R10-61 SHALL BE 60" X 30".
- M4-9 SHALL BE 30" X 24".
- M3-X AND M4-8 SHALL BE 24" X 12". (30" X 15" IF NEEDED TO MATCH EXISTING SIGNS.)
- M1-4, M1-5A, AND M1-6 SHALL BE 24" X 24". (36" X 36" IF NEEDED TO MATCH EXISTING SIGNS.)
- M05-1 AND M06-1 SHALL BE 21" X 21". (30" X 30" IF NEEDED TO MATCH EXISTING SIGNS.)
- D1-X SHALL BE AS SHOWN ON SPECIFIC PROJECT SIGNING DETAIL SHEETS.
- R1-1 SHALL BE 36" X 36".

(1) TWO WARNING LIGHTS SHALL BE PROVIDED ON THE CENTER BARRICADE AND A MINIMUM OF ONE WARNING LIGHT SHALL BE PROVIDED ON EACH OF THE OTHER BARRICADES WITHIN THE ROADWAY LIMITS. SPACING OF THE WARNING LIGHTS SHALL BE UNIFORM TO THE EDGE OF ROADWAY AS SHOWN (APPROX. 8-FOOT LIGHT SPACING).

(2) THESE SIGNS AND BARRICADES ARE NOT REQUIRED IF ROAD CLOSURE BEGINS AT INTERSECTION.

(3) FOR ROAD CLOSURE WITHOUT LOCAL ACCESS TO PROJECT, SEE ROAD CLOSURE BARRICADE DETAIL D.

(4) FOR ROAD CLOSURE WITH LOCAL ACCESS TO PROJECT, SEE LANE CLOSURE BARRICADE DETAIL E.

(5) FOR BRIDGE OR CULVERT REPLACEMENTS, SUBSTITUTE "BRIDGE OUT" INSTEAD OF "ROAD CLOSED" ON R11-2 AND R11-3 SIGNS.

(6) INSTALL DETOUR AND COMMUNITY GUIDE SIGNS AND ARROWS ONLY IF SPECIFIED IN THE CONTRACT. IF THERE ARE EXISTING ROUTE MARKER ASSEMBLIES THAT WILL REMAIN IN PLACE, ADJUST THE LOCATION OF THE DETOUR ROUTE SIGNS TO CORRESPOND WITH THE EXISTING ASSEMBLIES. MODIFY EXISTING SIGNS WHERE POSSIBLE. SEE SPECIFIC PROJECT DETOUR SIGNING DETAIL SHEETS. IF DETOUR SIGNS ARE BEING INSTALLED BY OTHERS, PLACE THE CONTRACTED TRAFFIC CONTROL SIGNS TO ALLOW FOR PLACEMENT OF ALL WARNING, DETOUR AND GUIDE SIGNS AS SHOWN.

(7) "EAST" CARDINAL DIRECTION MARKERS AND RIGHT TURN ARROWS ARE SHOWN. USE OTHER CARDINAL DIRECTIONS AND ARROWS AS APPROPRIATE.

BARRICADES AND SIGNS FOR MAINLINE CLOSURES

STATE OF WISCONSIN
DEPARTMENT OF TRANSPORTATION

APPROVED

9/16/03 — DATE

/S/ Thomas N. N[illegible] — CHIEF SIGNS AND MAR[illegible]INEER

FHWA

THIS DRAWING PROVIDES GENERAL GUIDANCE ON TYPICAL DETOUR SIGN LAYOUT AND SPACING. SEE PROJECT DETOUR SIGNING SHEETS FOR SPECIFIC DETAILS FOR EACH PROJECT.

GENERAL NOTES

THE EXACT NUMBER, LOCATION AND SPACING OF ALL SIGNS SHALL BE ADJUSTED TO FIT FIELD CONDITIONS AS APPROVED BY THE ENGINEER.

IF THERE ARE EXISTING ROUTE MARKER ASSEMBLIES THAT WILL REMAIN IN PLACE, ADJUST THE LOCATION OF THE DETOUR ROUTE SIGNS TO CORRESPOND WITH THE EXISTING ASSEMBLIES. SEE SPECIFIC PROJECT DETOUR SIGNING DETAIL SHEETS. MODIFY EXISTING SIGNS WHERE POSSIBLE.

THE SPACING BETWEEN TRAFFIC CONTROL AND DETOUR SIGNS SHOULD BE ADJUSTED TO NOT CONFLICT WITH AND TO PROVIDE A DESIRABLE MINIMUM OF 200 FEET CLEARANCE TO EXISTING SIGNS THAT WILL REMAIN IN PLACE.

ANY SIGNS TEMPORARY OR EXISTING, WHICH CONFLICT WITH TRAFFIC CONTROL "IN USE", SHALL BE REMOVED OR COVERED AS NEEDED AND AS APPROVED BY THE ENGINEER.

SIGNS THAT WILL BE IN PLACE LESS THAN 7 CONTINUOUS DAYS AND NIGHTS MAY BE MOUNTED ON PORTABLE SUPPORTS.

"MO" SIGNS ARE THE SAME AS "M" SIGNS EXCEPT THE BACKGROUND IS ORANGE.

SIGN SIZES SHALL BE AS FOLLOWS:

- M3-X AND M4-8 SHALL BE 24" X 12". (30" X 15" IF NEEDED TO MATCH EXISTING SIGNS.)
- M1-4, M1-5A, AND M1-6 SHALL BE 24" X 24". (36" X 36" IF NEEDED TO MATCH EXISTING SIGNS.)
- M05-1 AND M06-1 SHALL BE 21" X 21". (30" X 30" IF NEEDED TO MATCH EXISTING SIGNS.)
- M4-9 SHALL BE 30" X 24".
- M4-8a SHALL BE 24" X 18".
- G20-51 SHALL BE 60" X 24".
- W20-2 SHALL BE 48" X 48".
- D1-X SHALL BE AS SHOWN ON SPECIFIC PROJECT SIGNING DETAIL SHEETS.

* OPTIONAL SIGNS. SEE SPECIFIC PROJECT DETOUR SIGNING DETAIL SHEETS.

** FOR A TOWN ROAD OR LOCAL STREET DETOURED ONTO A STATE TRUNK HIGHWAY, PLACE A ROAD NAME PLAQUE ABOVE THE M4-9 SIGN AS SPECIFIED IN THE CONTRACT.

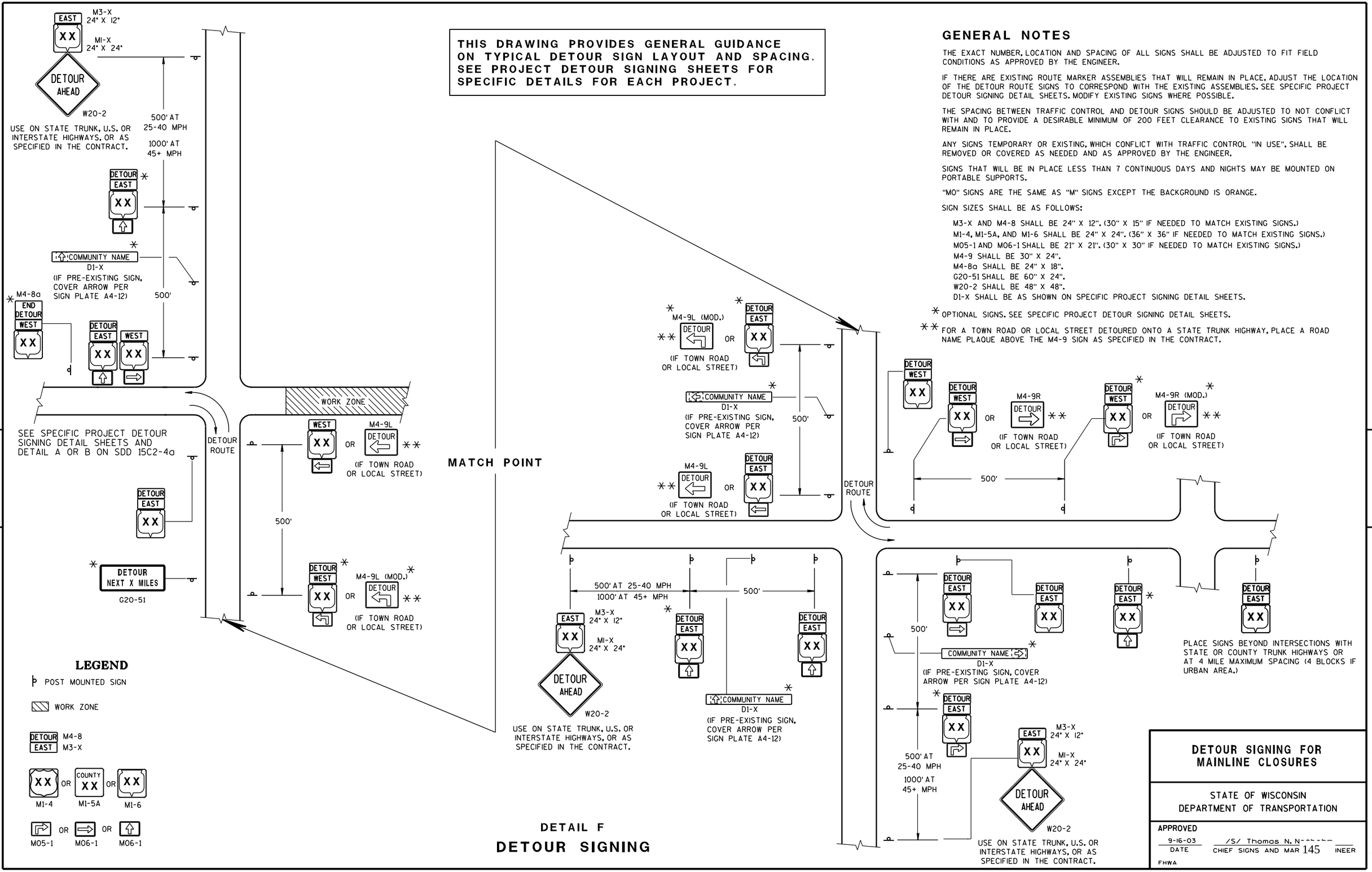

DETAIL F

DETOUR SIGNING

DETOUR SIGNING FOR MAINLINE CLOSURES

STATE OF WISCONSIN
DEPARTMENT OF TRANSPORTATION

APPROVED

9-16-03 — DATE

/S/ Thomas N. N[illegible] — CHIEF SIGNS AND MAR[illegible]INEER

FHWA

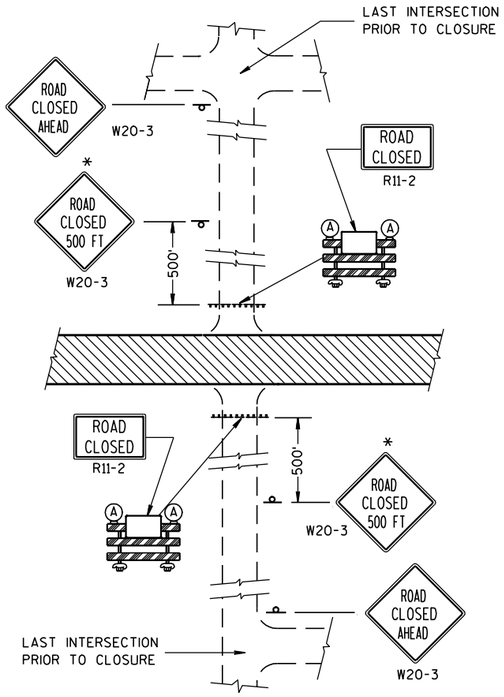

DETAIL 1

(NO ACCESS TO PROJECT)

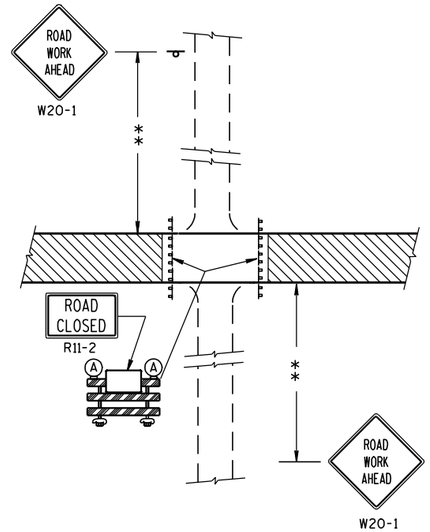

DETAIL 2

(PUBLIC CROSS-TRAFFIC MAINTAINED. NO ACCESS TO PROJECT).

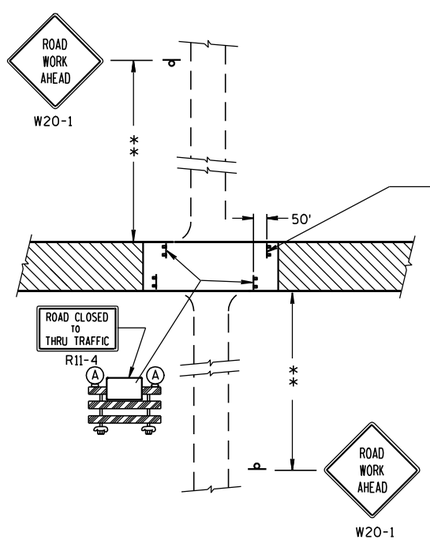

FOR BRIDGE OR CULVERT REPLACEMENT, USE ADDITIONAL SIGN ON BARRICADE

BRIDGE OUT
XX MILES AHEAD
R11-3 (MOD.)

DETAIL 3

(PUBLIC CROSS-TRAFFIC MAINTAINED. CONTRACTOR, LOCAL BUSINESS AND RESIDENT ACCESS).

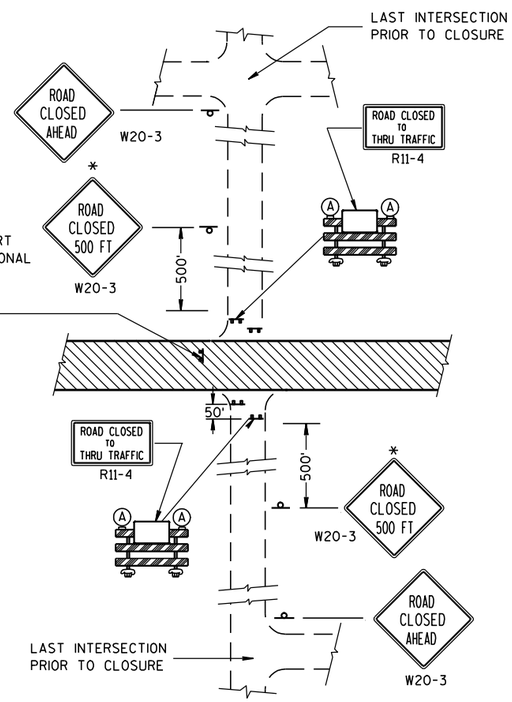

DETAIL 4

(CONTRACTOR, LOCAL BUSINESS AND RESIDENT ACCESS TO PROJECT)

GENERAL NOTES

THE EXACT NUMBER, LOCATION, AND SPACING OF ALL SIGNS AND BARRICADES SHALL BE ADJUSTED TO FIT FIELD CONDITIONS AS APPROVED BY THE ENGINEER.

ANY SIGNS TEMPORARY OR EXISTING, WHICH CONFLICT WITH TRAFFIC CONTROL "IN USE" SHALL BE REMOVED OR COVERED AS NEEDED AND AS APPROVED BY THE ENGINEER.

THE SPACING BETWEEN TRAFFIC CONTROL SIGNS SHOULD BE ADJUSTED TO NOT CONFLICT WITH AND SHOULD PROVIDE A DESIRABLE MINIMUM OF 200 FEET CLEARANCE TO EXISTING SIGNS THAT WILL REMAIN IN PLACE.

IF A "STOP" SIGN MUST BE REMOVED FOR A WORK OPERATION, A TEMPORARY "STOP" SIGN SHALL BE PLACED PRIOR TO THE SIGN REMOVAL, OR A FLAGGER SHALL BE PROVIDED UNTIL THE SIGN IS RE-ESTABLISHED.

BARRICADES THAT MUST BE MOVED FOR A WORK OPERATION SHALL BE IMMEDIATELY RE-ESTABLISHED UPON COMPLETION OF THE OPERATION OR, FOR CONTINUING OPERATIONS, AT THE END OF EACH WORKING DAY.

SIGNS THAT WILL BE IN PLACE LESS THAN 7 CONTINUOUS DAYS AND NIGHTS MAY BE MOUNTED ON PORTABLE SUPPORTS.

ALL TYPE III BARRICADES SHALL HAVE RAILS REFLECTORIZED ON BOTH FACES. STRIPES SHALL BE PROPERLY SLOPED DOWN TOWARD THE TRAFFIC SIDE OR AS SHOWN IN THE ROAD CLOSURE BARRICADE DETAIL D FOR FULL ROAD CLOSURES.

TYPE "A" LOW-INTENSITY FLASHING WARNING LIGHTS SHALL BE VISIBLE ON BOTH SIDES OF THE BARRICADE.

THE R11-2, R11-3 AND R11-4 SIGNS PLACED ON BARRICADES SHALL COVER NO MORE THAN THE TOP RAIL. THE SIGNS SHALL NOT COVER ANY PORTION OF THE MIDDLE OR BOTTOM RAILS.

THE REFLECTIVE SHEETING USED ON R11-2, R11-3 AND R11-4 SIGNS SHALL COMPLY WITH SUBSECTION 637.2.2.2 OF THE STANDARD SPECIFICATIONS.

ALL SIGNS SHALL BE 48" X 48" UNLESS OTHERWISE NOTED BELOW:
R11-2 SHALL BE 48" X 30".
R11-4 AND R11-3 SHALL BE 60" X 30".

*OMIT THE "ROAD CLOSED 500 FT." SIGN IF THE LAST INTERSECTION IS 500 FT. OR LESS FROM THE WORK ZONE.

**500' MAX. OR AT LAST INTERSECTION WHICHEVER IS CLOSER.

LEGEND

- POST MOUNTED WARNING SIGN
- TYPE III BARRICADES
- (A) TYPE "A" LOW INTENSITY FLASHING WARNING LIGHT (FOR NIGHT USE)
- WORK AREA

BARRICADES AND SIGNS FOR SIDEROAD CLOSURES

STATE OF WISCONSIN
DEPARTMENT OF TRANSPORTATION

APPROVED
9-16-03 — DATE
/S/ Thomas N. N[illegible] — CHIEF SIGNS AND MAR[illegible] INEER
FHWA

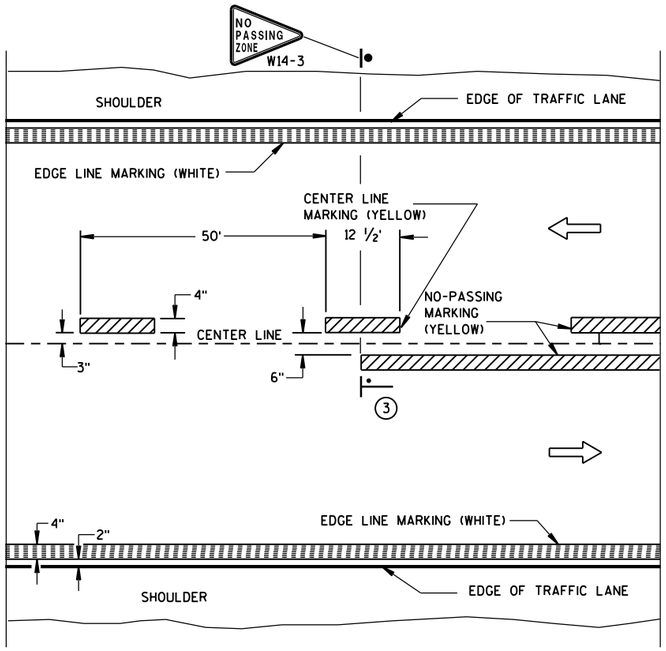

TWO WAY TRAFFIC

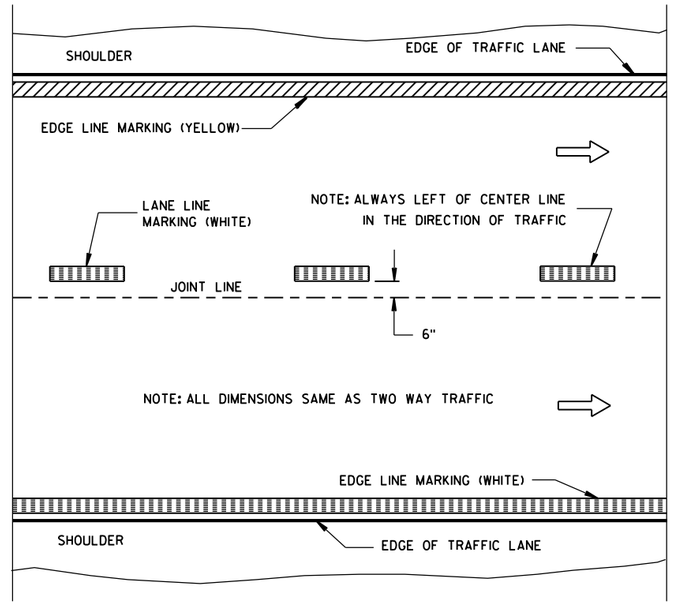

ONE WAY TRAFFIC

PERMANENT PAVEMENT MARKING

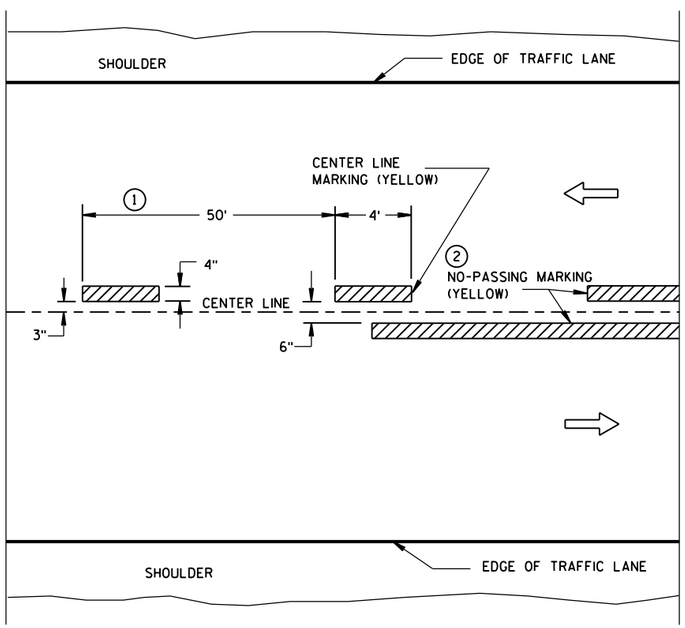

TWO WAY TRAFFIC

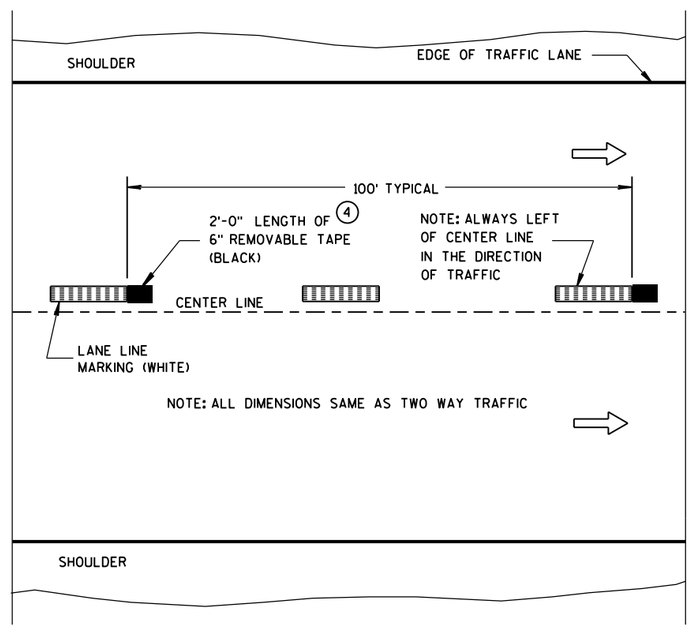

ONE WAY TRAFFIC

TEMPORARY (INTERMEDIATE) PAVEMENT MARKING

(SHOWS CYCLE FOR TEMPORARY CENTER LINE OR TEMPORARY LANE LINE MARKING)

GENERAL NOTES

DETAILS OF CONSTRUCTION NOT SHOWN ON THIS DRAWING SHALL CONFORM TO STANDARD SPECIFICATIONS AND SPECIAL PROVISIONS.

1. HALF CYCLE LENGTHS (25'±) WITH 2' MINIMUM STRIPE LENGTHS SHALL BE PROVIDED ON ROADWAYS (INCLUDING TEMPORARY TRAVELED WAYS) WITH REVERSE CURVATURE, CURVATURE OF OVER 5 DEGREES OR WHEN DIRECTED BY THE ENGINEER TO MARK UNUSUAL ALIGNMENT OF THE TRAVELED WAY.
2. NO PASSING ZONE TEMPORARY PAVEMENT MARKING IS REQUIRED TO BE PLACED, WHERE APPROPRIATE, ALONG WITH CENTERLINE TEMPORARY PAVEMENT MARKING WHEN A SAME DAY PERMANENT PAVEMENT MARKING ITEM IS INCLUDED IN THE CONTRACT.
3. NO PASSING ZONE MARKINGS ARE PLACED ACCORDING TO "T" MARKINGS. IF EXISTING NO PASSING ZONE W14-3 SIGNS ARE BEYOND 50 FEET IN EITHER DIRECTION, THE SIGNS SHALL BE MOVED TO THE "T" MARKINGS.
4. CONCRETE ONLY.

NOTE

ARROW SYMBOL (⇨) SHOWS DIRECTION OF TRAVEL

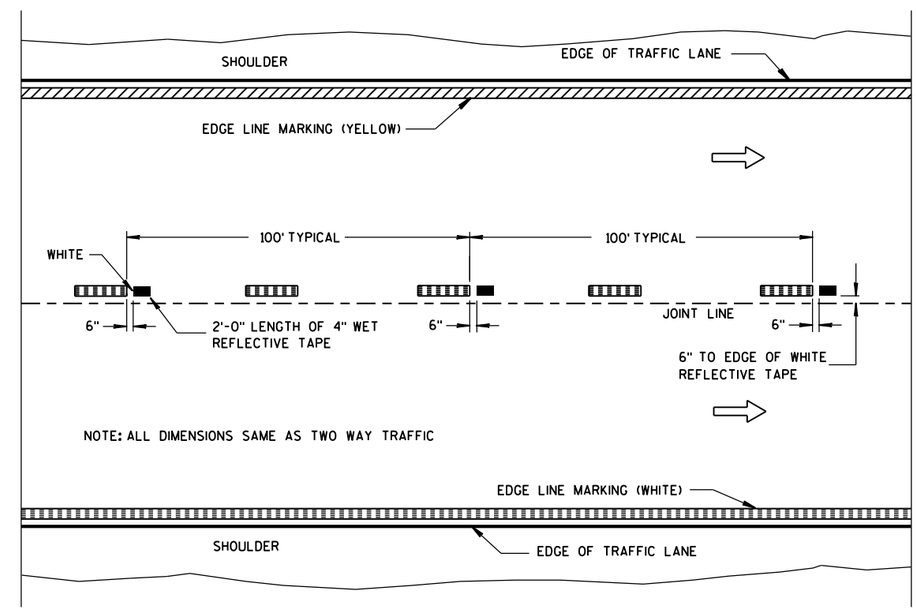

WET REFLECTIVE TAPE SUPPLEMENT TO SPRAYED OR NON WET REFLECTIVE TAPE LANE LINE

LEGEND

"T" MARKING

POST MOUNTED SIGN

PAVEMENT MARKING (MAINLINE)

STATE OF WISCONSIN
DEPARTMENT OF TRANSPORTATION

APPROVED
10-1-2012 /S/ Travis Feltes
DATE STATE TRAFFIC ENGINEER
FHWA

6

S.D.D. 15 C 8-15a

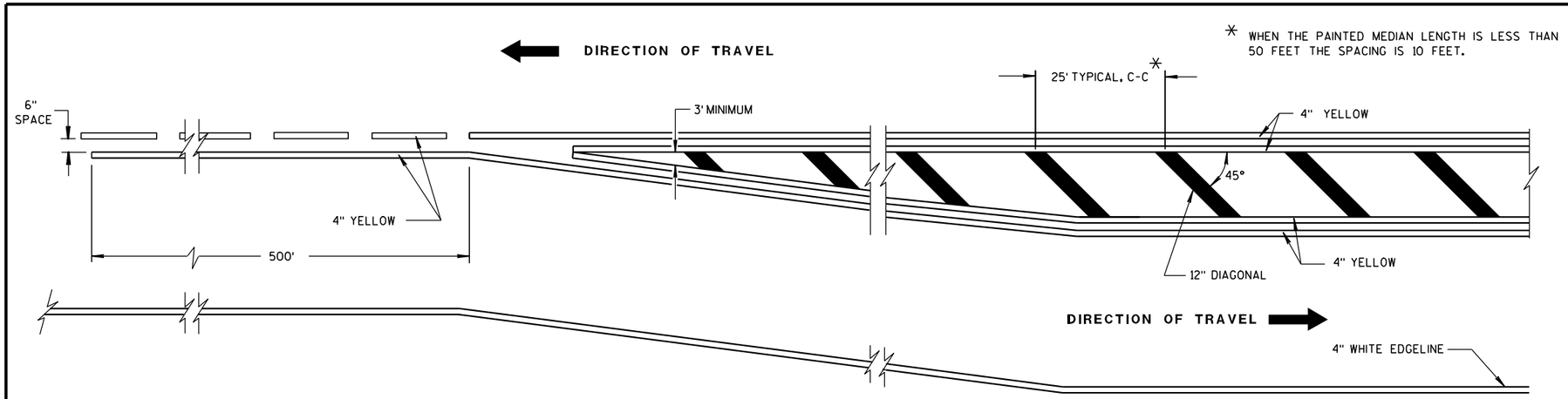

MEDIAN ISLAND DETAIL

GENERAL NOTE

DIAGONALS ARE OPTIONAL WHEN PAINTED ISLAND IS LESS THAN 6 FEET AT WIDEST POINT.

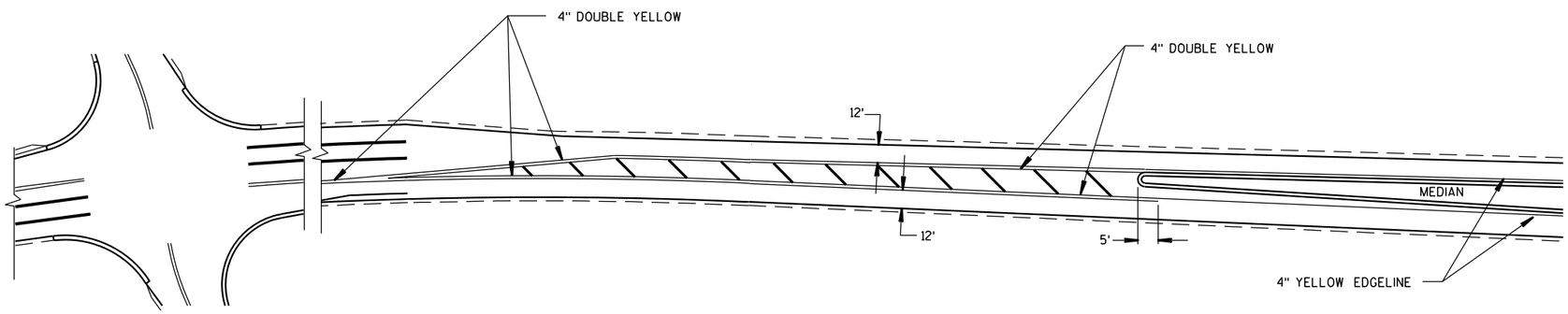

APPROACH MARKINGS FOR OTHER MEDIAN TYPES

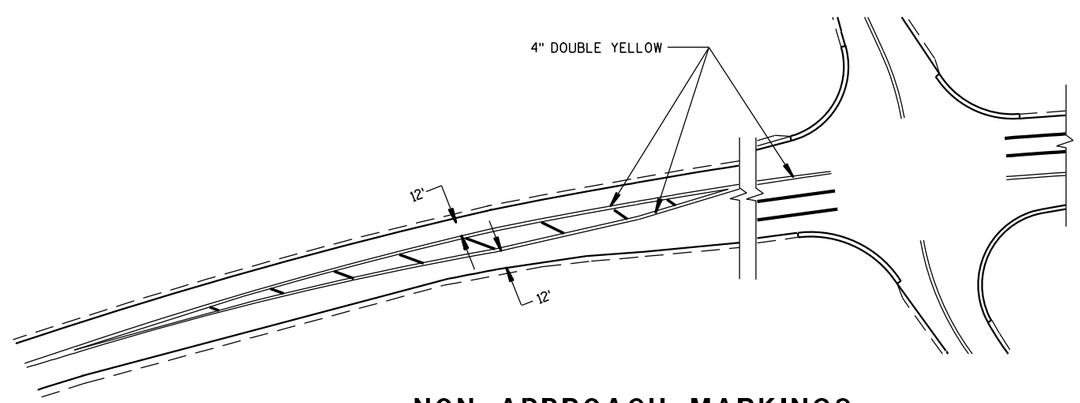

NON APPROACH MARKINGS

6

6

S.D.D. 15 C 18-3

S.D.D. 15 C 18-3

MEDIAN ISLAND MARKING

STATE OF WISCONSIN
DEPARTMENT OF TRANSPORTATION

APPROVED

2-5-09	/S/ Thomas N. Nothohm
DATE	STATE TRAFFIC ENGINEER

FHWA

IGN

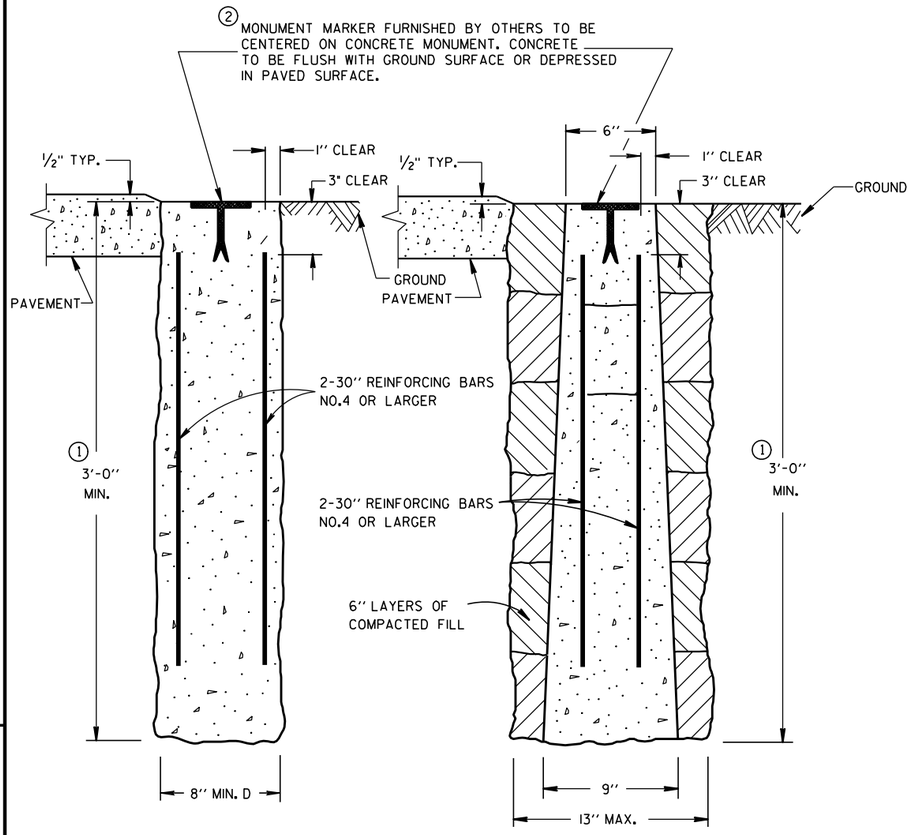

CAST-IN-PLACE PRECAST

CONCRETE MONUMENTS

TYPE A

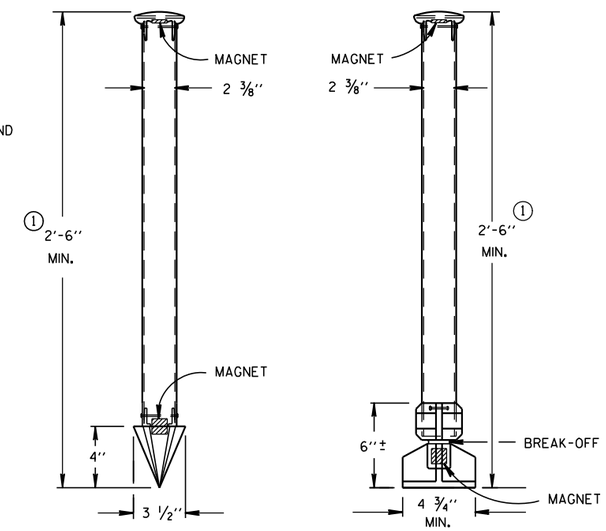

TYPE C TYPE D

DRIVE-IN MONUMENT BREAK-OFF MONUMENT

ALUMINUM MONUMENTS

(INCLUDES MARKER)

GENERAL NOTES

DETAILS OF CONSTRUCTION, MATERIALS AND WORKMANSHIP NOT SHOWN ON THIS DRAWING SHALL CONFORM TO THE PERTINENT REQUIREMENTS OF THE STANDARD SPECIFICATIONS AND THE APPLICABLE SPECIAL PROVISIONS.

DETAILED DRAWINGS OF PROPOSED ALTERNATE DESIGNS FOR METAL MONUMENTS OR MONUMENT COVERS SHALL BE SUBMITTED TO THE ENGINEER FOR APPROVAL.

INSTALLED METAL MONUMENTS MUST BE EASILY DETECTED WITH A DIP NEEDLE. INSERT PERMANENT MAGNETS SHALL BE ATTACHED NEAR THE TOP AND BOTTOM OF THOSE MONUMENTS CONSTRUCTED OF A METAL ALLOY WHICH IS NOT ATTRACTIVE TO A DIP NEEDLE.

THE CAST IRON MONUMENT COVER SHALL BE A "NON-ROCKING" TYPE. ADJUSTMENT OF THE COVER TO GRADE MAY BE ACCOMPLISHED BY THE USE OF MORTAR AND BRICK, OR BY EITHER PRECAST OR CAST-IN-PLACE REINFORCED CONCRETE GRADE RINGS.

MONUMENTS SHALL BE LOCATED AND PLACED AT THE DIRECTION OF THE ENGINEER.

ALUMINUM MONUMENTS AND MONUMENT COVERS SHALL BE MADE FROM AN ALUMINUM AND MAGNESIUM ALLOY AS DETERMINED BY THE MANUFACTURER.

THE MONUMENT COVERS DETAILED ON THIS DRAWING ARE NOT EQUAL ALTERNATES. MONUMENT COVERS SHALL BE CAST IRON UNLESS ALUMINUM IS SPECIFIED ELSEWHERE IN THE CONTRACT.

MONUMENT SHALL BE CAST-IN-PLACE CONCRETE UNLESS PRECAST CONCRETE OR ALUMINUM MONUMENTS ARE SPECIFIED IN THE CONTRACT OR PERMITTED BY THE ENGINEER.

① MINIMUM LENGTH SHALL BE 4'-0" FOR MONUMENTS INSTALLED IN PAVED AREAS.

② AN OFFICIAL COUNTY MONUMENT MARKER SUPPLIED BY A COUNTY MAY BE REQUIRED FOR SOME SECTION CORNERS AND WITNESS MONUMENTS INSTEAD OF THIS WIS DOT MARKER.

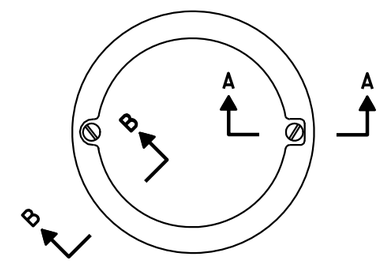

TOP VIEW

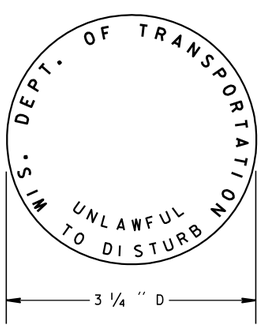

② WIS DOT MONUMENT MARKER LOGO

FOR TYPES "A", "C" & "D"

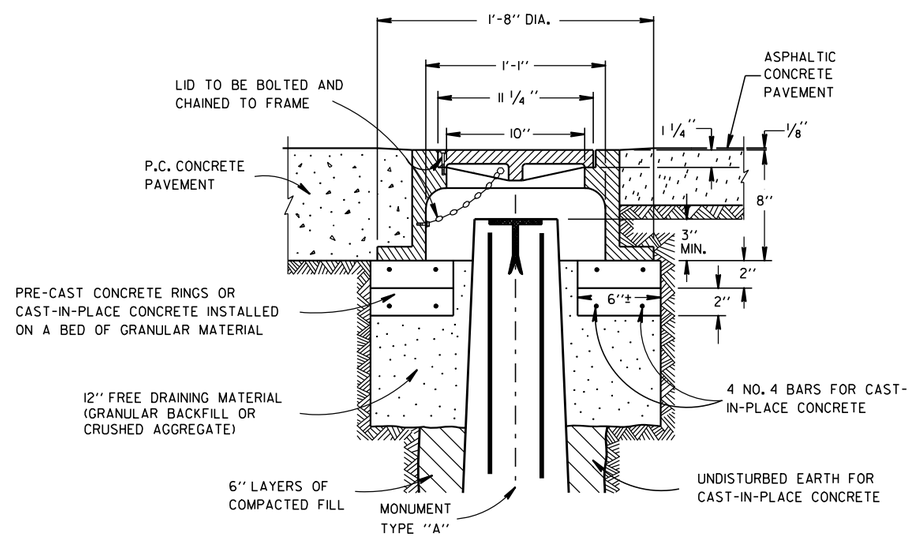

CAST IRON MONUMENT COVER

(APPROXIMATE WEIGHT - 95 LBS.)

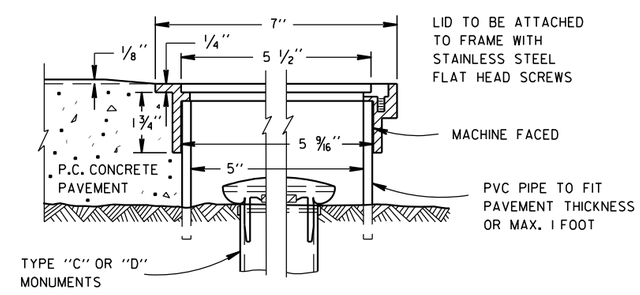

SECTION B-B SECTION A-A

ALUMINUM MONUMENT COVER

(APPROXIMATE WEIGHT 2 LBS)

(FOR CONCRETE PAVEMENT ONLY)

LANDMARK REFERENCE MOUNMENTS AND COVERS

STATE OF WISCONSIN
DEPARTMENT OF TRANSPORTATION

APPROVED

9/22/1999 /S/ Rory L. Rhinesmith

DATE CHIEF ROADWAY DEVELOPMENT ENGINEER

FHWA

NOTES

1. All Signs are Type I - Type SH Reflective - reference WIS DOT Standard Specification for HIGHWAY and STRUCTURE CONSTRUCTION latest edition.
2. Color:
   Background - Green
   Message - White
3. Message Series - E Modified except all cap WORDS are Series E

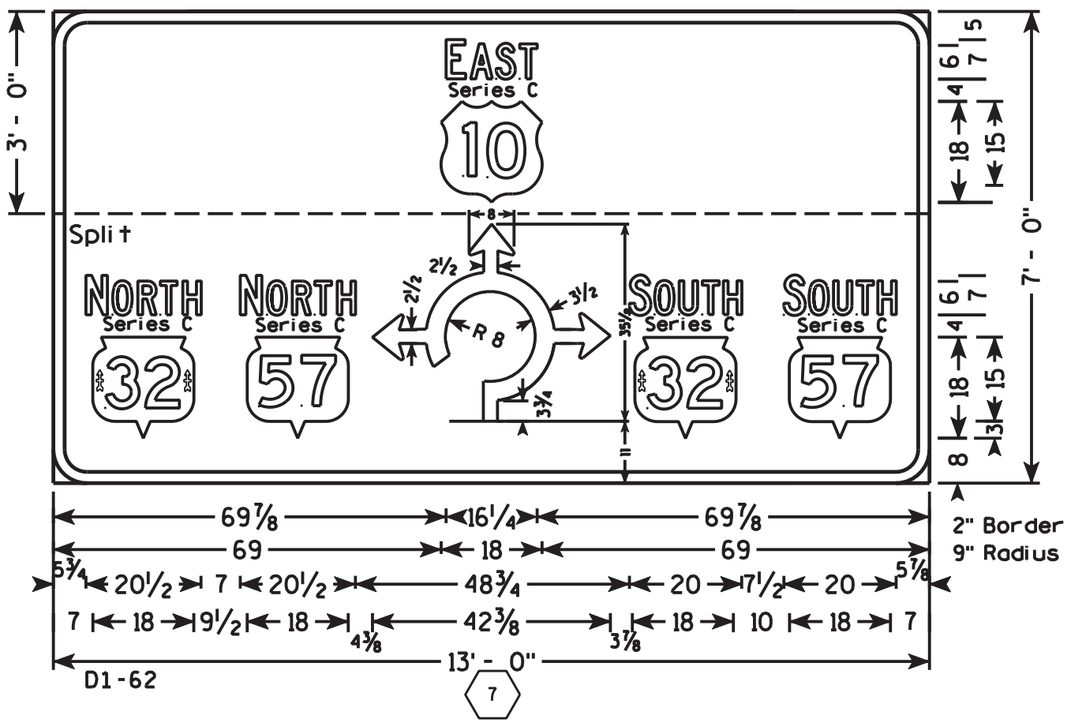

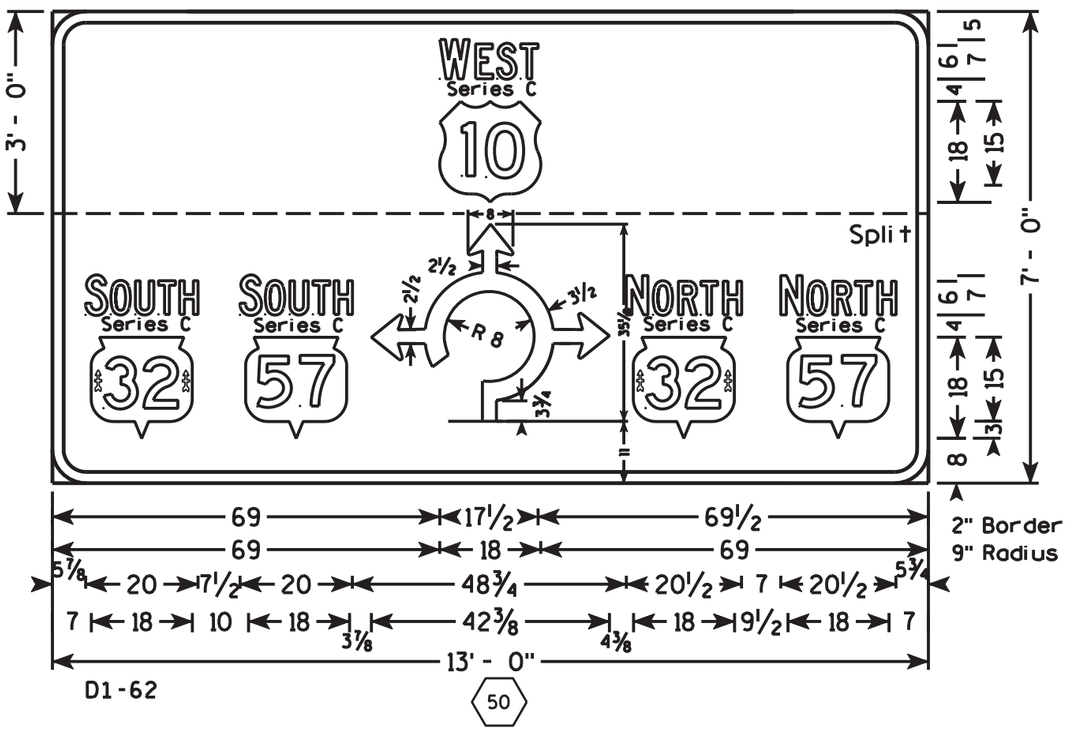

PLAN SHEET PRODUCED BY WisDOT-NE REGION

PROJECT NO: 1500-32-71	HWY: USH 10	COUNTY: CALUMET	SIGN DETAILS	SHEET NO: 150	E

NOTES

1. All Signs Type II - Type H Reflective - reference WIS DOT Standard Specification for HIGHWAY and STRUCTURE CONSTRUCTION latest edition.
2. Color:
   Background - Green
   Message - White
3. Message Series - E except as shown

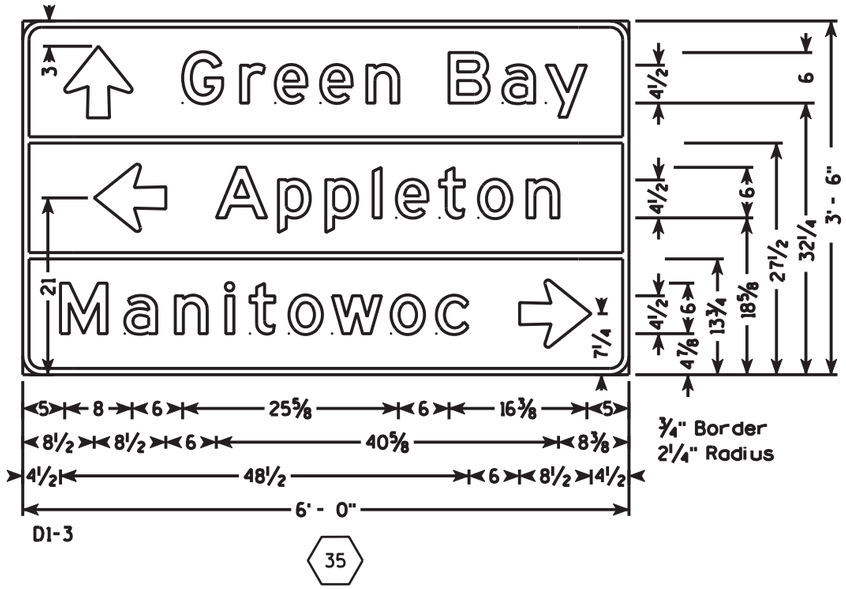

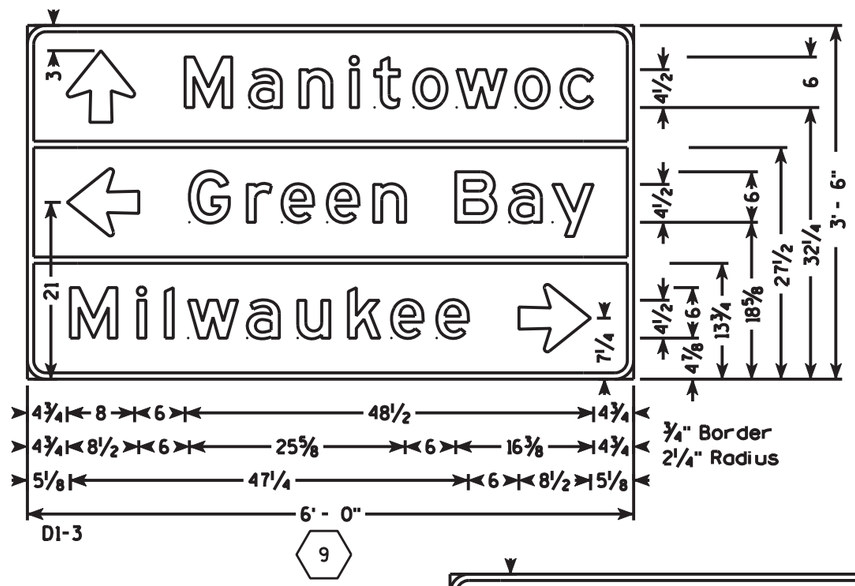

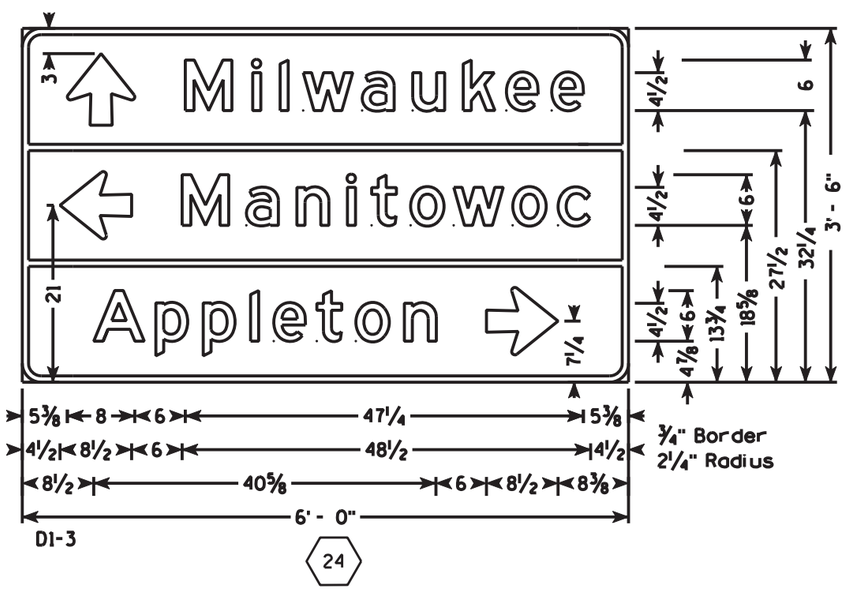

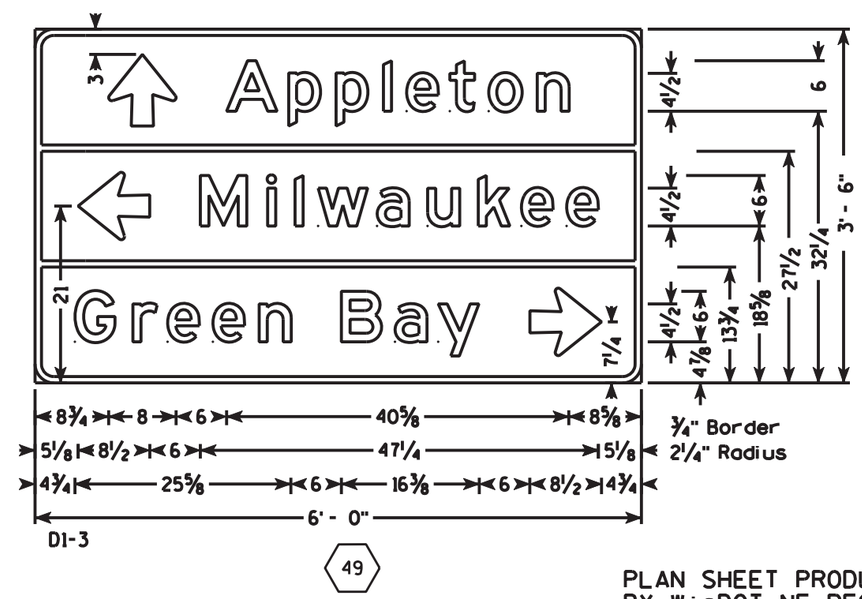

PLAN SHEET PRODUCED BY WisDOT-NE REGION

7

7

PROJECT NO: 1500-32-71	HWY: USH 10	COUNTY: CALUMET	SIGN DETAILS	SHEET NO: 151	E

NOTES

1. All Signs Type II - Type H Reflective - reference WIS DOT Standard Specification for HIGHWAY and STRUCTURE CONSTRUCTION latest edition.
2. Color:
   Background - Green
   Message - White
3. Message Series - E except as shown

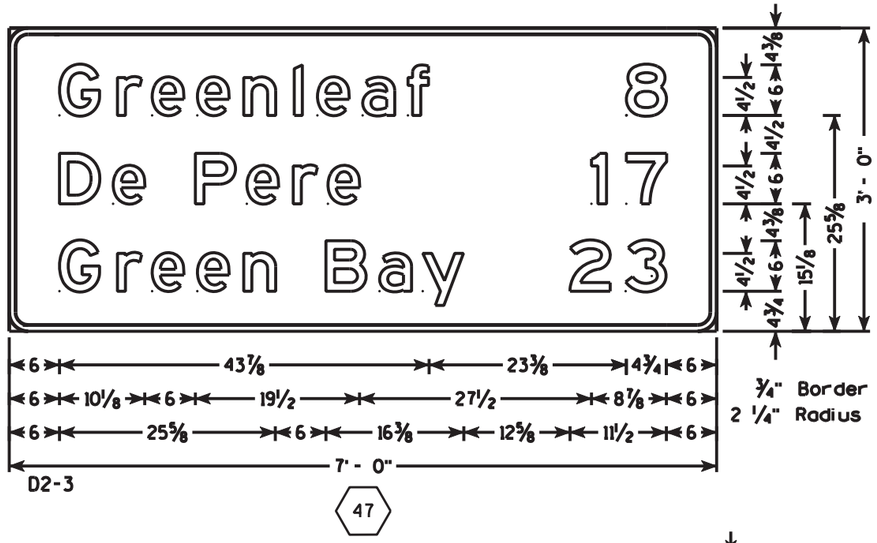

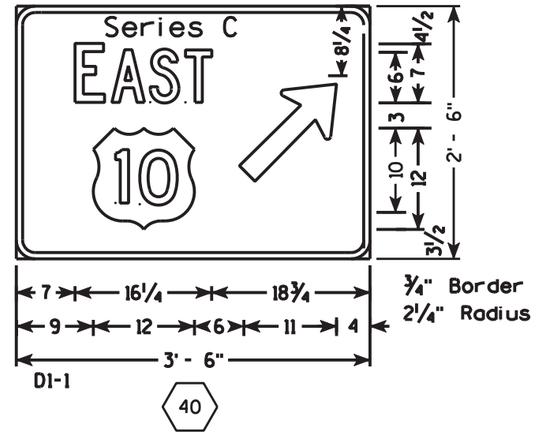

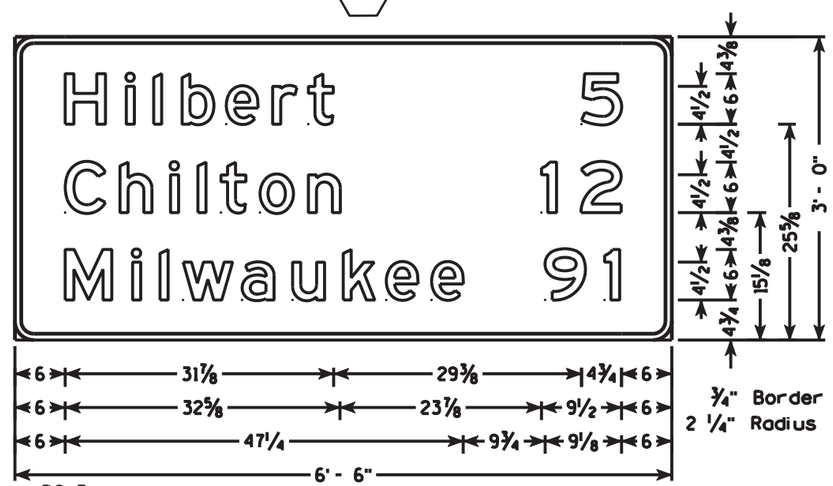

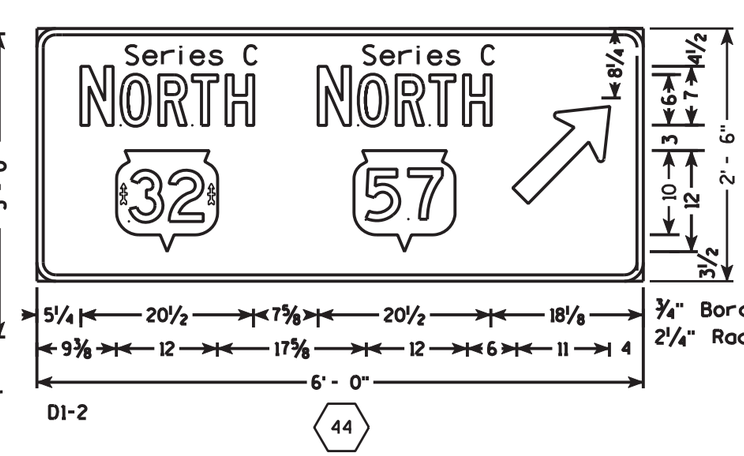

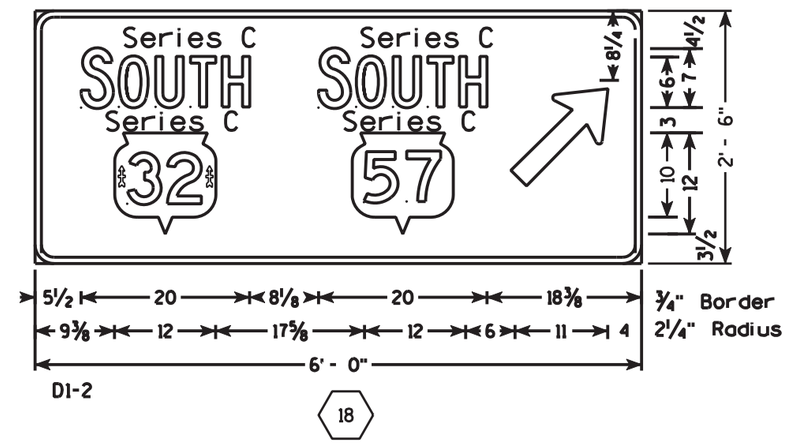

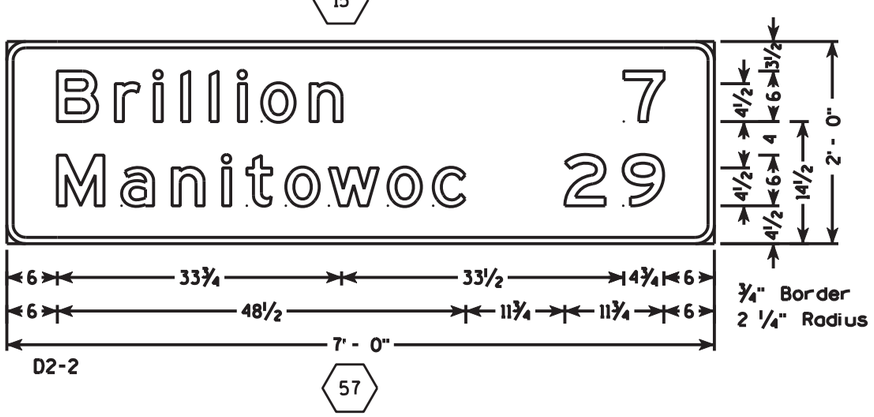

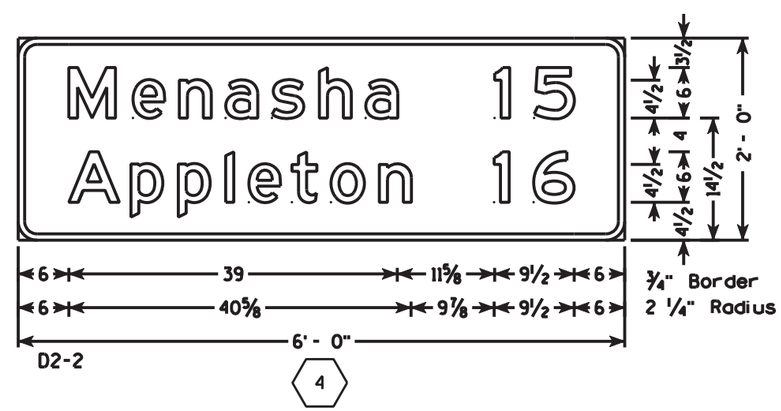

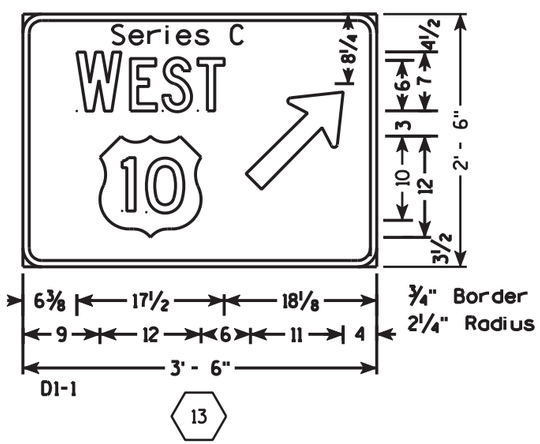

PLAN SHEET PRODUCED BY WisDOT-NE REGION

PROJECT NO: 1500-32-71	HWY: USH 10	COUNTY: CALUMET	SIGN DETAILS	SHEET NO: 152	E

NOTES

1. All Signs Type II - Type H Reflective - reference WIS DOT Standard Specification for HIGHWAY and STRUCTURE CONSTRUCTION latest edition.
2. Color:
   Background - Green
   Message - White
3. Message Series - E except as shown

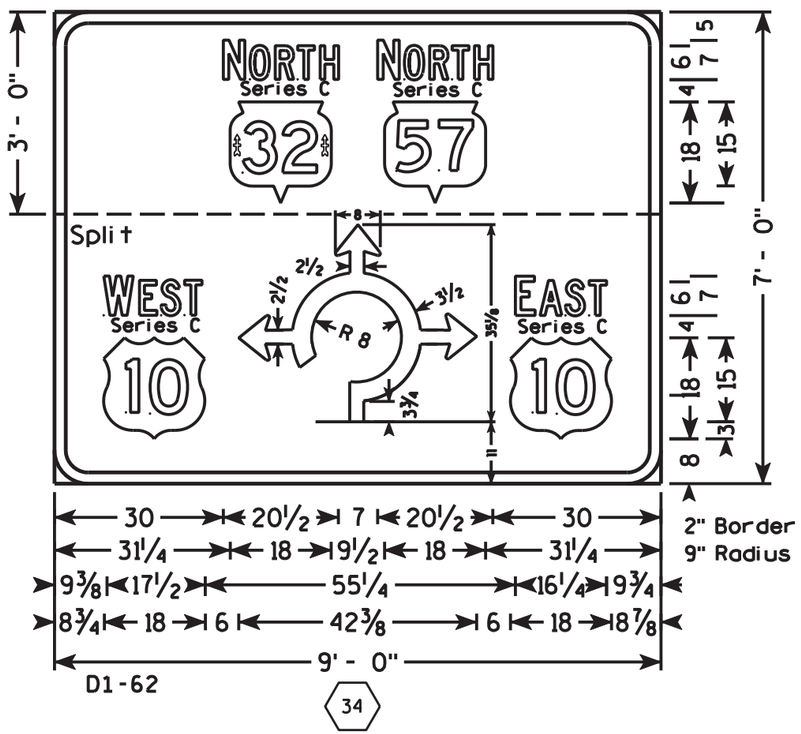

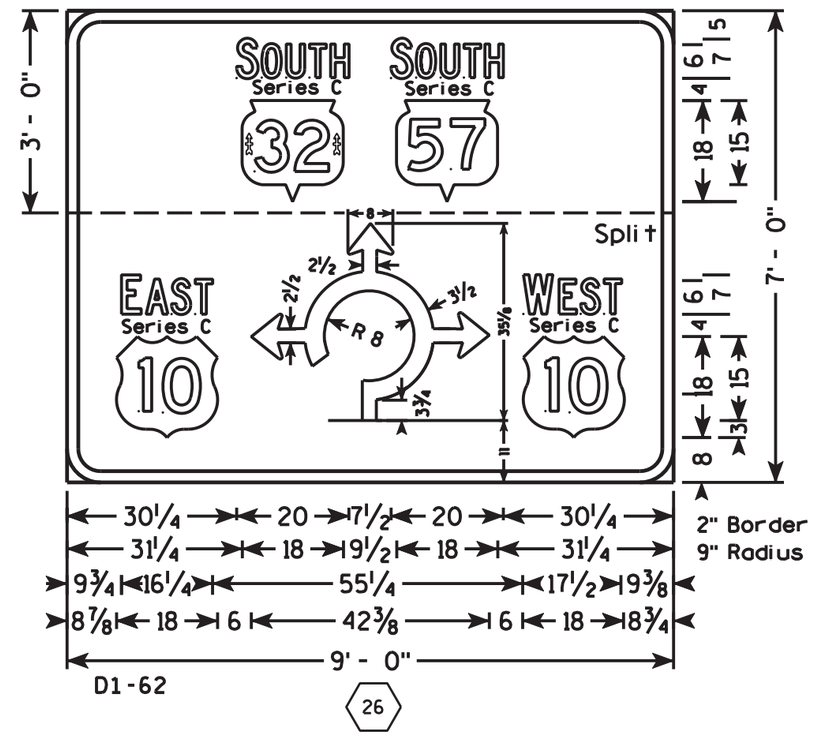

PLAN SHEET PRODUCED BY WisDOT-NE REGION

PROJECT NO: 1500-32-71	HWY: USH 10	COUNTY: CALUMET	SIGN DETAILS	SHEET NO: 153	E

TYPICAL ASSEMBLIES

J1-1

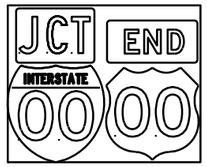

J1-2

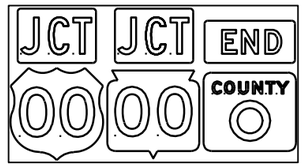

J1-3

J2-1

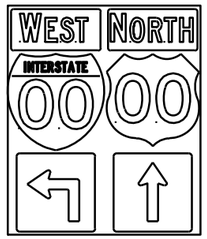

J2-2

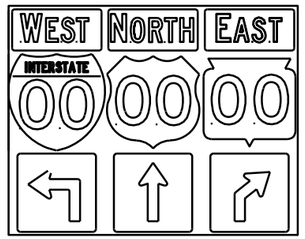

J2-3

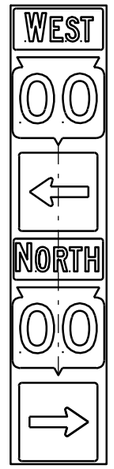

JV

(Typical Vertical J-Assembly
See Note 10 and 11)

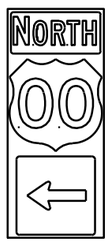

J3-1

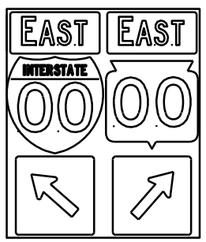

J3-2

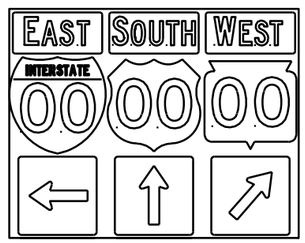

J3-3

J4-1

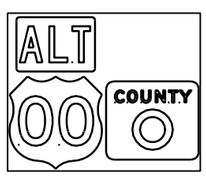

J4-2

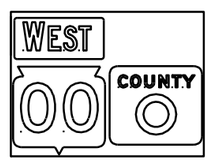

J4-2

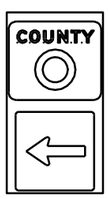

J13-1

J12-1

J32-1

J33-1

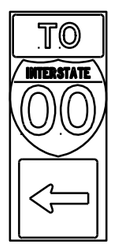

J23-1

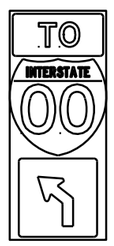

J22-1

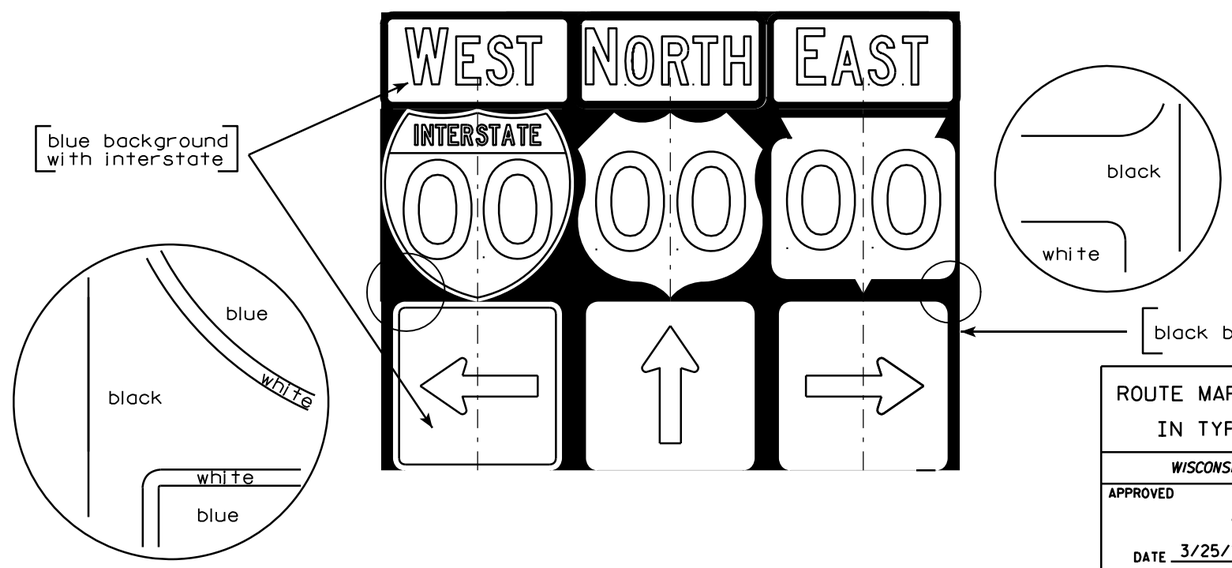

NOTES

1. Signs are Type II - Type H Reflective - reference WIS DOT Standard Specification for HIGHWAY and STRUCTURE CONSTRUCTION latest edition.
2. Color:
   Background - Black Non-reflective
   Message - see Note 5
3. Message Series - See Note 5
4. Corners shall be square or rounded if base material is plywood. If base material is metal the corners shall be rounded.
5. The colors and message spacing on each marker shall be according to the applicable route marker panel specifications.
6. Certain marker heads require the component pieces to be the same color. As an example, all the components used with an M1-1 Interstate marker shall be blue.
7. Single panel j-assemblies shall only be used with route marker shields that are same size. If the route marker shields are different size use multiple piece component.
8. Route assemblies that have 24 inch route shields and have dimensions greater than 48 inches (both vertical and horizontal) shall have one horizontal splice between the arrows and route shields. Vertical splices shall not be used on route assemblies with a horizontal dimension of 144 inches or less. The contractor shall not use more than one vertical joint per sign and the joint shall be between route shields.
9. Route assemblies that have 36 inch shields and have dimensions greater than 48 inchs (both vertical and horizontal) shall have two horizontal splices. One horizontal splice shall be between the cardinal direction and route shields and the other horizontal splice shall be between the arrows and route shields. Vertical splices shall not be used on route assemblies with a horizontal dimension of 144 or less. The contractor shall not use more than one vertical joint per sign and the joint shall be between route shields.
10. All Vertical J Assemblies are given a Sign Code of JV
11. For JV Assemblies that have a mixture of Interstate and non Interstate shields, arrows and cardinals shall be white on blue.

ROUTE MARKERS & COMPONENTS
IN TYPICAL ASSEMBLIES

WISCONSIN DEPT OF TRANSPORTATION

APPROVED Matthew R Rauch
for State Traffic Engineer

DATE 3/25/13 PLATE NO. A2-1S.7

7

7

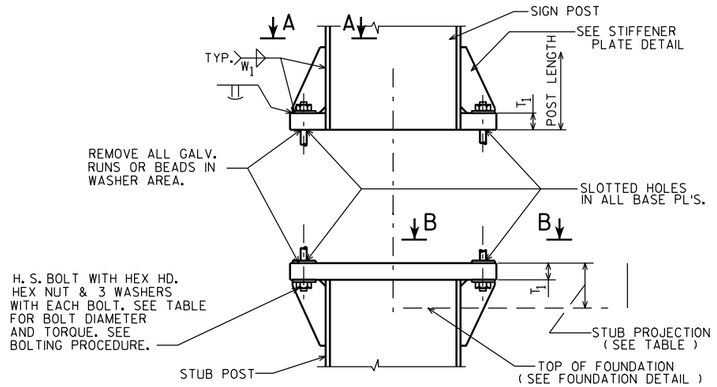

SIGN POST AND STUB POST ELEVATION

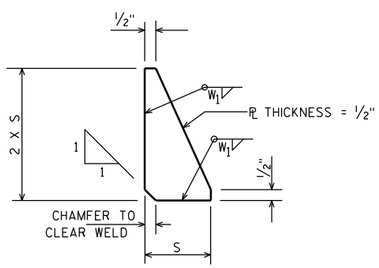

STIFFENER PLATE DETAIL

(SEE TABLE FOR DIMENSIONS)

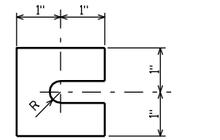

FURNISH 2 @ .012" ± THICK AND 2 @ .032" ± THICK SHIMS PER POST. SHIMS SHALL BE FABRICATED FROM BRASS SHIM STOCK OR STRIP CONFORMING TO A.S.T.M.- B36.

SHIM DETAIL

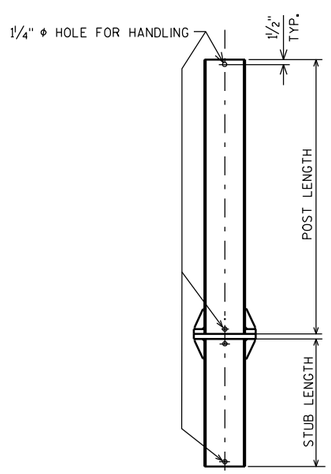

POST DETAIL

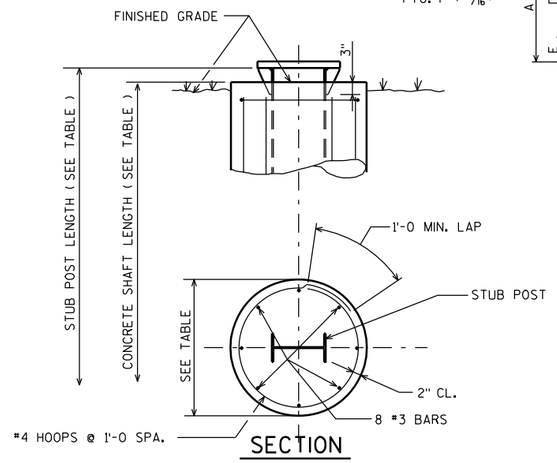

SECTION

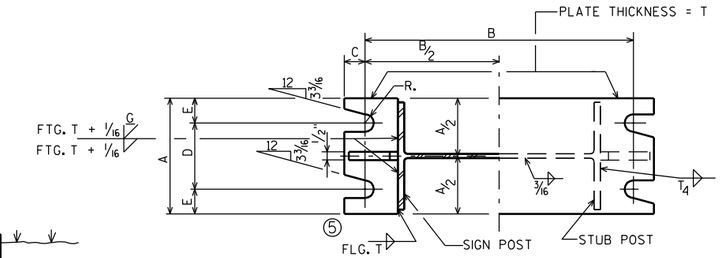

SECTION A-A SECTION B-B

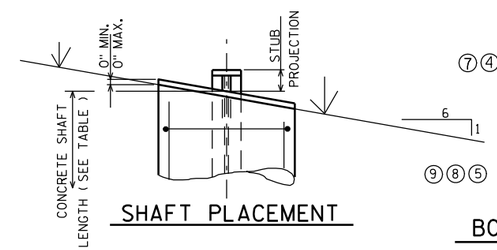

SHAFT PLACEMENT

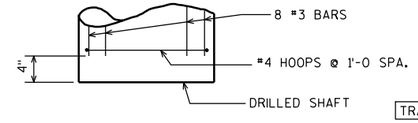

FOUNDATION DETAIL

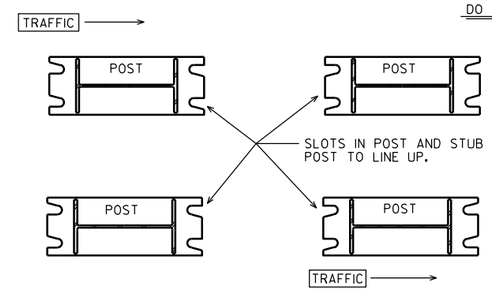

POST SLOT ORIENTATION ⑦

DESIGN DATA

WIND PRESSURE = 75 M.P.H.
WIND COMPONENTS - NORMAL = 1.0 TRANSVERSE = 0.0
ICE LOAD = 3 P.S.F.

GROUP LOADS	PERCENT OF ALLOWABLE STRESS
1. DEAD	100
2. DEAD & WIND	140
3. DEAD, ICE & 1/2 WIND▲	140 ▲25 P.S.F. MIN.

ALLOWABLE SOIL PRESSURE = 1 1/2 T / SQ. FT.
WIND LOAD WAS APPLIED TO THE AREA OF THE SIGN AND TO THE SUPPORTING MEMBERS.
ICE LOAD WAS APPLIED TO ONE FACE OF THE SIGN AND AROUND THE SURFACE OF THE SUPPORTING MEMBERS.

GENERAL NOTES

DRAWINGS SHALL NOT BE SCALED.
DESIGN CONFORMS WITH A.A.S.H.T.O. SPECIFICATIONS 1985.
ALL POSTS, POST STUBS & ATTACHMENTS SHALL BE A.S.T.M. A709 GRADE 50.
⑨ THE POST, BASE PLATES, UPPER SIX INCHES OF STUB POST FLANGE SPLICE PLATE AND FUSE PLATE SHALL BE GALVANIZED AFTER FABRICATION.
H.S. BOLTS, WASHERS & NUTS SHALL BE A325 GALVANIZED WHEN POSTS, POST STUBS AND ATTACHMENTS ARE A709 GRADE 50 AND GALVANIZED.

BOLTING PROCEDURE - BASE CONNECTION

1. ASSEMBLE SIGN POST TO STUB POST WITH BOLTS AND ONE OF THE FLAT WASHERS ON EACH BOLT BETW. PLATES.
2. SHIM AS REQ'D. TO PLUMB POST.
3. TIGHTEN ALL BOLTS THE MAXIMUM POSSIBLE WITH 12" OR 15" WRENCH TO BED WASHERS & SHIMS AND TO CLEAN BOLT THREADS, THEN LOOSEN EACH BOLT IN TURN AND RETIGHTEN IN A SYSTEMATIC ORDER TO THE PRESCRIBED TORQUE. (SEE TABLE)
4. BURR THREADS AT JUNCTION WITH NUT USING A CENTER PUNCH TO PREVENT NUT LOOSENING.

NOTE:
TIGHTEN THE HIGH STRENGTH BOLTS TO THE TORQUE SHOWN. DO NOT OVERTIGHTEN.

QUANTITIES FOR 1 FOOTING		
	CONC. MASONRY C.Y.	REINF. STEEL LBS.
A	0.6	34
B	0.8	49
C	0.9	50
D	0.9	56
E	1.0	62

⑦

REINF. TYPE	#3	#4
A	8 @ 4'-5	5 @ 6'-3
B	8 @ 6'-5	7 @ 6'-3
C	8 @ 6'-11	7 @ 6'-3
D	8 @ 7'-5	8 @ 6'-3
E	8 @ 7'-11	9 @ 6'-3

⑦

	TYPE	DIMENSION / POST SIZE	BASE CONNECTION DATA TABLE: BOLT SIZE & TORQUE	A	B	C	D	E	T_1	T_4	W_1	R	S	FOUNDATION DATA: STUB LENGTH	STUB PROJECTION	SHAFT DIAMETER	SHAFT LENGTH	K ②
④	A	W10"X12.0 #/FT.	3/4" Φ @ 75#-FT.	5 1/4"	1'-0 3/8	7/8"	3 1/2"	7/8"	1"	3/16"	5/16"	13/32"	2 1/8"	3'-6	3"	2'-0 Φ	5'-0	76.0# ④
④	B	W12"X16.0 #/FT.	7/8" Φ @ 85#-FT.	5 1/2"	1'-4 1/4	1"	3 1/2"	1"	1 1/4"	1/4"	5/16"	15/32"	3"	5'-6	3"	2'-0 Φ	7'-0	146.5# ④
	C	W12"X19.0 #/FT.	7/8" Φ @ 85#-FT.	5 1/2"	1'-4 1/4	1"	3 1/2"	1"	1 1/2"	5/16"	5/16"	15/32"	3"	6'-0	3"	2'-0 Φ	7'-6	182.1#
	D	W12"X22.0 #/FT.	7/8" Φ @ 85#-FT.	5 1/2"	1'-4 1/4	1"	3 1/2"	1"	1 1/2"	3/8"	5/16"	15/32"	3"	6'-6	3"	2'-0 Φ	8'-0	210.5#
③	E	W12"X26.0 #/FT.	1" Φ @ 90#-FT.	7"	1'-4 1/4	1 1/4"	4"	1 1/2"	1 1/2"	3/8"	5/16"	17/32"	3"	7'-0	3"	2'-0 Φ	8'-6	293.0# ③

① ⑥ ①

STRUCTURAL CARBON STEEL PAY WTS. (1 POST) = K+ (POST LENGTH X POST WT.)
" K " INCLUDES STUB, BASE PLATES, STIFFS., BOLTS, AND WASHERS.

WISCONSIN DEPT OF TRANSPORTATION
APPROVED Matthew R Rauch for State Traffic Engineer
DATE 4/26/11 PLATE NO. A3-1.13

NO.	DATE	REVISION
⑨	4-26-11	REMOVE NON-GALVANIZED
⑧	10-30-96	NOT GALVANIZED/GALVANIZED
⑦	10-30-92	QUANT., A588 EXCEPT., ADD SLOT VIEW
⑥	8-24-87	BASE CONN. WELD
⑤	10-13-81	BASE CONN. WELD & FUSE PL WASHERS
④	10-19-79	POST A & B, A572 GR. 50, & K
②	11-28-78	"K" ③ 4-23-79 TYPE "E"
①	5-4-78	T_1 , T_2 & W_1

STATE OF WISCONSIN
DEPARTMENT OF TRANSPORTATION
DIVISION OF HIGHWAYS

TYPE A, B, C, D, & E

CONST. SPEC. 2011 | DRAWN BY JPH | PLANS CK'D.

FTG. & SIGN SUPPORT DETAILS GROUND MOUNT BREAK-AWAY SIGNS

SHEET

PROJECT NO: | HWY: | COUNTY: | SHEET NO: 155 | E

VERTICAL DIMENSION ⇨

HORIZONTAL DIMENSION ⇩

Type "A" (2 Posts) 1.2 CY Conc. 68 LBs Bar Steel

⇩ \ ⇨	2.5 ft.	3 ft.	3.5 ft.	4 ft.	4.5 ft.	5 ft.	5.5 ft.	6 ft.	6.5 ft.	7 ft.	7.5 ft.	8 ft.	8.5 ft.	9 ft.	9.5 ft.	10 ft.	10.5 ft.	11 ft.	11.5 ft.	12 ft.	12.5 ft.	13 ft.	13.5 ft.	14 ft.	14.5 ft.	15 ft.	15.5 ft.	16 ft.
22 ft.	55 Sq. Ft	66 Sq. Ft	77 Sq. Ft	88 Sq. Ft	99 Sq. Ft	110 Sq. Ft	121 Sq. Ft	132 Sq. Ft	143 Sq. Ft	154 Sq. Ft	165 Sq. Ft	176 Sq. Ft	187 Sq. Ft	198 Sq. Ft	209 Sq. Ft	220 Sq. Ft	231 Sq. Ft	242 Sq. Ft	253 Sq. Ft	264 Sq. Ft	275 Sq. Ft	286 Sq. Ft	297 Sq. Ft	308 Sq. Ft	319 Sq. Ft	330 Sq. Ft	341 Sq. Ft	352 Sq. Ft
23 ft.	57.5 Sq. Ft	69 Sq. Ft	80.5 Sq. Ft	92 Sq. Ft	103.5 Sq. Ft	115 Sq. Ft	126.5 Sq. Ft	138 Sq. Ft	149.5 Sq. Ft	161 Sq. Ft	172.5 Sq. Ft	184 Sq. Ft	195.5 Sq. Ft	207 Sq. Ft	218.5 Sq. Ft	230 Sq. Ft	241.5 Sq. Ft	253 Sq. Ft	264.5 Sq. Ft	276 Sq. Ft	287.5 Sq. Ft	299 Sq. Ft	310.5 Sq. Ft	322 Sq. Ft	333.5 Sq. Ft	345 Sq. Ft	356.5 Sq. Ft	368 Sq. Ft
24 ft.	60 Sq. Ft	72 Sq. Ft	84 Sq. Ft	96 Sq. Ft	108 Sq. Ft	120 Sq. Ft	132 Sq. Ft	144 Sq. Ft	156 Sq. Ft	168 Sq. Ft	180 Sq. Ft	192 Sq. Ft	204 Sq. Ft	216 Sq. Ft	228 Sq. Ft	240 Sq. Ft	252 Sq. Ft	264 Sq. Ft	276 Sq. Ft	288 Sq. Ft	300 Sq. Ft	312 Sq. Ft	324 Sq. Ft	336 Sq. Ft	348 Sq. Ft	360 Sq. Ft	372 Sq. Ft	384 Sq. Ft
25 ft.	62.5 Sq. Ft	75 Sq. Ft	87.5 Sq. Ft	100 Sq. Ft	112.5 Sq. Ft	125 Sq. Ft	137.5 Sq. Ft	150 Sq. Ft	162.5 Sq. Ft	175 Sq. Ft	187.5 Sq. Ft	200 Sq. Ft	212.5 Sq. Ft	225 Sq. Ft	237.5 Sq. Ft	250 Sq. Ft	262.5 Sq. Ft	275 Sq. Ft	287.5 Sq. Ft	300 Sq. Ft	312.5 Sq. Ft	325 Sq. Ft	337.5 Sq. Ft	350 Sq. Ft	362.5 Sq. Ft	375 Sq. Ft	387.5 Sq. Ft	400 Sq. Ft
26 ft.	65 Sq. Ft	78 Sq. Ft	91 Sq. Ft	104 Sq. Ft	117 Sq. Ft	130 Sq. Ft	143 Sq. Ft	156 Sq. Ft	169 Sq. Ft	182 Sq. Ft	195 Sq. Ft	208 Sq. Ft	221 Sq. Ft	234 Sq. Ft	247 Sq. Ft	260 Sq. Ft	273 Sq. Ft	286 Sq. Ft	299 Sq. Ft	312 Sq. Ft	325 Sq. Ft	338 Sq. Ft	351 Sq. Ft	364 Sq. Ft	377 Sq. Ft	390 Sq. Ft	403 Sq. Ft	416 Sq. Ft
27 ft.	67.5 Sq. Ft	81 Sq. Ft	94.5 Sq. Ft	108 Sq. Ft	121.5 Sq. Ft	135 Sq. Ft	148.5 Sq. Ft	162 Sq. Ft	175.5 Sq. Ft	189 Sq. Ft	202.5 Sq. Ft	216 Sq. Ft	229.5 Sq. Ft	243 Sq. Ft	256.5 Sq. Ft	270 Sq. Ft	283.5 Sq. Ft	297 Sq. Ft	310.5 Sq. Ft	324 Sq. Ft	337.5 Sq. Ft	351 Sq. Ft	364.5 Sq. Ft	378 Sq. Ft	391.5 Sq. Ft	405 Sq. Ft	418.5 Sq. Ft	432 Sq. Ft
28 ft.	70 Sq. Ft	84 Sq. Ft	98 Sq. Ft	112 Sq. Ft	126 Sq. Ft	140 Sq. Ft	154 Sq. Ft	168 Sq. Ft	182 Sq. Ft	196 Sq. Ft	210 Sq. Ft	224 Sq. Ft	238 Sq. Ft	252 Sq. Ft	266 Sq. Ft	280 Sq. Ft	294 Sq. Ft	308 Sq. Ft	322 Sq. Ft	336 Sq. Ft	350 Sq. Ft	364 Sq. Ft	378 Sq. Ft	392 Sq. Ft	406 Sq. Ft	420 Sq. Ft	434 Sq. Ft	448 Sq. Ft
29 ft.	72.5 Sq. Ft	87 Sq. Ft	101.5 Sq. Ft	116 Sq. Ft	130.5 Sq. Ft	145 Sq. Ft	159.5 Sq. Ft	174 Sq. Ft	188.5 Sq. Ft	203 Sq. Ft	217.5 Sq. Ft	232 Sq. Ft	246.5 Sq. Ft	261 Sq. Ft	275.5 Sq. Ft	290 Sq. Ft	304.5 Sq. Ft	319 Sq. Ft	333.5 Sq. Ft	348 Sq. Ft	362.5 Sq. Ft	377 Sq. Ft	391.5 Sq. Ft	406 Sq. Ft	420.5 Sq. Ft	435 Sq. Ft	449.5 Sq. Ft	464 Sq. Ft
30 ft.	75 Sq. Ft	90 Sq. Ft	105 Sq. Ft	120 Sq. Ft	135 Sq. Ft	150 Sq. Ft	165 Sq. Ft	180 Sq. Ft	195 Sq. Ft	210 Sq. Ft	225 Sq. Ft	240 Sq. Ft	255 Sq. Ft	270 Sq. Ft	285 Sq. Ft	300 Sq. Ft	315 Sq. Ft	330 Sq. Ft	345 Sq. Ft	360 Sq. Ft	375 Sq. Ft	390 Sq. Ft	405 Sq. Ft	420 Sq. Ft	435 Sq. Ft	450 Sq. Ft	465 Sq. Ft	480 Sq. Ft
31 ft.	77.5 Sq. Ft	93 Sq. Ft	108.5 Sq. Ft	124 Sq. Ft	139.5 Sq. Ft	155 Sq. Ft	170.5 Sq. Ft	186 Sq. Ft	201.5 Sq. Ft	217 Sq. Ft	232.5 Sq. Ft	248 Sq. Ft	263.5 Sq. Ft	279 Sq. Ft	294.5 Sq. Ft	310 Sq. Ft	325.5 Sq. Ft	341 Sq. Ft	356.5 Sq. Ft	372 Sq. Ft	387.5 Sq. Ft	403 Sq. Ft	418.5 Sq. Ft	434 Sq. Ft	449.5 Sq. Ft	465 Sq. Ft	480.5 Sq. Ft	496 Sq. Ft
32 ft.	80 Sq. Ft	96 Sq. Ft	112 Sq. Ft	128 Sq. Ft	144 Sq. Ft	160 Sq. Ft	176 Sq. Ft	192 Sq. Ft	208 Sq. Ft	224 Sq. Ft	240 Sq. Ft	256 Sq. Ft	272 Sq. Ft	288 Sq. Ft	304 Sq. Ft	320 Sq. Ft	336 Sq. Ft	352 Sq. Ft	368 Sq. Ft	384 Sq. Ft	400 Sq. Ft	416 Sq. Ft	432 Sq. Ft	448 Sq. Ft	464 Sq. Ft	480 Sq. Ft	496 Sq. Ft	512 Sq. Ft
33 ft.	82.5 Sq. Ft	99 Sq. Ft	115.5 Sq. Ft	132 Sq. Ft	148.5 Sq. Ft	165 Sq. Ft	181.5 Sq. Ft	198 Sq. Ft	214.5 Sq. Ft	231 Sq. Ft	247.5 Sq. Ft	264 Sq. Ft	280.5 Sq. Ft	297 Sq. Ft	313.5 Sq. Ft	330 Sq. Ft	346.5 Sq. Ft	363 Sq. Ft	379.5 Sq. Ft	396 Sq. Ft	412.5 Sq. Ft	429 Sq. Ft	445.5 Sq. Ft	462 Sq. Ft	478.5 Sq. Ft	495 Sq. Ft	511.5 Sq. Ft	528 Sq. Ft
34 ft.	85 Sq. Ft	102 Sq. Ft	119 Sq. Ft	136 Sq. Ft	153 Sq. Ft	170 Sq. Ft	187 Sq. Ft	204 Sq. Ft	221 Sq. Ft	238 Sq. Ft	255 Sq. Ft	272 Sq. Ft	289 Sq. Ft	306 Sq. Ft	323 Sq. Ft	340 Sq. Ft	357 Sq. Ft	374 Sq. Ft	391 Sq. Ft	408 Sq. Ft	425 Sq. Ft	442 Sq. Ft	459 Sq. Ft	476 Sq. Ft	493 Sq. Ft	510 Sq. Ft	527 Sq. Ft	544 Sq. Ft
35 ft.	87.5 Sq. Ft	105 Sq. Ft	122.5 Sq. Ft	140 Sq. Ft	157.5 Sq. Ft	175 Sq. Ft	192.5 Sq. Ft	210 Sq. Ft	227.5 Sq. Ft	245 Sq. Ft	262.5 Sq. Ft	280 Sq. Ft	297.5 Sq. Ft	315 Sq. Ft	332.5 Sq. Ft	350 Sq. Ft	367.5 Sq. Ft	385 Sq. Ft	402.5 Sq. Ft	420 Sq. Ft	437.5 Sq. Ft	455 Sq. Ft	472.5 Sq. Ft	490 Sq. Ft	507.5 Sq. Ft	525 Sq. Ft	542.5 Sq. Ft	560 Sq. Ft
36 ft.	90 Sq. Ft	108 Sq. Ft	126 Sq. Ft	144 Sq. Ft	162 Sq. Ft	180 Sq. Ft	198 Sq. Ft	216 Sq. Ft	234 Sq. Ft	252 Sq. Ft	270 Sq. Ft	288 Sq. Ft	306 Sq. Ft	324 Sq. Ft	342 Sq. Ft	360 Sq. Ft	378 Sq. Ft	396 Sq. Ft	414 Sq. Ft	432 Sq. Ft	450 Sq. Ft	468 Sq. Ft	486 Sq. Ft	504 Sq. Ft	522 Sq. Ft	540 Sq. Ft	558 Sq. Ft	576 Sq. Ft

Type "B" (2 Posts)
1.6 CY Conc.
98 LBs Bar Steel

Type "C" (2 Posts)
1.8 CY Conc.
100 LBs Bar Steel

Type "D" (2 Posts)
1.8 CY Conc.
112 LBs Bar Steel

Type "C" (3 Posts)
2.7 CY Conc.
150 LBs Bar Steel

Type "D" (3 Posts)
2.7 CY Conc.
168 LBs Bar Steel

STEEL POST SIZE

"A" - W10" x 12"
"B" - W12" x 16"
"C" - W12" x 19"
"D" - W12 x 22"

7

7

DETERMINATION OF HIGH STRENGTH STRUCTURAL STEEL SIGN SUPPORT TYPE

WISCONSIN DEPT OF TRANSPORTATION

APPROVED Matthew R Rauch
for State Traffic Engineer

DATE 3/5/10 PLATE NO. A3-3.2

PROJECT NO: | SHEET NO: E

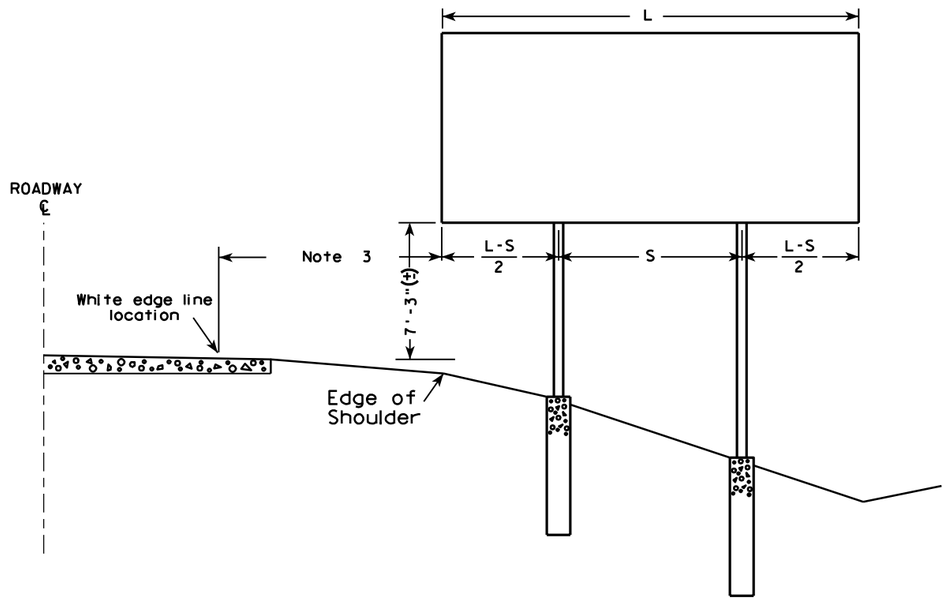

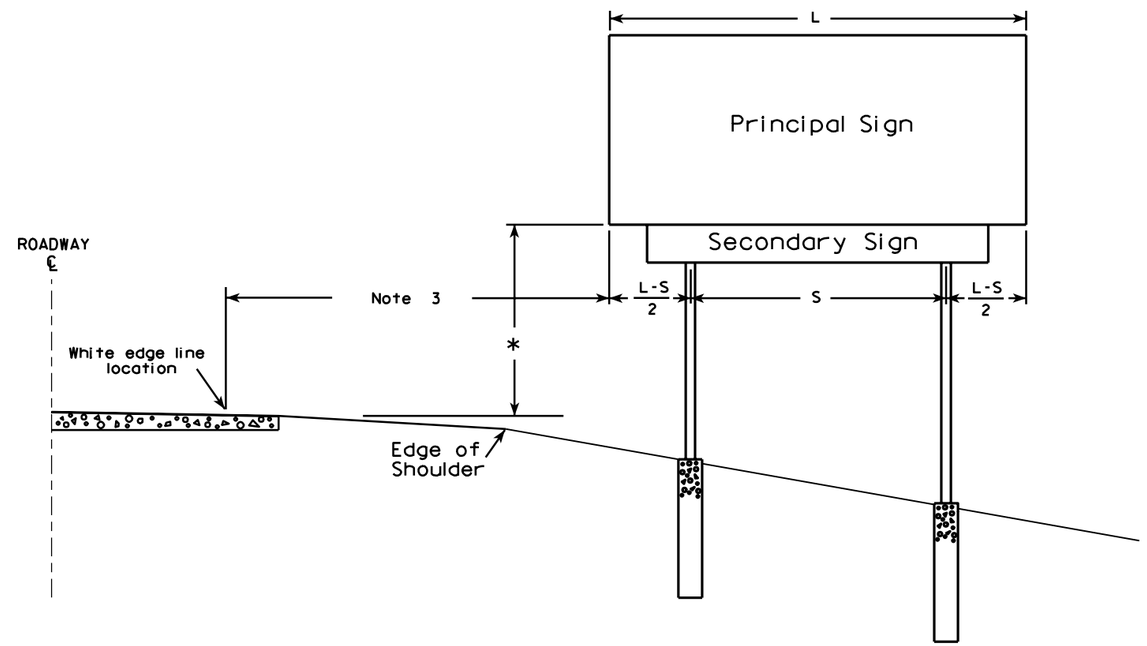

GENERAL NOTES

1. For a 2 post installation, S equals 3L/5, but shall not be less than 9 ft.
2. For a 3 post installation, S equals 5L/7, but shall not be less than 18 ft., and the space between any two posts shall not be less than 9 ft.
3. Unless noted in the plan, the sign offset distance shall be a minimum of 17'-6", desirable 30'-0".
4. The (±) tolerance shown on this sheet is 3 in.
5. The vertical sign height clearance detailed is measured from the bottom of the sign to the near edge of pavement.
6. Post lengths shown in the miscellaneous quantities are estimated lengths. The contractor shall verify post lengths at the time of final grading.
7. Refer to the Traffic Guidelines Manual for further guidance on minimum vertical clearance requirements.

* Clearance is 8'-3"(±) when the secondary sign is 3 ft. or less in height. For secondary signs larger than 3 ft., the clearance to the bottom of the secondary sign shall be 5'-3"(±).

7

7

TYPICAL INSTALLATION OF TYPE I SIGNS

WISCONSIN DEPT OF TRANSPORTATION

APPROVED Matthew R Rauch
for State Traffic Engineer

DATE 4/02/08 PLATE NO. A4-1.9

PROJECT NO:				SHEET NO: 157	E

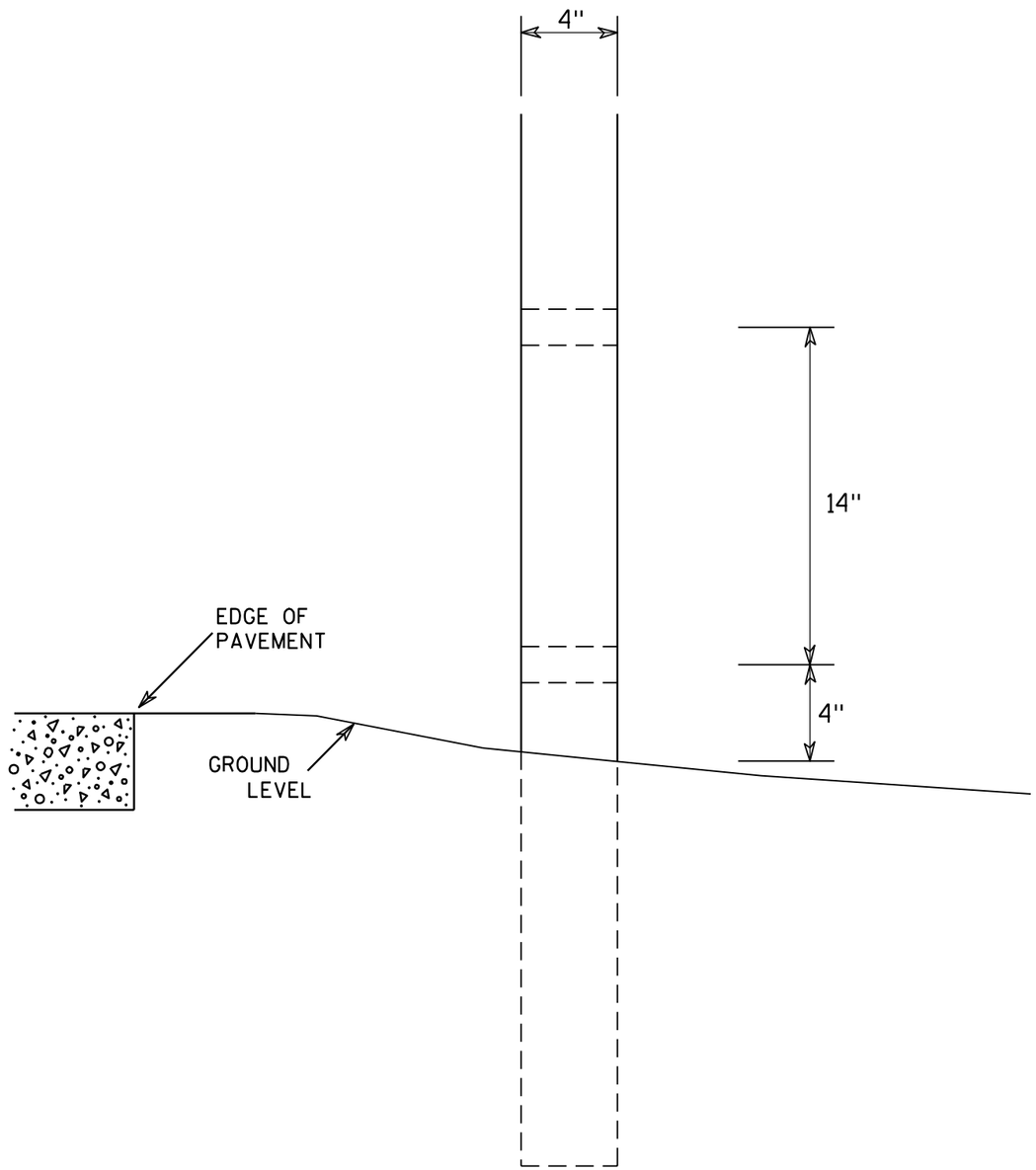

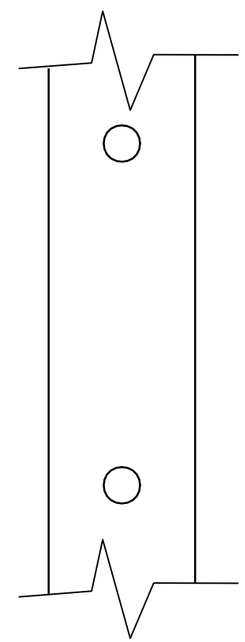

SIDE VIEW

GENERAL NOTES

1. All 4 x 6 Wood Posts shall be modified by having two 1½" diameter holes drilled perpendicular to the roadway centerline.

4 X 6 WOOD POST MODIFICATIONS

WISCONSIN DEPT OF TRANSPORTATION

APPROVED Chester J Spang for State Traffic Engineer

DATE 3/27/97 PLATE NO. A4-11.2

PROJECT NO:	HWY:	COUNTY:		SHEET NO: 158	E

URBAN AREA

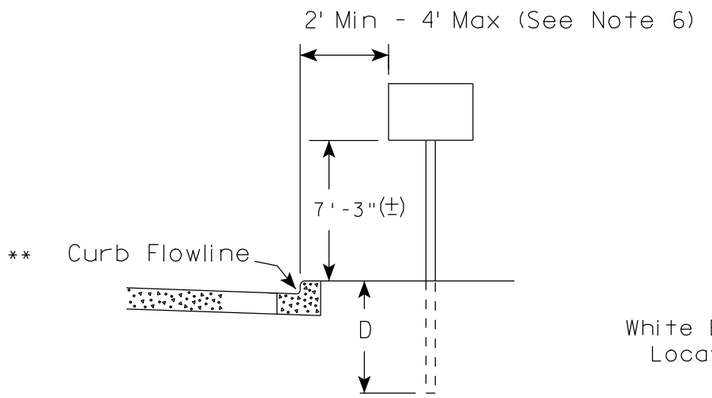

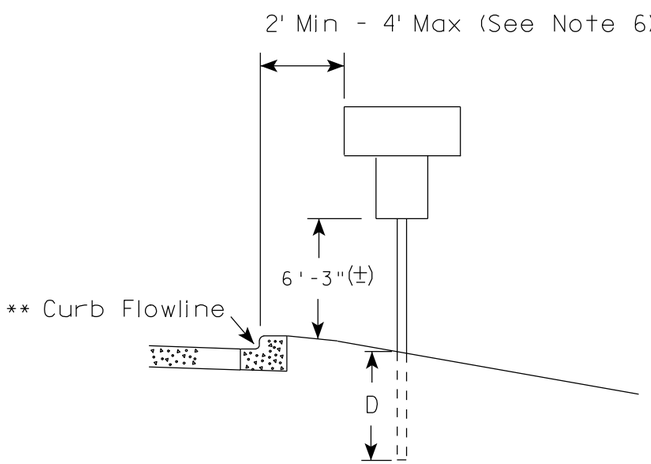

RURAL AREA (See Note 2)

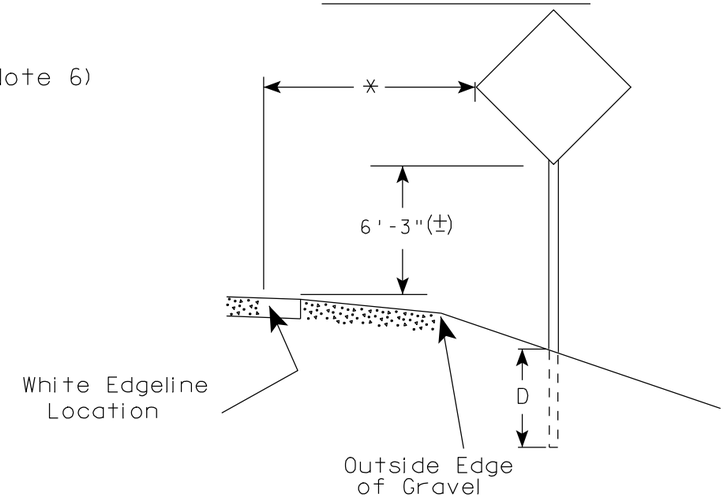

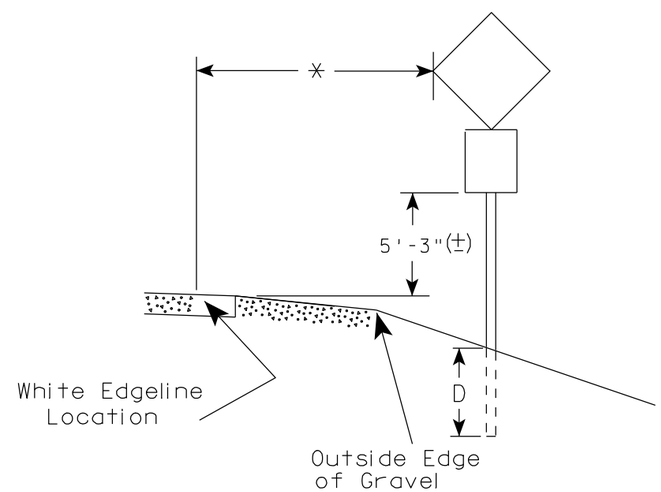

** The existence of curb and gutter does not in itself mandate the vertical clearance illustrated. That height is typically measured where there is sidewalk adjacent to the roadway or parking is permitted. In the absence of sidewalk vertical clearance is measured from the top of the curb. Offset of signs is measured from the flow line.

* 6 feet from edge of a paved shoulder or 12 feet from the edge of pavement (edge line location) or 2 feet from outside edge of gravel, whichever is greater unless directed by project engineer.

GENERAL NOTES

1. Signs wider than 4 feet or larger than 20 sq. ft. shall be mounted on multiple posts. Refer to plate A4-4.
2. If signs are mounted on barrier wall, see A4-10 sign plate.
3. For expressways and freeways, mounting height is 7'- 3" (±) or 6'-3" (±) depending upon existence of a sub-sign.
4. Minimum mounting height for J assemblies (A4-5) is 7'-3" (±) or 6'-3" (±) per urban or rural detail respectively.
5. Minimum mounting height for signs mounted on traffic signal poles is 5'- 3" (±).
6. Offset distance shall be consistent with existing signs or consistent throughout length of project.
7. The (±) tolerance for mounting height is 3 inches.
8. Folding stop signs (R1-1F) shall be mounted at a height of 5'-3" (±) or as directed by the Engineer.
9. The Double Arrow sign (W12-1) shall be mounted at a height of 2'-3" (±). The Chevron sign (W1-8), Roundabout Chevron panel (R6-4B), Enhanced Reference Markers, Clearance Markers (W5-52), Mile Markers (D10 series) & End of Rod Markers (W5-56 & W5-56A) shall be mounted at a height of 4'-3" (+).

POST EMBEDMENT DEPTH

Area of Sign Installation (Sq. Ft.)	D (Min)
20 or Less	4'
Greater than 20	5'

TYPICAL INSTALLATION OF PERMANENT TYPE II SIGNS ON SINGLE POSTS

WISCONSIN DEPT OF TRANSPORTATION

APPROVED Matthew R Rauch for State Traffic Engineer

DATE 5/24/2013 PLATE NO. A4-3.17

7

7

PROJECT NO:	HWY:	COUNTY:		SHEET NO: 159	E

URBAN AREA

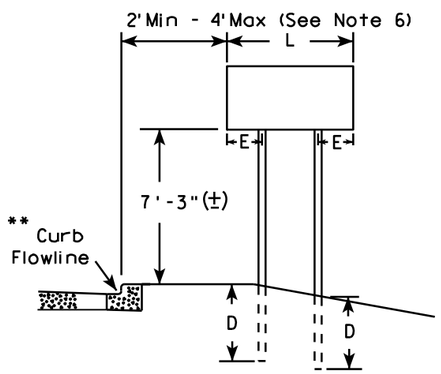

RURAL AREA (See Note 3)

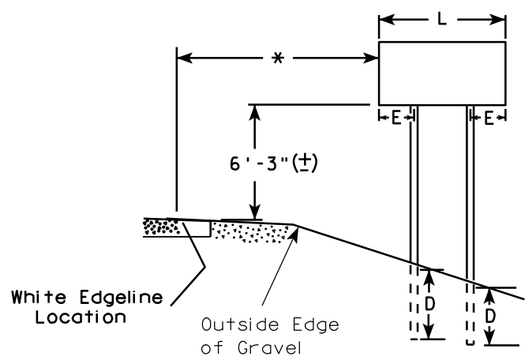

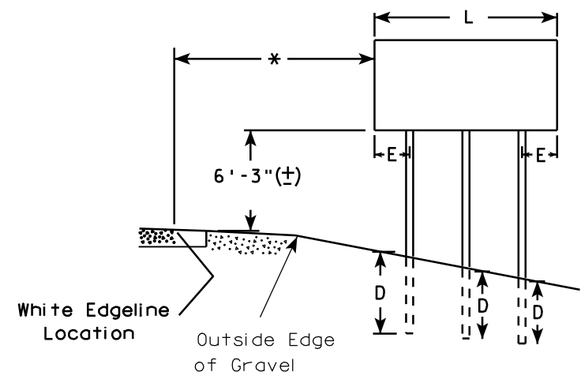

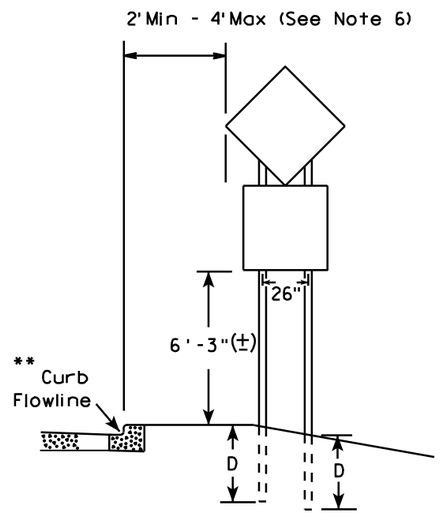

48" DIAMOND WARNING SIGN

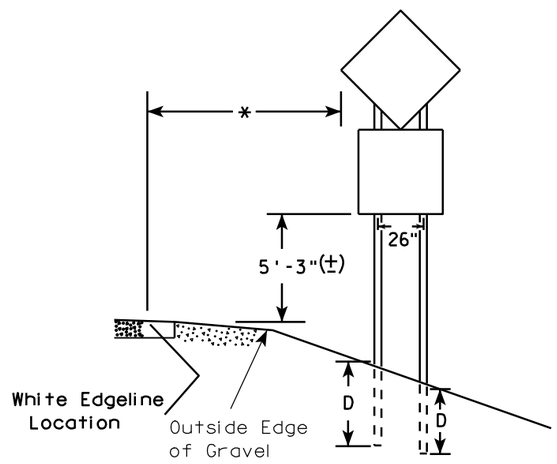

48" DIAMOND WARNING SIGN

GENERAL NOTES

1. For multiple post installations, individual post spacing shall be greater than 3'-6".
2. See tables below for required number of posts.
3. For expressways and freeways, mounting height is 7'-3" (±) or 6'-3" (±) depending upon existence of sub-sign.
4. The (±) tolerance for mounting height is 3 inches.
5. Minimum mounting height for J assemblies (A4-5) is 7'-3" (±) or 6'-3" (±) per urban or rural detail respectively.
6. Offset distance shall be consistent with existing signs or consistent throughout length of project.
7. Folding stop signs (R1-1F) shall be mounted at a height of 5'-3" (±) or as directed by the engineer.
8. The Double Arrow sign (W12-1) shall be mounted at a height of 2'-3" (±). The Chevron sign (W1-8), Roundabout Chevron panel (R6-4B), Clearance Markers (W5-52), Mile Markers (D10 series) & End of Road Markers (W5-56 & W5-56A) shall be mounted at a height of 4"-3" (±).

* 6 feet from edge of a paved shoulder or 12 feet from the edge of pavement (edge line location) or 2 feet from outside edge of gravel, whichever is greater unless directed by project engineer.

** The existence of curb and gutter does not in itself mandate the vertical clearance illustrated. That height is typically measured where there is sidewalk adjacent to the roadway or parking is permitted. In the absence of sidewalk vertical clearance is measured from the top of the curb. Offset of signs is measured from the flow line.

*** See A4-3 sign plate for signs 4' or less in width or 20 S.F. or less in area.

SIGN SHAPE OTHER THAN DIAMOND (TWO POSTS REQUIRED)	
L	E
*** Greater than 48" Less than 60"	12"
60" to 120"	L/5

SIGN SHAPE OTHER THAN DIAMOND (THREE POSTS REQUIRED)	
L	E
Greater than 120" less than 168"	12"

SIGN SHAPE OTHER THAN DIAMOND (FOUR POSTS REQUIRED)	
L	E
168" and greater	12"

POST EMBEDMENT DEPTH

Area of Sign Installation (Sq. Ft.)	D (Min)
20 or Less	4'
Greater than 20	5'

TYPICAL INSTALLATION OF TYPE II SIGNS ON MULTIPLE POSTS

WISCONSIN DEPT OF TRANSPORTATION

APPROVED Matthew R Rauch
for State Traffic Engineer

DATE 9/21/2011 PLATE NO. A4-4.11

PROJECT NO:	HWY:	COUNTY:		SHEET NO: 160	E

GROUND MOUNTED SIGN

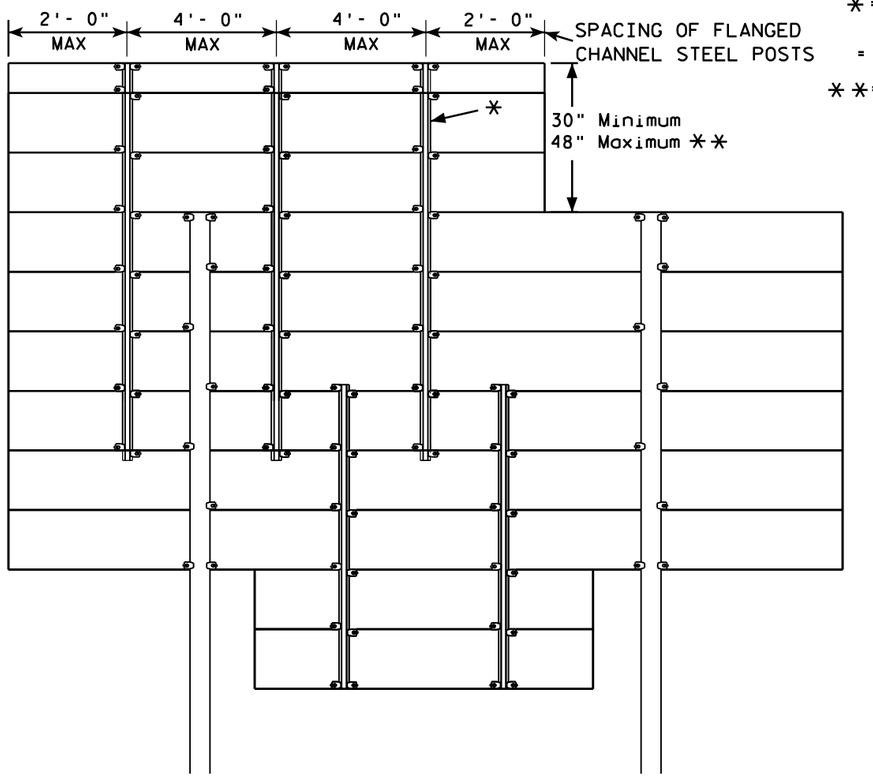

*=2.00 lb/ft FLANGED CHANNEL, MIN. YIELD STRENGTH = 60,000 PSI (GRADE 60) GALVANIZED

**=FOR 48" HEIGHT PANELS ON OVERHEAD STRUCTURES, ENTIRE SIGN SHALL BE CENTERED VERTICALLY ABOUT THE DEPTH OF THE TRUSS.

FLANGE CHANNEL DETAIL

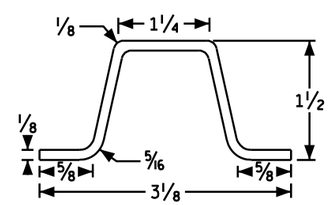

NOT TO SCALE

SIGN BRIDGE MOUNTED SIGN

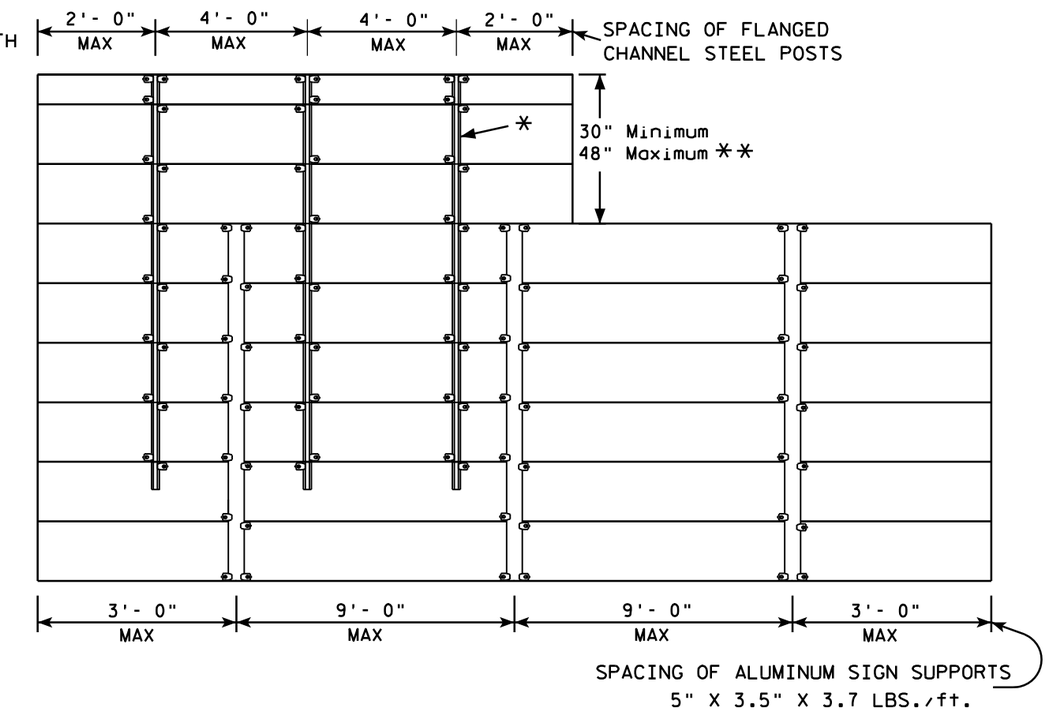

GENERAL NOTES

1. Flanged channel steel posts shall conform to size and material above, and shall be considered as incidental to other items in the contract.
2. Number of Flanged channel steel supports varies with length of panel and shall be spaced as shown:

   PANEL LENGTH 8'-0" OR LESS = 2 CHANNELS
   PANEL LENGTH 9'- 0" - 12'- 0" = 3 CHANNELS
   PANEL LENGTH 13'- 0" OR MORE = 4 CHANNELS

   If the flanged channel steel posts can not be horizontally spaced as shown, they can be moved so as to securely hold the sign.
3. The EXIT NUMBER PANEL shall normally be positioned above the guide sign aligned with the right edge of the guide sign. If the guide sign indicates a left exit, the EXIT NUMBER PANEL shall be aligned with the left edge of the guide sign.
4. If the bolt holes in the top panel (EXIT NUMBER), or sub panel (NEXT EXIT) line up with holes in main sign panel, stitch bolts shall be used in addition to the channels.
5. Provide post clips for each sign as shown. (Please note the differences between a ground mounted versus Sign bridge mounted sign as far as number of clips required on the main supports or beams)

ATTACHMENT OF GUIDE SIGNS TO SUPPORTS

WISCONSIN DEPT OF TRANSPORTATION

APPROVED Matthew R Rauch for State Traffic Engineer

DATE 6/7/10 PLATE NO. A4-6.11

PROJECT NO: | SHEET NO: 161 | E

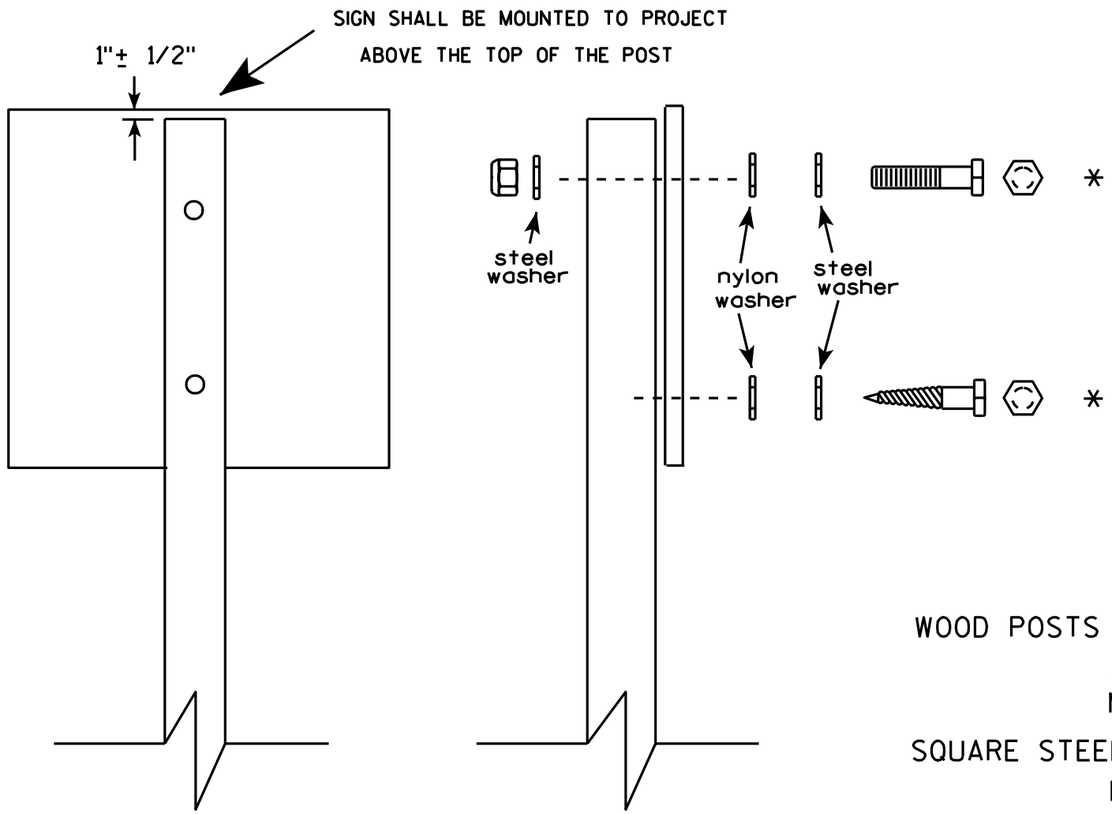

Nuts, bolts and lags used for mounting signs shall have hexagonal heads and shall be either :

a. Hot dip galvanized in accordance with ASTM Designation: A 153, Class D, or SC 3

b. Electro-galvanized in accordance with ASTM Designation : B 633, TYPE III, SC 3.

Threads on bolts and nuts shall be manufactured with sufficient allowance for the cadmium plate or galvanized coating to permit the nuts to run freely on the bolts.

WOOD POSTS (4" x 4" or 4" x 6")

LAG SCREWS - 3/8" X 3"

MACHINE BOLTS - 5/16" X 6-1/2" or 7" Length w/ nuts

SQUARE STEEL POSTS (2" x 2")

MACHINE BOLTS - 3/8" X 3-1/4" Length w/ nuts

RIVETS - 9/32" (6605-9-6) BULB-TITE, TRI-FOLD, ALUMINUM BODY/MANDREL O.D. FLANGE .720-.765 INCH, GRIP RANGE .042-.375 INCH

WASHERS (ALL POSTS) -

1-1/4" O.D. X 3/8" I.D. X 1/16" STEEL

1-1/4" O.D. X 3/8" I.D. X .080 NYLON for all Type H signs.

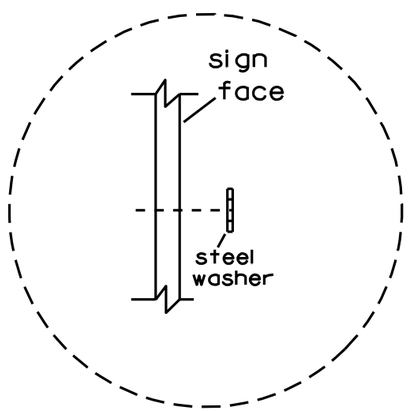

Washer Placement when Sign Has Other Than Type H or Type F Face

* Two different fastening systems are shown for illustration purposes. On any individual sign, either one or the other system shall be used. Actual number of fasteners per sign varies with the sign area, but normally there are two. For a single post installation, all signs greater than 9 sq. ft. require the use of 3 fasteners.

ATTACHMENT OF SIGNS TO POSTS

WISCONSIN DEPT OF TRANSPORTATION

APPROVED Matthew R Rauch
for State Traffic Engineer

DATE 3/23/10 PLATE NO. A4-8.7

TELESCOPIC TUBING ANCHORS
TWO PIECE SYSTEM

2 1/4" SQUARE
12 GAUGE
PERFORATED
GALVANIZED FINISH

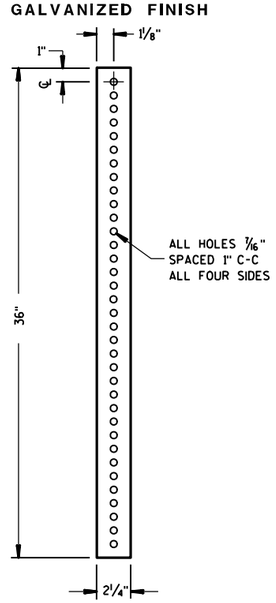

2 1/2" SQUARE
12 GAUGE
OMNI-DIRECTIONAL
PERFORATED
SOIL STABILIZING SLEEVE
GALVANIZED FINISH

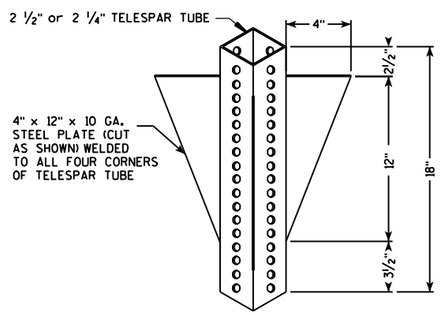

DETAIL OF TUBULAR STEEL SIGN POST
(IN POURED CONCRETE OR ASPHALT)

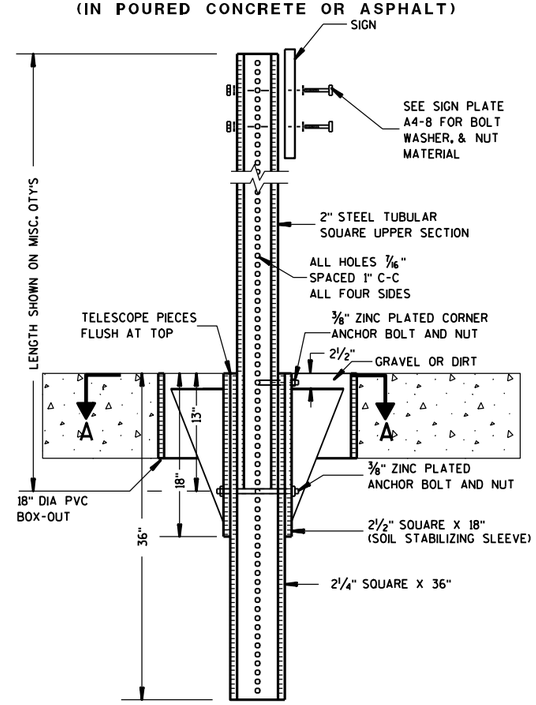

DETAIL OF TUBULAR STEEL SIGN POST
(IN LOCATIONS OTHER THAN POURED CONCRETE OR ASHALT)

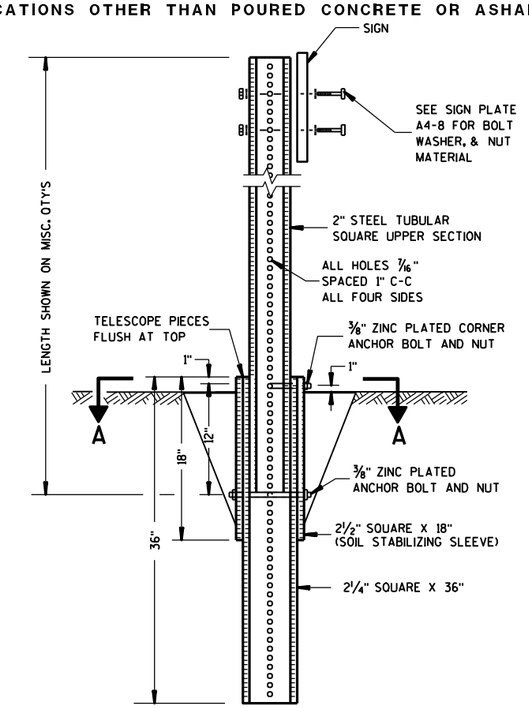

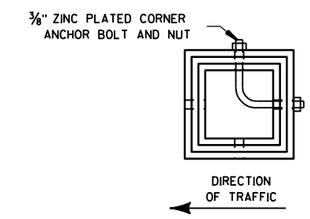

SECTION A-A

Area of Sign Installation (Sq. Ft.)	Number of Required Posts
9 or less	1
Greater than 9 less than or equal to 18	2
Greater than 18 less than or equal to 27	3

Signs wider than 3 feet or larger than 9 sq. ft shall be mounted on multiple posts (see above table).

TUBULAR STEEL
SIGN POST
A4-9

WISCONSIN DEPT OF TRANSPORTATION

APPROVED Matthew R Rauch
for State Traffic Engineer
DATE 5/30/12 PLATE NO. A4-9.7

7

7

PROJECT NO:	HWY:	COUNTY:		SHEET NO: 163	E

Extruded Shape

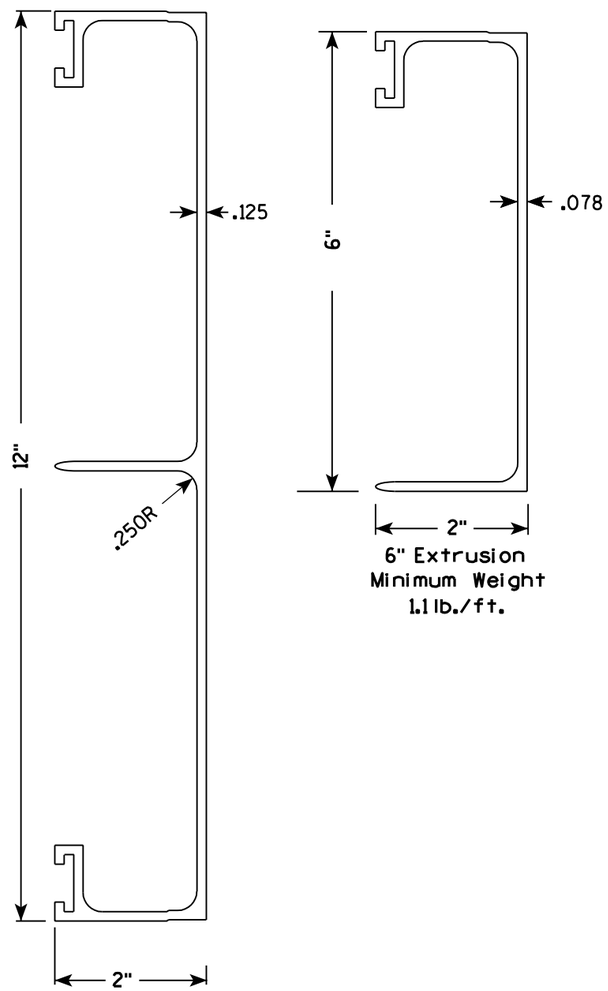

6" Extrusion
Minimum Weight
1.1 lb./ft.

12" Extrusion
Minimum Weight
2.45 lb./ft.

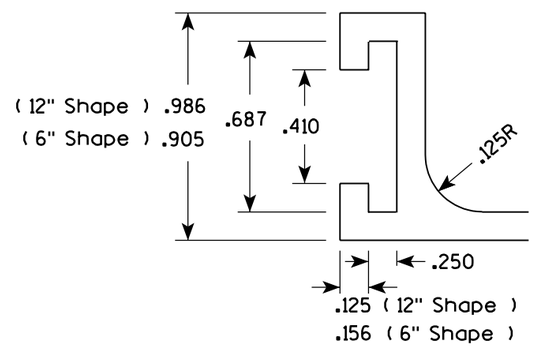

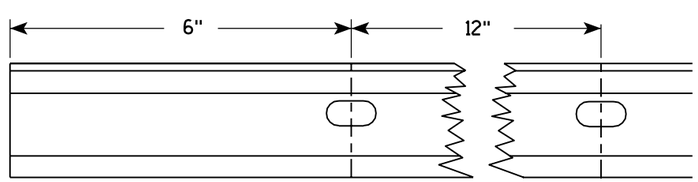

Punch 7/16" x 7/8" oval holes beginning 6" in from end of extrusion 12" CC on both edges of 6" and 12" panels.

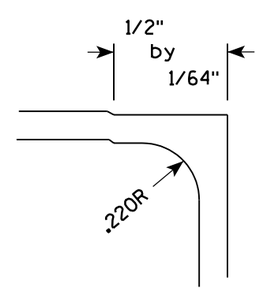

Hardware

STITCH BOLT, WASHER & NUT

The hardware includes:

- 3/8 " - 16 X 3/4 " Economy Bolt 2024-T4 alloy
- 3/8 " - Stainless steel stop nut
- 3/8" X .064 Flat Washers, Alclad 2024-T4 alloy

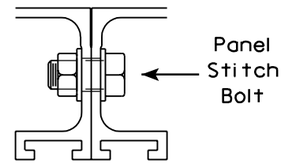

POST CLIP, POST CLIP BOLT, WASHER & NUT

Post Clip shall be Alum. Alloy 356-T6
Post Clip Bolt shall be Stainless Steel.
Flat washer shall be 3/8" X .091, Stainless Steel.
Stop nut shall be stainless steel.

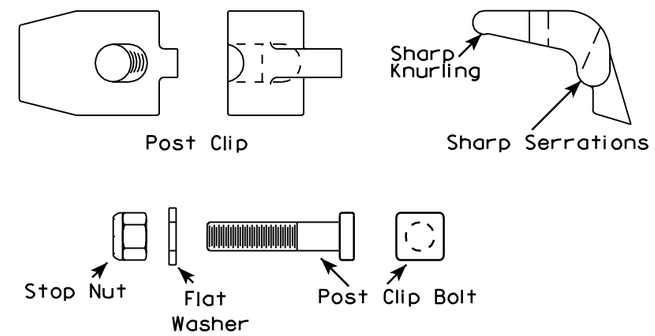

NOTES

1. The contractor may select any brand of extrusion that conforms to the illustrations or meets with the approval of the engineer, but all extrusions used on this contract shall be of the same brand.
2. Panel Stitch Bolts shall be used to assemble adjacent panels. Maximum stitch bolt spacing shall be 24" C-C, and a minimum of 4 bolts shall be used to connect any two extrusions.
3. Post Clips shall be used to attach the sign panel to the sign support.

7

7

ALUMINUM EXTRUSIONS FOR TYPE I SIGNS

WISCONSIN DEPT OF TRANSPORTATION

APPROVED Chester J Spang
for State Traffic Engineer

DATE 11/18/99 PLATE NO. A5-2.9

PROJECT NO:

SHEET NO: 164 E

BRACE BANDING

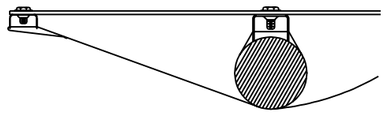

DETAIL C
CADMIUM PLATED STEEL BOLT
THROUGH BLACK BORDER

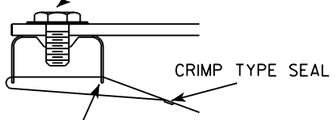

DETAIL C

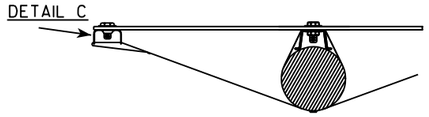

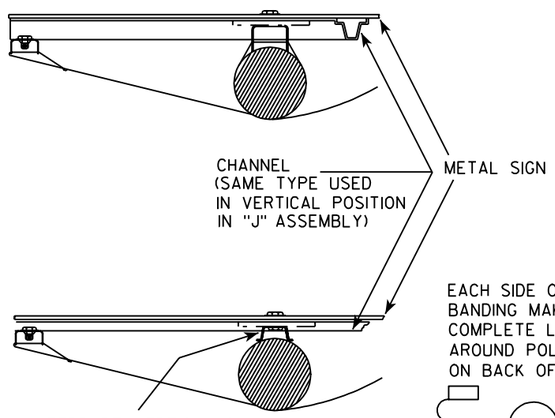

EACH SIDE OF BRACE
BANDING MAKES ONE
COMPLETE LOOP
AROUND POLE-SEAL
ON BACK OF POLE

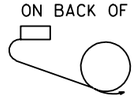

INTERRUPT VERTICAL CHANNEL
AT HORIZONTAL STIFFENERS

BRACKET BANDING

SINGLE SIGN

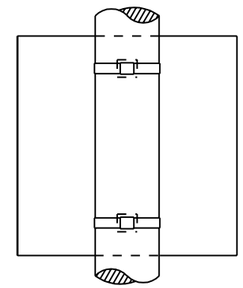

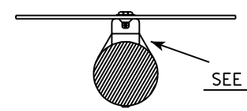

SEE DETAIL A

"J" ASSEMBLY

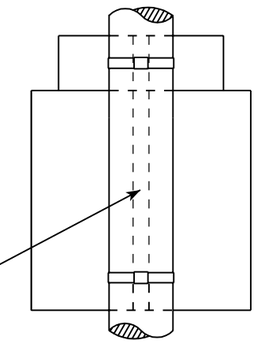

CHANNEL
SEE TYPICAL PANEL
INSTALLATION SHEET

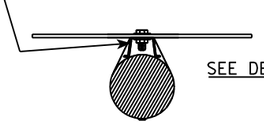

SEE DETAIL B

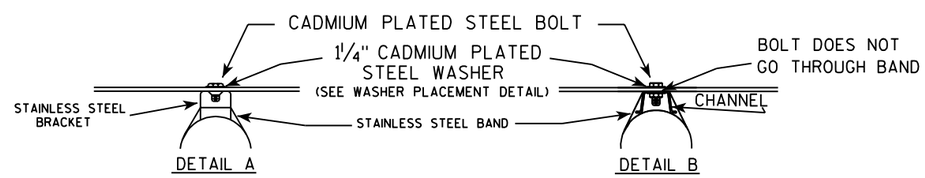

GENERAL NOTES

1. Signs 4' or greater in width shall have one brace band installed at the center of the sign.
2. Signs 3' or greater in height shall have three bracket bands installed. Signs less than 3' in height shall have two bracket bands installed.
3. Banding and assembly bracket shall be stainless steel. All bands shall be ¾" in width and 0.025" thickness.

WASHER PLACEMENT

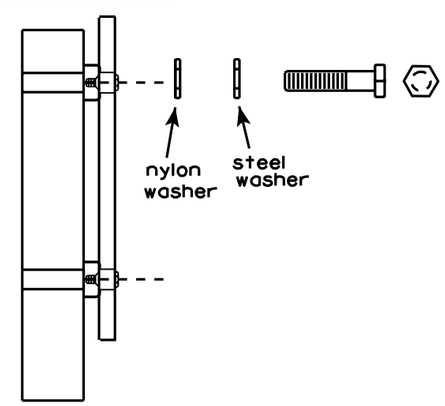

WASHERS (ALL POSTS) -
1-1/4" O.D. X 3/8" I.D. X 1/16" STEEL
1-1/4" O.D. X 3/8" I.D. X .080 NYLON
FOR ALL TYPE H SIGNS

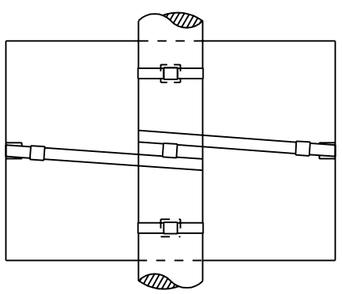

BRACE BANDING

BRACE BANDING SHALL BE TIGHTENED FIRMLY BUT NOT SO TIGHT AS TO APPRECIABLY CURVE FACE OF SIGN.

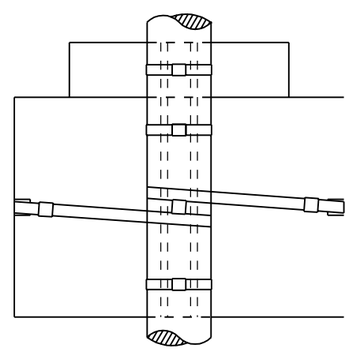

STANDARD SIGN
SIGN BANDING DETAILS

WISCONSIN DEPT OF TRANSPORTATION

APPROVED Matthew R Rauch
for State Traffic Engineer

DATE 11/08/05 PLATE NO. A5-9.2

PROJECT NO:	HWY:	COUNTY:		SHEET NO: 165	E

NOTES

1. Sign is Type II - Type H Reflective - reference WIS DOT Standard Specification for HIGHWAY and STRUCTURE CONSTRUCTION latest edition.
2. Color:
   Background - White
   Message - (See Note 5)
3. Message Series - (See Note 6)
4. Corners may be square or rounded when base material is plywood but borders shall be rounded as shown. When base material is metal, the corners and borders shall be rounded.
5. Border - Blue
   Line 1 - Red
   Line 2 - Black
   Line 3-5 - Blue
6. Line 1 - Dutch 8011L
   Line 2 - Series E
   Line 3-5 - Series C
7. Contractor shall provide and install a new post bracket in accordance with the I55-56B sign detail.

Background Colors of Symbol*

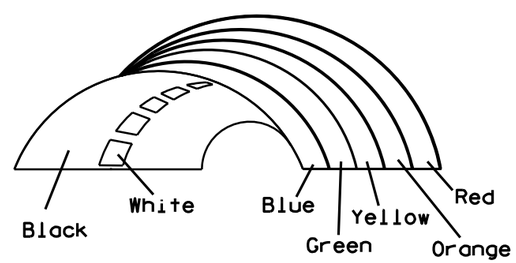

*1/4" Black Border between each color of rainbow and border of rainbow

SIZE	A	B	C	D	E	F	G	H	I	J	K	L	M	N	O	P	Q	R	S	T	U	V	W	X	Y	Z	Area sq. ft.
1																											
2	30	36	1 1/2	1/2	5/8	3	2	3 1/2	2 7/8	1	8	2 1/8	11 1/4	11 1/8	9 3/8	1 1/4		3/4	12 5/8	7 1/2							7.5
3																											
4																											
5																											

STANDARD SIGN
I55-56

WISCONSIN DEPT OF TRANSPORTATION

APPROVED Matthew R Rauch
for State Traffic Engineer

DATE 4/27/11 PLATE NO. 155-56.3

PROJECT NO: | HWY: | COUNTY: | SHEET NO: 166

ISOMETRIC VIEW

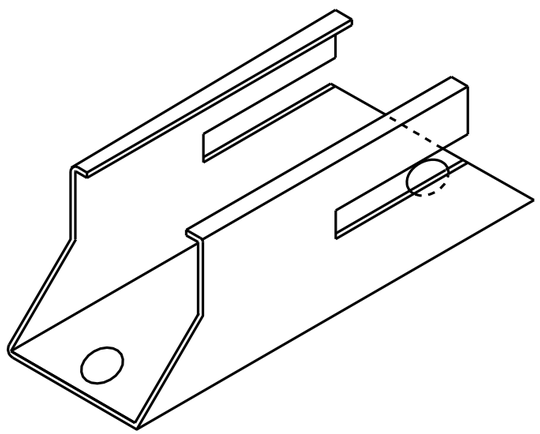

TOP VIEW

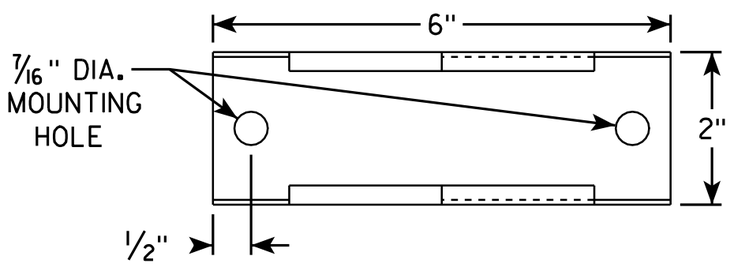

SIDE VIEW

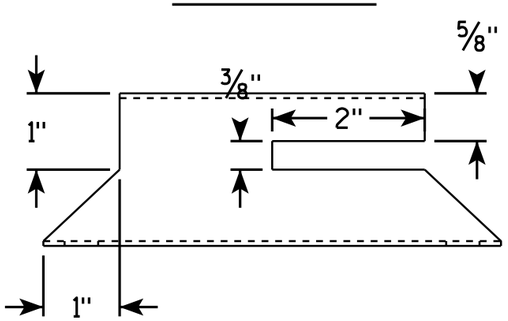

END VIEW

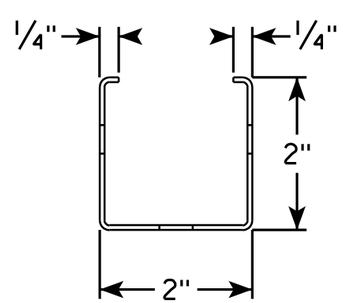

NOTES

1. Must be capable of permanent attachment to a wood or steel channel sign post utilizing the fastening hardware specified on the A4-8 sign plate.
2. Shall be entirely primed and painted with two coats of a black powder coated enamel paint.
3. Shall be made with 12 gauge steel, and incorporate no welds, no hinged components, no threaded lock-type components, and no parts which are loose or can be separated from the main body.
4. Shall have rounded edges with at least 1/8" radii.
5. Shall not have unrounded and uncoated metal edges which can contact the back surface of the roll-up sign.
6. Top of bracket shall be mounted 2' below the bottom of the I55-56 sign.
7. Cost of bracket and fastening hardware shall be incidental to the I55-56 sign.

SIDE VIEW

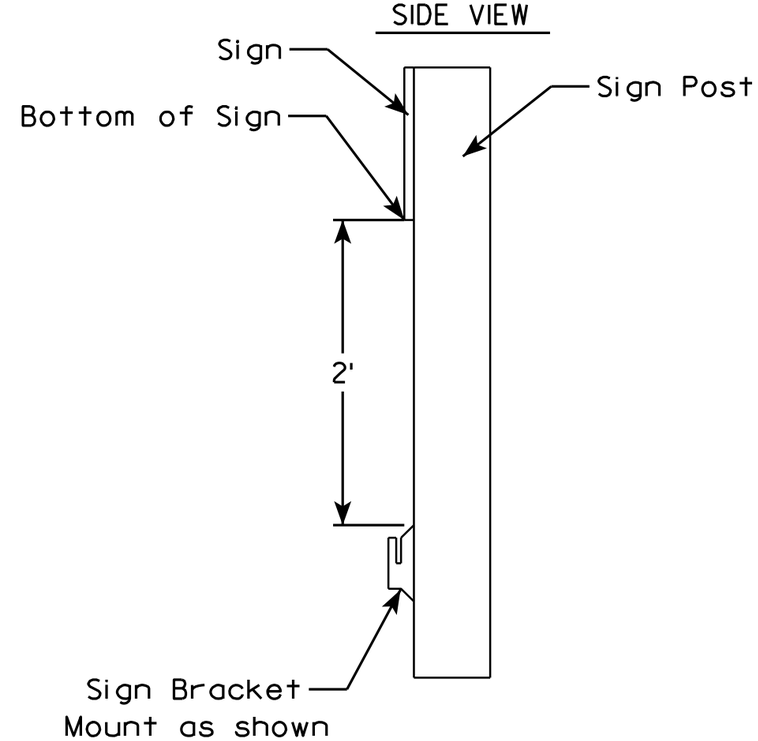

ROLLUP SIGN BRACKET
I55-56B

WISCONSIN DEPT OF TRANSPORTATION

APPROVED Matthew R Rauch
for State Traffic Engineer

DATE 2/5/10 PLATE NO. I55-56B.1

PROJECT NO:	HWY:	COUNTY:		SHEET NO: 167	E

NOTES

1. Sign is Type II - See Note 6 - reference WIS DOT Standard Specification for HIGHWAY and STRUCTURE CONSTRUCTION latest edition.
2. Color:
   Background - White & Black - See Note 6
   Message - Black
3. Message Series - See note 5
4. Corners may be square or rounded when base material is plywood but borders shall be rounded as shown. When base material is metal, the corners and borders shall be rounded.
5. Substitute appropriate numerals and adjust spacing as per Plate A10-1.
6. Permanent Signs
   Background - Type H Reflective
   Detour or other temporary signs
   Background - Reflective

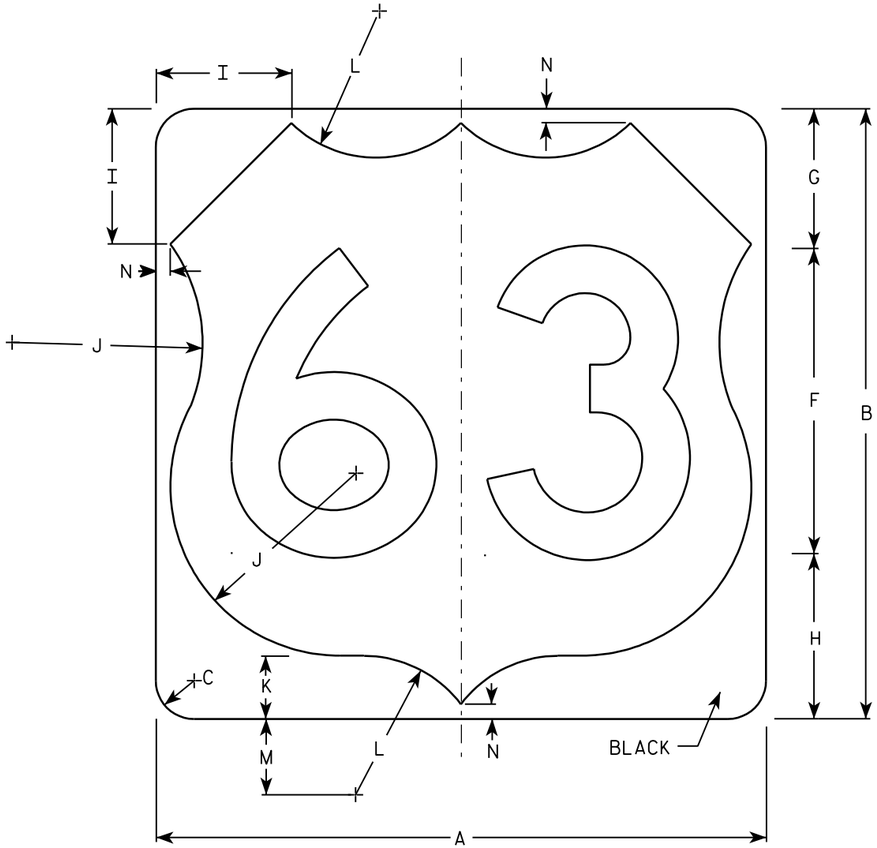

M1-4

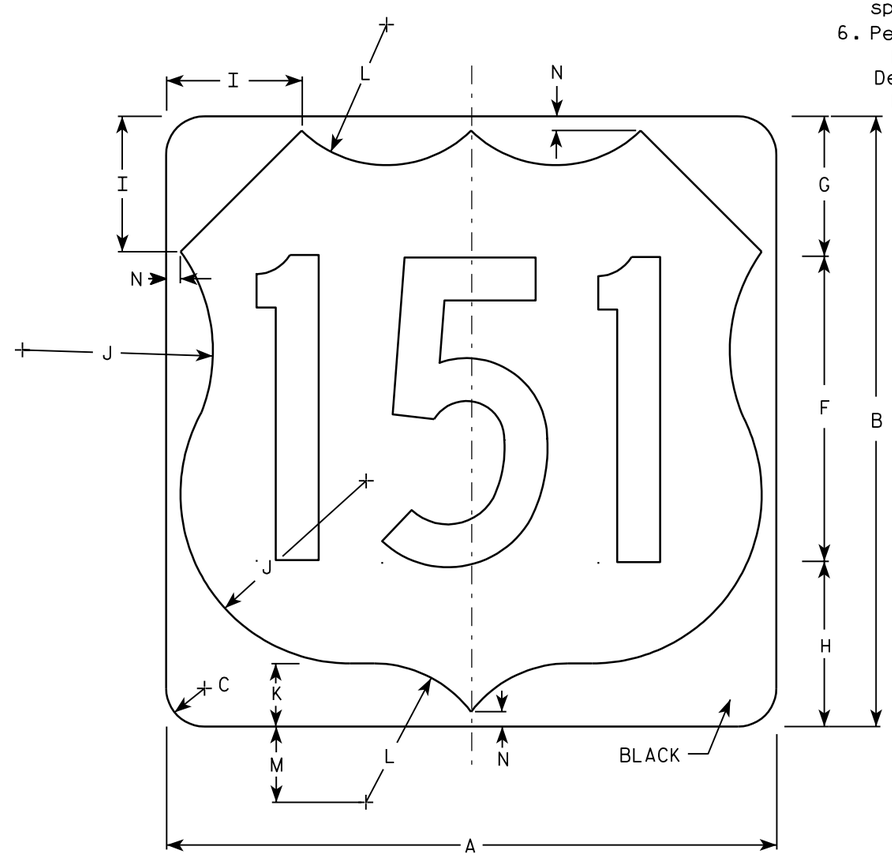

M1-4

Metric equivalent for this sign is:

SIZE	
1	
2	600 mm X 600 mm
3	900 mm X 900 mm
4	900 mm X 900 mm
5	900 mm X 900 mm

SIZE	A	B	C	D	E	F	G	H	I	J	K	L	M	N	O	P	Q	R	S	T	U	V	W	X	Y	Z	Area sq. ft.	Area m2
1																												
2	24	24	1 1/2			12	5 1/2	6 1/2	5	7 1/2	2 1/2	5 1/2	3	1/2													4.0	.36
3	36	36	2 1/4			18	8 1/4	9 1/4	7 1/4	11 1/4	3 3/4	8 1/4	4 1/2	3/4													9.0	.81
4	36	36	2 1/4			18	8 1/4	9 1/4	7 1/4	11 1/4	3 3/4	8 1/4	4 1/2	3/4													9.0	.81
5	36	36	2 1/4			18	8 1/4	9 1/4	7 1/4	11 1/4	3 3/4	8 1/4	4 1/2	3/4													9.0	.81

USH MARKER
M1-4 FOR ASSEMBLIES

WISCONSIN DEPT OF TRANSPORTATION

APPROVED Matthew R Rauch
for State Traffic Engineer

DATE 08/25/05 PLATE NO. M1-4.9

PROJECT NO: | HWY: | COUNTY: | SHEET NO: 168 | E

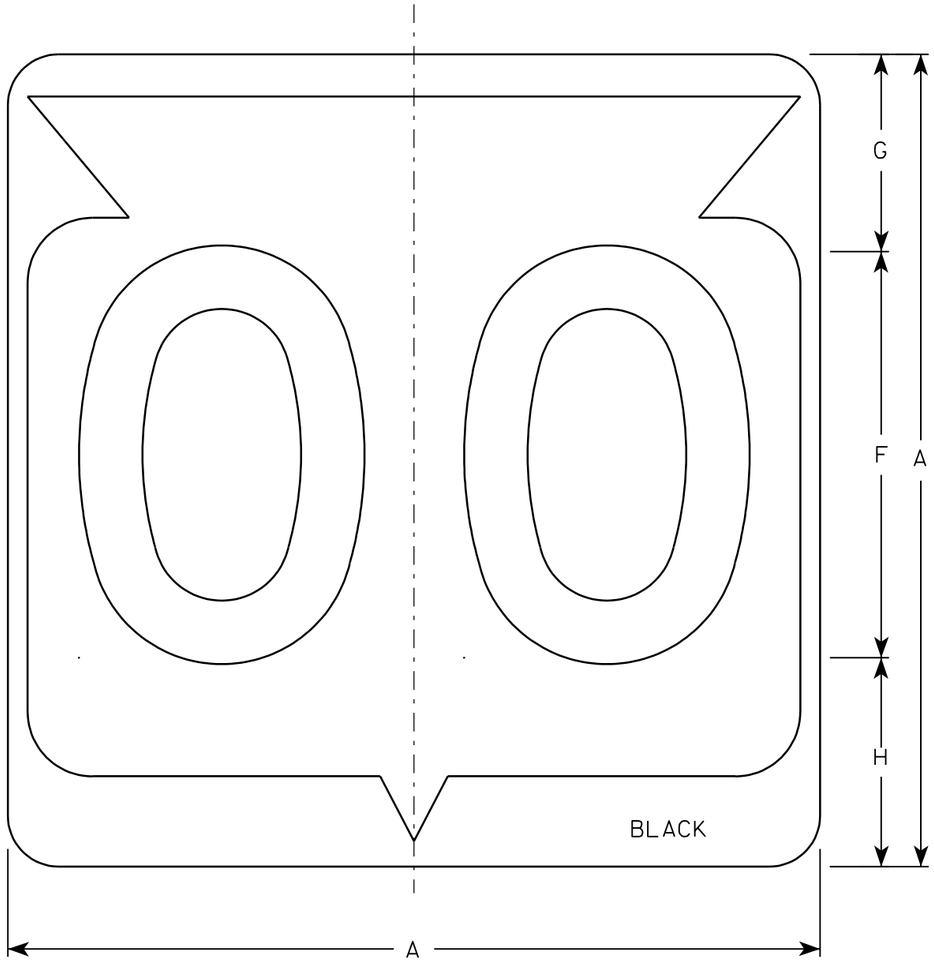

M1-6

NOTES

1. Sign is Type II - See Note 6 - reference WIS DOT Standard Specification for HIGHWAY and STRUCTURE CONSTRUCTION latest edition.
2. Color:
   Background - White & Black - See Note 6
   Message - Black
3. Message Series - See note 5
4. Corners may be square or rounded when base material is plywood but borders shall be rounded as shown. When base material is metal, the corners and borders shall be rounded.
5. Substitute appropriate Series numerals and adjust spacing as per plate A10-1.
6. Permanent Signs
   Background - Type H Reflective
   Detour or temporary Signs
   Background - Reflective

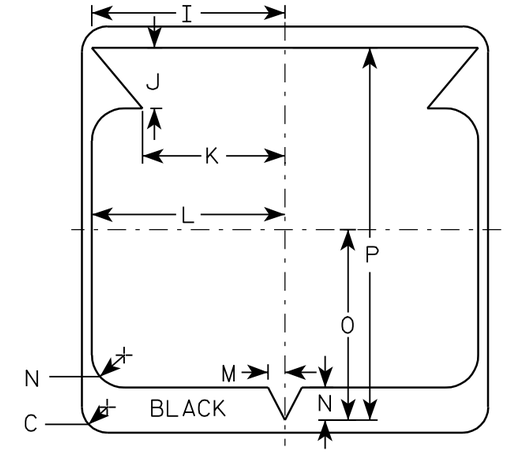

Metric equivalent for this sign is:

SIZE	
1	
2	600 mm X 600 mm
3	900 mm X 900 mm
4	900 mm X 900 mm
5	900 mm X 900 mm

SIZE	A	B	C	D	E	F	G	H	I	J	K	L	M	N	O	P	Q	R	S	T	U	V	W	X	Y	Z	Area sq. ft.	Area m2
1																												
2	24		1 1/2			12	5 1/2	6 1/2	10 1/4	2 1/2	8 7/8	11 1/2	1	1 7/8	11 1/4	21 7/8											4.0	.36
3	36		2 1/4			18	8 3/4	9 1/4	15 3/8	5 3/8	12 5/8	17 1/8	1 1/2	2 7/8	16 7/8	33											9.0	.81
4	36		2 1/4			18	8 3/4	9 1/4	15 3/8	5 3/8	12 5/8	17 1/8	1 1/2	2 7/8	16 7/8	33											9.0	.81
5	36		2 1/4			18	8 3/4	9 1/4	15 3/8	5 3/8	12 5/8	17 1/8	1 1/2	2 7/8	16 7/8	33											9.0	.81

STATE ROUTE MARKER
M1-6 FOR ASSEMBLIES

WISCONSIN DEPT OF TRANSPORTATION

APPROVED Chester J Spang
for State Traffic Engineer

DATE 3/20/02 PLATE NO. M1-6.9

PROJECT NO: | HWY: | COUNTY: | SHEET NO: 169 | E

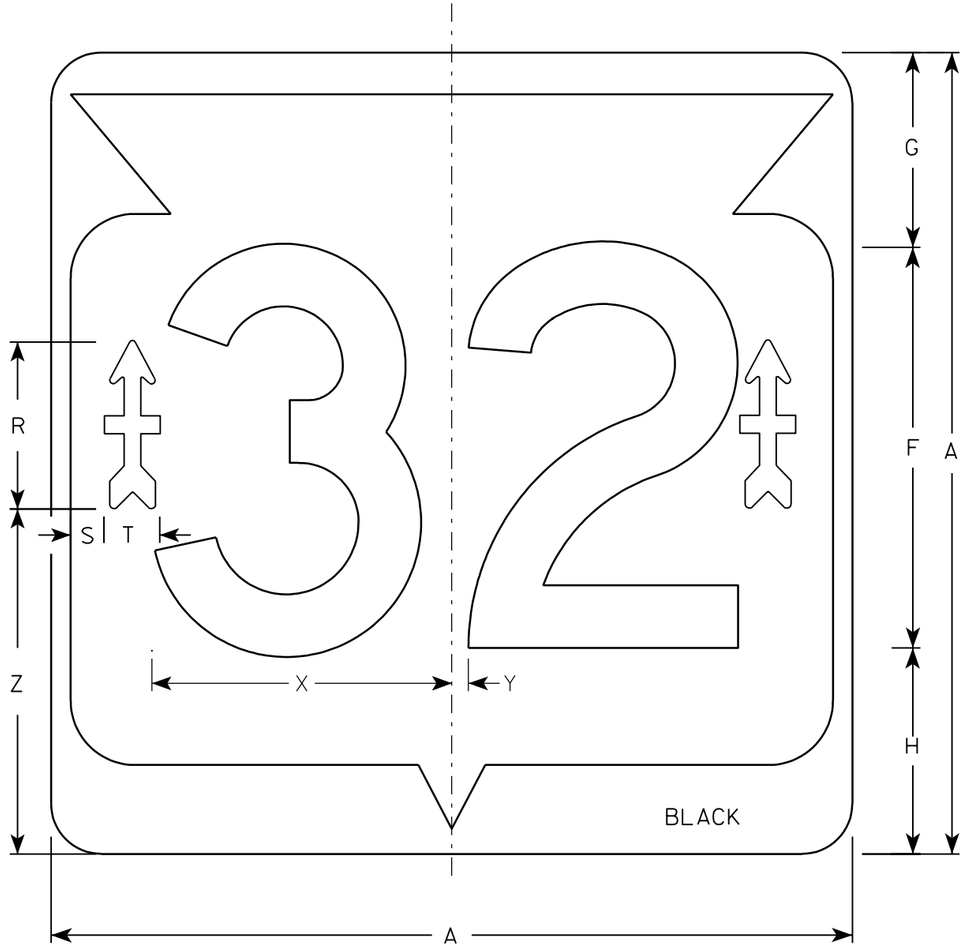

M1-6B

NOTES

1. Sign is Type II - Type H - reference WIS DOT Standard Specification for HIGHWAY and STRUCTURE CONSTRUCTION latest edition.
2. Color:
   Background - White & Black
   Message - Black
   Arrow - Type H Reflective Red
3. Message Series - D
4. Corners may be square or rounded when base material is plywood but borders shall be rounded as shown. When base material is metal, the corners and borders shall be rounded.

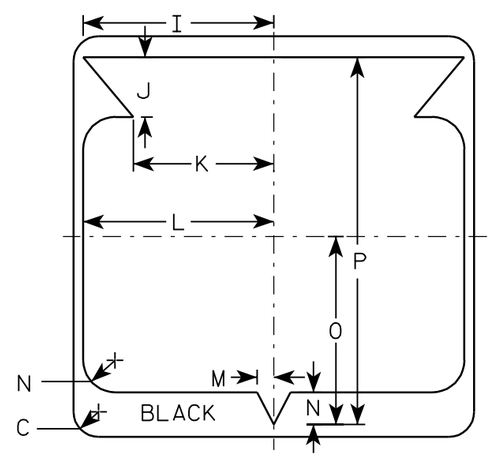

32nd DIVISION ARROW
ACTUAL SIZE

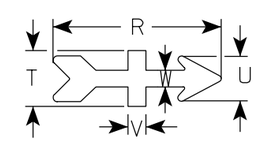

Metric equivalent for this sign is:

SIZE	
1	
2	600 mm X 600 mm
3	900 mm X 900 mm
4	900 mm X 900 mm
5	900 mm X 900 mm

SIZE	A	B	C	D	E	F	G	H	I	J	K	L	M	N	O	P	Q	R	S	T	U	V	W	X	Y	Z	Area sq. ft.	Area m2
1																												
2	24		1 1/2			12	5 1/2	6 1/2	10 1/4	2 1/2	8 7/8	11 1/2	1	1 7/8	11 1/4	21 7/8		5 1/8	3/4	1 7/8	1 1/2	5/8	5/8	9	1/2	10 1/2	4.0	.36
3	36		2 1/4			18	8 3/4	9 1/4	15 3/8	5 3/8	12 5/8	17 1/8	1 1/2	2 7/8	16 7/8	33		7 1/2	1 1/2	2 1/2	2	7/8	3/4	13 1/2	3/4	15 1/2	9.0	.81
4	36		2 1/4			18	8 3/4	9 1/4	15 3/8	5 3/8	12 5/8	17 1/8	1 1/2	2 7/8	16 7/8	33		7 1/2	1 1/2	2 1/2	2	7/8	3/4	13 1/2	3/4	15 1/2	9.0	.81
5	36		2 1/4			18	8 3/4	9 1/4	15 3/8	5 3/8	12 5/8	17 1/8	1 1/2	2 7/8	16 7/8	33		7 1/2	1 1/2	2 1/2	2	7/8	3/4	13 1/2	3/4	15 1/2	9.0	.81

STATE ROUTE MARKER "32"
M1-6B FOR ASSEMBLIES

WISCONSIN DEPT OF TRANSPORTATION

APPROVED Matthew R Rauch for State Traffic Engineer

DATE 12/5/05 PLATE NO. M1-6B.2

PROJECT NO: | HWY: | COUNTY: | SHEET NO: 170 | E

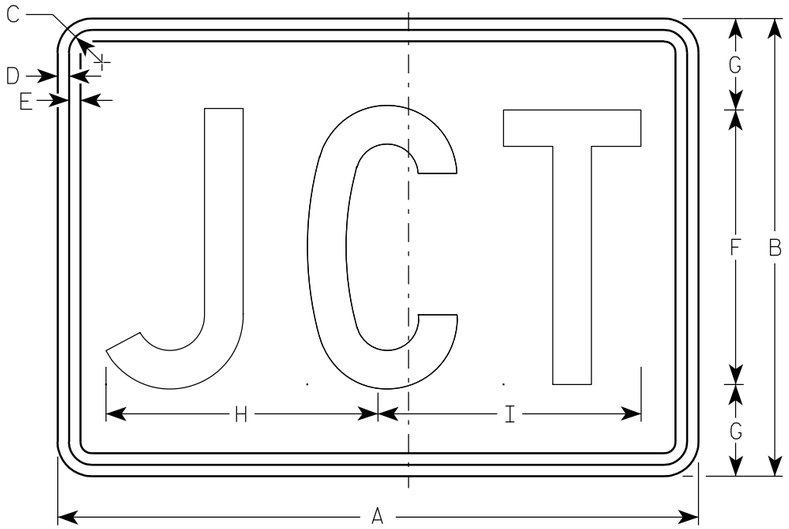

M2-1
MK2-1
MM2-1
MR2-1

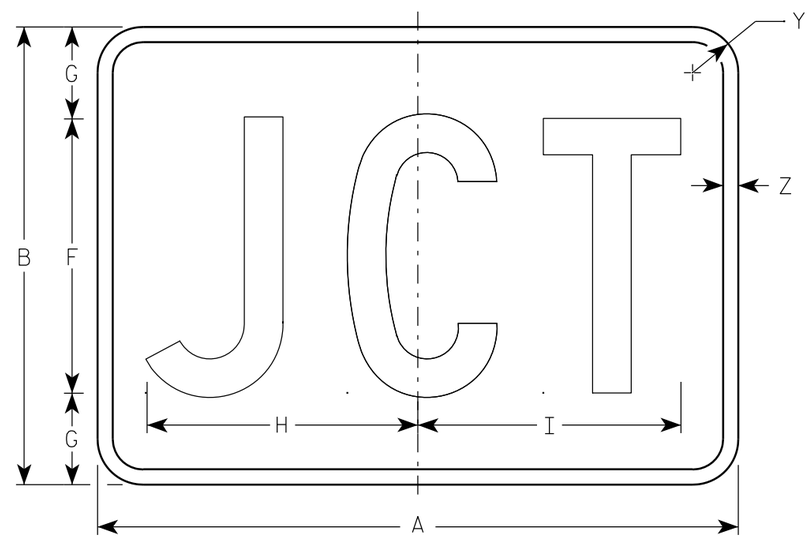

MB2-1
MG2-1
MN2-1

NOTES

1. Sign is Type II - See Note 5 - reference WIS DOT Standard Specification for HIGHWAY and STRUCTURE CONSTRUCTION latest edition.
2. Color:
   Background - See note 5
   Message - See note 5
3. Message Series - C
4. Corners may be square or rounded when base material is plywood but borders shall be rounded as shown. When base material is metal, the corners and borders shall be rounded.
5. M2-1 Background - White - Type H Reflective
   (Detour or temporary Signs - Reflective)
   Message - Black
   MB2-1 Background - Blue
   Message - White - Type H Reflective
   (Detour or temporary Signs - Reflective)
   MG2-1 Background - Green
   Message - White - Type H Reflective
   MK2-1 Background - Green
   Message - White - Type H Reflective
   MM2-1 Background - White - Type H Reflective
   Message - Green
   MN2-1 Background - Brown
   Message - White - Type H Reflective
   MR2-1 Background - Brown
   Message - Yellow - Type H Reflective

7

7

Metric equivalent for this sign is:

SIZE	
1	
2	525 mm X 375 mm
3	750 mm X 525 mm
4	750 mm X 525 mm
5	750 mm X 525 mm

SIZE	A	B	C	D	E	F	G	H	I	J	K	L	M	N	O	P	Q	R	S	T	U	V	W	X	Y	Z	Area sq. ft.	Area m2
1																												
2	21	15	1 1/8	3/8	3/8	9	3	8 7/8	8 5/8																1 1/2	1/2	2.20	0.20
3	30	21	1 1/8	3/8	3/8	13	4	12 7/8	12 3/8																1 1/2	1/2	4.40	0.20
4	30	21	1 1/8	3/8	3/8	13	4	12 7/8	12 3/8																1 1/2	1/2	4.40	0.20
5	30	21	1 1/8	3/8	3/8	13	4	12 7/8	12 3/8																1 1/2	1/2	4.40	0.20

STANDARD SIGN
M2-1

WISCONSIN DEPT OF TRANSPORTATION

APPROVED Matthew R Rauch
for State Traffic Engineer

DATE 3/16/10 PLATE NO. M2-1.10

PROJECT NO: | HWY: | COUNTY: | SHEET NO: 171 | E

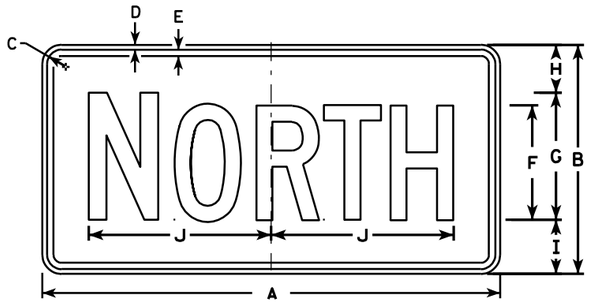

M3-1
MK3-1
MO3-1

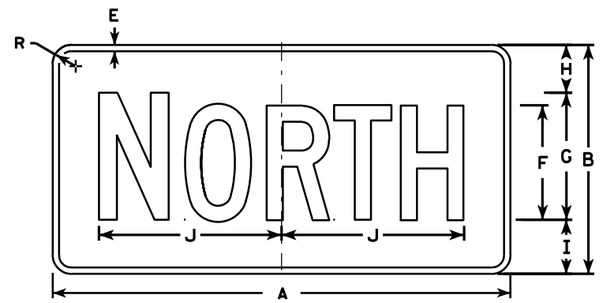

MB3-1
MG3-1
MM3-1
MN3-1

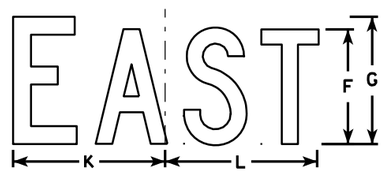

M3-2
MK3-2
MO3-2

MB3-2
MG3-2
MM3-2
MN3-2

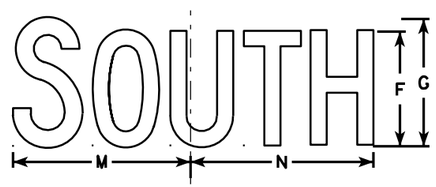

M3-3
MK3-3
MO3-3

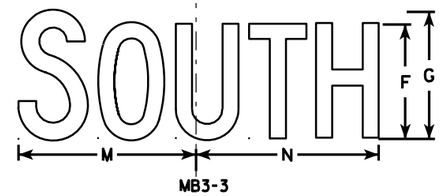

MB3-3
MG3-3
MM3-3
MN3-3

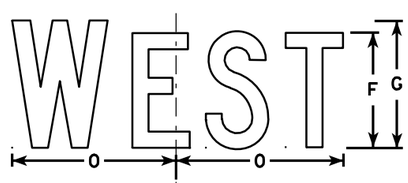

M3-4
MK3-4
MO3-4

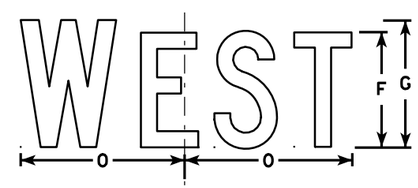

MB3-4
MG3-4
MM3-4
MN3-4

NOTES

1. All Signs Type II - See Note 5 - reference WIS DOT Standard Specification for HIGHWAY and STRUCTURE CONSTRUCTION latest edition.
2. Color:
   Background - See note 5
   Message - See note 5
3. Message Series - C
4. Corners may be square or rounded when base material is plywood but borders shall be rounded as shown. When base material is metal, the corners and borders shall be rounded.
5. M3-1 thru M3-4 Background - White - Type H Reflective
   (Detour or temporary signs - Reflective)
   Message - Black
   MB3-1 thru MB3-4 Background - Blue
   Message - White - Type H Reflective
   (Detour or temporary signs - Reflective)
   MG3-1 thru MG3-4 Background - Green
   Message - White - Type H Reflective
   MK3-1 thru MK3-4 Background - Green
   Message - White - Type H Reflective
   MM3-1 thru MM3-4 Background - White - Type H Reflective
   Message - Green
   MN3-1 thru MN3-4 Background - Brown
   Message - White - Type H Reflective
   MO3-1 thru MO3-4 Background - Orange - Reflective
   Message - Black
6. Note the first letter of each direction is larger than the remainder of the message.

SIZE	A	B	C	D	E	F	G	H	I	J	K	L	M	N	O	P	Q	R	S	T	U	V	W	X	Y	Z	Area sq. ft.
1																											
2	24	12	1 1/8	3/8	3/8	6	7	2 1/4	2 3/4	10 1/4	7 7/8	8 3/8	10 1/4	9 3/4	8 3/4			1 1/2									2.00
3	36	18	1 1/8	3/8	1/2	9	10	3 3/4	4 1/4	14 3/8	12	12 1/8	14	14 1/8	13			1 1/2									4.5
4	36	18	1 1/8	3/8	1/2	9	10	3 3/4	4 1/4	14 3/8	12	12 1/8	14	14 1/8	13			1 1/2									4.5
5	36	18	1 1/8	3/8	1/2	9	10	3 3/4	4 1/4	14 3/8	12	12 1/8	14	14 1/8	13			1 1/2									4.5

STANDARD SIGNS
M3-1 thur M3-4
SERIES

WISCONSIN DEPT OF TRANSPORTATION

APPROVED Matthew R Rauch
for State Traffic Engineer

DATE 11/10/10 PLATE NO. M3-1.12

PROJECT NO: | HWY: | COUNTY: | SHEET NO: 172 | E

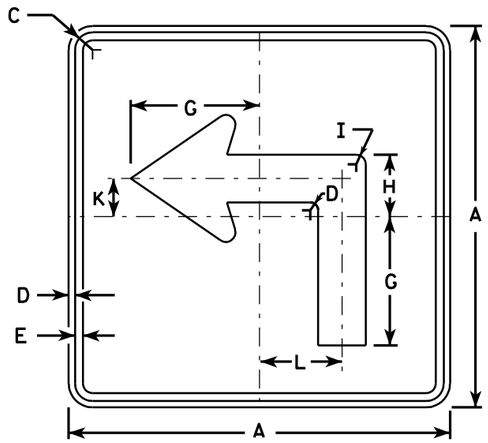

M5-1L
MK5-1L
MM5-1L
MO5-1L
MR5-1L

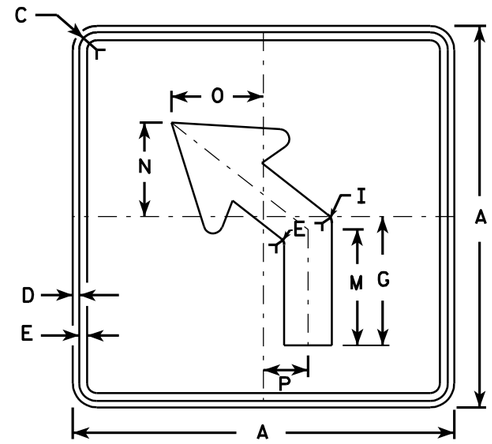

M5-2L
MK5-2L
MM5-2L
MO5-2L
MR5-2L

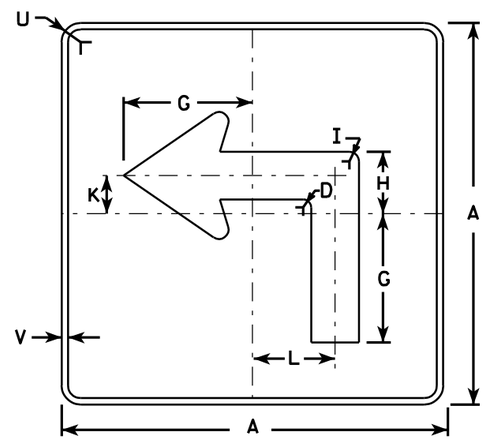

MB5-1L
MG5-1L
MN5-1L

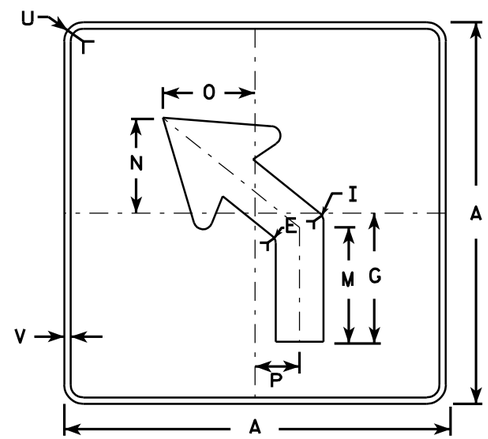

MB5-2L
MG5-2L
MN5-2L

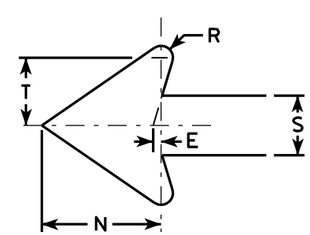

NOTES

1. Signs are Type II - See Note 4 - reference WIS DOT Standard Specification for HIGHWAY and STRUCTURE CONSTRUCTION latest edition.
2. Color:
   Background - See note 4
   Message - See note 4
3. Corners may be square or rounded when base material is plywood but borders shall be rounded as shown. When base material is metal, the corners and borders shall be rounded.
4. M5-1 and M5-2 Background - White - Type H Reflective (Detour or temporary Signs - Reflective) Message - Black
   MB5-1 and MB5-2 Background - Blue Message - White - Type H Reflective (Detour or temporary Signs - Reflective)
   MG5-1 and MG5-2 Background - Green Message - White - Type H Reflective
   MK5-1 and MK5-2 Background - Green Message - White Type H Reflective
   MM5-1 and MM5-2 Background - White - Type H Reflective Message - Green
   MN5-1 and MN5-2 Background - Brown Message - White - Type H Reflective
   MO5-1 and MO5-2 Background - Orange - Reflective Message - Black
   MR5-1 and MR5-2 Background - Brown Message - Yellow - Type H Reflective
5. M5-1R same as M5-1L except arrow points right.
6. M5-2R same as M5-2L except arrow tilts right.

Metric equivalent for this sign is:

SIZE	
1	
2	525 mm X 525 mm
3	750 mm X 750 mm
4	750 mm X 750 mm
5	750 mm X 750 mm

SIZE	A	B	C	D	E	F	G	H	I	J	K	L	M	N	O	P	Q	R	S	T	U	V	W	X	Y	Z	Area sq. ft.	Area m²
1																												
2	21		1 1/8	3/8	3/8		7	3 3/8	5/8		2 1/8	4 1/2	6 3/8	5 1/4	5	2 1/2		1/2	2 5/8	3	1 1/2	1/2					3.06	0.28
3	30		1 3/8	1/2	5/8		10 1/8	4 7/8	7/8		3	6 1/2	9 1/8	7 1/2	7 1/4	3 1/2		3/4	3 3/4	4 1/4	1 7/8	1/2					6.25	0.56
4	30		1 3/8	1/2	5/8		10 1/8	4 7/8	7/8		3	6 1/2	9 1/8	7 1/2	7 1/4	3 1/2		3/4	3 3/4	4 1/4	1 7/8	1/2					6.25	0.56
5	30		1 3/8	1/2	5/8		10 1/8	4 7/8	7/8		3	6 1/2	9 1/8	7 1/2	7 1/4	3 1/2		3/4	3 3/4	4 1/4	1 7/8	1/2					6.25	0.56

STANDARD SIGN
M5-1 & M5-2

WISCONSIN DEPT OF TRANSPORTATION

APPROVED Matthew R Rauch
for State Traffic Engineer

DATE 3/16/10 PLATE NO. M5-1.11

PROJECT NO: | HWY: | COUNTY: | SHEET NO: 173 | E

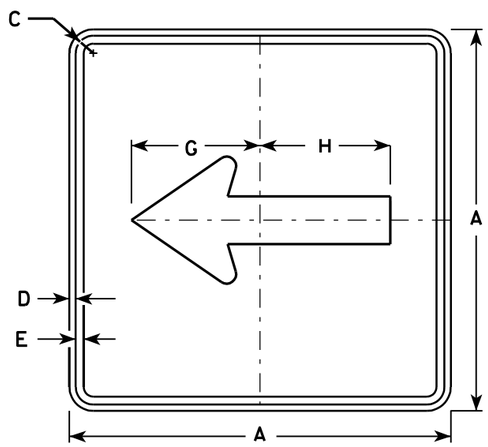

M6-1
MK6-1
MM6-1
MO6-1
MR6-1

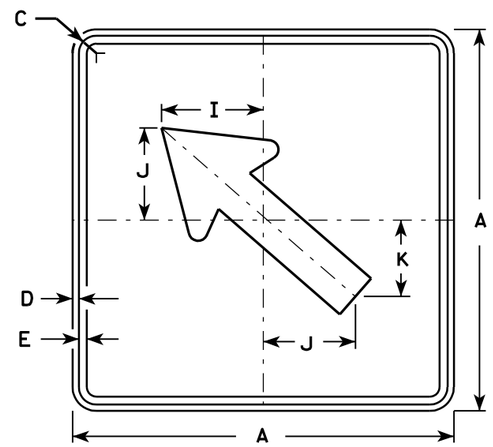

M6-2
MK6-2
MM6-2
MO6-2
MR6-2

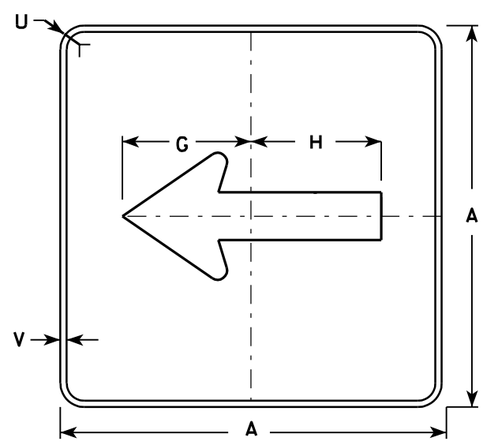

MB6-1
MG6-1
MN6-1

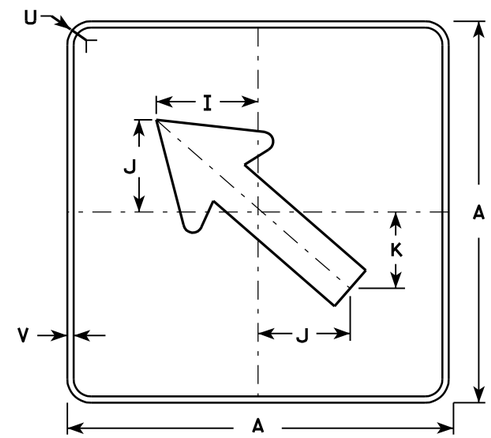

MB6-2
MG6-2
MN6-2

NOTES

1. Signs are Type II - See Note 4 - reference WIS DOT Standard Specification for HIGHWAY and STRUCTURE CONSTRUCTION latest edition.
2. Color:
   Background - See note 4
   Message - See note 4
3. Corners may be square or rounded when base material is plywood but borders shall be rounded as shown. When base material is metal, the corners and borders shall be rounded.
4. M6-1 and M6-2 Background - White - Type H Reflective
   (Detour or temporary Signs - Reflective)
   Message - Black
   MB6-1 and MB6-2 Background - Blue
   Message - White - Type H Reflective
   (Detour or temporary Signs - Reflective)
   MG6-1 and MG6-2 Background - Green
   Message - White - Type H Reflective
   MK6-1 and MK6-2 Background - Green
   Message - White - Type H Reflective
   MM6-1 and MM6-2 Background - White - Type H Reflective
   Message - Green
   MN6-1 and MN6-2 Background - Brown
   Message - White - Type H Reflective
   MO6-1 and MO6-2 Background - Orange - Reflective
   Message - Black
   MR6-1 and MR6-2 Background - Brown
   Message - Yellow - Type H Reflective

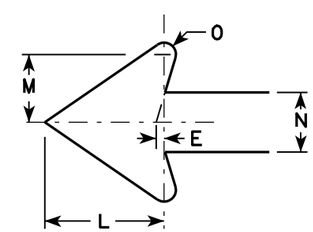

Metric equivalent for this sign is:

SIZE	
1	
2	525 mm X 525 mm
3	750 mm X 750 mm
4	750 mm X 750 mm
5	750 mm X 750 mm

SIZE	A	B	C	D	E	F	G	H	I	J	K	L	M	N	O	P	Q	R	S	T	U	V	W	X	Y	Z	Area sq. ft.	Area m2
1																												
2	21		1 1/8	3/8	3/8		7 1/2	7 1/8	5 5/8	5	4 1/4	5 1/4	3	2 5/8	1/2						1 1/2	1/2					3.06	0.28
3	30		1 3/8	1/2	5/8		10 3/4	10 1/4	8	7 1/4	6	7 1/2	4 1/4	3 3/4	3/4						1 7/8	1/2					6.25	0.56
4	30		1 3/8	1/2	5/8		10 3/4	10 1/4	8	7 1/4	6	7 1/2	4 1/4	3 3/4	3/4						1 7/8	1/2					6.25	0.56
5	30		1 3/8	1/2	5/8		10 3/4	10 1/4	8	7 1/4	6	7 1/2	4 1/4	3 3/4	3/4						1 7/8	1/2					6.25	0.56

STANDARD SIGN
M6-1 & M6-2
SERIES

WISCONSIN DEPT OF TRANSPORTATION

APPROVED Matthew R Rauch
for State Traffic Engineer

DATE 3/16/10 PLATE NO. M6-1.12

PROJECT NO:	HWY:	COUNTY:		SHEET NO: 174	E

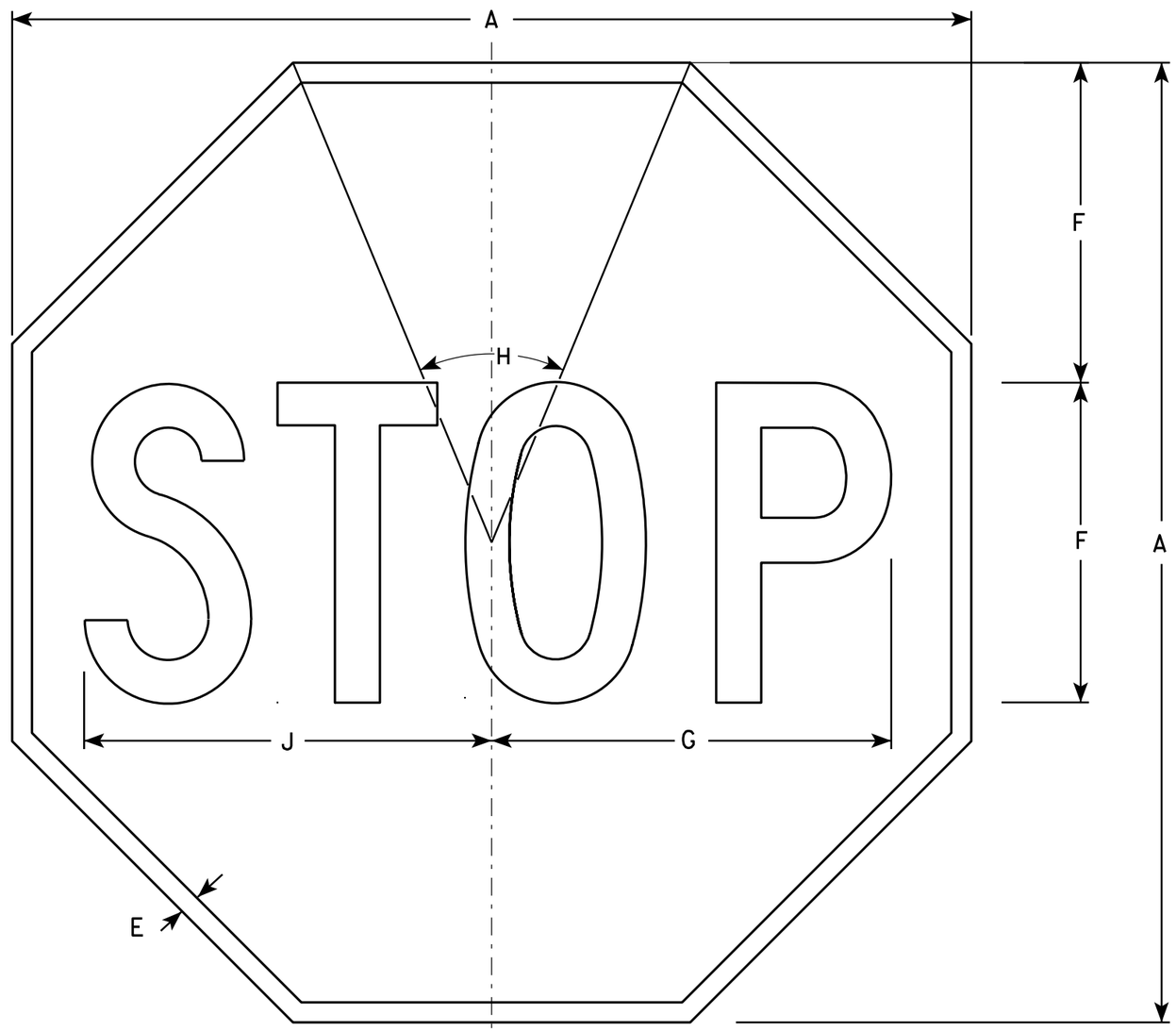

R1-1

NOTES

1. Sign is Type II - Type H Reflective - reference WIS DOT Standard Specification for HIGHWAY and STRUCTURE CONSTRUCTION latest edition.
2. Color:
   Background - Red
   Message - White
3. Message Series - C

SIZE	A	B	C	D	E	F	G	H	I	J	K	L	M	N	O	P	Q	R	S	T	U	V	W	X	Y	Z	Area sq. ft.
1	24				3/8	8	10	45°		10 1/4																	3.31
2S	30				5/8	10	12 1/2	45°		12 3/4																	5.18
2M	36				3/4	12	15	45°		15 3/8																	7.46
3	36				3/4	12	15	45°		15 3/8																	7.46
4	48				1	16	20	45°		20 1/2																	13.25
5	48				1	16	20	45°		20 1/2																	13.25
6	18				3/8	6	7 3/4	45°		7 3/4																	1.86
7	12				1/4	4	5	45°		5 1/8																	0.78

STANDARD SIGN
R1-1

WISCONSIN DEPT OF TRANSPORTATION

APPROVED Matthew R Rauch
for State Traffic Engineer

DATE 12/03/10 PLATE NO. R1-1.12

PROJECT NO: | HWY: | COUNTY: | SHEET NO: 175 | E

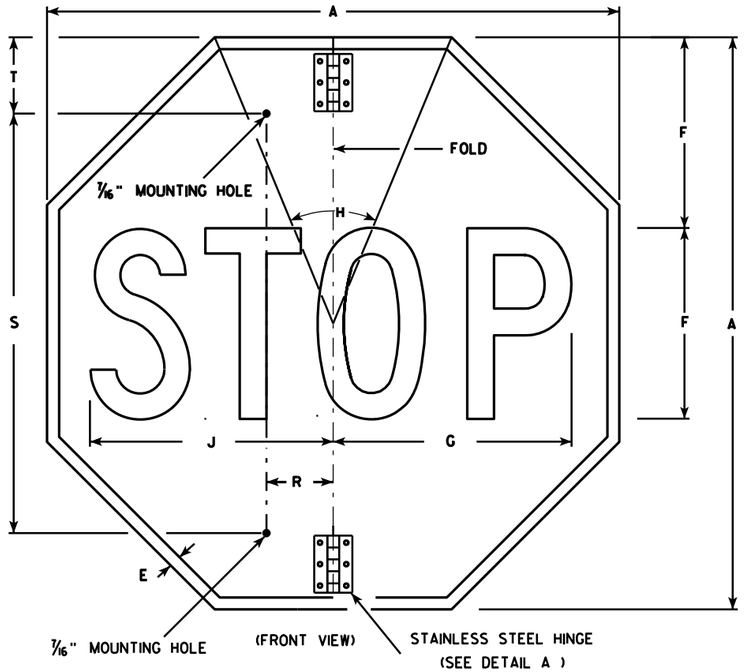

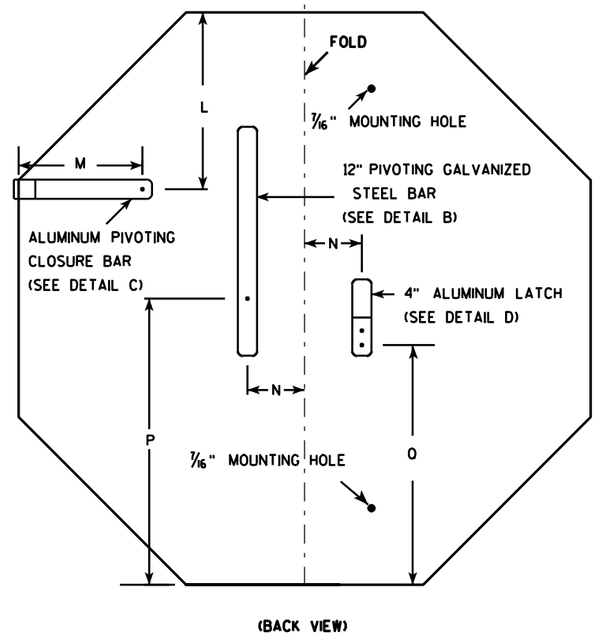

NOTES

1. Sign is Type II - Type H Reflective - reference WIS DOT Standard Specification for HIGHWAY and STRUCTURE CONSTRUCTION latest edition.
2. Color:
   Background - Red
   Message - White
3. Message Series - C
4. All hardware used on the folding STOP sign installation shall conform to 637.2.4 of the WIS DOT Standard Specification.

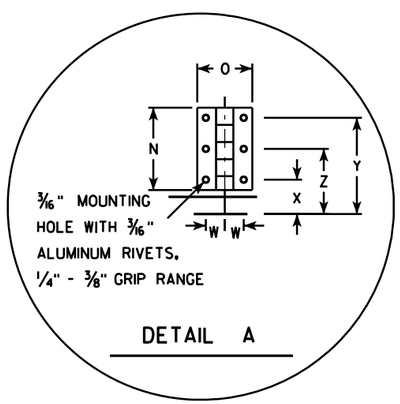

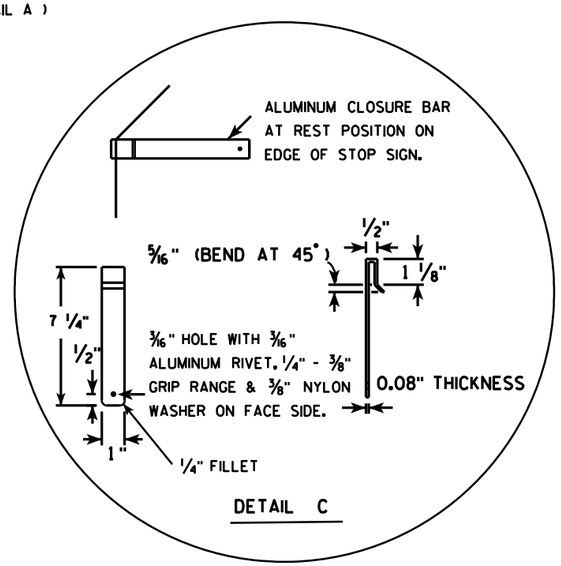

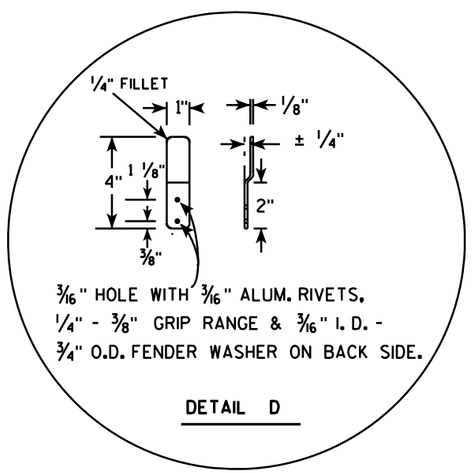

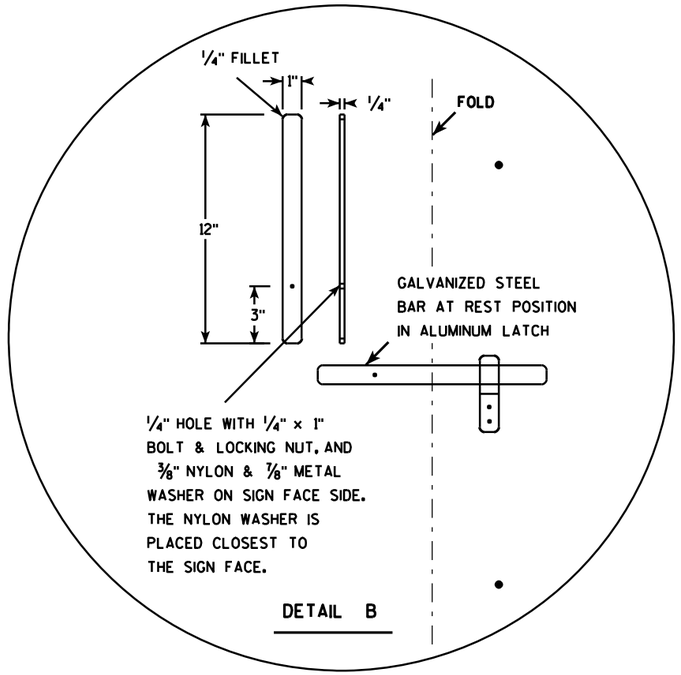

SIZE	A	B	C	D	E	F	G	H	I	J	K	L	M	N	O	P	Q	R	S	T	U	V	W	X	Y	Z	Area sq. ft.
1																											
2S	30				5/8	10	12 1/2	45		12 3/4		9 1/4	6 1/2	3	2	15	12 3/8	2 1/2	22	5			11/16	1 1/4	3 1/2	2 3/8	5.18
2M	36				3/4	12	15	45		15 3/8		11	6 1/2	3	2	18	15 3/8	2 1/2	26	5			11/16	1 1/4	3 1/2	2 3/8	7.46
3	36				3/4	12	15	45		15 3/8		11	6 1/2	3	2	18	15 3/8	2 1/2	26	5			11/16	1 1/4	3 1/2	2 3/8	7.46
4																											
5																											

STANDARD SIGN
R1-1F

WISCONSIN DEPT OF TRANSPORTATION

APPROVED Matthew R Rauch
for State Traffic Engineer

DATE 12/03/10 PLATE NO. R1-1F.3

PROJECT NO:	HWY:	COUNTY:		SHEET NO: 176	E

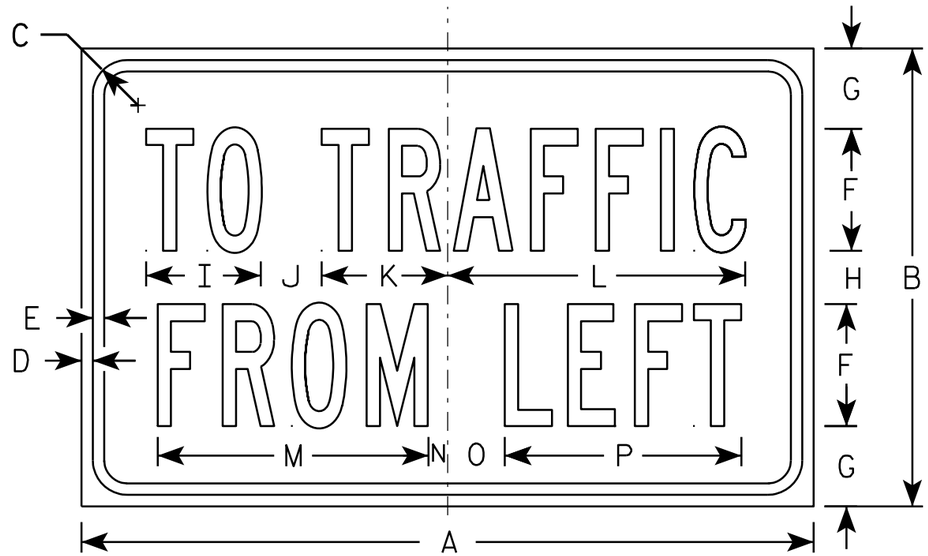

R1-54

NOTES

1. Sign is Type II - Type H Reflective - reference WIS DOT Standard Specification for HIGHWAY and STRUCTURE CONSTRUCTION latest edition.
2. Color:
   Background - White
   Message - Black
3. Message Series - B

SIZE	A	B	C	D	E	F	G	H	I	J	K	L	M	N	O	P	Q	R	S	T	U	V	W	X	Y	Z	Area sq. ft.
1																											
2S	24	15	1 1/8	3/8	3/8	4	2 5/8	1 3/4	3 3/4	2	4 1/8	9 3/4	8 7/8	5/8	1 7/8	7 3/4											2.5
2M	24	15	1 1/8	3/8	3/8	4	2 5/8	1 3/4	3 3/4	2	4 1/8	9 3/4	8 7/8	5/8	1 7/8	7 3/4											2.5
3																											
4																											
5																											

STANDARD SIGN
R1-54

WISCONSIN DEPT OF TRANSPORTATION

APPROVED Matthew R Rauch
for State Traffic Engineer

DATE 12/03/10 PLATE NO. R1-54.2

PROJECT NO:	HWY:	COUNTY:		SHEET NO: 177	E

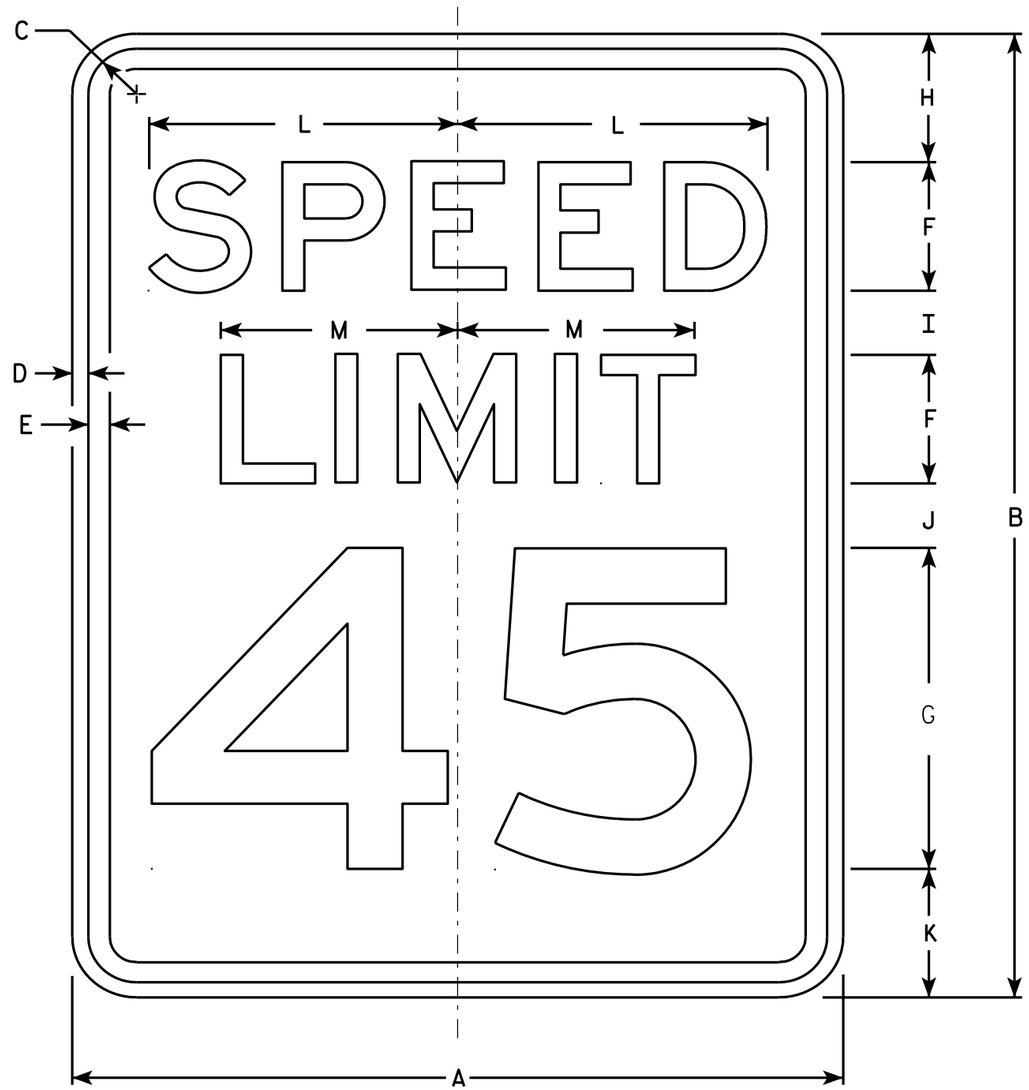

R2-1

NOTES

1. Sign is Type II - Type H Reflective - reference WIS DOT Standard Specification for HIGHWAY and STRUCTURE CONSTRUCTION latest edition.
2. Color:
   Background - White
   Message - Black
3. Message Series - E
4. Corners may be square or rounded when base material is plywood but borders shall be rounded as shown. When base material is metal, the corners and borders shall be rounded.
5. Substitute appropriate numerals and optically adjust spacing to achieve proper balance.

SIZE	A	B	C	D	E	F	G	H	I	J	K	L	M	N	O	P	Q	R	S	T	U	V	W	X	Y	Z	Area sq. ft.
1	18	24	1 1/8	3/8	1/2	3	8	3	2	2	3	7 1/4	5 1/2														3.0
2S	24	30	1 1/8	3/8	1/2	4	10	3	2 1/4	3 3/8	3 3/8	9 5/8	7 3/8														5.0
2M	30	36	1 3/8	1/2	5/8	5	12	5	2 1/2	2 1/2	4	12	9 1/4														7.5
3	36	48	1 3/8	1/2	5/8	6	14	6	5	5	6	14 3/8	11														12.0
4	36	48	1 3/8	1/2	5/8	6	14	6	5	5	6	14 3/8	11														12.0
5	48	60	2 1/4	3/4	1	8	20	6	4 1/2	6 3/4	6 3/4	19 1/4	14 5/8														20.0

STANDARD SIGN
R2-1

WISCONSIN DEPT OF TRANSPORTATION

APPROVED Matthew R Rauch
for State Traffic Engineer

DATE 5/26/10 PLATE NO. R2-1.13

PROJECT NO: | HWY: | COUNTY: | SHEET NO: 178 | E

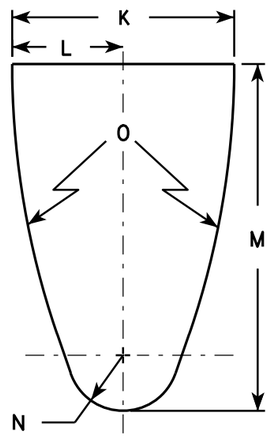

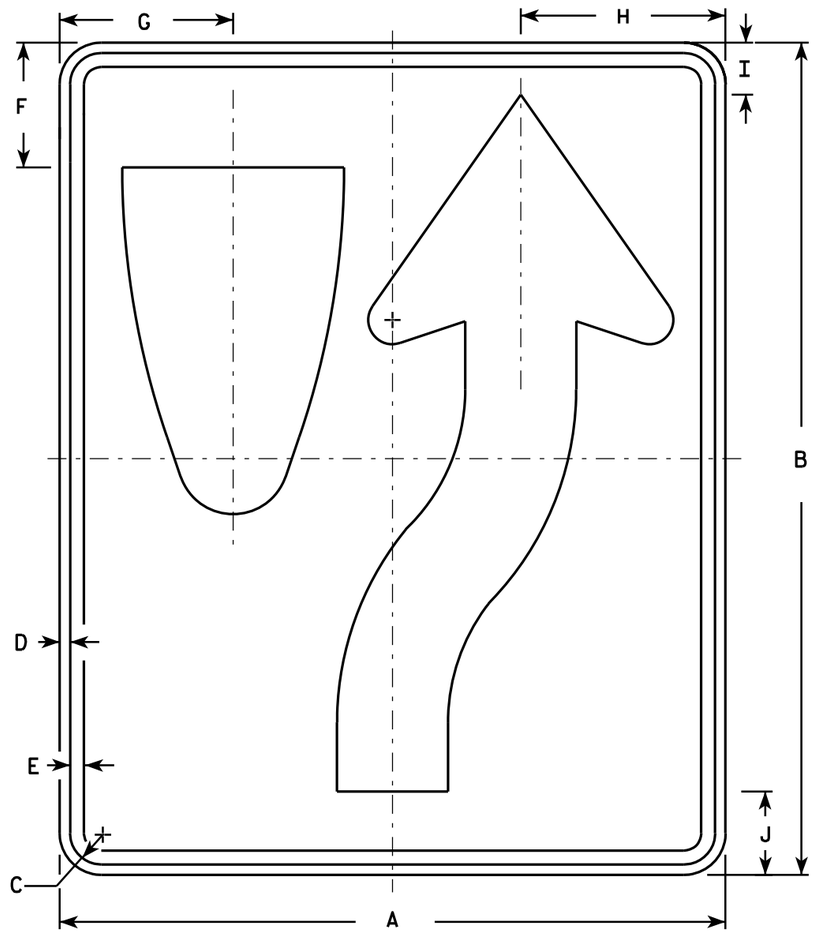

R4-7

NOTES

1. Sign is Type II - Type H Reflective - reference WIS DOT Standard Specification for HIGHWAY and STRUCTURE CONSTRUCTION latest edition. material is plywood but borders shall be rounded
2. Color:
   Background - White
   Message - Black
3. Corners may be square or rounded when base as shown. When base material is metal, the corners and borders shall be rounded.
4. R4-8 is the same as R4-7 except Legend is reversed.

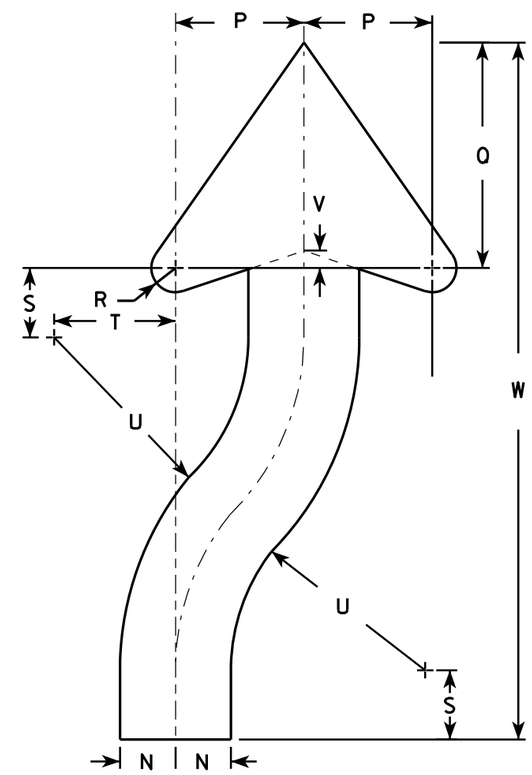

ARROW DETAIL

SIZE	A	B	C	D	E	F	G	H	I	J	K	L	M	N	O	P	Q	R	S	T	U	V	W	X	Y	Z	Area sq. ft.
1	18	24	1 1/8	3/8	1/2	3 3/8	4 3/4	5 1/2	1 3/8	2 1/4	6	3	9 3/8	1 1/2	22 1/2	3 1/2	6 1/8	5/8	1 7/8	3 1/4	6 3/4	1/2	20 3/8				3.0
2S	24	30	1 1/8	3/8	1/2	4 1/2	6 1/4	7 3/8	1 7/8	3	8	4	12 1/2	2	30	4 5/8	8 1/8	7/8	2 1/2	4 3/8	9	5/8	25 1/8				5.0
2M	24	30	1 1/8	3/8	1/2	4 1/2	6 1/4	7 3/8	1 7/8	3	8	4	12 1/2	2	30	4 5/8	8 1/8	7/8	2 1/2	4 3/8	9	5/8	25 1/8				5.0
3	36	48	1 3/4	1/2	5/8	6 3/4	9 3/8	11 1/8	2 7/8	4 1/2	12	6	18 3/4	3	45	6 7/8	12 1/4	1 1/4	3 3/4	6 5/8	13 1/2	1	40 3/4				12.0
4	36	48	1 3/4	1/2	5/8	6 3/4	9 3/8	11 1/8	2 7/8	4 1/2	12	6	18 3/4	3	45	6 7/8	12 1/4	1 1/4	3 3/4	6 5/8	13 1/2	1	40 3/4				12.0
5	48	60	2 1/4	3/4	1	9	12 1/2	14 3/4	3 3/4	6	16	8	25	4	60	9 1/4	16 1/4	1 5/8	5	8 3/4	18	1 1/4	50 1/4				20.0

STANDARD SIGN
R4-7 & R4-8

WISCONSIN DEPT OF TRANSPORTATION

APPROVED Matthew R Rauch for State Traffic Engineer

DATE 3/25/2011 PLATE NO. R4-7.8

PROJECT NO:	HWY:	COUNTY:		SHEET NO: 179	E

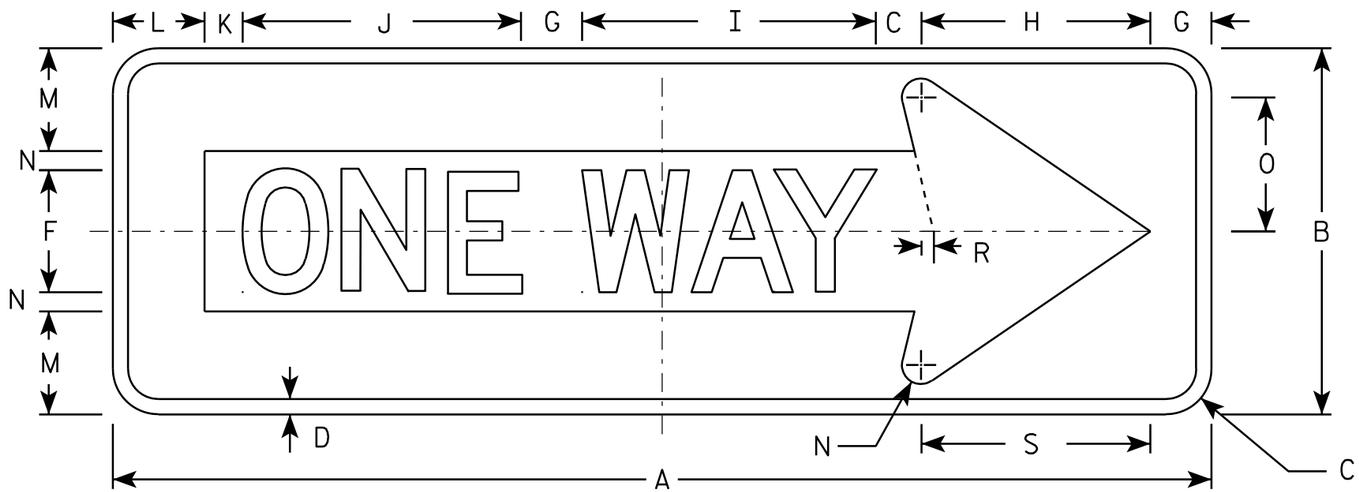

R6-1 R

NOTES

1. Sign is Type II - Type H Reflective - reference WIS DOT Standard Specification for HIGHWAY and STRUCTURE CONSTRUCTION latest edition.
2. Color:
   Background - BLACK
   Message - BLACK LEGEND & WHITE ARROW & BORDER
3. Message Series - D
4. Corners may be square or rounded when base material is plywood but borders shall be rounded as shown. When base material is metal, the corners and borders shall be rounded.

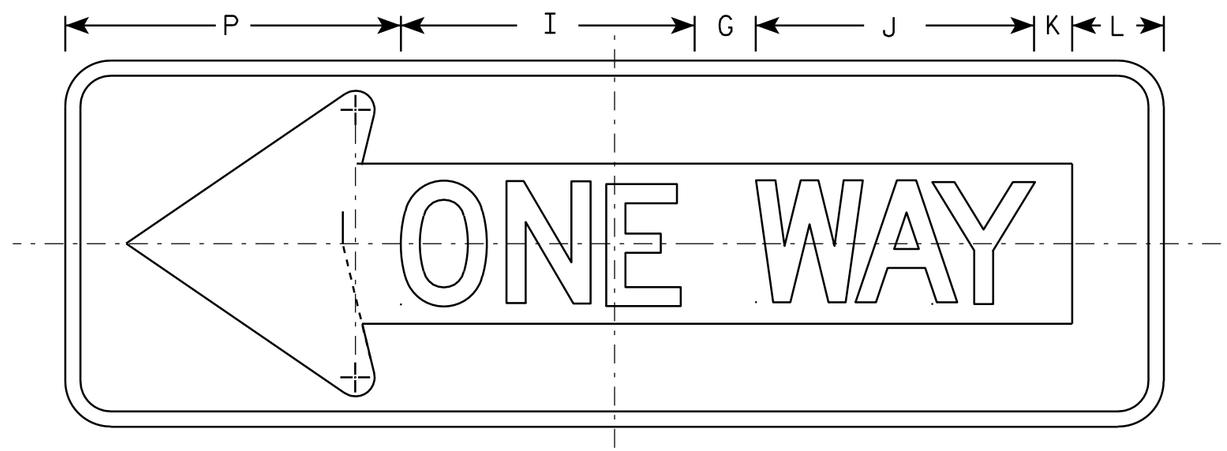

R6-1 L

SIZE	A	B	C	D	E	F	G	H	I	J	K	L	M	N	O	P	Q	R	S	T	U	V	W	X	Y	Z	Area sq. ft.
1																											
2S	36	12	1 1/2	1/2		4	2	7 1/2	9 5/8	9 1/8	1 1/4	3	3 3/8	5/8	4 3/8	11		3/8	7 1/2								3.0
2M	54	18	2 1/4	3/4		6	3	11 1/4	14 1/2	13 5/8	1 7/8	4 1/2	5	1	6 1/2	16 1/2		5/8	11 1/4								6.75
3	54	18	2 1/4	3/4		6	3	11 1/4	14 1/2	13 5/8	1 7/8	4 1/2	5	1	6 1/2	16 1/2		5/8	11 1/4								6.75
4	54	18	2 1/4	3/4		6	3	11 1/4	14 1/2	13 5/8	1 7/8	4 1/2	5	1	6 1/2	16 1/2		5/8	11 1/4								6.75
5																											

STANDARD SIGN
R6-1 L & R

WISCONSIN DEPT OF TRANSPORTATION

APPROVED Matthew R Rauch
for State Traffic Engineer

DATE 12/17/10 PLATE NO. R6-1.2

PROJECT NO:

SHEET NO: 180 E

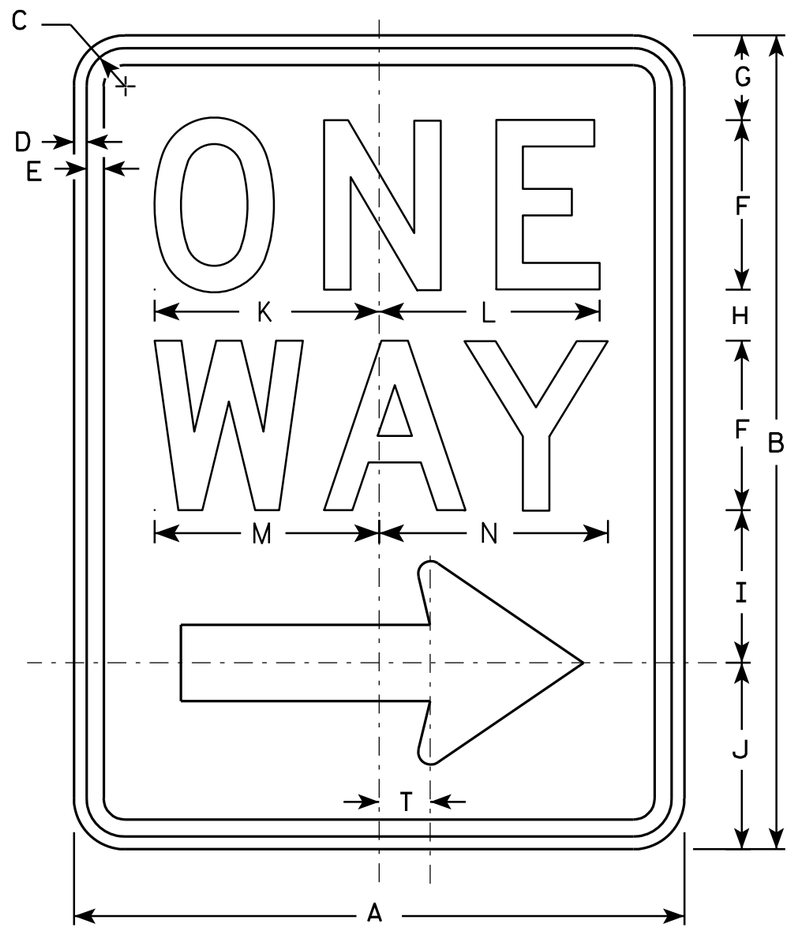

R6-2R

NOTES

1. Sign is Type II - Type H Reflective - reference WIS DOT Standard Specification for HIGHWAY and STRUCTURE CONSTRUCTION latest edition.
2. Color:
   Background - White
   Message - Black
3. Message Series - D
4. Corners may be square or rounded when base material is plywood but borders shall be rounded as shown. When base material is metal, the corners and borders shall be rounded.
5. R6-2L same as R6-2R except arrow points to the left.

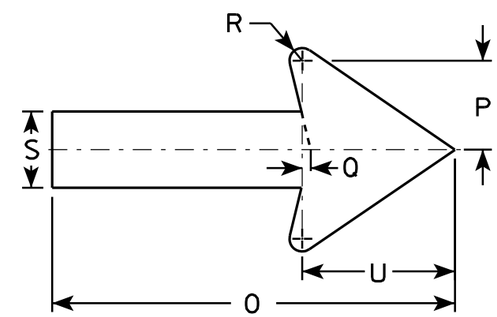

SIZE	A	B	C	D	E	F	G	H	I	J	K	L	M	N	O	P	Q	R	S	T	U	V	W	X	Y	Z
1	18	24	1 1/8	3/8	1/2	5	2 1/2	1 1/2	4 1/2	5 1/2	6 5/8	6 1/2	6 5/8	6 3/4	11 7/8	2 5/8	1/4	3/8	2 1/4	1 1/2	4 1/2					
2S	24	30	1 1/8	3/8	1/2	6	3	2 1/2	5 1/2	7	8 1/8	8 1/8	8 1/2	8 5/8	16	3 1/2	3/8	1/2	3	2	6					
2M	30	36	1 3/8	1/2	5/8	8	2 1/2	2 5/8	6 7/8	8	10 1/2	10 1/2	11 1/4	11 1/4	20	4 3/8	1/2	5/8	3 3/4	2 1/2	7 1/2					
3	36	48	1 7/8	1/2	5/8	10	5 1/4	3 1/4	9	10 1/2	12 3/4	12 3/4	13 1/4	13 1/2	24	5 5/8	1/2	3/4	4 3/4	3	9					
4	36	48	1 7/8	1/2	5/8	10	5 1/4	3 1/4	9	10 1/2	12 3/4	12 3/4	13 1/4	13 1/2	24	5 5/8	1/2	3/4	4 3/4	3	9					
5																										

STANDARD SIGN
R6-2 R&L

WISCONSIN DEPT OF TRANSPORTATION

APPROVED Matthew R Rauch
for State Traffic Engineer

DATE 11/2/10 PLATE NO. R6-2.8

PROJECT NO:	HWY:	COUNTY:		SHEET NO: 181	E

NOTES

1. Sign is Type II - Type H Reflective - reference WIS DOT Standard Specification for HIGHWAY and STRUCTURE CONSTRUCTION latest edition.
2. Color:
   Background - WHITE
   Message - BLACK
3. Corners may be square or rounded when base material is plywood but borders shall be rounded as shown. When base material is metal, the corners and borders shall be rounded.

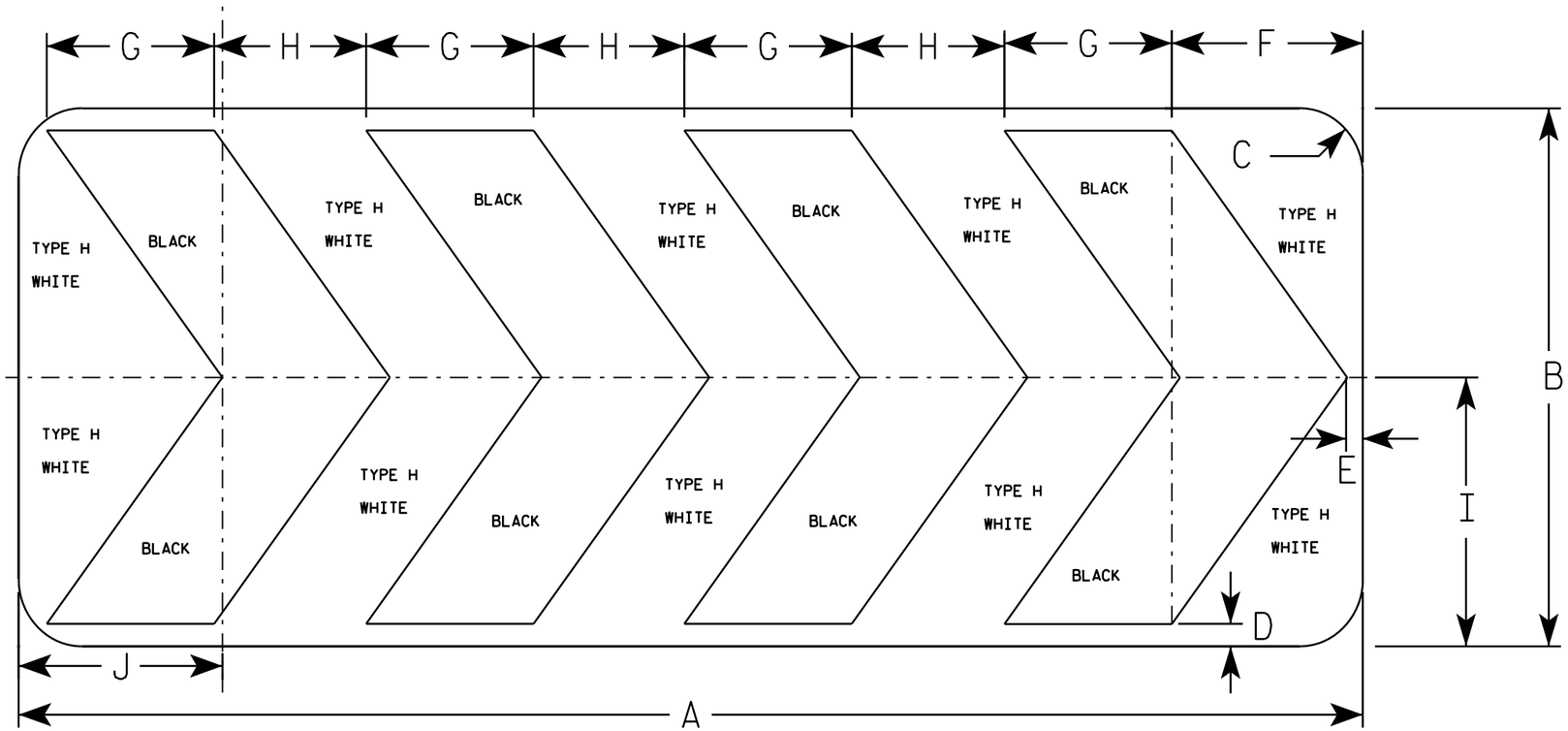

R6-4B

SIZE	A	B	C	D	E	F	G	H	I	J	K	L	M	N	O	P	Q	R	S	T	U	V	W	X	Y	Z	Area sq. ft.
1																											
2S	60	24	2 1/4	1	3/4	8 1/2	7 1/2	6 3/4	12	9 1/8																	10.0
2M	60	24	2 1/4	1	3/4	8 1/2	7 1/2	6 3/4	12	9 1/8																	10.0
3																											
4																											
5																											

STANDARD SIGN
R6-4B

WISCONSIN DEPT OF TRANSPORTATION

APPROVED Matthew R Rauch
for State Traffic Engineer

DATE 1/03/11 PLATE NO. R6-4B.2

PROJECT NO:

SHEET NO: 182 E

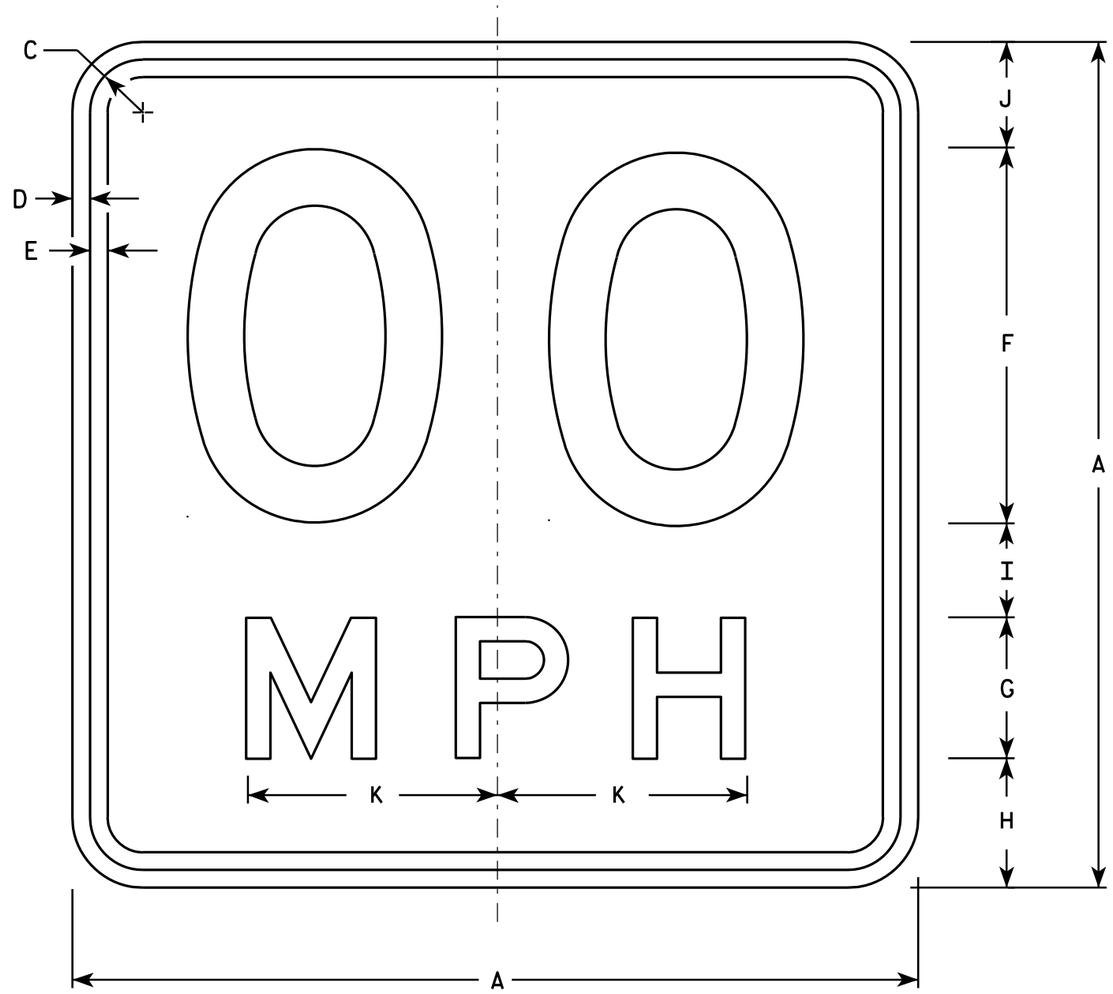

W13-1

* For 30" x 30" Warning Signs, use 18" x 18" W13-1 signs.
For 36" x 36" Warning Signs, use 24" x 24" W13-1 signs.

NOTES

1. Sign is Type II - Type F Reflective - reference WIS DOT Standard Specification for HIGHWAY and STRUCTURE CONSTRUCTION latest edition.
2. Color:
   Background - Yellow
   Message - Black
3. Message Series - See Note 6
4. Corners may be square or rounded when base material is plywood but borders shall be rounded as shown. When base material is metal, the corners and borders shall be rounded.
5. Substitute appropriate numerals and optically space about centerline to achieve proper balance.
6. Line 1 is Series D
   Line 2 is Series E

SIZE	A	B	C	D	E	F	G	H	I	J	K	L	M	N	O	P	Q	R	S	T	U	V	W	X	Y	Z	Area sq. ft.
1	18		1 1/8	3/8	3/8	8	3	2 3/4	2	2 1/4	5 3/8																2.25
* 2S	18		1 1/8	3/8	3/8	8	3	2 3/4	2	2 1/4	5 3/8																2.25
* 2M	18		1 1/8	3/8	3/8	8	3	2 3/4	2	2 1/4	5 3/8																2.25
3	24		1 1/8	3/8	1/2	10	4	4	2 3/4	3 1/4	6 5/8																4.00
4	36		1 5/8	5/8	3/4	16	6	5 1/2	4	4 1/2	10 5/8																9.00
5	36		1 5/8	5/8	3/4	16	6	5 1/2	4	4 1/2	10 5/8																9.00

STANDARD SIGN
W13-1

WISCONSIN DEPT OF TRANSPORTATION

APPROVED Matthew R Rauch
For State Traffic Engineer

DATE 5/31/12 PLATE NO. W13-1.16

PROJECT NO: | HWY: | COUNTY: | SHEET NO: 183 | E

NOTES

1. Sign is Type II - Type F Reflective - reference WIS DOT Standard Specification for HIGHWAY and STRUCTURE CONSTRUCTION latest edition.
2. Color:
   Background - Yellow
   Message - Black
3. Corners may be square or rounded when base material is plywood but borders shall be rounded as shown. When base material is metal, the corners and borders shall be rounded.

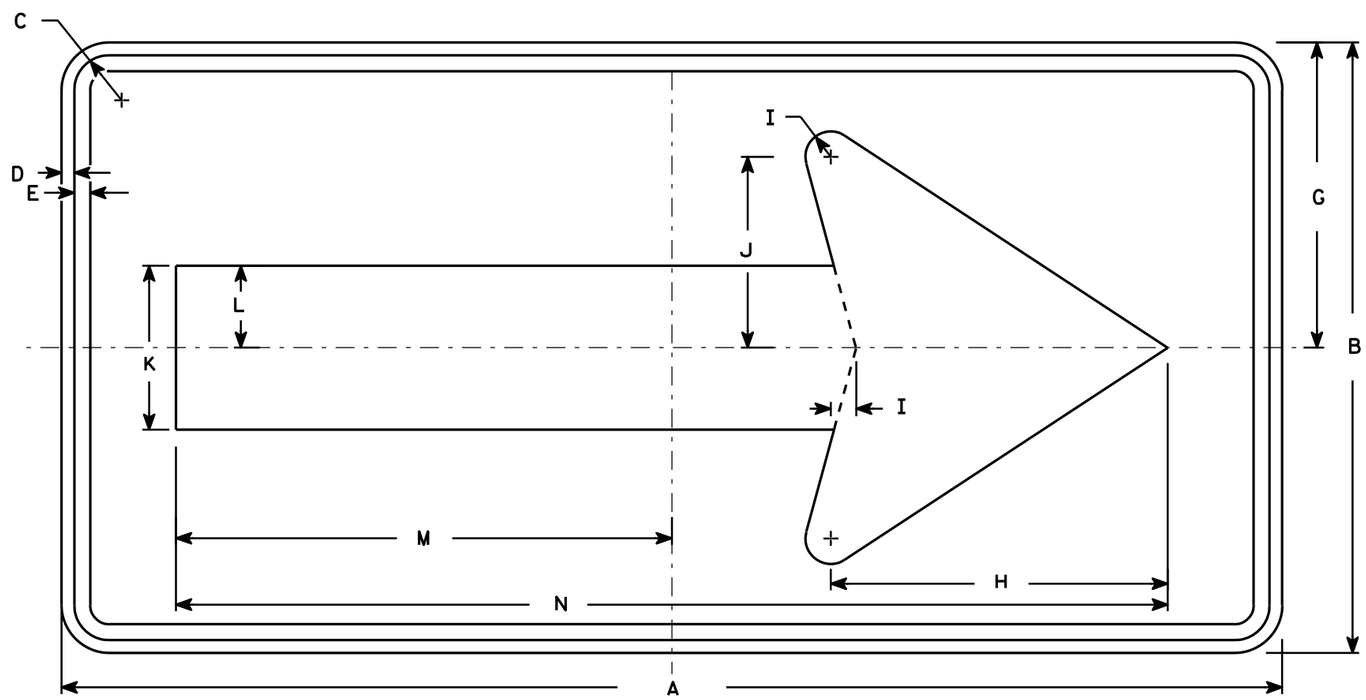

W1-6

SIZE	A	B	C	D	E	F	G	H	I	J	K	L	M	N	O	P	Q	R	S	T	U	V	W	X	Y	Z	Area sq. ft.
1	36	18	1 1/8	3/8	3/8		9	10	3/4	5 5/8	4 3/4	2 3/8	14 5/8	29 1/4													4.5
2S	48	24	1 3/8	1/2	5/8		12	13 1/4	1	7 1/2	6 1/2	3 1/4	19 1/2	39													8.0
2M	48	24	1 3/8	1/2	5/8		12	13 1/4	1	7 1/2	6 1/2	3 1/4	19 1/2	39													8.0
3	60	30	1 3/8	1/2	5/8		15	16 1/4	1 1/4	9 1/4	8	4	24 3/8	48 3/4													12.5
4	60	30	1 3/8	1/2	5/8		15	16 1/4	1 1/4	9 1/4	8	4	24 3/8	48 3/4													12.5
5	96	48	2 1/4	3/4	1		24	26 1/2	2	15	13	6 1/2	39	78													32.0

STANDARD SIGN
W1-6

WISCONSIN DEPT OF TRANSPORTATION

APPROVED Matthew R Rauch
for State Traffic Engineer

DATE 6/7/10 PLATE NO. W1-6.8

PROJECT NO: | HWY: | COUNTY: | SHEET NO: 184 | E

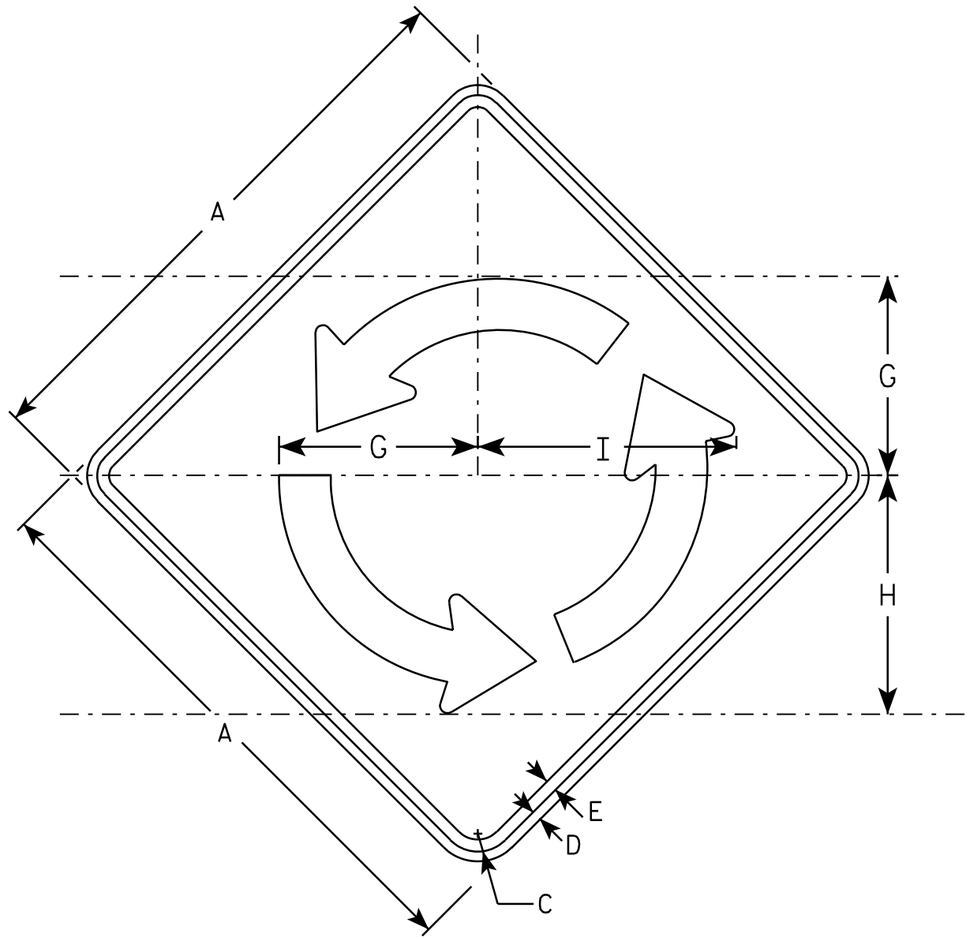

W2-6

NOTES

1. Sign is Type II - Type F Reflective - reference WIS DOT Standard Specification for HIGHWAY and STRUCTURE CONSTRUCTION latest edition.
2. Color:
   Background - YELLOW
   Message - BLACK
3. Message Series - B
4. Corners may be square or rounded when base material is plywood but borders shall be rounded as shown. When base material is metal, the corners and borders shall be rounded.

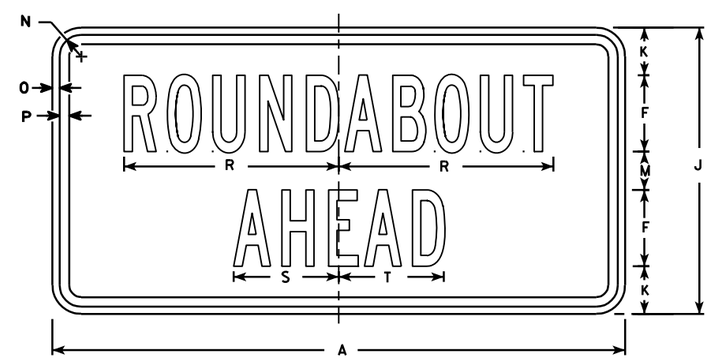

W2-6P

SIZE	A	B	C	D	E	F	G	H	I	J	K	L	M	N	O	P	Q	R	S	T	U	V	W	X	W2-6 Area sq. ft.	W2-6P Area sq. ft.
1																										
2S	30		1 3/8	1/2	5/8	4	10 3/8	12 1/2	13 1/2	15	2 1/2		2	1 1/8	3/8	1/2		11 1/4	5 1/2	5 1/2					6.25	3.12
2M	30		1 3/8	1/2	5/8	4	10 3/8	12 1/2	13 1/2	15	2 1/2		2	1 1/8	3/8	1/2		11 1/4	5 1/2	5 1/2					6.25	3.12
3	36		1 5/8	5/8	3/4	5	12 1/2	15	16 1/4	18	2 5/8		2 3/4	1 1/8	3/8	1/2		14	7	6 3/4					9.00	4.50
4	48		2 1/4	3/4	1	6	16 5/8	20	16 1/4	24	4 3/8		3 5/8	1 3/8	1/2	5/8		17	8 1/4	8 1/4					16.0	8.0
5																										

STANDARD SIGN
W2-6

WISCONSIN DEPT OF TRANSPORTATION

APPROVED Matthew R Rauch
for State Traffic Engineer

DATE 6/29/12 PLATE NO. W2-6.5

PROJECT NO:

SHEET NO: 185 E

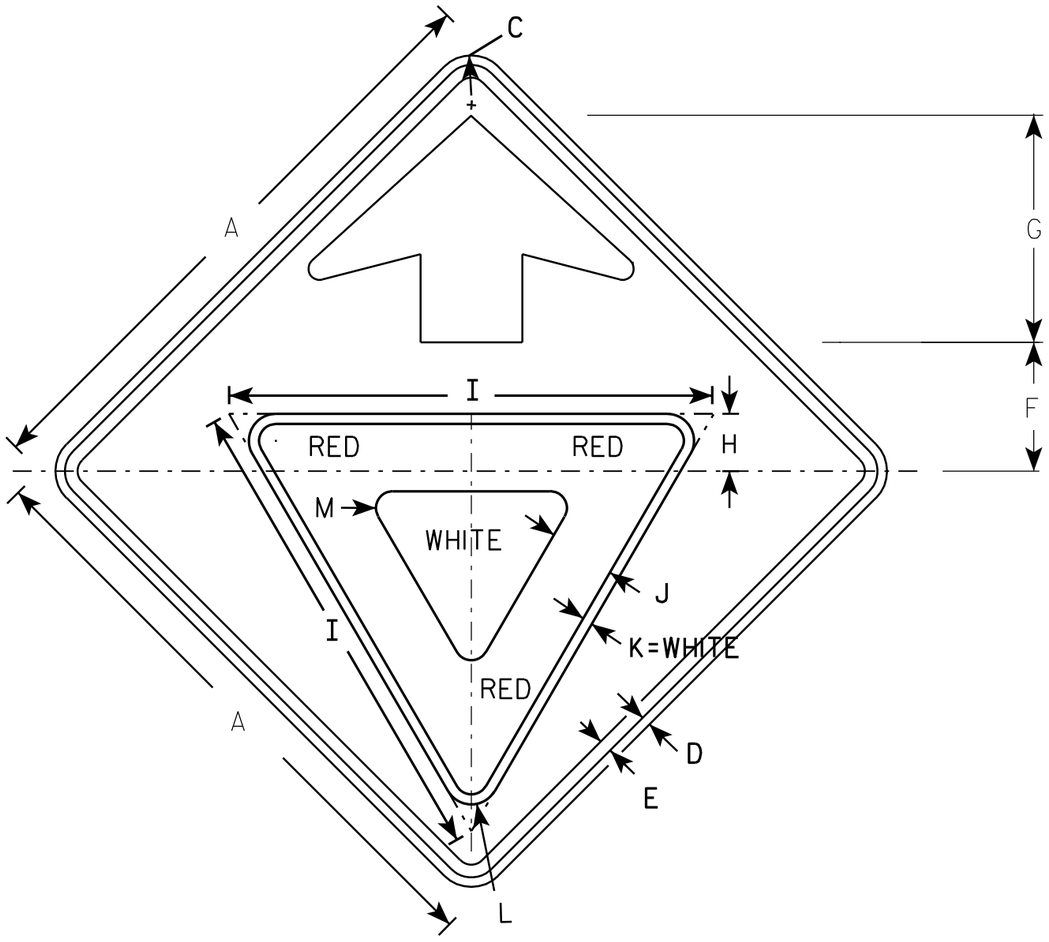

W3-2

NOTES

1. All Signs Type II - Type F Reflective - reference WIS DOT Standard Specification for HIGHWAY and STRUCTURE CONSTRUCTION latest edition.
2. Color:
   - Background - YELLOW
   - Arrow & Border - BLACK
   - Yield Symbol - WHITE BORDER ON RED BACKGROUND

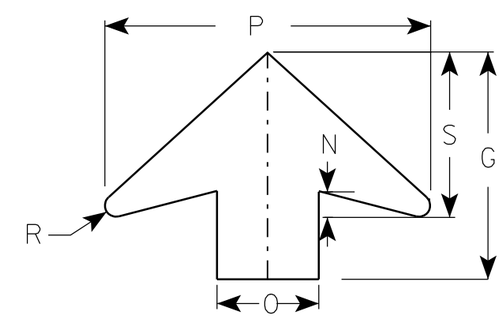

ARROW DETAIL

SIZE	A	B	C	D	E	F	G	H	I	J	K	L	M	N	O	P	Q	R	S	T	U	V	W	X	Y	Z	Area sq. ft.
1	30		1 3/8	1/2	5/8	6 1/4	11 1/4	3	25	3 3/8	1/2	1 3/8	7/8	1 1/4	5	16		1/2	8								6.25
2S	36		1 5/8	5/8	3/4	7 1/2	13 1/2	3 3/8	28	3 3/4	5/8	1 1/2	1	1 5/8	6	19 1/4		5/8	9 3/4								9.0
2M	36		1 5/8	5/8	3/4	7 1/2	13 1/2	3 3/8	28	3 3/4	5/8	1 1/2	1	1 5/8	6	19 1/4		5/8	9 3/4								9.0
3	36		1 5/8	5/8	3/4	7 1/2	13 1/2	3 3/8	28	3 3/4	5/8	1 1/2	1	1 5/8	6	19 1/4		5/8	9 3/4								9.0
4	48		2 1/4	3/4	1	10	17 7/8	4 1/2	38	5	3/4	2 1/8	1 3/8	2	8	25 5/8		7/8	13								16.0
5	48		2 1/4	3/4	1	10	17 7/8	4 1/2	38	5	3/4	2 1/8	1 3/8	2	8	25 5/8		7/8	13								16.0

STANDARD SIGN
W3-2

WISCONSIN DEPT OF TRANSPORTATION

APPROVED Matthew R Rauch
for State Traffic Engineer

DATE 6/7/10 PLATE NO. W3-2..9

PROJECT NO:

SHEET NO: 186 E

STATE PROJECT NUMBER
1500-32-71

▲ SEE CORNER DETAILS

■ NAME PLATE LOCATION (SEE SHT 4)

* BUILD APRON AND END OF BOX LEVEL

▲ VERT. CONST. JOINT (TYP.)

◯ INDICATES WING NUMBER

NOTE: STRUCTURE BACKFILL REQUIRED BEHIND ALL WING WALLS.

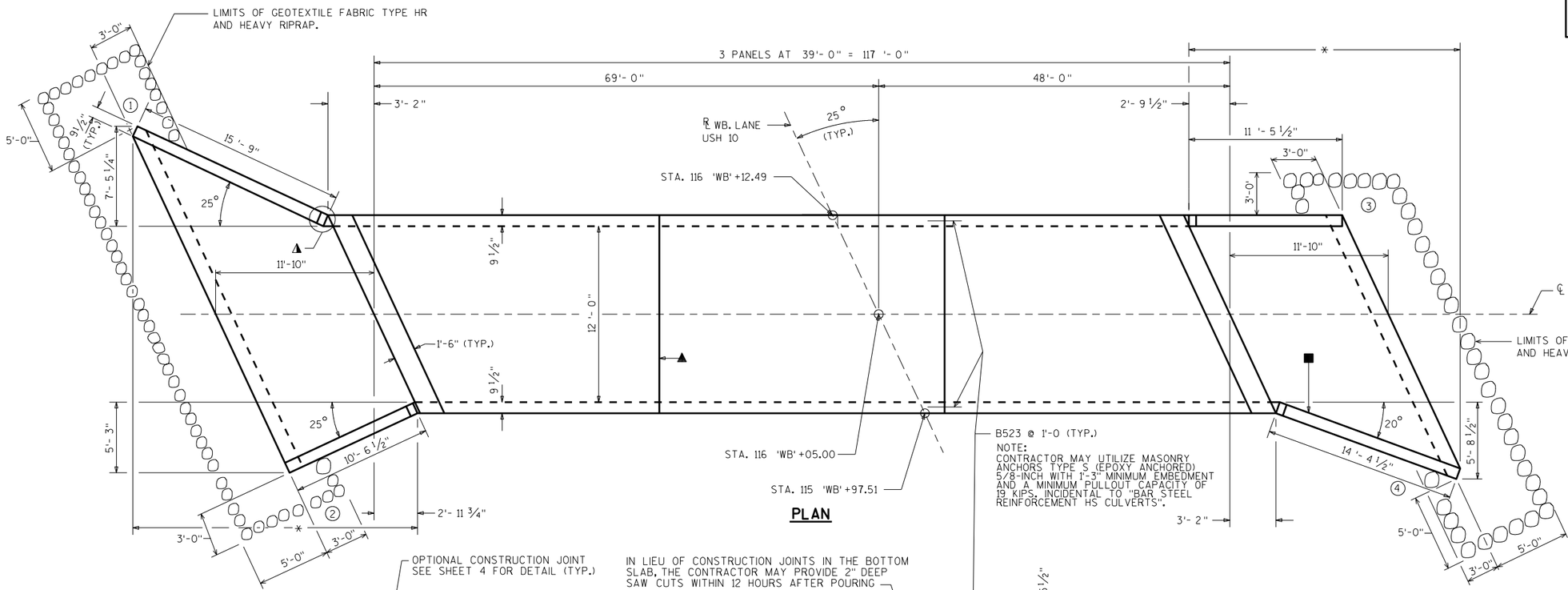

PLAN

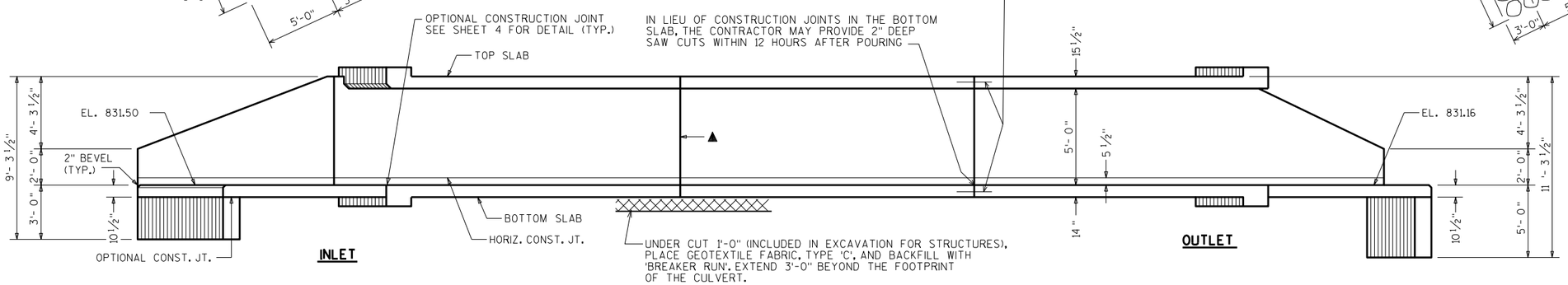

ELEVATION

LIST OF DRAWINGS

1. LAYOUT
2. BOX DETAILS
3. APRON DETAILS
4. DETAILS
5. SUBSURFACE EXPLORATION

DESIGN DATA

LIVE LOAD:

DESIGN LOADING: HL-93
INVENTORY RATING FACTOR: RF=1.05
OPERATING RATING FACTOR: RF=1.35
WISCONSIN STANDARD PERMIT VEHICLE (WIS.-SPV): 255 (KIPS)

EARTHLOAD: DESIGNED FOR 2.0 FT. OF FILL.

ULTIMATE DESIGN STRESSES:

CONCRETE MASONRY, GRADE A-FA — f'_c = 3500 P.S.I.
HIGH STRENGTH BAR STEEL REINFORCEMENT — f_y = 60000 P.S.I.

INVERTS SET 6" BELOW STREAMBED.

TRAFFIC VOLUME

USH 10
A.D.T. = 11200 (2031)
R.D.S. = 60 M.P.H.

HYDRAULIC DATA

100 YEAR FREQUENCY
Q_{100} = 111 C.F.S.
VEL. = 3.1 F.P.S.
HW. = EL. 835.7
DRAINAGE AREA = 0.2 SQ. MI.
OVERTOPPING RDWY. = N.A.

2 YEAR FREQUENCY
Q_{100} = 26 C.F.S.
HW_2 = 834.8

TOTAL ESTIMATED QUANTITIES

BID ITEMS

203.0200	REMOVING OLD STRUCTURE STA. 115 'WB'+ 65	1	LS
206.2000	EXCAVATION FOR STRUCTURES CULVERTS C-8-76	1	LS
210.0100	BACKFILL STRUCTURE	760	CY
311.0115	BREAKER RUN	115	CY
504.0100	CONCRETE MASONRY CULVERTS	207	CY
505.0410	BAR STEEL REINFORCEMENT HS CULVERTS	11,835	LB
505.0610	BAR STEEL REINFORCEMENT HS COATED CULVERTS	10,945	LB
516.0500	RUBBERIZED MEMBRANE WATERPROOFING	25	SY
606.0300	RIPRAP HEAVY	30	CY
645.0105	GEOTEXTILE FABRIC TYPE C	380	SY
645.0120	GEOTEXTILE FABRIC TYPE HR	80	SY

NON-BID ITEMS

FILLER	3/4"	SIZE

GENERAL NOTES

REMOVE EXISTING STRUCTURE AT STA. 115 'WB'+ 65 A PAIR OF 30 CMP WITH CONCRETE ENDWALLS.

DRAWINGS SHALL NOT BE SCALED.

BAR STEEL REINFORCEMENT SHALL BE EMBEDDED 2" CLEAR UNLESS SHOWN OR NOTED OTHERWISE.

THE UPPER LIMITS OF EXCAVATION FOR STRUCTURES SHALL BE THE EXISTING GROUNDLINE.

ALL SPACES EXCAVATED AND NOT OCCUPIED BY THE NEW STRUCTURE SHALL BE BACKFILLED WITH STRUCTURE BACKFILL TO THE TOP OF THE BOX WITHIN THE LENGTH OF THE CULVERT.

THE CONCRETE IN THE CUTOFF WALLS MAY BE PLACED UNDERWATER IF THE EXCAVATION CANNOT BE DEWATERED.

PLACE A 18" (MIN.) WIDE SHEET OF 'RUBBERIZED MEMBRANE WATERPROOFING' ON TOP SLAB OVER ALL CONSTRUCTION JOINTS AND EXTEND DOWN TO BOTTOM OF OUTSIDE WALLS.

THE CONTRACTOR MAY FURNISH A PRECAST CONCRETE BOX CULVERT IN LIEU OF THE CAST-IN-PLACE BOX CULVERT WITH THE ACCEPTANCE OF THE SHOP DRAWINGS BY THE STRUCTURES DEVELOPMENT SECTION. THE PRECAST CONCRETE BOX CULVERT SHALL CONFORM TO PRECAST DETAILS ON CHAPTER 36 STANDARDS OF THE CURRENT WISC. DOT BRIDGE MANUAL. PAYMENT FOR THE PRECAST CULVERT SHALL BE BASED ON THE QUANTITIES AND PRICES BID FOR THE ITEMS LISTED IN THE "TOTAL ESTIMATED QUANTITIES".

STRUCTURE DESIGN CONTACT:
DANIELLE DE TENNIS (608) 266-8689
LAURA SHADEWALD (608) 267-9592

NO.	DATE	REVISION	BY

Plans Prepared By **WISDOT**
BUREAU OF STRUCTURES

ACCEPTED William C. Dreher LLS 5/31/12
CHIEF STRUCTURES DESIGN ENGINEER DATE

STRUCTURE C-8-76

USH 10 OVER DRAINAGE WAY

COUNTY CALUMET	~~TOWN/CITY~~/VILLAGE FOREST JUNCTION

DESIGN SPEC. AASHTO LRFD DESIGN SPEC. 5th EDITION

DESIGNED BY	DESIGN CK'D.	DRAWN BY	PLANS CK'D.
DFD	NAR	DFD	NAR

LAYOUT

SHEET 1 OF 5

187

8

8

SCALE = 4

I.D. 1500-32-00

DATE: APRIL 2012

STATE PROJECT NUMBER
1500-32-71

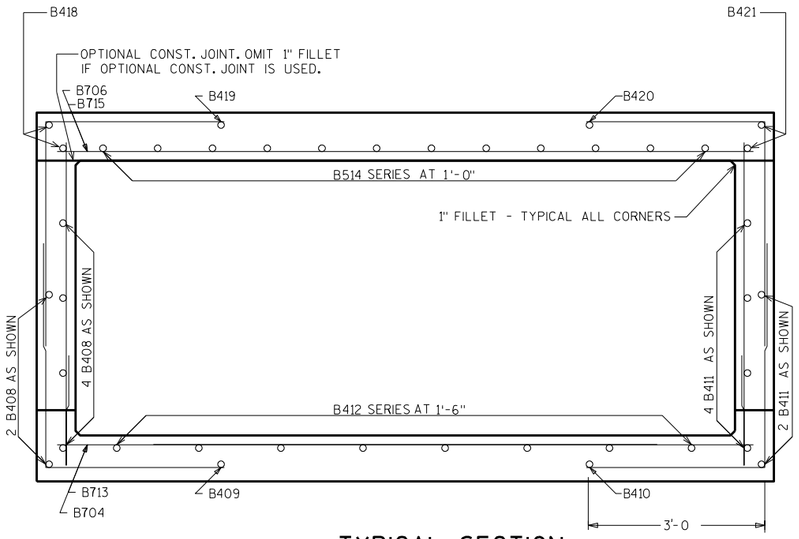

TYPICAL SECTION THRU BOX-EXTERIOR PANEL

BAR LABELS AND DIMENSIONS NOT SHOWN ARE IDENTICAL TO THOSE SHOWN IN THE INTERIOR PANEL SECTION.

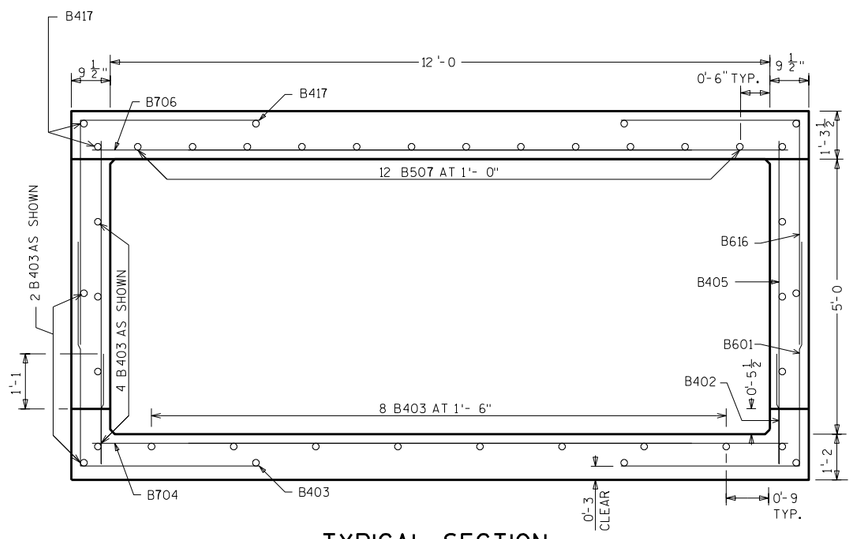

TYPICAL SECTION THRU BOX-INTERIOR PANEL

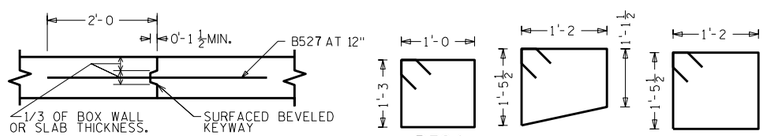

VERTICAL CONSTRUCTION JOINT

2" DEEP SAW CUT WITHIN 12 HOURS AFTER POURING MAY BE USED IN LIEU OF CONST. JT. IN BOTTOM SLAB.

B324 B325 B326

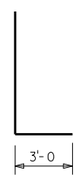

B601, B616

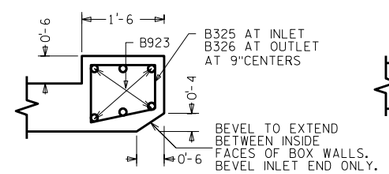

SECTION THRU TOP HEADER

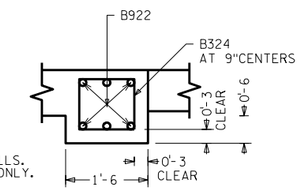

SECTION THRU BOTTOM HEADER

BILL OF BARS

NOTE: THE FIRST OR FIRST TWO DIGITS OF THE BAR MARK SIGNIFIES THE BAR SIZE.

BAR MARK	COAT	NO. REQ'D.	LENGTH	BENT	BAR SERIES	LOCATION
B601		240	7-5	X		BOTTOM CORNERS
B402		240	2-6			WALLS-DOWELS-VERT.
B403		22	38-6			BOTTOM SLAB & WALL
B704		149	13-3			BOTTOM SLAB TRANS.
B405		240	5-8			WALLS VERT.
B706	X	149	13-3			TOP SLAB TRANS
B507	X	12	38-6			TOP SLAB LONGIT.
B408		12	41-4			BOTTOM SLAB & WALL LONGIT
B409		2	40-2			BOTTOM SLAB LONGIT.
B410		2	36-9			BOTTOM SLAB LONGIT.
B411		12	35-4			BOTTOM SLAB & WALL LONGIT.
B412		16	38-8		▲	BOTTOM SLAB LONGIT.
B713		14	7-0		▲	BOTTOM SLAB TRANS.
B514	X	24	38-7		▲	TOP SLAB LONGIT.
B715	X	14	7-3		▲	TOP SLAB TRANS
B616	X	240	7-5	X		TOP CORNERS
B417	X	6	38-6			TOP SLAB LONGIT.
B418	X	4	41-4			TOP SLAB LONGIT.
B419	X	2	40-2			TOP SLAB LONGIT.
B420	X	2	36-9			TOP SLAB LONGIT.
B421	X	4	35-4			TOP SLAB LONGIT.
B922		12	14-7			BOTTOM HEADERS HORIZ.
B923	X	12	14-7			TOP HEADER HORIZ.
B324		40	5-0	X		BOTTOM HEADER STIRRUPS VERT.
B325	X	20	5-4	X		TOP HEADER STIRRUPS VERT.
B326	X	20	5-8	X		TOP HEADER STIRRUPS VERT.
B527	X	76	4-0			VERT. CONST. JOINT

▲ LENGTH SHOWN FOR BAR IS AN AVERAGE LENGTH AND SHOULD ONLY BE USED FOR BAR WEIGHT CALCULATIONS. SEE BAR SERIES TABLE FOR ACTUAL LENGTHS.

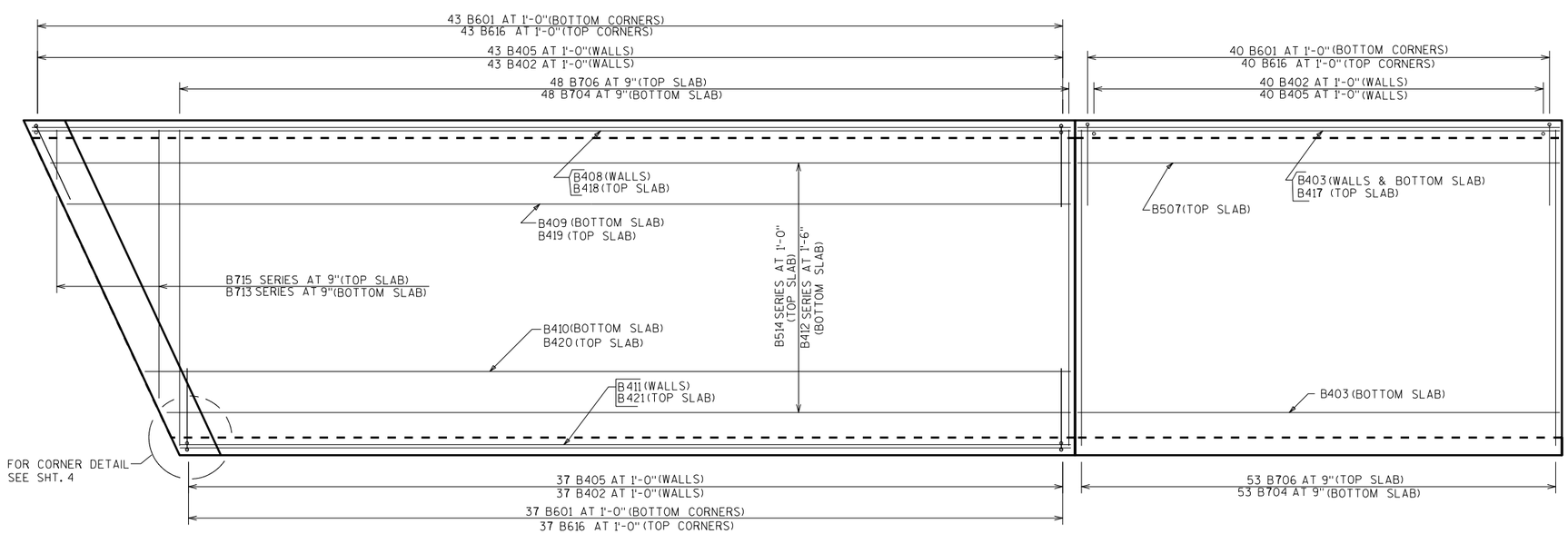

PLAN VIEW OF EXTERIOR PANEL

PLAN VIEW OF INTERIOR PANEL

BAR SERIES TABLE

MARK	NO. REQD.	LENGTH
B412	2 SERIES OF 8	36-2 TO 41-1
B713	2 SERIES OF 7	2-5 TO 12-1
B514	2 SERIES OF 12	36-0 TO 41-2
B715	2 SERIES OF 7	2-5 TO 12-1

BUNDLE AND TAG EACH SERIES SEPARATELY.

8

8

NO.	DATE	REVISION	BY

STATE OF WISCONSIN
DEPARTMENT OF TRANSPORTATION
STRUCTURES DESIGN SECTION

STRUCTURE C-8-76

DRAWN BY DFD PLANS CK'D. NAR

BOX DETAILS

SHEET 2

188

SCALE = 4

STATE PROJECT NUMBER

1500-32-71

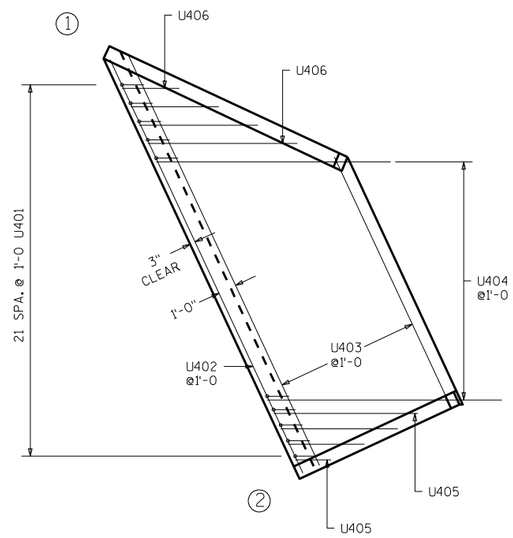

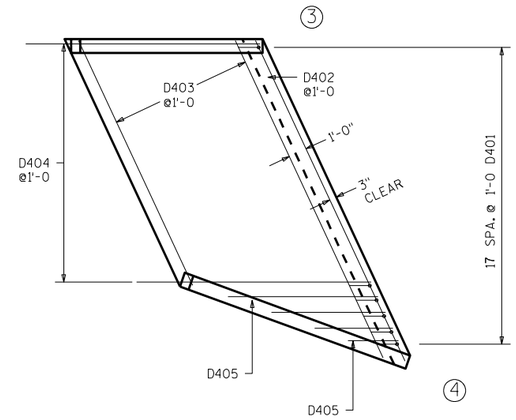

APRON REINF.

▲ 18" RUBBERIZED MEMBRANE WATER-PROOFING. PLACE ALONG HORIZ. CONST. JT. FOR ENTIRE WING LENGTH (TYP.).

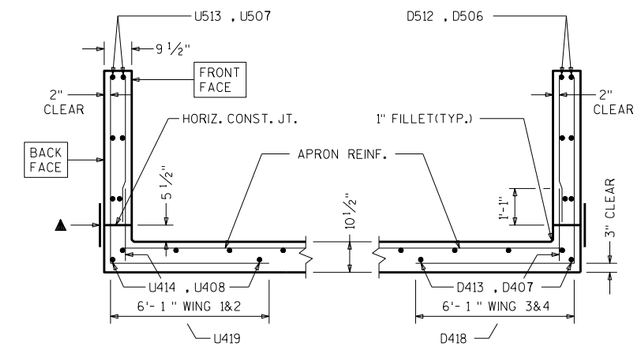

SECTION THRU WINGS

AT RIGHT ANGLES TO WING WALLS

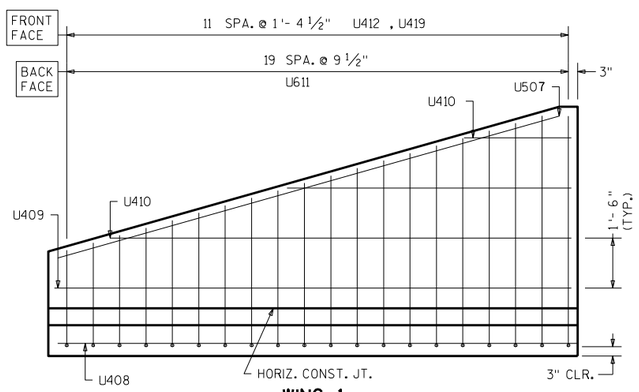

WING 1

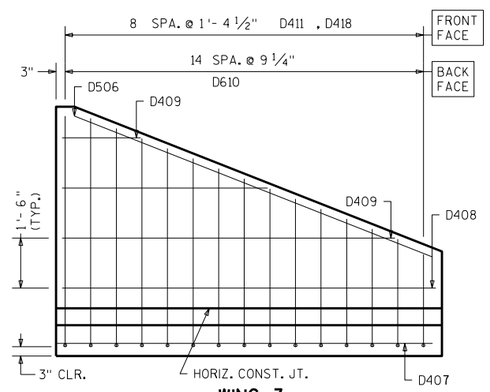

WING 3

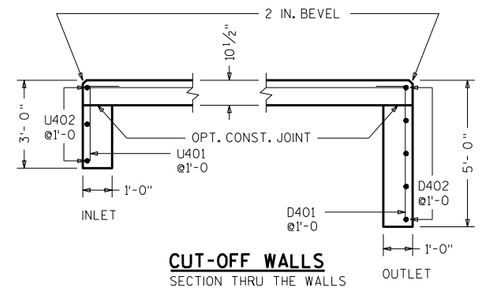

CUT-OFF WALLS

SECTION THRU THE WALLS

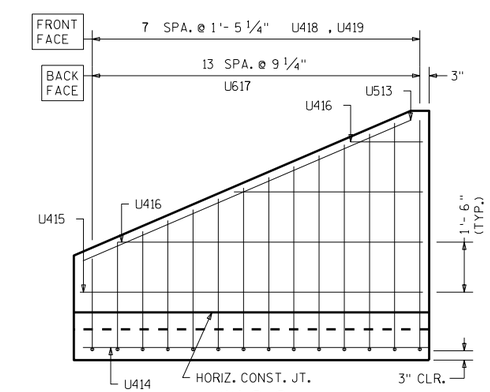

WING 2

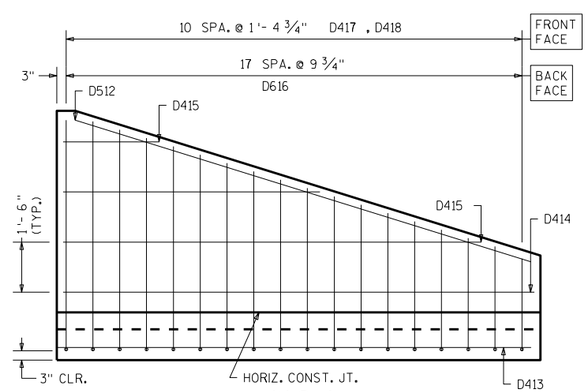

WING 4

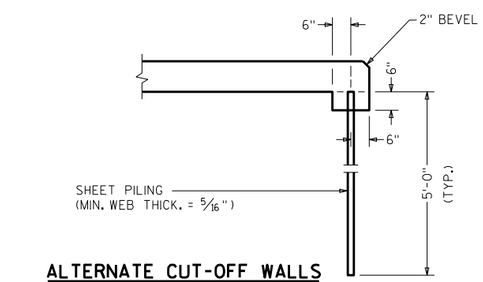

ALTERNATE CUT-OFF WALLS

THE ABOVE ALT. MAY BE USED IN LIEU OF THE CAST-IN-PLACE CONC. CUT-OFF WALLS. PAYMENT WILL BE BASED ON THE CONC. CUT-OFF WALLS.

8

8

NO.	DATE	REVISION	BY

STATE OF WISCONSIN
DEPARTMENT OF TRANSPORTATION
STRUCTURES DESIGN SECTION

STRUCTURE C-8-76

DRAWN BY DFD PLANS CK'D. NAR

APRON DETAILS

SHEET 3

189

SCALE = 4

STATE PROJECT NUMBER

1500-32-71

BILL OF BARS

THE FIRST DIGIT OF THE BAR MARK SIGNIFIES THE BAR SIZE.
THE DIMENSION IN THE BENT COLUMN IS THE OUT TO OUT HORIZONTAL LEG OF AN L - SHAPED BAR.

BAR MARK	COAT	NO. REQ'D.	LENGTH	BENT	BAR SERIES	LOCATION
U401		22	3 - 6	1 - 0		INLET APRON AND CUTOFF WALL
U402		3	26 - 3			INLET APRON AND CUTOFF WALL
U403		10	20 - 6		*	" APRON
U404		14	13 - 10			" APRON
U405		3	6 - 6		*	" APRON
U406		5	6 - 7		*	" APRON
U507		2	15 - 8			WING 1 -HORIZONTAL - BOTH FACES
U408		2	15 - 4			WING "-HORIZONTAL -APRON BOTT. SLAB
U409		2	15 - 4			WING "-HORIZONTAL - BOTH FACES
U410		6	8 - 3		*	WING "-HORIZONTAL - BOTH FACES
U611	X	20	10 - 7	6 - 1	*	WING "-VERTICAL - BACK FACE
U412		12	3 - 7		*	WING "-VERTICAL - FRONT FACE
U513		2	10 - 9			WING 2 -HORIZONTAL - BOTH FACES
U414		2	10 - 1			WING "-HORIZONTAL -APRON BOTT. SLAB
U415		2	10 - 1			WING "-HORIZONTAL - BOTH FACES
U416		6	5 - 6		*	WING "-HORIZONTAL - BOTH FACES
U617	X	14	10 - 7	6 - 1	*	WING "-VERTICAL - BACK FACE
U418		8	3 - 7		*	WING "-VERTICAL - FRONT FACE
U419	X	20	2 - 2			WINGS 1 AND 2 - DOWELS - FRONT FACE
D401		18	5 - 6	1 - 0		OUTLET APRON AND CUTOFF WALL
D402		5	19 - 6			OUTLET APRON AND CUTOFF WALL
D403		10	17 - 2		*	" APRON
D404		14	13 - 10			" APRON
D405		4	6 - 0		*	" APRON
D506		2	11 - 7			WING 3 -HORIZONTAL - BOTH FACES
D407		2	11 - 0			WING "-HORIZONTAL -APRON BOTT. SLAB
D408		2	11 - 0			WING "-HORIZONTAL - BOTH FACES
D409		6	6 - 0		*	WING "-HORIZONTAL - BOTH FACES
D610	X	15	10 - 7	6 - 1	*	WING "-VERTICAL - BACK FACE
D411		9	3 - 7		*	WING "-VERTICAL - FRONT FACE
D512		2	14 - 4			WING 4 -HORIZONTAL - BOTH FACES
D413		2	13 - 11			WING "-HORIZONTAL -APRON BOTT. SLAB
D414		2	13 - 11			WING "-HORIZONTAL - BOTH FACES
D415		6	7 - 7		*	WING "-HORIZONTAL - BOTH FACES
D616	X	18	10 - 7	6 - 1	*	WING "-VERTICAL - BACK FACE
D417		11	3 - 7		*	WING "-VERTICAL - FRONT FACE
D418	X	20	2 - 2			WINGS 3 AND 4 - DOWELS - FRONT FACE

* LENGTH SHOWN FOR BAR IS AN AVERAGE LENGTH AND SHOULD ONLY BE USED FOR BAR WEIGHT CALCULATIONS. SEE BAR SERIES TABLE FOR ACTUAL LENGTHS.

BAR SERIES TABLE

--- BUNDLE AND TAG EACH SERIES SEPARATELY

BAR MARK	NO. REQ'D.	LENGTHS FOR EACH SERIES
U403	1 SERIES OF 10	15 - 1 TO 25 - 10
U405	1 SERIES OF 3	3 - 10 TO 9 - 1
U406	1 SERIES OF 5	3 - 3 TO 9 - 11
U410	2 SERIES OF 3	2 - 11 TO 13 - 7
U611	1 SERIES OF 20	8 - 6 TO 12 - 8
U412	1 SERIES OF 12	1 - 5 TO 5 - 8
U416	2 SERIES OF 3	2 - 0 TO 9 - 0
U617	1 SERIES OF 14	8 - 5 TO 12 - 8
U418	1 SERIES OF 8	1 - 5 TO 5 - 8
D403	1 SERIES OF 10	14 - 9 TO 19 - 7
D405	1 SERIES OF 4	2 - 7 TO 9 - 5
D409	2 SERIES OF 3	2 - 2 TO 9 - 10
D610	1 SERIES OF 15	8 - 6 TO 12 - 8
D411	1 SERIES OF 9	1 - 5 TO 5 - 8
D415	2 SERIES OF 3	2 - 8 TO 12 - 5
D616	1 SERIES OF 18	8 - 5 TO 12 - 8
D417	1 SERIES OF 11	1 - 5 TO 5 - 8

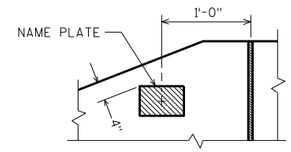

NAME PLATE LOCATION
WING 4

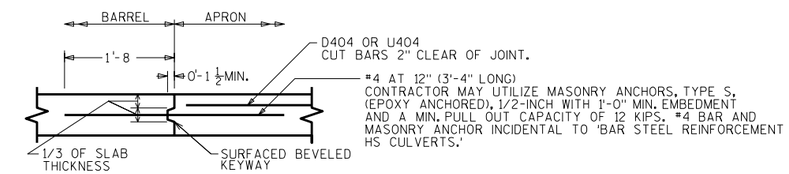

OPTIONAL CONSTRUCTION JOINT

2" DEEP SAW CUT WITHIN 12 HOURS AFTER POURING MAY BE USED IN LIEU OF CONST. JT. IN BOTTOM SLAB.

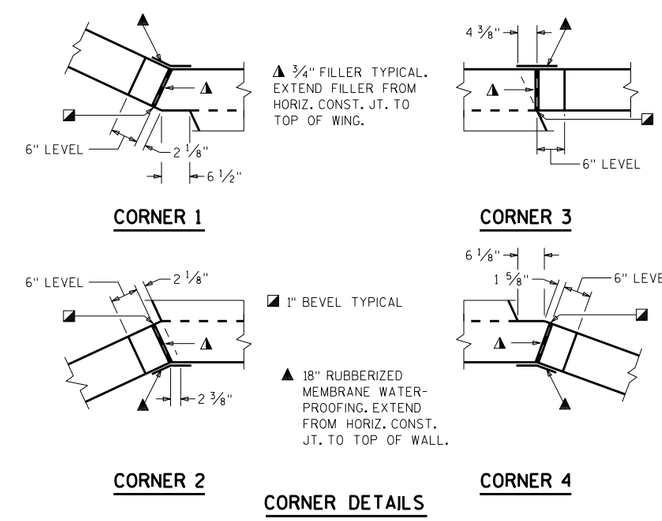

CORNER 1 CORNER 3 CORNER 2 CORNER 4

CORNER DETAILS

8

8

NO.	DATE	REVISION	BY

STATE OF WISCONSIN
DEPARTMENT OF TRANSPORTATION
STRUCTURES DESIGN SECTION

STRUCTURE C-8-76

DRAWN BY DFD PLANS CK'D. NAR

DETAILS

SHEET 4

190

SCALE = 4

STH 32/57 (USH 10) OVER DRAINAGE WAY
APPLETON TO MANITOWOC

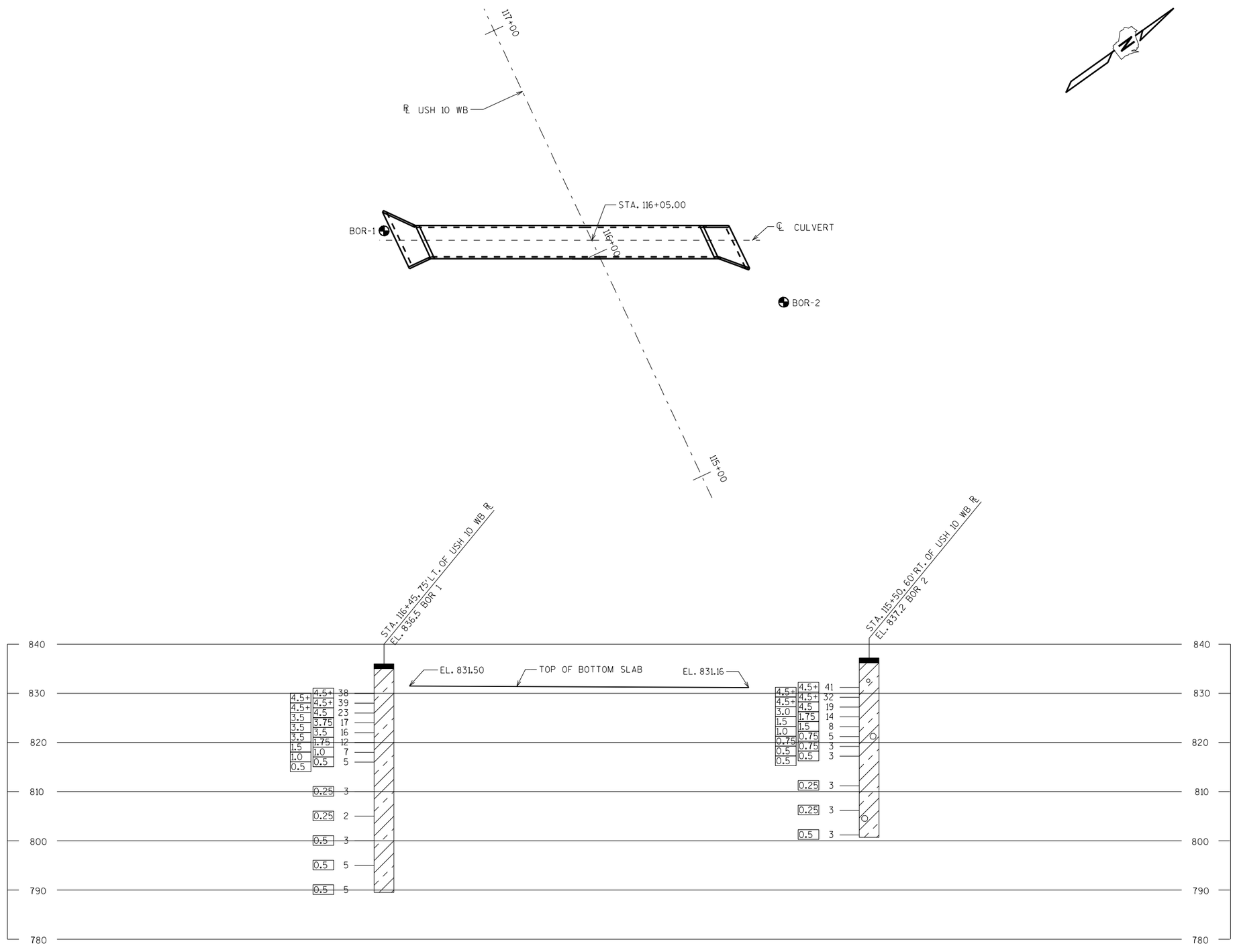

STATE PROJECT NUMBER

1500-32-71

ABBREVIATIONS

F — FINE M — MEDIUM C — COARSE
WS — WEATHERED SO — SOUND

MATERIAL SYMBOLS

TOPSOIL, SILT, SANDSTONE, SAND, PEAT, LIMESTONE, GRAVEL, CLAY, IGNEOUS ROCK

LEGEND OF PROBING

PROBING NO.
STA.
ELEVATION
7 AVERAGE BLOWS PER FOOT
REFUSAL 95/6

95/6=95 BLOWS FOR 6" PENETRATION PROBING TAKEN WITH A 350# WT. FALLING 18" ON A 2" O.D. POINT.

LEGEND OF BORING

BORING NO.
ELEV.
STA.
UNCONFINED STRENGTH → 7.7
7
BLOWS PER FT. USING 140# WT. FALLING 30"
WASH SAMPLE
SHELBY TUBE — S.T.
GROUND WATER ELEVATION
NO GROUND WATER OBSERVED ABOVE THIS ELEVATION
SANDY GRAVEL
F. BOULDERS OR COBBLES
SAND
SILTY CLAY
SO LIMESTONE

UNLESS OTHERWISE SPECIFIED, THE BLOWS PER FOOT AT THE LOCATIONS INDICATED ARE BASED ON DRIVING A 2" O.D. X 1.4" I.D. SPLIT SPOON SAMPLER WITH A 140# HAMMER HAVING A FREE FALL OF 30". THE BLOW COUNT IS TAKEN IN UNDISTURBED SOIL IMMEDIATELY BELOW A CASED OR OPEN HOLE ELIMINATING SIDE FRICTION ON THE DRIVE PIPE.

SUBSURFACE EXPLORATION FOR FOUNDATION DESIGN AND BIDDERS INFORMATION

TO OBTAIN RELATIVE DATA CONCERNING THE CHARACTER OF MATERIAL IN AND UPON WHICH THE FOUNDATION MIGHT BE BUILT, BORINGS AND/OR SOUNDINGS WERE MADE AT POINTS APPROXIMATELY AS INDICATED ON THIS DRAWING. THE DATA PRESENTED HEREIN REPRESENTS THE FINDINGS OF THE SUBSURFACE EXPLORATIONS MADE. HOWEVER, BECAUSE THE DEPTHS INVESTIGATED ARE LIMITED AND THE AREA OF THE BORINGS AND/OR SOUNDINGS IS VERY SMALL IN RELATION TO THE ENTIRE AREA, THE WISCONSIN DEPARTMENT OF TRANSPORTATION DOES NOT WARRANT CONDITIONS BELOW THE DEPTHS INVESTIGATED OR THAT THE CLASSIFICATION OF MATERIAL ENCOUNTERED IN THESE INVESTIGATIONS IS NECESSARILY TYPICAL OF THE ENTIRE SITE.

NO.	DATE	REVISION	BY

STATE OF WISCONSIN
DEPARTMENT OF TRANSPORTATION
STRUCTURES DESIGN SECTION

STRUCTURE C-8-76

DRAWN BY PR/MAS PLANS CK'D. NAR

SUBSURFACE EXPLORATION

SHEET 5

SCALE = 10

8

8

STATE PROJECT NUMBER

1500-32-71

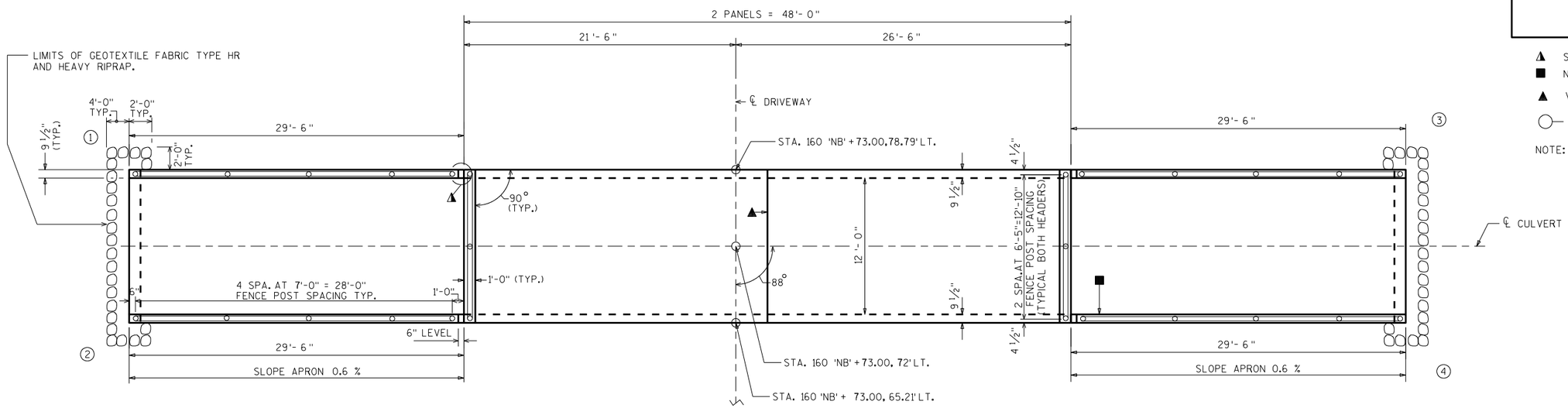

PLAN

▲ SEE CORNER DETAILS
■ NAME PLATE LOCATION (SEE SHT 4)
▲ VERT. CONST. JOINT
◯ INDICATES WING NUMBER

NOTE: STRUCTURE BACKFILL REQUIRED BEHIND ALL WING WALLS.

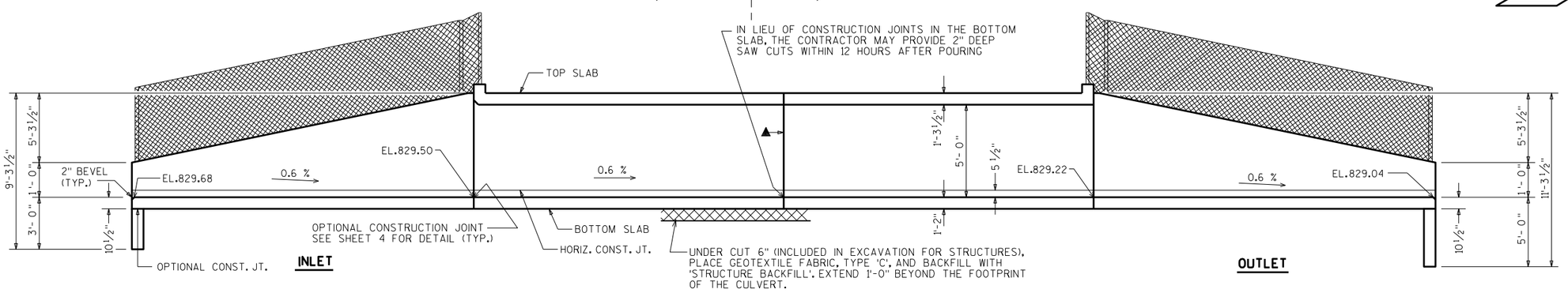

INLET

OUTLET

ELEVATION

LIST OF DRAWINGS

1. LAYOUT
2. BOX DETAILS
3. APRON DETAILS
4. DETAILS
5. FENCE DETAILS
6. SUBSURFACE EXPLORATION

DESIGN DATA

LIVE LOAD:

DESIGN LOADING: HL-93
INVENTORY RATING FACTOR: RF=1.05
OPERATING RATING FACTOR: RF=1.35
WISCONSIN STANDARD PERMIT VEHICLE (WIS.-SPV): 255 (KIPS)

EARTHLOAD: DESIGNED FOR 2.0 FT. OF FILL.

ULTIMATE DESIGN STRESSES:

CONCRETE MASONRY, GRADE A-FA — f'_c = 3500 P.S.I.
HIGH STRENGTH BAR STEEL REINFORCEMENT — f_y = 60000 P.S.I.

INVERTS SET 6" BELOW STREAMBED.

TRAFFIC VOLUME

STH 32/57
A.D.T. = 11200 (2031)
R.D.S. = 60 M.P.H.

HYDRAULIC DATA

100 YEAR FREQUENCY
Q_{100} = 212 C.F.S.
VEL. = 5.7 F.P.S.
HW. = EL. 833.9
DRAINAGE AREA = 0.5 SQ. MI.
OVERTOPPING RDWY. = N.A.

2 YEAR FREQUENCY
Q_{100} = 51 C.F.S.
HW_2 = 832.1

TOTAL ESTIMATED QUANTITIES

203.0200	REMOVING OLD STRUCTURE STA. 160 'NB' + 35,	1	LS
206.2000	EXCAVATION FOR STRUCTURES CULVERTS C-8-77	1	LS
210.0100	BACKFILL STRUCTURE	500	CY
504.0100	CONCRETE MASONRY CULVERTS	116	CY
505.0410	BAR STEEL REINFORCEMENT HS CULVERTS	6,185	LB
505.0610	BAR STEEL REINFORCEMENT HS COATED CULVERTS	6,025	LB
516.0500	RUBBERIZED MEMBRANE WATERPROOFING	30	SY
606.0300	RIPRAP HEAVY	12	CY
616.0205	FENCE CHAIN LINK 5-FT.	144	LF
645.0105	GEOTEXTILE FABRIC TYPE C	200	SY
645.0120	GEOTEXTILE FABRIC TYPE HR	40	SY

NON-BID ITEMS

FILLER — 3/4" SIZE

GENERAL NOTES

REMOVE EXISTING STRUCTURE AT STA. 160'NB' + 35, 49' LT. A PAIR OF 36" C.M.P.

DRAWINGS SHALL NOT BE SCALED.

BAR STEEL REINFORCEMENT SHALL BE EMBEDDED 2" CLEAR UNLESS SHOWN OR NOTED OTHERWISE.

THE UPPER LIMITS OF EXCAVATION FOR STRUCTURES SHALL BE THE EXISTING GROUNDLINE.

ALL SPACES EXCAVATED AND NOT OCCUPIED BY THE NEW STRUCTURE SHALL BE BACKFILLED WITH STRUCTURE BACKFILL TO THE TOP OF THE BOX WITHIN THE LENGTH OF THE CULVERT.

THE CONCRETE IN THE CUTOFF WALLS MAY BE PLACED UNDERWATER IF THE EXCAVATION CANNOT BE DEWATERED.

PLACE A 18" (MIN.) WIDE SHEET OF 'RUBBERIZED MEMBRANE WATERPROOFING' ON TOP SLAB OVER ALL CONSTRUCTION JOINTS AND EXTEND DOWN TO BOTTOM OF OUTSIDE WALLS.

THE CONTRACTOR MAY FURNISH A PRECAST CONCRETE BOX CULVERT IN LIEU OF THE CAST-IN-PLACE BOX CULVERT WITH THE ACCEPTANCE OF THE SHOP DRAWINGS BY THE STRUCTURES DEVELOPMENT SECTION. THE PRECAST CONCRETE BOX CULVERT SHALL CONFORM TO PRECAST DETAILS ON CHAPTER 36 STANDARDS OF THE CURRENT WISC. DOT BRIDGE MANUAL. PAYMENT FOR THE PRECAST CULVERT SHALL BE BASED ON THE QUANTITIES AND PRICES BID FOR THE ITEMS LISTED IN THE "TOTAL ESTIMATED QUANTITIES".

STRUCTURE DESIGN CONTACT:
DANIELLE DE TENNIS (608) 266-8689
LAURA SHADEWALD (608) 267-9592

NO.	DATE	REVISION	BY

Plans Prepared By WISDOT
BUREAU OF STRUCTURES

ACCEPTED William C. Dreher LLS 5/31/12
CHIEF STRUCTURES DESIGN ENGINEER DATE

STRUCTURE C-8-77

DRIVEWAY OVER DRAINAGE WAY

COUNTY CALUMET | ~~TOWN/CITY~~/VILLAGE FOREST JUNCTION

DESIGN SPEC. AASHTO LRFD DESIGN SPEC. 5th EDITION

DESIGNED BY DFD | DESIGN CK'D. NAR | DRAWN BY DFD | PLANS CK'D. NAR

LAYOUT

SHEET 1 OF 6

192

8

8

SCALE = 4

I.D. 1500-32-00

DATE: APRIL 2012

STATE PROJECT NUMBER

1500-32-71

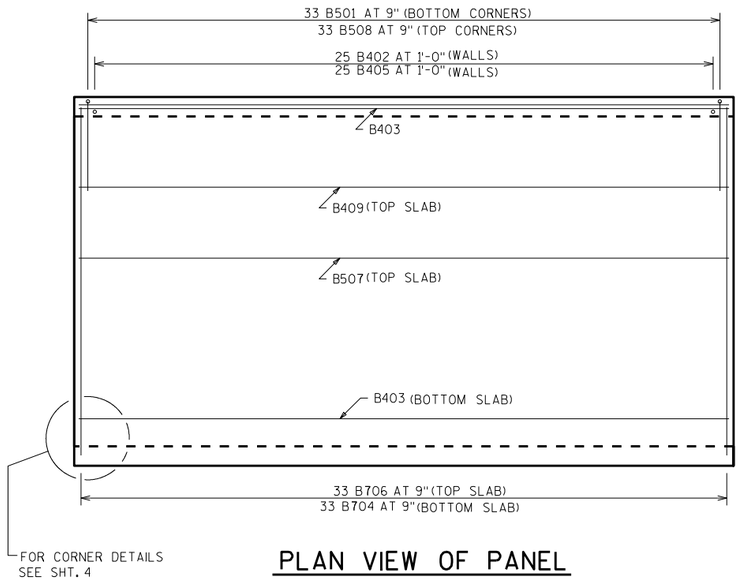

PLAN VIEW OF PANEL

USE IDENTICAL STEEL IN OTHER PANELS.
APRON AND HEADER ARE NOT SHOWN.

BILL OF BARS

NOTE: THE FIRST OR FIRST TWO DIGITS OF THE BAR MARK SIGNIFIES THE BAR SIZE.

BAR MARK	COAT	NO. REQ'D.	LENGTH	BENT	BAR SERIES	LOCATION
B501		132	7-1	X		BOTTOM CORNERS
B402		100	2-6			WALLS-DOWELS-VERT.
B403		44	23-6			BOTTOM SLAB & WALL
B704		66	13-3			BOTTOM SLAB TRANS.
B405		100	5-8			WALLS VERT.
B706	X	66	13-3			TOP SLAB TRANS
B507	X	24	23-6			TOP SLAB LONGIT.
B508	X	132	7-1	X		TOP CORNERS
B409	X	12	23-6			TOP SLAB
B410	X	4	13-3			HEADERS HORIZ.
B311	X	19	3-7	X		HEADERS STIRUPPS VERT. INLET
B312	X	19	3-11	X		HEADERS STIRUPPS VERT. OUTLET
B513	X	37	4-0			VERT. CONST. JT.

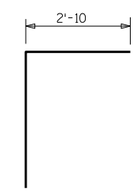

B501,B508

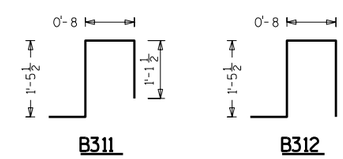

B311 B312

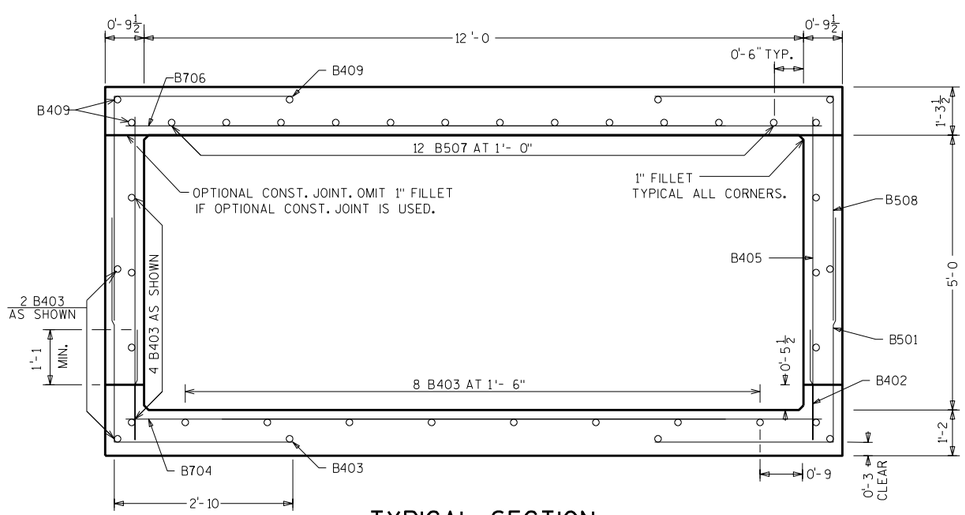

TYPICAL SECTION THRU BOX

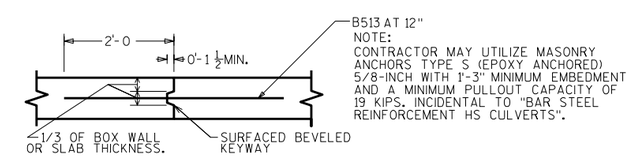

VERTICAL CONSTRUCTION JOINT

2" DEEP SAW CUT WITHIN 12 HOURS AFTER POURING MAY BE USED IN LIEU OF CONST. JT. IN BOTTOM SLAB.

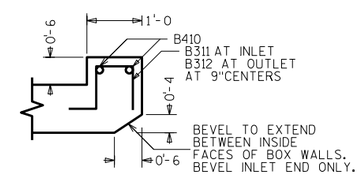

SECTION THRU TOP HEADER

8

8

NO.	DATE	REVISION	BY

STATE OF WISCONSIN
DEPARTMENT OF TRANSPORTATION
STRUCTURES DESIGN SECTION

STRUCTURE C-8-77

DRAWN BY DFD PLANS CK'D. NAR

BOX DETAILS

SHEET 2

193

SCALE = 4

STATE PROJECT NUMBER

1500-32-71

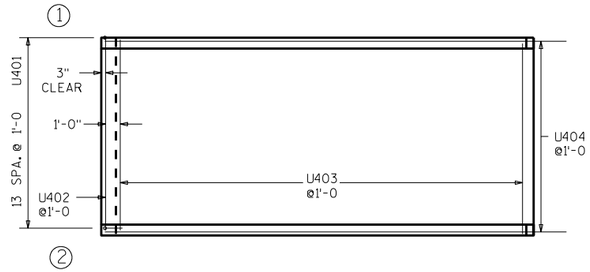

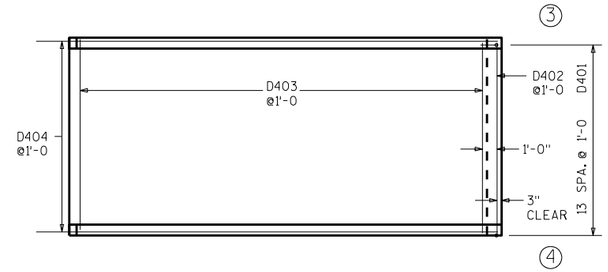

APRON REINF.

▲ 18" RUBBERIZED MEMBRANE WATER-PROOFING. PLACE ALONG HORIZ. CONST. JT. FOR ENTIRE WING LENGTH (TYP.).

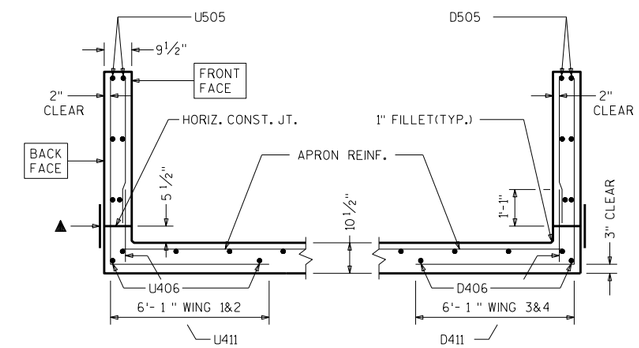

SECTION THRU WINGS

AT RIGHT ANGLES TO WING WALLS

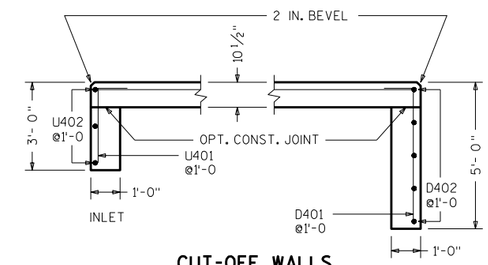

CUT-OFF WALLS

SECTION THRU THE WALLS

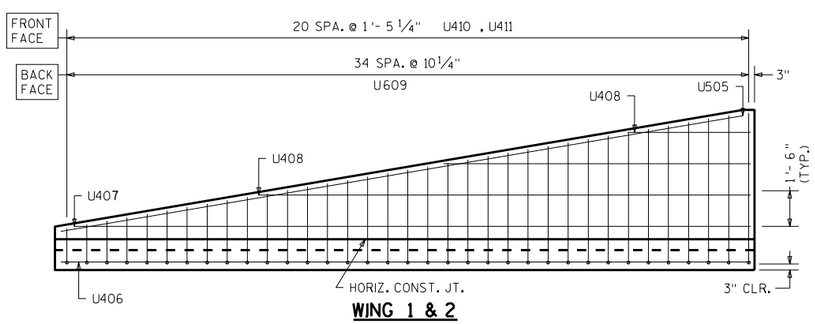

WING 1 & 2

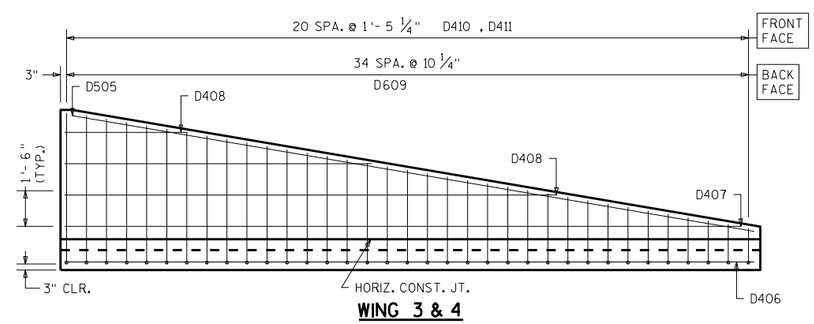

WING 3 & 4

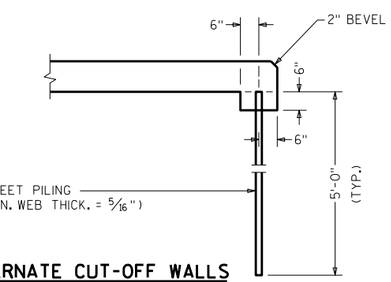

ALTERNATE CUT-OFF WALLS

THE ABOVE ALT. MAY BE USED IN LIEU OF THE CAST-IN-PLACE CONC. CUT-OFF WALLS. PAYMENT WILL BE BASED ON THE CONC. CUT-OFF WALLS.

8

8

NO.	DATE	REVISION	BY

STATE OF WISCONSIN
DEPARTMENT OF TRANSPORTATION
STRUCTURES DESIGN SECTION

STRUCTURE C-8-77

DRAWN BY DFD PLANS CK'D. NAR

APRON DETAILS

SHEET 3

194

SCALE = 4

STATE PROJECT NUMBER

1500-32-71

BILL OF BARS

THE FIRST DIGIT OF THE BAR MARK SIGNIFIES THE BAR SIZE.
THE DIMENSION IN THE BENT COLUMN IS THE OUT TO OUT HORIZONTAL LEG OF AN L - SHAPED BAR.

BAR MARK	COAT	NO. REQ'D.	LENGTH	BENT	BAR SERIES	LOCATION
U401		14	3 - 6	1 - 0		INLET APRON AND CUTOFF WALL
U402		3	13 - 3			INLET APRON AND CUTOFF WALL
U403		29	13 - 3			" APRON
U404		14	31 - 6			" APRON
U505		4	29 - 4			WINGS 1 AND 2 -HORIZONTAL -BOTH FACES
U406		4	29 - 0			WING " -HORIZONTAL -APRON BOTT. SLAB
U407		4	29 - 0			WING " -HORIZONTAL - BOTH FACES
U408		12	12 - 8		*	WING " -HORIZONTAL - BOTH FACES
U609	X	70	10 - 1	6 - 1	*	WING " -VERTICAL - BACK FACE
U410		42	3 - 0		*	WING " -VERTICAL - FRONT FACE
U411	X	42	2 - 2			WINGS 1 AND 2 - DOWELS - FRONT FACE
D401		14	5 - 6	1 - 0		OUTLET APRON AND CUTOFF WALL
D402		5	13 - 3			OUTLET APRON AND CUTOFF WALL
D403		29	13 - 3			" APRON
D404		14	31 - 6			" APRON
D505		4	29 - 4			WINGS 3 AND 4 -HORIZONTAL -BOTH FACES
D406		4	29 - 0			WING " -HORIZONTAL -APRON BOTT. SLAB
D407		4	29 - 0			WING " -HORIZONTAL - BOTH FACES
D408		12	12 - 8		*	WING " -HORIZONTAL - BOTH FACES
D609	X	70	10 - 1	6 - 1	*	WING " -VERTICAL - BACK FACE
D410		42	3 - 0		*	WING " -VERTICAL - FRONT FACE
D411	X	42	2 - 2			WINGS 3 AND 4 - DOWELS - FRONT FACE

* LENGTH SHOWN FOR BAR IS AN AVERAGE LENGTH AND SHOULD ONLY BE USED FOR BAR WEIGHT CALCULATIONS. SEE BAR SERIES TABLE FOR ACTUAL LENGTHS.

BAR SERIES TABLE

--- BUNDLE AND TAG EACH SERIES SEPARATELY

BAR MARK	NO. REQ'D.	LENGTHS FOR EACH SERIES
U408	4 SERIES OF 3	4 - 5 TO 20 - 10
U609	2 SERIES OF 35	7 - 5 TO 12 - 8
U410	2 SERIES OF 21	0 - 4 TO 5 - 8
D408	4 SERIES OF 3	4 - 5 TO 20 - 10
D609	2 SERIES OF 35	7 - 5 TO 12 - 8
D410	2 SERIES OF 21	0 - 4 TO 5 - 8

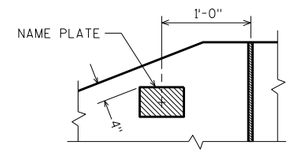

NAME PLATE LOCATION
WING 4

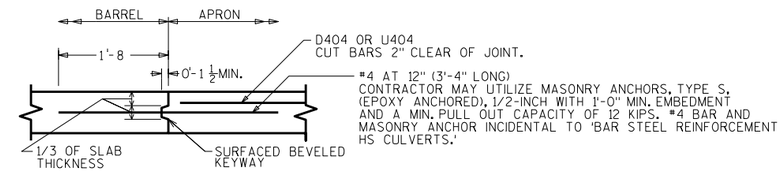

OPTIONAL CONSTRUCTION JOINT

2" DEEP SAW CUT WITHIN 12 HOURS AFTER POURING MAY BE USED IN LIEU OF CONST. JT. IN BOTTOM SLAB.

◭ 3/4" FILLER TYPICAL. EXTEND FILLER FROM HORIZ. CONST. JT. TO TOP OF WING.

CORNER 1

CORNER 3

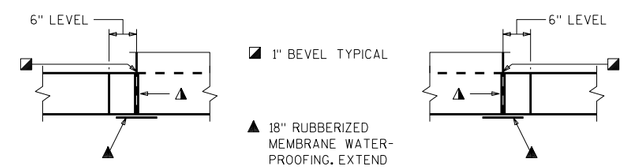

◪ 1" BEVEL TYPICAL

▲ 18" RUBBERIZED MEMBRANE WATER-PROOFING. EXTEND FROM HORIZ. CONST. JT. TO TOP OF WALL.

CORNER 2

CORNER 4

CORNER DETAILS

8

8

NO.	DATE	REVISION	BY

STATE OF WISCONSIN
DEPARTMENT OF TRANSPORTATION
STRUCTURES DESIGN SECTION

STRUCTURE C-8-77

DRAWN BY DFD | PLANS CK'D. NAR

DETAILS

SHEET 4

195

SCALE = 4

STATE PROJECT NUMBER

1500-32-71

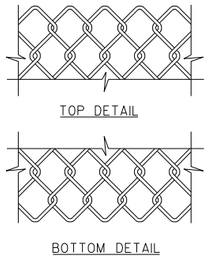

FENCE FABRIC

FENCE FABRIC WOVEN OF 9-GAUGE WIRE IN 2" DIAMOND PATTERN MESH WITH BOTH THE TOP AND BOTTOM SELVAGES KNUCKLED.

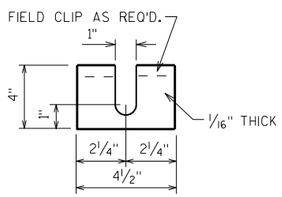

POST SHIM DETAILS

SHIMS REQUIRED ONLY WHEN POSTS ARE WELDED TO BASE PLATES. PROVIDE 4 SHIMS PER POST.

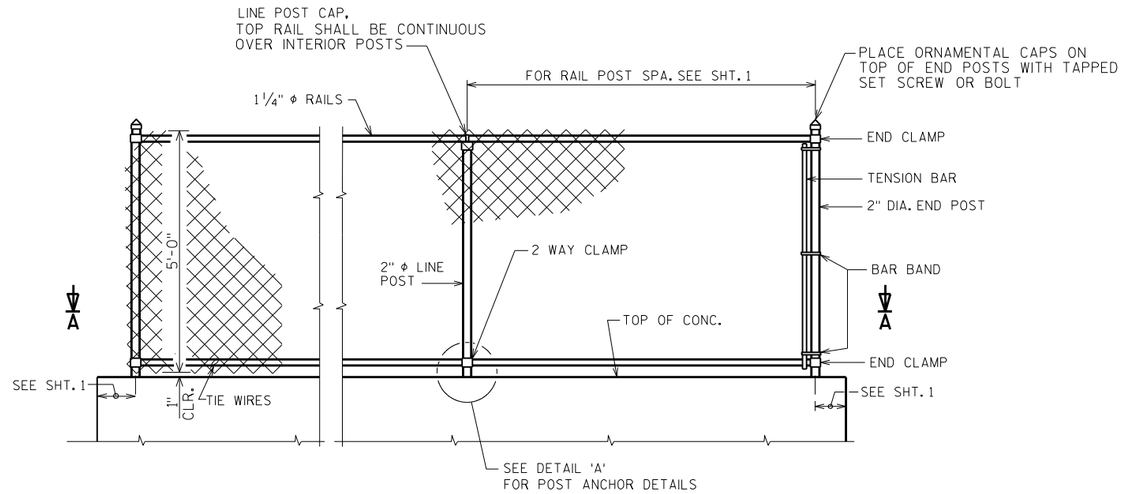

FENCE PART ELEVATION

INSIDE ELEVATION

GENERAL NOTES

BID ITEM SHALL BE "FENCE CHAIN LINK 5-FT" WHICH INCLUDES ALL ITEMS SHOWN.

POSTS ARE TO BE SET VERTICAL.

ALL FENCING COMPONENTS SHALL BE GALVANIZED STEEL OR APPROVED ALTERNATE FENCING MATERIALS. THEY ARE ALUMINUM, ALUMINUM COATED STEEL AND APPROVED COLOR COATING SYSTEMS. IF ALTERNATE MATERIALS ARE USED FOR POSTS & RAILS, THESE ELEMENTS SHOULD BE DESIGNED.

ALL RAILS, POSTS AND SLEEVES ARE STANDARD WEIGHT PIPE, SCHEDULE 40.

TOP RAIL SHALL BE CONTINUOUS OVER INTERIOR POSTS. MINIMUM LENGTH OF TOP RAIL BETWEEN SPLICES SHALL BE 20'-0". PLACE TOP RAIL SPLICES NEAR 1/4 POINTS OF POST SPACING. NO. 9 GAGE TIES AT 9" SPACING REQ'D. ON RAILS & POSTS WITHOUT TENSION BARS.

* ALTERNATE BOULEVARD 2-WAY CLAMP MAY BE USED WHEN THE POST IS EITHER BOLTED TO THE 3 1/2"Φ SLEEVE OR DIRECTLY WELDED TO THE BASE PLATE.

◭ 1/2" DIA. X 6 7/8" LONG GALVANIZED HEX BOLT WITH NUT & WASHER. TYPE S, 1/2" Φ CONCRETE MASONRY ANCHORS MAY BE SUBSTITUTED FOR 1/2" Φ BOLTS. ANCHOR PLATE NOT REQUIRED WHEN TYPE S ANCHORS ARE USED. SEE ✪

✪ 1/2" CONCRETE MASONRY ANCHOR, TYPE "S" 6" MIN. EMBEDMENT (EPOXY ANCHORED MIN. PULLOUT OF 10 KIPS, THREADED LENGTH OF ANCHOR, WASHER, AND NUT SHALL BE GALVANIZED.

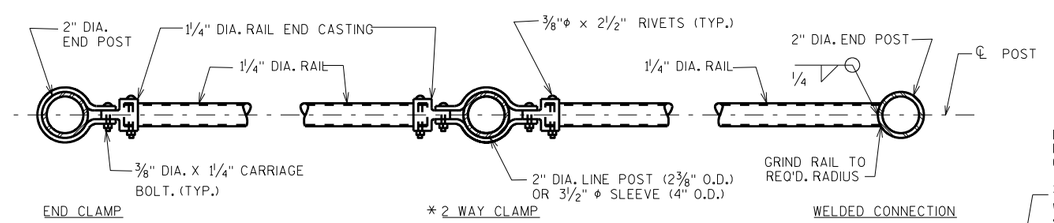

SECTION A-A

NOTE: PLACE ALL NUTS ON OUTSIDE OF FENCE
USE HARDWARE AS DETAILED

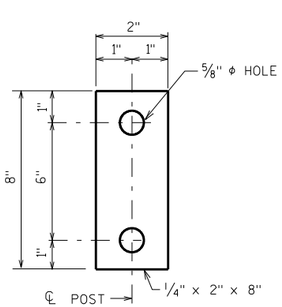

ANCHOR PLATE

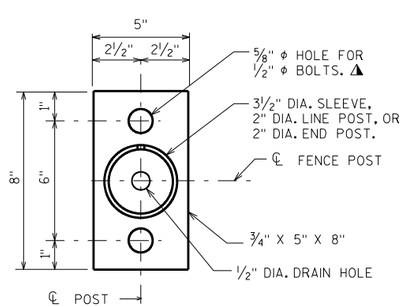

BASE PLATE

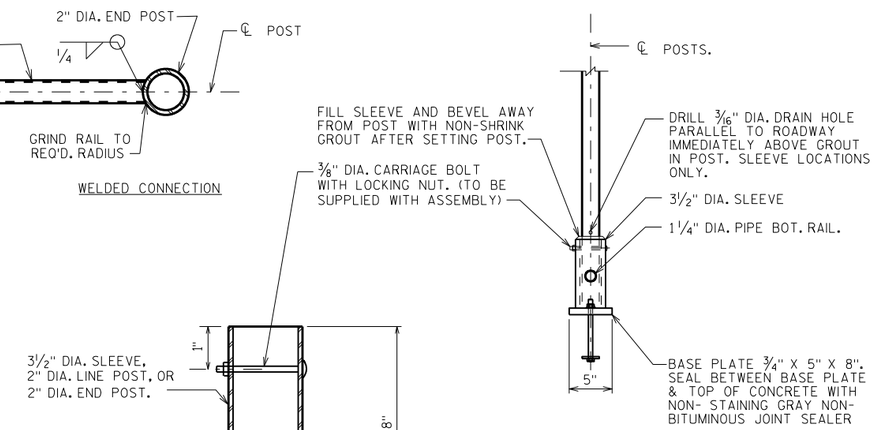

ELEVATION

POST ATTACHMENT

UNIT SHALL BE GALV. AFTER FABRICATION

NOTE: IN LIEU OF USING THE 3 1/2" Φ SLEEVE, THE 2" Φ FENCE POST MAY BE WELDED TO THE BASE PLATE.

DETAIL A

NO.	DATE	REVISION	BY

STATE OF WISCONSIN
DEPARTMENT OF TRANSPORTATION
STRUCTURES DESIGN SECTION

STRUCTURE C-8-77

DRAWN BY CF PLANS CK'D. NAR

FENCE DETAILS

SHEET 5

196

8

8

11

12

SCALE = 5.33333

STH 32/57 (PRIVATE DRIVE) OVER DRAINAGE WAY
APPLETON TO MANITOWOC

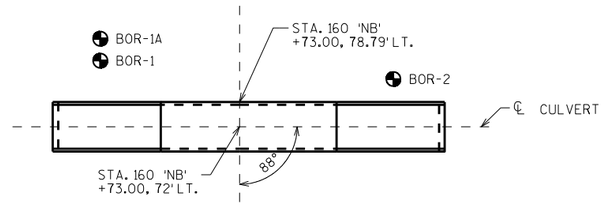

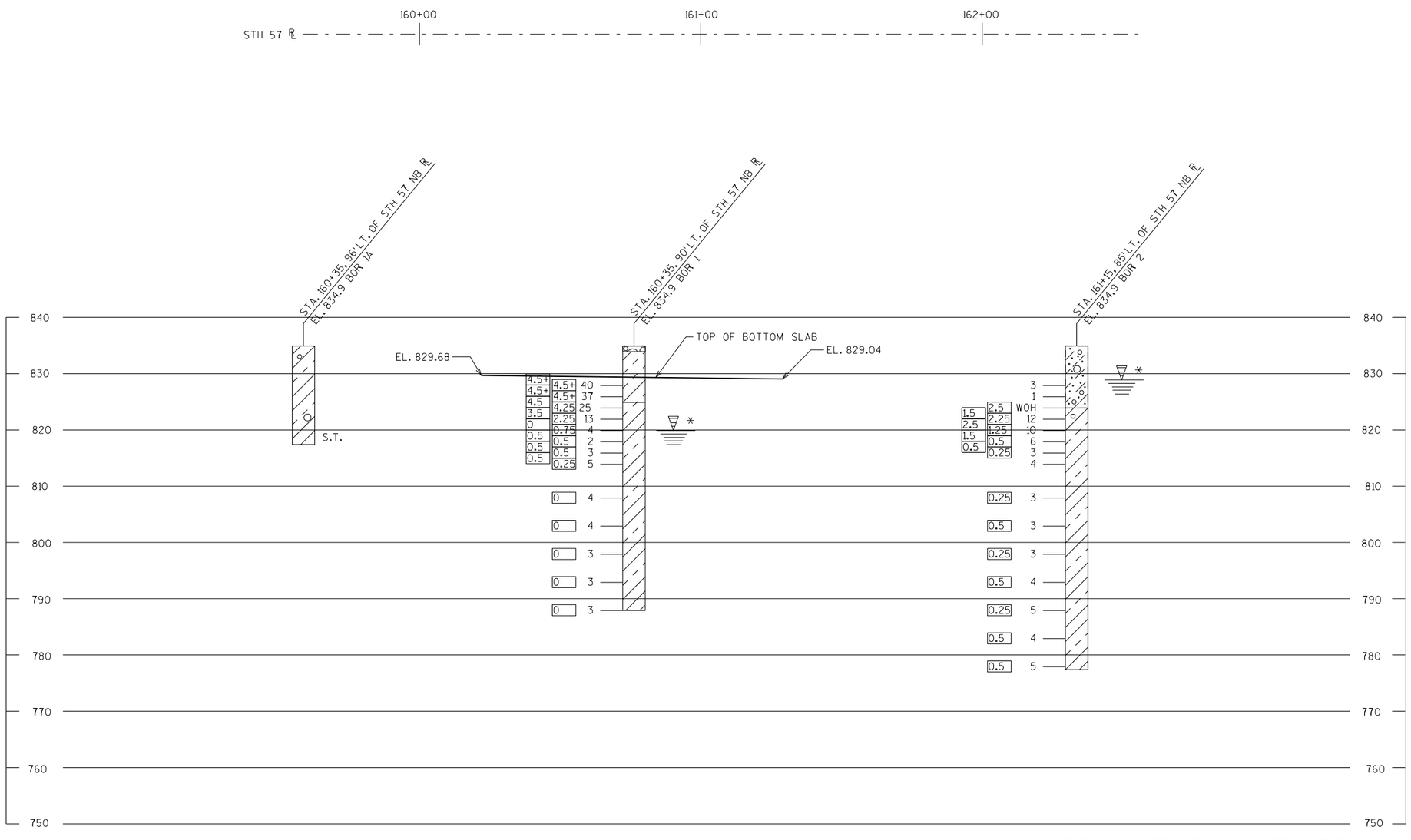

* THE GROUND WATER ELEVATION WAS DETERMINED FROM WHERE THE SOIL SAMPLE WAS DESCRIBED AS WET.

STATE PROJECT NUMBER

1500-32-71

ABBREVIATIONS

F — FINE M — MEDIUM C — COARSE
WS — WEATHERED SO — SOUND

MATERIAL SYMBOLS

TOPSOIL, SILT, SANDSTONE, SAND, PEAT, LIMESTONE, GRAVEL, CLAY, IGNEOUS ROCK

LEGEND OF PROBING

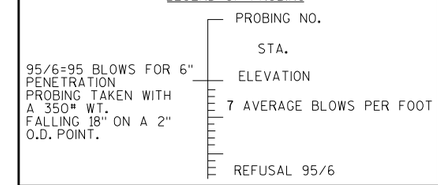

LEGEND OF BORING

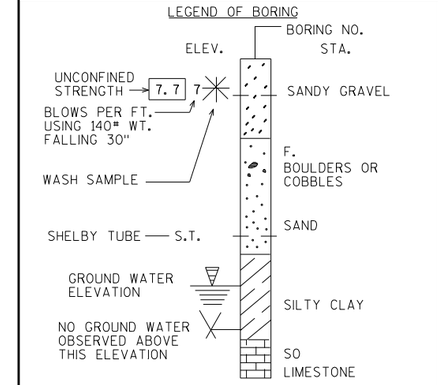

UNLESS OTHERWISE SPECIFIED, THE BLOWS PER FOOT AT THE LOCATIONS INDICATED ARE BASED ON DRIVING A 2" O.D. X 1.4" I.D. SPLIT SPOON SAMPLER WITH A 140# HAMMER HAVING A FREE FALL OF 30". THE BLOW COUNT IS TAKEN IN UNDISTURBED SOIL IMMEDIATELY BELOW A CASED OR OPEN HOLE ELIMINATING SIDE FRICTION ON THE DRIVE PIPE.

SUBSURFACE EXPLORATION FOR FOUNDATION DESIGN AND BIDDERS INFORMATION

TO OBTAIN RELATIVE DATA CONCERNING THE CHARACTER OF MATERIAL IN AND UPON WHICH THE FOUNDATION MIGHT BE BUILT, BORINGS AND/OR SOUNDINGS WERE MADE AT POINTS APPROXIMATELY AS INDICATED ON THIS DRAWING. THE DATA PRESENTED HEREIN REPRESENTS THE FINDINGS OF THE SUBSURFACE EXPLORATIONS MADE. HOWEVER, BECAUSE THE DEPTHS INVESTIGATED ARE LIMITED AND THE AREA OF THE BORINGS AND/OR SOUNDINGS IS VERY SMALL IN RELATION TO THE ENTIRE AREA, THE WISCONSIN DEPARTMENT OF TRANSPORTATION DOES NOT WARRANT CONDITIONS BELOW THE DEPTHS INVESTIGATED OR THAT THE CLASSIFICATION OF MATERIAL ENCOUNTERED IN THESE INVESTIGATIONS IS NECESSARILY TYPICAL OF THE ENTIRE SITE.

NO.	DATE	REVISION	BY

STATE OF WISCONSIN
DEPARTMENT OF TRANSPORTATION
STRUCTURES DESIGN SECTION

STRUCTURE C-8-77

DRAWN BY PR/MAS PLANS CK'D. NAR

SUBSURFACE EXPLORATION

SHEET 6

SCALE = 10

8

8

NOTES	
1 - CUT	CUT INCLUDES SALVAGED/UNUSABLE PAVMENT MATERIAL WITHIN NEW PAVEMENT SECTION AND EBS.
2- SALVAGED/UNUSABLE PAVEMENT MATERIAL	SALVAGED/UNUSABLE PAVEMENT MATERIAL WITHIN CUT IS ABOVE SUBGRDE SALVAGED/UNUSABLE PAVEMENT MATERIAL NOT WITHN CUT IS BELOW SUBGRADE
3 - FILL	INCLUDES VOLUME REQUIRED TO FILL UNUSABLE PAVEMENT EXC THAT IS NOT WITHIN CUT
4 - EXPANDED FILL FACTOR	EXPANDED FILL FACTOR = 1.25 EXPANDED FILL = (UNEXPANDED FILL) * FILL FACTOR

USH 10 EB WEST

		AREA (SF)					INCREMENTAL VOL (UNADJUSTED CY)					CUMULATIVE VOLUME (CY)			
STATION	DISTANCE FT	CUT	SALVAGED/UNUSABLE PAVEMENT MATERIAL (WITHIN CUT)	SALVAGED/UNUSABLE PAVEMENT MATERIAL (NOT WITHIN CUT)	FILL	EBS	CUT	SALVAGED/UNUSABLE PAVEMENT MATERIAL (WITHIN CUT)	SALVAGED/UNUSABLE PAVEMENT MATERIAL (NOT WITHIN CUT)	FILL	EBS NOTE 1	Available CUT 1.00	EXPANDED FILL 1.25	EXPANDED EBS BACKFILL 1.25	MASS ORDINATE NOTE 2
110+00	0	171	31	0	0	0	0	0	0	0	0	0	0	0	0
110+50	50	149	29	0	0	0	148	56	0	0	0	93	0	0	93
111+00	50	125	28	0	0	0	254	53	0	0	0	294	0	0	294
111+50	50	110	20	7	1	0	218	44	6	14	0	467	17	0	449
112+00	50	93	20	8	5	0	188	37	14	33	0	618	59	0	559
112+50	50	94	20	8	7	0	173	37	15	41	0	754	110	0	644
113+00	50	97	16	12	7	0	177	33	19	50	0	897	172	0	725
113+50	50	145	22	6	8	0	224	35	17	47	0	1,086	231	0	855
114+00	50	126	26	3	16	0	251	44	8	39	0	1,293	280	0	1,013
114+50	50	136	27	3	26	0	243	49	6	50	0	1,486	343	0	1,144
115+00	50	149	28	3	31	0	264	51	6	64	0	1,699	422	0	1,277
115+25	25	155	26	5	46	0	141	25	4	43	0	1,815	476	0	1,339
115+50	25	183	27	5	56	0	156	25	5	56	0	1,947	547	0	1,400
116+00	50	154	17	12	100	0	312	41	16	176	0	2,218	767	0	1,451
116+50	50	120	15	0	82	0	254	30	11	191	0	2,442	1,005	0	1,437
116+75	25	127	15	0	52	0	114	14	0	62	0	2,543	1,083	0	1,460
117+00	25	129	15	0	48	0	119	14	0	46	0	2,647	1,141	0	1,507
117+50	75	159	15	0	128	0	400	42	0	244	0	3,006	1,446	0	1,559
117+75	75	160	15	0	119	0	443	42	0	343	0	3,407	1,875	0	1,532
118+00	25	301	15	0	111	0	213	14	0	106	0	3,606	2,008	0	1,598
118+25	25	369	17	0	141	0	310	15	0	117	0	3,902	2,154	0	1,748
						TOTALS	4,601	700	125	1,723	0				

NOTES	
1 - CUT	CUT INCLUDES SALVAGED/UNUSABLE PAVMENT MATERIAL WITHIN NEW PAVEMENT SECTION AND EBS.
2- SALVAGED/UNUSABLE PAVEMENT MATERIAL	SALVAGED/UNUSABLE PAVEMENT MATERIAL WITHIN CUT IS ABOVE SUBGRDE SALVAGED/UNUSABLE PAVEMENT MATERIAL NOT WITHN CUT IS BELOW SUBGRADE
3 - FILL	INCLUDES VOLUME REQUIRED TO FILL UNUSABLE PAVEMENT EXC THAT IS NOT WITHIN CUT
4 - EXPANDED FILL FACTOR	EXPANDED FILL FACTOR = 1.25 EXPANDED FILL = (UNEXPANDED FILL) * FILL FACTOR

USH 10 EB EAST

STATION	DISTANCE FT	AREA (SF)					INCREMENTAL VOL (UNADJUSTED CY)					CUMULATIVE VOLUME (CY)			MASS ORDINATE NOTE 2
		CUT	SALVAGED/UNUSABLE PAVEMENT MATERIAL (WITHIN CUT)	SALVAGED/UNUSABLE PAVEMENT MATERIAL (NOT WITHIN CUT)	FILL	EBS	CUT	SALVAGED/UNUSABLE PAVEMENT MATERIAL (WITHIN CUT)	SALVAGED/UNUSABLE PAVEMENT MATERIAL (NOT WITHIN CUT)	FILL	EBS NOTE 1	Available CUT 1.00	EXPANDED FILL 1.25	EXPANDED EBS BACKFILL 1.25	
130+75	0	37	36	0	234	0	0	0	0	0	0	0	0	0	0
131+00	25	38	32	0	168	0	35	31	0	186	0	3	233	0	-229
131+25	25	41	31	0	168	0	37	29	0	156	0	11	427	0	-416
131+50	25	45	31	0	186	0	40	29	0	164	0	22	632	0	-610
131+66	16	48	31	0	197	0	28	18	0	113	0	31	774	0	-743
132+00	34	47	31	0	66	0	60	39	0	166	0	52	981	0	-929
132+50	50	47	31	0	78	0	87	57	0	133	0	81	1,147	0	-1,066
133+00	50	46	31	0	99	0	86	57	0	164	0	110	1,352	0	-1,242
133+50	50	52	29	0	93	0	91	56	0	178	0	145	1,575	0	-1,429
134+00	50	66	26	0	85	0	109	51	0	165	0	204	1,781	0	-1,577
134+50	50	74	25	0	81	0	130	47	0	154	0	286	1,973	0	-1,687
135+00	50	81	24	0	75	0	144	45	0	144	0	384	2,153	0	-1,769
135+50	50	88	26	0	57	0	156	46	0	122	0	494	2,306	0	-1,812
136+00	50	102	29	0	41	0	176	51	0	91	0	619	2,419	0	-1,800
136+50	50	120	32	0	18	0	206	56	0	55	0	768	2,488	0	-1,719
137+00	50	142	33	0	4	0	243	60	0	20	0	951	2,513	0	-1,562
137+50	50	156	32	0	1	0	276	60	0	5	0	1,167	2,519	0	-1,352
137+75	25	299	83	0	1	0	211	53	0	1	0	1,324	2,520	0	-1,196
138+00	25	304	83	0	0	0	279	77	0	0	0	1,526	2,521	0	-994
138+25	25	163	36	0	3	0	216	55	0	1	0	1,687	2,522	0	-835
138+50	25	163	30	0	0	0	151	31	0	1	0	1,808	2,524	0	-716
139+00	50	167	29	0	0	0	306	54	0	0	0	2,059	2,524	0	-465
139+50	50	180	24	0	0	0	321	49	0	0	0	2,332	2,524	0	-192
140+00	50	157	24	0	0	0	312	44	0	0	0	2,599	2,524	0	75
						TOTALS	3,697	1,098	0	2,019	0				

9

9

NOTES	
1 - CUT	CUT INCLUDES SALVAGED/UNUSABLE PAVMENT MATERIAL WITHIN NEW PAVEMENT SECTION AND EBS.
2- SALVAGED/UNUSABLE PAVEMENT MATERIAL	SALVAGED/UNUSABLE PAVEMENT MATERIAL WITHIN CUT IS ABOVE SUBGRDE SALVAGED/UNUSABLE PAVEMENT MATERIAL NOT WITHN CUT IS BELOW SUBGRADE
3 - FILL	INCLUDES VOLUME REQUIRED TO FILL UNUSABLE PAVEMENT EXC THAT IS NOT WITHIN CUT
4 - EXPANDED FILL FACTOR	EXPANDED FILL FACTOR = 1.25 EXPANDED FILL = (UNEXPANDED FILL) * FILL FACTOR

STH 32/57 NB SOUTH

STATION	DISTANCE FT	AREA (SF) CUT	AREA (SF) SALVAGED/UNUSABLE PAVEMENT MATERIAL (WITHIN CUT)	AREA (SF) SALVAGED/UNUSABLE PAVEMENT MATERIAL (NOT WITHIN CUT)	AREA (SF) FILL	AREA (SF) EBS	INCREMENTAL VOL (UNADJUSTED CY) CUT	INCREMENTAL VOL (UNADJUSTED CY) SALVAGED/UNUSABLE PAVEMENT MATERIAL (WITHIN CUT)	INCREMENTAL VOL (UNADJUSTED CY) SALVAGED/UNUSABLE PAVEMENT MATERIAL (NOT WITHIN CUT)	INCREMENTAL VOL (UNADJUSTED CY) FILL	INCREMENTAL VOL (UNADJUSTED CY) EBS NOTE 1	CUMULATIVE VOLUME (CY) Available CUT 1.00	CUMULATIVE VOLUME (CY) EXPANDED FILL 1.25	CUMULATIVE VOLUME (CY) EXPANDED EBS BACKFILL 1.25	MASS ORDINATE NOTE 2
147+25	0	123	30	0	1	0	0	0	0	0	0	0	0	0	0
147+50	25	131	30	0	3	0	118	28	0	2	0	90	2	0	88
148+00	50	150	30	0	9	0	260	56	0	11	0	294	16	0	278
148+50	50	127	30	0	8	0	256	56	0	16	0	495	36	0	459
149+00	50	117	30	0	17	0	226	56	0	23	0	666	65	0	601
149+50	50	99	30	0	26	0	200	56	0	40	0	810	115	0	696
150+00	50	101	30	0	30	0	185	56	0	52	0	940	179	0	760
150+50	50	131	30	0	9	0	215	56	0	36	0	1,099	225	0	875
151+00	50	104	30	0	42	0	218	56	0	47	0	1,261	284	0	978
151+50	50	102	30	0	59	0	191	56	0	94	0	1,396	400	0	996
152+00	50	102	30	0	78	0	189	56	0	127	0	1,530	559	0	971
152+50	50	106	30	0	92	0	193	56	0	157	0	1,667	756	0	911
153+00	50	111	28	2	92	0	201	54	2	174	0	1,814	973	0	841
153+50	50	117	26	4	92	0	211	50	6	181	0	1,975	1,200	0	775
154+00	50	184	25	5	70	0	279	47	8	167	0	2,206	1,409	0	798
154+50	50	136	17	8	41	0	296	39	12	127	0	2,464	1,567	0	897
155+00	50	149	10	0	56	0	264	25	7	105	0	2,703	1,698	0	1,005
155+50	50	160	10	0	43	0	286	19	0	92	0	2,970	1,813	0	1,158
156+00	50	145	12	0	75	0	282	20	0	109	0	3,232	1,949	0	1,283
156+25	25	357	13	0	109	0	232	12	0	85	0	3,453	2,056	0	1,398
156+50	25	339	15	0	88	0	322	13	0	91	0	3,763	2,170	0	1,593
156+75	25	330	16	0	92	0	310	14	0	83	0	4,058	2,274	0	1,784
						TOTALS	4,934	876	35	1,819	0				

NOTES	
1 - CUT	CUT INCLUDES SALVAGED/UNUSABLE PAVMENT MATERIAL WITHIN NEW PAVEMENT SECTION AND EBS.
2- SALVAGED/UNUSABLE PAVEMENT MATERIAL	SALVAGED/UNUSABLE PAVEMENT MATERIAL WITHIN CUT IS ABOVE SUBGRDE SALVAGED/UNUSABLE PAVEMENT MATERIAL NOT WITHN CUT IS BELOW SUBGRADE
3 - FILL	INCLUDES VOLUME REQUIRED TO FILL UNUSABLE PAVEMENT EXC THAT IS NOT WITHIN CUT
4 - EXPANDED FILL FACTOR	EXPANDED FILL FACTOR = 1.25 EXPANDED FILL = (UNEXPANDED FILL) * FILL FACTOR

STH 32/57 NB NORTH

STATION	DISTANCE FT	AREA (SF) CUT	AREA (SF) SALVAGED/UNUSABLE PAVEMENT MATERIAL (WITHIN CUT)	AREA (SF) SALVAGED/UNUSABLE PAVEMENT MATERIAL (NOT WITHIN CUT)	AREA (SF) FILL	AREA (SF) EBS	INCREMENTAL VOL (UNADJUSTED CY) CUT	INCREMENTAL VOL (UNADJUSTED CY) SALVAGED/UNUSABLE PAVEMENT MATERIAL (WITHIN CUT)	INCREMENTAL VOL (UNADJUSTED CY) SALVAGED/UNUSABLE PAVEMENT MATERIAL (NOT WITHIN CUT)	INCREMENTAL VOL (UNADJUSTED CY) FILL	INCREMENTAL VOL (UNADJUSTED CY) EBS NOTE 1	CUMULATIVE VOLUME (CY) Available CUT 1.00	CUMULATIVE VOLUME (CY) EXPANDED FILL 1.25	CUMULATIVE VOLUME (CY) EXPANDED EBS BACKFILL 1.25	MASS ORDINATE NOTE 2
159+00	0	50	21	0	184	0	0	0	0	0	0	0	0	0	0
159+25	25	88	18	0	174	0	64	18	0	166	0	46	207	0	-161
159+50	25	109	14	0	196	0	91	15	0	171	0	122	421	0	-299
160+00	50	85	10	0	159	0	180	22	0	329	0	280	832	0	-553
160+50	50	63	10	0	187	0	137	19	0	320	0	398	1,233	0	-834
161+00	50	63	10	0	208	0	117	19	0	366	0	496	1,690	0	-1,194
161+50	50	164	10	0	80	0	210	19	0	267	0	688	2,023	0	-1,335
162+00	50	183	10	0	69	0	321	19	0	138	0	991	2,196	0	-1,205
162+50	50	177	10	0	72	0	333	19	0	131	0	1,306	2,359	0	-1,053
162+91	41	196	10	0	68	0	283	15	0	106	0	1,574	2,492	0	-918
163+00	9	201	10	0	58	0	66	3	0	21	0	1,636	2,518	0	-882
163+50	50	229	10	0	38	0	398	19	0	89	0	2,016	2,629	0	-613
164+00	50	231	10	0	42	0	426	19	0	74	0	2,423	2,722	0	-298
164+40	40	304	10	0	0	0	396	15	0	31	0	2,805	2,761	0	44
164+50	10	288	10	0	6	0	110	4	0	1	0	2,911	2,762	0	149
164+85	35	233	10	0	33	0	338	13	0	25	0	3,236	2,793	0	442
165+00	15	201	10	0	18	0	121	6	0	14	0	3,351	2,811	0	539
165+50	50	230	10	0	0	0	399	19	0	17	0	3,731	2,832	0	899
166+00	50	320	10	0	0	0	509	19	0	0	0	4,222	2,832	0	1,390
166+50	50	371	10	0	0	0	640	19	0	0	0	4,843	2,832	0	2,011
167+00	50	430	13	0	3	0	742	21	0	3	0	5,564	2,836	0	2,728
167+50	50	305	26	0	0	0	681	36	0	3	0	6,208	2,839	0	3,369
168+00	50	208	18	0	2	0	475	41	0	2	0	6,642	2,841	0	3,801
168+50	50	228	13	0	0	0	404	29	0	2	0	7,017	2,844	0	4,174
169+00	50	217	10	0	0	0	412	21	0	0	0	7,408	2,844	0	4,564
169+50	50	207	10	0	0	0	393	19	0	0	0	7,782	2,844	0	4,938
170+00	50	169	10	0	0	0	348	19	0	0	0	8,112	2,844	0	5,268
						TOTALS	8,593	481	0	2,275	0				

NOTES	
1 - CUT	CUT INCLUDES SALVAGED/UNUSABLE PAVMENT MATERIAL WITHIN NEW PAVEMENT SECTION AND EBS.
2- SALVAGED/UNUSABLE PAVEMENT MATERIAL	SALVAGED/UNUSABLE PAVEMENT MATERIAL WITHIN CUT IS ABOVE SUBGRDE SALVAGED/UNUSABLE PAVEMENT MATERIAL NOT WITHN CUT IS BELOW SUBGRADE
3 - FILL	INCLUDES VOLUME REQUIRED TO FILL UNUSABLE PAVEMENT EXC THAT IS NOT WITHIN CUT
4 - EXPANDED FILL FACTOR	EXPANDED FILL FACTOR = 1.25 EXPANDED FILL = (UNEXPANDED FILL) * FILL FACTOR

ROUNDABOUT

STATION	DISTANCE FT	AREA (SF) CUT	SALVAGED/UNUSABLE PAVEMENT MATERIAL (WITHIN CUT)	SALVAGED/UNUSABLE PAVEMENT MATERIAL (NOT WITHIN CUT)	FILL	EBS	INCREMENTAL VOL (UNADJUSTED CY) CUT	SALVAGED/UNUSABLE PAVEMENT MATERIAL (WITHIN CUT)	SALVAGED/UNUSABLE PAVEMENT MATERIAL (NOT WITHIN CUT)	FILL	EBS NOTE 1	CUMULATIVE VOLUME (CY) Available CUT 1.00	EXPANDED FILL 1.25	EXPANDED EBS BACKFILL 1.25	MASS ORDINATE NOTE 2
10+30	0	99.0	31	0	204.0	0.0	0	0	0	0	0	0	0	0	0
10+77	47	83.0	59	0	201.0	0.0	158	78	0	353	0	80	441	0	-361
11+11	34	140.0	24	0	204.0	0.0	140	52	0	255	0	168	759	0	-591
11+53	42	61.0	57	0	219.0	0.0	156	63	0	329	0	262	1,171	0	-909
11+93	40	45.0	35	0	222.0	0.0	79	68	0	327	0	272	1,579	0	-1,307
12+35	42	38.0	49	0	269.0	0.0	59	38	0	209	0	293	1,840	0	-1,548
12+76	41	35.0	30	0	253.0	0.0	55	60	0	396	0	288	2,336	0	-2,048
13+18	42	68.0	47	0	229.0	0.0	80	60	0	375	0	309	2,805	0	-2,496
						TOTALS	728	420	0	2,244	0				

CEMETERY ROAD

STATION	DISTANCE FT	AREA (SF) CUT	SALVAGED/UNUSABLE PAVEMENT MATERIAL (WITHIN CUT)	SALVAGED/UNUSABLE PAVEMENT MATERIAL (NOT WITHIN CUT)	FILL	EBS	INCREMENTAL VOL (UNADJUSTED CY) CUT	SALVAGED/UNUSABLE PAVEMENT MATERIAL (WITHIN CUT)	SALVAGED/UNUSABLE PAVEMENT MATERIAL (NOT WITHIN CUT)	FILL	EBS NOTE 1	CUMULATIVE VOLUME (CY) Available CUT 1.00	EXPANDED FILL 1.25	EXPANDED EBS BACKFILL 1.25	MASS ORDINATE NOTE 2
10+50	0	41.0	17	0	4.0	0.0	0	0	0	0	0	0	0	0	0
11+00	50	93.0	13	0	0.0	0.0	124	28	0	4	0	96	5	0	92
11+25	25	42.0	12	0	2.0	0.0	63	12	0	1	0	147	6	0	141
11+35	10	41.0	10	0	20.0	0.0	15	4	0	4	0	159	11	0	148
11+50	15	28.0	9	0	33.0	0.0	19	5	0	15	0	172	29	0	143
11+75	25	43.0	8	0	51.0	0.0	33	8	0	24	0	197	59	0	139
12+00	25	41.0	7	0	1.0	0.0	39	7	0	24	0	229	89	0	140
12+25	0	47.0	7	0	0.0	0.0	0	0	0	0	0	229	89	0	140
						TOTALS	293	64	0	71	0				

PEACH TREE LANE

STATION	DISTANCE FT	AREA (SF) CUT	SALVAGED/UNUSABLE PAVEMENT MATERIAL (WITHIN CUT)	SALVAGED/UNUSABLE PAVEMENT MATERIAL (NOT WITHIN CUT)	FILL	EBS	INCREMENTAL VOL (UNADJUSTED CY) CUT	SALVAGED/UNUSABLE PAVEMENT MATERIAL (WITHIN CUT)	SALVAGED/UNUSABLE PAVEMENT MATERIAL (NOT WITHIN CUT)	FILL	EBS NOTE 1	CUMULATIVE VOLUME (CY) Available CUT 1.00	EXPANDED FILL 1.25	EXPANDED EBS BACKFILL 1.25	MASS ORDINATE NOTE 2
2+85	0	15.0	5	0	0.0	0.0	0	0	0	0	0	0	0	0	0
3+00	15	18.0	5	0	0.0	0.0	9	3	0	0	0	7	0	0	7
3+25	25	49.0	5	0	0.0	0.0	31	5	0	0	0	33	0	0	33
3+50	25	53.0	5	0	0.0	0.0	47	5	0	0	0	76	0	0	76
4+00	50	44.0	5	0	0.0	0.0	90	9	0	0	0	156	0	0	156
4+50	50	41.0	5	0	0.0	0.0	79	9	0	0	0	226	0	0	226
5+00	50	50.0	5	0	0.0	0.0	84	9	0	0	0	301	0	0	301
5+25	25	61.0	5	0	0.0	0.0	51	5	0	0	0	347	0	0	347
5+50	25	18.0	5	0	0.0	0.0	37	5	0	0	0	379	0	0	379
5+58	8	15.0	5	0	0.0	0.0	5	1	0	0	0	382	0	0	382
						TOTALS	433	51	0	0	0				

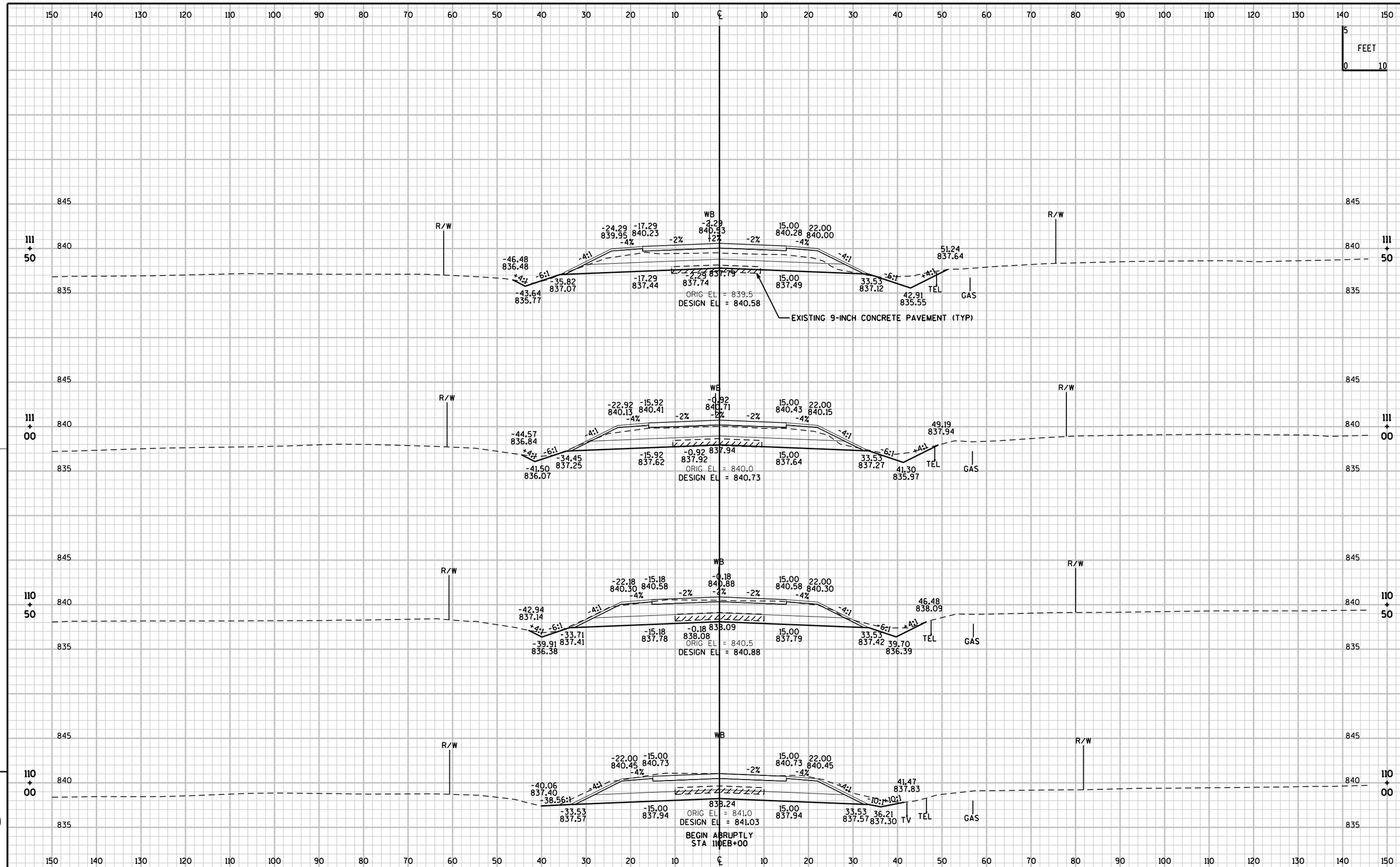

PROJECT NO:1500-32-71	HWY:USH 10	COUNTY:CALUMET	CROSS SECTIONS:USH 10 WEST	SHEET 203	E

FILE NAME : F:\TR\JOBS\E1865A08\Sheets\Plan\15003271_090201_xs.dgn PLOT DATE : 8/15/2011 8:30:43 AM PLOT BY : OMNNI- knuthc PLOT NAME : PLOT SCALE : 2.00 " / IN.

WISDOT/CADDS SHEET 21

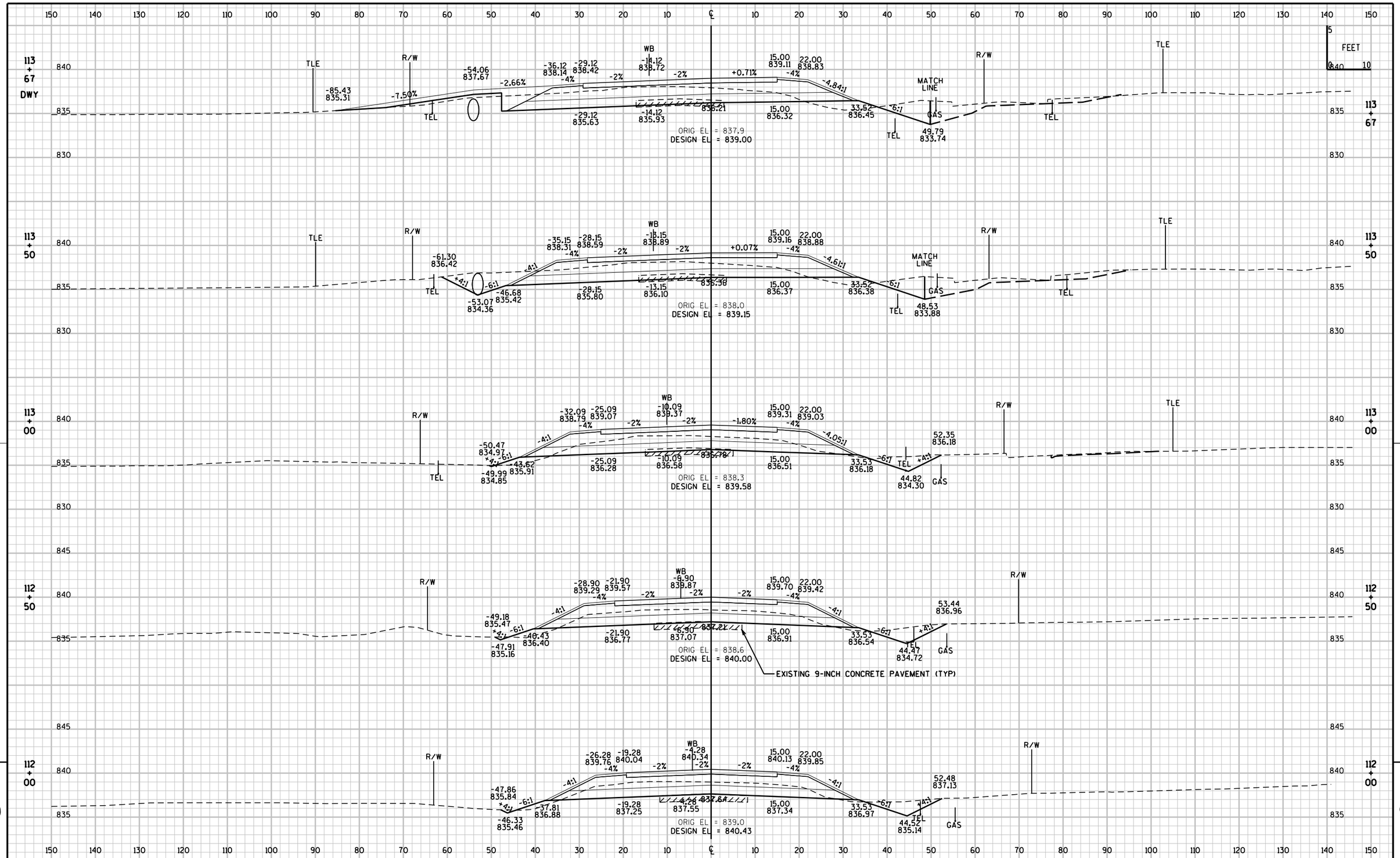

PROJECT NO: 1500-32-71	HWY: USH 10	COUNTY: CALUMET	CROSS SECTIONS: USH 10 WEST	SHEET 204	E

FILE NAME : F:\TR\JOBS\E1865A08\Sheets\Plan\15003271_090202_xs.dgn PLOT DATE : 8/15/2011 8:35:09 AM PLOT BY : OMNNI- knuthc PLOT NAME : PLOT SCALE : 2.00 " / IN.

WISDOT/CADDS SHEET 21

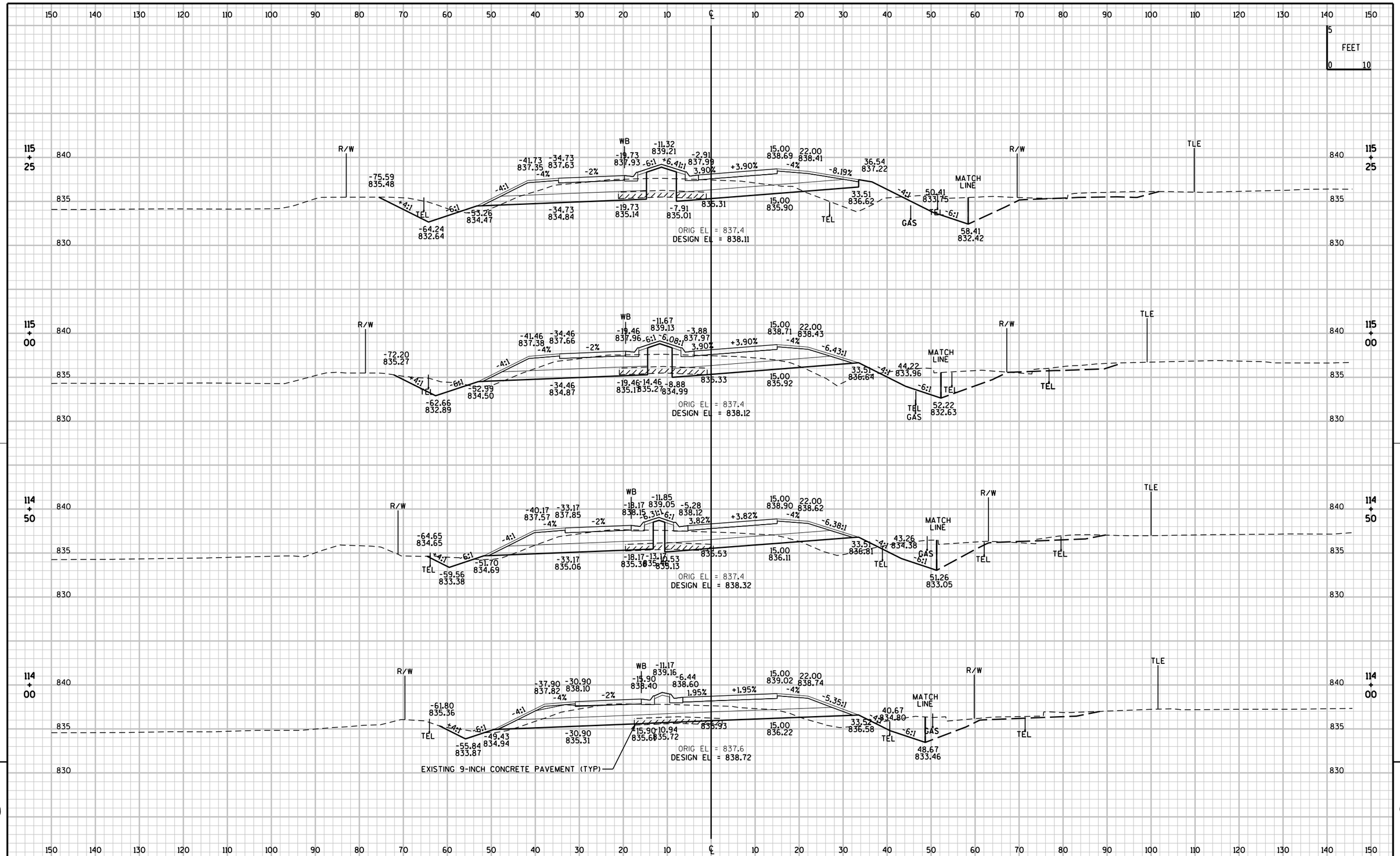

PROJECT NO:1500-32-71	HWY:USH 10	COUNTY:CALUMET	CROSS SECTIONS:USH 10 WEST	SHEET 205	E

FILE NAME : F:\TR\JOBS\E1865A08\Sheets\Plan\15003271_090203_xs.dgn PLOT DATE : 8/15/2011 8:48:48 AM PLOT BY : OMNNI- knuthc PLOT NAME : PLOT SCALE : 2.00 " / IN.

WISDOT/CADDS SHEET 21

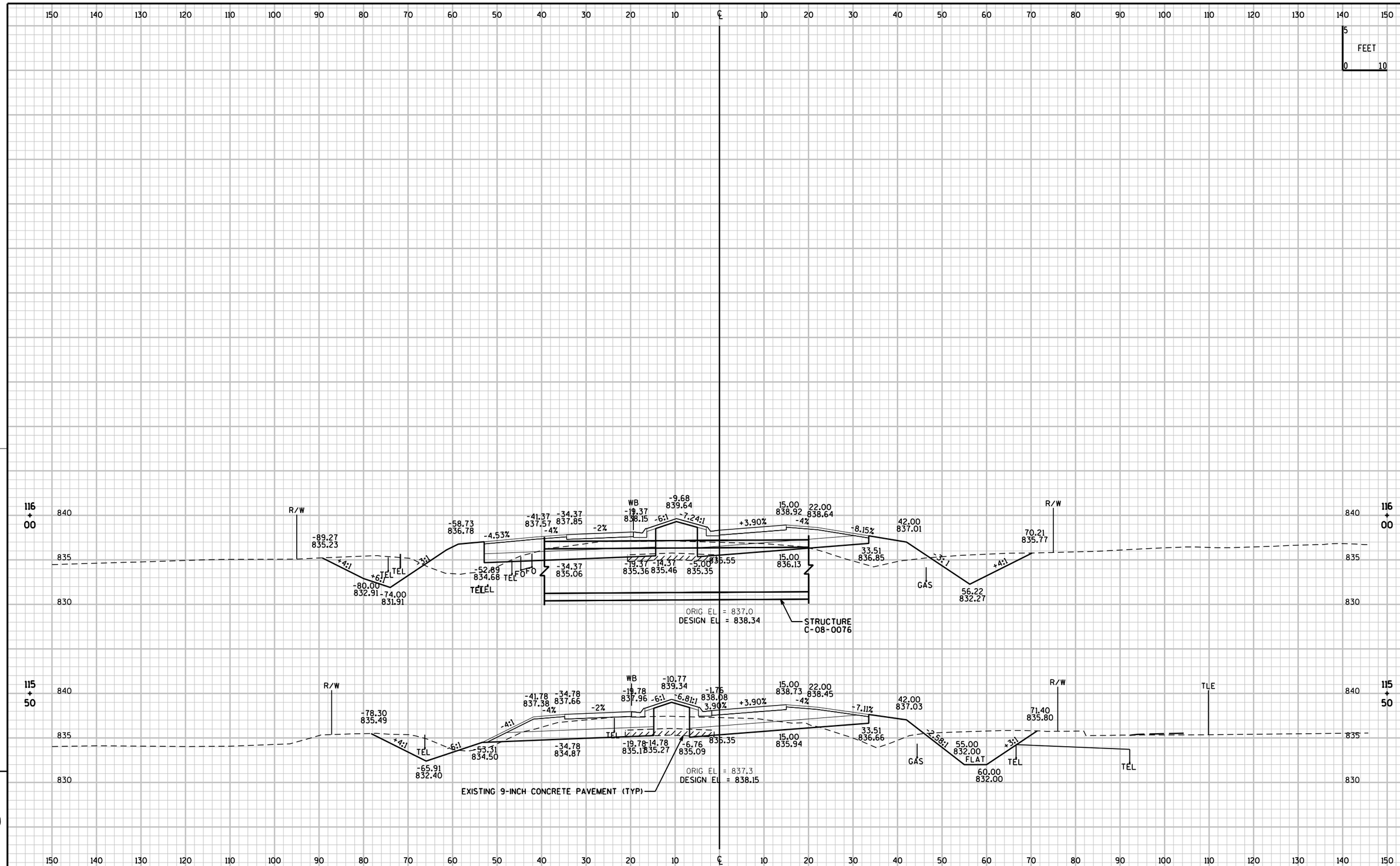

9

PROJECT NO:1500-32-71	HWY:USH 10	COUNTY:CALUMET	CROSS SECTIONS:USH 10 WEST	SHEET 206	E

FILE NAME : F:\TR\JOBS\E1865A08\Sheets\Plan\15003271_090204_xs.dgn PLOT DATE : 8/15/2011 8:51:26 AM PLOT BY : OMNNI- knuthc PLOT NAME : PLOT SCALE : 2.00 " / IN.

WISDOT/CADDS SHEET 21

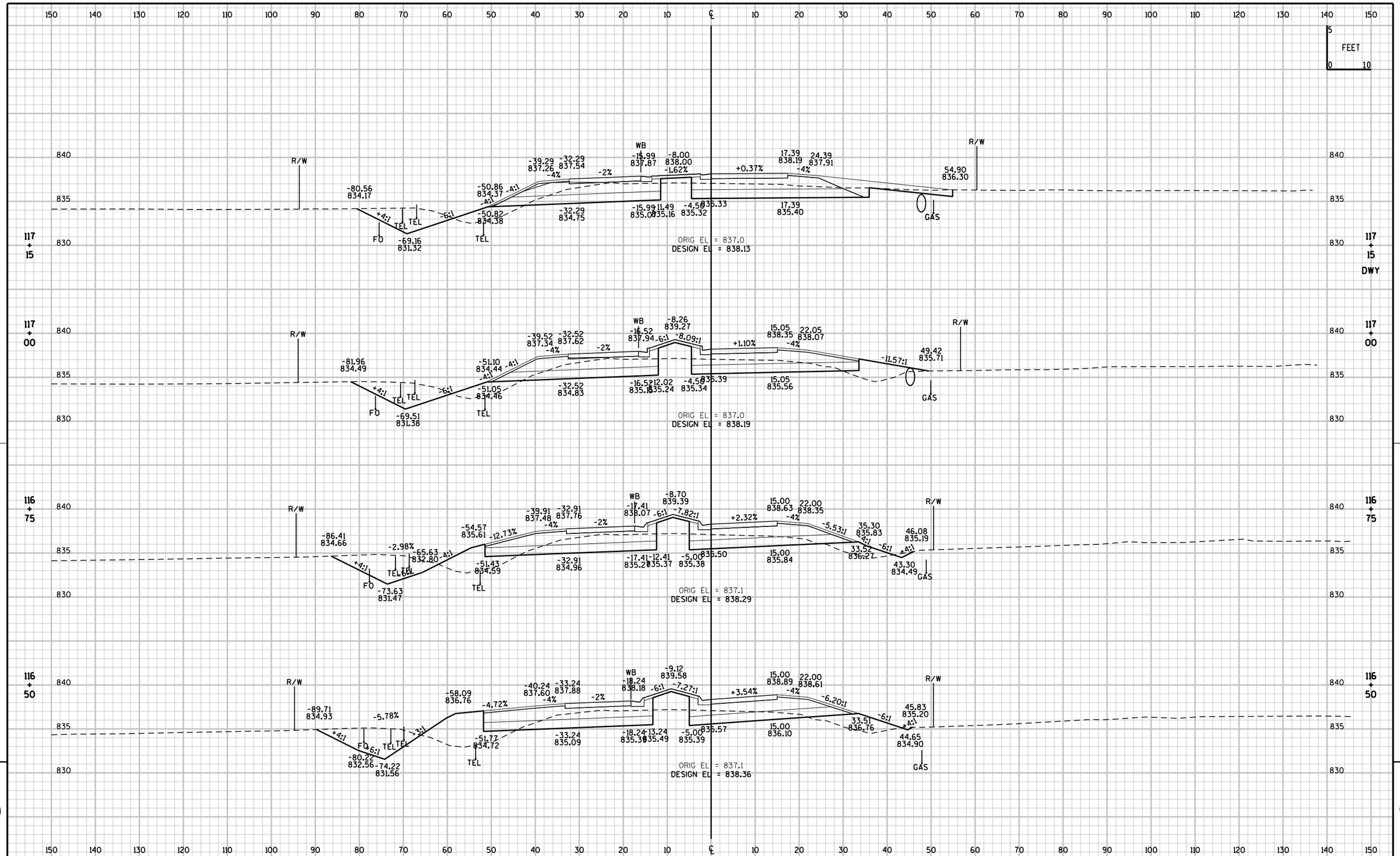

PROJECT NO: 1500-32-71	HWY: USH 10	COUNTY: CALUMET	CROSS SECTIONS: USH 10 WEST	SHEET 207	E

FILE NAME : F:\TR\JOBS\E1865A08\Sheets\Plan\15003271_090205_xs.dgn PLOT DATE : 6/10/2011 4:07:47 PM PLOT BY : OMNNI - knuthc PLOT NAME : PLOT SCALE : 2.00 " / IN.

WISDOT/CADDS SHEET 21

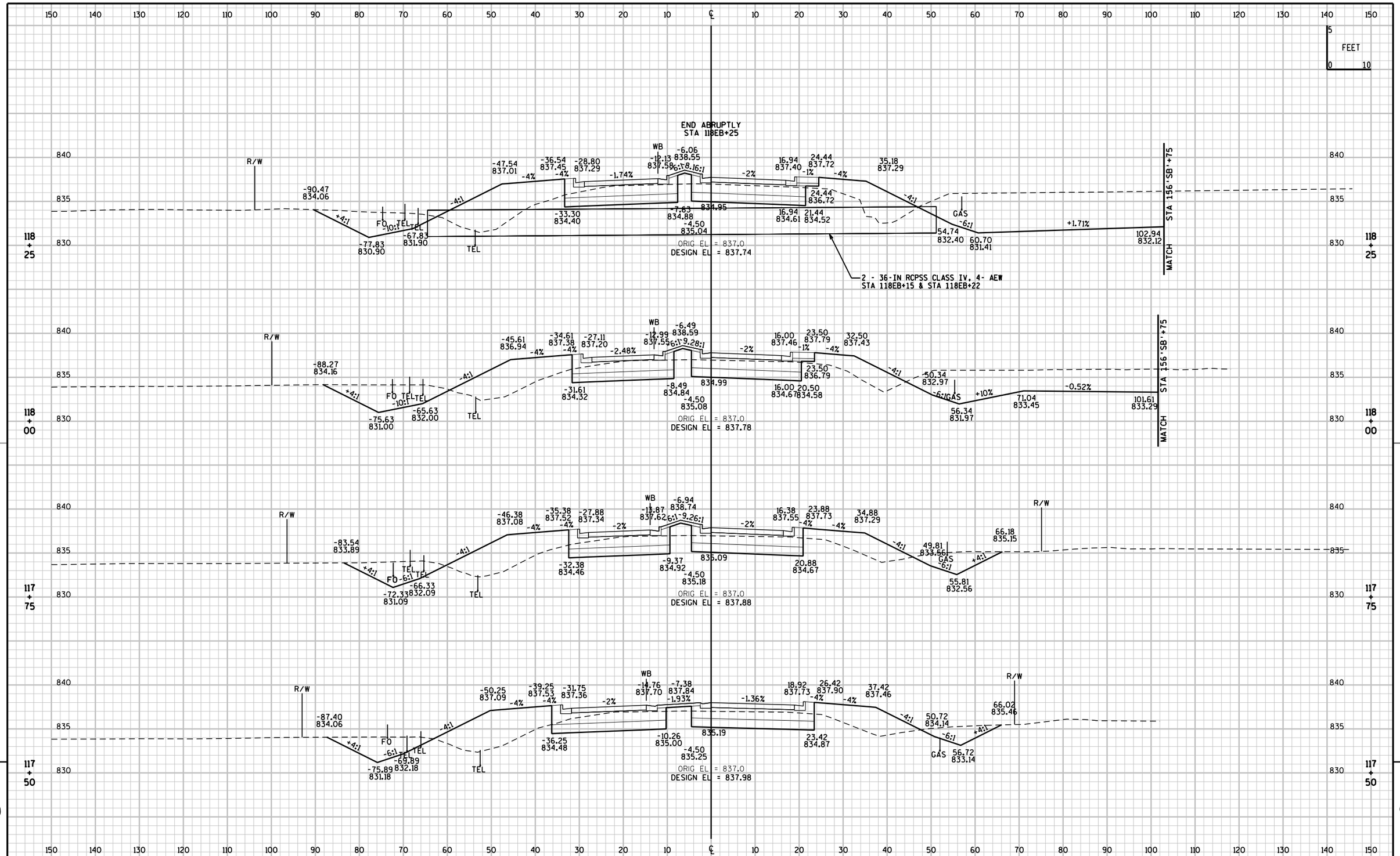

PROJECT NO:1500-32-71	HWY:USH 10	COUNTY:CALUMET	CROSS SECTIONS:USH 10 WEST	SHEET 208	E

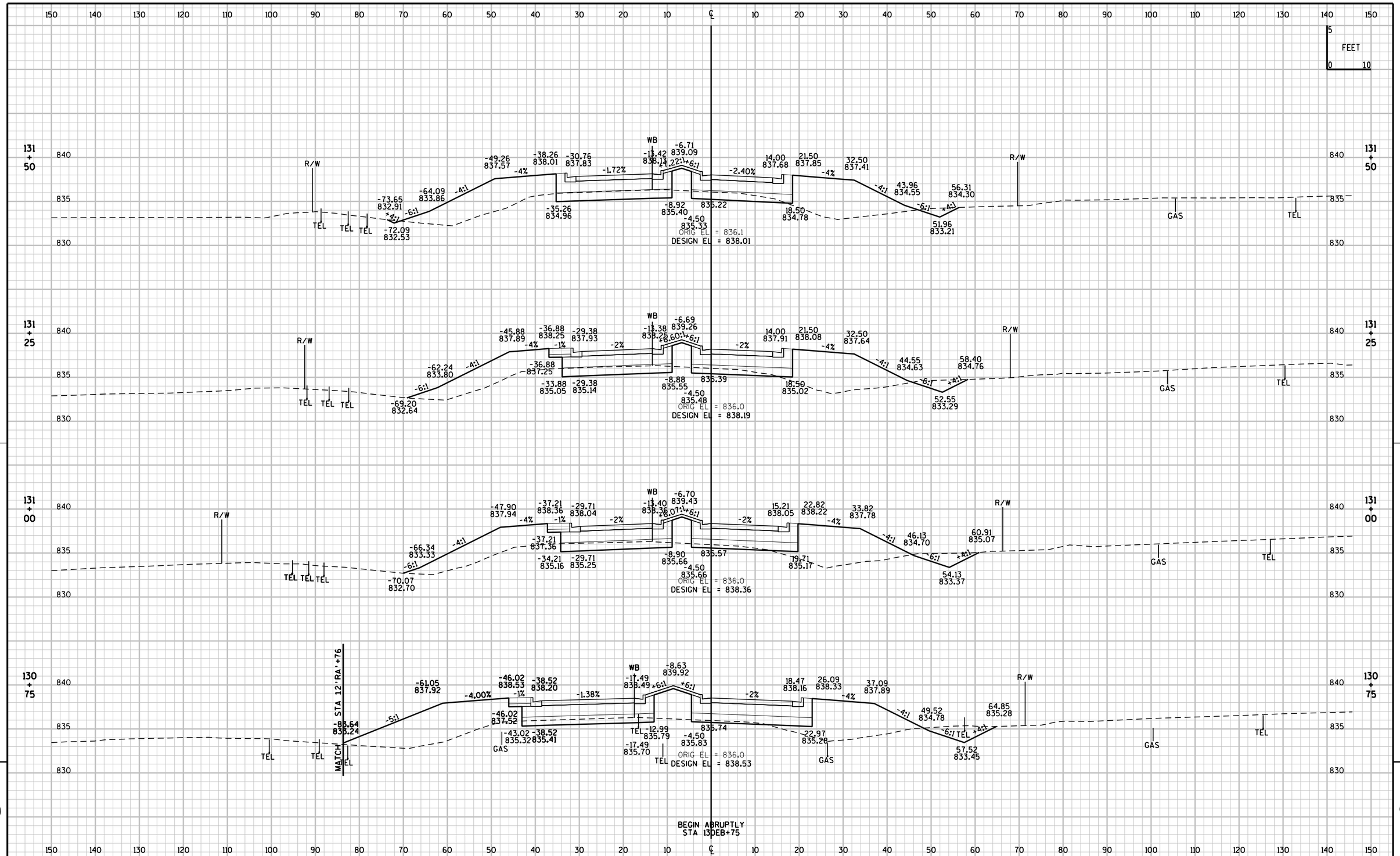

9

PROJECT NO:1500-32-71	HWY:USH 10	COUNTY:CALUMET	CROSS SECTIONS:USH 10 EAST	SHEET 209	E

FILE NAME : F:\TR\JOBS\E1865A08\Sheets\Plan\15003271_090211_xs.dgn PLOT DATE : 4/15/2013 10:27:43 AM PLOT BY : OMNNI- perryd PLOT NAME : PLOT SCALE : 2.00 " / IN.

WISDOT/CADDS SHEET 21

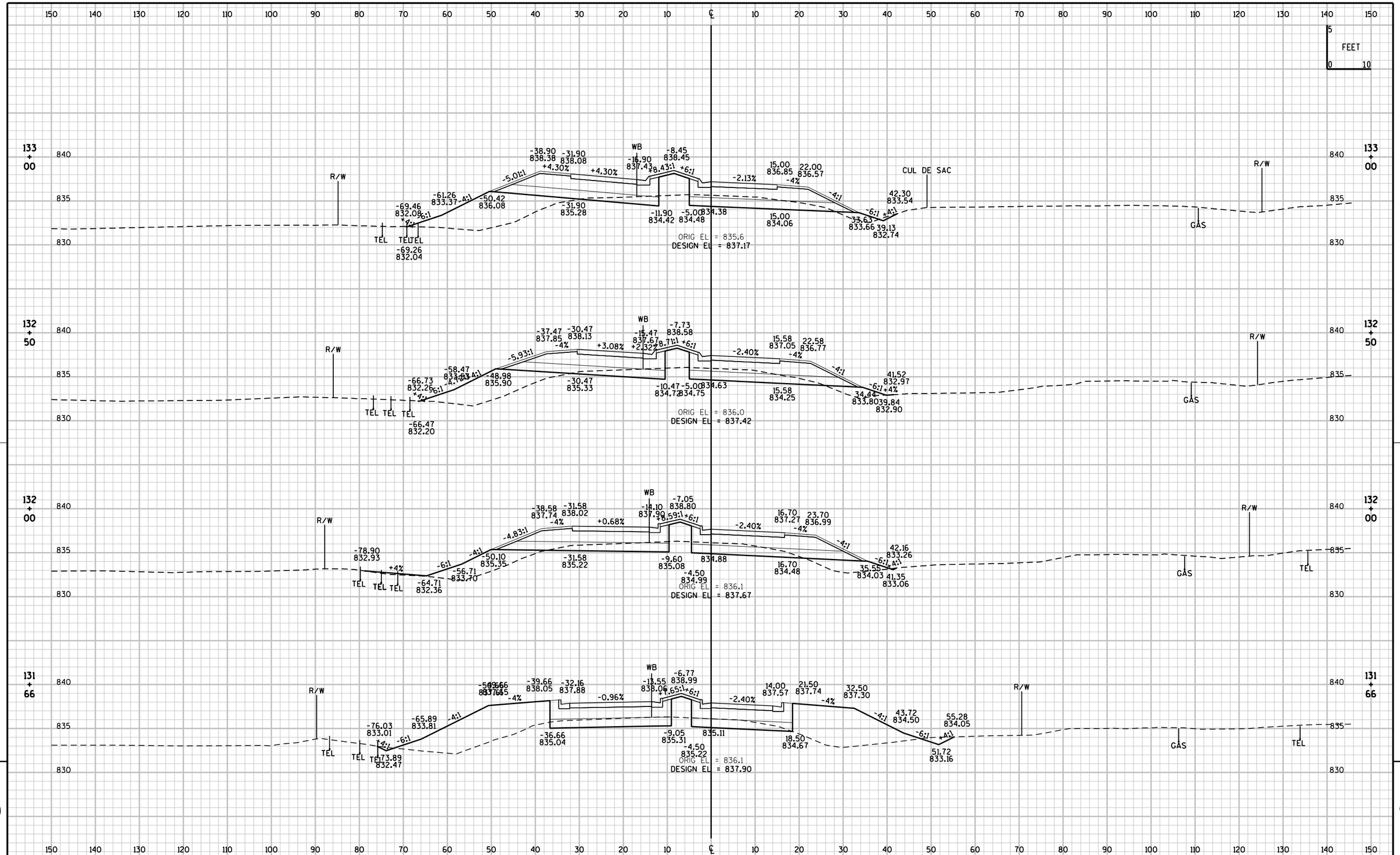

9

PROJECT NO:1500-32-71	HWY:USH 10	COUNTY:CALUMET	CROSS SECTIONS:USH 10 EAST	SHEET 210	E

FILE NAME : F:\TR\JOBS\E1865A08\Sheets\Plan\15003271_090212_xs.dgn PLOT DATE : 6/15/2011 11:41:51 AM PLOT BY : OMNNI- knuthc PLOT NAME : PLOT SCALE : 2.00 " / IN.

WISDOT/CADDS SHEET 21

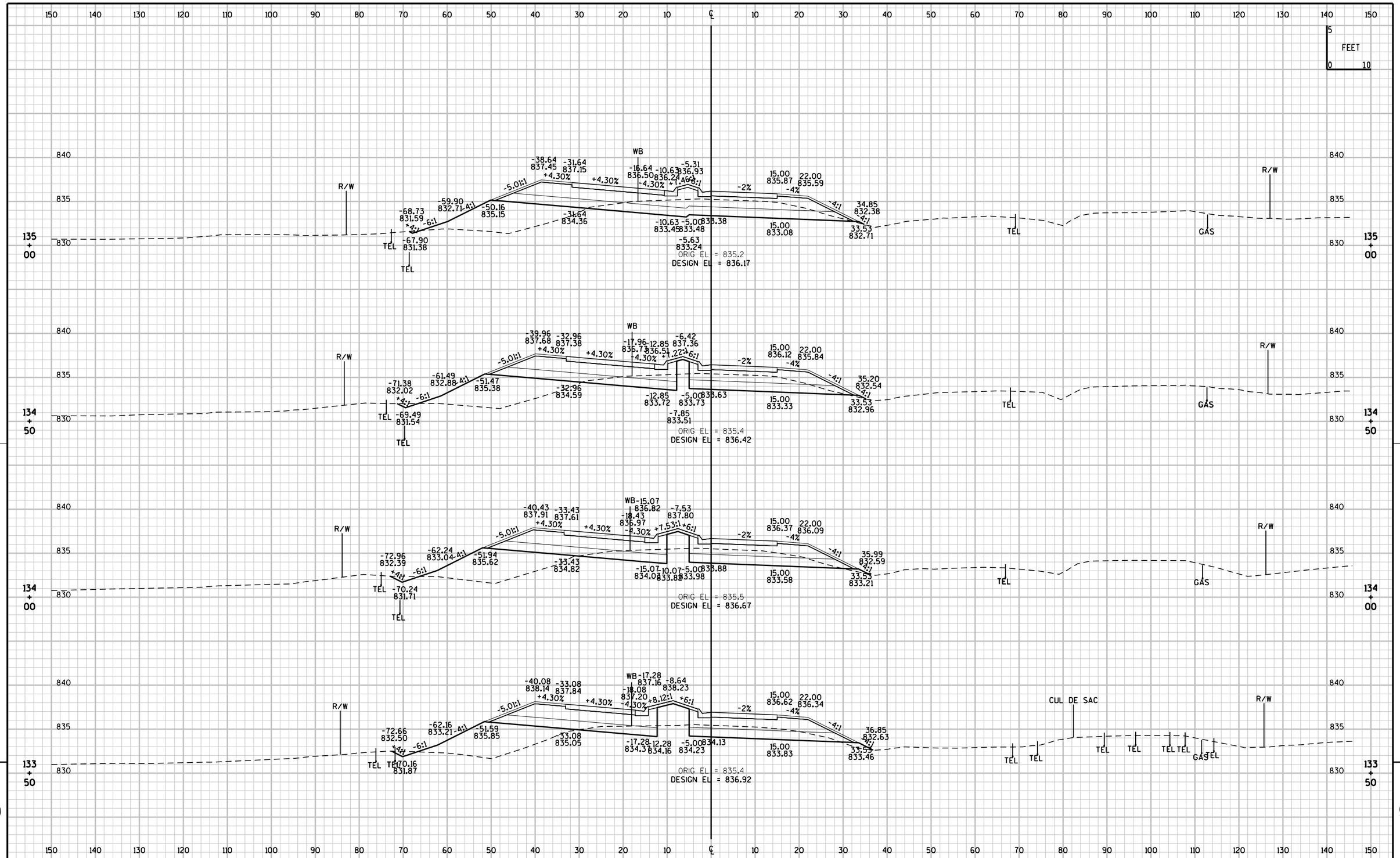

PROJECT NO:1500-32-71	HWY:USH 10	COUNTY:CALUMET	CROSS SECTIONS:USH 10 EAST	SHEET 211	E

FILE NAME : F:\TR\JOBS\E1865A08\Sheets\Plan\15003271_090213_xs.dgn PLOT DATE : 6/15/2011 11:46:50 AM PLOT BY : OMNNI- knuthc PLOT NAME : PLOT SCALE : 2.00 " / IN.

WISDOT/CADDS SHEET 21

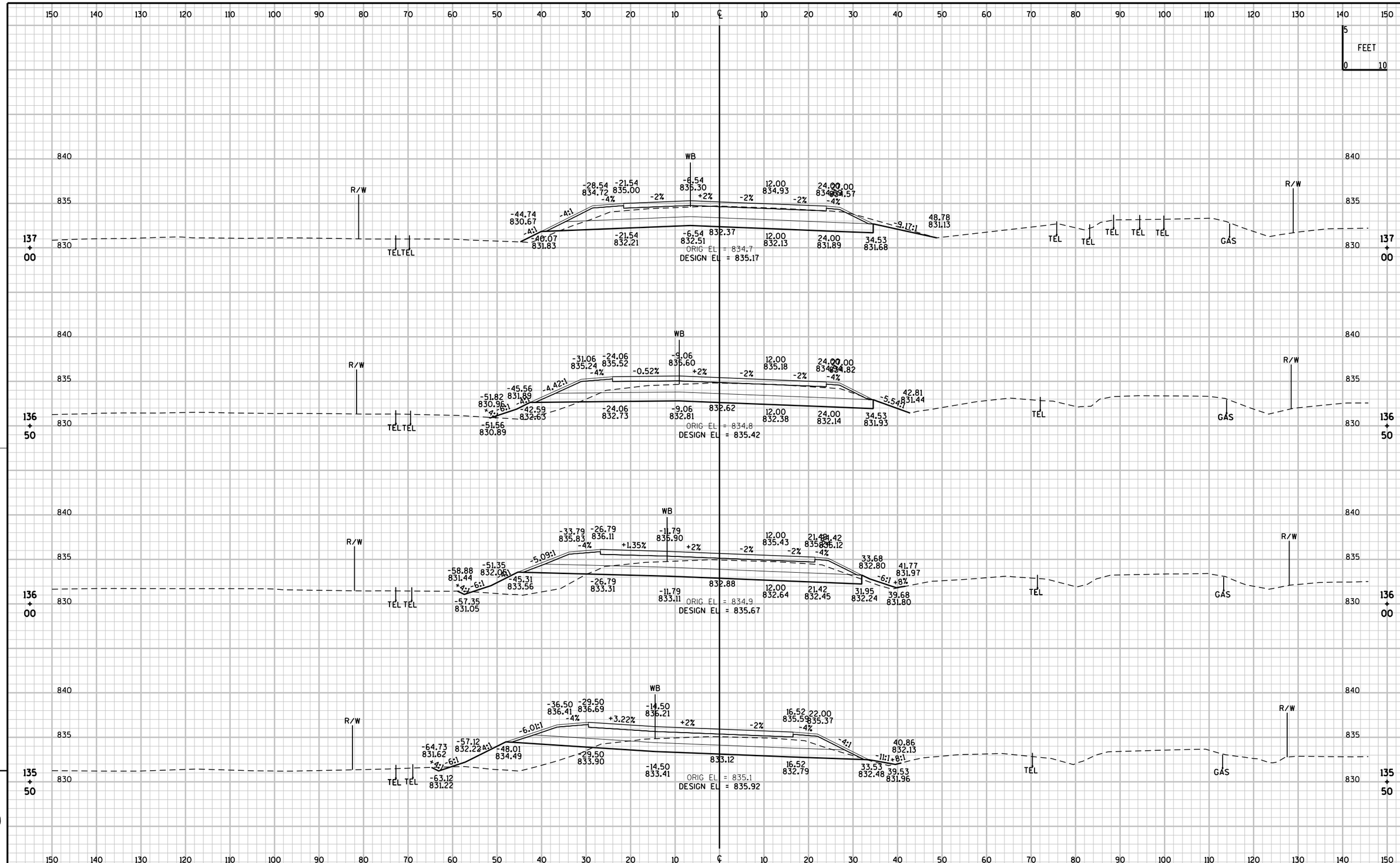

PROJECT NO:1500-32-71	HWY:USH 10	COUNTY:CALUMET	CROSS SECTIONS:USH 10 EAST	SHEET 212	E

FILE NAME : F:\TR\JOBS\E1865A08\Sheets\Plan\15003271_090214_xs.dgn PLOT DATE : 6/15/2011 11:50:18 AM PLOT BY : OMNNI- knuthc PLOT NAME : PLOT SCALE : 2.00 " / IN.

WISDOT/CADDS SHEET 21

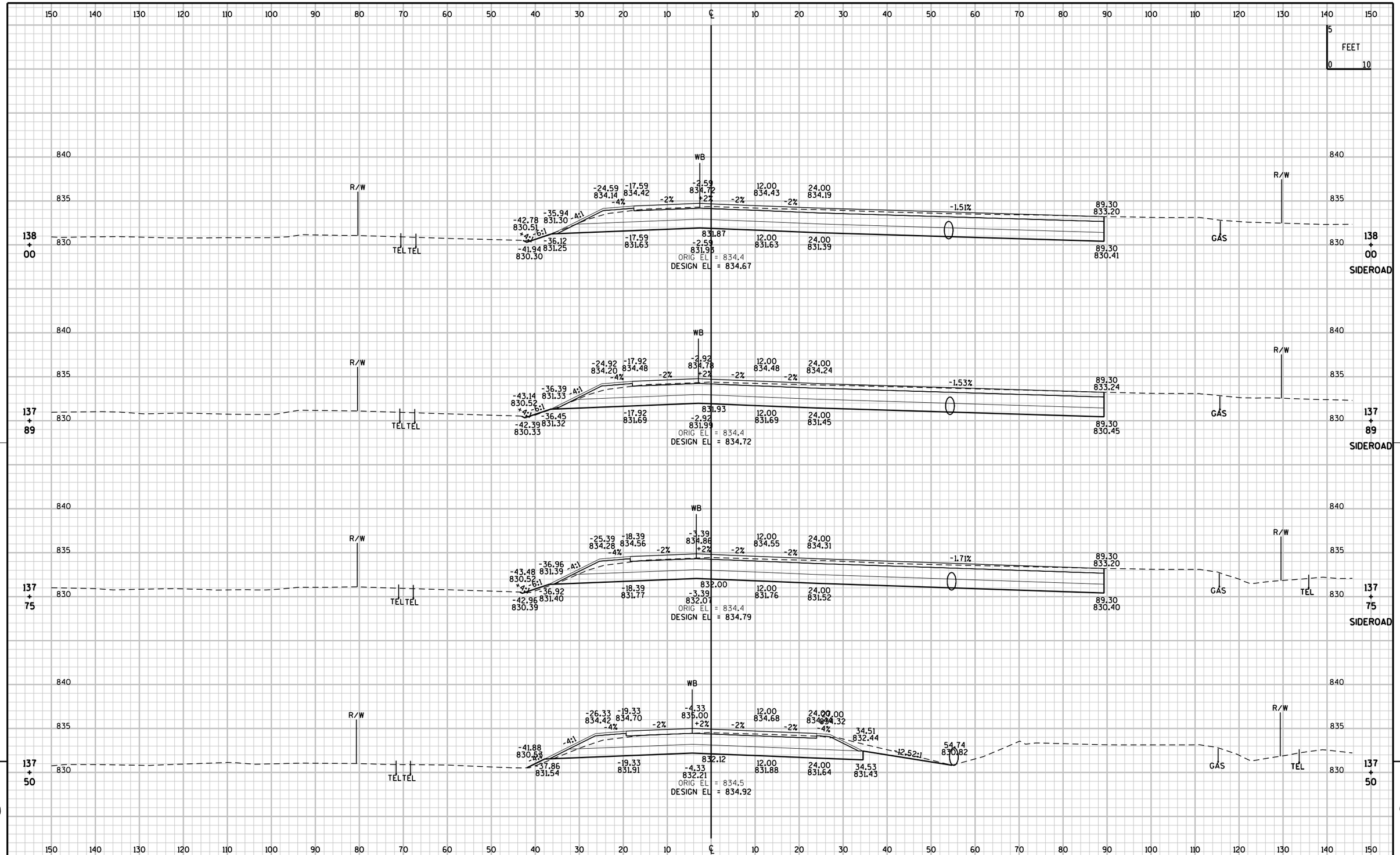

PROJECT NO:1500-32-71	HWY:USH 10	COUNTY:CALUMET	CROSS SECTIONS:USH 10 EAST	SHEET 213	E

FILE NAME : F:\TR\JOBS\E1865A08\Sheets\Plan\15003271_090215_xs.dgn PLOT DATE : 6/15/2011 1:27:20 PM PLOT BY : OMNNI- knuthc PLOT NAME : PLOT SCALE : 2.00 " / IN.

WISDOT/CADDS SHEET 21

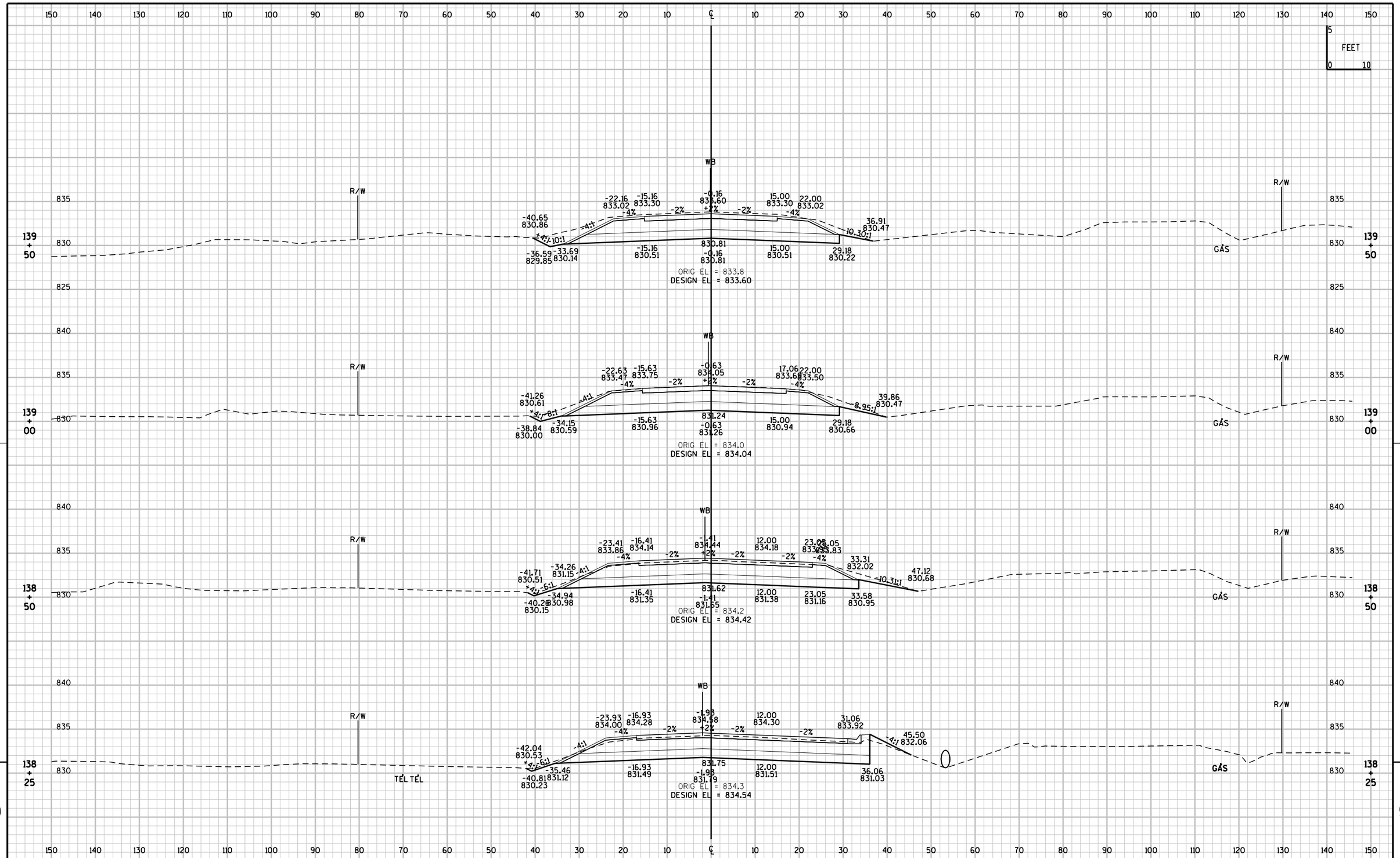

PROJECT NO:1500-32-71	HWY:USH 10	COUNTY:CALUMET	CROSS SECTIONS:USH 10 EAST	SHEET 214	E

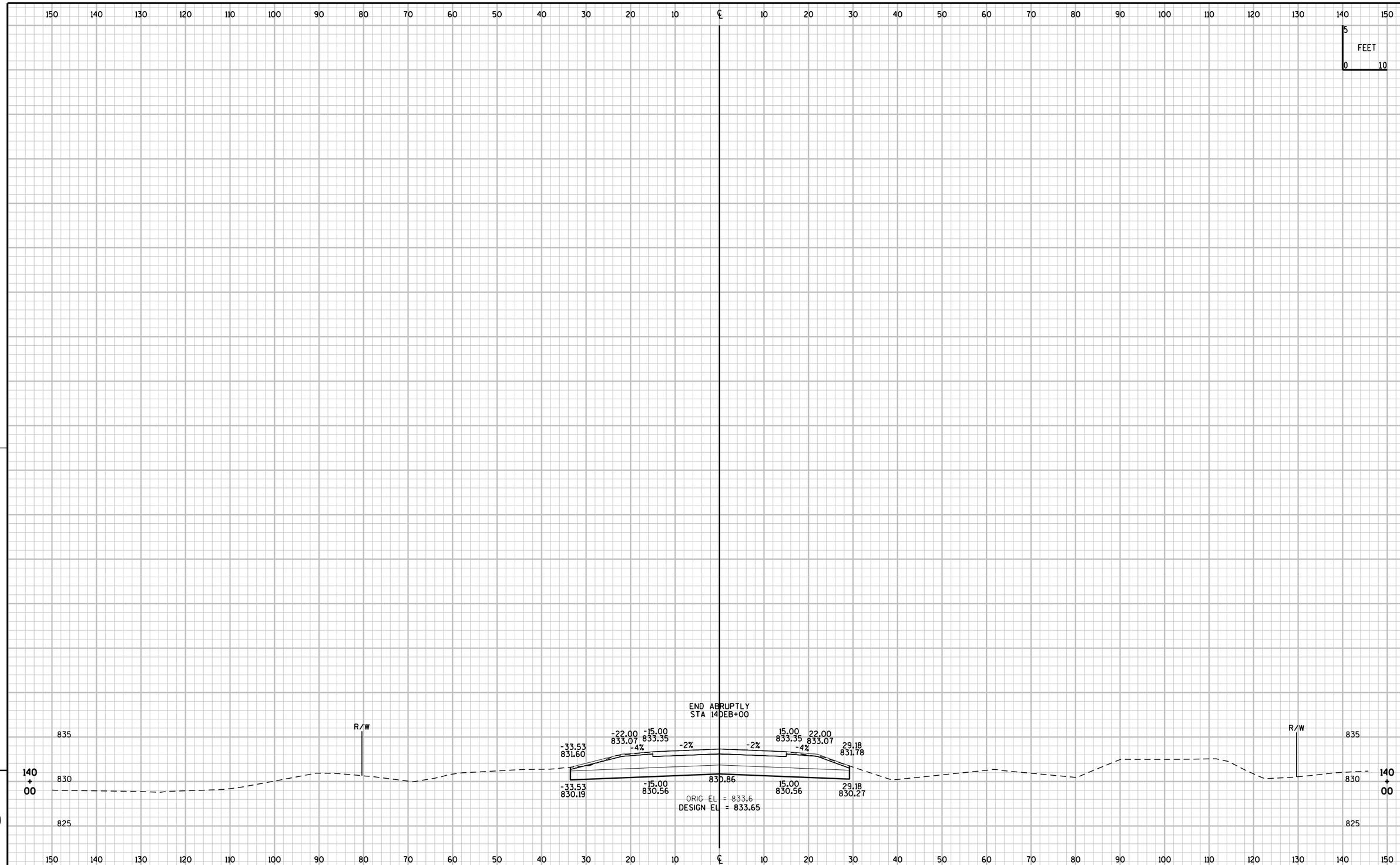

PROJECT NO:1500-32-71	HWY:USH 10	COUNTY:CALUMET	CROSS SECTIONS:USH 10 EAST	SHEET 215	E

FILE NAME : F:\TR\JOBS\E1865A08\Sheets\Plan\15003271_090217_xs.dgn PLOT DATE : 6/15/2011 1:34:46 PM PLOT BY : OMNNI- knuthc PLOT NAME : PLOT SCALE : 2.00 " / IN.

WISDOT/CADDS SHEET 21

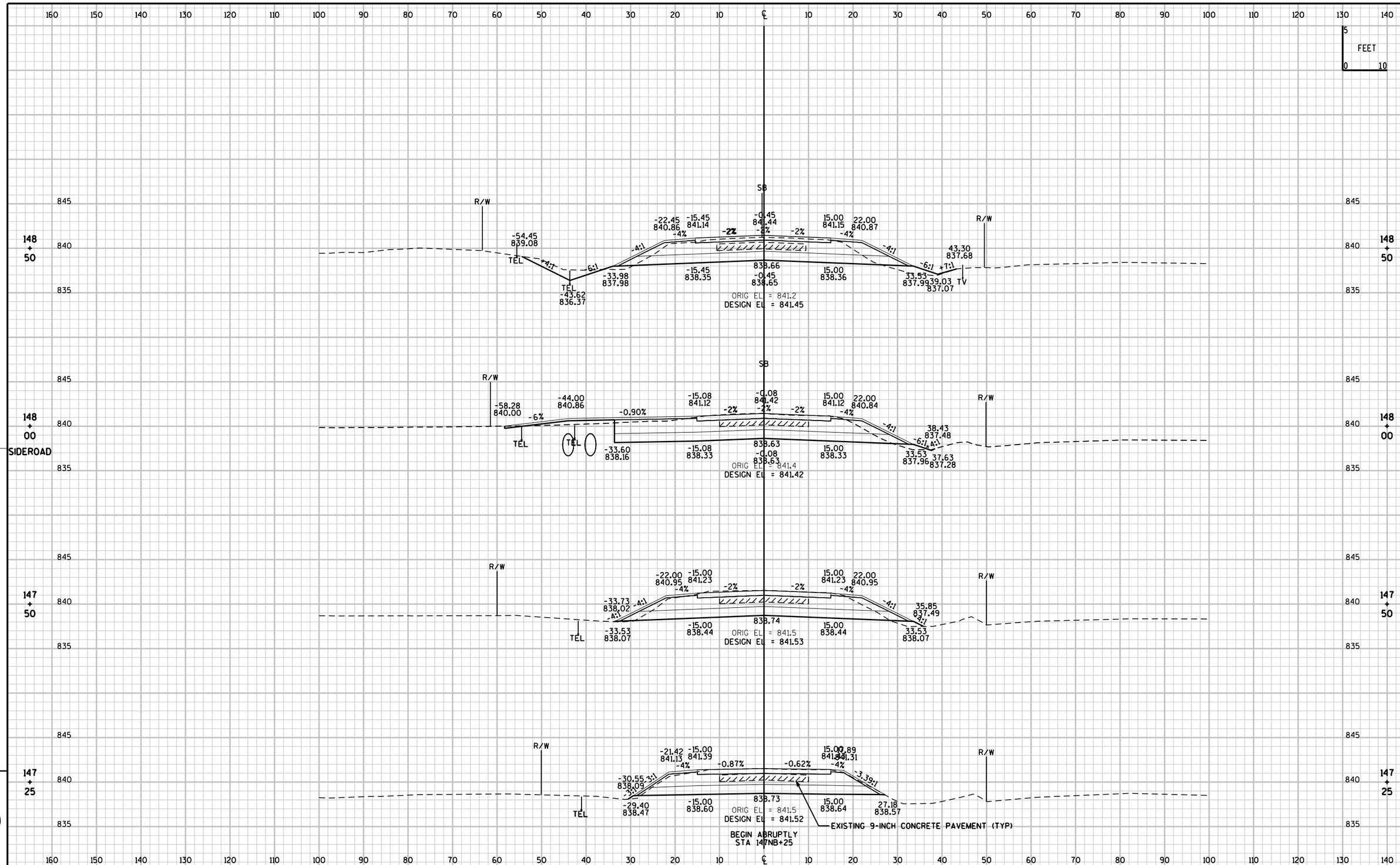

PROJECT NO:1500-32-71	HWY:USH 10	COUNTY:CALUMET	CROSS SECTIONS: STH 32/57 SOUTH	SHEET 216	E

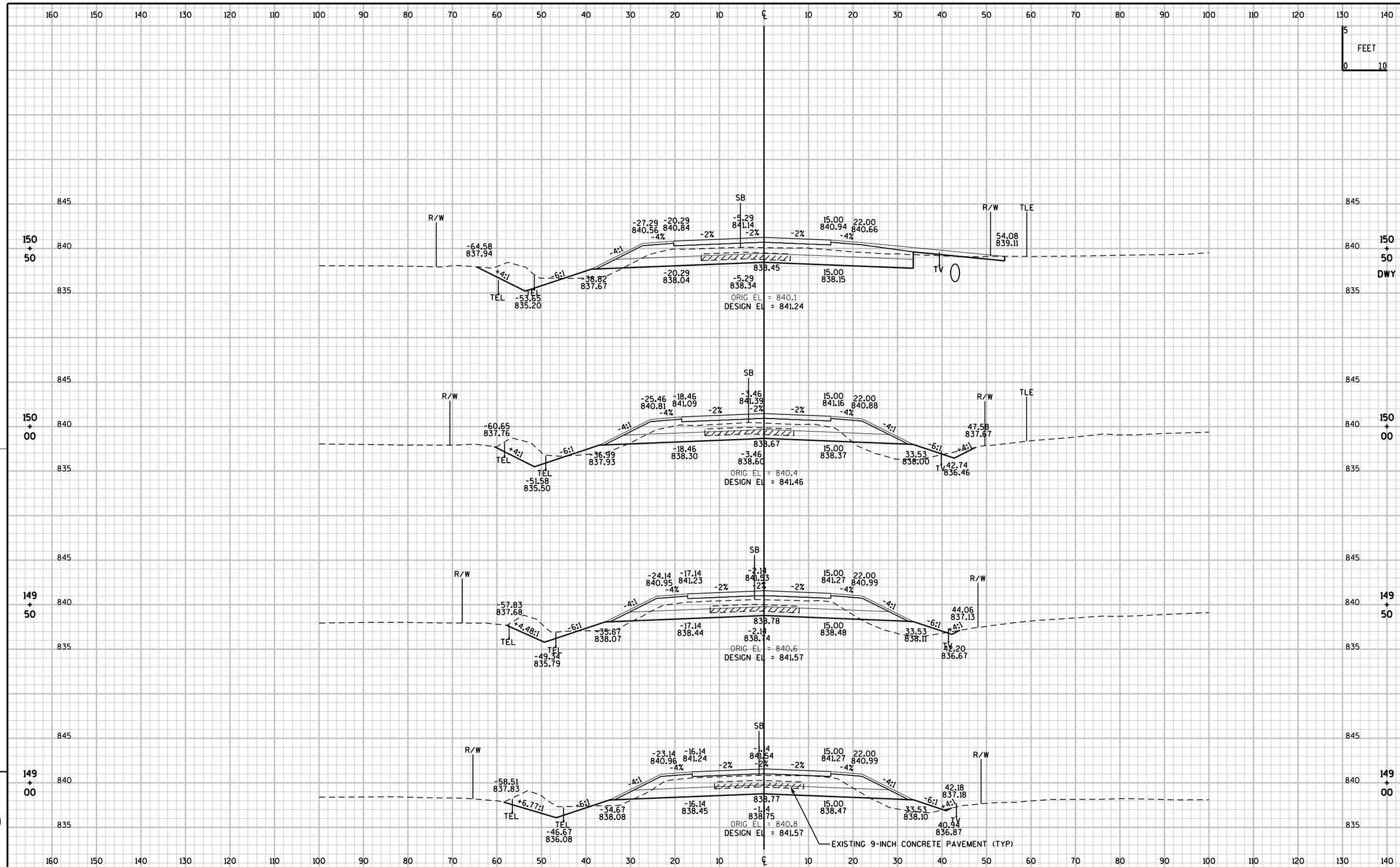

PROJECT NO:1500-32-71	HWY:USH 10	COUNTY:CALUMET	CROSS SECTIONS: STH 32/57 SOUTH	SHEET 217	E

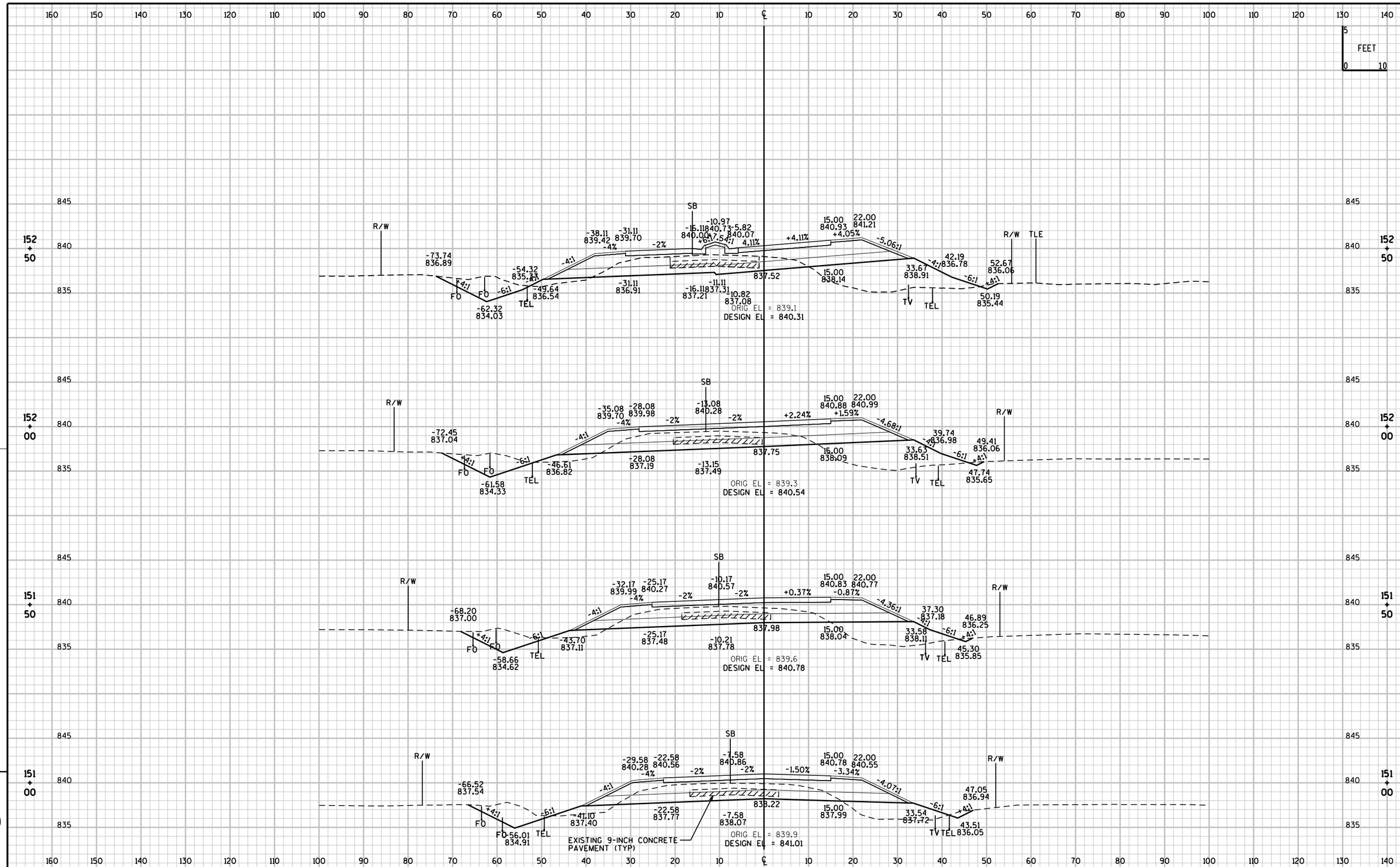

PROJECT NO:1500-32-71	HWY:USH 10	COUNTY:CALUMET	CROSS SECTIONS: STH 32/57 SOUTH	SHEET 218	E

FILE NAME : F:\TR\JOBS\E1865A08\Sheets\Plan\15003271_090223_xs.dgn PLOT DATE : 8/15/2011 9:23:35 AM PLOT BY : OMNNI- knuthc PLOT NAME : PLOT SCALE : 2.00 " / IN.

WISDOT/CADDS SHEET 21

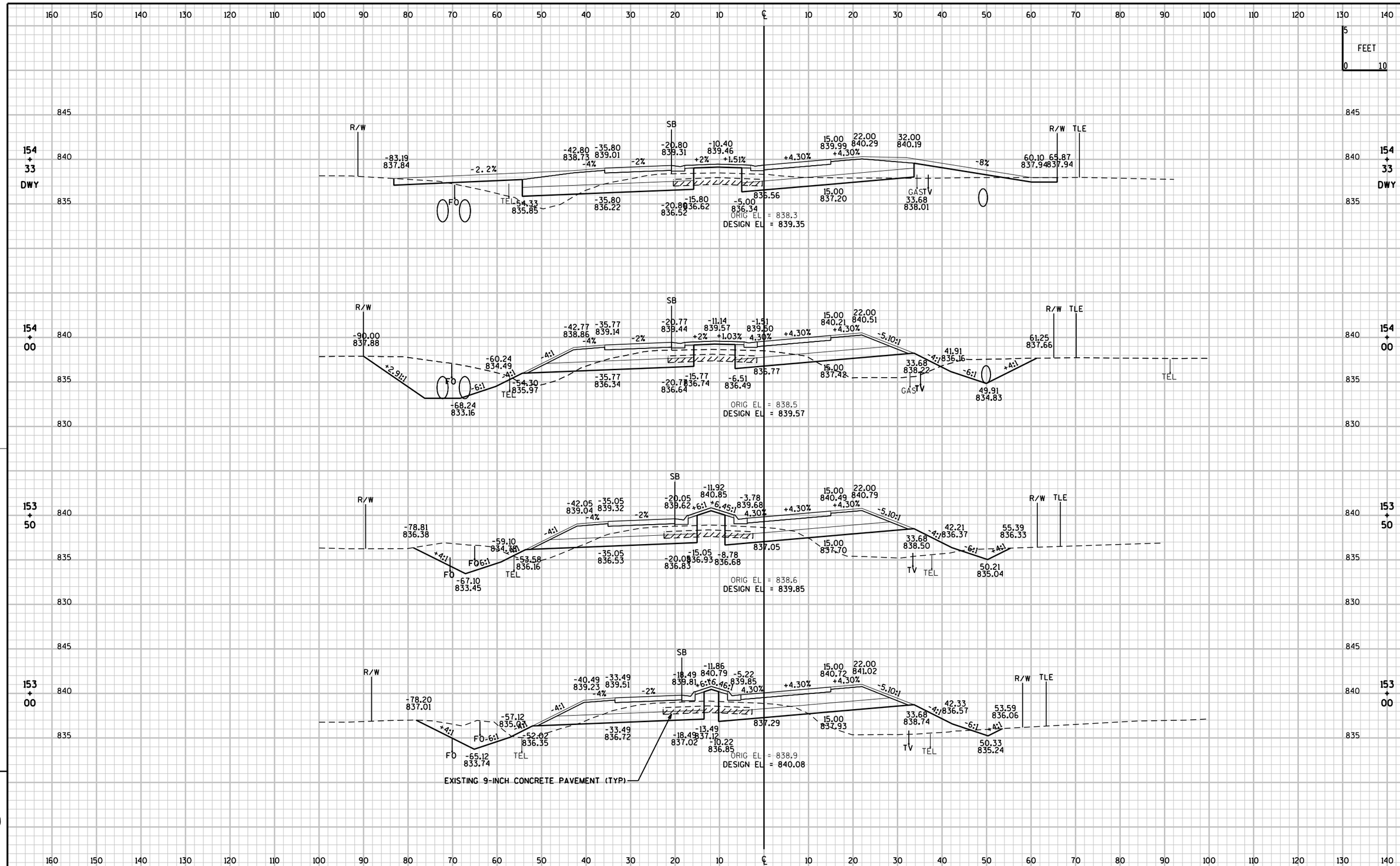

PROJECT NO:1500-32-71	HWY:USH 10	COUNTY:CALUMET	CROSS SECTIONS:STH 32/57 SOUTH	SHEET 219	E

FILE NAME : F:\TR\JOBS\E1865A08\Sheets\Plan\15003271_090224_xs.dgn PLOT DATE : 8/15/2011 9:25:30 AM PLOT BY : OMNNI- knuthc PLOT NAME : PLOT SCALE : 2.00 " / IN.

WISDOT/CADDS SHEET 21

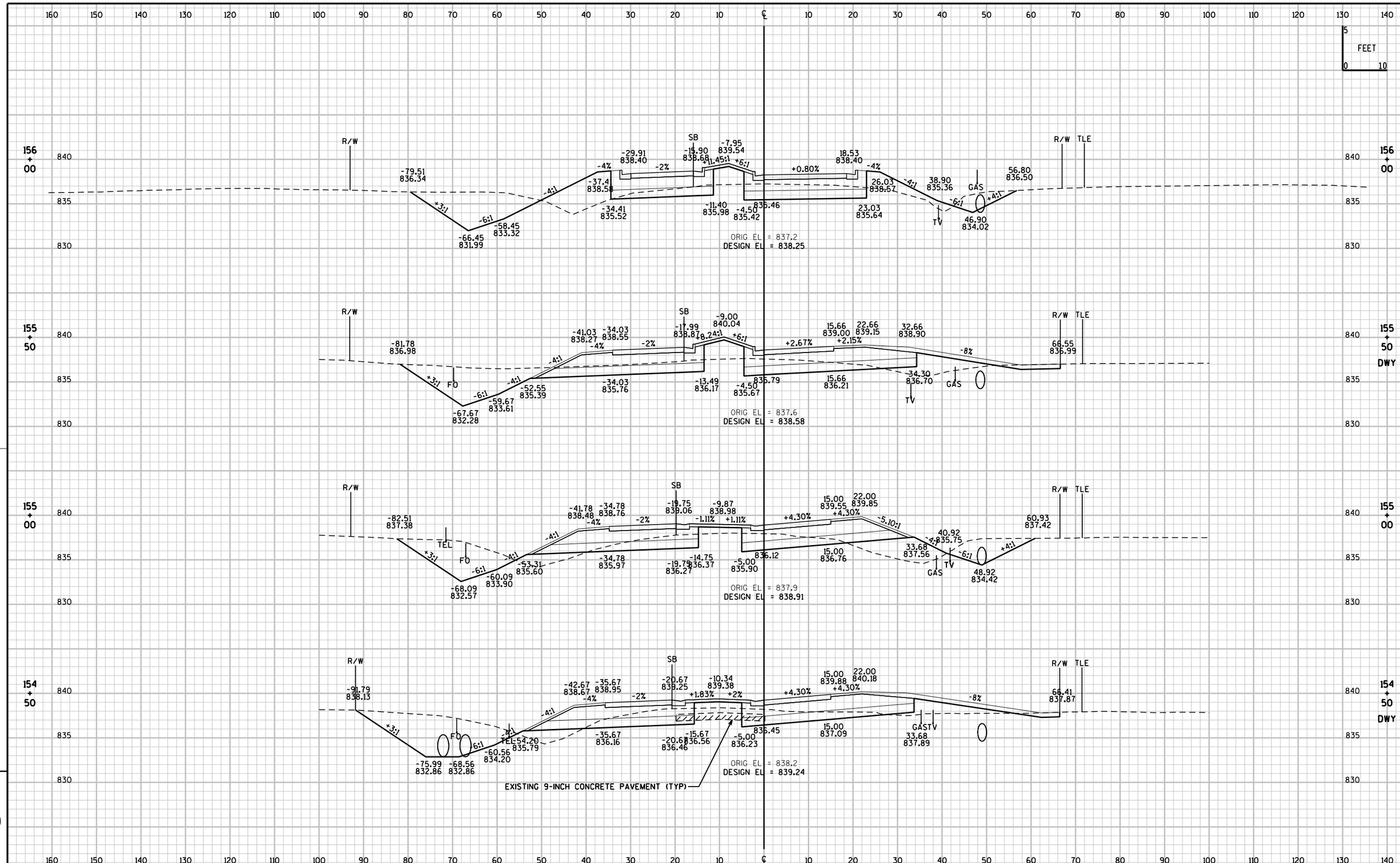

9

PROJECT NO:1500-32-71	HWY:USH 10	COUNTY:CALUMET	CROSS SECTIONS:STH 32/57 SOUTH	SHEET 220	E

FILE NAME : F:\TR\JOBS\E1865A08\Sheets\Plan\15003271_090225_xs.dgn PLOT DATE : 8/15/2011 9:38:27 AM PLOT BY : OMNNI- knuthc PLOT NAME : PLOT SCALE : 2.00 " / IN.

WISDOT/CADDS SHEET 21

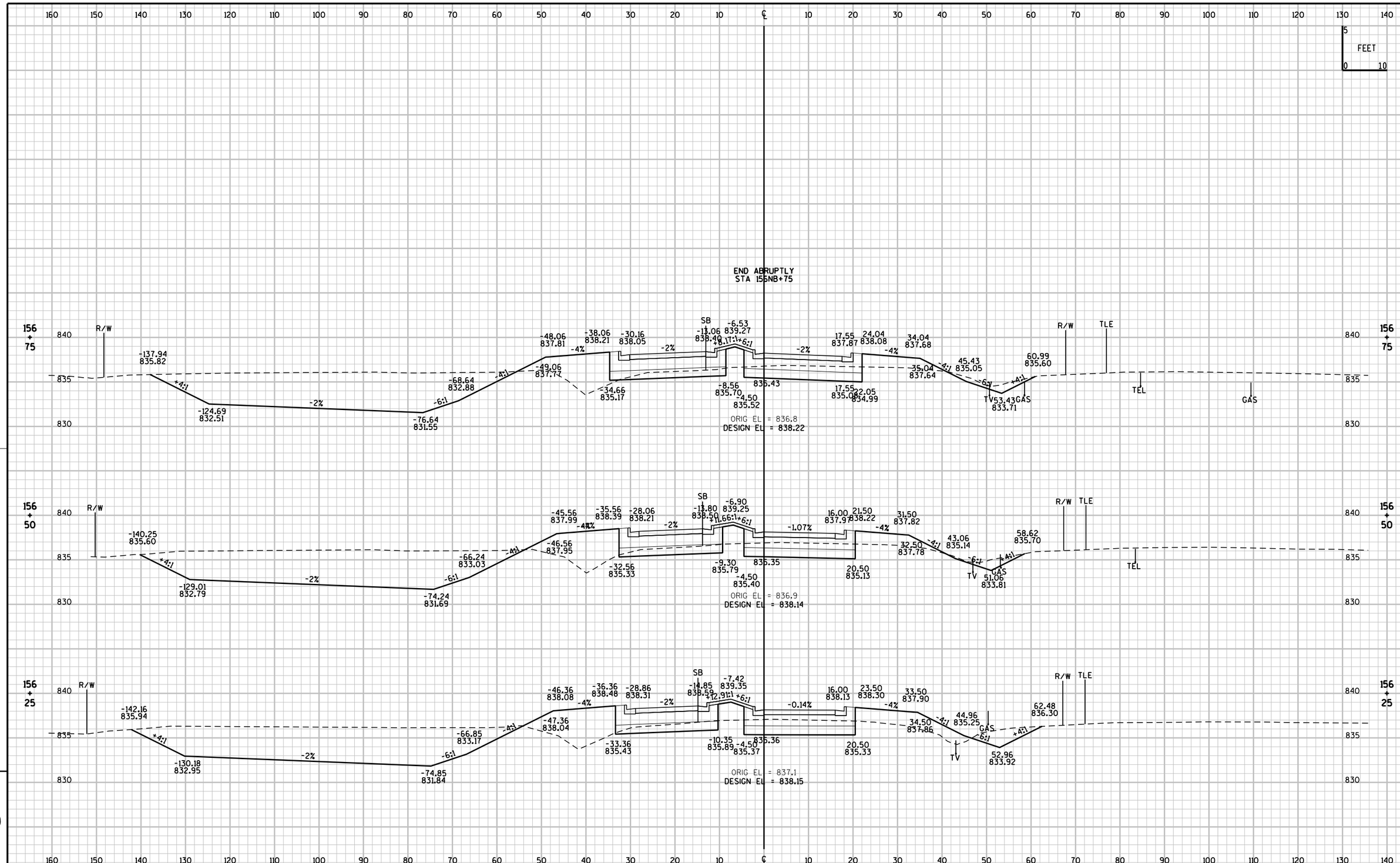

PROJECT NO:1500-32-71	HWY:USH 10	COUNTY:CALUMET	CROSS SECTIONS:STH 32/57 SOUTH	SHEET 221	E

FILE NAME : F:\TR\JOBS\E1865A08\Sheets\Plan\15003271_090226_xs.dgn PLOT DATE : 6/15/2011 4:51:14 PM PLOT BY : OMNNI- knuthc PLOT NAME : PLOT SCALE : 2.00 " / IN.

WISDOT/CADDS SHEET 21

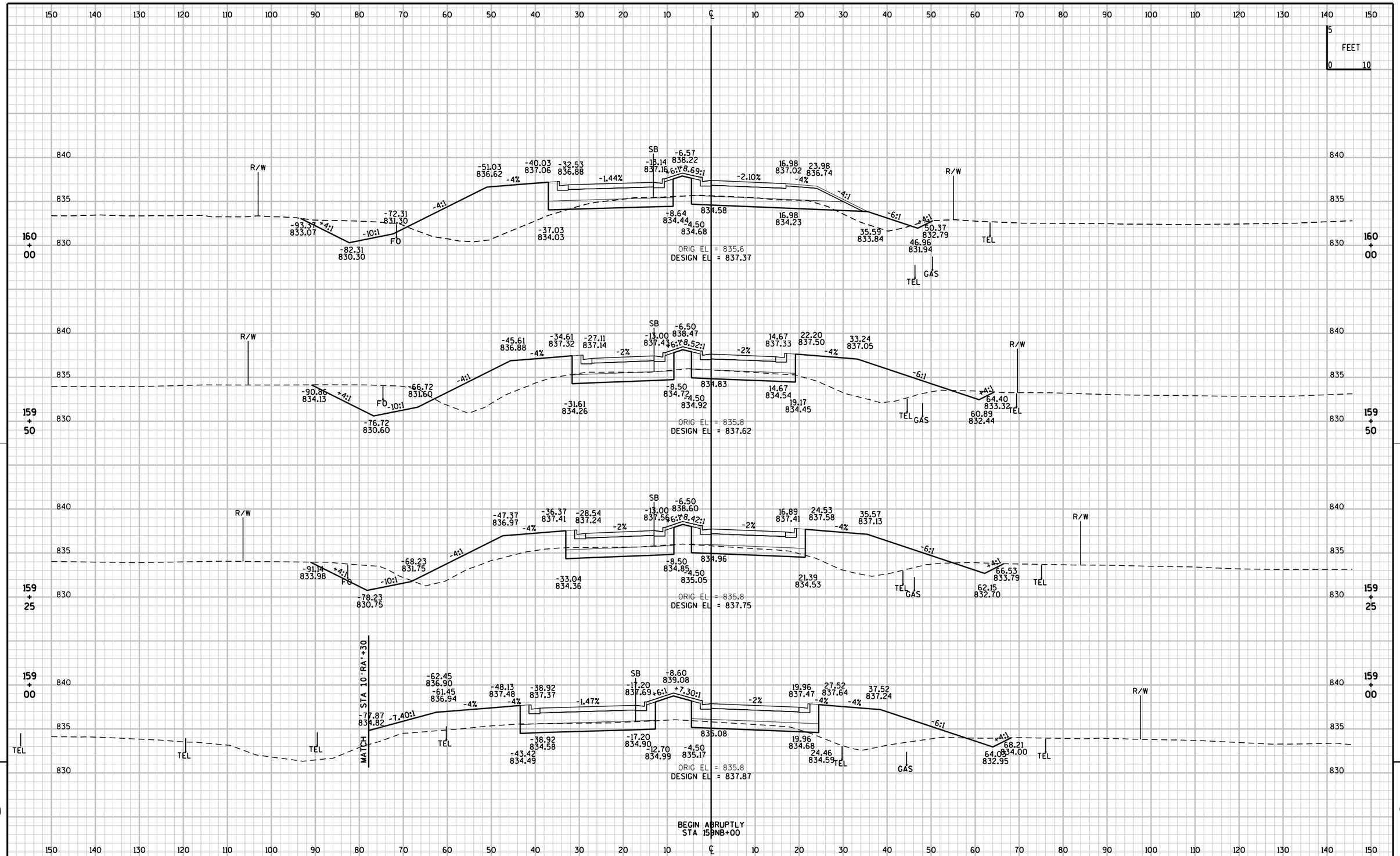

PROJECT NO:1500-32-71	HWY:USH 10	COUNTY:CALUMET	CROSS SECTIONS:STH 32/57 NORTH	SHEET 222	E

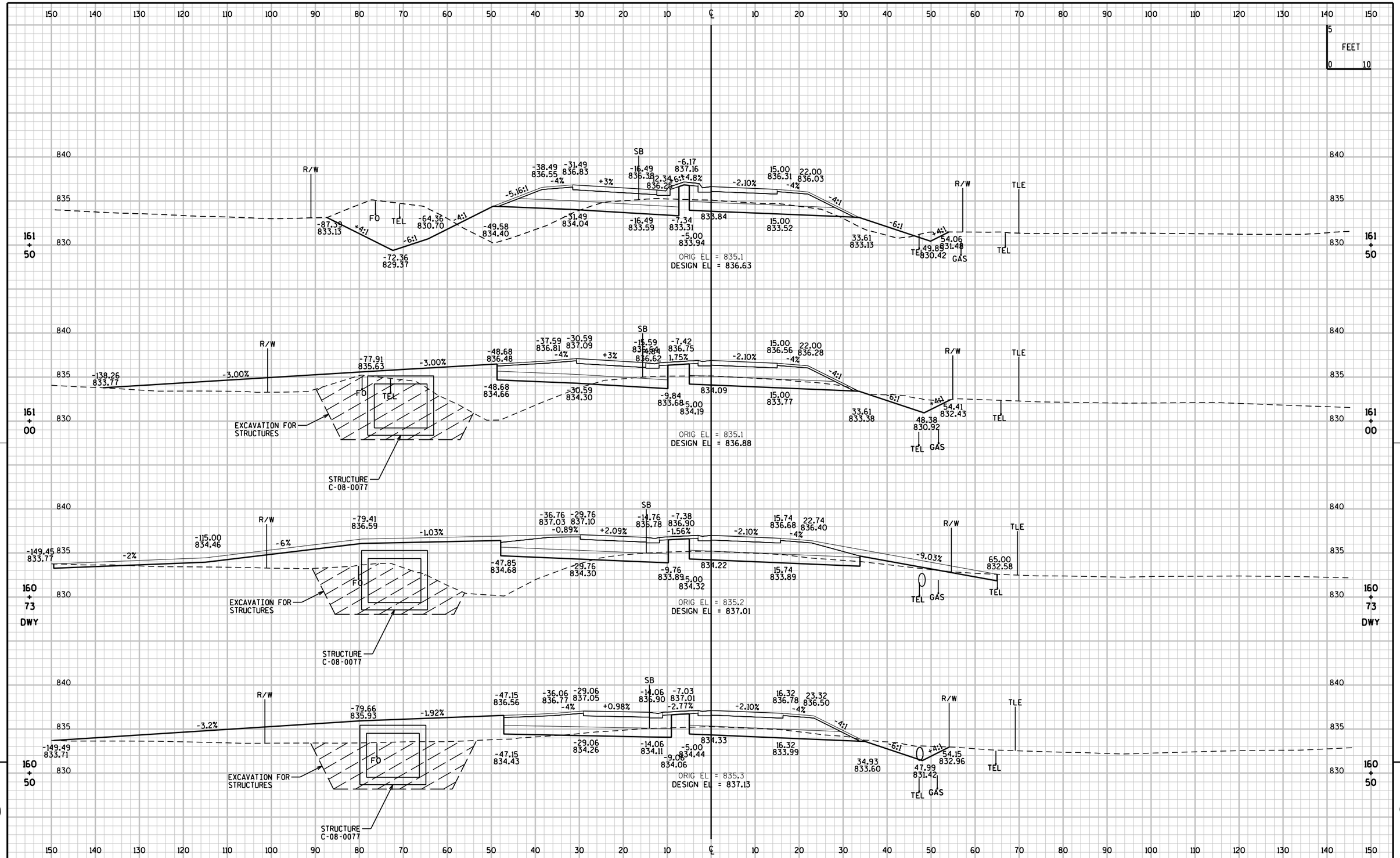

PROJECT NO: 1500-32-71	HWY: USH 10	COUNTY: CALUMET	CROSS SECTIONS: STH 32/57 NORTH	SHEET 223	E

FILE NAME : F:\TR\JOBS\E1865A08\Sheets\Plan\15003271_090232_xs.dgn PLOT DATE : 8/15/2011 11:27:44 AM PLOT BY : OMNNI- knuthc PLOT NAME : PLOT SCALE : 2.00 " / IN.

WISDOT/CADDS SHEET 21

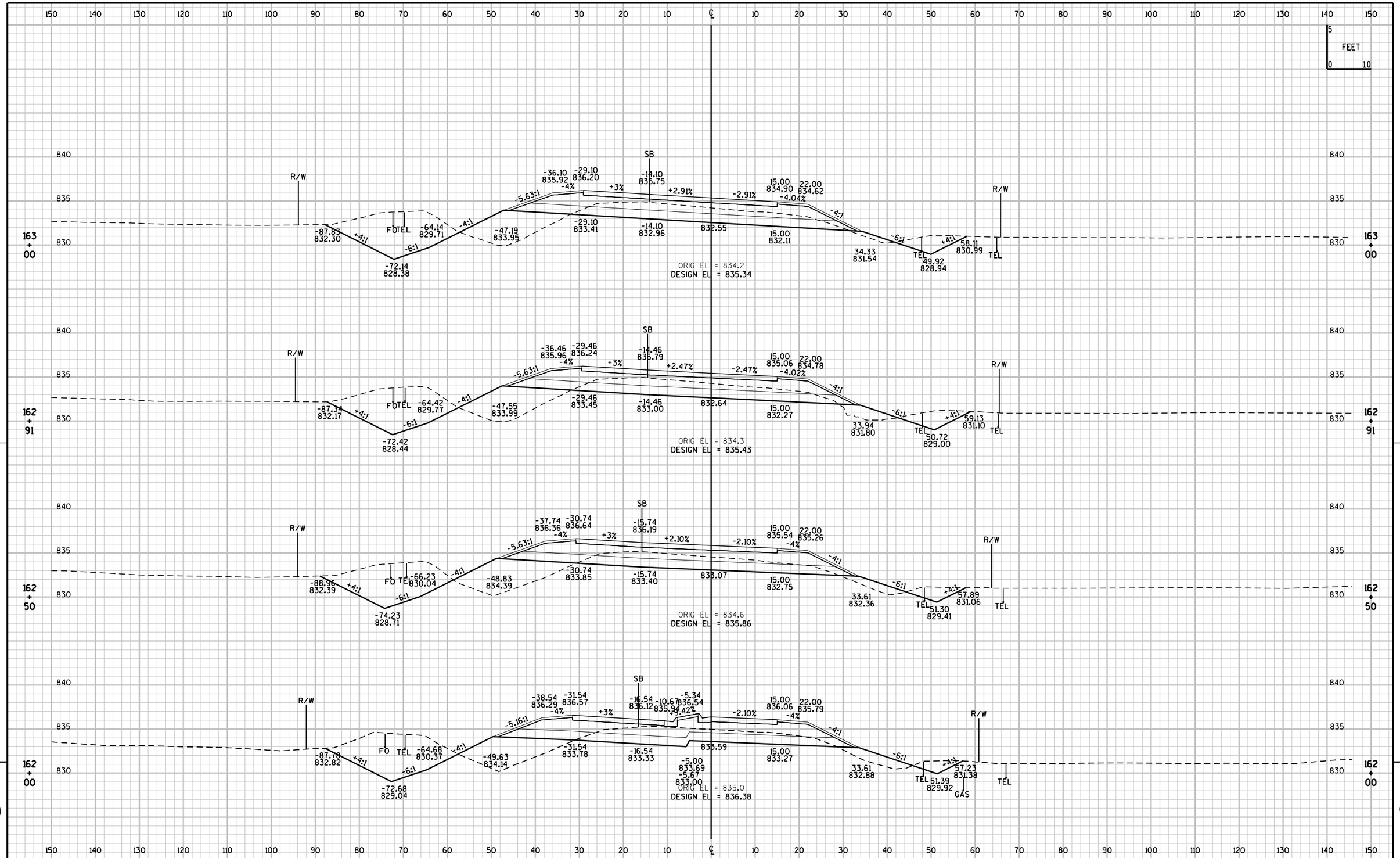

9

PROJECT NO: 1500-32-71	HWY: USH 10	COUNTY: CALUMET	CROSS SECTIONS: STH 32/57 NORTH	SHEET 224	E

FILE NAME : F:\TR\JOBS\E1865A08\Sheets\Plan\15003271_090233_xs.dgn PLOT DATE : 6/16/2011 11:49:13 AM PLOT BY : OMNNI- knuthc PLOT NAME : PLOT SCALE : 2.00 " / IN.

WISDOT/CADDS SHEET 21

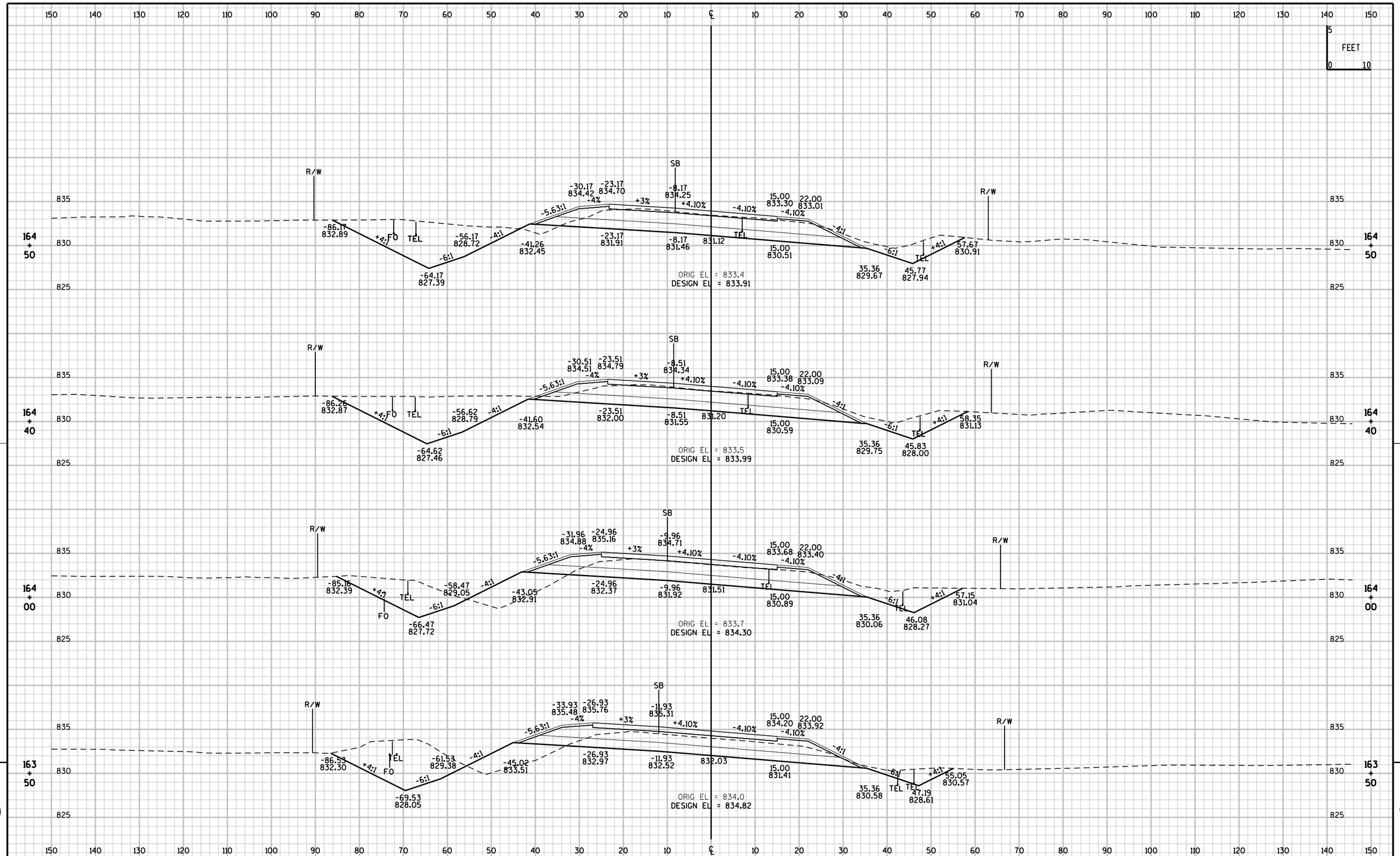

PROJECT NO:1500-32-71	HWY:USH 10	COUNTY:CALUMET	CROSS SECTIONS: STH 32/57 NORTH	SHEET 225	E

FILE NAME : F:\TR\JOBS\E1865A08\Sheets\Plan\15003271_090234_xs.dgn PLOT DATE : 6/16/2011 11:55:14 AM PLOT BY : OMNNI- knuthc PLOT NAME : PLOT SCALE : 2.00 " / IN.

WISDOT/CADDS SHEET 21

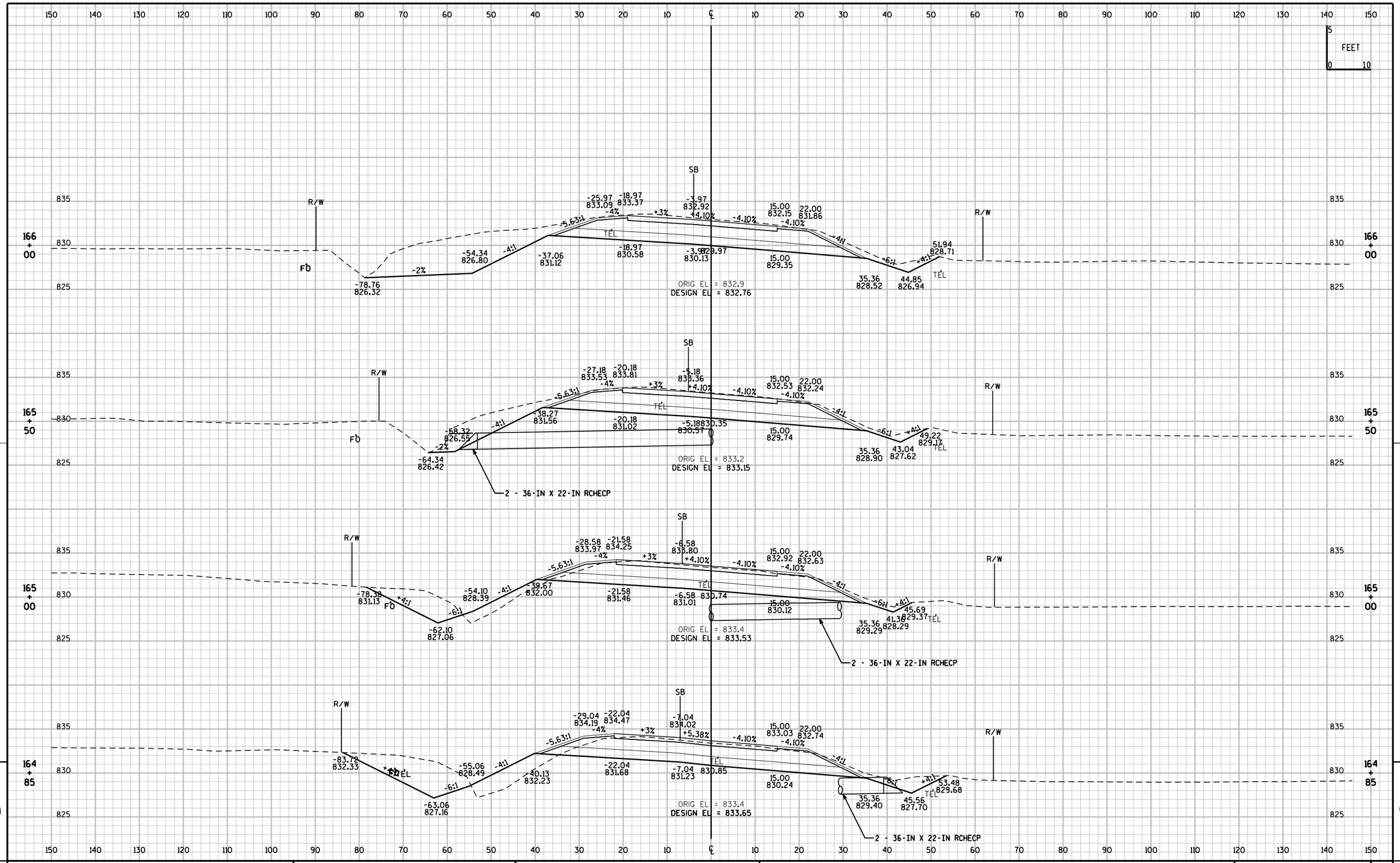

PROJECT NO:1500-32-71	HWY:USH 10	COUNTY:CALUMET	CROSS SECTIONS:STH 32/57 NORTH	SHEET 226	E

FILE NAME : F:\TR\JOBS\E1865A08\Sheets\Plan\15003271_090235_xs.dgn PLOT DATE : 6/17/2011 10:15:05 AM PLOT BY : OMNNI- knuthc PLOT NAME : PLOT SCALE : 2.00 " / IN.

WISDOT/CADDS SHEET 21

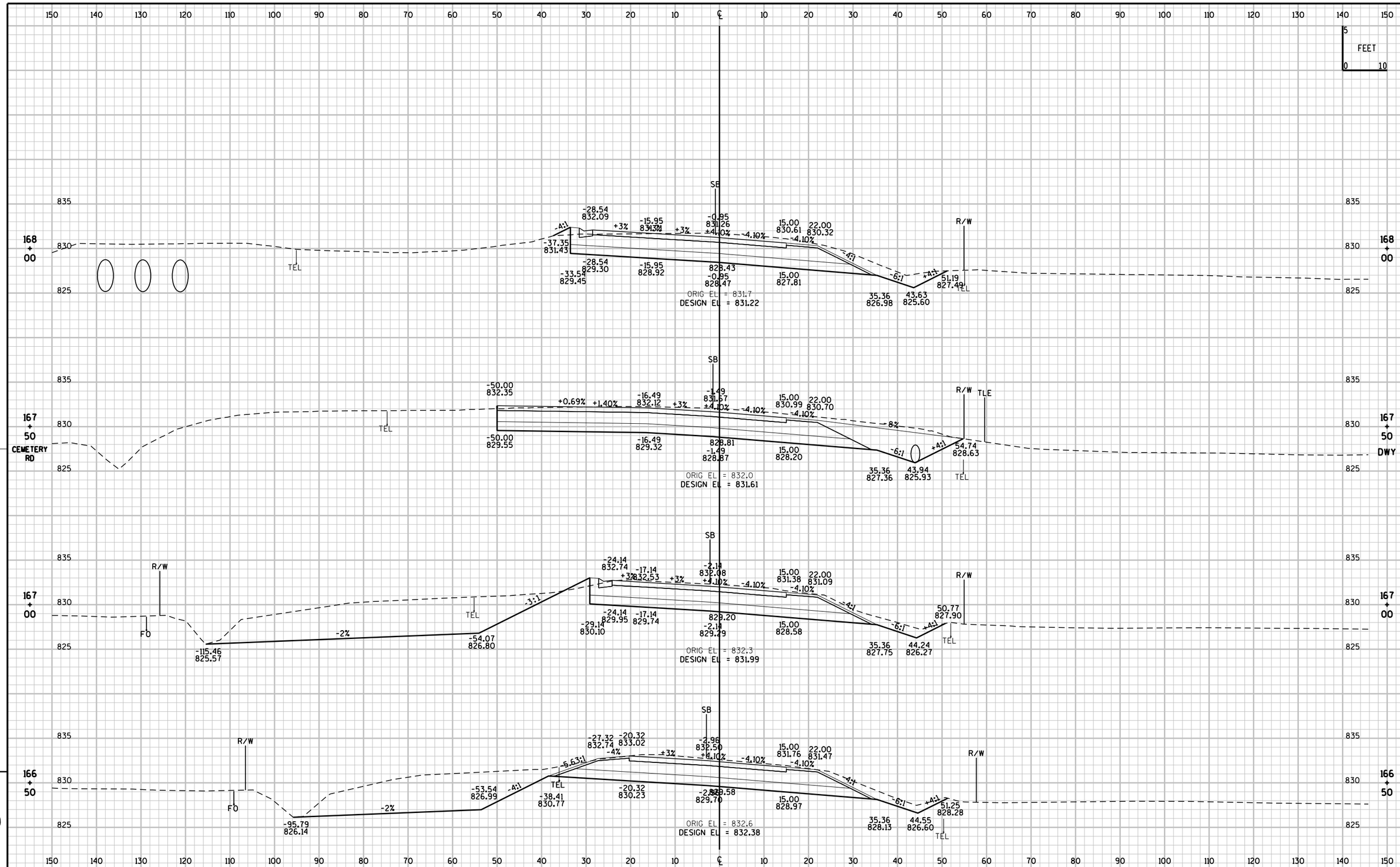

PROJECT NO:1500-32-71	HWY:USH 10	COUNTY:CALUMET	CROSS SECTIONS: STH 32/57 NORTH	SHEET 227	E

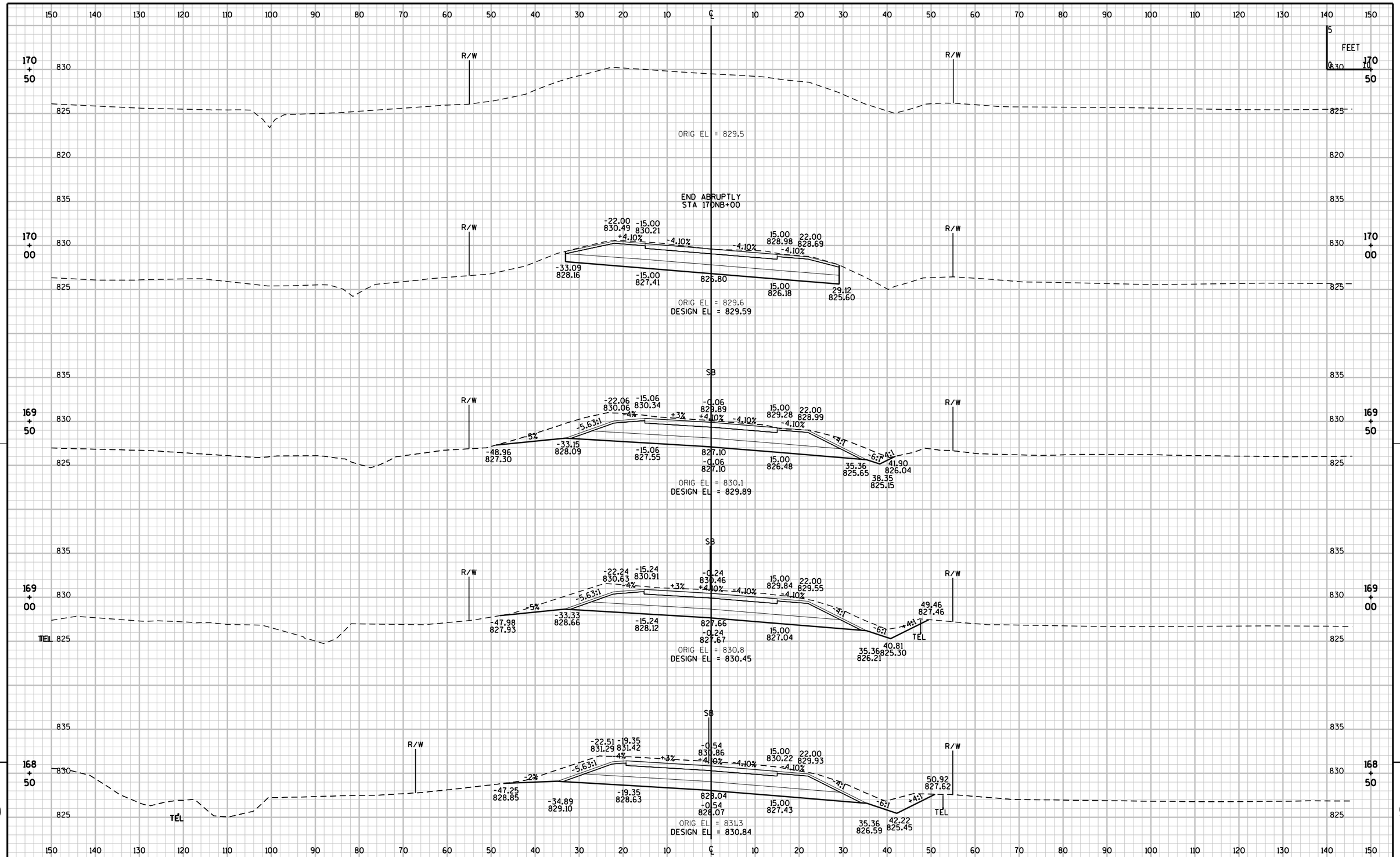

PROJECT NO:1500-32-71	HWY:USH 10	COUNTY:CALUMET	CROSS SECTIONS:STH 32/57 NORTH	SHEET 228	E

FILE NAME : F:\TR\JOBS\E1865A08\Sheets\Plan\15003271_090237_xs.dgn PLOT DATE : 6/17/2011 8:51:41 AM PLOT BY : OMNNI- knuthc PLOT NAME : PLOT SCALE : 2.00 " / IN.

WISDOT/CADDS SHEET 21

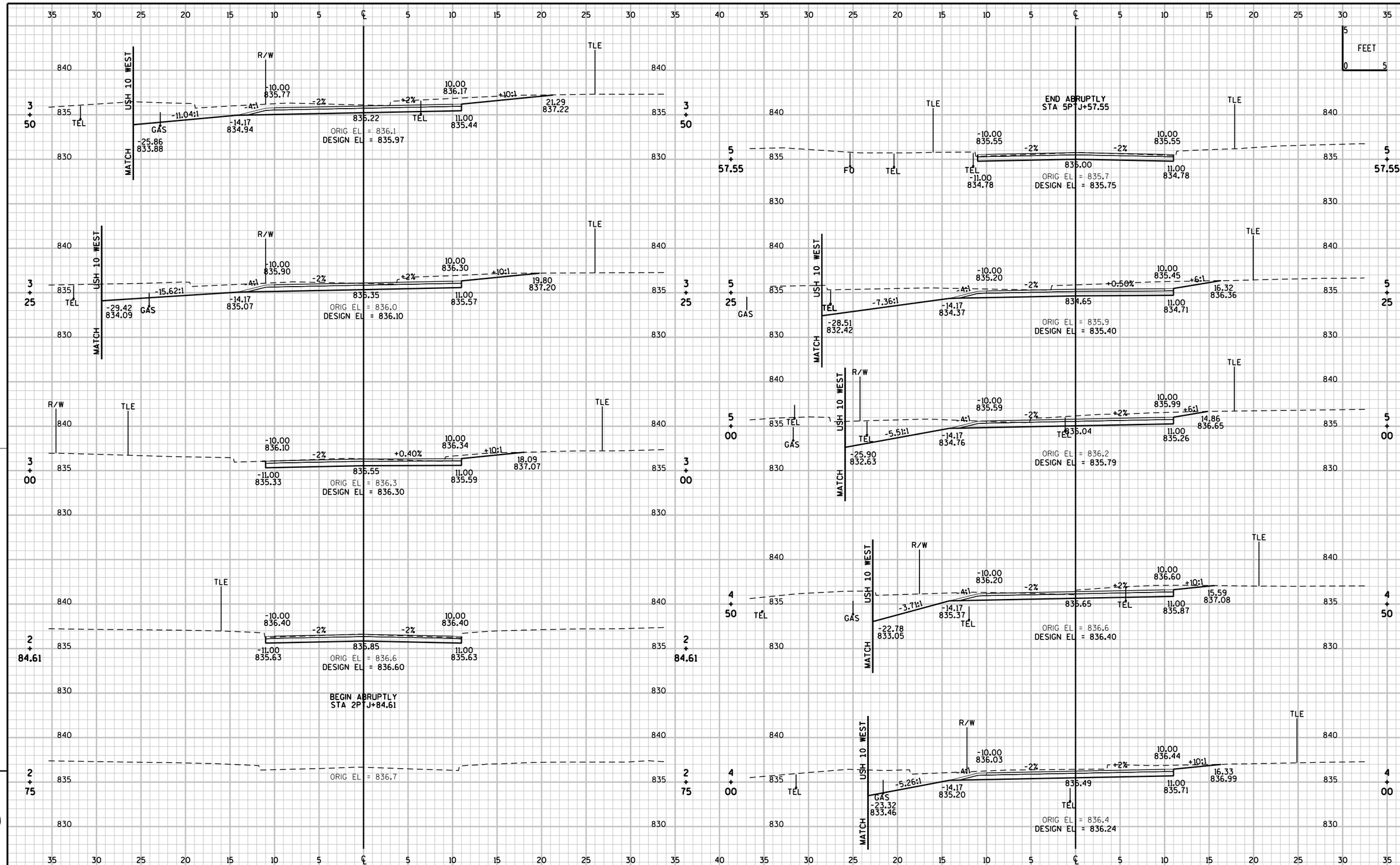

PROJECT NO:1500-32-71	HWY:USH 10	COUNTY:CALUMET	CROSS SECTIONS: PEACH TREE LN / JUNIPER DR	SHEET 229	E

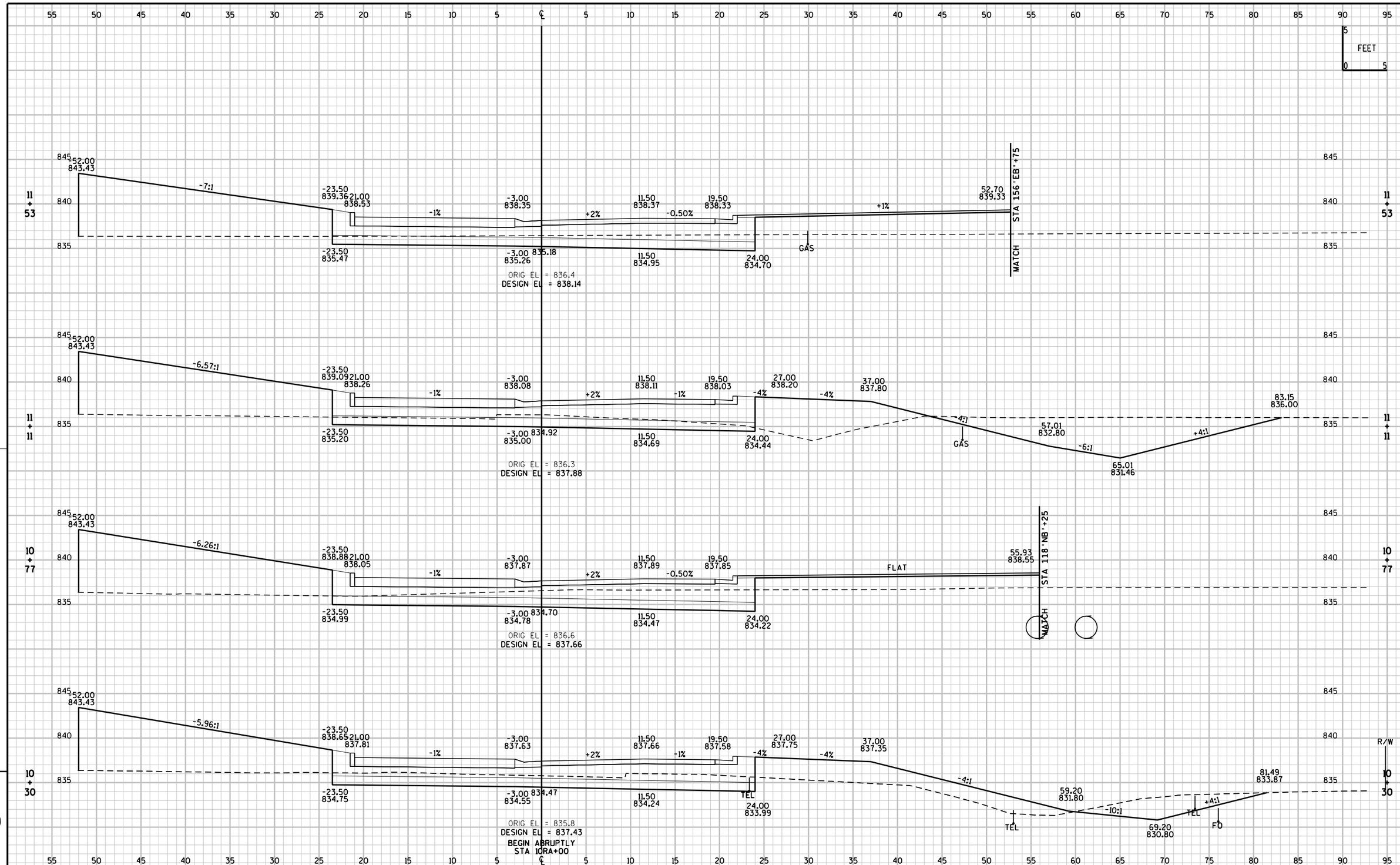

PROJECT NO:1500-32-71	HWY:USH 10	COUNTY:CALUMET	CROSS SECTIONS:ROUNDABOUT	SHEET 230	E

FILE NAME : F:\TR\JOBS\E1865A08\Sheets\Plan\15003271_090261_xs.dgn PLOT DATE : 2/7/2012 9:17:19 AM PLOT BY : OMNNI- knuthc PLOT NAME : PLOT SCALE : 2.00 " / IN.

WISDOT/CADDS SHEET 21

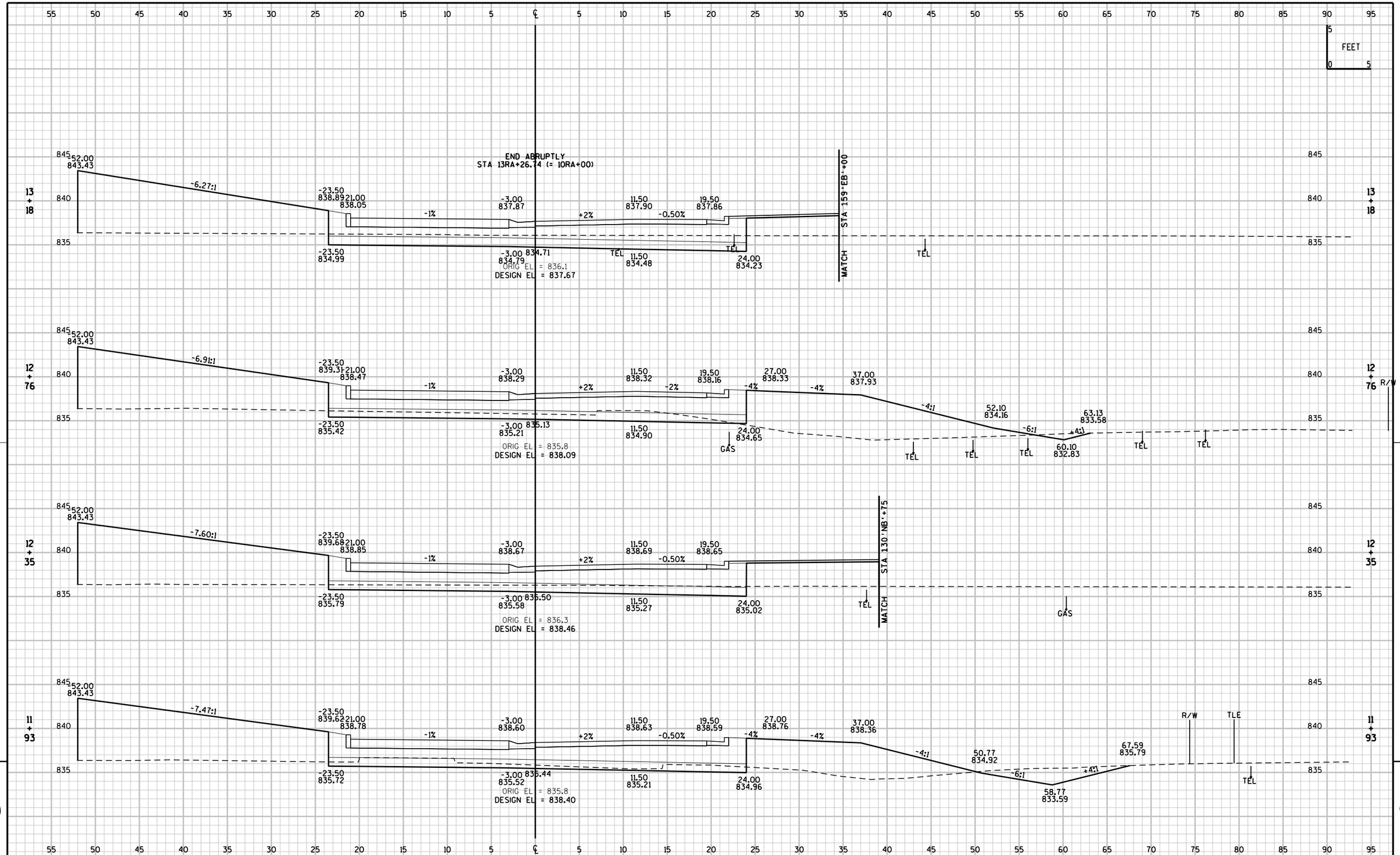

PROJECT NO: 1500-32-71	HWY: USH 10	COUNTY: CALUMET	CROSS SECTIONS: ROUNDABOUT	SHEET 231	E

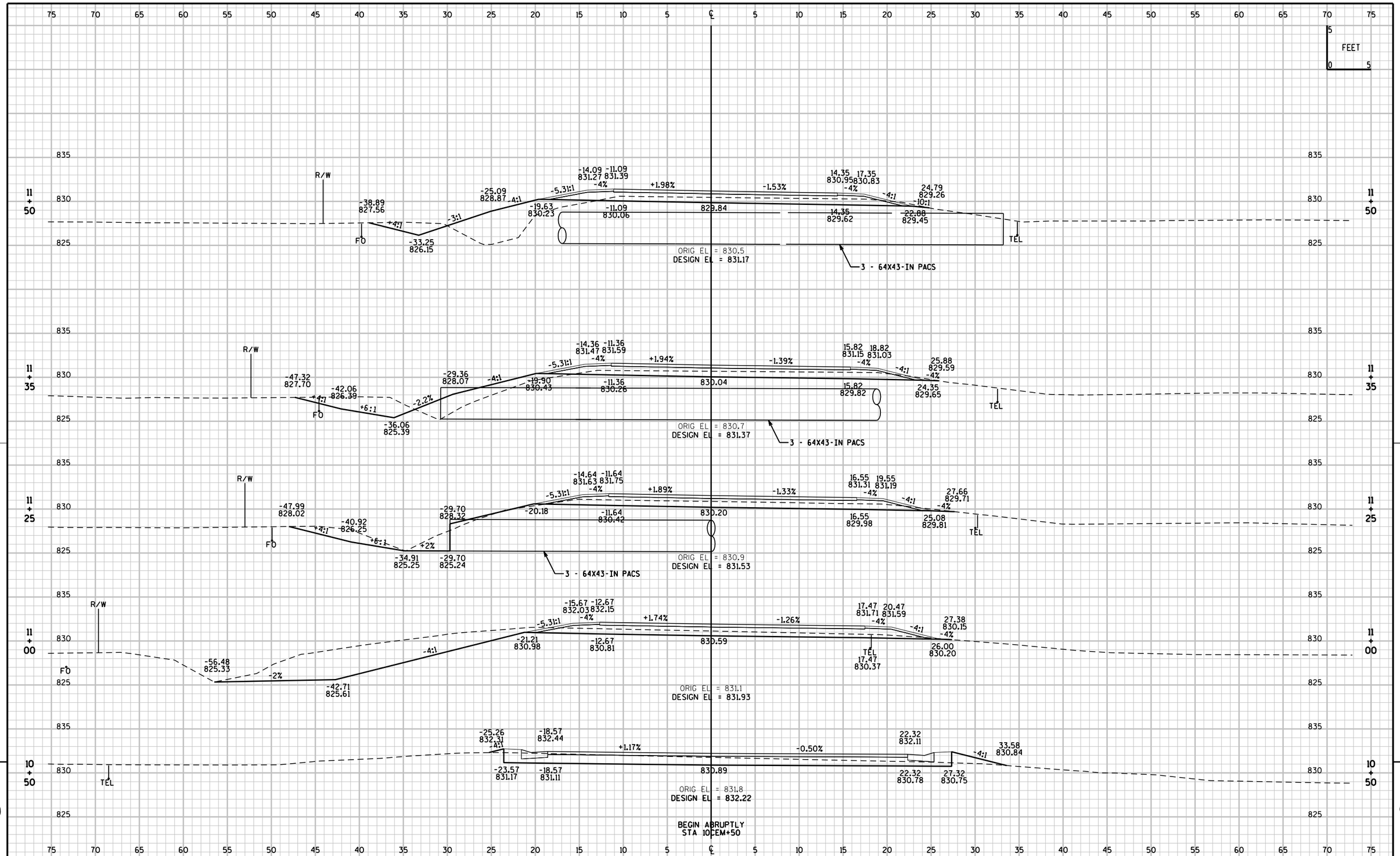

PROJECT NO:1500-32-71	HWY:USH 10	COUNTY:CALUMET	CROSS SECTIONS:CEMETERY ROAD	SHEET 232	E

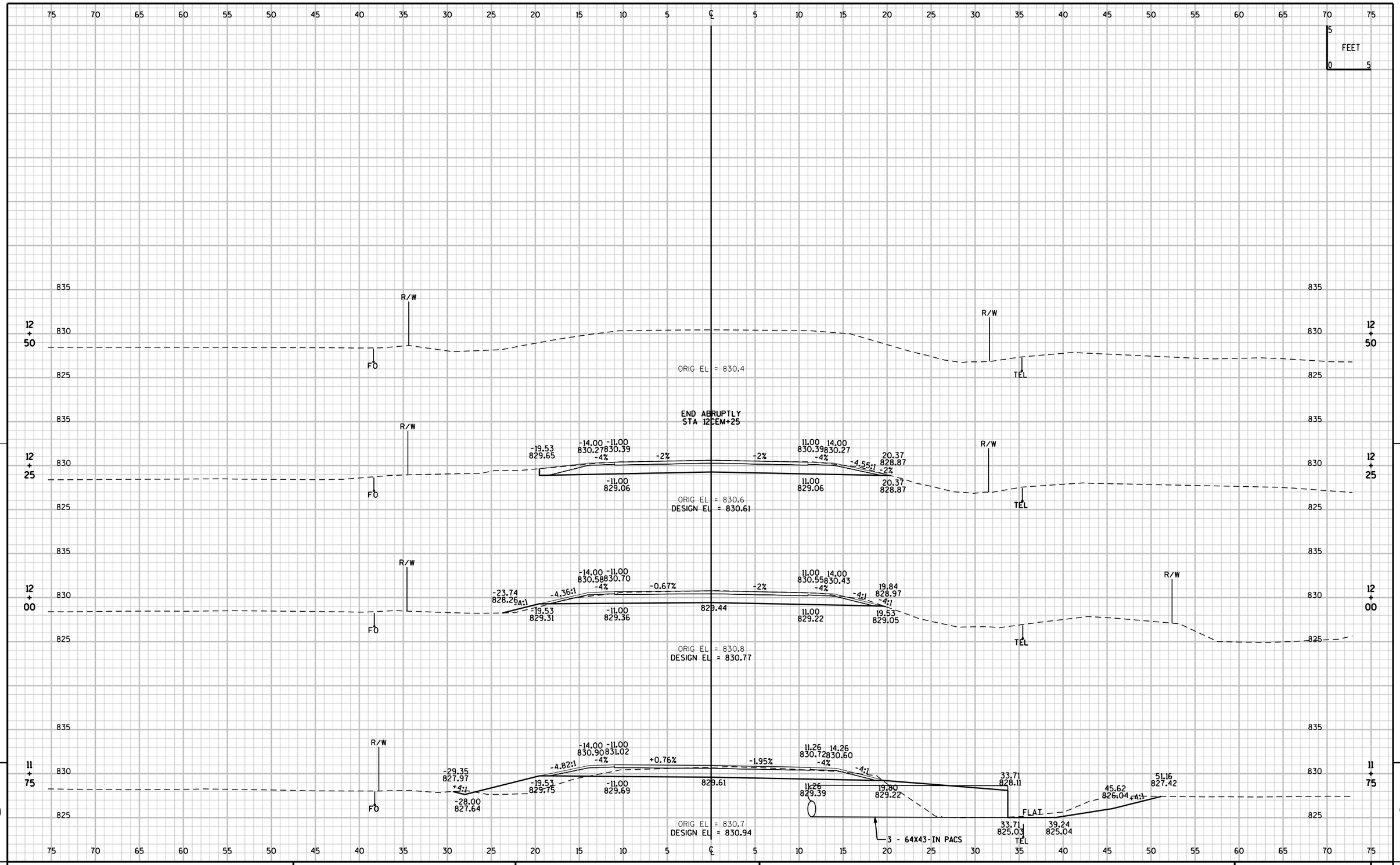

PROJECT NO:1500-32-71	HWY:USH 10	COUNTY:CALUMET	CROSS SECTIONS:CEMETERY ROAD	SHEET 233	E

Wisconsin Department of Transportation

Dedicated people creating transportation solutions through innovation and exceptional service.

http://www.dot.wisconsin.gov