NWL MAY 2013

PROJECT ID: 8900-06-76

COUNTY: TAYLOR

ORDER OF SHEETS

Section No.	1	Title
Section No.	2	Typical Sections and Details
Section No.	3	Estimate of Quantities
Section No.	3	Miscellaneous Quantities
Section No.	4	Right of Way Plat
Section No.	5	Plan and Profile (includes erosion control)
Section No.	6	Standard Detail Drawings
Section No.	7	Sign Plates
~~Section No.~~	~~8~~	~~Structure Plans~~
Section No.	9	Computer Earthwork Data
Section No.	9	Cross Sections

TOTAL SHEETS = 220

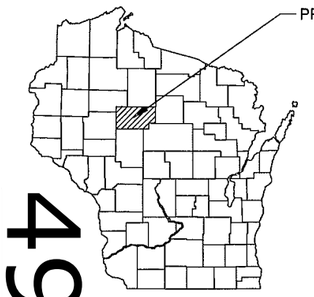

49

DESIGN DESIGNATION

A.A.D.T. 2013	=	680
A.A.D.T. 2033	=	840
D.H.V.	=	143
D.D.	=	60/40
T.	=	7%
DESIGN SPEED	=	55 MPH
ESALS	=	146,000

CONVENTIONAL SYMBOLS

COUNTY LINE
CORPORATE LIMITS
PROPERTY LINE
LOT LINE
LIMITED EASEMENT
EARTHWORK BALANCE POINT
EXISTING RIGHT OF WAY
PROPOSED OR NEW R/W LINE
SURVEY LINE
SLOPE INTERCEPT
ORIGINAL GROUND
MARSH OR ROCK PROFILE (To be noted as such)
MARSH AREA
WOODED OR SHRUB AREA
COMBUSTIBLE FLUIDS
HIGH VOLTAGE ELECTRIC LINE
UNDERGROUND UTILITIES
GAS
ELECTRIC
TELEPHONE OR TELEGRAPH
TV/CABLE
SERVICE PEDESTAL
POWER POLE
TELEPHONE POLE
RAILROAD
SANITARY SEWER
STORM SEWER
WATER
EXISTING CULVERT
PROPOSED CULVERT (Box or Pipe)
CULVERT (Profile View)

STATE OF WISCONSIN
DEPARTMENT OF TRANSPORTATION

PLAN OF PROPOSED IMPROVEMENT

WESTBORO - RIB LAKE

(BUSINESS 13 SOUTH TO WELL STREET)

CTH D

TAYLOR COUNTY

STATE PROJECT	FEDERAL PROJECT	
	PROJECT	CONTRACT
8900-06-76	WISC 2013291	1

STATE PROJECT NUMBER
8900-06-76

BEGIN PROJECT
STA 100+62.92
Y = 417606.371
X = 662038.095

EXCEPTION TO NET CENTERLINE LENGTH
STA 115+00.78 TO STA 115+81.12
STR B-60-0019

END PROJECT
STA 419+73.85

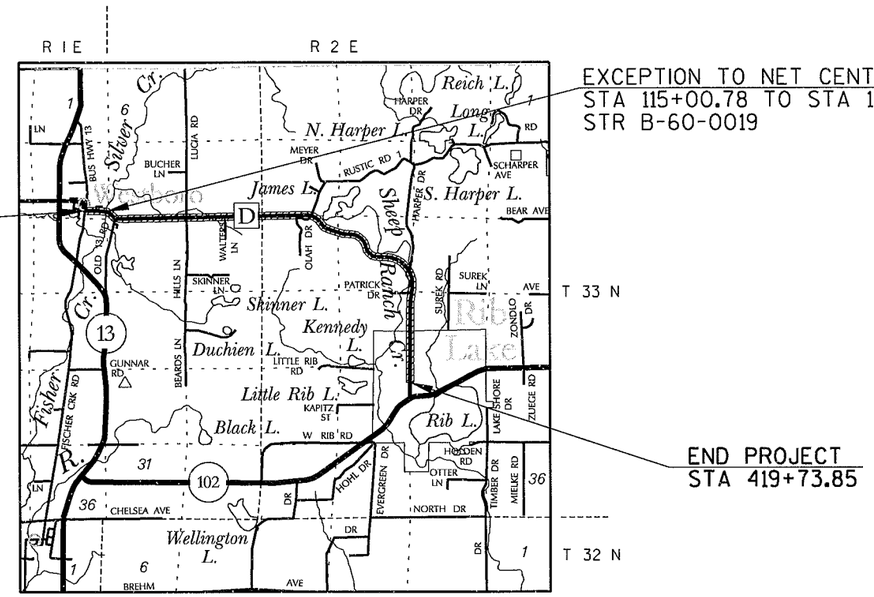

LAYOUT
SCALE 0 1 MI.

TOTAL NET LENGTH OF CENTERLINE = 6.029 MI.

Coordinates on this plan are referenced to the Wisconsin County Coordinate System (WCCS), Taylor County.

ACCEPTED FOR
COUNTY of TAYLOR
1-9-13 DATE: HIGHWAY COMMISSIONER

ORIGINAL PLANS PREPARED BY:

STATE OF WISCONSIN
DEPARTMENT OF TRANSPORTATION

PREPARED BY
Surveyor: SEH
Designer: SEH

Management Consultant: KJOHNSON ENGINEERS
C.O. Examiner:

APPROVED FOR DEPARTMENT
DATE: 1/31/13 (Management Consultant Signature)

E

STANDARD ABBREVIATIONS

ABUT	ABUTMENT
AC	ACRE
AGG	AGGREGATE
AECPRC	APRON ENDWALL FOR CULVERT PIPE REINFORCED CONCRETE
ASPH	ASPHALTIC
AVG	AVERAGE
ADT	AVERAGE DAILY TRAFFIC
BF	BACK FACE
BM	BENCH MARK
BR	BRIDGE
CE	COMMERCIAL ENTRANCE
CL OR C/L OR ℄	CENTER LINE
△	CENTRAL ANGLE OR DELTA
CONC	CONCRETE
CPRC	CULVERT PIPE REINFORCED CONCRETE
CPRCHE	CULVERT PIPE REINFORCED CONCRETE HORIZONTAL ELLIPTICAL
CR	CREEK
CY	CUBIC YARD
C & G	CURB AND GUTTER
D	DEGREE OF CURVE
DHV	DESIGN HOUR VOLUME
DISCH	DISCHARGE
DG	DITCH GRADE
DWY	DRIVEWAY
X	EAST GRID COORDINATE
EAT	STEEL PLATE BEAM GUARD ENERGY ABSORBING TERMINAL
EOR	END POINT OF RADIUS
EL	ELEVATION
ENT	ENTRANCE
ESALS	EQUIVALENT SINGLE AXLE LOADS
EXC	EXCAVATION
EBS	EXCAVATION BELOW SUBGRADE
EXIST	EXISTING
FC	FACE OF CURB
FF	FACE TO FACE
FERT	FERTILIZE
FE	FIELD ENTRANCE
FL	FLOW LINE
FO	FIBER OPTIC
CWT	HUNDREDWEIGHT
HYD	HYDRANT
ID	INSIDE DIAMETER
INV	INVERT
IP	IRON PIPE ON PIN
LHF	LEFT-HAND FORWARD
L	LENGTH OF CURVE
LF	LINEAR FOOT
LC	LONG CHORD OF CURVE
LS	LUMP SUM
MH	MANHOLE
MOR	MID POINT OF RADIUS
NC	NORMAL CROWN
NO	NUMBER
OBLIT	OBLITERATE
PAVT	PAVEMENT
PE	PRIVATE ENTRANCE
PVRC	POINT OF VERTICAL REVERSE CURVE
QOR	QUARTER POINT OF RADIUS
R	RADIUS
REQ'D	REQUIRED
RES	RESIDENCE OR RESIDENTIAL
RHF	RIGHT-HAND FORWARD
R/W	RIGHT-OF-WAY
R	RIVER
RDWY	ROADWAY
R/L OR ℄	REFERENCE LINE
SALV	SALVAGED
SAN	SANITARY SEWER
SF	SQUARE FEET
SY	SQUARE YARD
SDD	STANDARD DETAIL DRAWINGS
STA	STATION
SS	STORM SEWER
SSPRC	STORM SEWER PIPE REINFORCED CONCRETE
SE	SUPERELEVATION RATE
TC	TOP OF CURB
T OR TN	TOWN
T	TRUCKS (PERCENT OF)
TYP	TYPICAL
VAR	VARIABLE
VC	VERTICAL CURVE
Y	NORTH GRID COORDINATE
YD	YARD

GENERAL NOTES

ELEVATIONS SHOWN ON THE PLAN ARE REFERENCED TO THE APPROXIMATE USGS DATUM.

WHEN THE QUANTITY OF BASE AGGREGATE OR ASPHALTIC PAVEMENT IS MEASURED FOR PAYMENT BY THE TON OR CUBIC YARD, THE DEPTH OR THICKNESS OF THE LAYER SHOWN ON THE PLANS IS APROXIMATE AND THE ACTUAL THICKNESS WILL DEPEND ON THE DISTRIBUTION OF THE MATERIAL AS DIRECTED BY THE ENGINEER.

THE LOCATION OF EXISTING AND PROPOSED UTILITY INSTALLATIONS AS SHOWN ON THE PLANS IS APPROXIMATE. THERE MAY BE OTHER UTILITY INSTALLATIONS WITHIN THE PROJECT AREA THAT ARE NOT SHOWN.
NO TREES OR SHRUBS ARE TO BE REMOVED WITHOUT THE APPROVAL OF THE ENGINEER.

CURVE DATA IS BASED ON THE ARC DEFINITION.

THE EXACT LOCATION OF THE EROSION CONTROL DEVICES SHALL BE DETERMINED IN THE FIELD.

DISTURBED AREAS WITHIN THE RIGHT-OF-WAY, EXCEPT THE AREAS WITHIN THE FINISHED SHOULDER POINTS, ARE TO BE 4-INCH SALVAGED TOPSOILED, FERTILIZED, SEEDED AND MULCHED.

BEARINGS SHOWN ON THE PLANS ARE GROUND BEARINGS TO THE NEAREST SECOND.

A VERTICAL SAWCUT SHALL BE MADE THROUGH EXISTING DRIVEWAYS AND PAVEMENTS AT REMOVAL LIMITS.

PULVERIZED LIMITS INCLUDE ALL EXISTING ASPHALTIC PAVEMENT ON THE MAINLINE AND ANY ASPHALTIC PAVED SHOULDER. PULVERIZED WIDTH VARIES BETWEEN 22' AND 24'

3.75 IN HMA PAVEMENT 1.75 IN UPPER LAYER AND A 2 IN LOWER LAYER.

4.25 IN HMA PAVEMENT 2 IN UPPER LAYER AND A 2.25 IN LOWER LAYER

SILT FENCE IS TO BE PLACED AS SHOWN ON THE PLANS OR AS DIRECTED BY THE ENGINEER, AND IN PLACE PRIOR TO BRIDGE REMOVAL.

BEARINGS SHOWN ON THE PLAN ARE REFERENCED TO THE EXISTING ROADWAY CENTERLINE AND ARE ASSUMED.

WETLANDS ARE PRESENT ALONG THE PROJECT. DO NOT OPERATE MACHINERY OUTSIDE THE LIMITS OF THE SLOPE INTERCEPTS.

UTILITY CONTACTS

VILLAGE OF RIB LAKE PUBLIC WORKS
741 MCCOMB AVENUE
RIB LAKE, WI 54470
TELEPHONE: 715.905.1030
ATTENTION: JERRY BUTLER
EMAIL: RLGARAGE@FRONTIER.GOV

WESTBORO SANITARY DISTRICT
W4861 COUNTY ROAD D
WESTBORO, WI 54490
TELEPHONE: 715.427.5867
ATTENTION: JEFF PETERSON

FRONTIER COMMUNICATIONS
53 NORTH STEVENS STREET
RHINELANDER, WI 54501
TELEPHONE: 715-365-2237
ATTENTION: GLEN LEFEBVRE
EMAIL: GLEN.LEFEBVRE@FTR.COM

PRICE ELECTRIC COOPERATIVE
508 N LAKE AVENUE
PO BOX 110
PHILLIPS, WI 54555
TELEPHONE: 715.339.2155
ATTENTION: JASON WEIK
EMAIL: JWEIK@PRICE-ELECTRIC.COM

NORTHERN NATURAL GAS
1995 NORTHERN NATURAL GAS ROAD
CHARLTON, MN 55718
TELEPHONE: 402.530.3466
ATTENTION: JEFF TELKER
EMAIL: JEFF.TELKER@NNGCO.COM

XCEL ENERGY GAS AND ELECTRIC DISTRIBUTION
310 HICKORY HILLS LN
PHILLIPS, WI 54555
TELEPHONE: 715.73731198
ATTENTION: JASON MCROBERTS
EMAIL: JASON.L.MCROBERTS@XCELENERGY.COM

811 DIGGERS HOTLINE

CALL 811 OR (800)242.8511
(877)500.9592 (EMERGENCY ONLY)
www.DiggersHotline.com

** NOT A MEMBER
OF DIGGERS HOTLINE

DESIGN CONTACT

SEH INC.
421 FRENETTE DRIVE
CHIPPEWA FALLS, WI 54729
TELEPHONE: 715.720.6200
ATTENTION: DAN GUSTAFSON
EMAIL:DGUSTAFSON@SEHINC.COM

W.D.N.R. CONTACT

WI DEPT. OF NATURAL RESOURCES
801 W MAPLE STREET
SPOONER, WI 54801
TELEPHONE: 715.635.4227
ATTENTION: WILLIAM GANTZ
EMAIL: WILLIAM.GANTZ@WISCONSIN.GOV

2

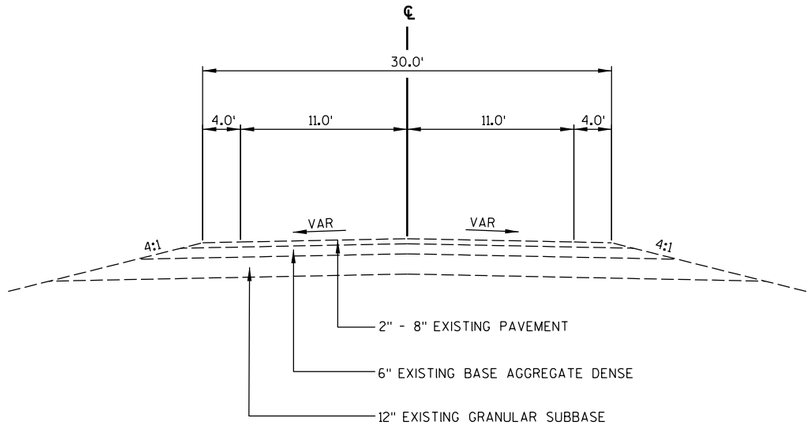

TYPICAL EXISTING SECTION

CTH D
STA 100+62.92 TO STA 419+73.85

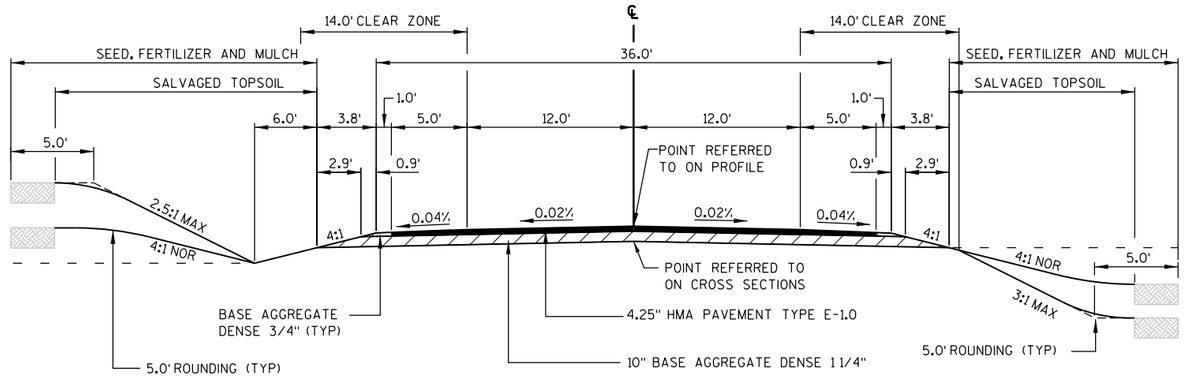

TYPICAL FINISHED SECTION

CTH D
STA 100+62.92 TO STA 111+00.00

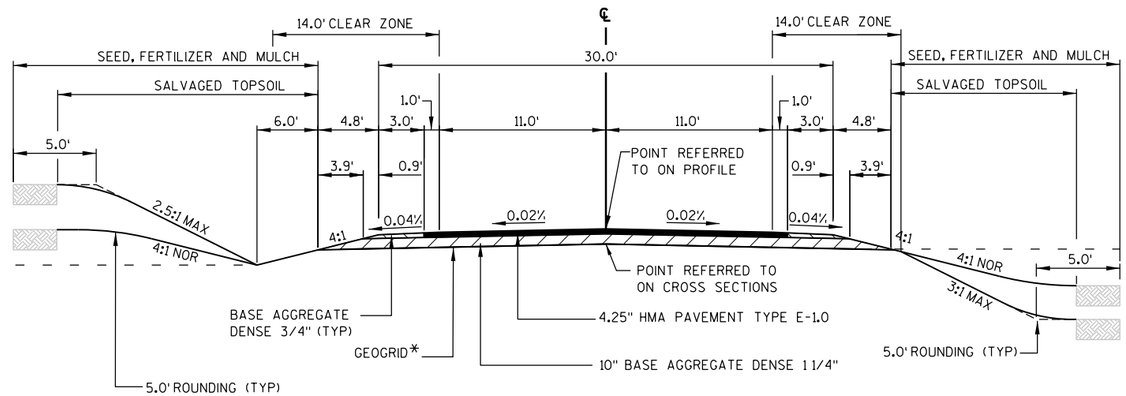

TYPICAL FINISHED SECTION

CTH D
STA 171+25.00 TO STA 181+45.00
*STA 179+50.00 TO STA 181+45.00

PROJECT NO: 8900-06-76	HWY: CTH D	COUNTY: TAYLOR	TYPICAL SECTIONS	SHEET 3	E

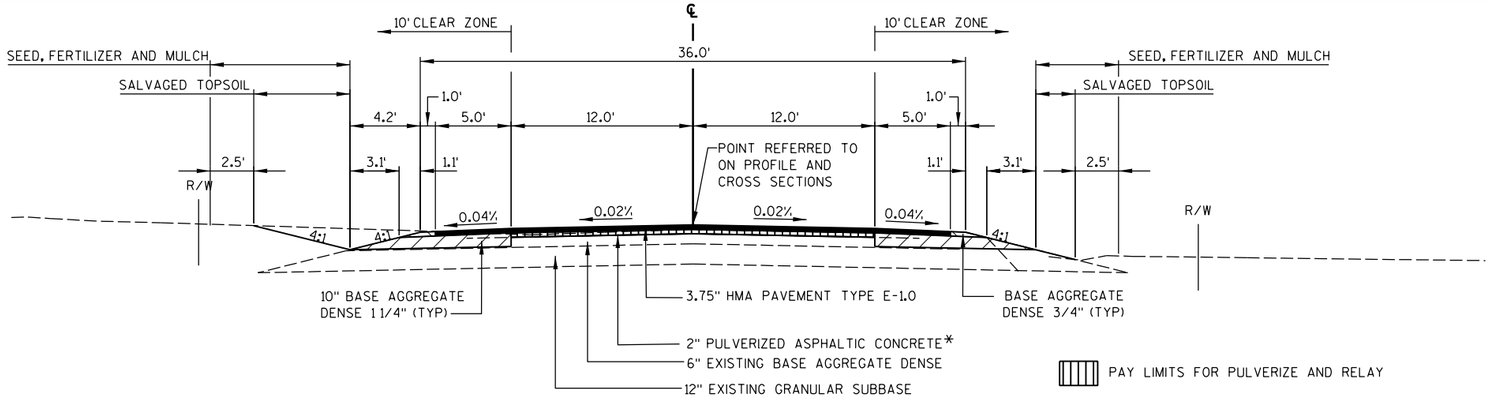

TYPICAL FINISHED SECTION

CTH D
STA 111+00.00 TO STA 115+78.00

* MINIMUM PULVERIZING DEPTH TO BE 6"

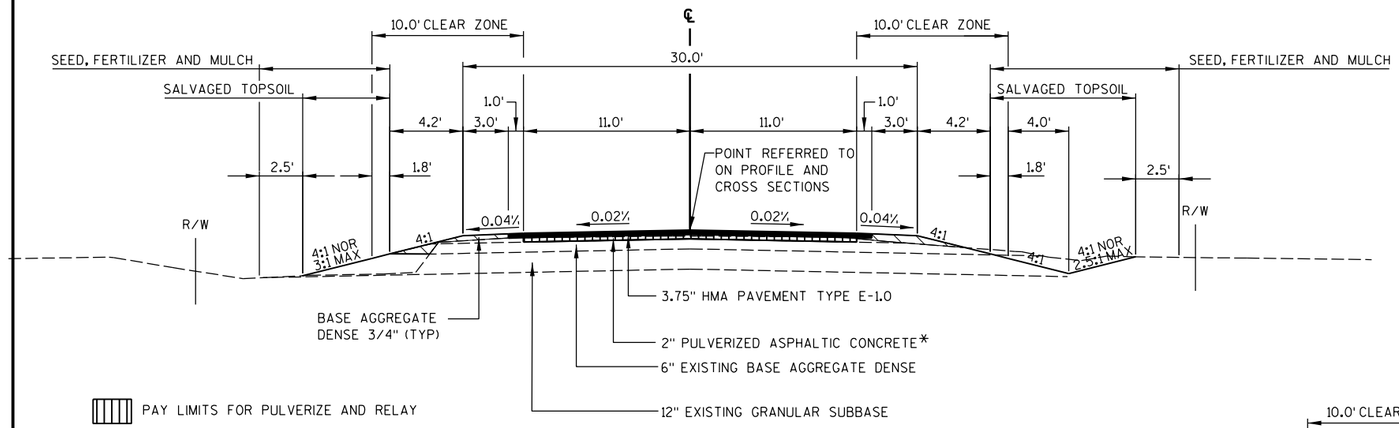

TYPICAL FINISHED SECTION

CTH D
STA 115+81.12 TO STA 147+00.00
STA 149+00.00 TO STA 171+25.00
STA 181+45.00 TO STA 227+00.00
STA 246+00.00 TO STA 253+50.00
STA 255+00.00 TO STA 267+50.00
STA 271+50.00 TO STA 276+00.00
STA 280+00.00 TO STA 287+00.00
STA 293+00.00 TO STA 357+00.00
STA 361+00.00 TO STA 375+00.00

* MINIMUM PULVERIZING DEPTH TO BE 6"

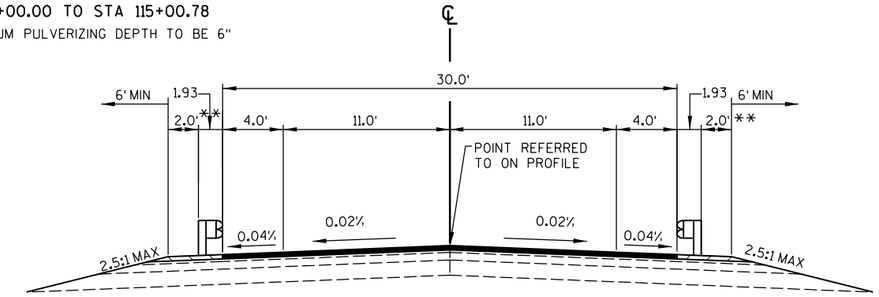

TYPICAL FINISHED BEAM GUARD SECTION

** MGS 3 K WITH REDUCED SHOULDER WIDTH
INSTALLED AT STA 307+99.4 TO STA 310+03.2

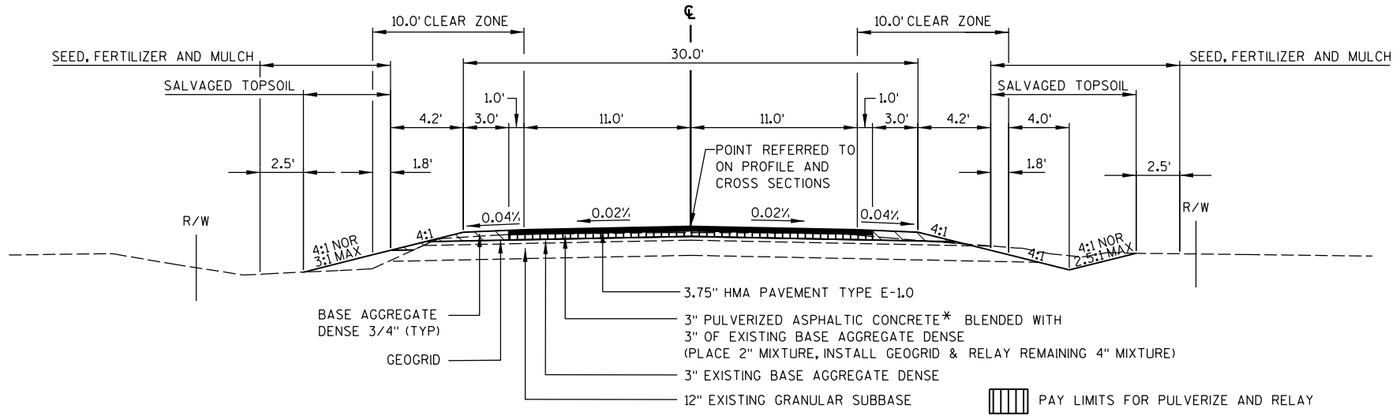

TYPICAL FINISHED SECTION

CTH D
STA 147+00.00 TO STA 149+00.00
STA 227+00.00 TO STA 246+00.00
STA 253+50.00 TO STA 255+00.00
STA 267+50.00 TO STA 271+50.00
STA 276+00.00 TO STA 280+00.00
STA 287+00.00 TO STA 293+00.00
STA 357+00.00 TO STA 361+00.00

* MINIMUM PULVERIZING DEPTH TO BE 6"

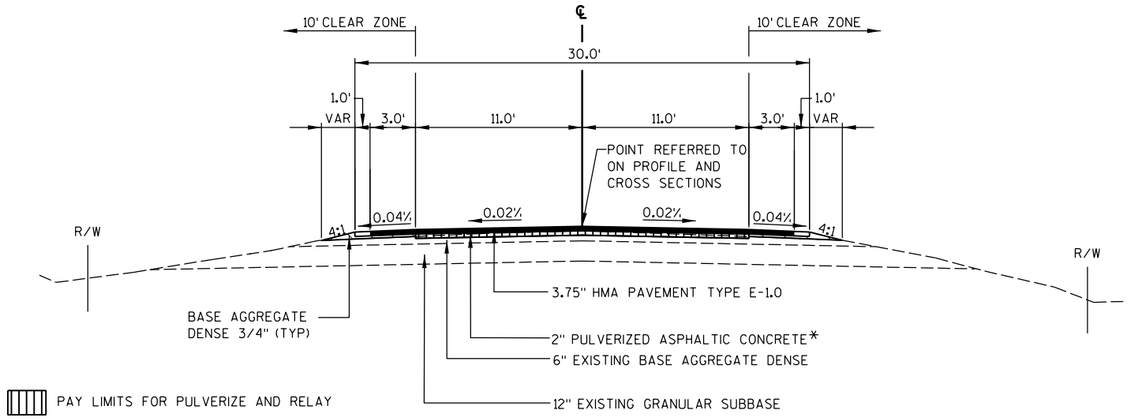

TYPICAL FINISHED SECTION

CTH D
STA 387+50.00 TO STA 419+73.85

* MINIMUM PULVERIZING DEPTH TO BE 6"

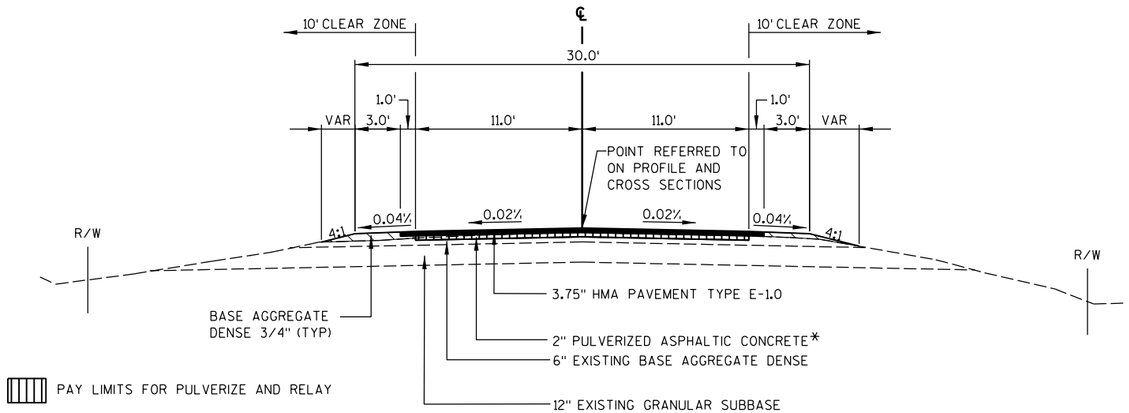

TYPICAL FINISHED SECTION

CTH D
STA 375+00.00 TO STA 387+50.00

* MINIMUM PULVERIZING DEPTH TO BE 6"

CTH D SuperElevation Transition Points

Station	Type	Left	Right	ShoulderLeft	ShoulderRight
110+80.17	Sh_End NC	-0.020000	-0.020000	-0.040000	-0.040000
111+18.42	End NC	-0.020000	-0.020000	-0.020000	-0.040000
111+56.67	Zero Super	0.000000	-0.020000	0.000000	-0.040000
111+94.92	Rev. Crown	0.020000	-0.020000	0.020000	-0.040000
112+33.17	Sh. Trans.	0.040000	-0.040000	0.040000	-0.040000
112+71.42	Begin FS	0.060000	-0.060000	0.060000	-0.060000
117+94.99	End FS	0.060000	-0.060000	0.060000	-0.060000
120+62.02	Begin FS	-0.060000	0.060000	-0.060000	0.060000
126+26.18	End FS	-0.060000	0.060000	-0.060000	0.060000
128+98.61	Begin FS	0.023252	-0.023252	0.023252	-0.040000
132+34.49	End FS	0.023252	-0.023252	0.023252	-0.040000
132+38.96	Rev. Crown	0.020000	-0.020000	0.020000	-0.040000
132+66.48	Zero Super	0.000000	-0.020000	0.000000	-0.040000
132+93.99	Begin NC	-0.020000	-0.020000	-0.020000	-0.040000
133+21.51	Sh_Begin NC	-0.020000	-0.020000	-0.040000	-0.040000
139+21.38	Sh_End NC	-0.020000	-0.020000	-0.040000	-0.040000
140+20.46	End NC	-0.020000	-0.020000	-0.040000	-0.020000
141+19.54	Zero Super	-0.020000	0.000000	-0.040000	0.000000
141+73.46	Begin FS	-0.010885	0.010885	-0.040000	0.010885
143+42.14	End FS	-0.010885	0.010885	-0.040000	0.010885
143+96.07	Zero Super	-0.020000	0.000000	-0.040000	0.000000
144+95.14	Begin NC	-0.020000	-0.020000	-0.040000	-0.020000
145+94.22	Sh_Begin NC	-0.020000	-0.020000	-0.040000	-0.040000
256+53.77	Sh_End NC	-0.020000	-0.020000	-0.040000	-0.040000
256+92.02	End NC	-0.020000	-0.020000	-0.020000	-0.040000
257+30.27	Zero Super	0.000000	-0.020000	0.000000	-0.040000
257+68.52	Rev. Crown	0.020000	-0.020000	0.020000	-0.040000
258+06.77	Sh. Trans.	0.040000	-0.040000	0.040000	-0.040000
258+45.02	Begin FS	0.060000	-0.060000	0.060000	-0.060000
265+33.76	End FS	0.060000	-0.060000	0.060000	-0.060000
265+72.01	Sh. Trans.	0.040000	-0.040000	0.040000	-0.040000
266+10.26	Rev. Crown	0.020000	-0.020000	0.020000	-0.040000
266+48.51	Zero Super	0.000000	-0.020000	0.000000	-0.040000
266+86.76	Begin NC	-0.020000	-0.020000	-0.020000	-0.040000
267+25.01	Sh_Begin NC	-0.020000	-0.020000	-0.040000	-0.040000
268+60.36	Sh_End NC	-0.020000	-0.020000	-0.040000	-0.040000
268+98.61	End NC	-0.020000	-0.020000	-0.040000	-0.020000
269+36.86	Zero Super	-0.020000	0.000000	-0.040000	0.000000
269+75.11	Rev. Crown	-0.020000	0.020000	-0.040000	0.020000
270+13.36	Sh. Trans.	-0.040000	0.040000	-0.040000	0.040000
270+51.61	Begin FS	-0.060000	0.060000	-0.060000	0.060000
274+66.44	End FS	-0.060000	0.060000	-0.060000	0.060000
275+04.69	Sh. Trans.	-0.040000	0.040000	-0.040000	0.040000
275+42.94	Rev. Crown	-0.020000	0.020000	-0.040000	0.020000
275+81.19	Zero Super	-0.020000	0.000000	-0.040000	0.000000
276+19.44	Begin NC	-0.020000	-0.020000	-0.040000	-0.020000

CTH D SuperElevation Transition Points (Continued)

Station	Type	Left	Right	ShoulderLeft	ShoulderRight
276+57.69	Sh_Begin NC	-0.020000	-0.020000	-0.040000	-0.040000
282+13.77	Sh_End NC	-0.020000	-0.020000	-0.040000	-0.040000
282+50.48	End NC	-0.020000	-0.020000	-0.040000	-0.020000
282+87.20	Zero Super	-0.020000	0.000000	-0.040000	0.000000
283+23.91	Rev. Crown	-0.020000	0.020000	-0.040000	0.020000
283+60.62	Sh. Trans.	-0.040000	0.040000	-0.040000	0.040000
283+81.34	Begin FS	-0.051288	0.051286	-0.051286	0.051286
290+06.90	End FS	-0.051288	0.051286	-0.051286	0.051286
292+46.00	Begin FS	0.060000	-0.060000	0.060000	-0.060000
296+70.50	End FS	0.060000	-0.060000	0.060000	-0.060000
298+64.97	Begin FS	0.042900	-0.042900	0.042900	-0.042900
299+42.54	End FS	0.042900	-0.042900	0.042900	-0.042900
300+97.29	Begin FS	0.060000	-0.060000	0.060000	-0.060000
305+22.44	End FS	0.060000	-0.060000	0.060000	-0.060000
308+25.26	Begin FS	-0.060000	0.060000	-0.060000	0.060000
318+27.04	End FS	-0.060000	0.060000	-0.060000	0.060000
318+65.29	Sh. Trans.	-0.040000	0.040000	-0.040000	0.040000
319+03.54	Rev. Crown	-0.020000	0.020000	-0.040000	0.020000
319+41.79	Zero Super	-0.020000	0.000000	-0.040000	0.000000
319+80.04	Begin NC	-0.020000	-0.020000	-0.040000	-0.020000
320+18.29	Sh_Begin NC	-0.020000	-0.020000	-0.040000	-0.040000
322+55.05	Sh_End NC	-0.020000	-0.020000	-0.040000	-0.040000
322+91.54	End NC	-0.020000	-0.020000	-0.020000	-0.040000
323+28.03	Zero Super	0.000000	-0.020000	0.000000	-0.040000
323+64.51	Rev. Crown	0.020000	-0.020000	0.020000	-0.040000
324+01.00	Sh. Trans.	0.040000	-0.040000	0.040000	-0.040000
324+18.79	Begin FS	0.049752	-0.049752	0.049752	-0.049752
345+31.93	End FS	0.049752	-0.049752	0.049752	-0.049752
346+19.92	Begin FS	0.053550	-0.053550	0.053550	-0.053550
354+54.53	End FS	0.053550	-0.053550	0.053550	-0.053550
354+79.71	Sh. Trans.	0.040000	-0.040000	0.040000	-0.040000
355+16.86	Rev. Crown	0.020000	-0.020000	0.020000	-0.040000
355+54.02	Zero Super	0.000000	-0.020000	0.000000	-0.040000
355+91.18	Begin NC	-0.020000	-0.020000	-0.020000	-0.040000
356+28.34	Sh_Begin NC	-0.020000	-0.020000	-0.040000	-0.040000
361+62.26	Sh_End NC	-0.020000	-0.020000	-0.040000	-0.040000
361+96.21	End NC	-0.020000	-0.020000	-0.040000	-0.020000
362+30.15	Zero Super	-0.020000	0.000000	-0.040000	0.000000
362+64.10	Rev. Crown	-0.020000	0.020000	-0.040000	0.020000
362+97.21	Begin FS	-0.039500	0.039500	-0.040000	0.039500
365+47.04	End FS	-0.039500	0.039500	-0.040000	0.039500
365+80.14	Rev. Crown	-0.020000	0.020000	-0.040000	0.020000
366+14.09	Zero Super	-0.020000	0.000000	-0.040000	0.000000
366+48.04	Begin NC	-0.020000	-0.020000	-0.040000	-0.020000
366+81.99	Sh_Begin NC	-0.020000	-0.020000	-0.040000	-0.040000

WEDGING TABLE

Station	Change in LT Super Elev. (FT\FT)	Change in RT Super Elev. (FT\FT)
115+49.38	+0.018	-0.018
123+63.80	-0.018	+0.018
130+66.62	+0.044	-0.004
142+57.81	no change	+0.040
262+25.07	-0.001	+0.001
272+67.97	+0.048	+0.001
286+98.85	+0.056	+0.012
294+69.78	+0.008	+0.051
299+03.78	+0.023	+0.015
303+19.38	+0.022	+0.038
314+28.43	+0.036	+0.013
336+15.22	+0.014	+0.046
350+49.97	+0.036	+0.018
364+22.28	+0.006	+0.056

2

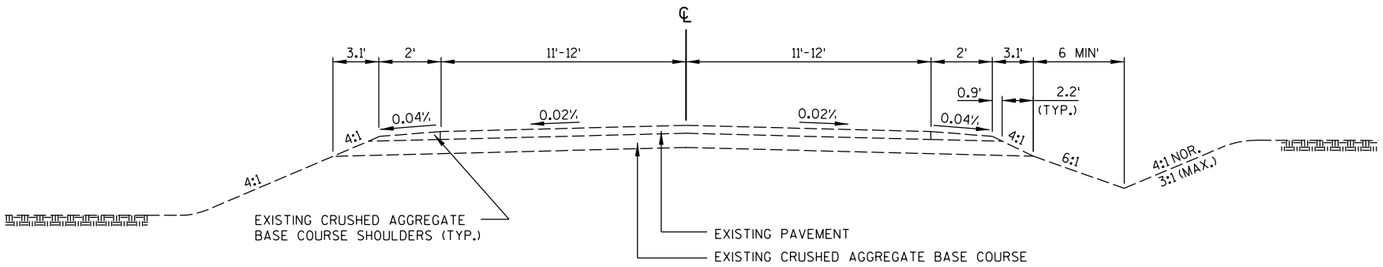

TYPICAL EXISTING SIDEROAD SECTION

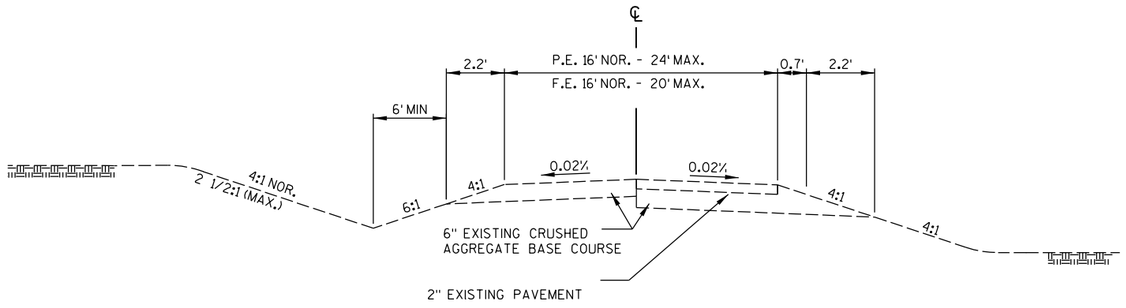

TYPICAL EXISTING P.E. SECTION

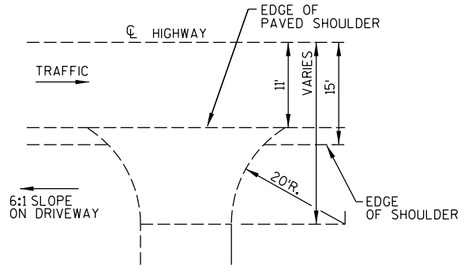

PLAN VIEW
(PAVED SHOULDER ON HIGHWAY)

EXISTING RURAL DRIVEWAY INTERSECTION DETAIL

2

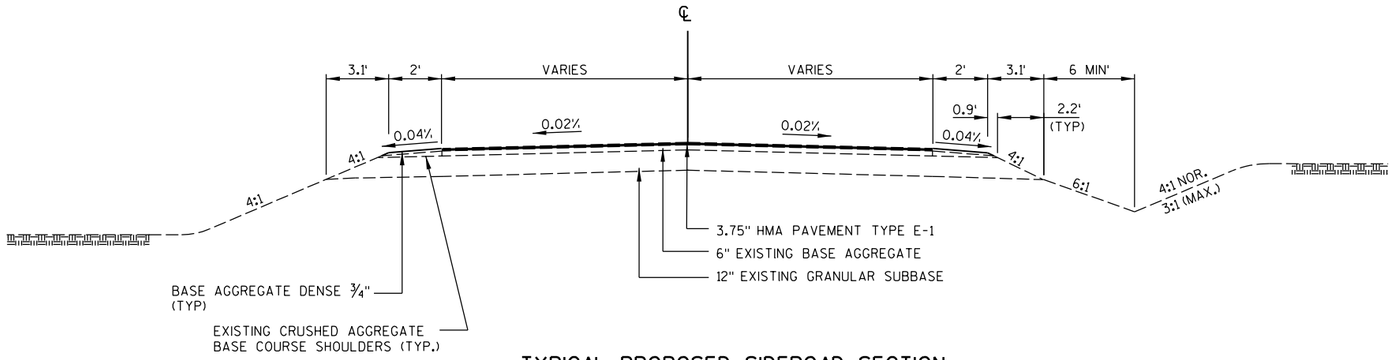

TYPICAL PROPOSED SIDEROAD SECTION

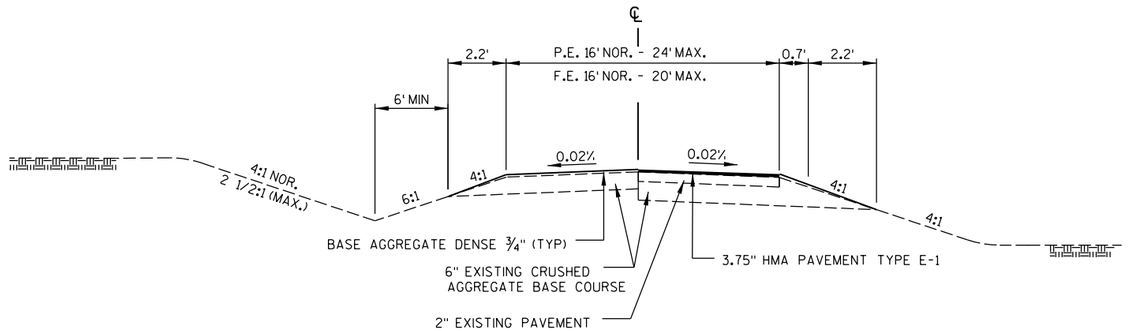

TYPICAL PROPOSED P.E. SECTION

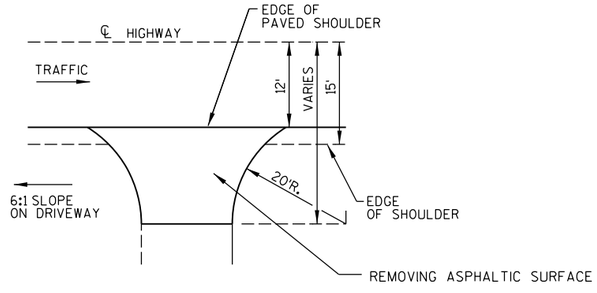

PLAN VIEW

(PAVED SHOULDER ON HIGHWAY)

PROPOSED RURAL DRIVEWAY INTERSECTION DETAIL

2

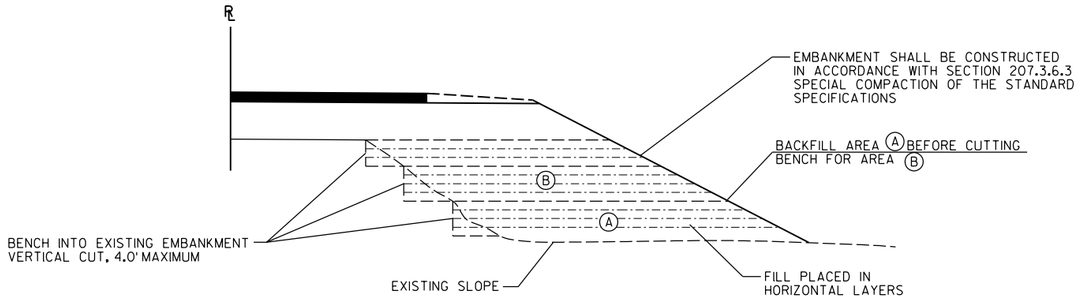

DETAIL SHOWING METHOD FOR BENCHING FILL INTO EXISTING EMBANKMENT

STA 186+00 TO STA 191+00, LT
STA 196+00 TO STA 197+00, LT & RT
STA 201+00 TO STA 207+00, LT & RT
STA 209+00 TO STA 213+00, LT & RT
STA 218+00 TO STA 219+00, LT & RT
STA 223+00 TO STA 224+00, LT & RT
STA 229+00 TO STA 231+00, LT & RT

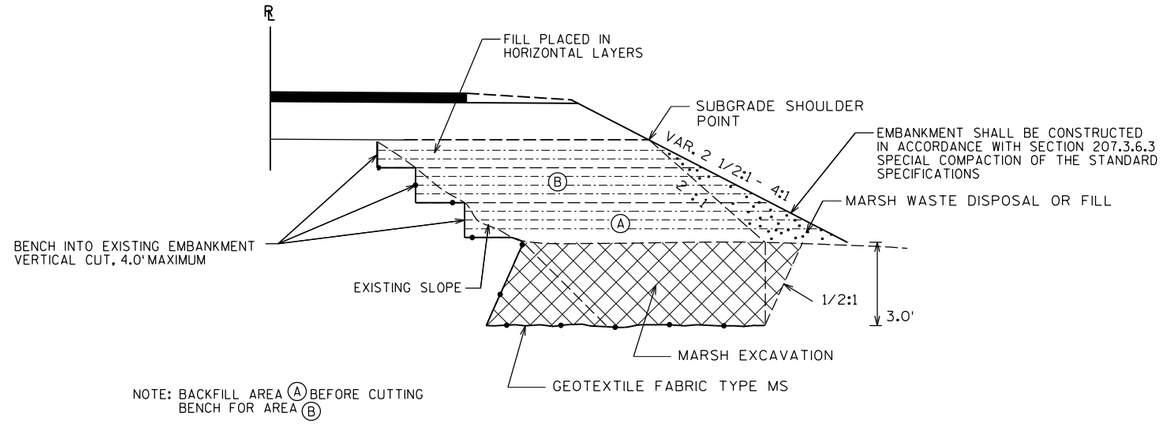

NOTE: BACKFILL AREA (A) BEFORE CUTTING BENCH FOR AREA (B)

DETAIL SHOWING MARSH EXCAVATION FOR RECONSTRUCTION & METHOD FOR BENCHING FILL INTO EXISTING EMBANKMENT

STA 179+50 TO STA 182+00 RT & LT
STA 185+00 TO STA 191+50 LT
STA 186+50 TO STA 191+00 RT
STA 196+00 TO STA 197+50 LT
STA 200+50 TO STA 207+00 LT
STA 200+50 TO STA 207+50 RT
STA 208+50 TO STA 213+50 RT
STA 210+25 TO STA 213+50 LT
STA 222+50 TO STA 224+50 LT
STA 228+50 TO STA 231+00 RT & LT

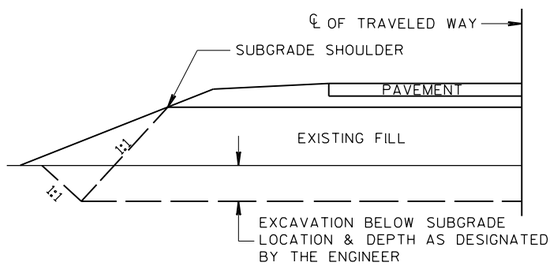

DETAIL FOR EXCAVATION BELOW SUBGRADE

STA 100+17.67 TO STA 111+00

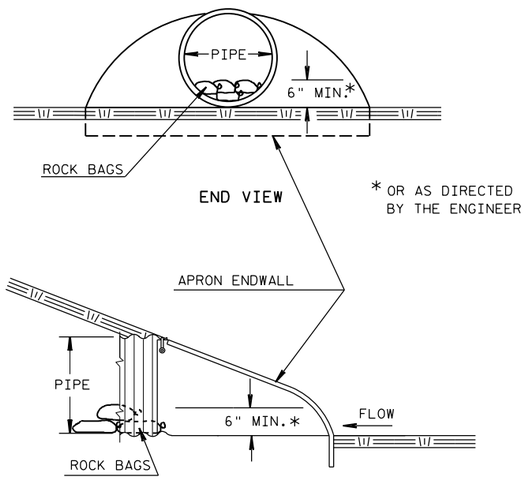

CULVERT PIPE CHECK

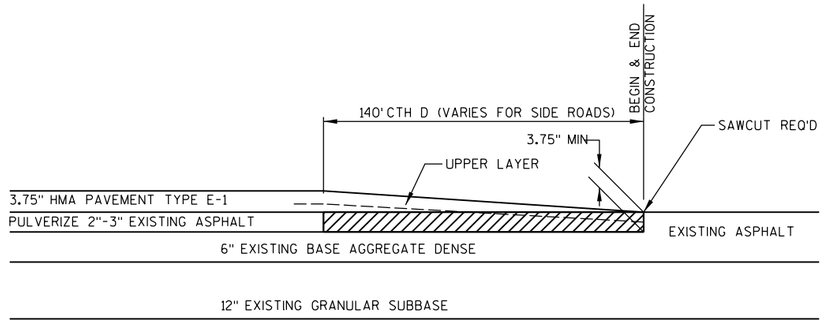

REMOVING ASPHALTIC SURFACE BUTT JOINTS

DETAIL OF BUTTED JOINT

OLD DR 13
WALTERS LANE
HARPER DRIVE
NORTH STREET
STA 419+73.85

PROJECT NO: 8900-06-76	HWY: CTH D	COUNTY: TAYLOR	CONSTRUCITON DETAILS	SHEET 8	E

BEGIN PROJECT
STA 100+62.92
Y = 417,606.982
X = 661,992.850
MATCH EXISTING
SAWCUT REQ'D

BUS HWY 13

PINE LINE TRAIL

TYPE SS WETLAND

LEONARD LANE

SLOPE INTERCEPT

R/W

100+00E

S 89°13'35" E

N 89°24'24" E

105+00E

C.T.H. D

105+00A
N 2°48'28" E

N 89°34'01" E

110+00E

R/W

MATCHLINE STA 114+00

N

TYPE SS WETLAND

MATCHLINE STA 114+00

115+00E

C.T.H. D

SLOPE INTERCEPT

SILVER CREEK

S 46°38'29" E

120+00E

MATCHLINE STA 128+00

N 86°43'33" E

125+00E

TYPE SS WETLAND

125+00B

OLD 13 ROAD

SLOPE INTERCEPT

N

LEGEND

- EROSION MAT URBAN CLASS I TYPE B
- RIPRAP LIGHT WITH GEOTEXTILE FABRIC TYPE R (TYP)
- SILT FENCE
- DRAINAGE ARROW
- TEMPORARY DITCH CHECKS
- CULVERT PIPE CHECKS
- TURBIDITY BARRIER

PROJECT NO: 8900-06-76	HWY: CTH D	COUNTY: TAYLOR	EROSION CONTROL	SHEET 9	E

FILE NAME : P:\PT\T\Tayhd\108326\CAD\ECTAYD01.dgn PLOT TIME : 10:44:56 AM PLOT DATE : 3/5/2013 PLOT BY : SEH PLOT NAME : PLOT SCALE : N/A

WISDOT/CADDS SHEET 42

2

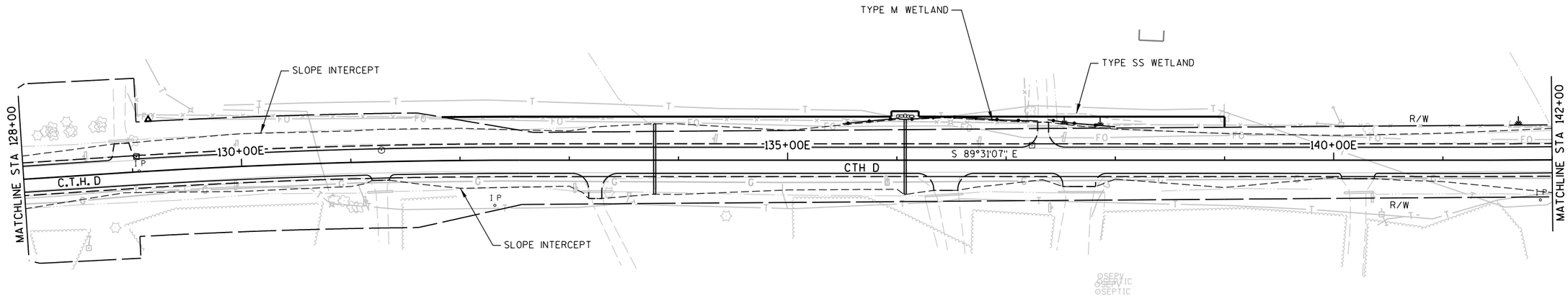

LEGEND

- EROSION MAT URBAN CLASS I TYPE B
- RIPRAP LIGHT WITH GEOTEXTILE FABRIC TYPE R (TYP)
- SILT FENCE
- DRAINAGE ARROW
- TEMPORARY DITCH CHECKS
- CULVERT PIPE CHECKS
- TURBIDITY BARRIER

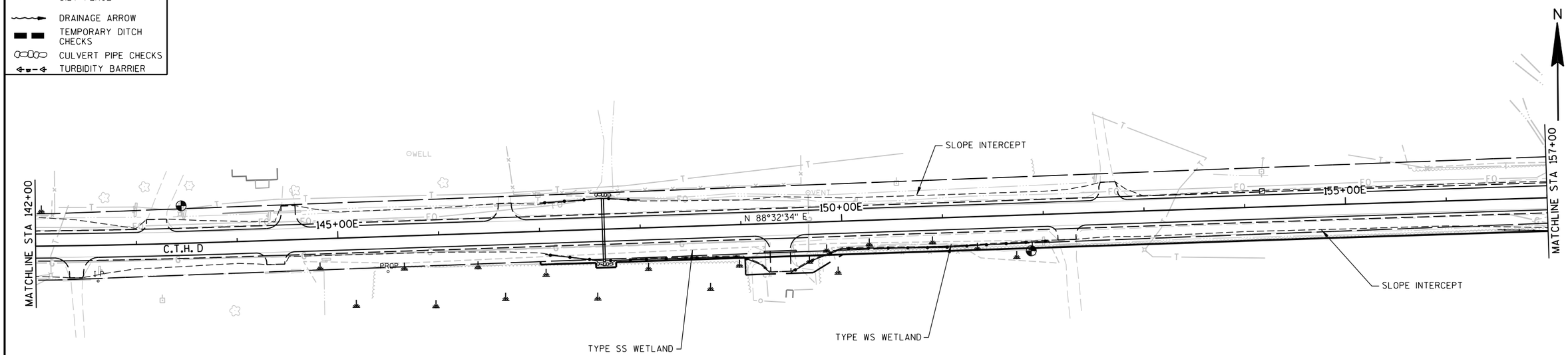

PROJECT NO: 8900-06-76	HWY: CTH D	COUNTY: TAYLOR	EROSION CONTROL	SHEET 10	E

FILE NAME : P:\PT\T\Tayhd\108326\CAD\ECTAYD02.dgn PLOT TIME : 10:44:57 AM PLOT DATE : 3/5/2013 PLOT BY : SEH PLOT NAME : PLOT SCALE : N/A

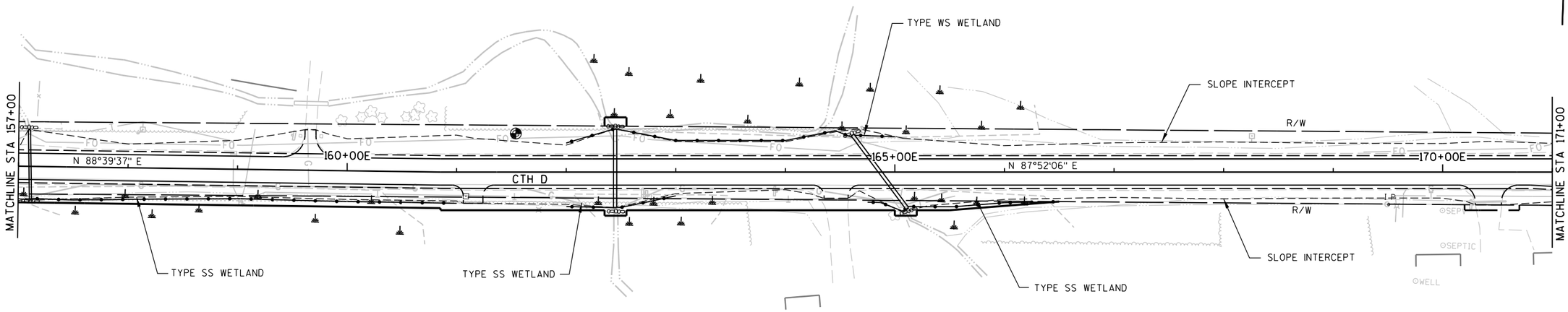

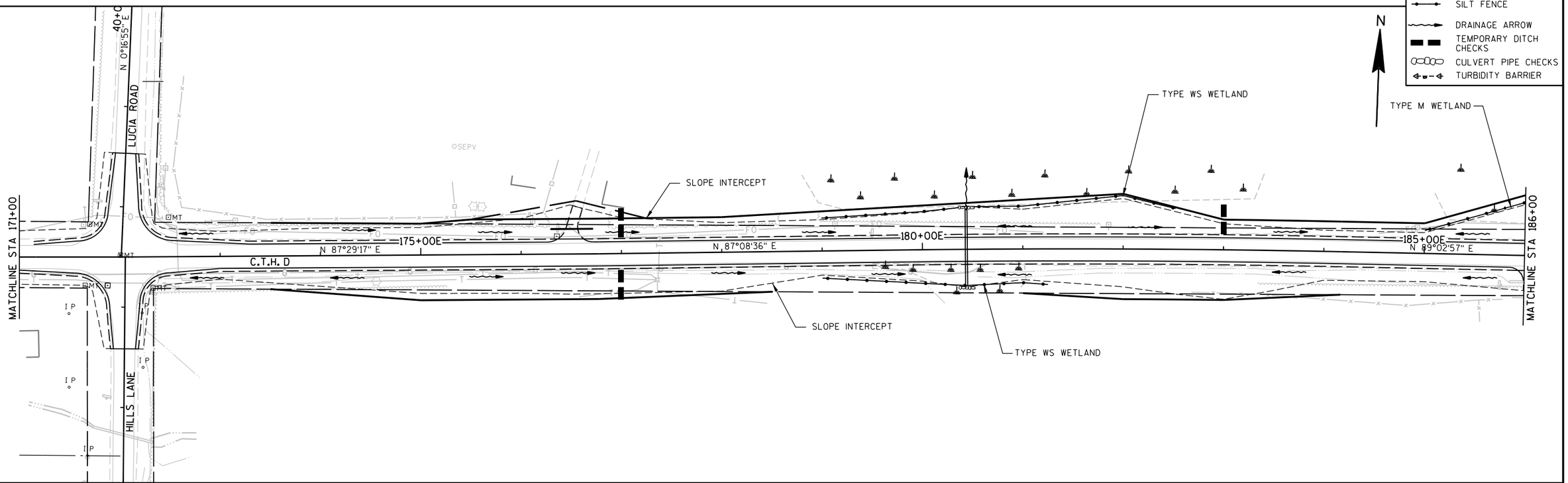

PROJECT NO: 8900-06-76	HWY: CTH D	COUNTY: TAYLOR	EROSION CONTROL	SHEET 11	E

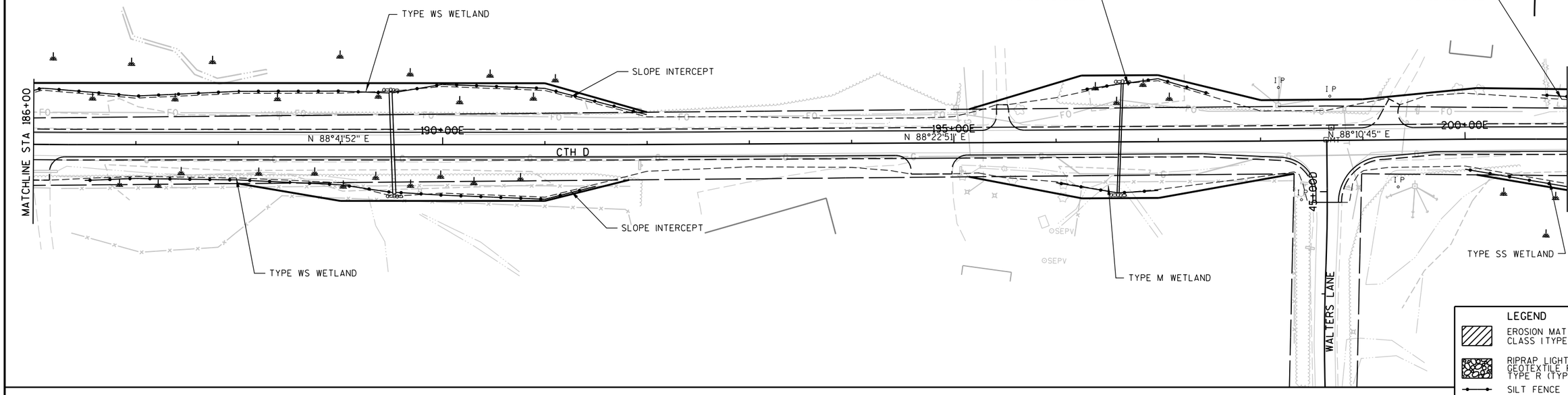

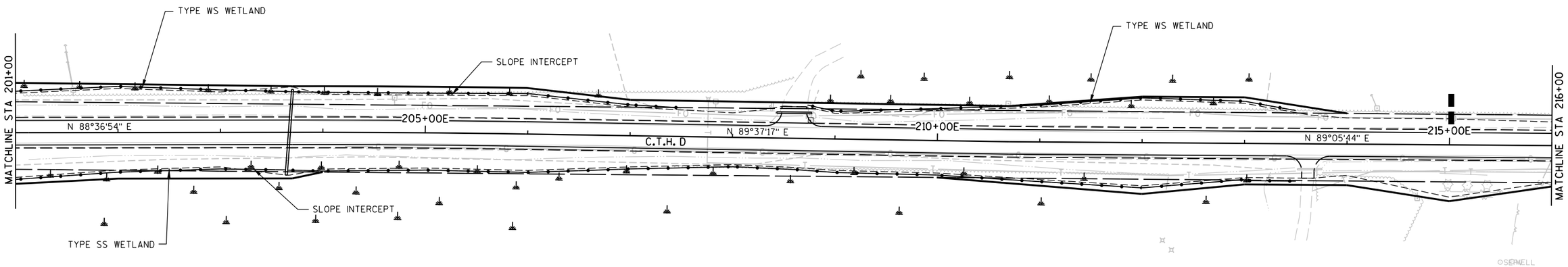

N

LEGEND

- EROSION MAT URBAN CLASS I TYPE B
- RIPRAP LIGHT WITH GEOTEXTILE FABRIC TYPE R (TYP)
- SILT FENCE
- DRAINAGE ARROW
- TEMPORARY DITCH CHECKS
- CULVERT PIPE CHECKS
- TURBIDITY BARRIER

PROJECT NO: 8900-06-76	HWY: CTH D	COUNTY: TAYLOR	EROSION CONTROL	SHEET 12	E

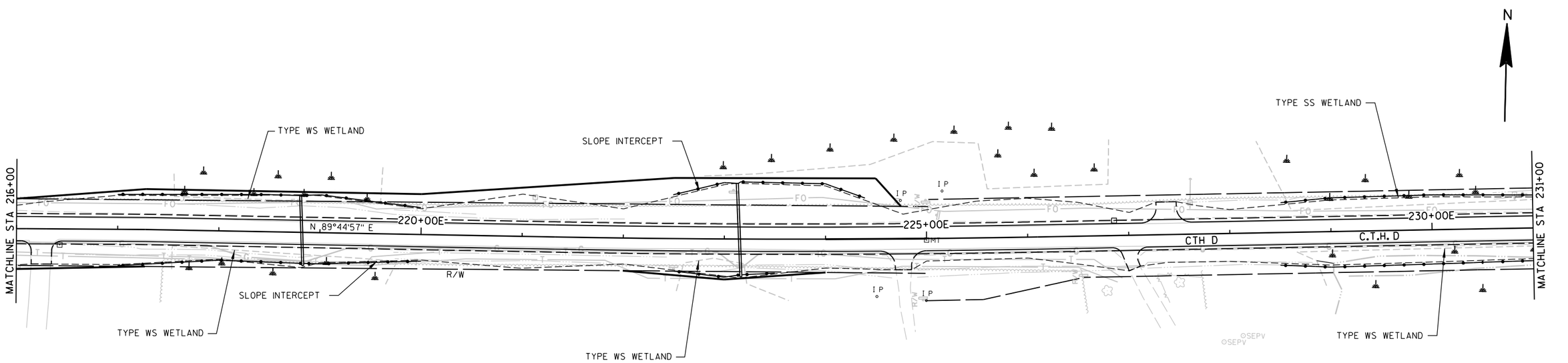

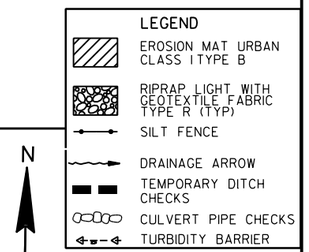

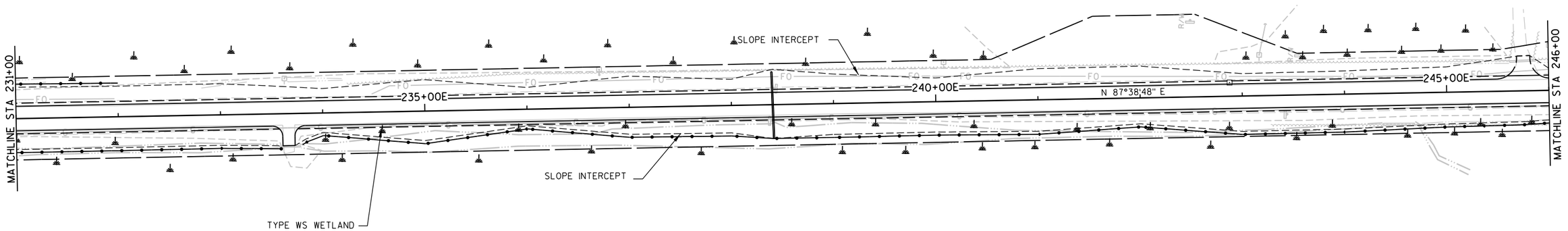

PROJECT NO: 8900-06-76	HWY: CTH D	COUNTY: TAYLOR	EROSION CONTROL	SHEET 13	E

FILE NAME : P:\PT\T\Tayhd\108326\CAD\ECTAYD05.dgn PLOT TIME : 10:44:59 AM PLOT DATE : 3/5/2013 PLOT BY : SEH PLOT NAME : PLOT SCALE : N/A

2

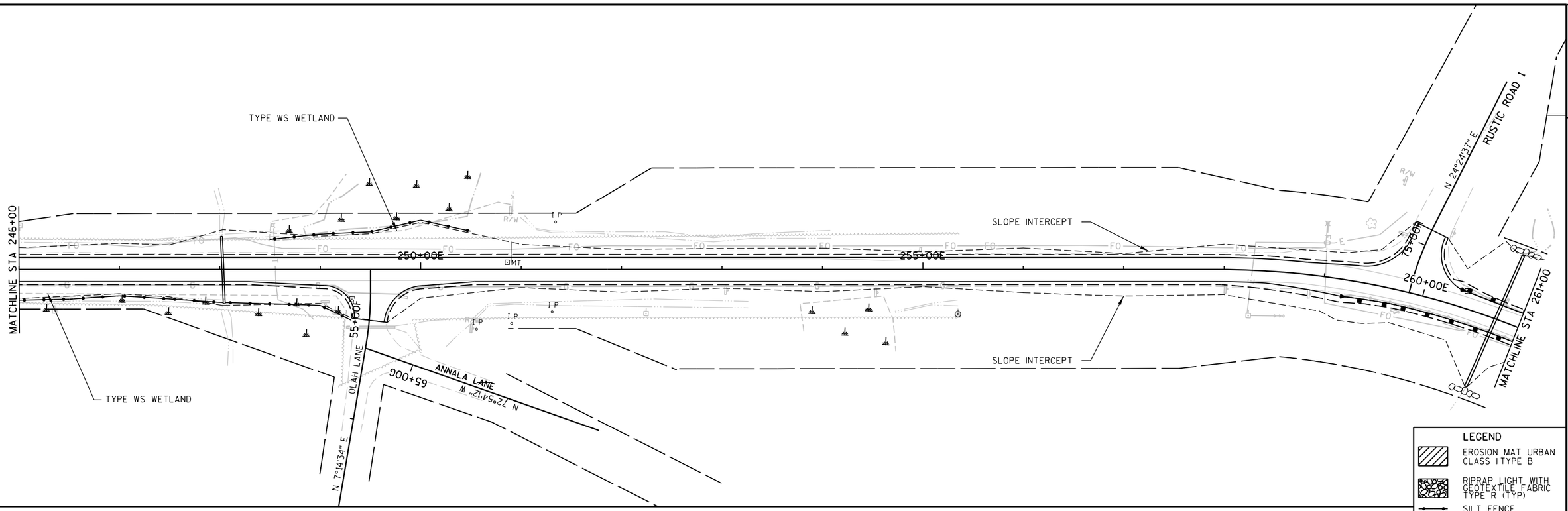

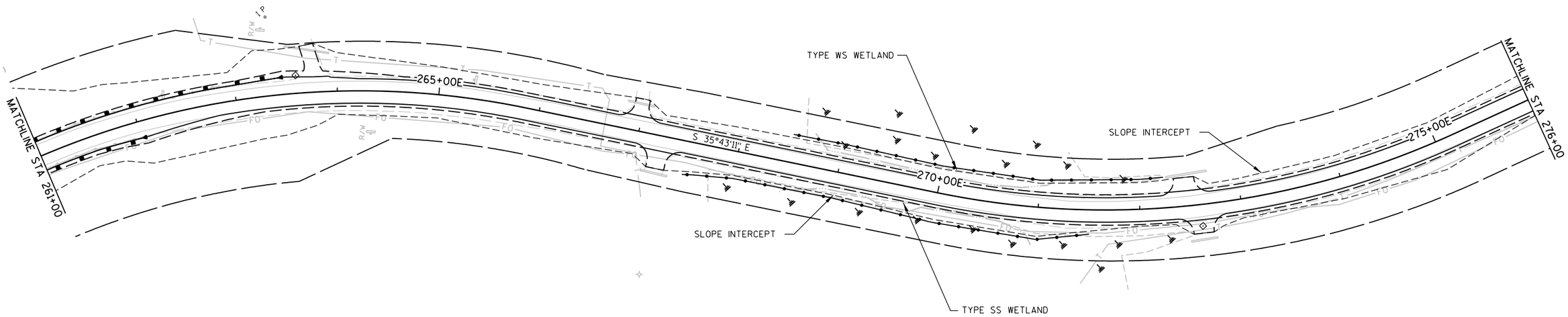

LEGEND

- EROSION MAT URBAN CLASS I TYPE B
- RIPRAP LIGHT WITH GEOTEXTILE FABRIC TYPE R (TYP)
- SILT FENCE
- DRAINAGE ARROW
- TEMPORARY DITCH CHECKS
- CULVERT PIPE CHECKS
- TURBIDITY BARRIER

PROJECT NO: 8900-06-76	HWY: CTH D	COUNTY: TAYLOR	EROSION CONTROL	SHEET 14	E

2

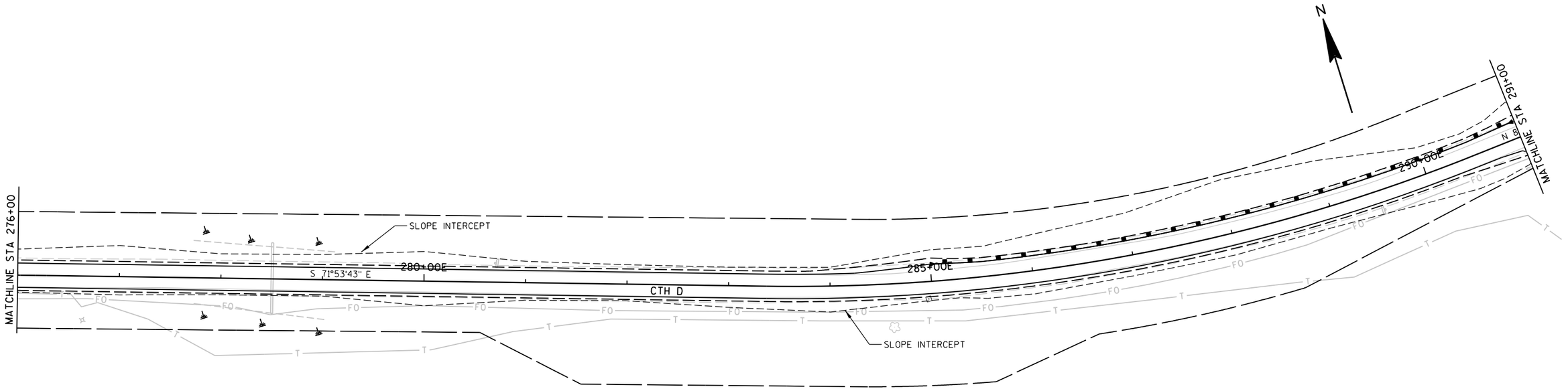

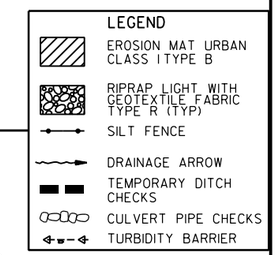

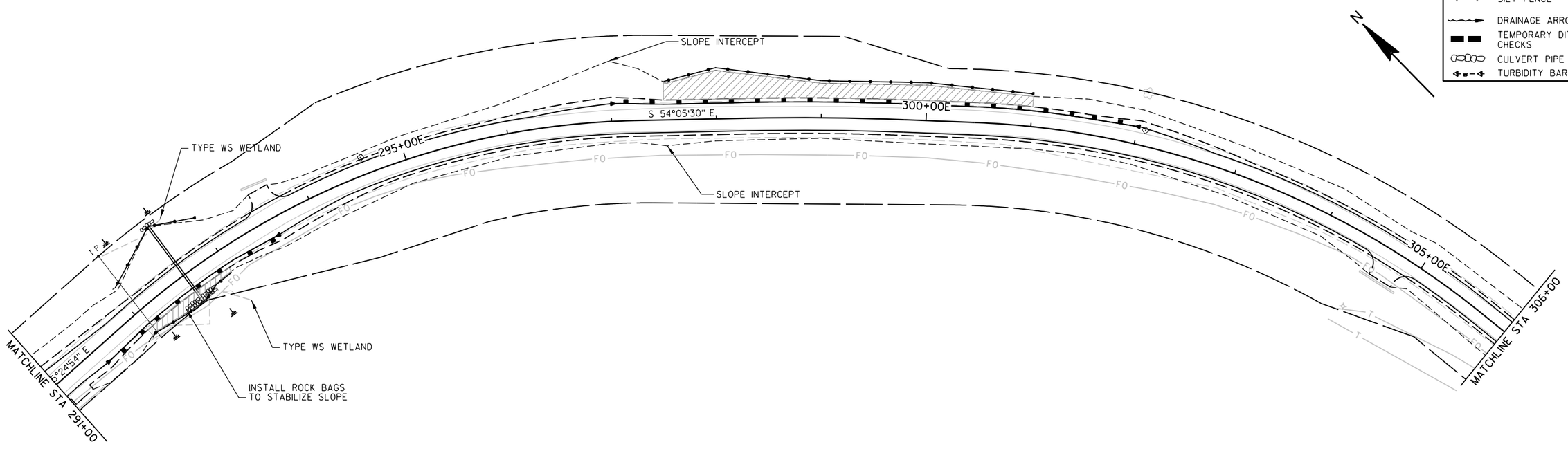

PROJECT NO: 8900-06-76	HWY: CTH D	COUNTY: TAYLOR	EROSION CONTROL	SHEET 15	E

2

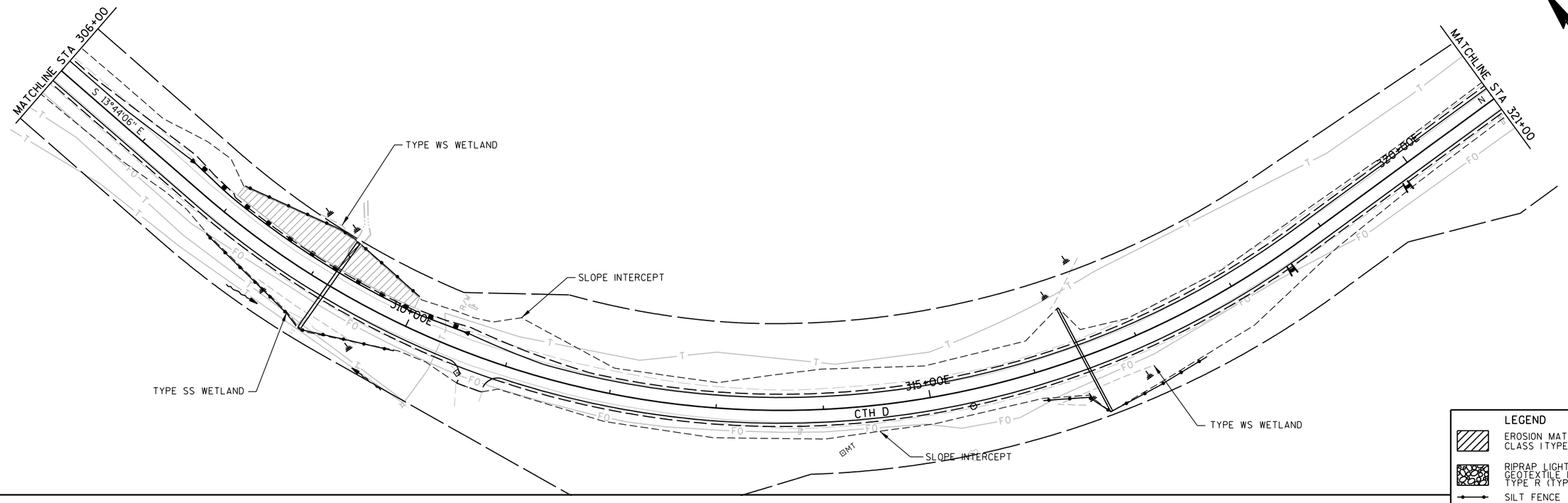

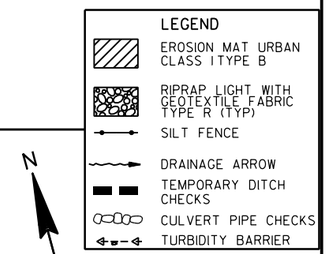

LEGEND

- EROSION MAT URBAN CLASS I TYPE B
- RIPRAP LIGHT WITH GEOTEXTILE FABRIC TYPE R (TYP)
- SILT FENCE
- DRAINAGE ARROW
- TEMPORARY DITCH CHECKS
- CULVERT PIPE CHECKS
- TURBIDITY BARRIER

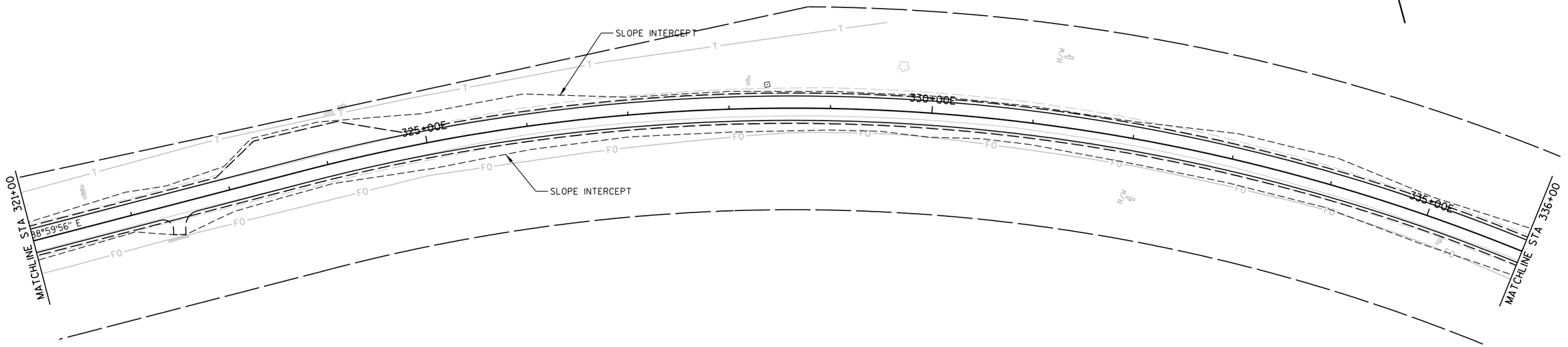

PROJECT NO: 8900-06-76	HWY: CTH D	COUNTY: TAYLOR	EROSION CONTROL	SHEET 16	E

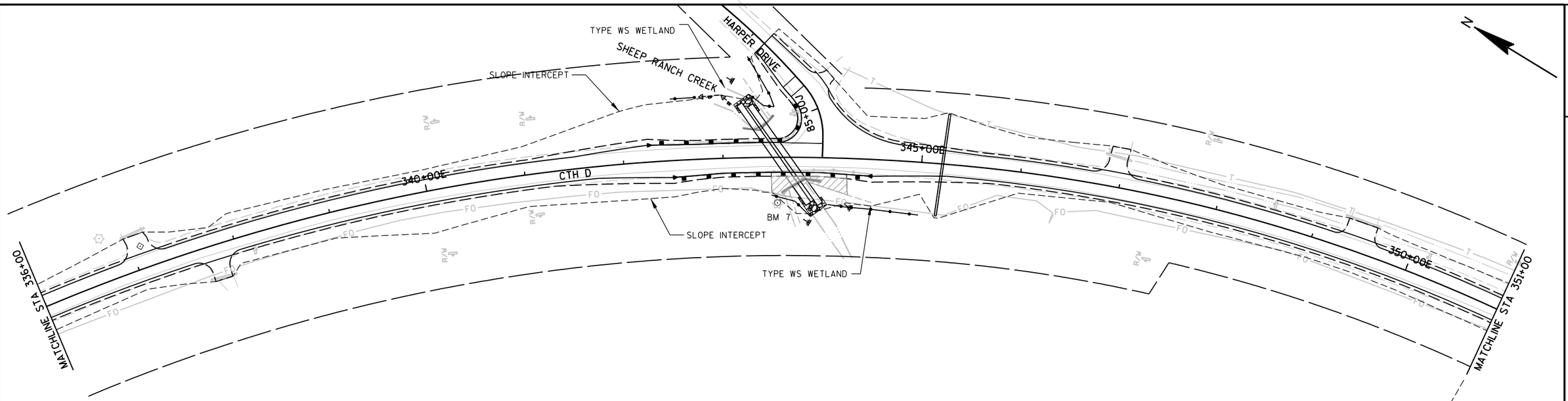

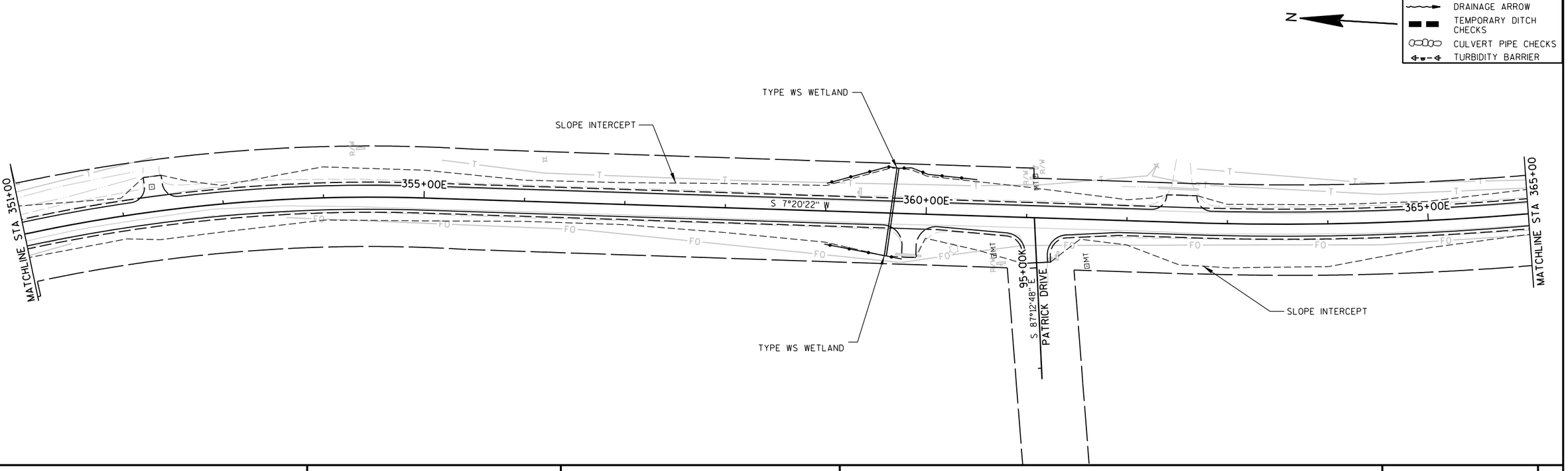

PROJECT NO: 8900-06-76	HWY: CTH D	COUNTY: TAYLOR	EROSION CONTROL	SHEET	E

FILE NAME : P:\PT\T\Tayhd\108326\CAD\ECTAYD09.dgn PLOT TIME : 10:45:01 AM PLOT DATE : 3/5/2013 PLOT BY : SEH PLOT NAME : PLOT SCALE : N/A

2

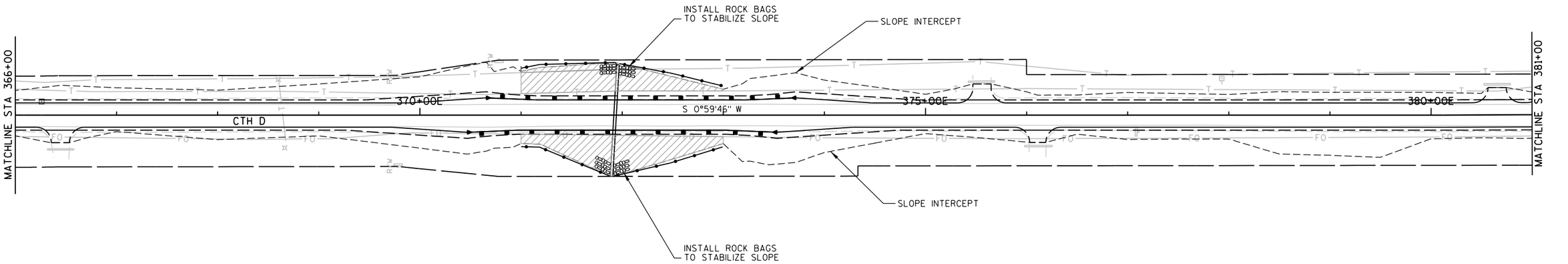

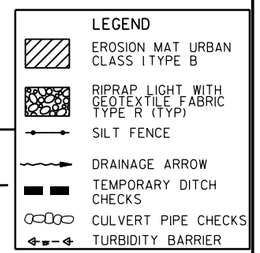

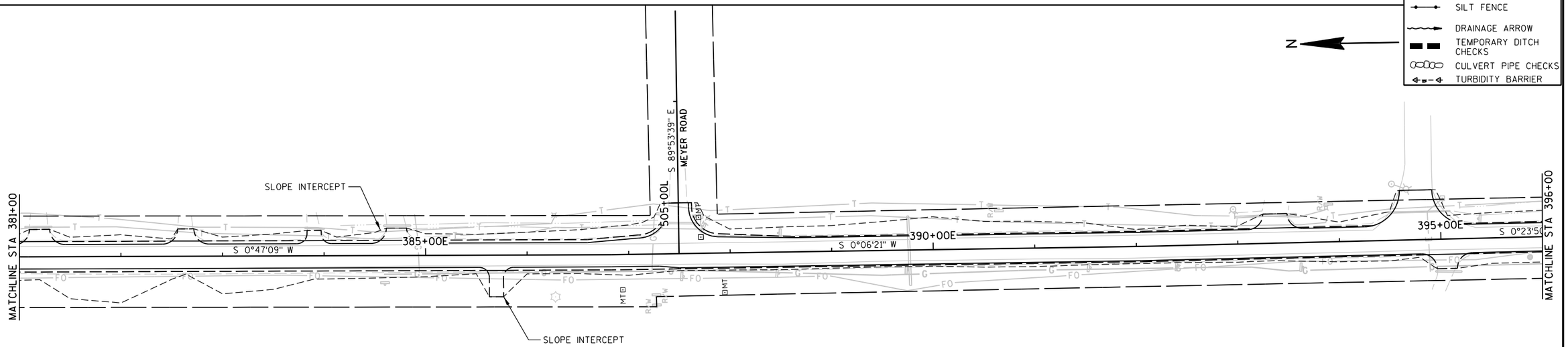

PROJECT NO: 8900-06-76	HWY: CTH D	COUNTY: TAYLOR	EROSION CONTROL	SHEET 18	E

2

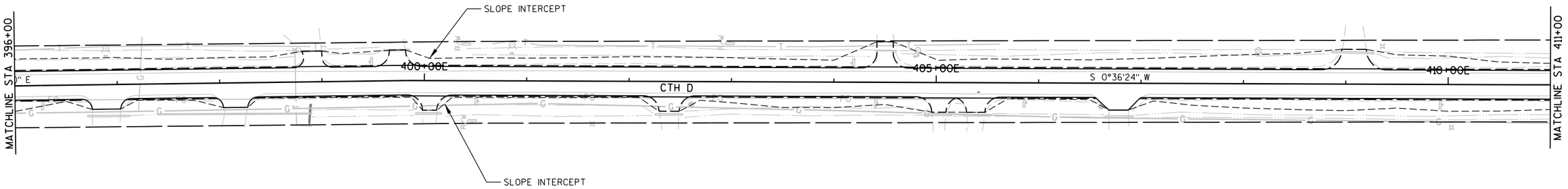

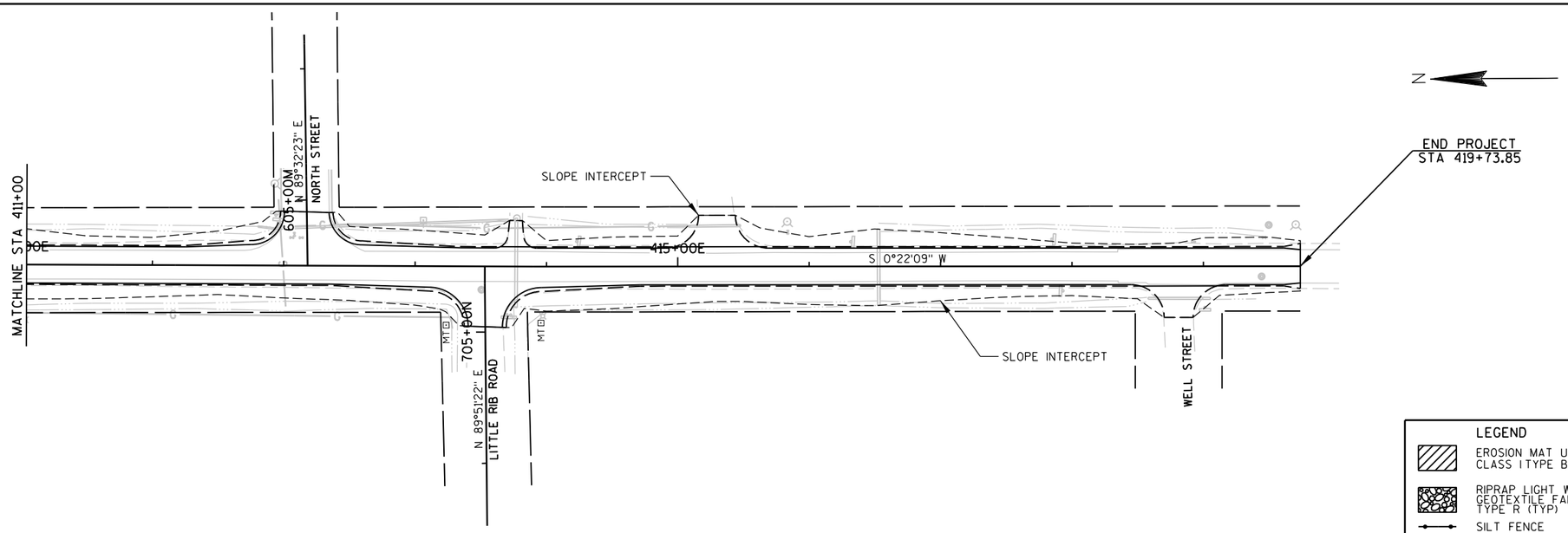

PROJECT NO: 8900-06-76	HWY: CTH D	COUNTY: TAYLOR	EROSION CONTROL	SHEET 19	E

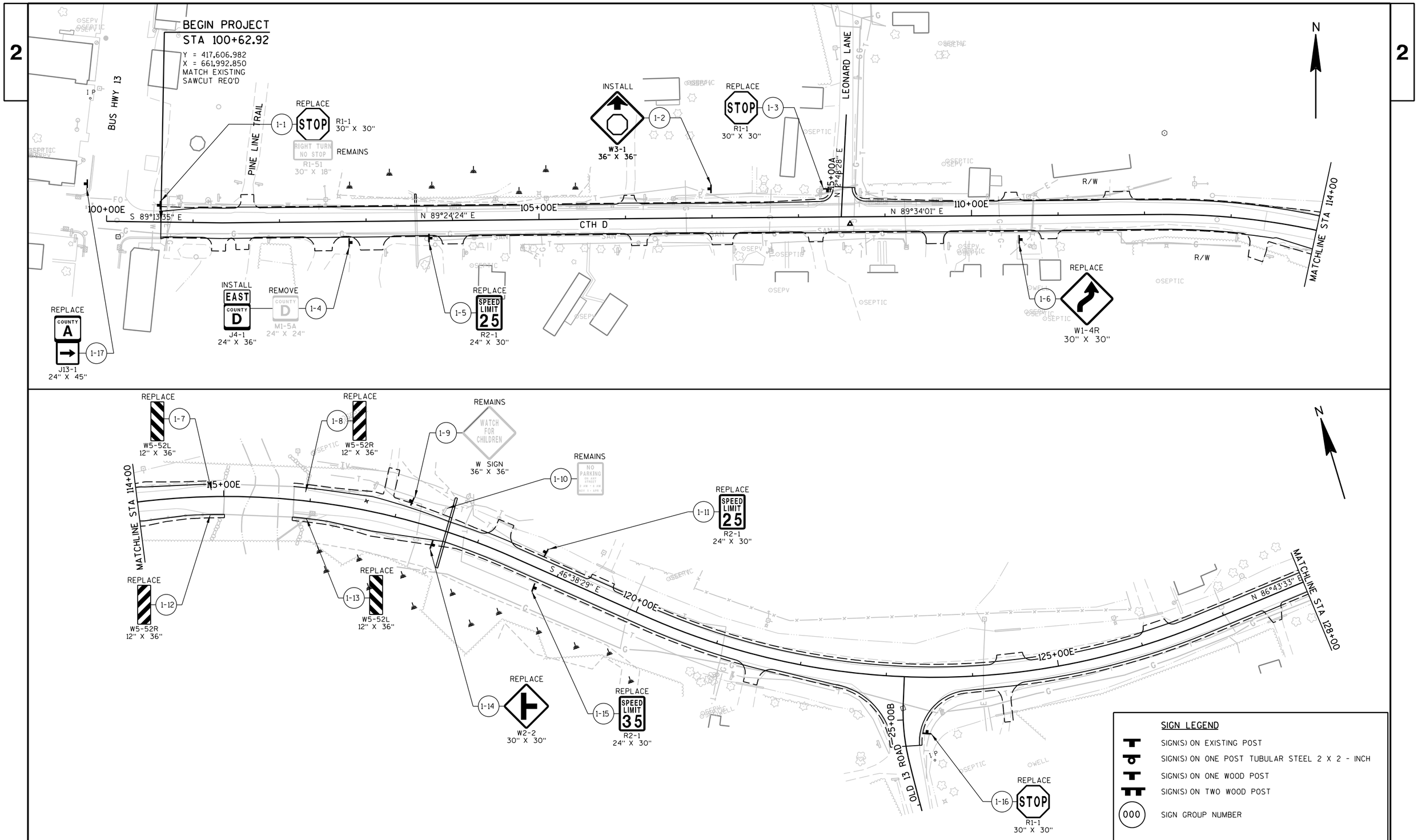

PROJECT NO:8900-06-76	HWY:CTH D	COUNTY:TAYLOR	PERMANENT SIGNING	SHEET 20	E

FILE NAME : P:\PT\T\Tayhd\108326\CAD\SNTAYD01.dgn PLOT TIME : 10:50:15 AM PLOT DATE : 1/30/2013 PLOT BY : SEH PLOT NAME : PLOT SCALE : N/A

WISDOT/CADDS SHEET 42

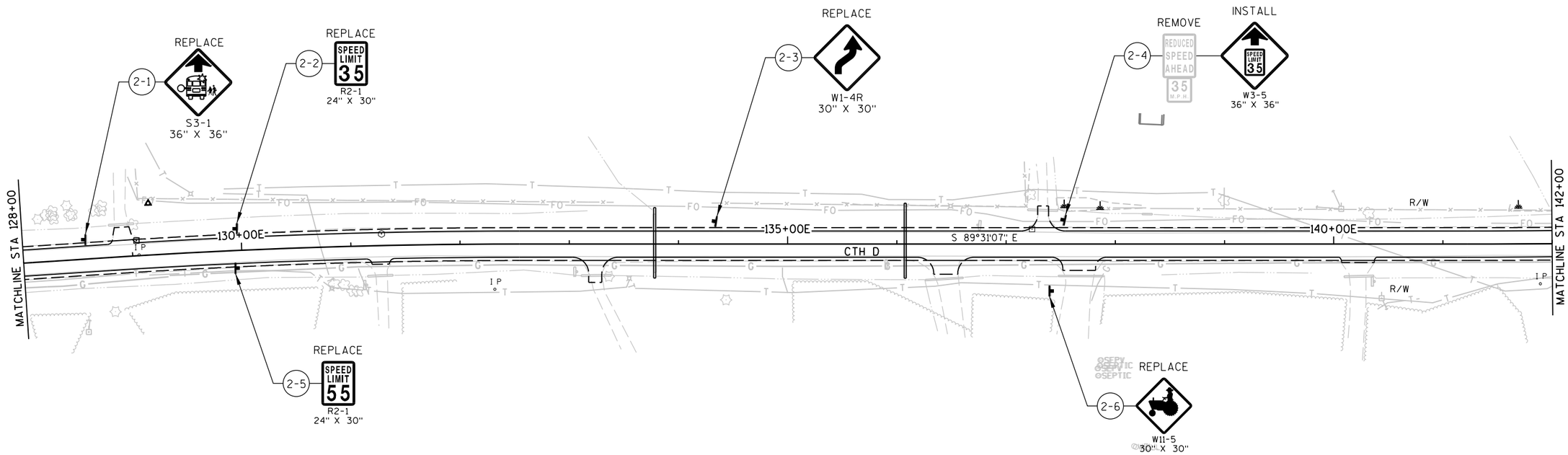

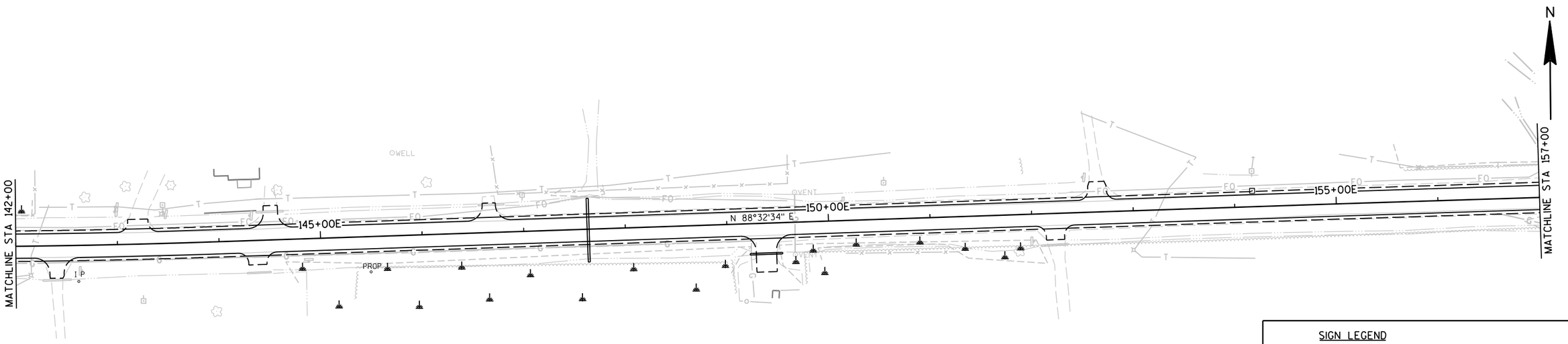

SIGN LEGEND

- SIGN(S) ON EXISTING POST
- SIGN(S) ON ONE POST TUBULAR STEEL 2 X 2 - INCH
- SIGN(S) ON ONE WOOD POST
- SIGN(S) ON TWO WOOD POST
- 000 SIGN GROUP NUMBER

PROJECT NO: 8900-06-76	HWY: CTH D	COUNTY: TAYLOR	PERMANENT SIGNING	SHEET 21	E

FILE NAME : P:\PT\T\Tayhd\108326\CAD\SNTAYD02.dgn PLOT TIME : 10:50:16 AM PLOT DATE : 1/30/2013 PLOT BY : SEH PLOT NAME : PLOT SCALE : N/A

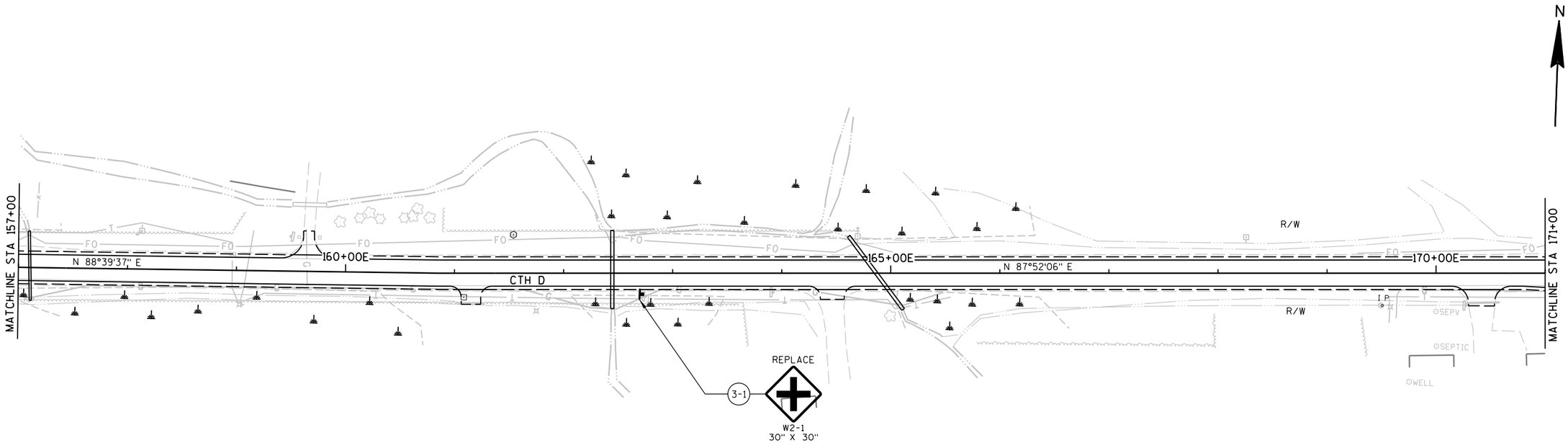

PROJECT NO: 8900-06-76	HWY: CTH D	COUNTY: TAYLOR	PERMANENT SIGNING	SHEET 22	E

FILE NAME : P:\PT\T\Tayhd\108326\CAD\SNTAYD03.dgn PLOT TIME : 10:50:16 AM PLOT DATE : 1/30/2013 PLOT BY : SEH PLOT NAME : PLOT SCALE : N/A

2

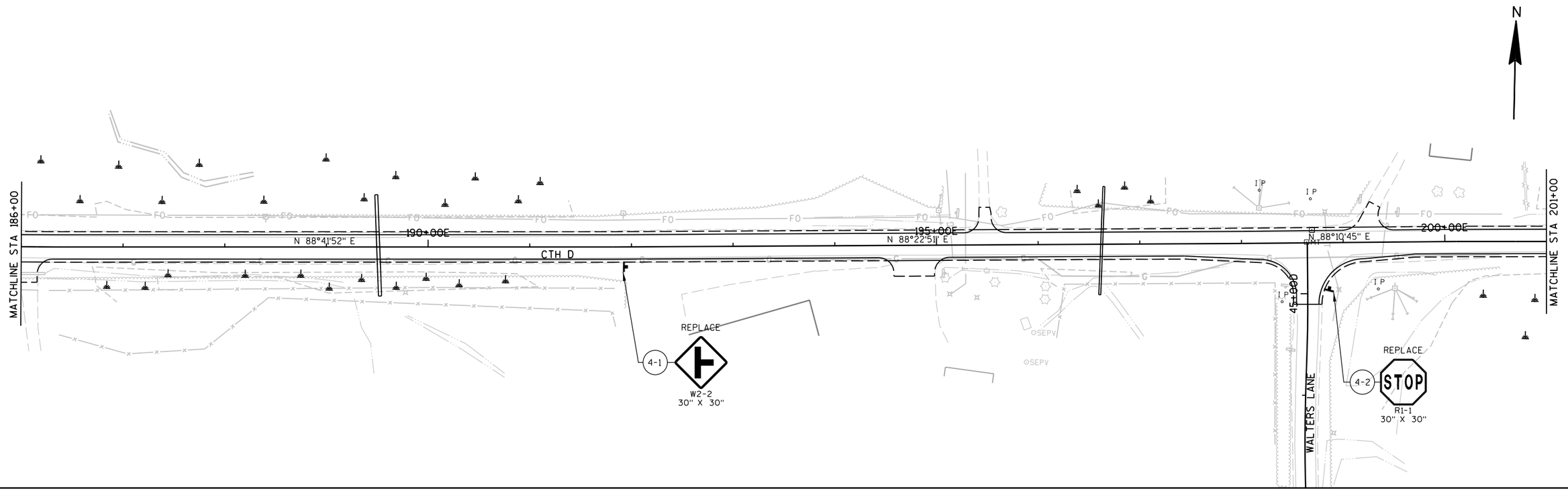

SIGN LEGEND

- SIGN(S) ON EXISTING POST
- SIGN(S) ON ONE POST TUBULAR STEEL 2 X 2 - INCH
- SIGN(S) ON ONE WOOD POST
- SIGN(S) ON TWO WOOD POST
- (000) SIGN GROUP NUMBER

PROJECT NO: 8900-06-76	HWY: CTH D	COUNTY: TAYLOR	PERMANENT SIGNING	SHEET 23	E

FILE NAME : P:\PT\T\Tayhd\108326\CAD\SNTAYD04.dgn PLOT TIME : 10:50:17 AM PLOT DATE : 1/30/2013 PLOT BY : SEH PLOT NAME : PLOT SCALE : N/A

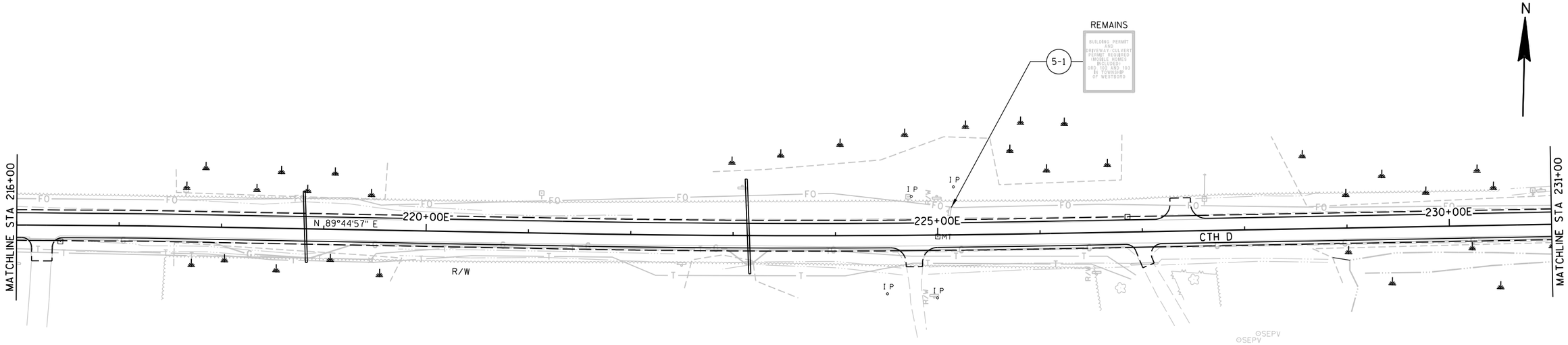

SIGN LEGEND

- SIGN(S) ON EXISTING POST
- SIGN(S) ON ONE POST TUBULAR STEEL 2 X 2 - INCH
- SIGN(S) ON ONE WOOD POST
- SIGN(S) ON TWO WOOD POST
- (000) SIGN GROUP NUMBER

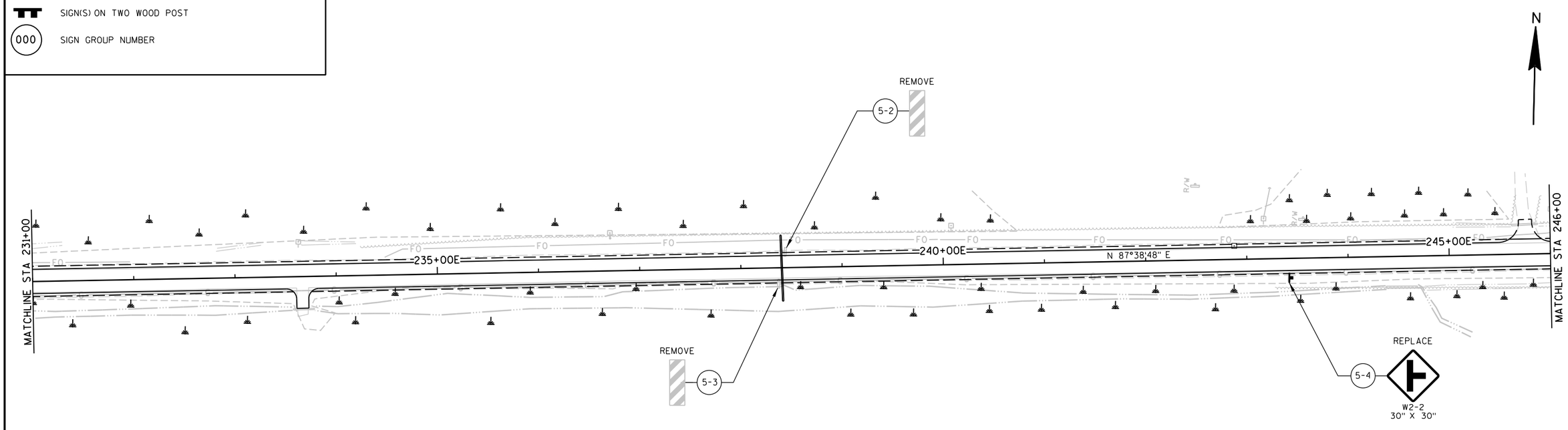

PROJECT NO: 8900-06-76	HWY: CTH D	COUNTY: TAYLOR	PERMANENT SIGNING	SHEET 24	E

2

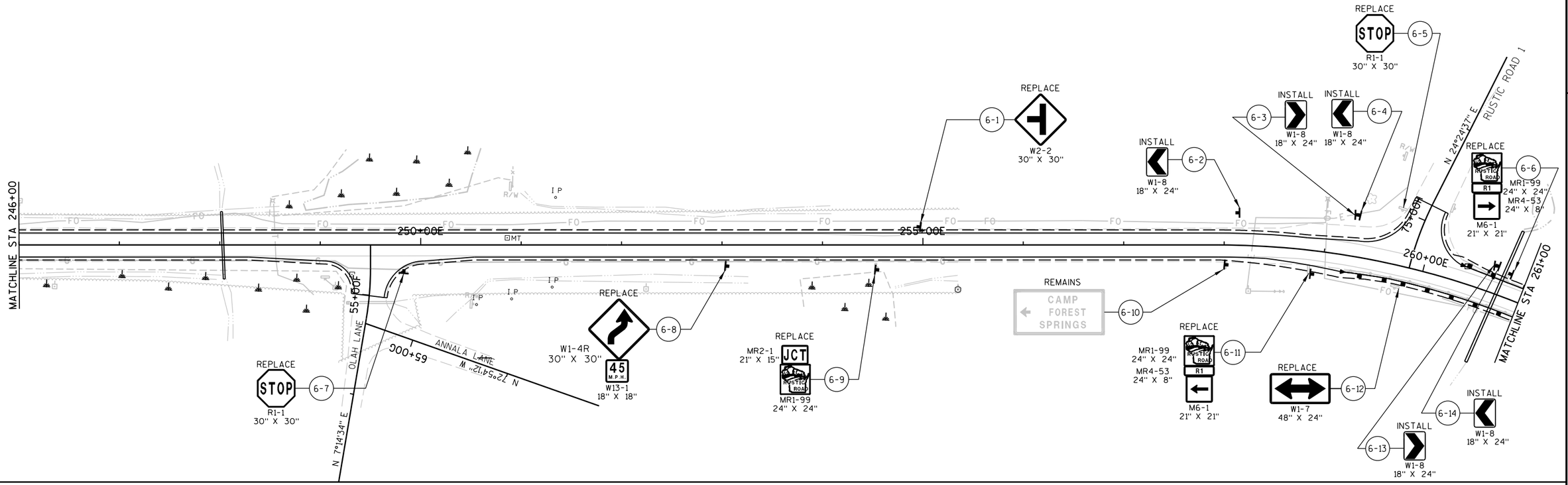

SIGN LEGEND

- SIGN(S) ON EXISTING POST
- SIGN(S) ON ONE POST TUBULAR STEEL 2 X 2 - INCH
- SIGN(S) ON ONE WOOD POST
- SIGN(S) ON TWO WOOD POST
- 000 SIGN GROUP NUMBER

PROJECT NO: 8900-06-76	HWY: CTH D	COUNTY: TAYLOR	PERMANENT SIGNING	SHEET 25	E

FILE NAME : P:\PT\T\Tayhd\108326\CAD\SNTAYD06.dgn PLOT TIME : 10:50:18 AM PLOT DATE : 1/30/2013 PLOT BY : SEH PLOT NAME : PLOT SCALE : N/A

2

SIGN LEGEND

- SIGN(S) ON EXISTING POST
- SIGN(S) ON ONE POST TUBULAR STEEL 2 X 2 - INCH
- SIGN(S) ON ONE WOOD POST
- SIGN(S) ON TWO WOOD POST
- (000) SIGN GROUP NUMBER

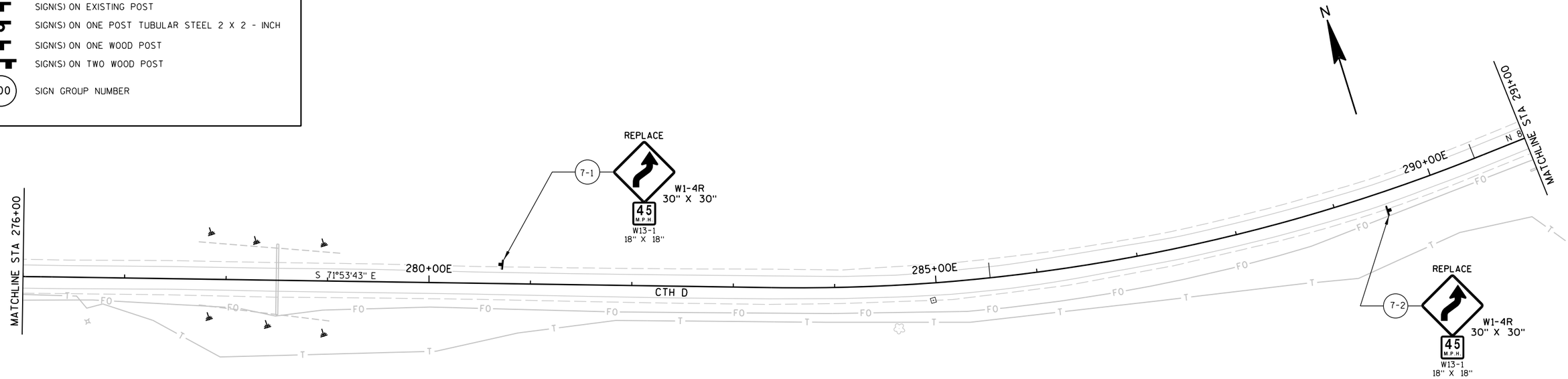

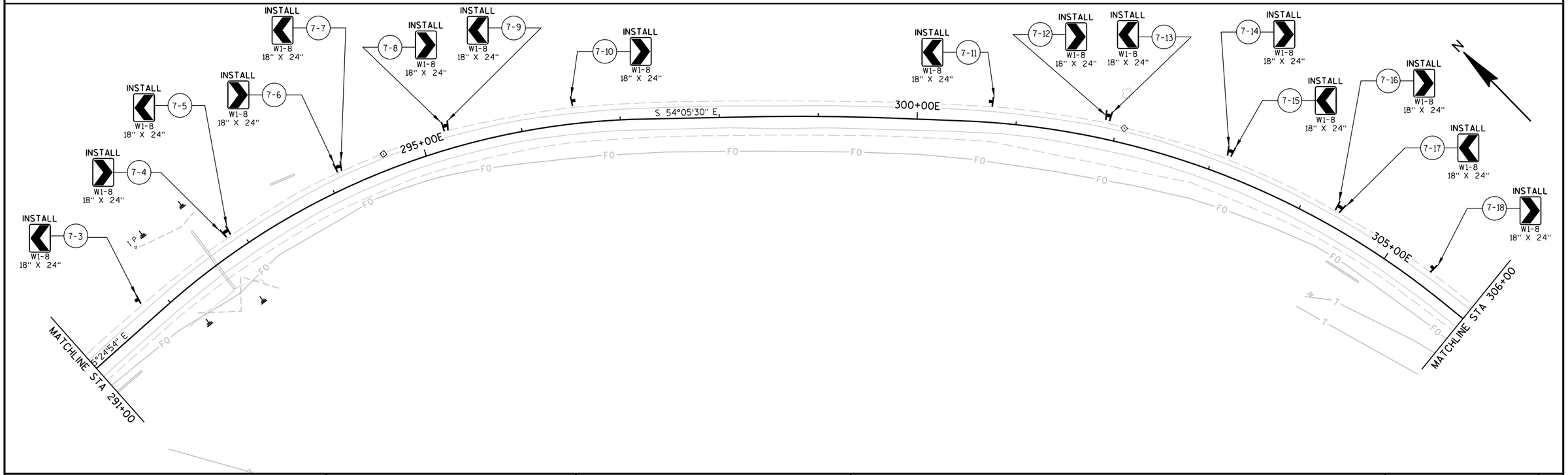

PROJECT NO: 8900-06-76	HWY: CTH D	COUNTY: TAYLOR	PERMANENT SIGNING	SHEET 26	E

2

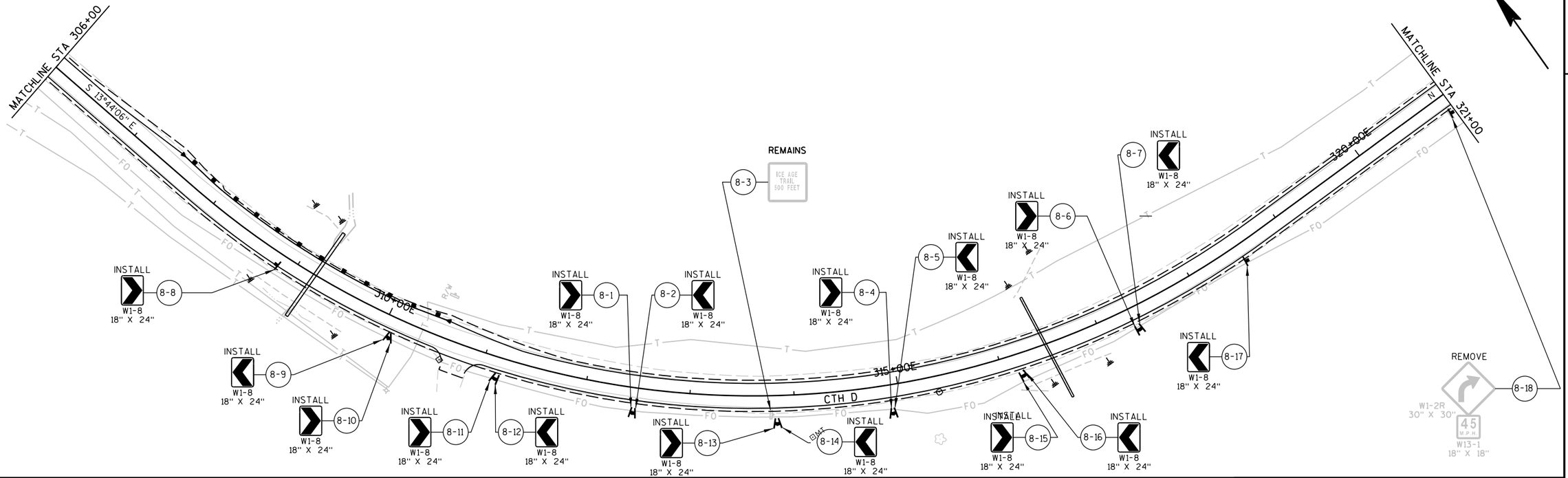

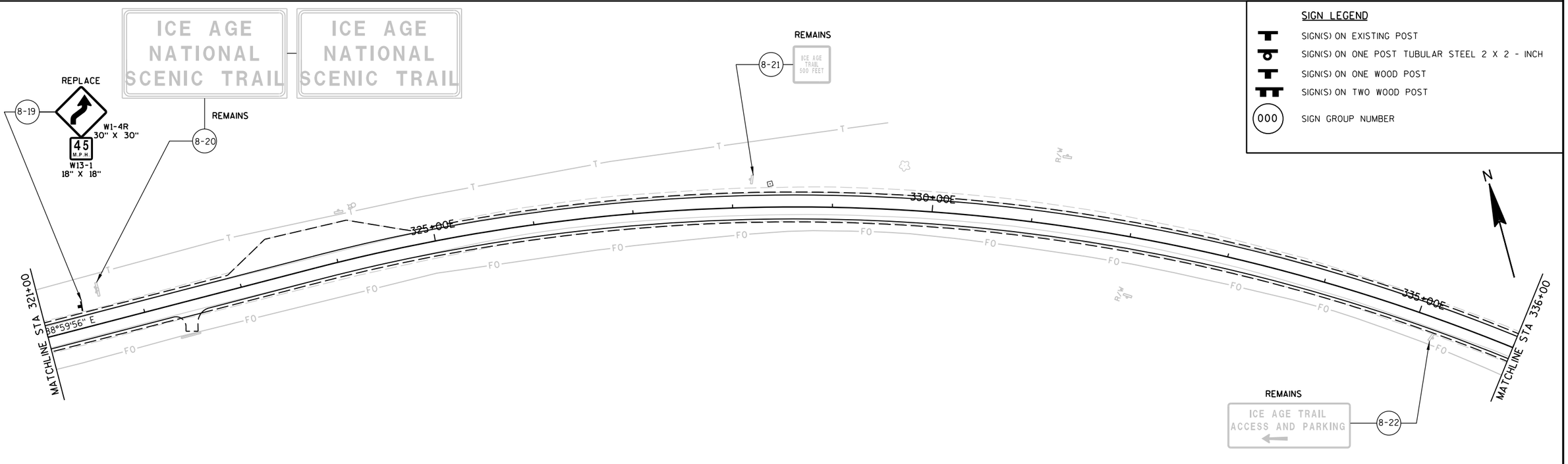

SIGN LEGEND

- SIGN(S) ON EXISTING POST
- SIGN(S) ON ONE POST TUBULAR STEEL 2 X 2 - INCH
- SIGN(S) ON ONE WOOD POST
- SIGN(S) ON TWO WOOD POST
- 000 SIGN GROUP NUMBER

PROJECT NO: 8900-06-76	HWY: CTH D	COUNTY: TAYLOR	PERMANENT SIGNING	SHEET 27	E

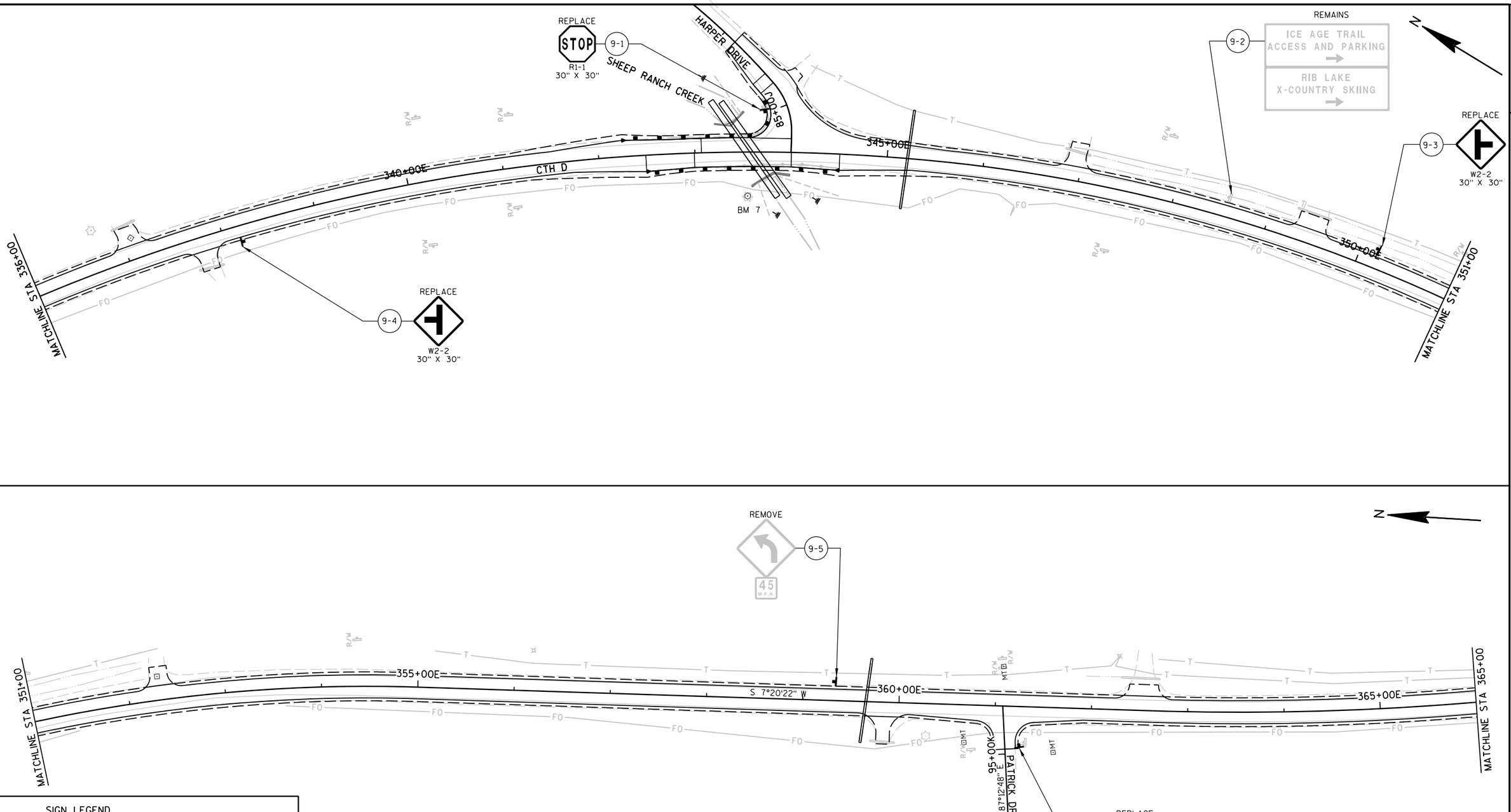

SIGN LEGEND

- SIGN(S) ON EXISTING POST
- SIGN(S) ON ONE POST TUBULAR STEEL 2 X 2 - INCH
- SIGN(S) ON ONE WOOD POST
- SIGN(S) ON TWO WOOD POST
- (000) SIGN GROUP NUMBER

PROJECT NO: 8900-06-76	HWY: CTH D	COUNTY: TAYLOR	PERMANENT SIGNING	SHEET 28	E

2

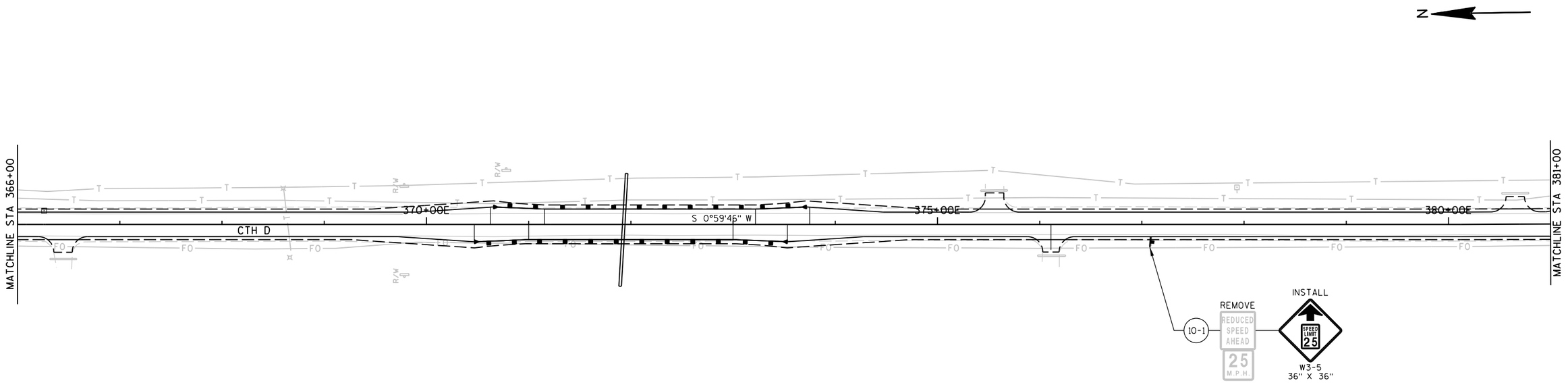

SIGN LEGEND

- SIGN(S) ON EXISTING POST
- SIGN(S) ON ONE POST TUBULAR STEEL 2 X 2 - INCH
- SIGN(S) ON ONE WOOD POST
- SIGN(S) ON TWO WOOD POST
- 000 SIGN GROUP NUMBER

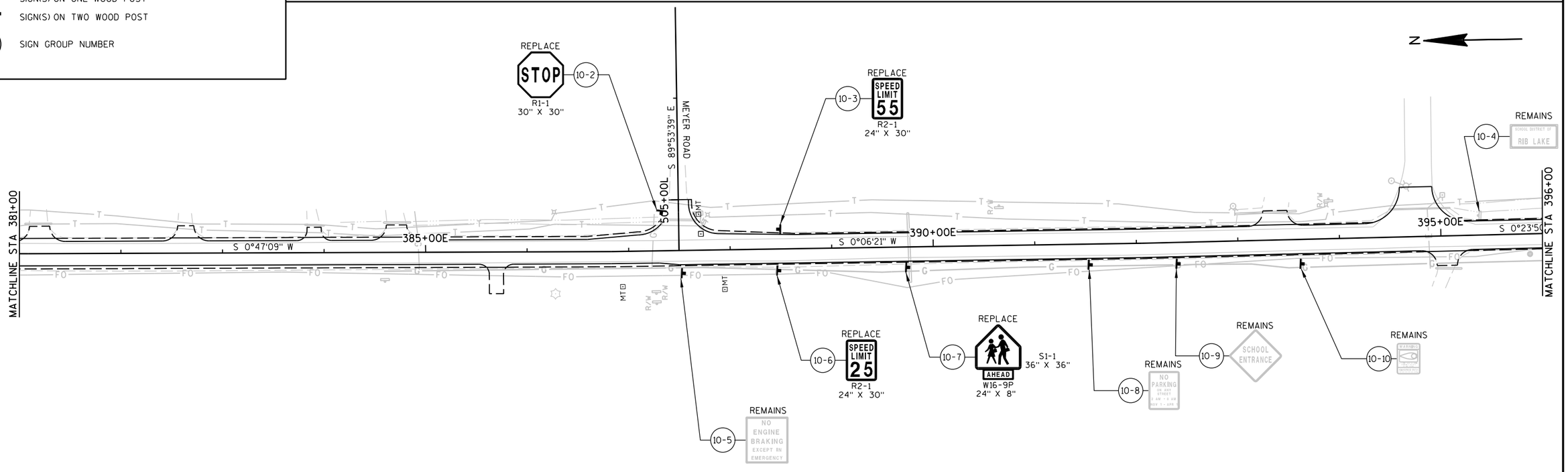

PROJECT NO: 8900-06-76	HWY: CTH_D	COUNTY: TAYLOR	PERMANENT SIGNING	SHEET 29	E

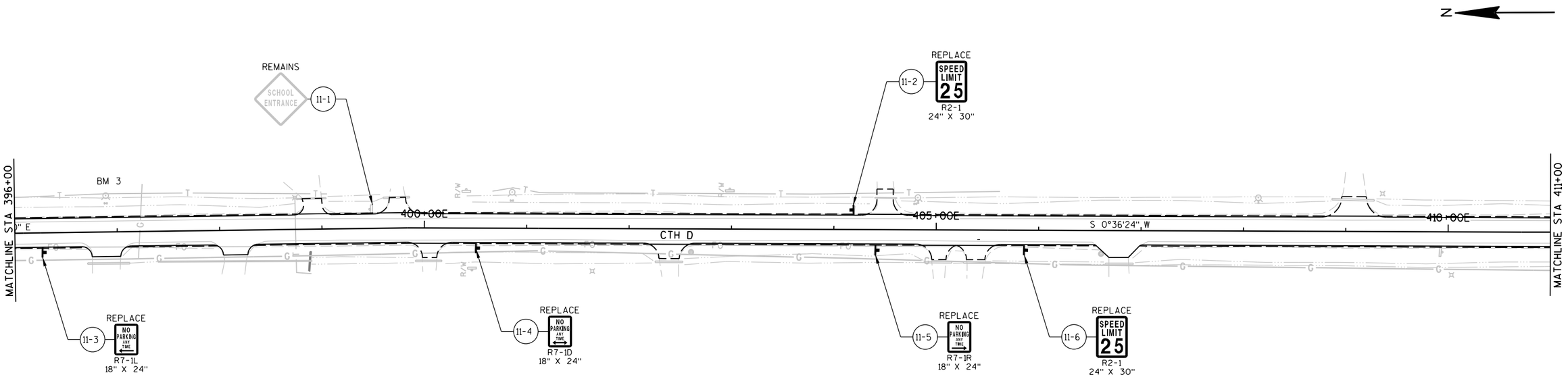

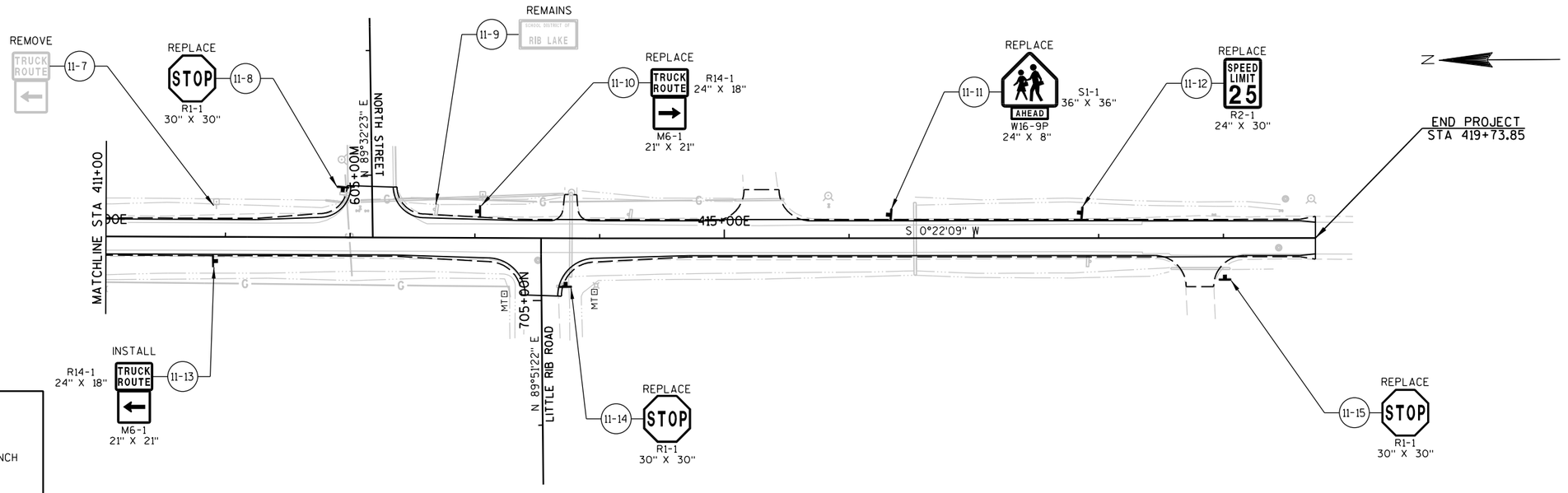

SIGN LEGEND

- SIGN(S) ON EXISTING POST
- SIGN(S) ON ONE POST TUBULAR STEEL 2 X 2 - INCH
- SIGN(S) ON ONE WOOD POST
- SIGN(S) ON TWO WOOD POST
- (000) SIGN GROUP NUMBER

PROJECT NO: 8900-06-76	HWY: CTH_D	COUNTY: TAYLOR	PERMANENT SIGNING	SHEET 30	E

NOTES:

THE EXACT NUMBER, LOCATION AND SPACING OF ALL SIGNS ARE APPROXIMATE AND SHALL BE ADJUSTED TO FIT FIELD CONDITIONS.

DURING HOURS OF DARKNESS ALL BARRICADES USED TO SHIELD A HAZARD SHALL BE EQUIPPED WITH WARNING LIGHTS, TYPE A.

ALL SIGNS ARE TYPE 2 UNLESS OTHERWISE NOTED.

UNLESS OTHERWISE NOTED, THE CONTRACTOR SHALL MAINTAIN ACCESS TO ALL DRIVEWAYS AT ALL TIMES DURING CONSTRUCTION.

ALL SIGNS OR PAVEMENT MARKING, TEMPORARY OR EXISTING, MAY CONFLICT WITH THE CONSTRUCTION TRAFFIC PATTERN SHALL BE REMOVED OR COVERED.

ALL SIGNS SHALL BE FURNISHED BY THE CONTRACTOR.

ALL TRAFFIC CONTROL DEVICES SHALL BE IN CONFORMANCE WITH THE "WISCONSIN MANUAL ON UNIFORM TRAFFIC CONTROL DEVICES" (WMTCD) AND STANDARD DETAIL DRAWINGS.

UNLESS OTHERWISE NOTED, THE CONTRACTOR SHALL MAINTAIN ACCESS TO ALL DRIVEWAYS AT ALL TIMES DURING CONSTRUCTION.

ALL SIDEROAD INTERSECTIONS WITHIN THE PROJECT LIMITS SHALL BE CLOSED AND SIGNED IN ACCORDANCE WITH DETAIL 4 OF THE SDD "BARRICADES AND SIGNS FOR SIDEROAD CLOSURES".

TYPICAL SIGN SPACING, SIGN CODES, SIGN SIZES AND ADDITIONAL GENERAL NOTES SHALL BE IN ACCORDANCE WITH SDD'S "BARRICADES AND SIGNS FOR MAINLINE CLOSURES" AND "BARRICADES AND SIGNS FOR SIDEROAD CLOSURES".

A 200' SPACING BETWEEN SIGN LOCATIONS SHALL BE MAINTAINED WHEREVER CONDITIONS ALLOW.

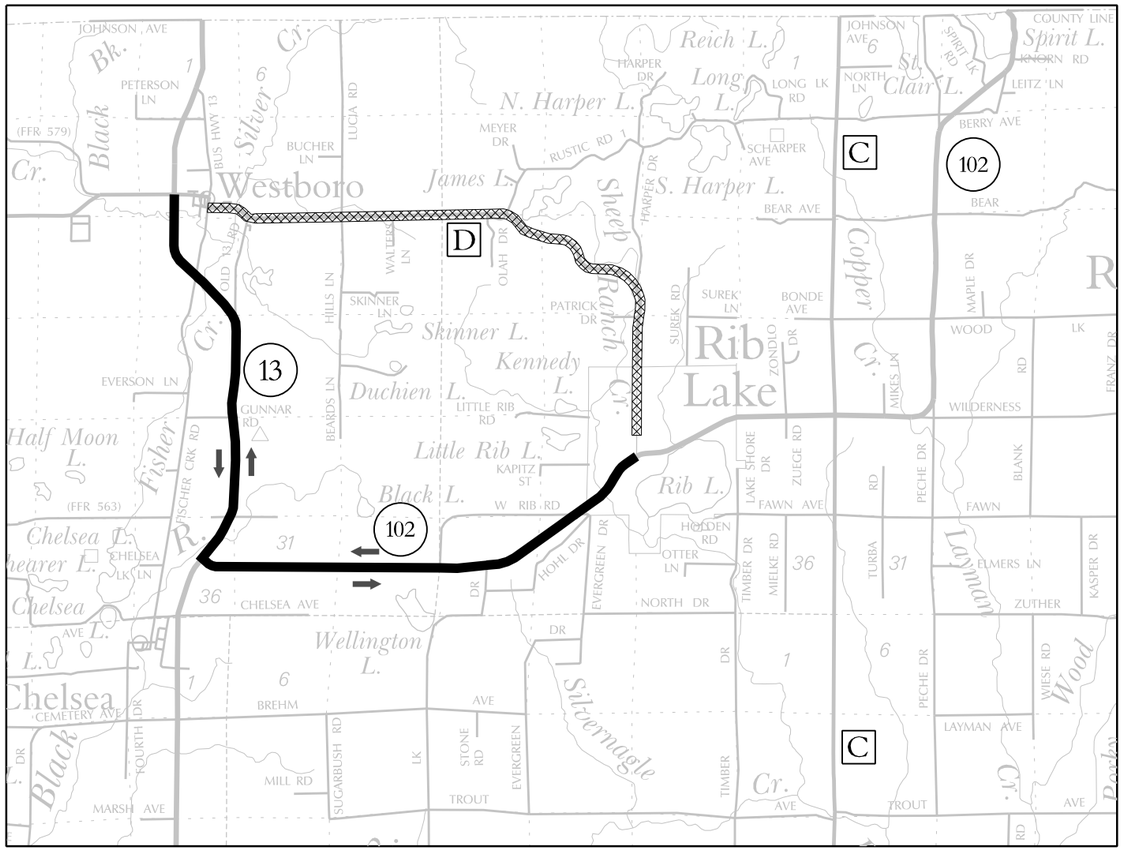

LEGEND

- DETOUR ROUTE
- BARRICADES TYPE III (SEE SDD "BARRICADES AND SIGNS FOR MAINLINE CLOSURES")
- BARRICADES TYPE III WITH SIGN
- SIGN ON WOOD POST
- SIGN ON EXISTING POST
- DIRECTION OF TRAFFIC
- EXISTING SIGNS SHALL BE COVERED
- WORK ZONE

PROJECT NO: 8900-06-76	HWY: CTH D	COUNTY: TAYLOR	TRAFFIC CONTROL & DETOUR SIGNING	SHEET 31	E

2

2

N

DETOUR AHEAD
W20-2
48" X 48"

M4-8
24" X 12"
M3-2
24" X 12"
M1-5A
24" X 24"
DETOUR
EAST
COUNTY
D
M6-1
21" X 21"

DETOUR AHEAD
W20-2
48" X 48"

D

M4-8
24" X 12"
M3-2
24" X 12"
M1-5A
24" X 24"
DETOUR
EAST
COUNTY
D
M6-1
21" X 21"

M4-6
24" X 12"
M4-8
24" X 12"
M1-5A
24" X 24"
END
DETOUR
COUNTY
D

M4-8
24" X 12"
M3-2
24" X 12"
M1-5A
24" X 24"
DETOUR
EAST
COUNTY
D

BUS HWY 13

PINE LINE TRAIL

Silver

Westboro

ROAD WORK AHEAD
W20-1
48" X 48"

ROAD WORK AHEAD
W20-1
48" X 48"

ROAD CLOSED
R11-2
48" X 30"

HILLS LN

WALTERS LN

OLAH DR

D

James L.

ICE AGE TRAIL

R11-3
60" X 30"
ROAD CLOSED
1/2 MILE AHEAD
LOCAL TRAFFIC ONLY
TYPE III BARRICADE
VIEW FROM THE WEST
C.T.H. D

W01-6
48" X 24"
TYPE III BARRICADE
VIEW FROM THE WEST
C.T.H. D

OLD 13 RD

M4-8
24" X 12"
M3-2
24" X 12"
M1-5A
24" X 24"
DETOUR
EAST
COUNTY
D

M4-8
24" X 12"
M3-4
24" X 12"
M1-5A
24" X 24"
DETOUR
WEST
COUNTY
D

Cr.

13

Skinner L.

Duchien L.

ROAD WORK AHEAD
W20-1
48" X 48"

ROAD WORK AHEAD
W20-1
48" X 48"

EVERSON LN

STOP

GUNNAR RD

Fisher

Kennedy L.

Little Rib L.

LEGEND

- DETOUR ROUTE
- BARRICADES TYPE III (SEE SDD "BARRICADES AND SIGNS FOR MAINLINE CLOSURES")
- BARRICADES TYPE III WITH SIGN
- SIGN ON WOOD POST
- SIGN ON EXISTING POST
- DIRECTION OF TRAFFIC
- EXISTING SIGNS SHALL BE COVERED
- WORK ZONE

PROJECT NO: 8900-06-76	HWY: CTH D	COUNTY: TAYLOR	TRAFFIC CONTROL & DETOUR SIGNING	SHEET 32	E

FILE NAME : P:\PT\T\Tayhd\108326\CAD\DTTAYD02.dgn PLOT TIME : 10:50:21 AM PLOT DATE : 1/30/2013 PLOT BY : SEH PLOT NAME : PLOT SCALE : N/A

2

2

M4-8
24" X 12"
M3-2
24" X 12"
M1-5A
24" X 24"
DETOUR
EAST
COUNTY
D

DETOUR
WEST
COUNTY
D
M4-8
24" X 12"
M3-4
24" X 12"
M1-5A
24" X 24"

13

EVERSON LN

STOP

GUNNAR RD

Fisher Cr.

Duchien L.

N

Ranch Cr.

D

ROAD CLOSED
R11-2
48" X 30"

Kennedy L.

Little Rib L.

R11-3
60" X 30"
ROAD CLOSED
13 MILES AHEAD
LOCAL TRAFFIC ONLY
TYPE III BARRICADE
VIEW FROM THE WEST
C.T.H. D

W01-6
48" X 24"
TYPE III BARRICADE
VIEW FROM THE WEST
C.T.H. D

DETOUR AHEAD
W20-2
48" X 48"

DETOUR
WEST
COUNTY
D
M4-8
24" X 12"
M3-4
24" X 12"
M1-5A
24" X 24"
M6-1
21" X 21"

Rib L.

END
DETOUR
COUNTY
D
M4-6
24" X 12"
M4-8
24" X 12"
M1-5A
24" X 24"

COVER EXISTING

STOP

Black L.

FAWN AVE

W RIB RD

M4-8
24" X 12"
M3-2
24" X 12"
M1-5A
24" X 24"
DETOUR
EAST
COUNTY
D
M6-1
21" X 21"

DETOUR
WEST
COUNTY
D
M4-8
24" X 12"
M3-4
24" X 12"
M1-5A
24" X 24"
M6-1
21" X 21"

102

DETOUR
WEST
COUNTY
D
M4-8
24" X 12"
M3-4
24" X 12"
M1-5A
24" X 24"

M4-8
24" X 12"
M3-2
24" X 12"
M1-5A
24" X 24"
DETOUR
EAST
COUNTY
D

HOHL DR

EVERGREEN DR

DR

LEGEND

- DETOUR ROUTE
- BARRICADES TYPE III (SEE SDD "BARRICADES AND SIGNS FOR MAINLINE CLOSURES")
- BARRICADES TYPE III WITH SIGN
- SIGN ON WOOD POST
- SIGN ON EXISTING POST
- DIRECTION OF TRAFFIC
- EXISTING SIGNS SHALL BE COVERED
- WORK ZONE

PROJECT NO: 8900-06-76	HWY: CTH D	COUNTY: TAYLOR	TRAFFIC CONTROL & DETOUR SIGNING	SHEET 33	E

DATE 06MAR13 E S T I M A T E O F Q U A N T I T I E S

LINE NUMBER	ITEM	ITEM DESCRIPTION	UNIT	TOTAL	8900-06-76 QUANTITY
0010	201.0105	CLEARING	STA	65.000	65.000
0020	201.0205	GRUBBING	STA	65.000	65.000
0030	203.0100	REMOVING SMALL PIPE CULVERTS	EACH	24.000	24.000
0040	203.0200	REMOVING OLD STRUCTURE (STATION) 01. 340+53	LS	1.000	1.000
0050	203.0200	REMOVING OLD STRUCTURE (STATION) 02. 343+64	LS	1.000	1.000
0060	204.0110	REMOVING ASPHALTIC SURFACE	SY	1,015.000	1,015.000
0070	204.0115	REMOVING ASPHALTIC SURFACE BUTT JOINTS	SY	1,369.000	1,369.000
0080	204.0165	REMOVING GUARDRAIL	LF	1,222.000	1,222.000
0090	205.0100	EXCAVATION COMMON	CY	9,020.000	9,020.000
0100	205.0400	EXCAVATION MARSH	CY	3,010.000	3,010.000
0110	208.0100	BORROW	CY	23,460.000	23,460.000
0120	211.0100	PREPARE FOUNDATION FOR ASPHALTIC PAVING (PROJECT) 01. 8900-06-76	LS	1.000	1.000
0130	213.0100	FINISHING ROADWAY (PROJECT) 01. 8900-06-76	EACH	1.000	1.000
0140	305.0110	BASE AGGREGATE DENSE 3/4-INCH	TON	9,310.000	9,310.000
0150	305.0120	BASE AGGREGATE DENSE 1 1/4-INCH	TON	6,290.000	6,290.000
0160	325.0100	PULVERIZE AND RELAY	SY	74,799.000	74,799.000
0170	440.4410.S	INCENTIVE IRI RIDE	DOL	24,210.000	24,210.000
0180	455.0105	ASPHALTIC MATERIAL PG58-28	TON	1,235.000	1,235.000
0190	455.0605	TACK COAT	GAL	2,360.000	2,360.000
0200	460.1101	HMA PAVEMENT TYPE E-1	TON	20,560.000	20,560.000
0210	460.2000	INCENTIVE DENSITY HMA PAVEMENT	DOL	13,170.000	13,170.000
0220	522.0172	CULVERT PIPE REINFORCED CONCRETE CLASS III 72-INCH	LF	228.000	228.000
0230	522.0330	CULVERT PIPE REINFORCED CONCRETE CLASS IV 30-INCH	LF	145.000	145.000
0240	522.0336	CULVERT PIPE REINFORCED CONCRETE CLASS IV 36-INCH	LF	98.000	98.000
0250	530.0112	CULVERT PIPE CORRUGATED POLYETHYLENE 12-INCH	LF	42.000	42.000
0260	530.0118	CULVERT PIPE CORRUGATED POLYETHYLENE 18-INCH	LF	66.000	66.000
0270	530.0124	CULVERT PIPE CORRUGATED POLYETHYLENE 24-INCH	LF	1,203.000	1,203.000
0280	530.0130	CULVERT PIPE CORRUGATED POLYETHYLENE 30-INCH	LF	188.000	188.000
0290	530.0136	CULVERT PIPE CORRUGATED POLYETHYLENE 36-INCH	LF	250.000	250.000
0300	606.0100	RIPRAP LIGHT	CY	16.000	16.000
0310	614.0305	STEEL PLATE BEAM GUARD CLASS A	LF	175.000	175.000
0320	614.0345	STEEL PLATE BEAM GUARD SHORT RADIUS	LF	68.750	68.750
0330	614.0370	STEEL PLATE BEAM GUARD ENERGY ABSORBING TERMINAL	EACH	3.000	3.000
0340	614.0390	STEEL PLATE BEAM GUARD SHORT RADIUS TERMINAL	EACH	1.000	1.000
0350	614.0920	SALVAGED RAIL	LF	1,222.000	1,222.000
0360	614.0925	SALVAGED GUARDRAIL END TREATMENTS	EACH	12.000	12.000
0370	614.2300	MGS GUARDRAIL 3	LF	1,775.000	1,775.000
0380	614.2330	MGS GUARDRAIL 3 K	LF	200.000	200.000
0390	614.2500	MGS THRIE BEAM TRANSITION	LF	158.000	158.000
0400	614.2610	MGS GUARDRAIL TERMINAL EAT	EACH	20.000	20.000
0410	619.1000	MOBILIZATION	EACH	1.000	1.000
0420	625.0500	SALVAGED TOPSOIL	SY	70,695.000	70,695.000

3

DATE 06MAR13 E S T I M A T E O F Q U A N T I T I E S

LINE NUMBER	ITEM	ITEM DESCRIPTION	UNIT	TOTAL	8900-06-76 QUANTITY
0430	627.0200	MULCHING	SY	88,390.000	88,390.000
0440	628.1504	SILT FENCE	LF	12,780.000	12,780.000
0450	628.1520	SILT FENCE MAINTENANCE	LF	25,560.000	25,560.000
0460	628.1905	MOBILIZATIONS EROSION CONTROL	EACH	1.000	1.000
0470	628.1910	MOBILIZATIONS EMERGENCY EROSION CONTROL	EACH	1.000	1.000
0480	628.2008	EROSION MAT URBAN CLASS I TYPE B	SY	2,260.000	2,260.000
0490	628.6005	TURBIDITY BARRIERS	SY	20.000	20.000
0500	628.6505	SOIL STABILIZER TYPE A	ACRE	0.470	0.470
0510	628.7504	TEMPORARY DITCH CHECKS	LF	84.000	84.000
0520	628.7555	CULVERT PIPE CHECKS	EACH	76.000	76.000
0530	629.0210	FERTILIZER TYPE B	CWT	58.000	58.000
0540	630.0120	SEEDING MIXTURE NO. 20	LB	2,430.000	2,430.000
0550	630.0200	SEEDING TEMPORARY	LB	2,430.000	2,430.000
0560	634.0612	POSTS WOOD 4X6-INCH X 12-FT	EACH	4.000	4.000
0570	634.0614	POSTS WOOD 4X6-INCH X 14-FT	EACH	80.000	80.000
0580	634.0616	POSTS WOOD 4X6-INCH X 16-FT	EACH	29.000	29.000
0590	637.0202	SIGNS REFLECTIVE TYPE II	SF	520.000	520.000
0600	638.2602	REMOVING SIGNS TYPE II	EACH	82.000	82.000
0610	638.3000	REMOVING SMALL SIGN SUPPORTS	EACH	63.000	63.000
0620	642.5001	FIELD OFFICE TYPE B	EACH	1.000	1.000
0630	643.0100	TRAFFIC CONTROL (PROJECT) 01. 8900-06-76	EACH	1.000	1.000
0640	643.0420	TRAFFIC CONTROL BARRICADES TYPE III	DAY	3,560.000	3,560.000
0650	643.0705	TRAFFIC CONTROL WARNING LIGHTS TYPE A	DAY	7,120.000	7,120.000
0660	643.0900	TRAFFIC CONTROL SIGNS	DAY	4,628.000	4,628.000
0670	643.2000	TRAFFIC CONTROL DETOUR (PROJECT) 01. 8900-06-76	EACH	1.000	1.000
0680	643.3000	TRAFFIC CONTROL DETOUR SIGNS	DAY	5,073.000	5,073.000
0690	645.0125	GEOTEXTILE FABRIC TYPE MS	SY	22,575.000	22,575.000
0700	645.0130	GEOTEXTILE FABRIC TYPE R	SY	60.000	60.000
0710	646.0106	PAVEMENT MARKING EPOXY 4-INCH	LF	127,644.000	127,644.000
0720	647.0566	PAVEMENT MARKING STOP LINE EPOXY 18-INCH	LF	181.000	181.000
0730	648.0100	LOCATING NO-PASSING ZONES	MI	6.040	6.040
0740	650.4500	CONSTRUCTION STAKING SUBGRADE	LF	2,057.000	2,057.000
0750	650.5000	CONSTRUCTION STAKING BASE	LF	2,057.000	2,057.000
0760	650.6000	CONSTRUCTION STAKING PIPE CULVERTS	EACH	26.000	26.000
0770	650.8000	CONSTRUCTION STAKING RESURFACING REFERENCE	LF	31,831.000	31,831.000
0780	650.9910	CONSTRUCTION STAKING SUPPLEMENTAL CONTROL (PROJECT) 01. 8900-06-76	LS	1.000	1.000
0790	650.9920	CONSTRUCTION STAKING SLOPE STAKES	LF	31,831.000	31,831.000
0800	690.0150	SAWING ASPHALT	LF	328.000	328.000
0810	ASP.1T0A	ON-THE-JOB TRAINING APPRENTICE AT $5.00/HR	HRS	1,200.000	1,200.000
0820	ASP.1T0G	ON-THE-JOB TRAINING GRADUATE AT $5.00/HR	HRS	300.000	300.000
0830	SPV.0180	SPECIAL 01. GEOGRID	SY	16,603.000	16,603.000

3

3

CLEARING/GRUBBING

STATION	LOCATION	201.0105 CLEARING STA	201.0205 GRUBBING STA
CTH D			
101+00 - 106+00	LT & RT	5	5
112+00 - 114+00	LT & RT	2	2
115+00 - 117+00	LT & RT	2	2
133+00 - 134+00	LT & RT	1	1
149+00 - 150+00	LT & RT	1	1
157+00 - 158+00	LT & RT	1	1
161+00 - 163+00	LT & RT	2	2
174+00 - 182+00	LT & RT	8	8
183+00 - 184+00	LT & RT	1	1
185+00 - 192+00	LT & RT	7	7
195+00 - 204+00	LT & RT	9	9
208+00 - 227+00	LT & RT	19	19
243+00 - 246+00	LT & RT	3	3
247+00 - 251+00	LT & RT	4	4
ITEM TOTALS		65	65

REMOVING ASPHALTIC SURFACE

STATION	LOCATION	204.0110 SY	204.0115 BUTT JOINTS SY
CTH D			
100+62.93	LT & RT		342
419+73.85	LT & RT		342
DRIVEWAYS			
233+67	RT	25	
394+79	LT	150	
396+89	RT	50	
398+15	RT	45	
406+78	RT	60	
SIDE ROADS			
LEONARD LANE	LT	60	
OLD RD 13	RT		171
LUCIA ROAD	LT	345	
HILLS LANE	RT	280	
WALTERS LANE	RT		171
HARPER DRIVE	RT		171
NORTH STREET	RT		171
ITEM TOTAL		1015	1369

REMOVING GUARDRAIL

STATION	LOCATION	204.0165 LF
CTH D		
114+75-115+00	LT & RT	232
116+00-117+00	LT & RT	192
259+00-263+00	LT & RT	537
342+75-344+50	LT & RT	261
ITEM TOTAL		1222

EXCAVATION

STATION	LOCATION	205.0100 COMMON CY	AIR FILL CY	*EXPANDED FILL CY	208.0100 BORROW CY	205.0400 MARSH CY	**MARSH EXPANDED FILL CY
CTH D							
100+62.92 - 419+73.85	LT & RT	9020	21512	27965	23460		
179+50 - 231+00	LT & RT					3010	4515
ITEM TOTAL		9020	21512	27965	23460	3010	4515

*NOTE: EXPANSION FACTOR = 1.3
**NOTE: EXPANSION FACTOR = 1.5

PREPARE FOUNDATION FOR ASPHALTIC PAVING (PROJECT)

STATION	LOCATION	211.0100 LS
CTH D		
100+62.92 - 419+73.85	LT & RT	1
ITEM TOTAL		1

FINISHING ROADWAY (PROJECT)

STA	LOCATION	213.0100 EACH
CTH D		
100+62.92 - 419+73.85	LT & RT	1
ITEM TOTAL		1

PULVERIZE AND RELAY

STATION	LOCATION	325.0100 SY
CTH D		
111+00 - 115+00.78	LT & RT	1069
115+81.12 - 171+25	LT & RT	13552
181+45 - 419+73.85	LT & RT	58248
SIDE ROADS		
LEONARD LANE	LT	60
OLD RD 13	RT	430
LUCIA ROAD	LT	345
HILLS LANE	RT	280
WALTERS LANE	RT	205
HARPER DRIVE	RT	490
NORTH STREET	RT	120
ITEM TOTAL		74799

3

PIPE CULVERTS

STATION	LOCATION	203.0100 REMOVING SMALL PIPE CULVERTS EACH	203.0200 REMOVING OLD STRUCTURE (STATION) LS	203.0200 REMOVING OLD STRUCTURE (STATION) LS	522.0330 CULVERT PIPE REINFORCED CONCRETE CLASS IV 30-INCH LF	522.0336 CULVERT PIPE REINFORCED CONCRETE CLASS IV 36-INCH LF	522.0172 CULVERT PIPE REINFORCED CONCRETE CLASS III 72-INCH LF	530.0112 CULVERT PIPE CURROGATED POLYETHYLENE 12-INCH LF	530.0118 CULVERT PIPE CURROGATED POLYETHYLENE 18-INCH LF	530.0124 CULVERT PIPE CURROGATED POLYETHYLENE 24-INCH LF	530.0130 CULVERT PIPE CURROGATED POLYETHYLENE 30-INCH LF	530.0136 CULVERT PIPE CURROGATED POLYETHYLENE 36-INCH LF	REMARKS
CTH D													
103+57.9	LT									10			EXTEND EXISTING
117+62.3		1									84		
133+78.2		1								65			
136+07.6		1								69			
147+63.4		1								62			
157+10.5		1								64			
162+44.6		1										72	
164+86.5		1										82	
176+49								42					
180+43.7		1								74			
189+51.0		1				98							
196+62.5		1								107			
203+67.4		1								77			
218+82.0		1								68			
223+14.9		1								91			
238+40.5		1								63			
248.03.0		1								65			
260+76.0		1			145								
292+60.5		1								88			
309+19.1		1										96	
316+47.0		1								107			
343+53.4			1				114						
343+64.3				1			114						
345+21.1		1								104			
359+65.5		1								89			
371+93.0		1									104		
DRIVEWAYS													
149+38.0		1							32				
208+59.9		1							34				
ITEM TOTALS		24	1	1	145	98	228	42	66	1203	188	250	

BASE COURSE DENSE

STATION	LOCATION	305.0110 3/4-INCH TON	305.0120 1 1/4-INCH TON
CTH D			
100+62.92 - 115+00.78	LT & RT	230	3200
115+81.12 - 419+73.85	LT & RT	5580	2950
WEDGING		3035	
DRIVEWAYS		465	140
ITEM TOTALS		9310	6290

RIPRAP LIGHT

STATION	LOCATION	606.0100 CY
CTH D		
373+75 - 374+00	LT	8
373+75 - 374+00	RT	8
ITEM TOTAL		16

MOBILIZATION

STATION	LOCATION	619.1000 EACH
CTH D		
100+62.92 - 419+73.85	LT & RT	1
ITEM TOTAL		1

ASPHALTIC PAVEMENT ITEMS

STATION	LOCATION	455.0105 ASPHALTIC MATERIAL PG58-28 TON	455.0605 TACK COAT GAL	460.1101 HMA PAVEMENT TYPE E-1 TON
CTH D				
100+62.92 - 115+00.78	LT & RT	80	140	1320
115+81.12 - 419+73.85	LT & RT	1155	2220	19240
ITEM TOTAL		1235	2360	20560

3

GUARDRAIL ITEMS

STATION	LOCATION	614.0305 STEEL PLATE BEAM GUARD CLASS A LF	614.0345 STEEL PLATE BEAM GUARD SHORT RADIUS LF	614.0920 SALVAGED RAIL LF	614.0925 SALVAGED GUARDRAIL END TREATMENTS EACH	614.0370 STEEL PLATE BEAM GUARD EAT EACH	614.0390 STEEL PLATE BEAM GUARD SHORT RADIUS TERMINAL EACH	614.2300 MGS GUARDRAIL 3 LF	614.2330 MGS GUARDRAIL 3K LF	614.2500 MGS THRIE BEAM TRANSITION LF	614.2610 MGS TERMINAL EAT EACH
CTH D											
114+11.3-114+63.4	LT	-	-	-	1	-	-	-	-	-	1
114+5.9-114+60.4	RT	-	-	-	1	-	-	-	-	-	1
114+60.4-115+00.8	RT	-	-	116	-	-	-	-	-	39.4	-
114+63.4-115+02.1	LT	-	-	116	-	-	-	-	-	39.4	-
115+79.4-116+18.1	LT	-	-	77	-	-	-	-	-	39.4	-
115+81.4-116+21.8	RT	-	-	115	-	-	-	-	-	39.4	-
116+18.1-116+70.2	LT	-	-	-	1	-	-	-	-	-	1
116+21.8-116+73.3	RT	-	-	-	1	-	-	-	-	-	1
259+18.8-259+73.0	RT	-	-	-	1	-	-	-	-	-	1
259+73.0-261+51.4	RT	-	-	279	-	-	-	175	-	-	-
260+34.7-260+88.8	LT	-	-	-	1	-	-	-	-	-	1
260+86.8-262+95.4	LT	-	-	258	-	-	-	212.5	-	-	-
261+51.4-262+05.5	RT	-	-	-	1	-	-	-	-	-	1
262+95.4-263+47.4	LT	-	-	-	1	-	-	-	-	-	1
285+00-285+53.3	LT	-	-	-	-	-	-	-	-	-	1
285+53.6-290+45.2	LT	-	-	-	-	-	-	487.5	-	-	-
290+45.2-290+98.3	LT	-	-	-	-	-	-	-	-	-	1
291+50.0-292+03.3	RT	-	-	-	-	-	-	-	-	-	1
292+03.3-293+05.4	RT	-	-	-	-	-	-	100	-	-	-
293+05.4-293+59.6	RT	-	-	-	-	-	-	-	-	-	1
297+00-297+52.7	LT	-	-	-	-	-	-	-	-	-	1
297+52.7-301+49.9	LT	-	-	-	-	-	-	400	-	-	-
301+49.9-302+02.0	LT	-	-	-	-	-	-	-	-	-	1
307+45.9-307+99.4	LT	-	-	-	-	-	-	-	-	-	1
307+99.4-310+03.2	LT	-	-	-	-	-	-	-	200	-	-
310+03.2-310+57.3	LT	-	-	-	-	-	-	-	-	-	1
342+25.0-342+74.5	LT	-	-	-	1	1	-	-	-	-	-
342+49.0-342+99.4	RT	-	-	-	1	1	-	-	-	-	-
342+74.5-343+48.9	LT	75	-	134	-	-	-	-	-	-	-
342+99.4-344+00.2	RT	100	-	127	-	-	-	-	-	-	-
344+00.2-344+50.6	RT	-	-	-	1	1	-	-	-	-	-
370+46.9-371+00	RT	-	-	-	-	-	-	-	-	-	1
370+65.7-371+18.8	LT	-	-	-	-	-	-	-	-	-	1
371+00-373+00	RT	-	-	-	-	-	-	200	-	-	-
371+18.8-373+71.8	LT	-	-	-	-	-	-	200	-	-	-
373+00-373+53.1	RT	-	-	-	-	-	-	-	-	-	1
373+18.8-373+71.8	LT	-	-	-	-	-	-	-	-	-	1
HARPER DRIVE											
84+64.3-85+26.1	LT	-	68.75	-	-	-	-	-	-	-	-
85+26.1+85+40.0	LT	-	-	-	1	-	1	-	-	-	-
ITEM TOTALS		175	68.75	1222	12	3	1	1775	200	158	20

SALVAGED TOPSOIL, MULCHING AND SEEDING

STATION	LOCATION	625.0500 SALVAGED TOPSOIL SY	627.0200 MULCHING SY	629.0210 FERTILIZER TYPE B CWT	630.0120 SEEDING MIXTURE NO. 20 LB	630.0200 TEMPORARY SEEDING LB
CTH D						
100+62.92 - 115+00.78	LT&RT	2695	3490	2	95	95
115+81.12 - 419+73.85	LT&RT	68000	84900	56	2335	2335
ITEM TOTAL		70695	88390	58	2430	2430

MOBILIZATIONS EROSION CONTROL

STATION	628.1905 EROSION CONTROL EACH	628.1910 EMERGENCY EROSION CONTROL EACH
CTH D		
100+62.92 - 419+73.85	1	1
ITEM TOTALS	1	1

EROSION CONTROL ITEMS

STATION	LOCATION	628.1504 SILT FENCE LF	628.1520 SILT FENCE MAINTENANCE LF	628.2005 TURBIDITY BARRIER SY	628.2008 EROSION MAT URBAN CLASS I TYPE B SY	628.6505 SOIL STABILIZER TYPE A ACRE	628.7504 TEMPORARY DITCH CHECKS LF	628.7555 CULVERT PIPE CHECKS EACH
CTH D								
102+75 - 105+75	RT	300	600					
109+00	RT						12	
113+00	RT						12	
116+50 - 117+25	RT	75	150					
117+62.3	LT& RT							4
117+25 - 118+00	LT	75	150					
128+00	RT						12	
135+50 - 138+00	LT	250	500					
136+07.6	LT							2
147+00 - 148+00	LT	100	200					
147+00 - 152+00	RT	500	1000					
147+63.4	LT & RT							4
157+10.5	LT & RT							4
157+50 - 161+00	RT	350	700					
152+00 - 163+00	RT	100	200					
162+00 - 165+00	LT	300	600					
162+44.6	LT & RT							6
164+86.5	LT & RT							6
164+75 - 166+50	RT	175	350					
177+00	LT& RT						24	
179+00 - 181+25	RT	225	450					
179+00 - 182+50	LT	350	700					
180+43.7	LT & RT							4
183+00	RT						12	
185+00 - 192+00	LT	700	1400					
186+50 191+50	RT	500	1000					
189+51.0	LT & RT							6
196+00 - 197+00	RT	100	200					
196+25 - 197+50	LT	125	250					
196+62.5	LT & RT							4
200+00 - 207+50	LT	750	1500					
200+75 - 213+50	RT	1275	2550					
208+75 - 213+50	LT	475	950					
215+00	RT						12	
217+00 - 220+00	LT & RT	300	600					
222+50 - 223+50	RT	100	200					
222+50 - 224+50	LT	200	400					
228+50 - 232+00	LT	350	700					
228+50 - 249+25	RT	2075	4150					
248+50 - 250+50	LT	200	400					
260+76.0	LT & RT							4
267+50 - 271+50	RT	400	800					
268+50 - 272+25	LT	375	750					
292+00 - 293+00	LT & RT	200	400		100	0.02		
292+60.5	LT & RT							12
297+50 - 301+00	RT	360	720		650	0.13		
308+00 - 310+00	LT & RT	400	800		460	0.10		
316+00 - 317+50	RT	150	300					
342+50 - 344+00	LT	125	250	20				
343+50 - 345+00	RT	150	300		90	0.02		
359+00 - 360+50	LT	150	300					
359+00 - 360+00	RT	100	200					
371+00 - 373+00	LT & RT	420	840		960	0.20		
371+93.0	LT & RT							20
ITEM TOTALS		12780	25560	20	2260	0.47	84	76

3

PERMANENT SIGNING

SIGN GROUP CODE	SIGN CODE	MESSAGE	SIZE	SIGNS REFLECTIVE TYPE II 637.0202 SF	POSTS WOOD 4X6-INCH 12-FT 634.0612 EACH	POSTS WOOD 4X6-INCH 14-FT 634.0614 EACH	POSTS WOOD 4X6-INCH 16-FT 634.0616 EACH	REMOVING SIGNS TYPE II 638.2602 EACH	REMOVING SMALL SIGN SUPPORTS 636.3000 EACH	REMARKS
1-1	R1-1	STOP	30" X 30"	5.18			1	2	1	REPLACE EXISTING SIGN & POST
		RIGHT TURN NO STOP								REMAINS
1-2	W3-1	STOP AHEAD	36" X 36"	9.00			1			INSTALL SIGN & POST
1-3	R1-1	STOP	30" X 30"	5.18		1		1	1	REPLACE EXISTING SIGN & POST
1-4	J4-1	EAST	24" X 38"	6.00			1			INSTALL SIGN & POST
		CTH D						1	1	REMOVE EXISTING SIGN & POST
1-5	R2-1	SPEED LIMIT 25	24" X 30"	5.00		1		1	1	REPLACE EXISTING SIGN & POST
1-7	W1-4R	REVERSE CURVE RIGHT	30" X 30"	6.25			1	1	1	REPLACE EXISTING SIGN & POST
1-8	W5-52L	CLEARANCE STRIPER DOWN RIGHT	12" X 36"	3.00	1			1	1	REPLACE EXISTING SIGN & POST
1-9	W5-52R	CLEARANCE STRIPER DOWN LEFT	12" X 36"	3.00	1			1	1	REPLACE EXISTING SIGN & POST
1-9	W SIGN	WATCH FOR CHILDREN								REMAINS
1-10		NO PARKING ON ANY STREET FROM 2 AM TO 7 AM NOV 1 TO APRIL 1								REMAINS
1-11	R2-1	SPEED LIMIT 25	24" X 30"	5.00		1		1	1	REPLACE EXISTING SIGN & POST
1-12	W5-52R	CLEARANCE STRIPER DOWN LEFT	12" X 36"	3.00	1			1	1	REPLACE EXISTING SIGN & POST
1-13	W5-52L	CLEARANCE STRIPER DOWN RIGHT	12" X 36"	3.00	1			1	1	REPLACE EXISTING SIGN & POST
1-14	W2-2	SIDE ROAD RIGHT	30" X 30"	6.25			1	1	1	REPLACE EXISTING SIGN & POST
1-15	R2-1	SPEED LIMIT 35	24" X 30"	5.00		1		1	1	REPLACE EXISTING SIGN & POST
1-16	R1-1	STOP	30" X 30"	5.18		1		1	1	REPLACE EXISTING SIGN & POST
1-17	J13-1	CTH D	24" X 45"	7.50			1			REPLACE EXISTING SIGN / NEW POST
		ARROW								
2-1	S3-1	SCHOOL BUS STOP AHEAD	30" X 30"	6.25			1	1	1	REPLACE EXISTING SIGN & POST
2-2	R2-1	SPEED LIMIT 35	24" X 30"	5.00		1		1	1	REPLACE EXISTING SIGN & POST
2-3	W1-4R	REVERSE CURVE RIGHT	30" X 30"	6.25			1	1	1	REPLACE EXISTING SIGN & POST
2-4	W3-5	SPEED LIMIT AHEAD 35	36" X 36"	9.00			1			INSTALL SIGN & POST
		REDUCED SPEED AHEAD	24" X 30"					2	1	REMOVE EXISTING SIGN & POST
	W13-1	35 MPH	18" X 18"							
2-5	R2-1	SPEED LIMIT 55	24" X 30"	5.00		1		1	1	REPLACE EXISTING SIGN & POST
2-6	W11-5	TRACTOR	30" X 30"	6.25			1	1	1	REPLACE EXISTING SIGN & POST
3-1	W2-1	INTERSECTION	30" X 30"	6.25			1	1	1	REPLACE EXISTING SIGN & POST
3-2	R1-1	STOP	30" X 30"	5.18		1		1	1	REPLACE EXISTING SIGN & POST
3-3	W2-1	INTERSECTION	30" X 30"	6.25			1	1	1	REPLACE EXISTING SIGN & POST
3-4	R1-1	STOP	30" X 30"	5.18		1		1	1	REPLACE EXISTING SIGN & POST
4-1	W2-2	SIDE ROAD RIGHT	30" X 30"	6.25			1	1	1	REPLACE EXISTING SIGN & POST
4-2	R1-1	STOP	30" X 30"	5.18		1		1	1	REPLACE EXISTING SIGN & POST
5-1		BUILDING PERMIT AND DRIVEWAY PERMIT REQUIRED								REMAINS
5-2	W5-52R	CLEARANCE STRIPER DOWN LEFT						1	1	REMOVE EXISTING SIGN & POST
5-3	W5-52R	CLEARANCE STRIPER DOWN LEFT						1	1	REMOVE EXISTING SIGN & POST
5-4	W2-2	SIDE ROAD RIGHT	30" X 30"	6.25			1	1	1	REPLACE EIXISTING SIGN & POST
6-1	W2-2	SIDE ROAD LEFT	30" X 30"	6.25			1	1	1	REPLACE EXISTING SIGN & POST
6-2	W1-8	CHEVRON	18" X 24"	3.00		1				INSTALL SIGN & POST
6-3	W1-8	CHEVRON	18" X 24"	3.00		1				INSTALL SIGN & POST
6-4	W1-8	CHEVRON	18" X 24"	3.00		1				INSTALL SIGN & POST
6-5	R1-1	STOP	30" X 30"	5.18		1		1	1	REPLACE EXISTING SIGN & POST
6-6	MR1-99	RUSTIC ROAD	24" X 24"	4.00			1	3	1	REPLACE EXISTING SIGN & POST
	MR4-53	R1	24" X 8"	1.33						
	M6-1	ARROW	21" X 21"	3.06						
6-7	R1-1	STOP	30" X 30"	5.18		1		1	1	REPLACE EXISTING SIGN & POST
6-8	W1-4R	REVERSE CURVE RIGHT	30" X 30"	6.25			1	2	1	REPLACE EXISTING SIGN & POST
	W13-1	45 MPH	18" X 18"	2.25						
6-9	MR2-1	JCT	21" X 15"	2.19			1	2	1	REPLACE EXISTING SIGN & POST
	MR1-99	RUSTIC ROAD	24" X 24"	4.00						
6-10		CAMP FOREST SPRINGS ARROW								REMAINS
6-11	MR1-99	RUSTIC ROAD	24" X 24"	4.00			1	3	1	REPLACE EXISTING SIGN & POST
	MR4-53	R1	24" X 8"	1.33						
	M6-1	ARROW	21" X 21"	3.06						
6-12	W1-7	LARGE ARROW	48" X 24"	8.00		1		1	1	REPLACE EXISTING SIGN & POST
6-13	W1-8	CHEVRON	18" X 24"	3.00		1				INSTALL SIGN & POST
6-14	W1-8	CHEVRON	18" X 24"	3.00		1				INSTALL SIGN & POST
6-15	W1-8	CHEVRON	18" X 24"	3.00		1				INSTALL SIGN & POST
6-16	W1-8	CHEVRON	18" X 24"	3.00		1				INSTALL SIGN & POST

PERMANENT SIGNING (CONTINUED)

SIGN GROUP CODE	SIGN CODE	MESSAGE	SIZE	SIGNS REFLECTIVE TYPE II 637.0202 SF	POSTS WOOD 4X6-INCH 12-FT 634.0612 EACH	POSTS WOOD 4X6-INCH 14-FT 634.0614 EACH	POSTS WOOD 4X6-INCH 16-FT 634.0616 EACH	REMOVING SIGNS TYPE II 638.2602 EACH	REMOVING SMALL SIGN SUPPORTS 636.3000 EACH	REMARKS
6-17		CAMP FOREST SPRINGS ARROW								REMAINS
6-18	W1-8	CHEVRON	18" X 24"	3.00		1				INSTALL SIGN & POST
6-19	W1-8	CHEVRON	18" X 24"	3.00		1				INSTALL SIGN & POST
6-20	W1-8	CHEVRON	18" X 24"	3.00		1				INSTALL SIGN & POST
6-21	W1-8	CHEVRON	18" X 24"	3.00		1				INSTALL SIGN & POST
6-22	W1-8	CHEVRON	18" X 24"	3.00		1				INSTALL SIGN & POST
6-23	MR2-1	JCT	21" X 15"	2.19			1	2	1	REPLACE EXISTING SIGN & POST
	MR1-99	RUSTIC ROAD	24" X 24"	4.00						
6-24	W1-8	CHEVRON	18" X 24"	3.00		1				INSTALL SIGN & POST
6-25	W1-8	CHEVRON	18" X 24"	3.00		1				INSTALL SIGN & POST
6-26	W1-8	CHEVRON	18" X 24"	3.00		1				INSTALL SIGN & POST
6-27	W1-8	CHEVRON	18" X 24"	3.00		1				INSTALL SIGN & POST
6-28	W1-8	CHEVRON	18" X 24"	3.00		1				INSTALL SIGN & POST
6-29	W1-8	CHEVRON	18" X 24"	3.00		1				INSTALL SIGN & POST
6-30	W1-8	CHEVRON	18" X 24"	3.00		1				INSTALL SIGN & POST
6-31	W1-8	CHEVRON	18" X 24"	3.00		1				INSTALL SIGN & POST
7-1	W1-4R	REVERSE CURVE RIGHT	30" X 30"	6.25			1	2	1	REPLACE EXISTING SIGN & POST
	W13-1	45 MPH	18" X 18"	2.25						
7-2	W1-4R	REVERSE CURVE RIGHT	30" X 30"	6.25			1	2	1	REPLACE EXISTING SIGN & POST
	W13-1	45 MPH	18" X 18"	2.25						
7-3	W1-8	CHEVRON	18" X 24"	3.00		1				INSTALL SIGN & POST
7-4	W1-8	CHEVRON	18" X 24"	3.00		1				INSTALL SIGN & POST
7-5	W1-8	CHEVRON	18" X 24"	3.00		1				INSTALL SIGN & POST
7-6	W1-8	CHEVRON	18" X 24"	3.00		1				INSTALL SIGN & POST
7-7	W1-8	CHEVRON	18" X 24"	3.00		1				INSTALL SIGN & POST
7-8	W1-8	CHEVRON	18" X 24"	3.00		1				INSTALL SIGN & POST
7-9	W1-8	CHEVRON	18" X 24"	3.00		1				INSTALL SIGN & POST
7-10	W1-8	CHEVRON	18" X 24"	3.00		1				INSTALL SIGN & POST
7-11	W1-8	CHEVRON	18" X 24"	3.00		1				INSTALL SIGN & POST
7-12	W1-8	CHEVRON	18" X 24"	3.00		1				INSTALL SIGN & POST
7-13	W1-8	CHEVRON	18" X 24"	3.00		1				INSTALL SIGN & POST
7-14	W1-8	CHEVRON	18" X 24"	3.00		1				INSTALL SIGN & POST
7-15	W1-8	CHEVRON	18" X 24"	3.00		1				INSTALL SIGN & POST
7-16	W1-8	CHEVRON	18" X 24"	3.00		1				INSTALL SIGN & POST
7-17	W1-8	CHEVRON	18" X 24"	3.00		1				INSTALL SIGN & POST
7-18	W1-8	CHEVRON	18" X 24"	3.00		1				INSTALL SIGN & POST
8-1	W1-8	CHEVRON	18" X 24"	3.00		1				INSTALL SIGN & POST
8-2	W1-8	CHEVRON	18" X 24"	3.00		1				INSTALL SIGN & POST
8-3		ICE AGE TRAIL 500 FEET								REMAINS
8-4	W1-8	CHEVRON	18" X 24"	3.00		1				INSTALL SIGN & POST
8-5	W1-8	CHEVRON	18" X 24"	3.00		1				INSTALL SIGN & POST
8-6	W1-8	CHEVRON	18" X 24"	3.00		1				INSTALL SIGN & POST
8-7	W1-8	CHEVRON	18" X 24"	3.00		1				INSTALL SIGN & POST
8-8	W1-8	CHEVRON	18" X 24"	3.00		1				INSTALL SIGN & POST
8-9	W1-8	CHEVRON	18" X 24"	3.00		1				INSTALL SIGN & POST
8-10	W1-8	CHEVRON	18" X 24"	3.00		1				INSTALL SIGN & POST
8-11	W1-8	CHEVRON	18" X 24"	3.00		1				INSTALL SIGN & POST
8-12	W1-8	CHEVRON	18" X 24"	3.00		1				INSTALL SIGN & POST
8-13	W1-8	CHEVRON	18" X 24"	3.00		1				INSTALL SIGN & POST
8-14	W1-8	CHEVRON	18" X 24"	3.00		1				INSTALL SIGN & POST
8-15	W1-8	CHEVRON	18" X 24"	3.00		1				INSTALL SIGN & POST
8-16	W1-8	CHEVRON	18" X 24"	3.00		1				INSTALL SIGN & POST
8-17	W1-8	CHEVRON	18" X 24"	3.00		1				INSTALL SIGN & POST
8-18		CURVE RIGHT						2	1	REMOVE EXISTING SIGN & POST
		45 MPH								
8-19	W1-4R	REVERSE CURVE RIGHT	30" X 30"	6.25			1	2	1	REPLACE EXISTING SIGN & POST
	W13-1	45 MPH	18" X 18"	2.25						
8-20		ICE AGE NATIONAL SCENIC TRAIL								REMAINS
8-21		ICE AGE TRAIL 500 FEET								REMAINS
8-22		ICE AGE TRAIL ACCESS AND PARKING ARROW								REMAINS
9-1	R1-1	STOP	30" X 30"	5.18		1		1	1	REPLACE EXISTING SIGN & POST
9-2		ICE AGE TRAIL ACCESS AND PARKING ARROW								REMAINS
		RIB LAKE X-COUNTRY SKIING								REMAINS
9-3	W2-2	SIDE ROAD RIGHT	30" X 30"	6.25			1	1	1	REPLACE EXISTING SIGN & POST
9-4	W2-2	SIDE ROAD LEFT	30" X 30"	6.25			1	1	1	REPLACE EXISTING SIGN & POST
9-5		CURVE LEFT						2	1	REMOVE EXISTING SIGN & POST
		45 MPH								
9-6	R1-1	STOP	30" X 30"	5.18		1		1	1	REPLACE EXISTING SIGN & POST

3

PERMANENT SIGNING (CONTINUED)

SIGN GROUP CODE	SIGN CODE	MESSAGE	SIZE	SIGNS REFLECTIVE TYPE II 637.0202 SF	POSTS WOOD 4X6-INCH 12-FT 634.0612 EACH	POSTS WOOD 4X6-INCH 14-FT 634.0614 EACH	POSTS WOOD 4X6-INCH 16-FT 634.0616 EACH	REMOVING SIGNS TYPE II 638.2602 EACH	REMOVING SMALL SIGN SUPPORTS 636.3000 EACH	REMARKS
10-1	W3-5	SPEED LIMIT AHEAD 25	36" X 36"	9.00			1			INSTALL SIGN & POST
		REDUCED SPEED AHEAD						2	1	REMOVE EXISTING SIGN & POST
		25 MPH								
10-2	R1-1	STOP	30" X 30"	5.18		1		1	1	REPLACE EXISTING SIGN & POST
10-3	R2-1	SPEED LIMIT 55	24" X 30"	5.00		1		1	1	REPLACE EXISTING SIGN & POST
10-4		SCHOOL DISTRICT OF RIB LAKE								REMAINS
10-5		NO ENGINE BRAKING EXCEPT IN EMERGENCY								REMAINS
10-6	R2-1	SPEED LIMIT 35	24" X 30"	5.00		1		1	1	REPLACE EXISTING SIGN & POST
10-7	S1-1	SCHOOL	30" X 30"	6.75		1		2	1	REPLACE EXISTING SIGN & POST
	W16-9P	AHEAD	24" X 8"	1.33						
10-8		NO PARKING ON ANY STREET FROM 2 AM TO 7 AM NOV 1 TO APRIL 1								REMAINS
10-9		SCHOOL ENTRANCE								REMAINS
10-10		NEIGHBORHOOD WATCH								REMAINS
11-1		SCHOOL ENTRANCE								REMAINS
11-2	R2-1	SPEED LIMIT 25	24" X 30"	5.00		1		1	1	REPLACE EXISTING SIGN & POST
11-3	R7-1L	NO PARKING ANYTIME ARROW	24" X 30"	5.00		1		1	1	REPLACE EXISTING SIGN & POST
11-4	R7-1D	NO PARKING ANYTIME ARROW	24" X 30"	5.00		1		1	1	REPLACE EXISTING SIGN & POST
11-5	R7-1R	NO PARKING ANYTIME ARROW	24" X 30"	5.00		1		1	1	REPLACE EXISTING SIGN & POST
11-6	R2-1	SPEED LIMIT 25	24" X 30"	5.00		1		1	1	REPLACE EXISTING SIGN & POST
11-7	R14-1	TRUCK ROUTE						2	1	REMOVE EXISTING SIGN & POST
	M6-1	ARROW								
11-8	R1-1	STOP	30" X 30"	5.18		1		1	1	REPLACE EXISTING SIGN & POST
11-9		SCHOOL DISTRICT OF RIB LAKE								REMAINS
11-10	R14-1	TRUCK ROUTE	24" X18"	3.00			1	2	1	REPLACE EXISTING SIGN & POST
	M6-1	ARROW	21" X 21"	3.06						
11-11	S1-1	SCHOOL	30" X 30"	6.75			1	2	1	REPLACE EXISTING SIGN & POST
	W16-9P	AHEAD	24" X 8"	1.33						
11-12	R2-1	SPEED LIMIT 35	24" X 30"	5.00		1		1	1	REPLACE EXISTING SIGN & POST
11-13	R14-1	TRUCK ROUTE	24" X18"	3.00			1			INSTALL SIGN & POST
	M6-1	ARROW	21" X 21"	3.06						
11-14	R1-1	STOP	30" X 30"	5.18		1		1	1	REPLACE EXISTING SIGN & POST
11-15	R1-1	STOP	30" X 30"	5.18		1		1	1	REPLACE EXISTING SIGN & POST
ITEM TOTALS				520	4	80	29	82	63	

3

FIELD OFFICE TYPE B

STATION	LOCATION	642.5001 EACH
CTH D		
100+62.92 - 419+73.85	LT & RT	1
ITEM TOTAL		1

TRAFFIC CONTROL

STATION	LOCATION	643.0100 EACH	643.0420 BARRICADES TYPE III DAYS	643.0705 WARNING LIGHTS TYPE A DAYS	643.0900 SIGNS DAYS
CTH D					
100+62.92 - 419+73.85	LT & RT	1	2314	4628	4628
ITEM TOTALS		1	2314	4628	4628

TRAFFIC CONTROL DETOUR

STATION	LOCATION	643.2000 EACH	643.0420 BARRICADES TYPE III DAYS	643.0705 WARNING LIGHTS TYPE A DAYS	643.3000 DETOUR SIGNS DAYS
CTH D					
100+62.92 - 419+73.85	LT & RT	1	1246	2492	5073
ITEM TOTALS		1	1246	2492	5073

GEOTEXTILE FABRIC

STATION	LOCATION	645.0125 TYPE MS SY	646.0130 TYPE R SY
CTH D			
179+50 - 182+00	LT & RT	2225	
185+00 - 191+50	LT	2890	
186+50 - 191+00	RT	2000	
196+00 - 197+50	LT	670	
200+50 - 207+00	LT	2890	
200+50 - 207+50	LT & RT	6225	
208+50 - 213+50	RT	2225	
210+25 - 213+50	LT	1445	
222+50 - 224+50	LT	890	
228+50 - 231+00	LT	1115	
343+32	LT		30
343+75	RT		30
ITEM TOTALS		22575	60

PAVEMENT MARKING

STATION	LOCATION	646.0106 EPOXY 4-INCH LF	647.0566 STOP LINE EPOXY 18-INCH LF	REMARKS
CTH D				
100+62.92 - 419+73.85	LT & RT	63822		WHITE EDGE
100+62.92 - 419+73.85	~	63822		DOUBLE YELLOW
SIDE ROADS				
LEONARD LANE	LT		11	
OLD RD 13	RT		20	
LUCIA ROAD	LT		15	
HILLS LANE	RT		15	
WALTERS LANE	RT		15	
OLAH DRIVE	RT		26	
RUSTIC ROAD 1	LT		15	
HARPER DRIVE	RT		18	
PATRICK DRIVE	RT		11	
MEYER ROAD	LT		11	
NORTH STREET	RT		11	
LITTLE RIB ROAD	RT		13	
ITEM TOTALS		127644	181	

CONSTRUCTION STAKING

STATION	LOCATION	650.4500 SUBGRADE LF	650.5000 BASE LF	650.6000 PIPE CULVERTS EACH	650.8000 RESURFACING REFERENCE LF	650.9910 SUPPLEMENTAL CONTROL (PROJECT) LS	650.9920 SLOPE STAKES LF
CTH D							
100+62.92 - 419+73.85	LT & RT				31831	1	31831
100+62.92 - 111+00	LT & RT	1037	1037				
171+25 - 181+45	LT & RT	1020	1020				
117+62.3				1			
133+78.2				1			
136+07.6				1			
147+63.4				1			
157+10.5				1			
162+44.6				1			
164+86.5				1			
176+49				1			
180+43.7				1			
189+51.0				1			
196+62.5				1			
203+67.4				1			
218+82.0				1			
223+14.9				1			
238+40.5				1			
248.03.0				1			
260+76.0				1			
292+60.5				1			
309+19.1				1			
316+47.0				1			
343+53.4				1			
343+64.3				1			
345+21.1				1			
359+65.5				1			
371+93.0				1			
DRIVEWAYS							
149+38.0				1			
208+59.9				1			
ITEM TOTALS		2057	2057	27	31831	1	31831

LOCATING NO-PASSING ZONES

STATION	LOCATION	648.0100 MI
CTH D		
100+62.92 - 419+73.85		6.04
ITEM TOTAL		6.04

SAWING

STATION	LOCATION	690.0150 ASPHALT LF
CTH D		
100+62.92	LT & RT	30
419+73.85	LT & RT	26
SIDE ROADS		
LEONARD LANE	LT & RT	22
OLD RD 13	LT & RT	30
LUCIA ROAD	LT & RT	20
HILLS LANE	LT & RT	20
WALTERS LANE	LT & RT	22
HARPER DRIVE	LT & RT	21
NORTH STREET	LT & RT	34
DRIVEWAYS		
394+79	LT	32
396+89	RT	28
398+15	RT	24
406+78	RT	19
ITEM TOTALS		328

GEOGRID

STATION	LOCATION	SPV.0180.01 SY
CTH D		
147+00 - 149+00	LT & RT	782
179+50 - 181+45	LT & RT	763
227+00 - 246+00	LT & RT	7431
253+50 - 255+00	LT & RT	587
267+50 - 271+50	LT & RT	1564
276+00 - 280+00	LT & RT	1564
287+00 - 293+00	LT & RT	2347
357+00 - 361+00	LT & RT	1564
ITEM TOTAL		16603

CONVENTIONAL SIGNS AND ABBREVIATIONS

A.P.	ACCESS POINT
AC	ACRES
AG	AGRICULTURAL
ALUM.	ALUMINUM
ANT	ANTENNA
B.	BARN
℄	CENTERLINE
CONC	CONCRETE
COR.	CORNER
C.S.M.	CERTIFIED SURVEY MAP
C.T.H.	COUNTY TRUNK HIGHWAY
DOC.	DOCUMENT
EASE.	EASEMENT
ET.AL.	AND OTHERS
FDN	FOUNDATION
FE	FIELD ENTRANCE
FRL.	FRACTIONAL
G	GARAGE
GP	GAS PUMPS
GRAV	GRAVEL
GV	GAS
HSE	HOUSE
IP	IRON PIPE OR PIN
L	LENGTH OF CURVE
LC	LONG CHORD OR LAND CONTRACT
LCB	LONG CHORD BEARING
LT	LEFT
MH	MANHOLE
MON.	MONUMENT
O.L.	OUTLOT
P.	PAGE
PC	POINT OF CURVATURE
PE	PRIVATE ENTRANCE
PI	POINT OF INTERSECTION
PK	PARKER-KALON FASTENER
P.L.	PROPERTY LINE
P.L.E.	PERMANENT LIMITED EASEMENT
PT	POINT OF TANGENCY
R	RADIUS OR RANGE
R.D.E.	RESTRICTED DEVELOPMENT EASEMENT
REM.	REMAINING
℟	REFERENCE LINE
RT	RIGHT
R/W	RIGHT OF WAY
S	SHED
SEC.	SECTION
SEPV	SEPTIC VENT
S.T.H.	STATE TRUNK HIGHWAY
STA.	STATION
T	TANGENT LENGTH OF CURVE OR TOWN
TAV	TAVERN
T.I.	TEMPORARY INTEREST
U.S.H.	UNITED STATES HIGHWAY
V.	VOLUME
W	WALL
X	EAST COORDINATE (GRID)
Y	NORTH COORDINATE (GRID)
N	NORTH COORDINATE (GROUND) OR NORTH
E	EAST COORDINATE (GROUND), EAST OR EXTERNAL
△	CENTRAL ANGLE OR DELTA

- STATE LINE
- COUNTY LINE
- TOWN OR RANGE LINE
- SECTION LINE
- QUARTER LINE
- SIXTEENTH LINE
- PROPOSED OR NEW R/W LINE
- EXISTING R/W LINE
- LOT LINE
- P.L. ± 58.1 PROPERTY LINE
- ACCESS RESTRICTED (By Previous Acquisition)
- ACCESS RESTRICTED (By Acquisition)
- ACCESS RESTRICTED (By Statutory Authority)
- LIMITED EASEMENT (Temporary or Permanent)
- CORPORATE LIMITS

- SECTION CORNER
- RIGHT OF WAY POINT (NOT MONUMENTED)
- RIGHT OF WAY POINT (MONUMENTED)
- (Type) RECOVERED IRON PIN/PIPE
- TRIANGULATION POINT OR HORIZONTAL CONTROL STATION
- INLET
- HYDRANT

COMPENSABLE	NON COMPENSABLE
	TELEPHONE POLE
	POWER POLE

- 243 RIGHT OF WAY POINT NUMBER

- (Size)W WATER
- (Size)G GAS
- T TELEPHONE OR TELEGRAPH
- E ELECTRIC
- TV CABLE TELEVISION
- FO FIBER OPTIC
- (Size)SAN SANITARY SEWER
- (Size)SS STORM SEWER
- CAUTION NOTATION FOR COMBUSTIBLE FLUIDS
- SERVICE PEDESTAL
- (Label) SILO, MANHOLE OR WELL, ETC.

- RAILROAD
- BRIDGE
- (Label) BUILDING
- (Label) FOUNDATION OR RUINS
- FENCE
- MARSH AREA
- LAKE OR POND
- WOODED OR SHRUB AREA
- TREE

R/W PROJECT NUMBER	SHEET NUMBER	TOTAL SHEETS
8900-06-06		
FEDERAL PROJECT NUMBER	4.01	6

PLAT OF RIGHT-OF-WAY REQUIRED FOR

WESTBORO - RIB LAKE

(BUSINESS 13 SOUTH TO WELL STREET)

CTH D — TAYLOR COUNTY

CONSTRUCTION PROJECT NUMBER
8900-06-76

BEGIN RELOCATION ORDER
STA. 131+83.73
Y= 417,077.236
X= 664,998.389
6.063 FEET NORTH AND 1588.847 FEET EAST OF THE SOUTHWEST CORNER OF SECTION 7, T33N, R2E

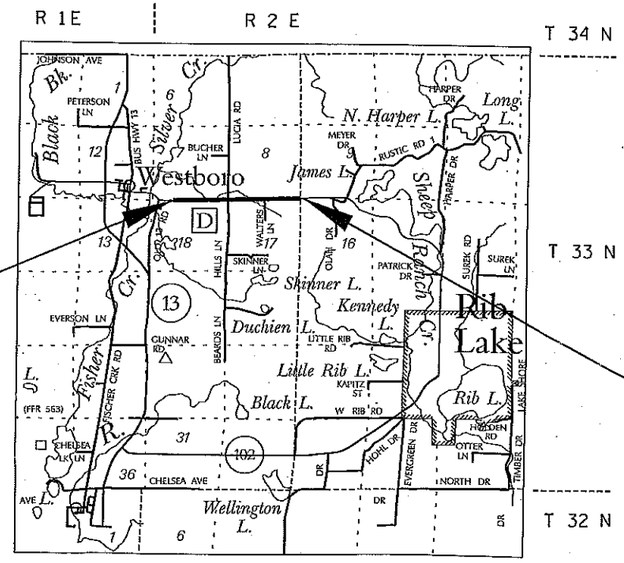

END RELOCATION ORDER
STA. 225+00.19
Y= 417,280.451
X= 674,311.571
1.383 FEET NORTH AND 0.025 FEET EAST OF THE SOUTHEAST CORNER OF SECTION 8, T33N, R2E

NOTES:

COORDINATES AND BEARINGS ON THIS PLAT ARE ORIENTED TO THE WISCONSIN COUNTY COORDINATE SYSTEM, TAYLOR COUNTY (ENGLISH) NAD 83, 1991 ADJUSTMENT. ALL DISTANCES ARE GROUND LENGTH.

RIGHT OF WAY MONUMENTS ARE TYPE-2 (5/8" X 24" REINFORCEMENT BAR WEIGHING 1.04 lb/FT) AND ARE PLACED PRIOR TO OR AT THE TIME OF LAND TITLE TRANSFER.

RIGHT OF WAY BOUNDARIES ARE DEFINED WITH COURSES OF THE PERIMETER OF THE HIGHWAY LANDS REFERENCED TO THE U.S. PUBLIC LAND SURVEY OR OTHER SURVEYS OF PUBLIC RECORD.

LAYOUT
SCALE 0 1 MI.

TOTAL NET LENGTH OF CENTERLINE = 1.764 MI.

ORIGINAL PLANS PREPARED BY

SEH

WISCONSIN
JASON L. CANCE
S-2688
CHIPPEWA FALLS WI
LAND SURVEYOR

12/19/2012 (Date) (Signature)

REVISION DATE	ACCEPTED FOR
2-11-13 J.S.	COUNTY of TAYLOR
	12-20-12 (Date) Hwy Commissioner (Signature & Title of Offi)

WISDOT/CADDS SHEET 50

FILE NAME : P:\PT\T\Tayhd\108326\CAD\RTCTHD00.dgn PLOT TIME : 2:55:38 PM PLOT DATE : 12/19/2012 PLOT BY : SEH PLOT NAME : PLOT SCALE : N/A

SCHEDULE OF LANDS & INTERESTS REQUIRED

AREAS SHOWN IN THE TOTAL ACRES COLUMN MAY BE APPROXIMATE AND ARE DERIVED FROM TAX ROLLS OR OTHER AVAILABLE SOURCES AND MAY NOT INCLUDE LANDS OF THE OWNER WHICH ARE NOT CONTIGUOUS TO THE AREA TO BE ACQUIRED.

OWNER'S NAMES ARE SHOWN FOR REFERENCE PURPOSES ONLY AND ARE SUBJECT TO CHANGE PRIOR TO THE TRANSFER OF LAND INTERESTS TO THE COUNTY

PARCEL NUMBER	SHEET NUMBER	OWNER (S)	INTEREST REQUIRED	TOTAL ACRES	R&W ACRES REQUIRED NEW	EXISTING	TOTAL	TOTAL ACRES REM.	TLE ACRES
1	4.3	JOHN A. & VICKI L. WOJCIK	FEE	41.65	0.19	0.72	0.91	40.74	-
3	4.3	MICHAEL S. DRACKLEY	FEE	5.00	-	0.26	0.26	4.74	-
4	4.3	TODD J. & LISA A. PECHE	FEE	3.00	-	0.27	0.27	2.73	-
5	4.3	CLAYTON W. & THERESA M. KEENE	FEE	22.50	-	0.10	0.10	22.40	-
6	4.3 & 4.4	JEFFREY P. REISCHEL	FEE	3.75	-	0.34	0.34	3.41	-
7	4.4	TRACY A. SACKMAN	FEE	29.35	-	0.71	0.71	28.64	-
8	4.4	RUSSELL D. BLENNERT	FEE	12.00	-	0.55	0.55	11.45	-
9	4.4	GERALDINE SPANBAUER	FEE	39.02	-	0.81	0.81	38.21	-
10	4.4	LINDA ANN NOZISKA	FEE	2.00	0.01	0.19	0.20	1.80	-
11	4.4	MICHAEL JOHN OUEDNOW	FEE / TLE	36.08	0.12	0.88	1.00	35.08	0.01
12	4.4	NORTHERN NATURAL GAS COMPANY	TLE	0.17	-	-	-	0.17	0.04
13	4.4	TRACY A. OCHODNICKY & TAMMY J. OCHODNICKY	FEE	38.90	0.20	0.94	1.14	37.76	-
14	4.4	SHERYL A. KENNEY	FEE / TLE	1.10	-	0.19	0.19	0.91	0.01
16	4.5	JACQUALINE F. MIICKE & SHYRLEE D. PUTMAN	FEE / TLE	40.12	0.32	1.01	1.33	38.79	0.04
17	4.5	DELBERT R. & NANCY L. KROEKER	FEE	39.75	0.58	1.01	1.59	38.16	-
18	4.5	JOHN H. & IRENE C. PIPKORN	FEE	40.00	0.10	1.01	1.11	38.89	-
19	4.5	DANNY J. PIPKORN	FEE	40.00	0.22	1.01	1.23	38.77	-
21	4.6	FRANCIS C. & LORI A. DUMS	FEE	14.66	0.19	0.37	0.56	14.10	-
22	4.6	RUESCH LIVING TRUST DATED 6/17/97	FEE	24.45	0.20	0.63	0.83	23.62	-
23	4.6	ROBERT H. PRIGGE TRUST NO. 1 & SHIRLEY I. PRIGGE TRUST NO. 1	FEE	39.11	0.36	1.00	1.36	37.75	-
24	4.6	ROY L. & JOAN R. POINTS	FEE	39.08	0.10	1.00	1.10	37.98	-
25	4.6	THEODORE A. & DAWN THUMS	FEE	40.00	0.11	1.00	1.11	38.89	-
30	4.3, 4.4, 4.5	FRONTIER COMMUNICATIONS	RELEASE OF RIGHTS						
40	4.3, 4.4	NORTHERN NATURAL GAS COMPANY	RELEASE OF RIGHTS						
50	4.4, 4.5, 4.6	PRICE ELECTRIC COOPERATIVE INC.	RELEASE OF RIGHTS						

PROPOSED RIGHT OF WAY COORDINATE TABLE								
Point	Y	X	Point	Y	X	Point	Y	X
300	417121.18	664975.85	339	417217.35	669610.96	378	417313.07	673811.29
301	417102.54	665081.49	340	417255.52	670010.46	379	417334.69	674060.65
302	417016.19	664976.00	341	417233.49	670111.47	380	417338.89	674259.68
303	417036.55	665071.09	342	417237.34	670311.71	381	417311.71	674285.41
304	417114.21	665409.98	343	417269.00	670411.20	382	417312.08	674312.14
305	417119.21	665410.02	344	417280.15	670910.70	383	417246.06	674311.18
306	417119.00	665435.02	345	417254.05	671011.15	384	417244.68	674212.25
307	417114.00	665434.98	346	417264.11	671325.99	385	417235.46	674112.14
308	417048.81	666590.32	347	417301.64	671510.00	386	417241.88	674011.77
309	417069.62	664998.42	348	417279.49	671611.22	387	417235.28	673539.12
310	417117.24	664998.23	349	417282.64	671710.48	388	417229.87	673412.11
311	417117.08	665069.32	350	417209.76	671711.34	389	417213.30	673312.36
312	417111.65	665714.97	351	417209.28	671676.48	390	417226.72	673212.14
313	417101.92	665714.89	352	417208.28	671645.34	391	417225.14	673112.15
314	417101.71	665937.35	353	417181.68	671513.39	392	417213.56	673012.32
315	417101.61	666033.27	354	417198.13	671327.85	393	417225.13	672811.79
316	417035.61	666034.22	355	417187.50	670995.25	394	417216.76	672212.42
317	417035.71	665936.78	356	417165.18	670913.32	395	417209.88	672182.81
318	417036.55	665071.09	357	417175.29	670613.01	396	417205.77	672012.72
319	417021.03	664998.61	358	417163.06	670230.28	397	417198.36	671912.87
320	417106.77	666206.87	359	417153.52	670113.52	398	417043.81	666590.44
321	417139.48	667307.28	360	417150.58	670013.95	399	417043.30	666570.45
322	417157.05	667898.18	361	417152.95	669914.16	400	417048.30	666570.32
323	417189.23	668980.73	362	417146.88	669914.41	401	417161.49	668047.42
324	417190.18	669012.81	363	417144.98	669664.63	402	417169.44	668047.12
325	417124.21	669014.85	364	417131.34	669492.56	403	417170.19	668067.11
326	417123.24	668982.10	365	417123.55	669315.00	404	417162.08	668067.41
327	417107.86	668464.70	366	417129.00	669164.62	405	417085.24	668070.27
328	417096.22	668365.07	367	417125.28	669048.07	406	417080.25	668070.45
329	417078.93	667900.55	368	417296.18	671821.48	407	417079.50	668050.47
330	417080.93	667900.48	369	417299.86	672180.63	408	417084.50	668050.28
331	417067.09	667309.05	370	417303.39	672409.74	409	417095.10	668335.08
332	417046.90	666515.35	371	417294.06	672511.32	410	417090.11	668335.27
333	417049.91	666515.27	372	417296.50	672881.23	411	417089.36	668315.28
334	417040.80	666208.55	373	417308.55	673010.82	412	417094.36	668315.10
335	417191.27	669046.73	374	417310.13	673110.81	413	417299.52	671435.03
336	417199.73	669311.66	375	417296.71	673211.03	414	417179.56	671438.42
337	417205.67	669361.45	376	417299.50	673411.01	415	417160.63	670713.36
338	417211.26	669488.81	377	417311.88	673538.34	416	417211.33	671823.85

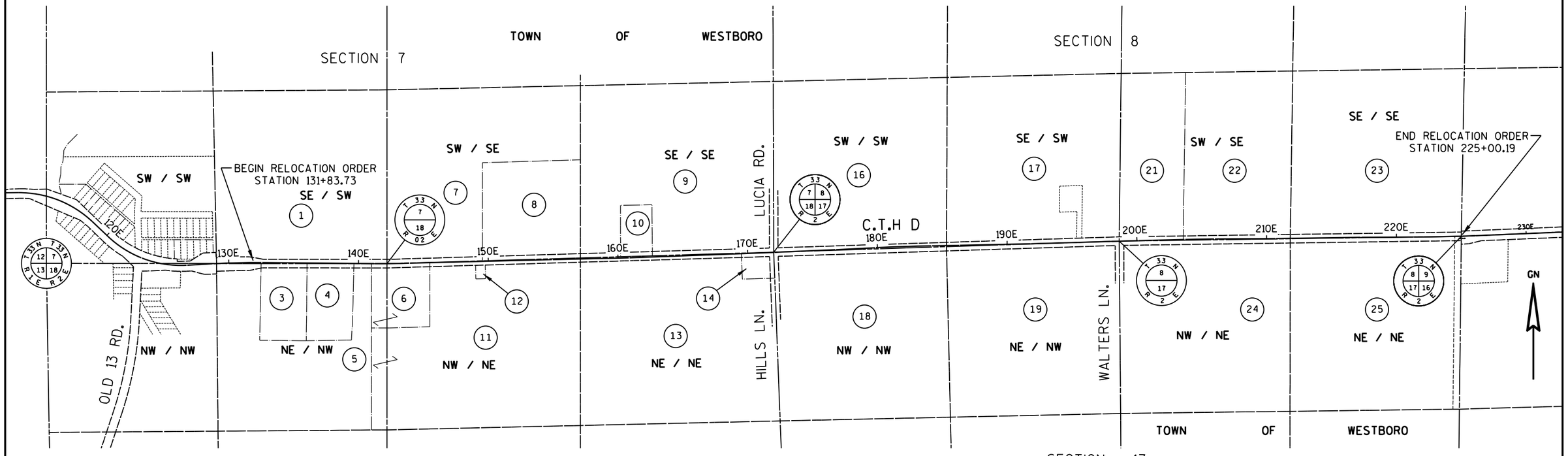

REVISION DATE 2-7-13	DATE 12/19/2012	SCALE, FEET 0 N/A	HWY: CTH D	STATE R/W PROJECT NUMBER 8900-06-06	PLAT SHEET NO: 4.02	
			COUNTY: TAYLOR	CONSTRUCTION PROJECT NUMBER 8900-06-76	PS&E SHEET 43	E

FILE NAME : P:\PT\T\Tayhd\108326\CAD\RSCTHD00.dgn PLOT TIME : 11:20:53 AM PLOT DATE : 3/5/2013 PLOT BY : SEH PLOT NAME : PLOT SCALE : N/A

WISDOT/CADDS SHEET 60

COURSE TABLE		
POINTS	BEARING	DISTANCE
919-309	N 89° 56'39" W	1035.33'
309-310	N 00° 13'27" W	47.61'
310-311	S 89° 52'18" E	71.09'
311-304	S 89° 31'07" E	340.67'
304-305	N 00° 28'53" E	5.00'
305-306	S 89° 31'07" E	25.00'
306-307	S 00° 28'53" W	5.00'
307-312	S 89° 31'07" E	280.00'
312-313	S 00° 28'53" W	9.73'
313-314	S 89° 56'39" E	222.46'
314-315	S 89° 56'39" E	95.93'
315-320	N 88° 17'51" E	173.68'
320-334	S 01° 27'27" E	66.00'
334-316	S 88° 17'51" W	174.41'
316-317	N 89° 56'39" W	97.44'
317-318	N 89° 56'39" W	865.69'
318-319	S 77° 54'37" W	74.13'
319-309	N 00° 13'27" W	48.60'

GN

SECTION LINE

SW / SW
7-33-2E

TOWN OF WESTBORO

SE / SW
7-33-2E

1/16 LINE

1/4 LINE

PL

PI 115+49.38E

115E

PI 118+46.00E

PT 118+46.00E

CTH D

120E

PC 120+11.01E

PT 126+77.19E

PI 130+66.62
Y =417078.656
X =664881.145
DELTA =3°45'20" (RT)
R =5729.58
D =1°00'00"
T =187.85
L =375.56

PI 130+66.62E

1

JOHN A. & VICKI L. WOJCIK
044-01030-0000

40

NORTHERN NATURAL GAS COMPANY
(AMBIGUOUS EASEMENT)
DOC. # 171640

FRONTIER COMMUNICATIONS

30

SLOPE INTERCEPTS

P.K. NAIL
STA 142+19.12E
0.94' RT.
Y=417,068.614
X=666,033.748

T 33 N
R 2 E
7
18
02
919

FND. 2" IP
Y=417,071.173
X=663,409.542

T 33 N
R 1 E
12
13
7
18
918

PI 24+86.21B

25B

PT 25+19.53B

PRC 24+52.44B

PI 123+63.80E

PI 23+67.40B

PC 22+82.29B

125E

R= N 86°43'33" E

130E

135E

CTH D

R= S 89°31'07" E

140E

SECTION LINE = S89°56'39"E 2624.21'

PC 128+78.77E

PT 132+54.33E

PC 141+22.45E
31.93'

PI 142+57.81E

131+83.73E
40'

132+54.33E
40'

135+95E
45'-40"

136+20E
45'-40"

139+00E
40'-30.27"

142+18.76E
32.06'

131+83.73E
56.21'

132+56.77E
40.51'

141+22.44E
34.07'

142+19.47E
33.94'

105'

40'

69'

66'

320

334

99'

RIGHT OF WAY POINTS 315 & 316 ARE NOT LOCATED ON THE 1/4 LINE

BEGIN RELOCATION ORDER
STA. 131+83.73
Y= 417,077.236
X= 664,998.389

3

MICHAEL S. DRACKLEY
044-01083-0002

4

TODD J. & LISA A. PECHE
044-01083-0004

6

JEFFREY P. REISCHEL
044-01077-0000

AMBIGUOUS EASEMENT TO PRICE ELECTRIC COOPERATIVE INC. VOL. 4, PG. 142, DOC. # 227530

AMBIGUOUS EASEMENT TO SUPERIOR DISTRICT POWER COMPANY VOL. 185, PG. 492, DOC. # 230606

AMBIGUOUS EASEMENT TO SUPERIOR DISTRICT POWER COMPANY VOL. 185, PG. 601, DOC. # 230687

NW / NW
18-33-2E

NE / NW
18-33-2E

5

CLAYTON W. & THERESA M. KEENE
044-01083-0001

AMBIGUOUS EASEMENT TO PRICE ELECTRIC COOPERATIVE INC. VOL. AY, PG. 625, DOC. # 218083

EXISTING RIGHT OF WAY BASED ON PROJECT # 8900-5-71 & OLD TOWN ROAD RECORDS IN COUNTY SURVEYOR'S OFFICE

REVISION DATE 2-7-13 N.C.	DATE 12/19/2012	SCALE, FEET 0 100 200	HWY: CTH D	STATE R/W PROJECT NUMBER 8900-06-06	PLAT SHEET NO: 4.03
	GRID FACTOR N/A		COUNTY: TAYLOR	CONSTRUCTION PROJECT NUMBER 8900-06-76	PS&E SHEET 44 E

COURSE TABLE		
POINTS	DIRECTION	DISTANCE
919-315	N 00° 49' 24" W	33.00'
315-320	N 88° 17' 51" E	173.68'
320-321	N 88° 17' 51" E	1100.89'
321-322	N 88° 17' 51" E	591.16'
322-401	N 88° 17' 51" E	149.30'
401-402	N 02° 07' 54" W	7.96'
402-403	N 87° 52' 06" E	20.00'
403-404	S 02° 07' 54" E	8.11'
404-323	N 88° 17' 51" E	913.73'
323-324	N 88° 17' 51" E	32.09'
324-335	N 88° 10' 10" E	33.93'
335-367	S 01° 10' 01" E	66.00'
367-325	S 88° 10' 10" W	33.24'
325-326	S 88° 17' 51" W	32.76'
326-327	S 88° 17' 51" W	517.63'
327-328	S 83° 20' 08" W	100.31'
328-409	S 87° 52' 06" W	30.00'
409-410	S 02° 07' 54" E	5.00'
410-411	S 87° 52' 06" W	20.00'
411-412	N 02° 07' 54" W	5.00'
412-405	S 87° 52' 06" W	245.00'
405-406	S 02° 07' 54" E	5.00'
406-407	S 87° 52' 06" W	20.00'
407-408	N 02° 07' 54" W	5.00'
408-329	S 87° 52' 06" W	149.84'
329-330	N 01° 44' 09" W	2.00'
330-331	S 88° 39' 37" W	591.60'
331-308	S 88° 32' 34" W	718.96'
308-398	S 01° 27' 26" E	5.00'
398-399	S 88° 32' 34" W	20.00'
399-400	N 01° 27' 26" W	5.00'
400-332	S 88° 32' 34" W	55.00'
332-333	N 01° 27' 26" W	3.01'
333-334	S 88° 17' 51" W	306.85'
334-316	S 88° 17' 51" W	174.41'
316-317	N 89° 56' 39" W	97.44'
317-314	N 00° 29' 25" E	66.00'
314-315	S 89° 56' 39" E	95.93'

TOWN OF WESTBORO

GN

SW / SE
7-33-2E

SE / SE
7-33-2E

NW / NE
18-33-2E

NE / NE
18-33-2E

1/4 LINE

1/16 LINE

PL

P.K. NAIL
STA 142+19.12E
0.94' RT.
Y=417,068.614
X=666,033.748

P.K. NAIL
STA. 172+00.58
1.80' LT.
Y=414,558.890
X=669,112.849

PI 142+57.81
Y =417068.645
X =666072.434
DELTA =1°56'20" (LT)
R =8000.00
D =0°42'58"
T =135.37
L =270.71

PI 172+01.53E =
37+50.00C
Y=417155.430
X=669014.844

172+05.53E =
37+50.00C
Y=417155.605
X=669018.836

PI 154+94.00E
Y=417100.085
X=667308.244
39.53'

PI 160+85.40E
Y=417113.912
X=667899.485
33°-35'

CTH D

LUCIA RD

HILLS LN

SEC. LINE = N88°17'51"E 2981.40'

R= N 88°32'34" E

R= N 88°39'37" E

R= N 87°52'06" E

R= N 01°16'55" E

R= N 01°54'17" W

TRACY A. SACKMAN
044-01034-0000

RUSSELL D. BLENNERT
044-01035-0001

LINDA ANN NOZISKA
044-01035-0001

GERALDINE SPANBAUER
044-01035-0002

JEFFREY P. REISCHEL
044-01077-0000

NORTHERN NATURAL GAS
044-01078-0001

MICHAEL JOHN OUEDNOW
044-01078-0002

FRONTIER COMMUNICATIONS

NORTHERN NATURAL GAS

TRACY A. & TAMMY J. OCHODNICKY
044-01075-0000

SHERYL A. KENNEY
044-01076-0000

PRICE ELECTRIC COOP
(AMBIGUOUS EASEMENT)
DOC. # 218819

PRICE ELECTRIC COOP
(AMBIGUOUS EASEMENT)
DOC. # 238079

PRICE ELECTRIC COOP
(AMBIGUOUS EASEMENT)
DOC. # 218813

PRICE ELECTRIC COOP
(AMBIGUOUS EASEMENT)
DOC. # 218813

NORTHERN NATURAL GAS COMPANY
(AMBIGUOUS EASEMENT)
DOC. # 171641

NORTHERN NATURAL GAS COMPANY
(AMBIGUOUS EASEMENT)
DOC. # 171642

NORTHERN NATURAL GAS COMPANY
(AMBIGUOUS EASEMENT)
DOC. # 171642

NORTHERN NATURAL GAS COMPANY
(AMBIGUOUS EASEMENT)
DOC. # 218813

BLANKET EASEMENT TO
RIB LAKE TELEPHONE COMPANY
VOL. 226, PG. 431, DOC. # 251231

BLANKET EASEMENT TO
RIB LAKE TELEPHONE COMPANY
VOL. 226, PG. 431, DOC. # 251231

AMBIGUOUS EASEMENT TO
PRICE ELECTRIC COOPERATIVE INC.
VOL. AZ, PG. 211 DOC. # 218819

MANAGED FOREST LANDS
DOCUMENT # 308400

AMBIGUOUS EASEMENT TO
NORTHERN NATURAL GAS COMPANY
VOL. A1, PG. 122 DOC. # 171641

SLOPE INTERCEPTS

SEE RIGHT OF WAY DETAIL

TLE FOR SLOPES
(0.01 AC.)

TLE FOR SLOPES
(0.04 AC.)

RIGHT OF WAY POINTS
315 & 316 ARE NOT
LOCATED ON THE 1/4 LINE

RIGHT OF WAY POINTS
324 & 325 ARE NOT
LOCATED ON THE SECTION LINE

EXISTING RIGHT OF WAY BASED
ON OLD TOWN ROAD RECORDS
IN COUNTY SURVEYOR'S OFFICE

RIGHT OF WAY DETAIL

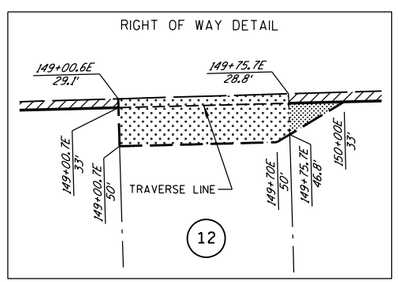

REVISION DATE 2-7-13	DATE 12/19/2012	SCALE, FEET 0 100 200	HWY: CTH D	STATE R/W PROJECT NUMBER 8900-06-06	PLAT SHEET NO: 4.04
	GRID FACTOR N/A		COUNTY: TAYLOR	CONSTRUCTION PROJECT NUMBER 8900-06-76	PS&E SHEET 45 E

FILE NAME : P:\PT\T\Tayhd\108326\CAD\RDCTHD02.dgn PLOT TIME : 11:09:06 AM PLOT DATE : 3/5/2013 PLOT BY : SEH PLOT NAME : PLOT SCALE : N/A

WISDOT/CADDS SHEET 75

COURSE TABLE		
POINTS	DIRECTION	DISTANCE
908-351	S 01° 18' 55" E	33.00'
351-352	S 88° 10' 10" W	31.16'
352-353	S 78° 36' 12" W	134.61'
353-414	S 88° 22' 51" W	75.00'
414-354	N 80° 27' 56" W	112.11'
354-355	S 88° 10' 10" W	332.77'
355-356	S 74° 45' 21" W	84.92'
356-415	S 88° 41' 52" W	200.00'
415-357	N 81° 41' 25" W	101.42'
357-358	S 88° 10' 10" W	382.93'
358-359	S 85° 19' 40" W	117.14'
359-360	S 88° 18' 42" W	99.62'
360-361	N 88° 38' 14" W	99.82'
361-363	S 88° 10' 10" W	249.65'
363-364	S 85° 28' 09" W	172.62'
364-365	S 87° 29' 17" W	177.73'
365-366	N 87° 55' 34" W	150.48'
366-367	S 88° 10' 10" W	116.61'
367-325	S 88° 10' 10" W	33.24'
325-326	S 88° 17' 51" W	32.76'
326-323	N 01° 11' 16" W	66.00'
323-324	N 88° 17' 51" E	32.09'
324-335	N 88° 10' 10" E	33.93'
335-336	N 88° 10' 10" E	265.07'
336-337	N 83° 12' 03" E	50.14'
337-338	N 87° 29' 17" E	127.49'
338-339	N 87° 08' 36" E	122.30'
339-340	N 84° 32' 32" E	401.31'
340-341	S 77° 41' 46" E	103.39'
341-342	N 88° 53' 50" E	200.27'
342-343	N 72° 21' 00" E	104.40'
343-344	N 88° 43' 17" E	499.63'
344-345	S 75° 26' 03" E	103.78'
345-346	N 88° 10' 10" E	315.00'
346-413	N 72° 00' 37" E	114.64'
413-347	N 88° 22' 51" E	75.00'
347-348	S 77° 39' 27" E	103.62'
348-349	N 88° 10' 45" E	99.30'
349-350	S 00° 40' 39" E	72.88'
350-351	S 89° 12' 00" W	34.86'

TOWN OF WESTBORO

GN

1/4 LINE

1/16 LINE

PL

SW / SW
8-33-2E

SE / SW
8-33-2E

NW / NW
17-33-2E

NE / NW
17-33-2E

P.K. NAIL
STA. 172+00.58
1.80' LT.
Y=414,558.890
X=669,112.849

T 33 N
R 2 E
7 8 18 17
907

LUCIA RD

40C

172+05.53E =
37+50.00C
Y=417155.605
X=669018.836

PI 182+01.17
Y =417202.388
X =670013.374
DELTA =1°54'21" (RT)
R =13000.00
D =0°26'27"
T =216.22
L =432.39

16
JACQUALINE F. MIICKE &
SHYRLEE D. PUTNAM
044-01047-0000

17
DELBERT R. & NANCY L.
KROEKER
044-01048-0000

PRICE
ELECTRIC
COOP
(AMBIGUOUS EASEMENT)
DOC. # 218817

PRICE
ELECTRIC
COOP
(AMBIGUOUS EASEMENT)
DOC. # 218816

FRONTIER
COMMUNICATIONS

TLE FOR SLOPES
(0.04 AC.)

SLOPE INTERCEPTS

P.K. NAIL
STA 198+63.98E
0.75'LT.
Y=417,242.369
X=671,675.724

PI 198+64.67E =
45+50.00D
Y=417241.540
X=671676.437

PI 200+11.19E

T 33 N
R 2 E
8 17
908

PT 45+03.54D
PI 44+66.61D
PRC 44+29.87D

RIGHT OF WAY POINT
351 IS NOT LOCATED
ON THE 1/4 LINE

PC 42+52.01D

PI 43+41.00D

PI 44+66.61D
Y =417158.176
X =671679.087
DELTA =2°46'10" (LT)
R =1520.03
D =3°46'10"
T =36.74
L =73.47

PI 43+41.00D
Y =417032.458
X =671677.006
DELTA =5°15'25" (RT)
R =1938.52
D =2°57'20"
T =88.99
L =177.86

PI 172+01.53E =
37+50.00C
Y=417155.430
X=669014.844

RIGHT OF WAY POINTS
324 & 325 ARE NOT
LOCATED ON THE SECTION LINE

HILLS LN

WALTERS LN

1/4 LINE

66'

CTH D

R= N 87°29'17" E
R= N 87°08'36" E
SEC. LINE = N88°10'10"E
R= N 89°02'57" E
R= N 88°41'52" E
R= N 88°22'51" E
R= N88°10'45" E
R=N01°49'14"W

175E
180E
185E
190E
195E
200E

PI 176+77.60E
Y=417176.295
X=669490.451

PC 179+84.95E

PT 184+17.35E

PI 186+33.89E
Y=417222.033
X=670046.619

PI 191+82.33E
Y=417222.033
X=670994.369

18
JOHN H. & IRENE C.
PIPKORN
044-01070-0000

19
DANNY J. PIPKORN
044-01069-0000

EXISTING RIGHT OF WAY BASED
ON OLD TOWN ROAD RECORDS
IN COUNTY SURVEYOR'S OFFICE

REVISION DATE 2-7-13 N.C.	DATE 12/19/2012	SCALE, FEET 0 100 200	HWY: CTH D	STATE R/W PROJECT NUMBER 8900-06-06	PLAT SHEET NO: 4.05
	GRID FACTOR N/A		COUNTY: TAYLOR	CONSTRUCTION PROJECT NUMBER 8900-06-76	PS&E SHEET 46 E

FILE NAME : P:\PT\T\Tayhd\108326\CAD\RDCTHD03.dgn PLOT TIME : 11:09:07 AM PLOT DATE : 3/5/2013 PLOT BY : SEH PLOT NAME : PLOT SCALE : N/A

TOWN OF WESTBORO

SW / SE
8-33-2E

SE / SE
8-33-2E

1/4 LINE

1/16 LINE

SECTION LINE

GN

(21) FRANCIS C. & LORI A. DUMS
044-01052-0000

(22) RUESCH LIVING TRUST
044-01052-0001

(23) ROBERT H. PRIGGE TRUST NO. 1 & SHIRLEY I PRIGGE TRUST NO. 1
044-01053-0000
MANAGED FOREST LANDS
DOC. # 323771
FOREST CROP LANDS
DOC. # 214545

(24) ROY L. & JOAN R. POINTS
044-01066-0000

(25) THEODORE A. & DAWN THUMS
044-01064-0000

(50) PRICE ELECTRIC COOP
(AMBIGUOUS EASEMENT)
DOC. # 307929 & DOC. # 218814

(50) PRICE ELECTRIC COOP
(AMBIGUOUS EASEMENT)
DOC. # 218814

(50) PRICE ELECTRIC COOP
(AMBIGUOUS EASEMENT)
DOC. # 219439

(50) PRICE ELECTRIC COOP
(AMBIGUOUS EASEMENT)
DOC. # 218813

MANAGED FOREST LANDS
DOC. # 314087

RIGHT OF WAY PREVIOUSLY ACQUIRED UNDER COUNTY PROJECT NUMBER 61.07

P.K. NAIL
STA 198+63.98E
0.75' LT.
Y=417,242.369
X=671,675.724

T 33 N
R 8 E
17 2

PI 200+11.19E
Y=417246.195
X=671822.879

PI 204+84.31E
Y =417257.631
X =672295.863
DELTA =1°00'23" (RT)
R =13000.00
D =0°26'27"
T =114.18
L =228.35

PI 210+70.08E
Y=417261.503
X=672881.625

PI 217+27.29E
Y=417271.877
X=673538.748

PC 221+32.75E

PI 223+71.31E

PT 205+98.48E

PC 203+70.13E

PT 45+03.34D
PI 44+66.61D
PRC 44+29.87D
PI 43+41.00D
PC 42+52.01D

PI 198+64.67E = 45+50.00D
Y=417241.540
X=671676.437

WALTERS LN

PI 43+41.00D
Y =417032.458
X =671677.006
DELTA =5°15'25" (RT)
R =1938.52
D =2°57'20"
T =88.99
L =177.86

PI 44+66.61D
Y =417158.176
X =671679.087
DELTA =2°46'10" (LT)
R =1520.03
D =3°46'10"
T =36.74
L =73.47

NW / NE
17-33-2E

NE / NE
17-33-2E

R= N 88°36'54" E
R= N 89°37'17" E
R= N 89°05'44" E
R= N 89°44'57" E
R= N01°49'14"W
SEC. LINE = N89°12'00"E 2636.08'

CTH D

200E 205E 210E 215E 220E 225E

END RELOCATION ORDER
STA. 225+00.19
Y= 417,280.451
X= 674,311.571

50' INGRESS / EGRESS EASEMENT
DOC. # 202405 / DOC. # 249572

PI 223+71.31E
Y =417274.695
X =674182.766
DELTA =2°06'09" (LT)
R =13000.00
D =0°26'27"
T =238.56
L =477.06
PC 221+32.75E
PT 226+09.81E
TANGENT AHEAD N87°38'48"E

ALUMINUM CAP
STA 225+00.12
1.38' RT.
Y=417,279.068
X=674,311.546

T 33 N
R 2 E
8 9
17 16

EXISTING RIGHT OF WAY BASED ON OLD TOWN ROAD RECORDS IN COUNTY SURVEYOR'S OFFICE

COURSE TABLE

POINTS	DIRECTION	DISTANCE
908-351	S 01° 18'55" E	33.00'
351-352	S 88° 10'10" W	31.16'
352-348	N 25° 35'59" W	78.96'
348-349	N 88° 10'45" E	99.30'
349-368	N 83° 02'55" E	111.82'
368-369	N 89° 24'45" E	359.17'
369-370	N 89° 07'05" E	229.14'
370-371	S 84° 45'11" E	102.01'
371-372	N 89° 37'17" E	369.92'
372-373	N 84° 41'20" E	130.15'
373-374	N 89° 05'44" E	100.00'
374-375	S 82° 22'25" E	101.12'
375-376	N 89° 12'00" E	200.00'
376-377	N 84° 26'54" E	127.93'
377-378	N 89° 44'57" E	272.95'
378-379	N 85° 02'43" E	250.30'
379-380	N 88° 47'30" E	199.07'
380-381	S 43° 26'13" E	37.43'
381-382	N 89° 12'00" E	26.73'
382-909	S 01° 01'41" W	33.02'
909-383	S 00° 37'55" W	33.01'
383-384	S 89° 12'00" W	98.94'
384-385	S 84° 44'29" W	100.53'
385-386	N 86° 20'36" W	100.58'
386-387	S 89° 12'00" W	472.70'
387-388	S 87° 33'42" W	127.12'
388-389	S 80° 33'53" W	101.12'
389-390	N 82° 22'25" W	101.12'
390-391	S 89° 05'44" W	100.00'
391-392	S 83° 23'06" W	100.50'
392-393	N 86° 41'56" W	200.87'
393-394	S 89° 12'00" W	599.42'
394-395	S 76° 56'03" W	30.40'
395-396	S 88° 36'54" W	170.13'
396-397	S 85° 45'09" W	100.12'
397-416	N 81° 42'19" W	89.95'
416-350	S 89° 12'00" W	112.53'
350-351	S 89° 12'00" W	34.86'

REVISION DATE 2-7-13 N.C.	DATE 12/19/2012	SCALE, FEET 0 100 200	HWY: CTH D	STATE R/W PROJECT NUMBER 8900-06-06	PLAT SHEET NO: 4.06
	GRID FACTOR N/A		COUNTY: TAYLOR	CONSTRUCTION PROJECT NUMBER 8900-06-76	PS&E SHEET 47 E

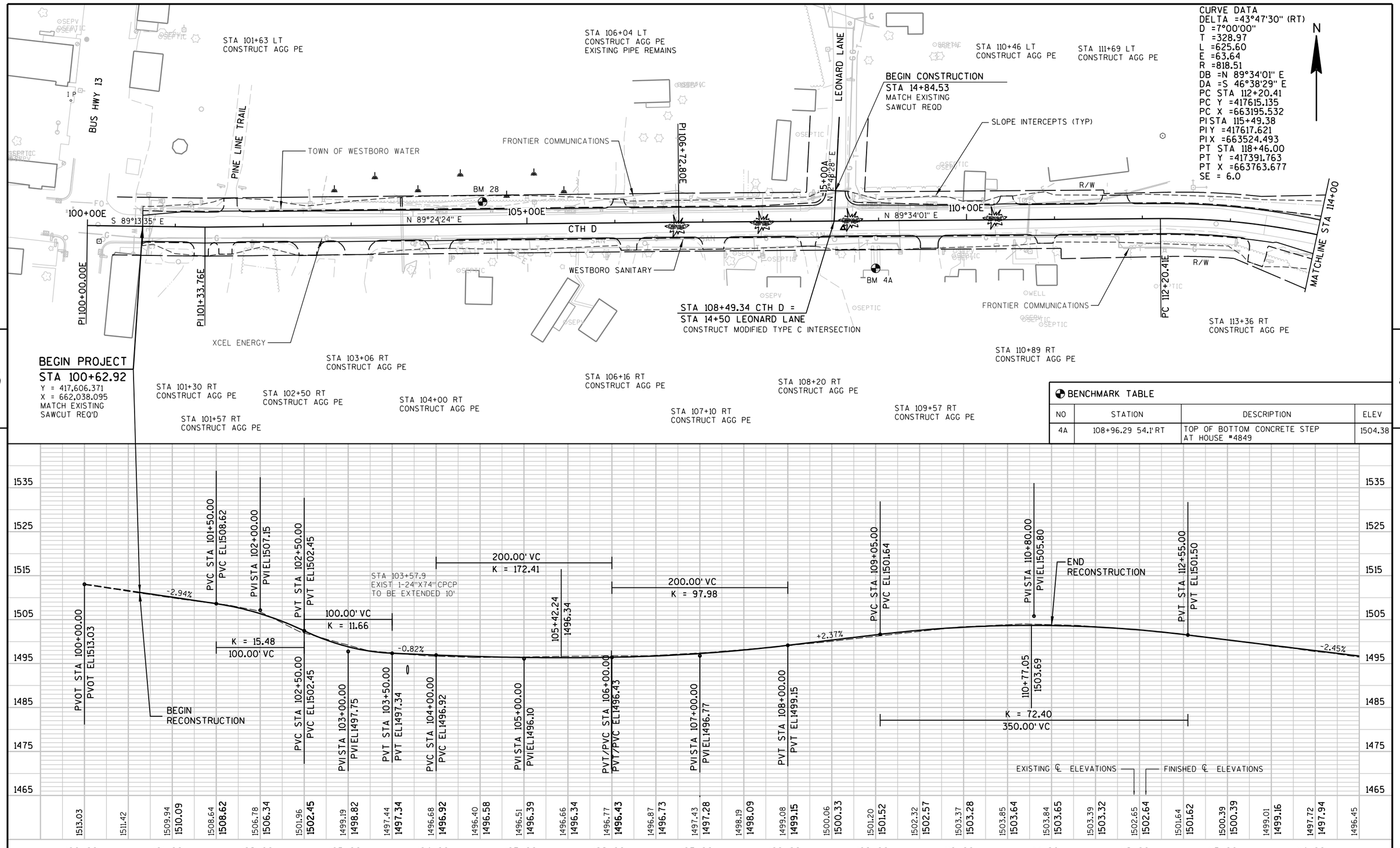

PROJECT NO: 8900-06-76	HWY: CTH D	COUNTY: TAYLOR	PLAN AND PROFILE	SHEET 48	E

EXCEPTION TO NET CENTERLINE LENGTH
STA 115+00.78 TO STA 115+81.12

PI 115+49.38E

STA 116+87 LT
CONSTUCT AGG PE

STA 118+22 LT
CONSTUCT AGG PE
EXISTING PIPE REMAINS

STA 119+49 LT
CONSTUCT AGG PE

CURVE DATA
DELTA =16°03'53" (RT)
D =23°56'42"
T =33.77
L =67.09
E =2.37
R =239.28
DB =N 5°35'45" E
DA =N 21°39'38" E
PC STA 24+52.45
PC Y =417019.575
PC X =664116.490
PI STA 24+86.21
PI Y =417053.180
PI X =664119.782
PT STA 25+19.53
PT Y =417084.562
PT X =664132.246

STA 124+45 LT
CONSTUCT AGG PE

STA 126+22 LT
CONSTUCT AGG PE

STA 123+20.98 CTH D =
STA 25+50 OLD 13 ROAD
CONSTRUCT MODIFIED TYPE C INTERSECTION

N

MATCHLINE STA 114+00

115+00E

CTH D

BM 26

SILVER CREEK

FRONTIER COMMUNICATIONS

PC 120+11.01E

S 46°38'29" E

120+00E

PT 118+46.00E

BM 25

XCEL ENERGY

R/W

125+00E

PT 125+71.19E

BM 24

N 86°43'33" E

MATCHLINE STA 128+00

MGS GUARDRAIL TERMINAL EAT
STA 114+11.3 TO STA 114+63.4, LT
STA 114+5.9 TO STA 114+60.4, RT
STA 116+18.1 TO STA 116+70.2, LT
STA 116+21.8 TO STA 116+76.3, RT

MGS THRIE BEAM TRANSITION
STA 114+60.4 TO STA 115+00.8, RT
STA 114+63.4 TO STA 115+02.1, LT
STA 115+79.4 TO STA 116+18.1, LT
STA 115+81.4 TO STA 116+21.8, RT

EXCEPTION TO NET CENTERLINE LENGTH
STA 115+00.78 TO STA 115+81.12
BRIDGE B-60-19 TO REMAIN

CURVE DATA
DELTA =43°47'30" (RT)
D =7°00'00"
T =328.97
L =625.60
E =63.64
R =818.51
DB =N 89°34'01" E
DA =S 46°38'29" E
PC STA 112+20.41
PC Y =417615.135
PC X =663195.532
PI STA 115+49.38
PI Y =417617.621
PI X =663524.493
PT STA 118+46.00
PT Y =417391.763
PT X =663763.677
SE = 6.0

XCEL ENERGY

SLOPE INTERCEPTS (TYP)

FRONTIER COMMUNICATIONS

PI 124+86.21B

125+00B

PI 25+19.53B

PC 24+52.45B

PT 24+52.45B

STA 124+37 RT
CONSTUCT FE
EXISTING PIPE REMAINS

PI 123+63.80E

OLD 13 ROAD

BEGIN CONSTRUCTION
STA 24+69.39
MATCH EXISTING
SAWCUT REQD

STA 121+49 RT
CONSTUCT AGG PE

STA 127+56 RT
CONSTUCT AGG PE

R/W

CURVE DATA
DELTA =46°37'58" (LT)
D =7°00'00"
T =352.78
L =666.18
E =72.79
R =818.51
DB =S 46°38'29" E
DA =N 86°43'33" E
PC STA 120+11.01
PC Y =417278.474
PC X =663883.650
PI STA 123+63.80
PI Y =417036.266
PI X =664140.148
PT STA 126+77.19
PT Y =417056.415
PT X =664492.356
SE = 6.0

BENCHMARK TABLE

NO	STATION	DESCRIPTION	ELEV
24	127+36.93 33.81'LT	TOP HYDRANT NUT NORTH CTH D AT BROWN HOUSE 300'EAST OF OLD HWY 13	1521.06
25	121+51.00 41.98'LT	RAILROAD SPIKE IN PP 100'± OLD 13 ROAD EAST CTH D	1496.81
26	115+1.11 20.38'RT	ALUMINMUM DISC IN SIDEWALK SOUTHWEST CORNER OF BRIDGE B-60-19-76 CTH D AT RIVER	1495.64

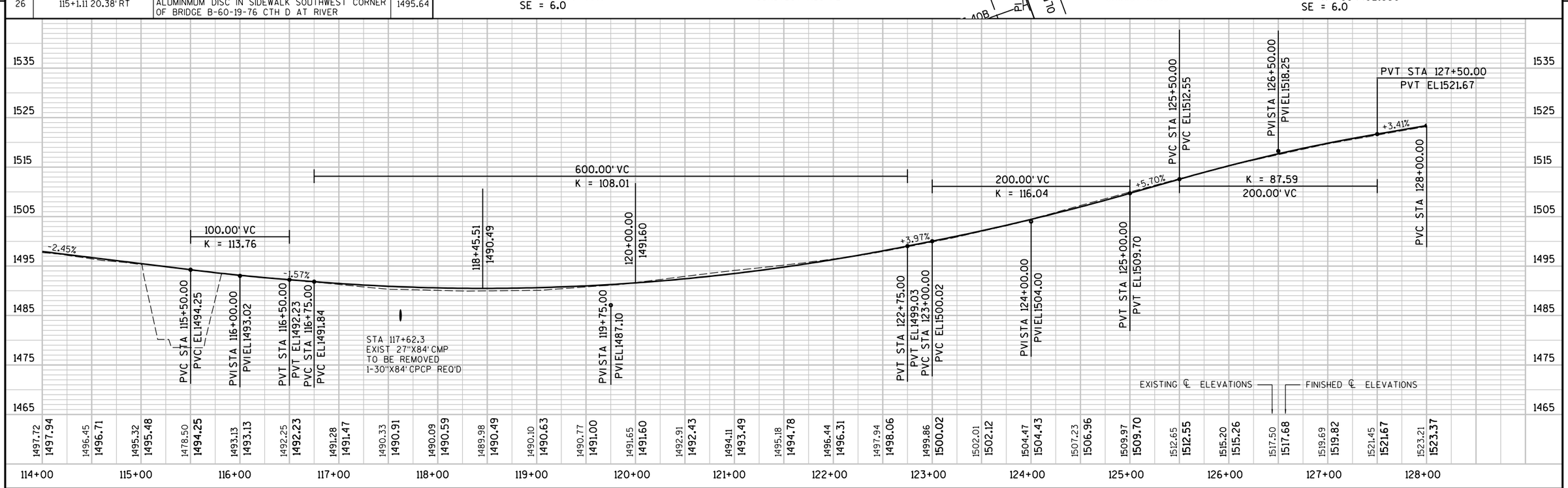

PROJECT NO: 8900-06-76	HWY: CTH D	COUNTY: TAYLOR	PLAN AND PROFILE	SHEET 49	E

FILE NAME : P:\PT\T\Tayhd\108326\CAD\PPTAYD02.dgn PLOT TIME : 12:21:21 PM PLOT DATE : 1/31/2013 PLOT BY : SEH PLOT NAME : PLOT SCALE : N/A

WISDOT/CADDS SHEET 40

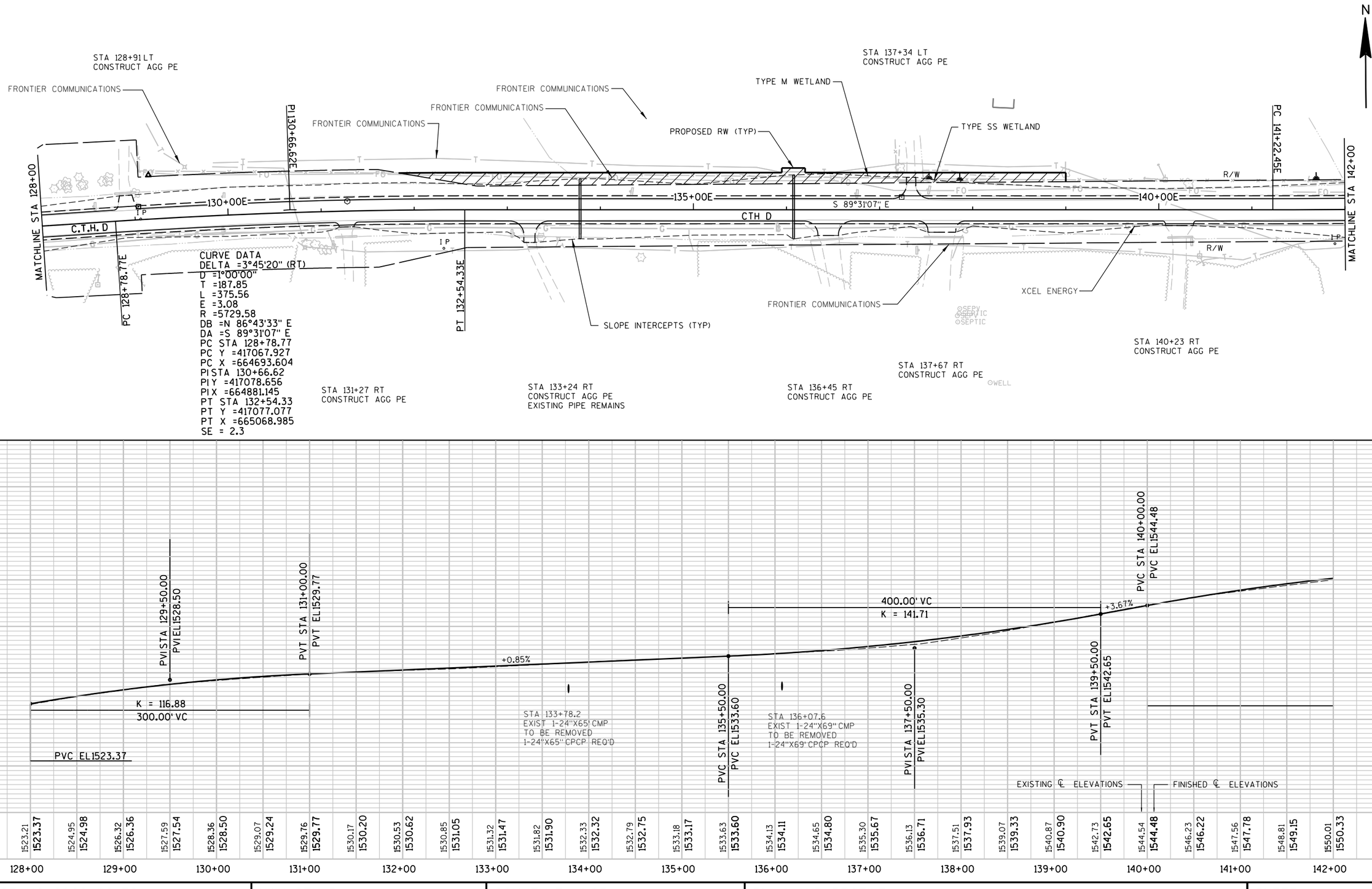

5

5

PROJECT NO: 8900-06-76	HWY: CTH D	COUNTY: TAYLOR	PLAN AND PROFILE	SHEET 50	E

CURVE DATA
DELTA =1°56'20" (LT)
D =0°42'58"
T =135.37
L =270.71
E =1.15
R =8000.00
DB =S 89°31'07" E
DA =N 88°32'34" E
PC STA 141+22.45
PC Y =417069.783
PC X =665937.073
PI STA 142+57.81
PI Y =417068.645
PI X =666072.434
PT STA 143+93.15
PT Y =417072.088
PT X =666207.756
SE = 1.1

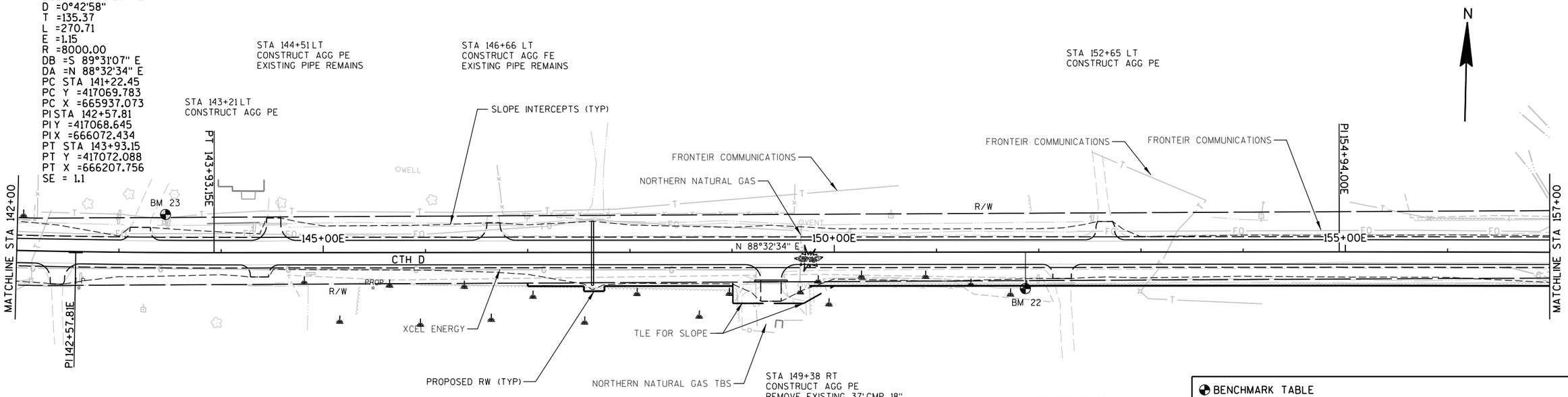

BENCHMARK TABLE

NO	STATION	DESCRIPTION	ELEV
22	151+86.92 35.8' RT	SET RAILROAD SPIKE IN 18" ELDER AT NORTH END OF DRIVEWAY W 4581	1560.45
23	143+45.65 37.3' LT	SET 3/8" SPIKE IN PP= 108 8/W NORTH CTH D AT FIRE NUMBER W 4620	1553.27

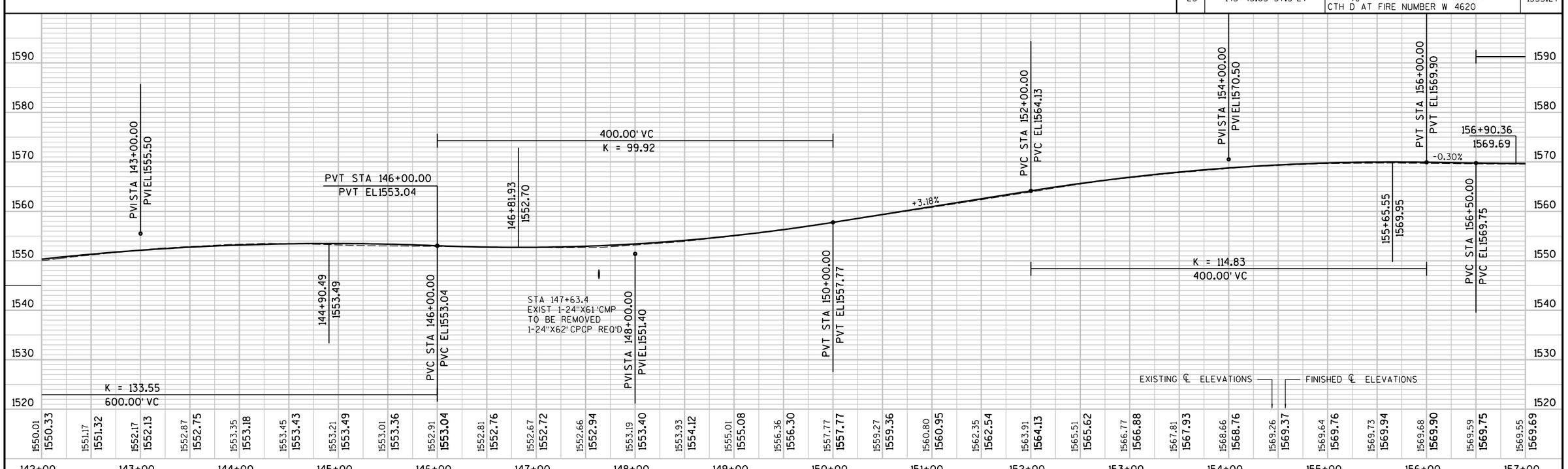

PROJECT NO: 8900-06-76	HWY: CTH D	COUNTY: TAYLOR	PLAN AND PROFILE	SHEET 51	E

FILE NAME : P:\PT\T\Tayhd\108326\CAD\PPTAYD04.dgn PLOT TIME : 11:09:38 AM PLOT DATE : 3/5/2013 PLOT BY : SEH PLOT NAME : PLOT SCALE : N/A

WISDOT/CADDS SHEET 40

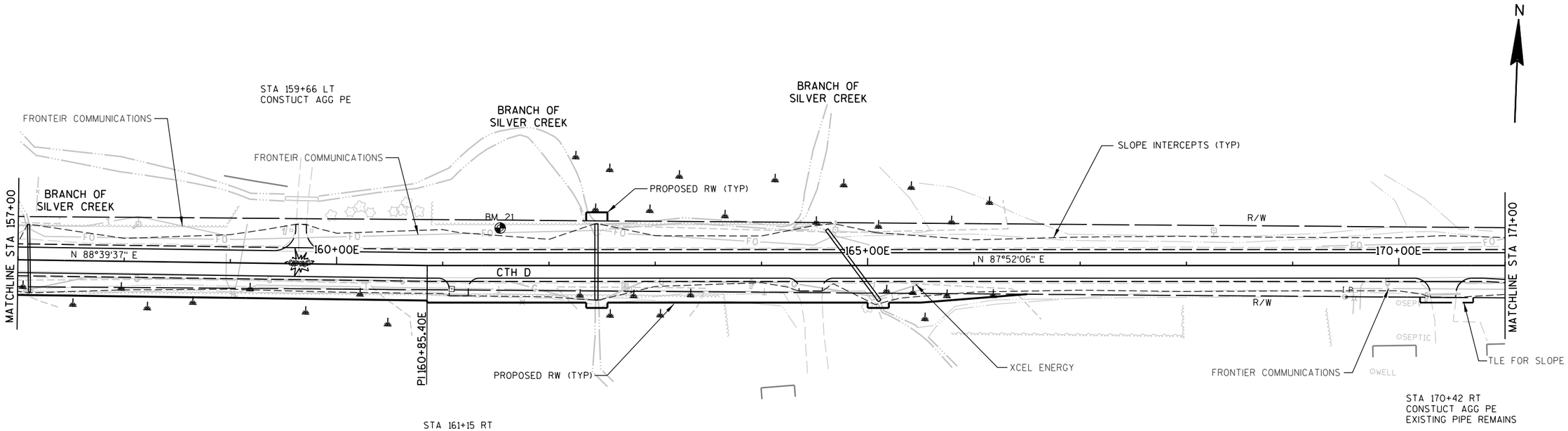

BENCHMARK TABLE

NO	STATION	DESCRIPTION	ELEV
21	161+53.99 35.19'LT	SET RR SPIKE IN PP*108 3W NORTH OF CTH D 150'± EAST OF FIRE NUMBER W 4492	1571.54

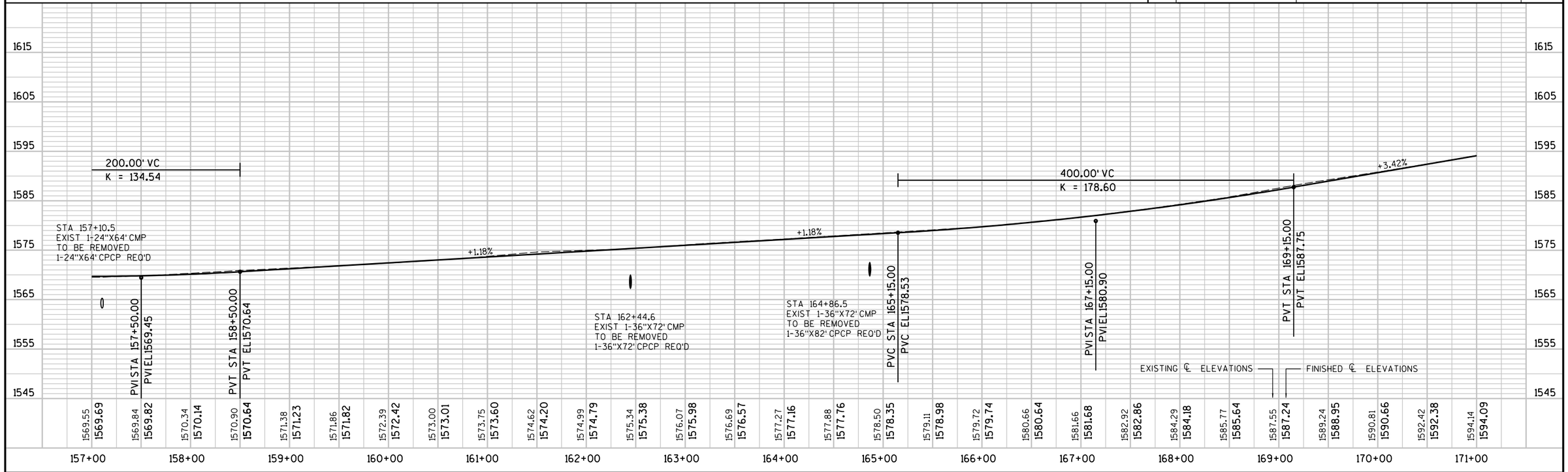

PROJECT NO: 8900-06-76	HWY: CTH D	COUNTY: TAYLOR	PLAN AND PROFILE	SHEET 52	E

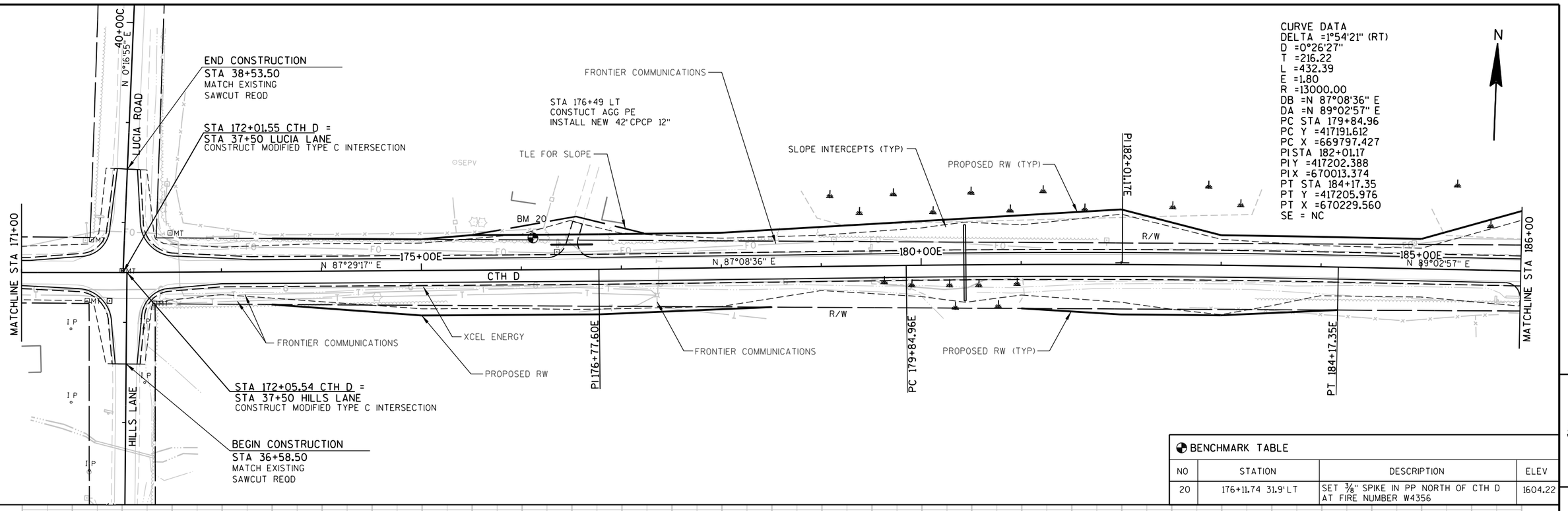

BENCHMARK TABLE			
NO	STATION	DESCRIPTION	ELEV
20	176+11.74 31.9' LT	SET 3/8" SPIKE IN PP NORTH OF CTH D AT FIRE NUMBER W4356	1604.22

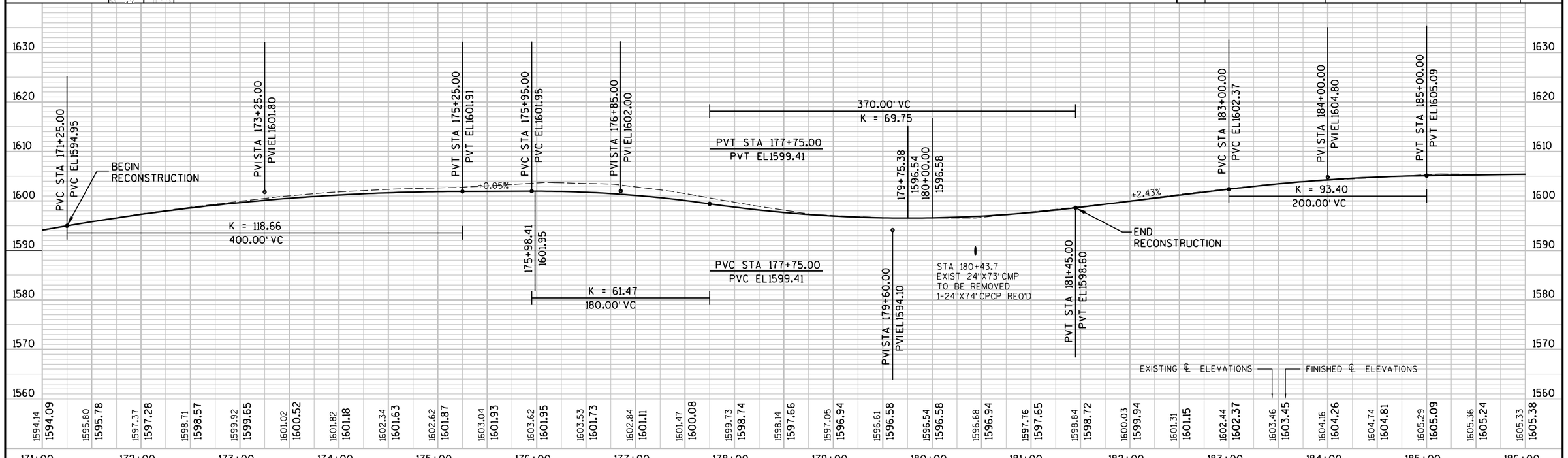

PROJECT NO: 8900-06-76	HWY: CTH D	COUNTY: TAYLOR	PLAN AND PROFILE	SHEET 53	E

BENCHMARK TABLE			
NO	STATION	DESCRIPTION	ELEV
19	199+02.35 27.4'LT	SET 40 D SPIKE WITH WHISKERS IN 30" OAK NORTH EAST CORNER OF WALTERS ROAD AND CTH D	1647.64

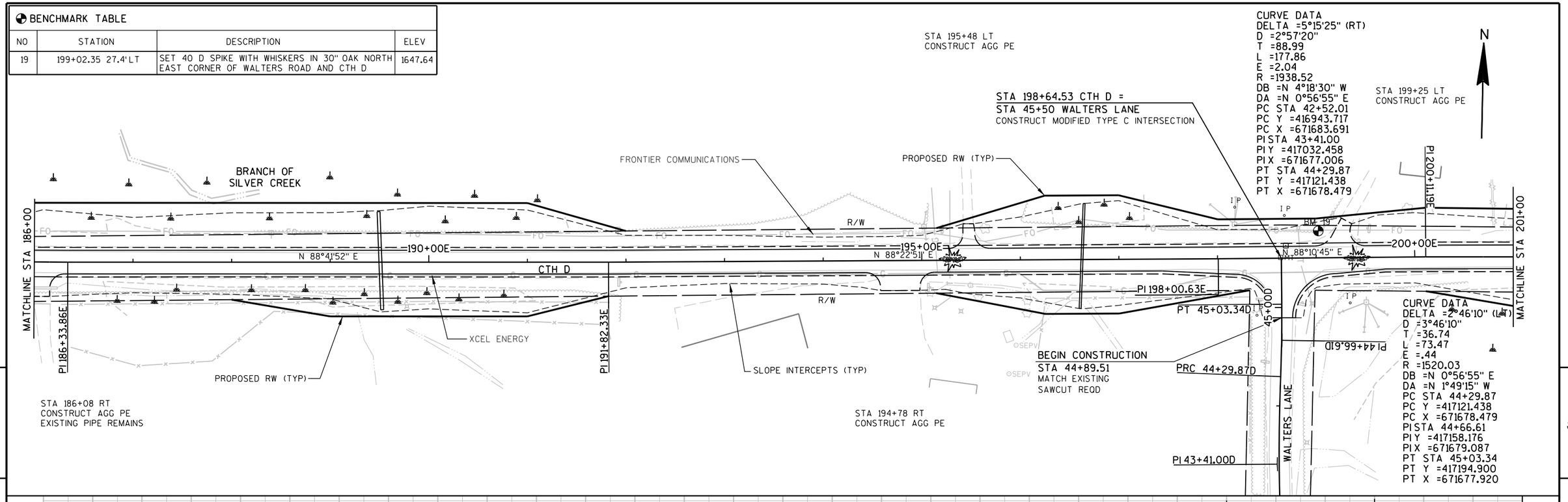

PROJECT NO: 8900-06-76	HWY: CTH D	COUNTY: TAYLOR	PLAN AND PROFILE	SHEET 54	E

FILE NAME : P:\PT\T\Tayhd\108326\CAD\PPTAYD07.dgn PLOT TIME : 12:21:24 PM PLOT DATE : 1/31/2013 PLOT BY : SEH PLOT NAME : PLOT SCALE : N/A

WISDOT/CADDS SHEET 40

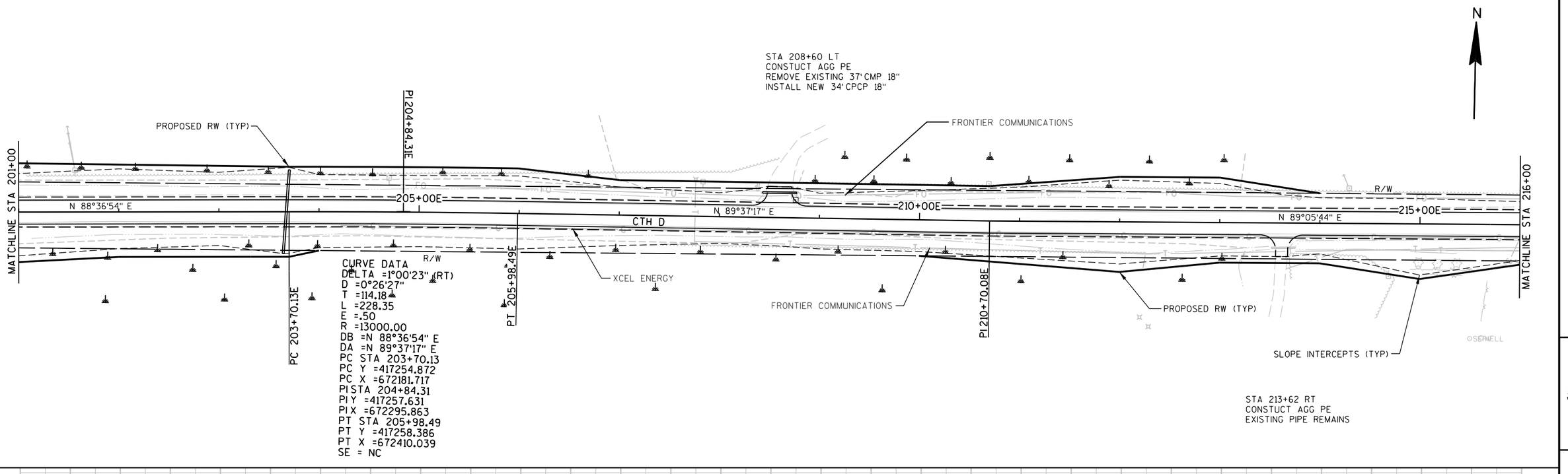

PROJECT NO: 8900-06-76	HWY: CTH D	COUNTY: TAYLOR	PLAN AND PROFILE	SHEET 55	E

FILE NAME : P:\PT\T\Tayhd\108326\CAD\PPTAYD08.dgn PLOT TIME : 12:21:24 PM PLOT DATE : 1/31/2013 PLOT BY : SEH PLOT NAME : PLOT SCALE : N/A

WISDOT/CADDS SHEET 40

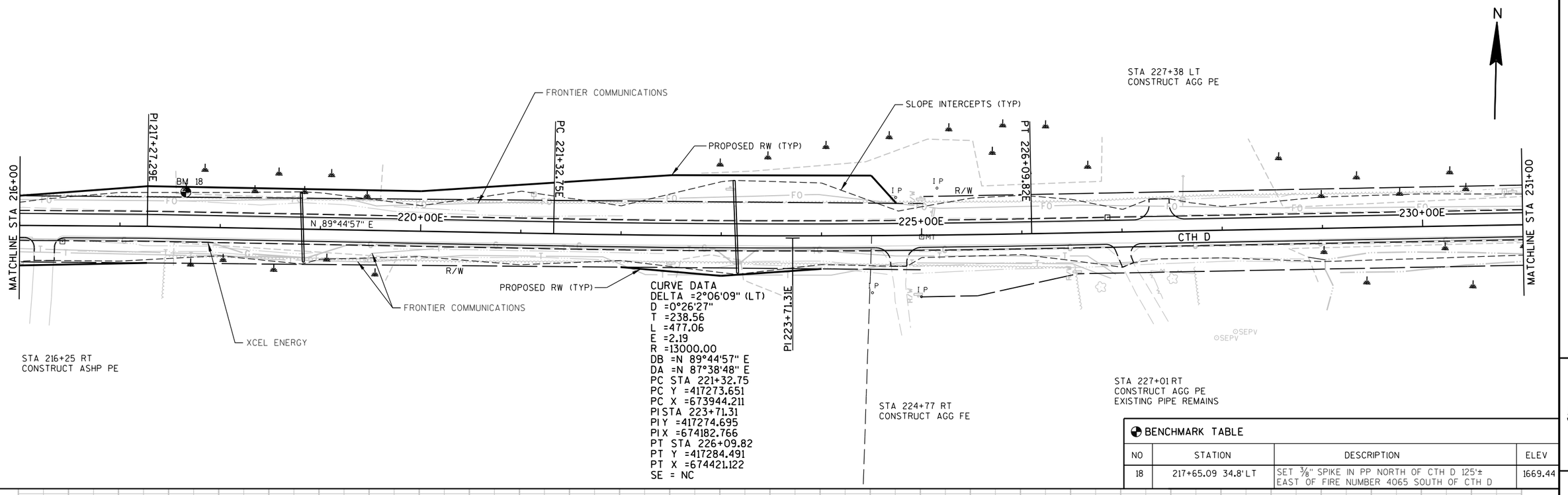

BENCHMARK TABLE

NO	STATION	DESCRIPTION	ELEV
18	217+65.09 34.8' LT	SET 3/8" SPIKE IN PP NORTH OF CTH D 125'± EAST OF FIRE NUMBER 4065 SOUTH OF CTH D	1669.44

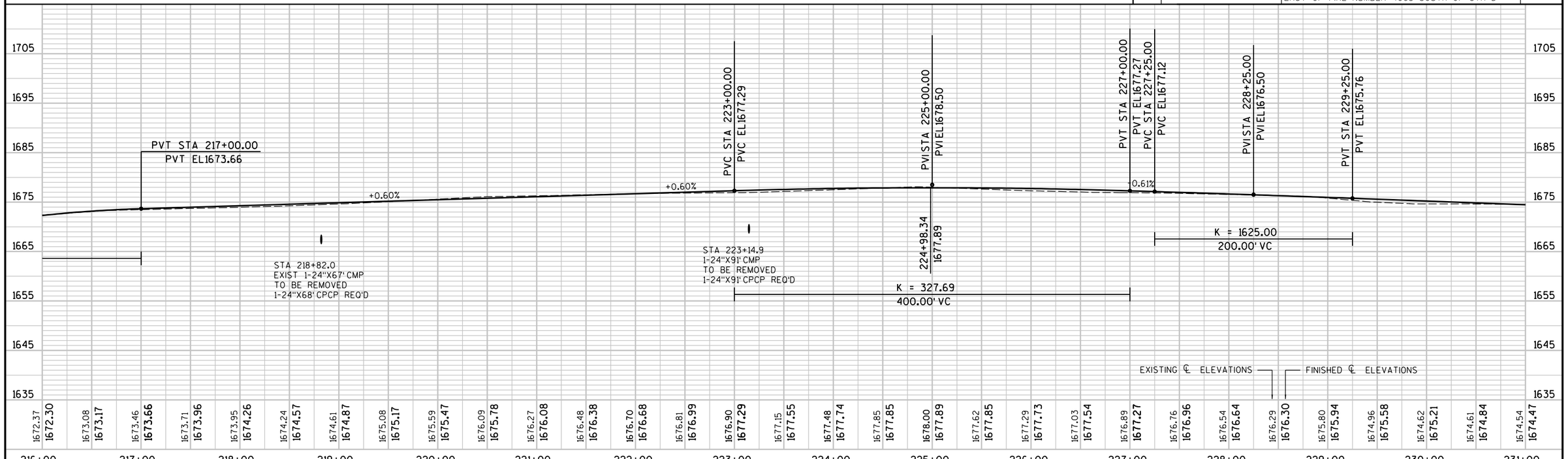

PROJECT NO: 8900-06-76	HWY: CTH D	COUNTY: TAYLOR	PLAN AND PROFILE	SHEET 56	E

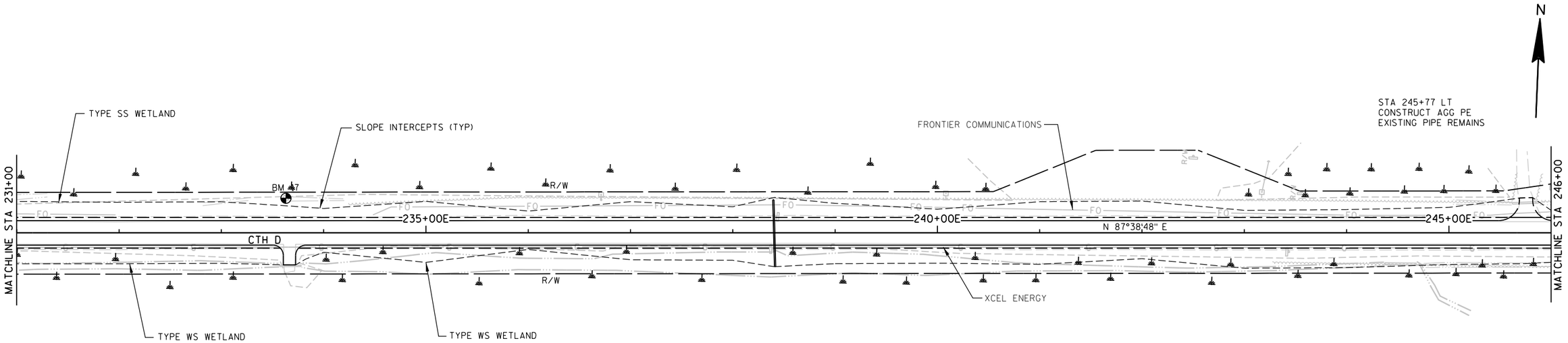

5

5

BENCHMARK TABLE

NO	STATION	DESCRIPTION	ELEV
17	245+47.61 34.5' LT	SET 3/8" SPIKE IN PP NORTH CTH D 4TH PP WEST OF OLAN LANE	1669.96

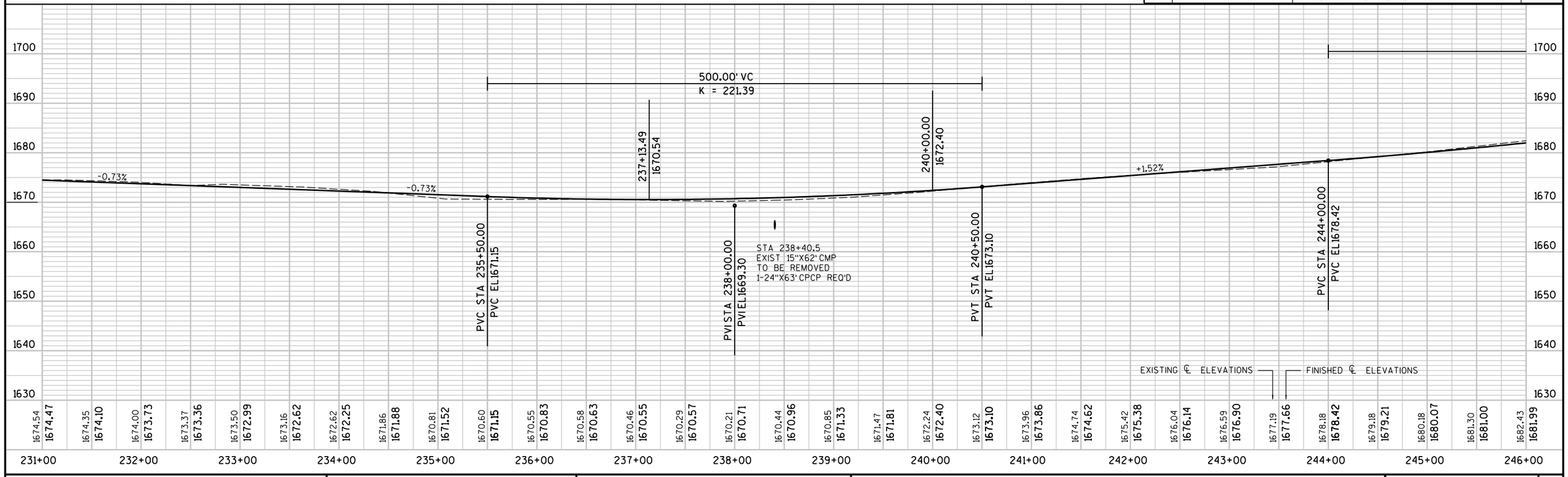

PROJECT NO: 8900-06-76	HWY: CTH D	COUNTY: TAYLOR	PLAN AND PROFILE	SHEET 57	E

BENCHMARK TABLE

NO	STATION	DESCRIPTION	ELEV
15	259+37.13 59.5'LT	SET RAILROAD SPIKE IN 8" BIRCH NORTH EAST CORNER OF CTH D AND RUSTIC ROAD	1720.91
16	255+34.88 44.0'RT	SET ⅜" SPIKE IN PP SOUTH CTH D 2ND PP EAST OF OLAH LANE 2ND PP WEST OF RUSTIC ROAD 1	1711.23

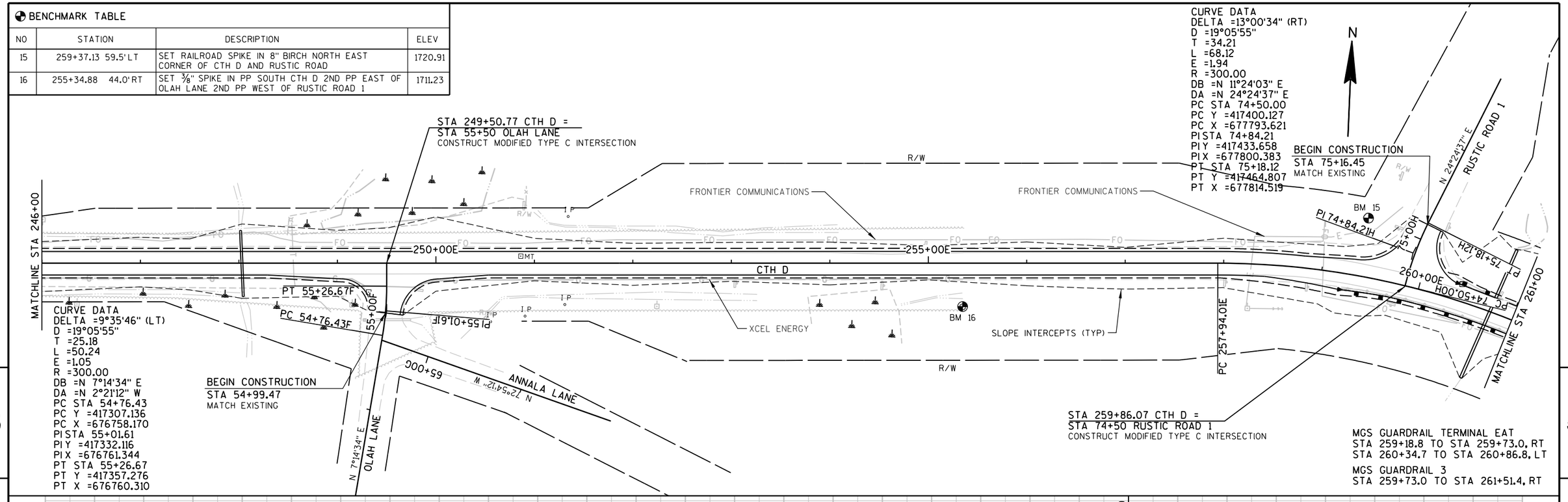

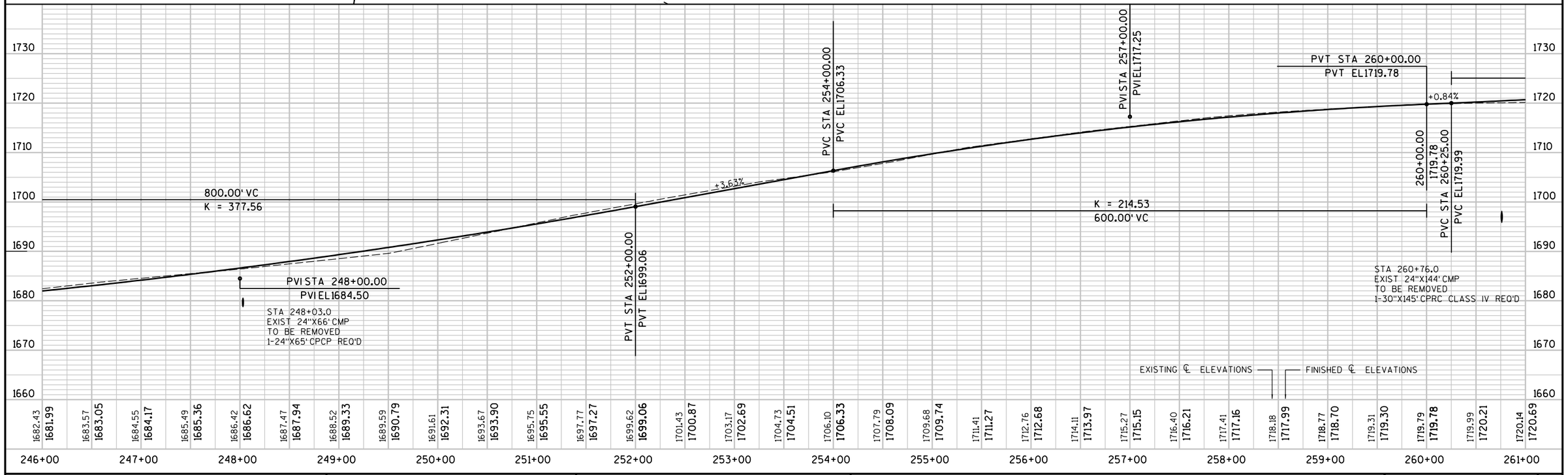

PROJECT NO: 8900-06-76	HWY: CTH D	COUNTY: TAYLOR	PLAN AND PROFILE	SHEET 58	E

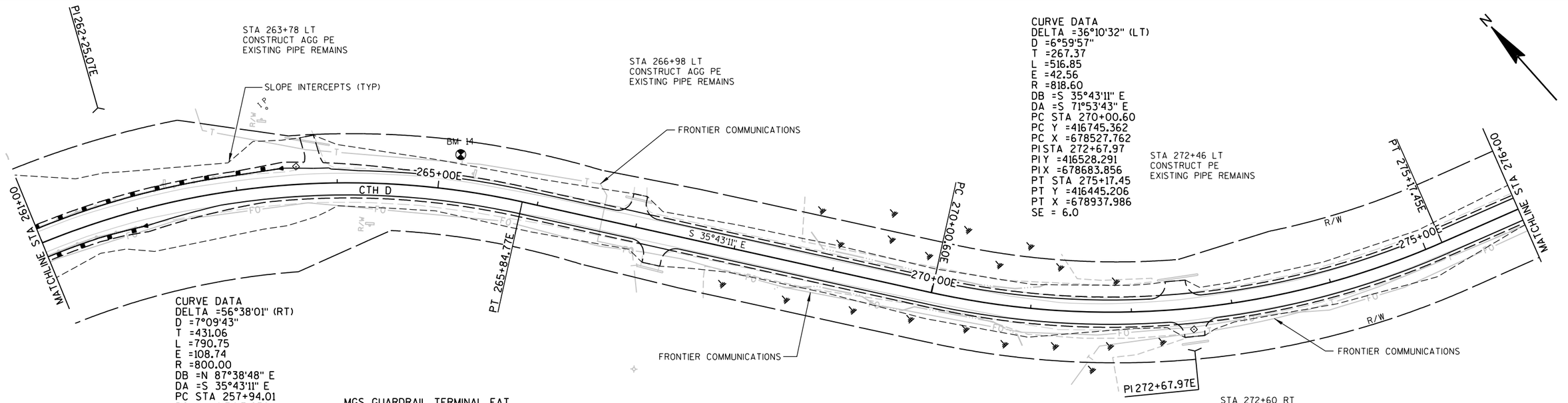

BENCHMARK TABLE

NO	STATION	DESCRIPTION	ELEV
14	265+18.84 35.44' LT	SET 3/8" SPIKE IN 14" PINE NORTH OF CTH D 125'± EAST OF FIRE NUMBER W3674	1726.68

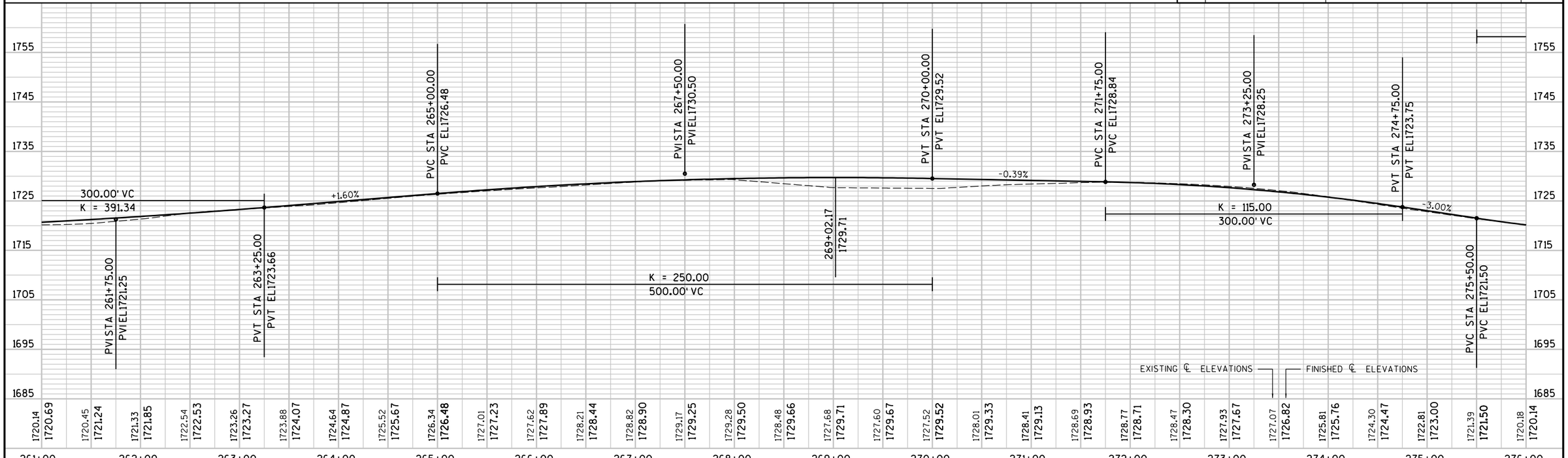

PROJECT NO: 8900-06-76	HWY: CTH D	COUNTY: TAYLOR	PLAN AND PROFILE	SHEET 59	E

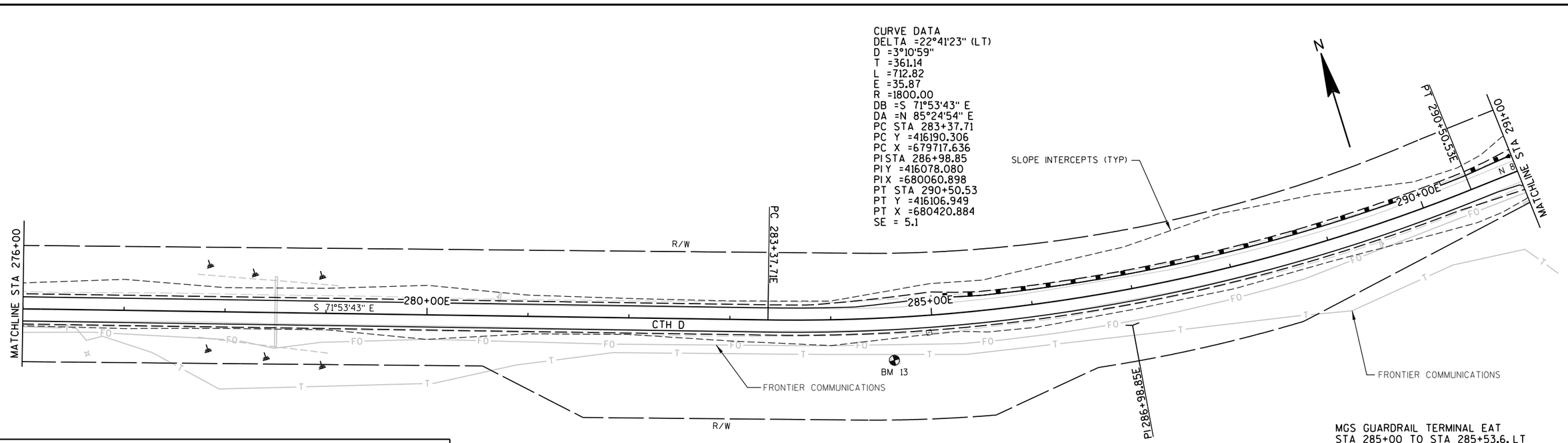

5

MGS GUARDRAIL TERMINAL EAT
STA 285+00 TO STA 285+53.6, LT
STA 290+45.2 TO STA 290+98.3, LT

MGS GUARDRAIL 3
STA 285+53.6 TO STA 290+45.2, LT

5

BENCHMARK TABLE

NO	STATION	DESCRIPTION	ELEV
13	284+61.55 42.4'RT	SET ⅜" SPIKE IN 14" POPLAR TREE SOUTH OF CTH D IN "S" CURVE 600'± EAST OF LARGE CMP CROSSING @ CP 17	1729.89

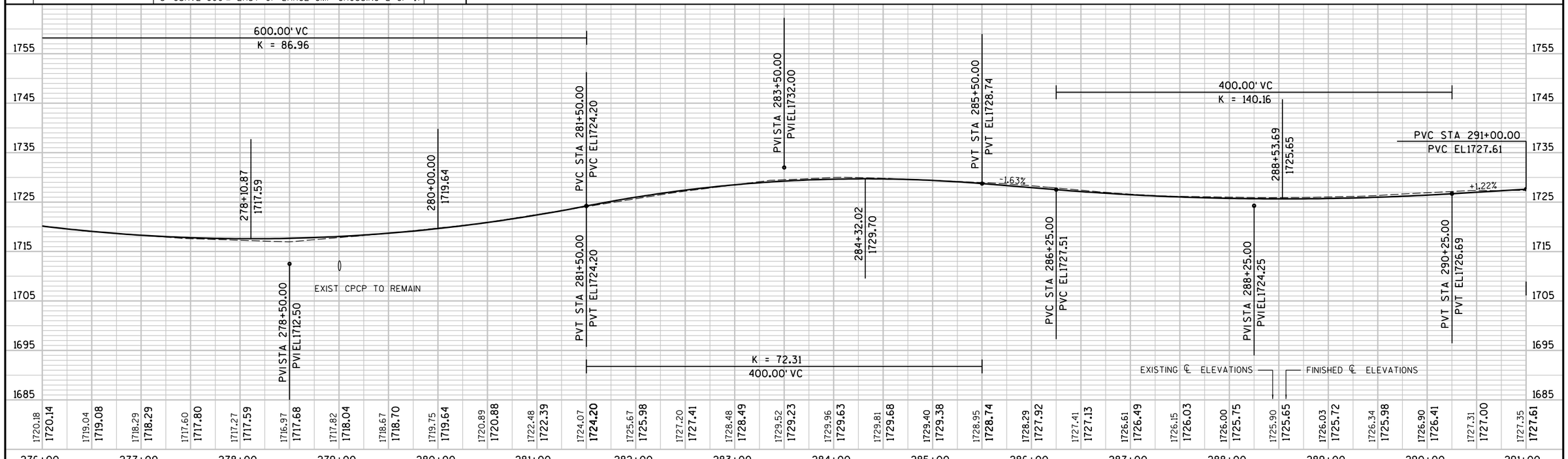

PROJECT NO: 8900-06-76	HWY: CTH D	COUNTY: TAYLOR	PLAN AND PROFILE	SHEET 60	E

MGS GUARDRAIL TERMINAL EAT
STA 291+50.0 TO STA 292+03.0 RT
STA 293+05.4 TO STA 293+59.6 RT
STA 297+00.0 TO STA 297+52.7, LT
STA 301+49.9 TO STA 302+02.0, LT

MGS GUARDRAIL 3
STA 292+03.3 TO STA 293+05.4, RT
STA 297+52.7 TO STA 301+49.9, LT

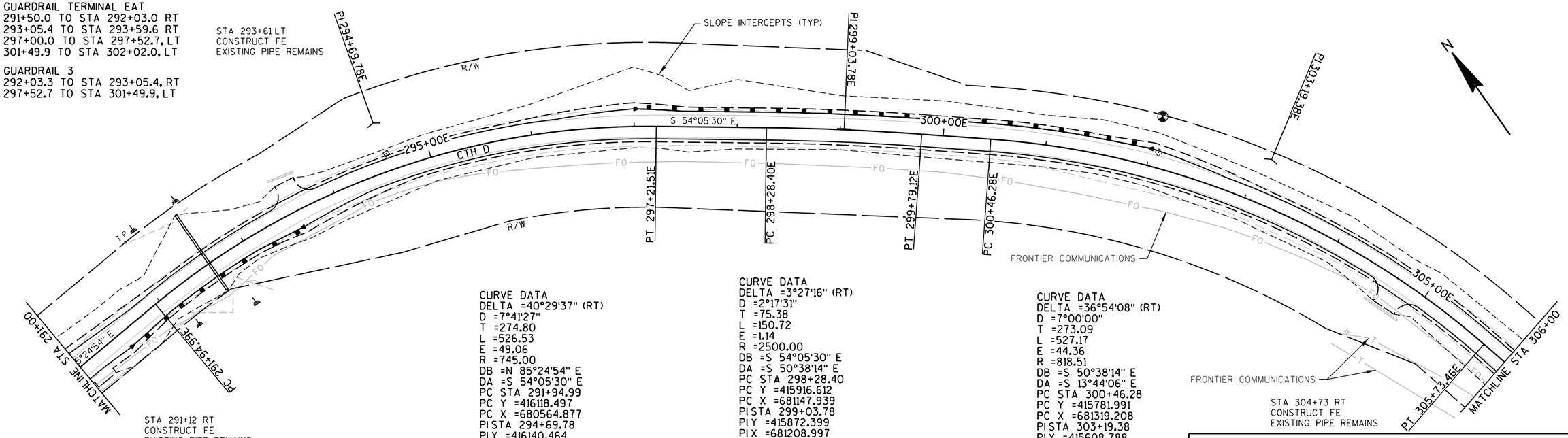

CURVE DATA
DELTA =40°29'37" (RT)
D =7°41'27"
T =274.80
L =526.53
E =49.06
R =745.00
DB =N 85°24'54" E
DA =S 54°05'30" E
PC STA 291+94.99
PC Y =416118.497
PC X =680564.877
PI STA 294+69.78
PI Y =416140.464
PI X =680838.795
PT STA 297+21.51
PT Y =415979.298
PT X =681061.368
SE = 6.0

CURVE DATA
DELTA =3°27'16" (RT)
D =2°17'31"
T =75.38
L =150.72
E =1.14
R =2500.00
DB =S 54°05'30" E
DA =S 50°38'14" E
PC STA 298+28.40
PC Y =415916.612
PC X =681147.939
PI STA 299+03.78
PI Y =415872.399
PI X =681208.997
PT STA 299+79.12
PT Y =415824.589
PT X =681267.280
SE = 4.3

CURVE DATA
DELTA =36°54'08" (RT)
D =7°00'00"
T =273.09
L =527.17
E =44.36
R =818.51
DB =S 50°38'14" E
DA =S 13°44'06" E
PC STA 300+46.28
PC Y =415781.991
PC X =681319.208
PI STA 303+19.38
PI Y =415608.788
PI X =681530.348
PT STA 305+73.46
PT Y =415343.505
PT X =681595.189
SE = 6.0

BENCHMARK TABLE

NO	STATION	DESCRIPTION	ELEV
12	302+02.23 49.74'LT	SET 3/8 SPIKE IN TRIPLE 12" TREE NORTH OF CTH D @ CP 15	1711.92

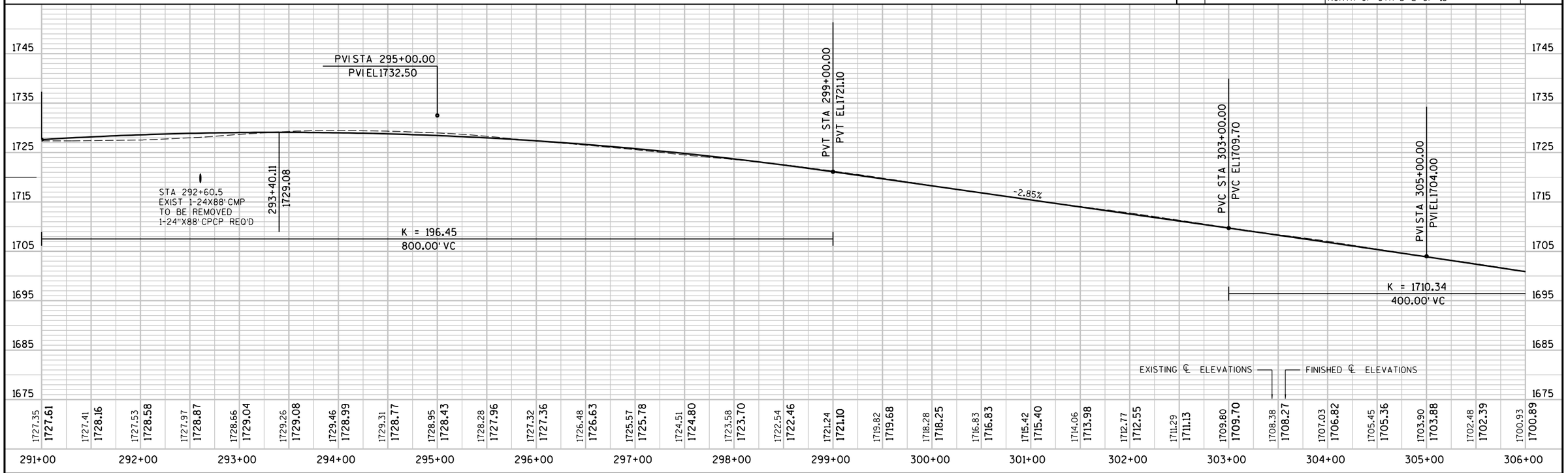

PROJECT NO: 8900-06-76	HWY: CTH D	COUNTY: TAYLOR	PLAN AND PROFILE	SHEET 61	E

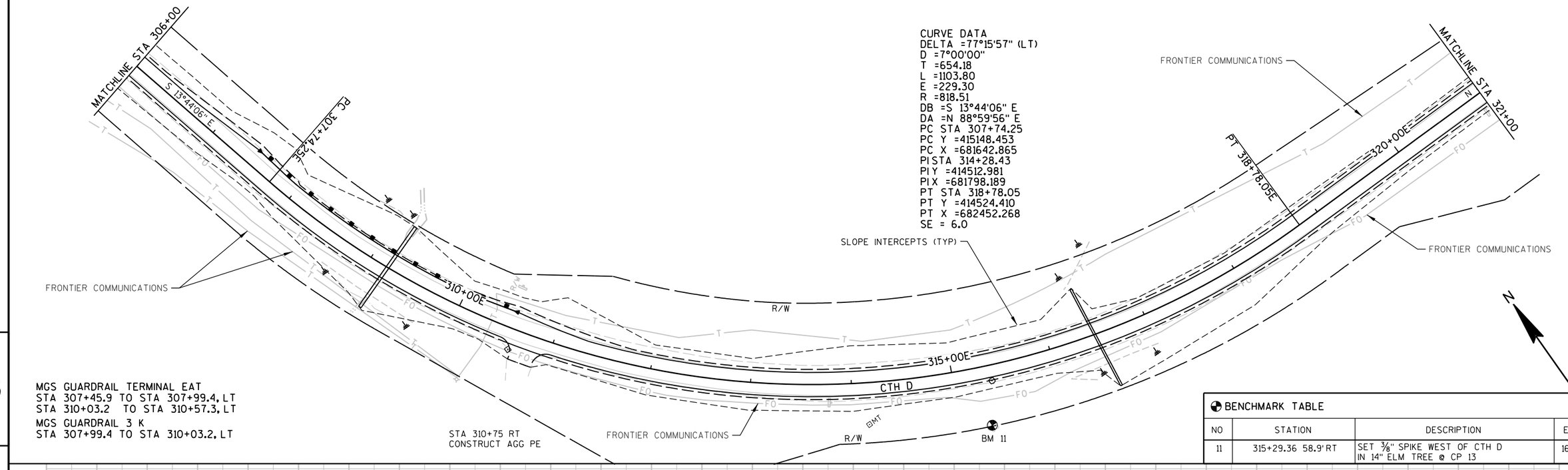

5

MGS GUARDRAIL TERMINAL EAT
STA 307+45.9 TO STA 307+99.4, LT
STA 310+03.2 TO STA 310+57.3, LT
MGS GUARDRAIL 3 K
STA 307+99.4 TO STA 310+03.2, LT

5

BENCHMARK TABLE

NO	STATION	DESCRIPTION	ELEV
11	315+29.36 58.9'RT	SET 3/8" SPIKE WEST OF CTH D IN 14" ELM TREE @ CP 13	1675.31

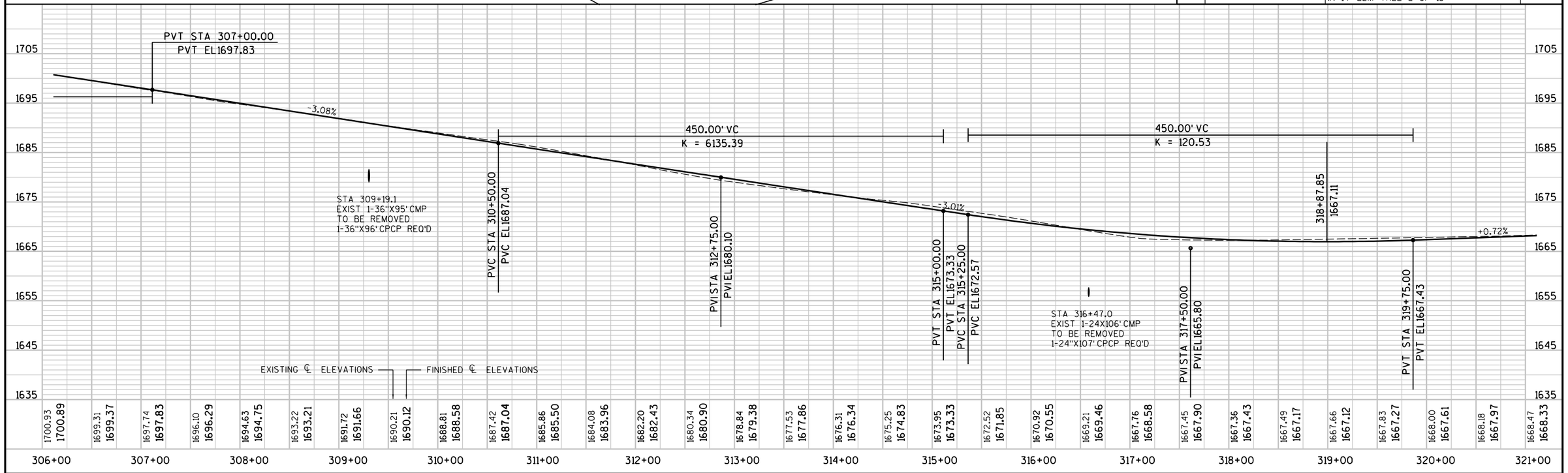

PROJECT NO: 8900-06-76	HWY: CTH D	COUNTY: TAYLOR	PLAN AND PROFILE	SHEET 62	E

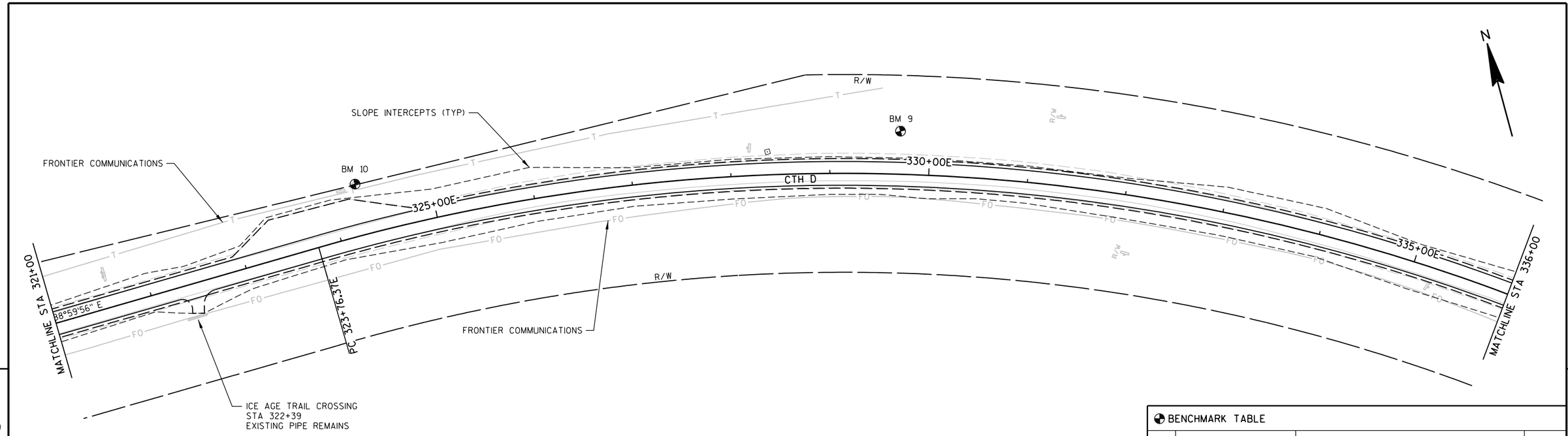

5

5

BENCHMARK TABLE

NO	STATION	DESCRIPTION	ELEV
9	3329+69.76 43.5'LT	SET 3/8" SPIKE IN 14" POPLAR TREE 1800'± EAST OF TRAIL END AREA FOR ICE AGE TRAIL @ CP12	1674.68
10	324+28.14 52.1'LT	TOP CENTER METAL BOLLARD POST @ ICE AGE TRAIL AHEAD CROSSING	1671.70

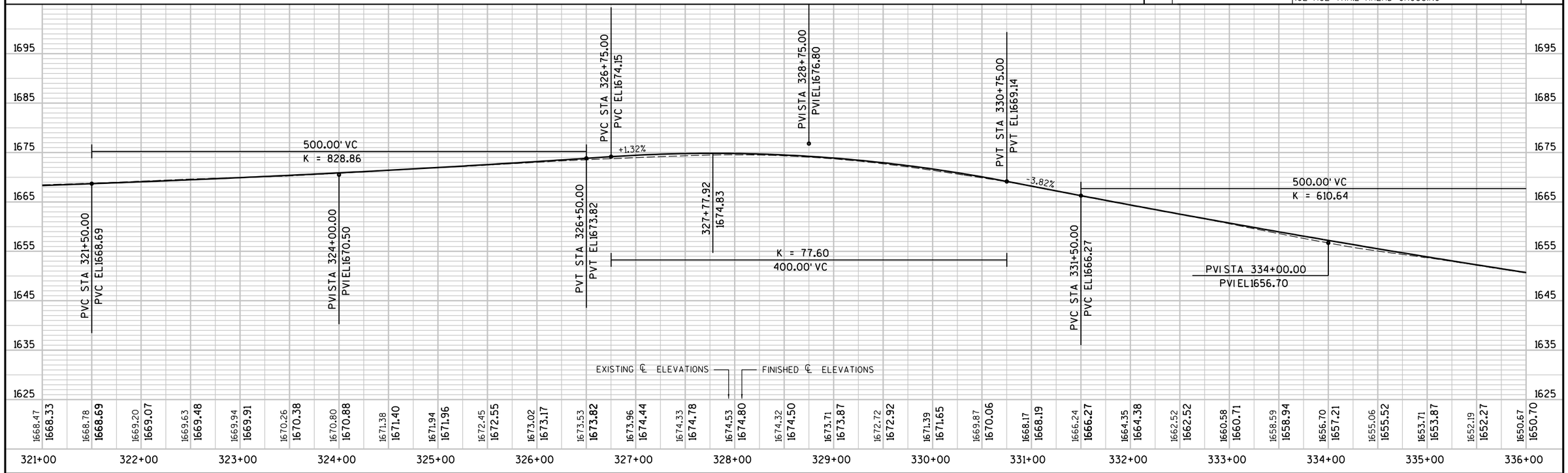

PROJECT NO: 8900-06-76	HWY: CTH D	COUNTY: TAYLOR	PLAN AND PROFILE	SHEET 63	E

STEEL PLATE BEAM GUARD ENERGY ABSORBING TERMINAL
STA 342+25.0 TO STA 342+74.5, LT
STA 342+49.0 TO STA 342+99.4 RT
STA 344+00.0 TO STA 344+50.6 RT

STEEL PLATE BEAM GUARD SHORT RADIUS TERMINAL
STA 85+26.1 TO STA 85+40.0, LT

STEEL PLATE BEAM GUARD CLASS A
STA 342+74.5 TO STA 343+48.9, LT
STA 342+99.4 TO STA 344+00.2, RT

STEEL PLATE BEAM GUARD SHORT RADIUS
STA 84+64.3 TO STA 85+26.1, LT RADIUS 24'

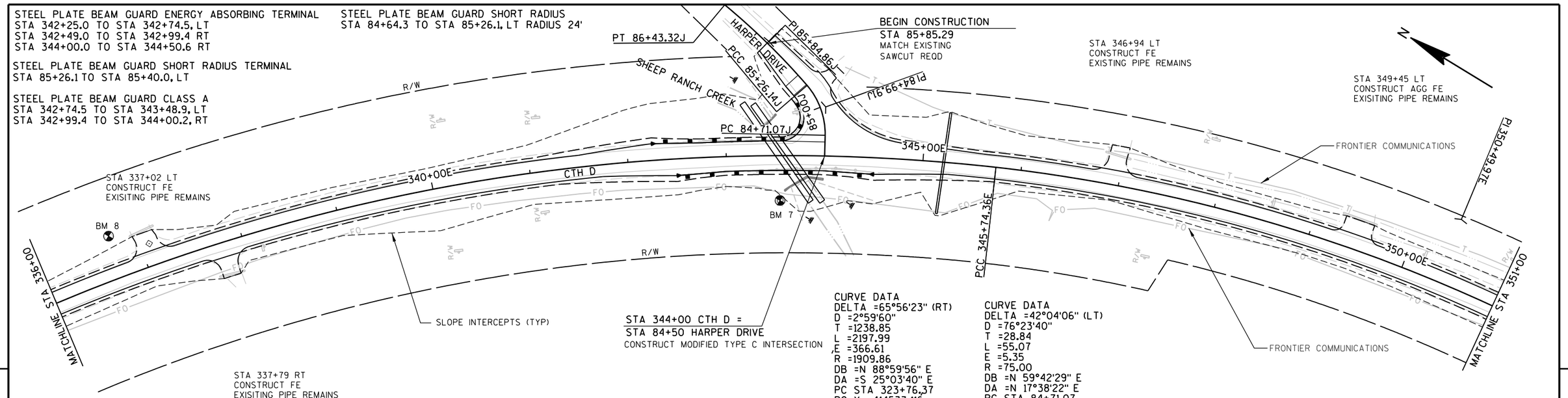

CURVE DATA
DELTA =65°56'23" (RT)
D =2°59'60"
T =1238.85
L =2197.99
E =366.61
R =1909.86
DB =N 88°59'56" E
DA =S 25°03'40" E
PC STA 323+76.37
PC Y =414533.116
PC X =682950.513
PI STA 336+15.22
PI Y =414554.759
PI X =684189.176
PT STA 345+74.36
PT Y =413432.538
PT X =684713.937
SE = 3.9

CURVE DATA
DELTA =42°04'06" (LT)
D =76°23'40"
T =28.84
L =55.07
E =5.35
R =75.00
DB =N 59°42'29" E
DA =N 17°38'22" E
PC STA 84+71.07
PC Y =413597.523
PC X =684651.169
PI STA 84+99.91
PI Y =413612.071
PI X =684676.073
PT STA 85+26.14
PT Y =413639.556
PT X =684684.812

BENCHMARK TABLE

NO	STATION	DESCRIPTION	ELEV
7	343+54 45.56' RT	SET 3/8" SPIKE IN 18" WHITE PINE NORTH WEST CORNER OF HARPER ROAD AND CTH D NORTH OF CMP CROSSING	1622.31
8	336+73.91 43.7' LT	SET 3/8" SPIKE IN 14" PINE EAST OF CTH D @ CP #11 600'± NORTH OF HARPER ROAD	1648.38

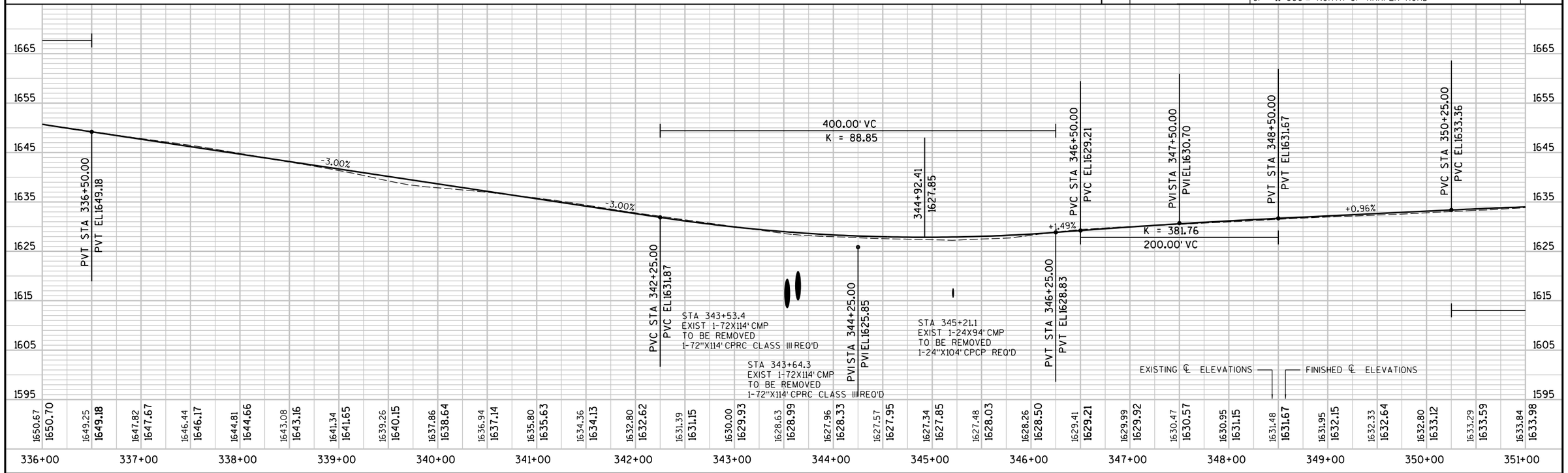

PROJECT NO: 8900-06-76	HWY: CTH D	COUNTY: TAYLOR	PLAN AND PROFILE	SHEET 64 E

STA 352+33 LT
CONSTRUCT FE

STA 362+54 LT
CONSTRUCT AGG PE
EXISTING PIPE REMAINS

CURVE DATA
DELTA =6°20'35" (LT)
D =1°59'59"
T =158.75
L =317.18
E =4.39
R =2865.00
DB =S 7°20'22" W
DA =S 0°59'46" W
PC STA 362+63.53
PC Y =411772.810
PC X =684757.114
PI STA 364+22.28
PI Y =411615.358
PI X =684736.834
PT STA 365+80.71
PT Y =411456.630
PT X =684734.074
SE = 4.0

N

FRONTIER COMMUNICATIONS

FRONTIER COMMUNICATIONS

FRONTIER COMMUNICATIONS

SLOPE INTERCEPTS (TYP)

STA 361+07.85 CTH D =
STA 95+50 PATRICK DRIVE
CONSTRUCT MODIFIED TYPE C INTERSECTION

FRONTIER COMMUNICATIONS

MATCHLINE STA 351+00

355+00E

CTH D

S 7°20'22" W

360+00E

365+00E

PC 362+63.53E

PT 365+80.71E

MATCHLINE STA 366+00

PT 355+00.09E

CURVE DATA
DELTA =32°24'02" (RT)
D =3°30'00"
T =475.61
L =925.73
E =67.69
R =1637.02
DB =S 25°03'40" E
DA =S 7°20'22" W
PC STA 345+74.36
PC Y =413432.538
PC X =684713.937
PI STA 350+49.97
PI Y =413001.706
PI X =684915.397
PT STA 355+00.09
PT Y =412529.996
PT X =684854.641
SE = 4.3

95+00K

S 8°12'48" E

PATRICK DRIVE

R/W

PI 364+22.28E

BEGIN CONSTRUCTION
STA 95+05.14
MATCH EXISTING

STA 359+84 RT
CONSTRUCT PE
EXISTING PIPE REMAINS

BENCHMARK TABLE

NO	STATION	DESCRIPTION	ELEV
6	360+28.84 33.8' RT	SET 3/8" SPIKE IN 12" PINE NORTH WEST CORNER OF PATRICK DRIVE AND CTH D	1627.50

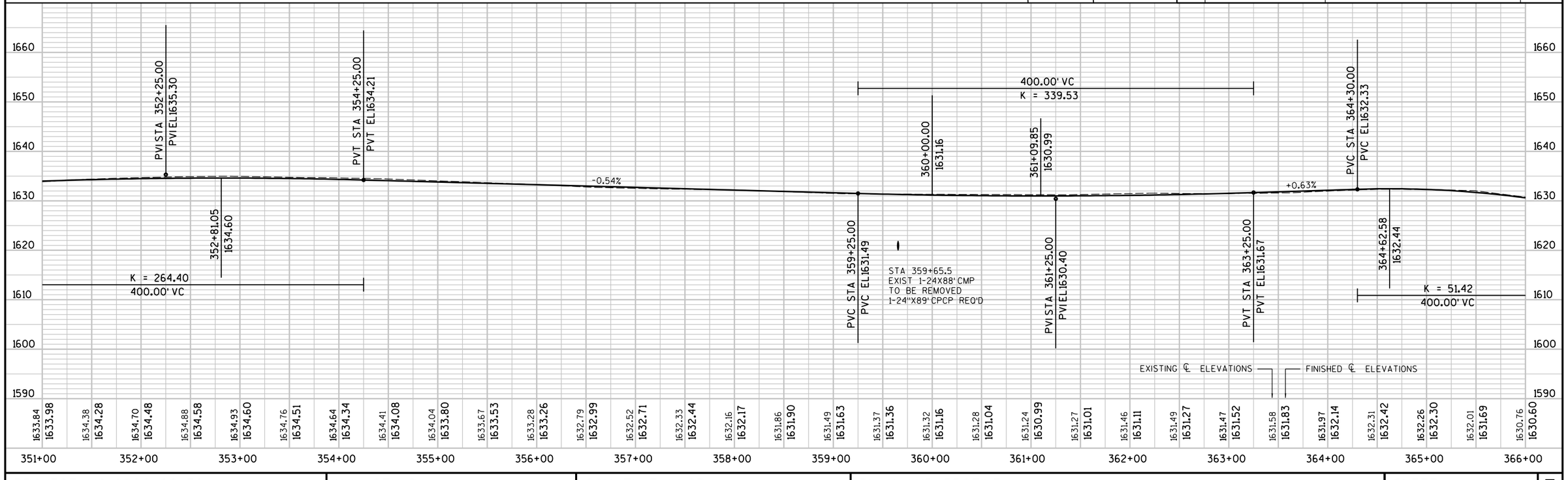

PROJECT NO: 8900-06-76	HWY: CTH D	COUNTY: TAYLOR	PLAN AND PROFILE	SHEET 65	E

FILE NAME : P:\PT\T\Tayhd\108326\CAD\PPTAYD18.dgn PLOT TIME : 12:21:29 PM PLOT DATE : 1/31/2013 PLOT BY : SEH PLOT NAME : PLOT SCALE : N/A

WISDOT/CADDS SHEET 40

MGS GUARDRAIL TERMINAL EAT
STA 370+46.9 TO STA 371+00.0, RT
STA 370+65.7 TO STA 371+18.8, LT
STA 373+00.0 TO STA 373+53.1, RT
STA 373+18.8 TO STA 373+71.8, LT

MGS GUARDRAIL 3
STA 371+00.0 TO STA 373+00.0, RT
STA 371+18.8 TO STA 373+71.8, LT

STA 375+56 LT
CONSTRUCT FE
EXISTING PIPE REMAINS

N

STA 380+66 LT
CONSTRUCT FE
EXISTING PIPE REMAINS

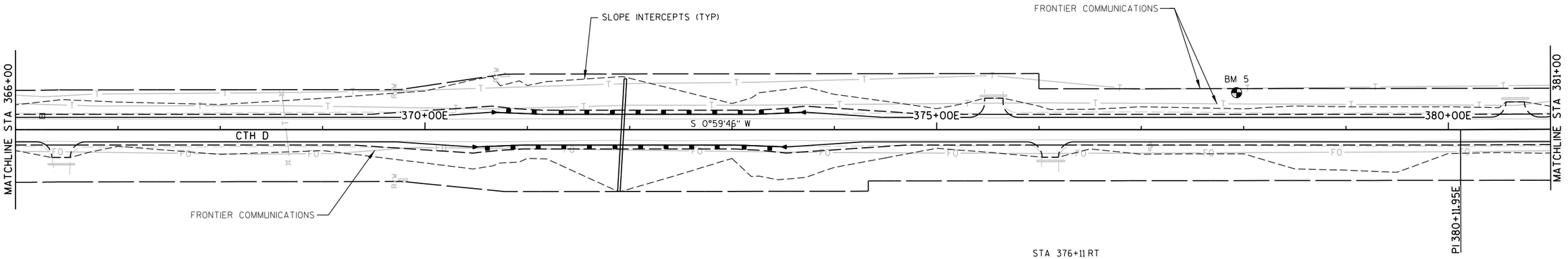

STA 376+11 RT
CONSTRUCT AGG PE
EXISTING PIPE REMAINS

STA 366+44 RT
CONSTRUCT AGG PE
EXISTING PIPE REMAINS

5

5

BENCHMARK TABLE

NO	STATION	DESCRIPTION	ELEV
5	377+93.1 36.2' LT	SET 3/8" SPIKE IN PP EAST OF CTH D 125' SOUTH OF FIRE NUMBER N8265	1607.13

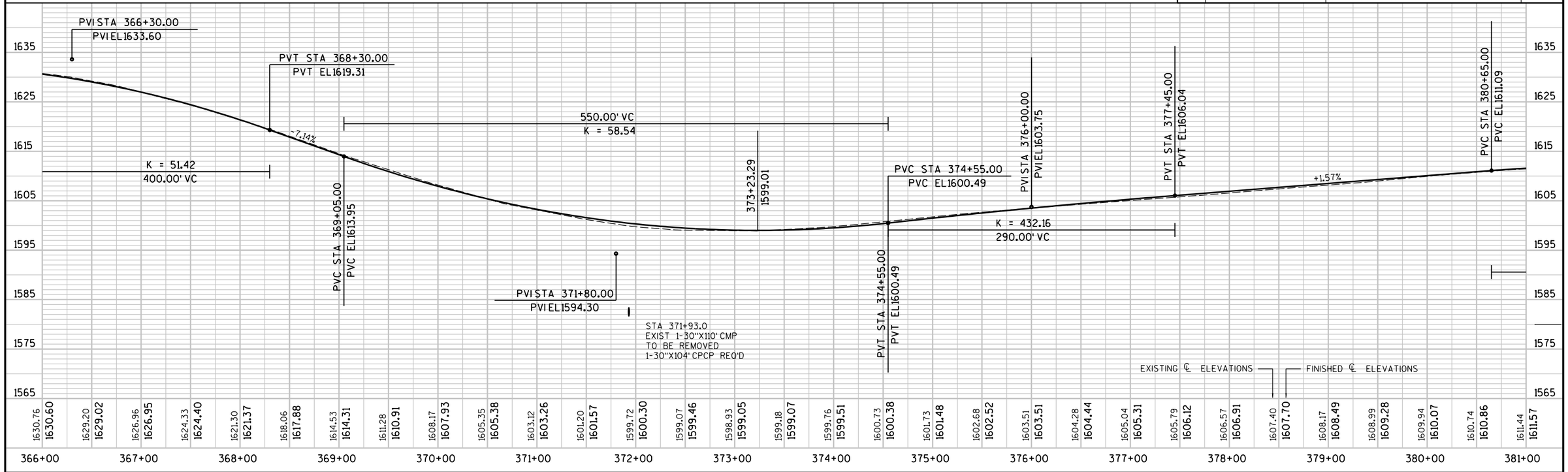

PROJECT NO: 8900-06-76	HWY: CTH D	COUNTY: TAYLOR	PLAN AND PROFILE	SHEET 66	E

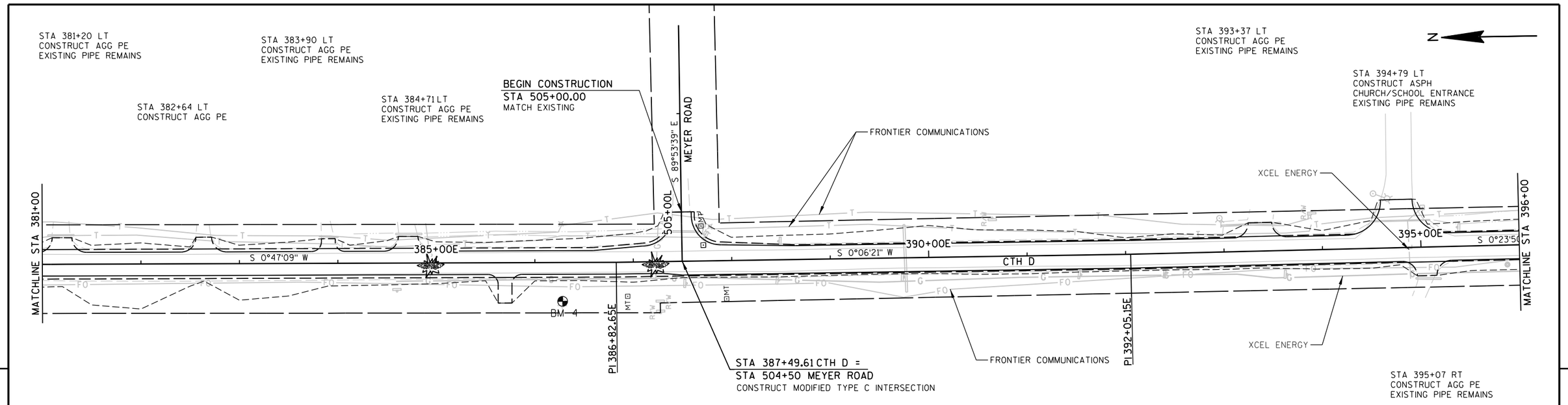

5

5

BENCHMARK TABLE

NO	STATION	DESCRIPTION	ELEV
4	386+28.1 39.5' RT	SET 3/8" SPIKE IN 20" PINE 75'± NORTH OF MEYER RD WEST OF CTH D	1600.25

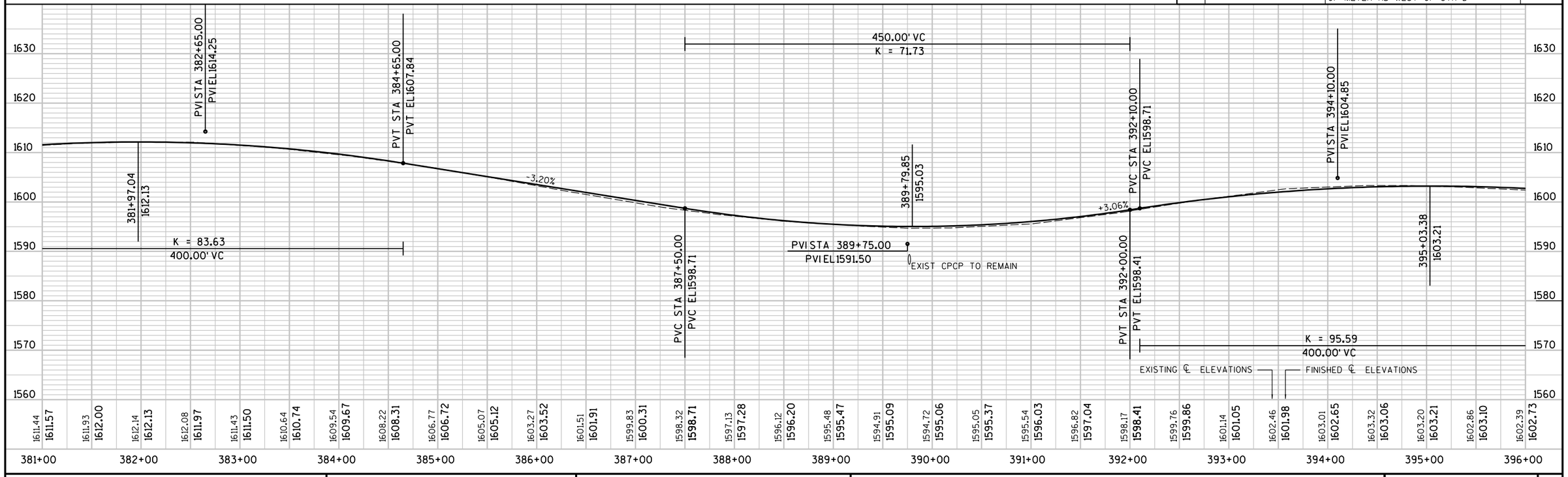

PROJECT NO: 8900-06-76	HWY: CTH D	COUNTY: TAYLOR	PLAN AND PROFILE	SHEET 67	E

STA 398+91 LT
CONSTRUCT AGG PE
EXISTING PIPE REMAINS

STA 399+74 LT
CONSTRUCT AGG PE
EXISTING PIPE REMAINS

STA 404+51 LT
CONSTRUCT AGG PE
EXISTING PIPE REMAINS

STA 409+08 LT
CONSTRUCT AGG PE
EXISTING PIPE REMAINS

N

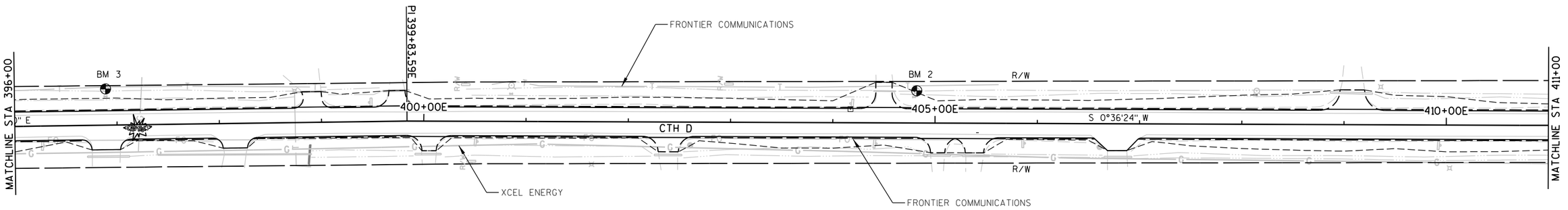

STA 406+78 RT
CONSTRUCT ASPH PE
EXISTING PIPE REMAINS

STA 396+89 RT
CONSTRUCT ASPH PE
EXISTING PIPE REMAINS

STA 398+15 RT
CONSTRUCT ASPH PE
EXISTING PIPE REMAINS

STA 400+05 RT
CONSTRUCT AGG PE
EXISTING PIPE REMAINS

STA 402+39 RT
CONSTRUCT AGG PE
EXISTING PIPE REMAINS

STA 405+02 RT
CONSTRUCT AGG PE
EXISTING PIPE REMAINS

STA 405+40 RT
CONSTRUCT AGG PE
EXISTING PIPE REMAINS

BENCHMARK TABLE

NO	STATION	DESCRIPTION	ELEV
2	404+81.83 31.5' LT	TOP OF HYDRANT NUT EAST OF CTH D @ GRAVEL ENTRANCE TO BALL FIELD BETWEEN SCHOOLS ACROSS FROM HOUSE 119	1592.46
3	396+89.85 35.5' LT	TOP OF HYDRANT NUT EAST CTH D AT ELEMENTARY SCHOOL ACROSS FROM HOUSE #1235 125'± SOUTH OF SCHOOL ENTRANCE	1600.65

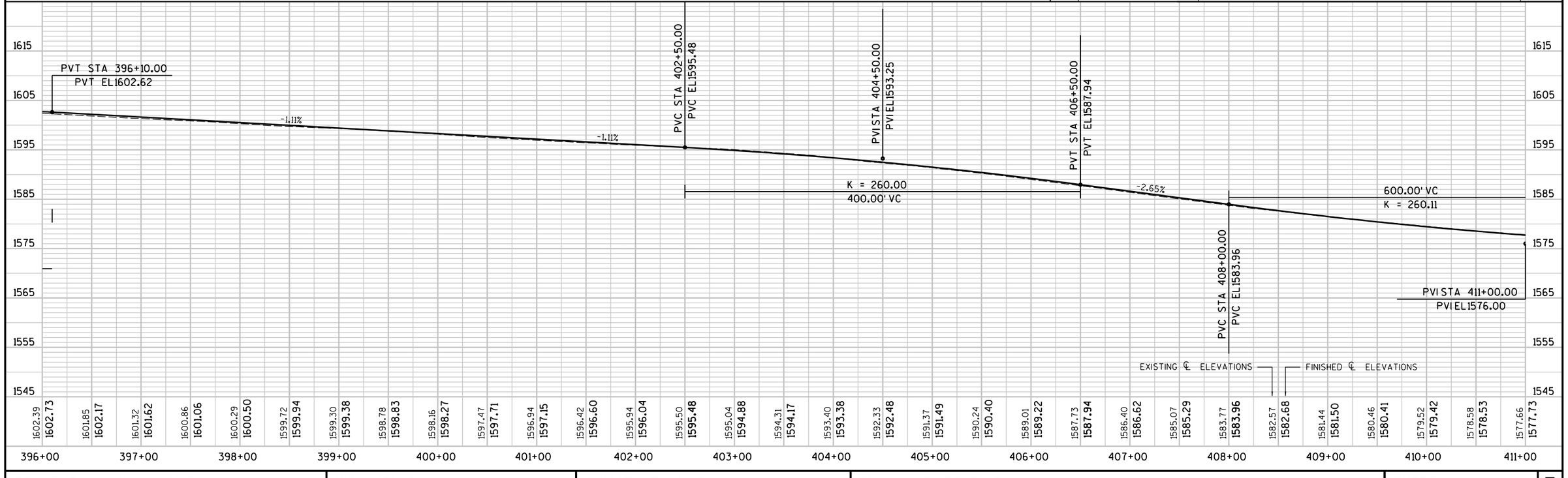

5

5

PROJECT NO: 8900-06-76	HWY: CTH D	COUNTY: TAYLOR	PLAN AND PROFILE	SHEET 68	E

Standard Detail Drawing List

08E08-03	TYPICAL INSTALLATIONS OF EROSION BALES / TEMPORARY DITCH CHECKS
08E09-06	SILT FENCE
08E11-02	TURBIDITY BARRIER
09A01-13A	AT-GRADE SIDE ROAD INTERSECTION, TYPES "B1", "B2", "C" AND D AND TEE INTERSECTION BYPASS LANE
14B15-07A	STEEL PLATE BEAM GUARD, CLASS "A" INSTALLATION & ELEMENTS
14B15-07B	STEEL PLATE BEAM GUARD, CLASS "A" INSTALLATION & ELEMENTS
14B15-07C	STEEL PLATE BEAM GUARD, CLASS "A", INSTALLATION & ELEMENTS
14B24-07A	STEEL PLATE BEAM GUARD ENERGY ABSORBING TERMINAL
14B24-07B	STEEL PLATE BEAM GUARD ENERGY ABSORBING TERMINAL
14B24-07C	STEEL PLATE BEAM GUARD ENERGY ABSORBING TERMINAL
14B27-01A	STEEL PLATE BEAM GUARD SHORT RADIUS TERMINAL
14B27-01B	STEEL PLATE BEAM GUARD SHORT RADIUS TERMINAL
14B27-01C	STEEL PLATE BEAM GUARD SHORT RADIUS TERMINAL
14B42-02A	MIDWEST GUARDRAIL SYSTEM (MGS) GUARDRAIL
14B42-02B	MIDWEST GUARDRAIL SYSTEM (MGS) GUARDRAIL
14B42-02C	MIDWEST GUARDRAIL SYSTEM (MGS) GUARDRAIL
14B44-01A	MIDWEST GUARDRAIL SYSTEM ENERGY ABSORBING TERMINAL (MGS)
14B44-01B	MIDWEST GUARDRAIL SYSTEM ENERGY ABSORBING TERMINAL (MGS)
14B44-01C	MIDWEST GUARDRAIL SYSTEM ENERGY ABSORBING TERMINAL (MGS)
14B45-03A	MIDWEST GUARDRAIL SYSTEM THRIE BEAM TRANSITION (MGS)
14B45-03B	MIDWEST GUARDRAIL SYSTEM THRIE BEAM TRANSITION (MGS)
14B45-03C	MIDWEST GUARDRAIL SYSTEM THRIE BEAM TRANSITION (MGS)
14B45-03D	MIDWEST GUARDRAIL SYSTEM THRIE BEAM TRANSITION (MGS)
14B45-03E	MIDWEST GUARDRAIL SYSTEM THRIE BEAM TRANSITION (MGS)
14B45-03F	MIDWEST GUARDRAIL SYSTEM THRIE BEAM TRANSITION (MGS)
14B45-03G	MIDWEST GUARDRAIL SYSTEM THRIE BEAM TRANSITION (MGS)
14B45-03H	MIDWEST GUARDRAIL SYSTEM THRIE BEAM TRANSITION (MGS)
14B45-03I	MIDWEST GUARDRAIL SYSTEM THRIE BEAM TRANSITION (MGS)
14B45-03J	MIDWEST GUARDRAIL SYSTEM THRIE BEAM TRANSITION (MGS)
15C02-04A	BARRICADES AND SIGNS FOR MAINLINE CLOSURES
15C02-04B	BARRICADES AND SIGNS FOR MAINLINE CLOSURES
15C02-04C	DETOUR SIGNING FOR MAINLINE CLOSURES
15C03-01	BARRICADES AND SIGNS FOR SIDEROAD CLOSURES
15C08-15A	PAVEMENT MARKING (MAINLINE)
15C08-15B	PAVEMENT MARKING (INTERSECTIONS)
15C08-15F	PAVEMENT MARKING (ISLANDS, STOP LINE & CROSS WALK)

6

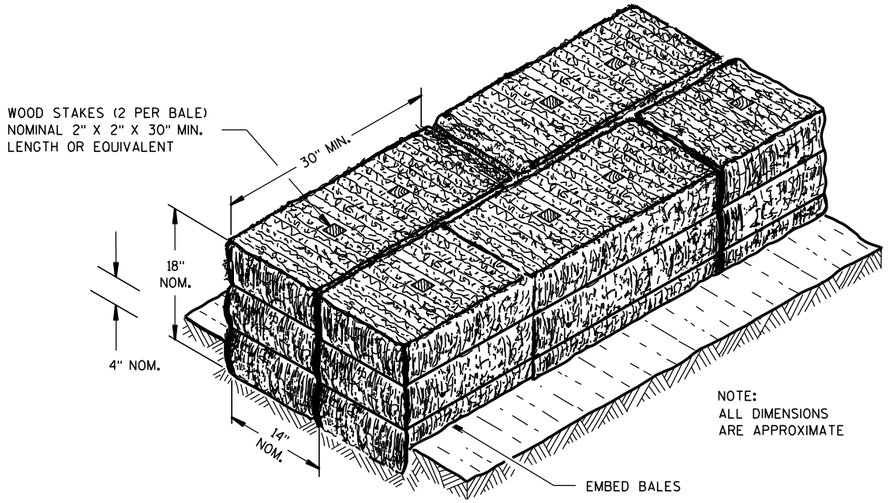

SECTION A-A

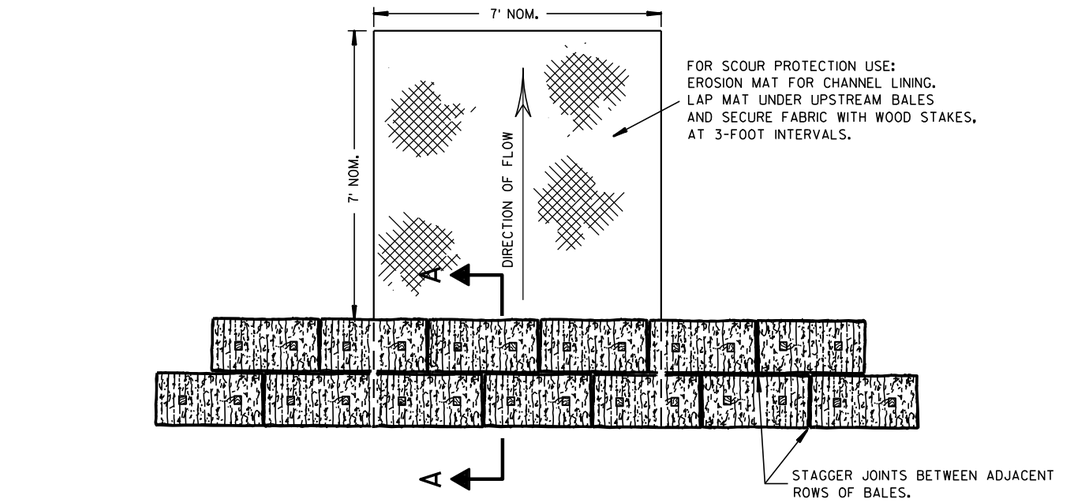

PLAN VIEW

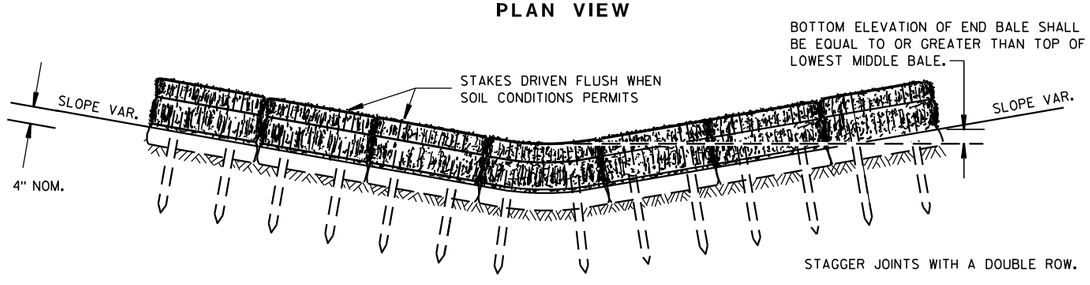

FRONT ELEVATION

TEMPORARY DITCH CHECK USING EROSION BALES (1)

GENERAL NOTES

DETAILS OF CONSTRUCTION, MATERIALS AND WORKMANSHIP NOT SHOWN ON THIS DRAWING SHALL CONFORM TO THE PERTINENT REQUIREMENTS OF THE STANDARD SPECIFICATIONS AND THE APPLICABLE SPECIAL PROVISIONS.

(1) TEMPORARY DITCH CHECKS EITHER EROSION BALES OR MANUFACTURED SHALL BE PAID FOR UNDER THE BID ITEM OF TEMPORARY DITCH CHECK. THE DEPARTMENT WILL NOT PAY FOR TEMPORARY DITCH CHECKS CONSTRUCTED OF A SINGLE ROW OF EROSION BALES.

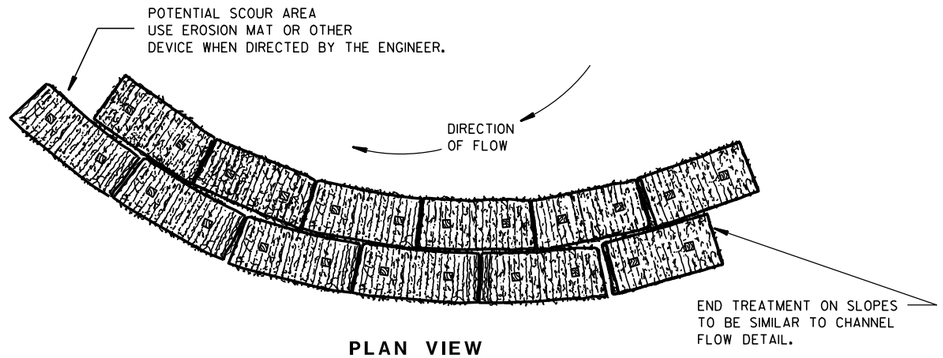

PLAN VIEW

WHEN ALTERING THE DIRECTION OF FLOW

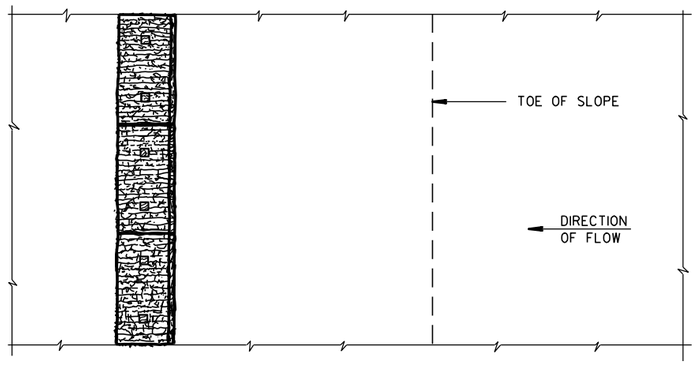

PLAN VIEW

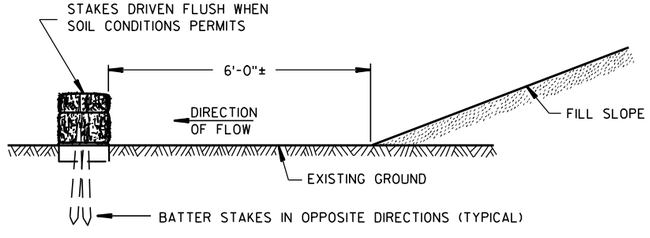

FRONT ELEVATION

WHEN EXISTING GROUND SLOPES AWAY FROM FILL SLOPE

EROSION BALES FOR SHEET FLOW

TYPICAL INSTALLATIONS OF EROSION BALES / TEMPORARY DITCH CHECKS

STATE OF WISCONSIN
DEPARTMENT OF TRANSPORTATION

APPROVED

6/04/02 — DATE

/S/ Beth Cannestra — CHIEF ROADWAY DEVELOPMENT ENGINEER

FHWA

6

S.D.D. 8 E 8-3

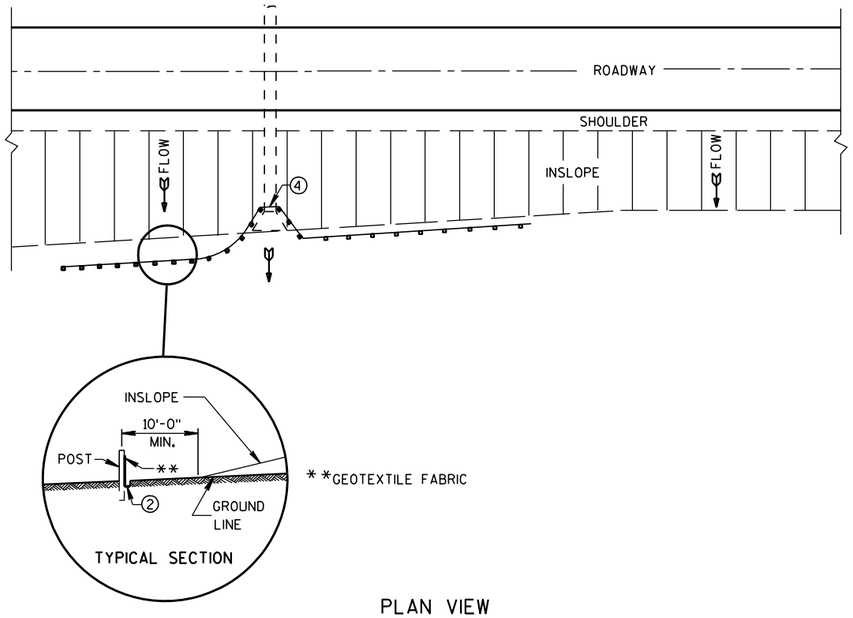

PLAN VIEW

TYPICAL APPLICATION OF SILT FENCE

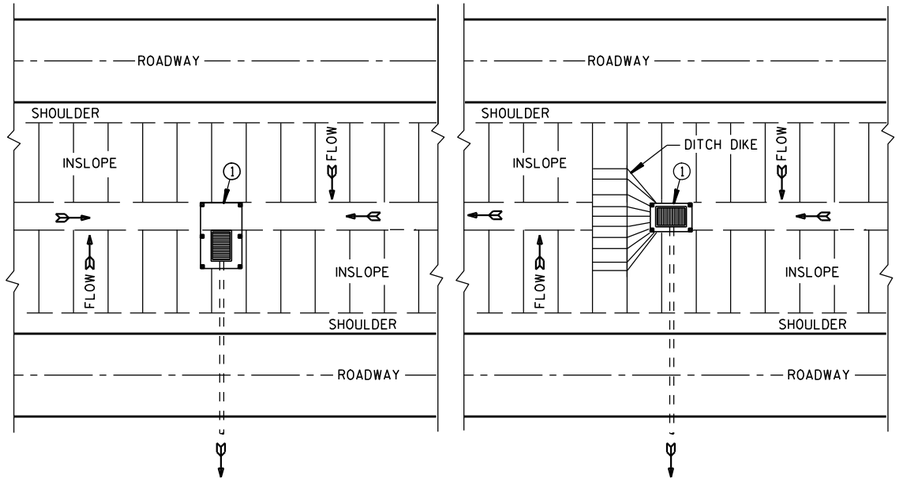

PLAN VIEW

SILT FENCE AT MEDIAN SURFACE DRAINS

GENERAL NOTES

DETAILS OF CONSTRUCTION NOT SHOWN ON THIS DRAWING SHALL CONFORM TO THE PERTINENT REQUIREMENTS OF THE STANDARD SPECIFICATIONS AND APPLICABLE SPECIAL PROVISIONS.

① HORIZONTAL BRACE REQUIRED WITH 2" X 4" WOODEN FRAME OR EQUIVALENT AT TOP OF POSTS.

② FOR MANUAL INSTALLATIONS THE TRENCH SHALL BE A MINIMUM OF 4" WIDE & 6" DEEP TO BURY AND ANCHOR THE GEOTEXTILE FABRIC. FOLD MATERIAL TO FIT TRENCH AND BACKFILL & COMPACT TRENCH WITH EXCAVATED SOIL.

③ WOOD POSTS SHALL BE A MINIMUM SIZE OF 1⅛" X 1⅛" OF OAK OR HICKORY.

④ SILT FENCE TO EXTEND ACROSS THE TOP OF THE PIPE.

⑤ CONSTRUCT SILT FENCE FROM A CONTINUOUS ROLL IF POSSIBLE BY CUTTING LENGTHS TO AVOID JOINTS. IF A JOINT IS NECESSARY USE ONE OF THE FOLLOWING TWO METHODS; A) OVERLAP THE END POSTS AND TWIST, OR ROTATE, AT LEAST 180 DEGREES, B) HOOK THE END OF EACH SILT FENCE LENGTH.

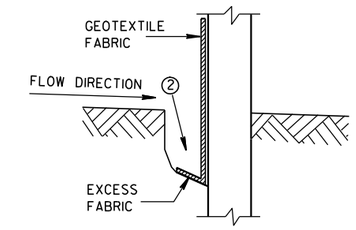

TRENCH DETAIL

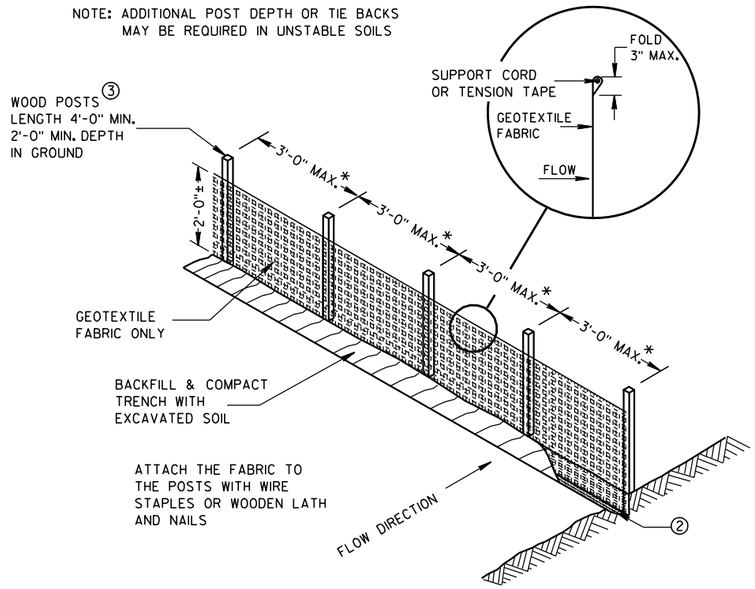

SILT FENCE

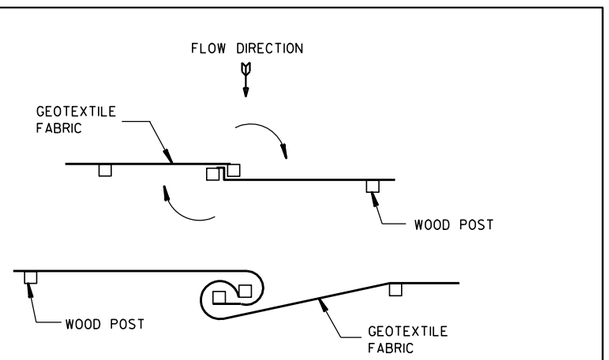

TWIST METHOD

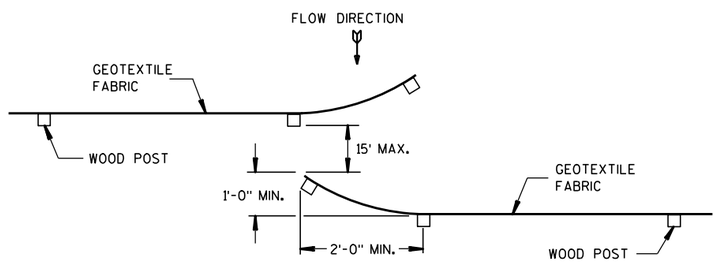

HOOK METHOD

JOINING TWO LENGTHS OF SILT FENCE ⑤

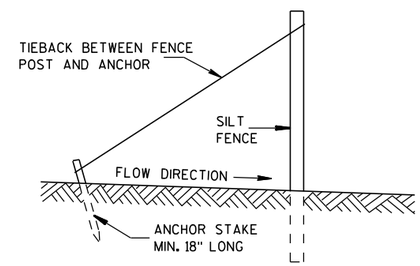

SILT FENCE TIE BACK

(WHEN REQUIRED BY THE ENGINEER)

SILT FENCE	
STATE OF WISCONSIN DEPARTMENT OF TRANSPORTATION	
APPROVED	
4-29-05 DATE	/S/ Beth Cannestra CHIEF ROADWAY DEVELOPMENT ENGINEER
FHWA	

6

S.D.D. 8 E 9-6

6

S.D.D. 8 E 9-6

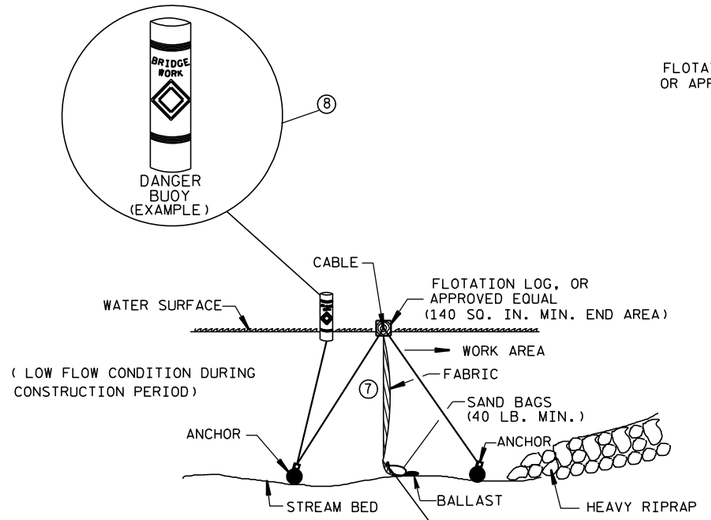

SECTION B-B

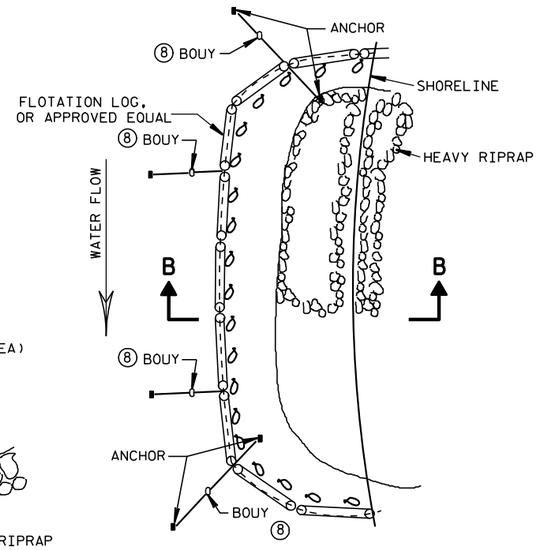

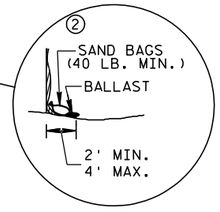

TURBIDITY BARRIER FLOAT ALTERNATIVE
CAUTION - SEE NOTE 6

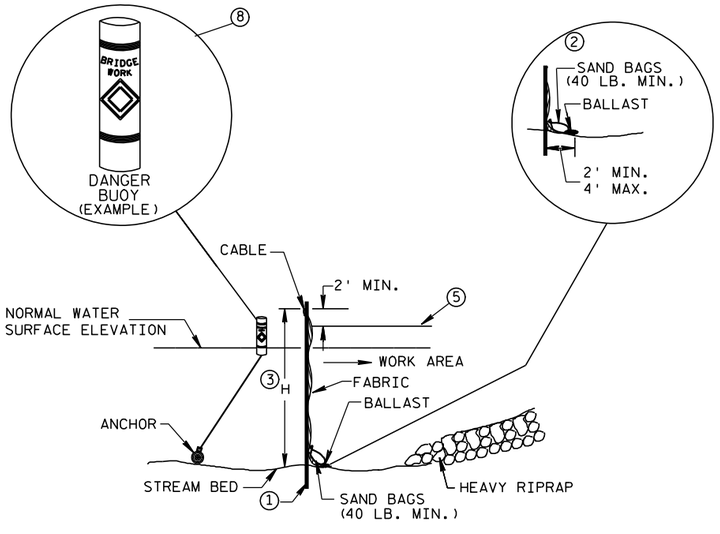

SECTION A-A

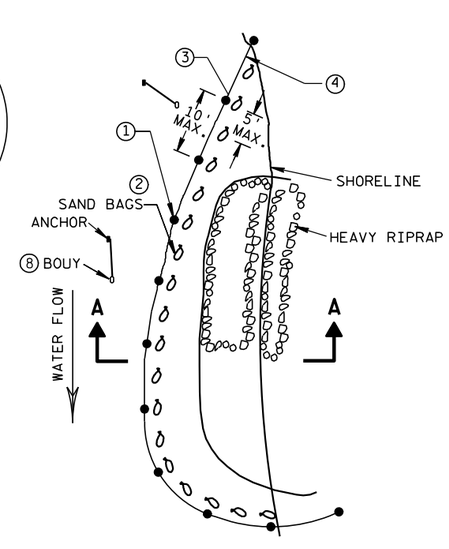

PLAN VIEW

TURBIDITY BARRIER STANDARD POST INSTALLATION

TURBIDITY BARRIER PLACEMENT DETAILS

GENERAL NOTES

DETAILS OF CONSTRUCTION, MATERIALS AND WORKMANSHIP NOT SHOWN ON THIS DRAWING SHALL CONFORM TO THE PERTINENT REQUIREMENTS OF THE STANDARD SPECIFICATIONS AND THE APPLICABLE SPECIAL PROVISIONS.

TURBIDITY BARRIER MAY BE REMOVED AT THE ENGINEERS DISCRETION, WHEN PERMANENT EROSION CONTROL MEASURES HAVE BEEN ESTABLISHED.

① DRIVEN STEEL POSTS, PIPES, OR CHANNELS. LENGTH SHALL BE SUFFICIENT TO SECURELY SUPPORT BARRIER AT HIGH WATER ELEVATIONS.

② SANDBAGS TO BE USED AS ADDITIONAL BALLAST WHEN ORDERED BY THE ENGINEER TO MEET ADVERSE FIELD CONDITIONS. SPACE AS APPROPRIATE FOR SITE CONDITIONS.

③ WHEN BARRIER HEIGHT, H, EXCEEDS 8 FT., POST SPACING MAY NEED TO BE DECREASED.

④ IN WATERWAYS SUBJECT TO FLUCTUATING WATER ELEVATIONS, PROVISIONS SHOULD BE MADE TO ALLOW THE WATER TO EQUALIZE ON EACH SIDE OF THE BARRIER. THIS MAY BE ACCOMPLISHED BY LEAVING A PORTION OF THE BARRIER OPEN ON THE UPSTREAM END.

⑤ ESTIMATED HIGH WATER ELEVATION DURING CONSTRUCTION PERIOD. MIMIMUM BARRIER HEIGHT SHALL BE 2'GREATER THAN EITHER THE O2 ELEVATION OR THE ESTIMATED HIGH WATER ELEVATION DURING CONSTRUCTION, WICHEVER IS GREATER.

⑥ FLOAT ALTERNATIVE WILL ONLY BE ALLOWED WITH WRITTEN APPROVAL OF THE ENGINEER, AND IS MEANT FOR LOCATIONS WHERE BED ROCK PREVENTS THE INSTALLATION OF POSTS.

⑦ ALLOW SUFFICIENT SLACK VERTICALLY AND HORIZONTALLY SO THAT SEDIMENT BUILD UP WILL NOT SEPARATE OR LOWER THE TURBIDITY BARRIER.

⑧ USE AS DIRECTED BY COAST GUARD OR DNR PERMIT WHEN WORKING IN NAVIGABLE WATERWAYS.

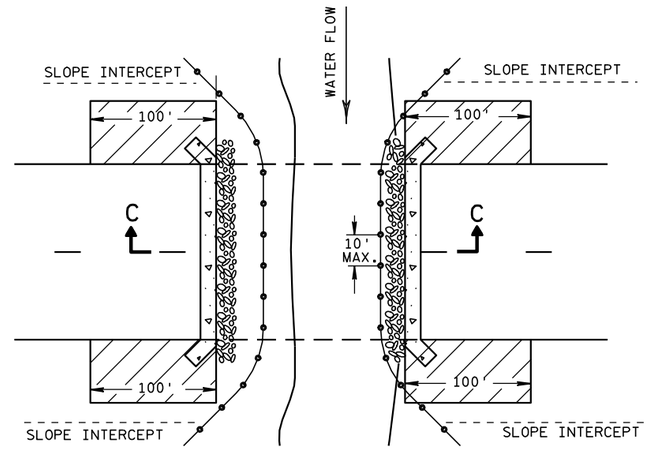

PLAN VIEW

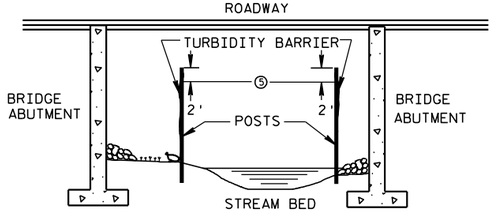

SECTION C-C

TURBIDITY BARRIER DETAIL SHOWING TYPICAL PLACEMENT AT STRUCTURES

TURBIDITY BARRIER	
STATE OF WISCONSIN DEPARTMENT OF TRANSPORTATION	
APPROVED	
6/04/02 DATE	/S/ Beth Cannestra CHIEF ROADWAY DEVELOPMENT ENGINEER
FHWA	

6

S.D.D. 8 E 11-2

6

S.D.D. 8 E 11-2

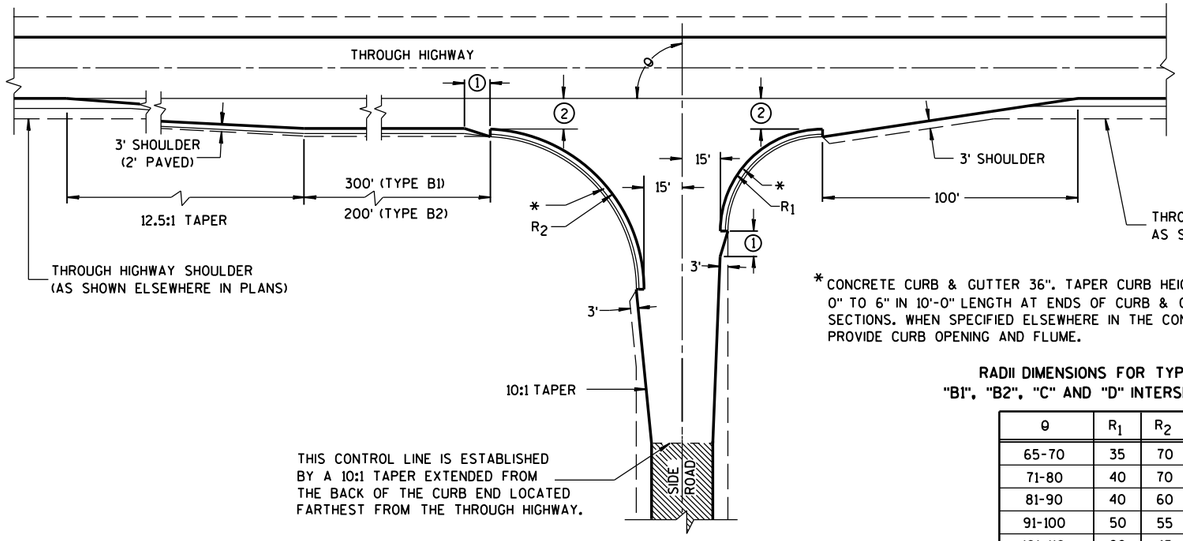

TYPE "B1" AND "B2"

*CONCRETE CURB & GUTTER 36". TAPER CURB HEIGHT 0" TO 6" IN 10'-0" LENGTH AT ENDS OF CURB & GUTTER SECTIONS. WHEN SPECIFIED ELSEWHERE IN THE CONTRACT, PROVIDE CURB OPENING AND FLUME.

RADII DIMENSIONS FOR TYPES "B1", "B2", "C" AND "D" INTERSECTIONS

θ	R_1	R_2
65-70	35	70
71-80	40	70
81-90	40	60
91-100	50	55
101-110	60	45

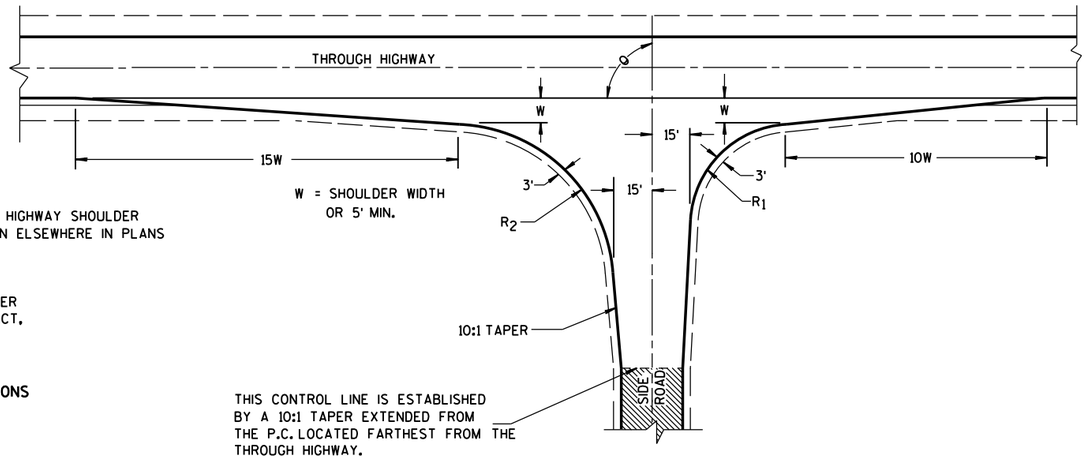

TYPE "C"

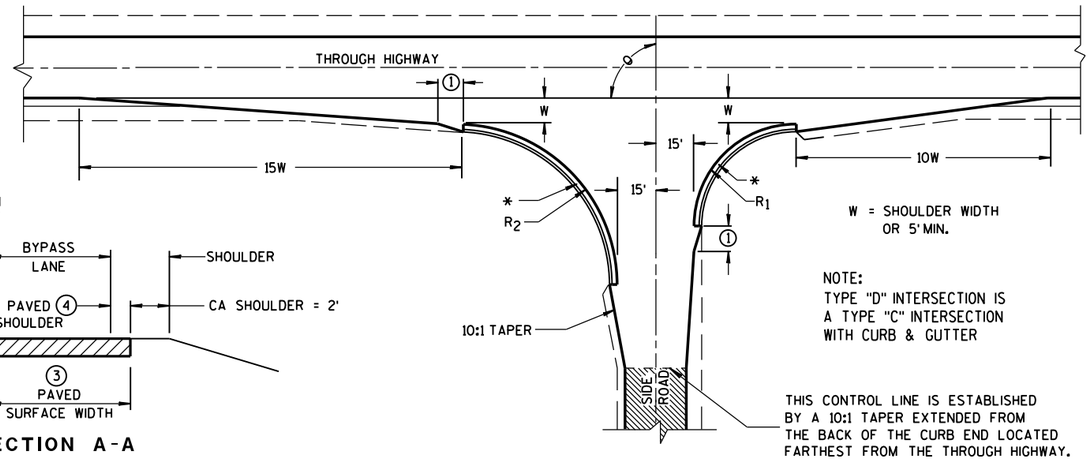

TYPE "D"

GENERAL NOTES

DESIGNS MAY BE USED INTERCHANGEABLY IN COMBINATION OR SEPARATELY FOR ANY ONE COMPLETE INTERSECTION DEPENDING UPON INTERSECTION ANGLE AND SURFACING OF EACH APPROACH ROADWAY.

SIDE ROAD SURFACING NOTE

WHEN THE SIDE ROAD IS NOT PRESENTLY PAVED, PAVEMENT SHALL BE PLACED TO THE LIMITS SHOWN UNLESS OTHERWISE PROVIDED IN THE CONTRACT. WHERE THE CONSTRUCTION LIMITS ARE BEYOND THE PAVING LIMITS, CRUSHED AGGREGATE SURFACING SHALL BE PLACED BETWEEN THE PAVING LIMITS AND CONSTRUCTION LIMITS.

WHEN THE SIDE ROAD IS PRESENTLY PAVED, NEW PAVEMENT SHALL BE PLACED TO THE LIMITS OF DESIGN AS SHOWN AND BEYOND, IF NECESSARY, TO MEET EXISTING PAVEMENT.

WHEN THE SIDE ROAD IS THE CONSTRUCTION PROJECT, THE INTERSECTION SURFACING SHALL BE THE SAME AS FOR THE PROJECT.

EXISTING PAVED SURFACE

BYPASS LANE

(1) 10-FT TYPICAL.

(2) 12-FT** PLUS ADDITIONAL WIDTH FOR BIKE LANE IF SHOWN ELSEWHERE IN THE PLAN.

**10-FT MAY BE USED ON TYPE B2 ON RESURFACING PROJECTS IF SPECIFIED IN THE CONTRACT.

(3) BYPASS LANE PAVED SURFACE WIDTH OUTSIDE OF TRAVEL LANE
-ASPHALT = 12-FT PLUS PAVED SHOULDER WIDTH.
-PC CPNCRETE = 13-FT PLUS PAVED SHOULDER WIDTH.

(4) BYPASS LANE PAVED SHOULDER WIDTH = THE GREATER OF 1-FT OR THE PAVED SHOULDER WIDTH OF THE THROUGH HIGHWAY.

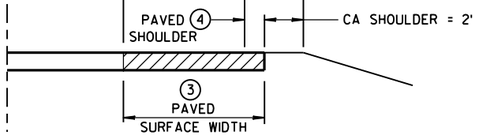

SECTION A-A
(SHOWING BYPASS LANE AND SHOULDER)

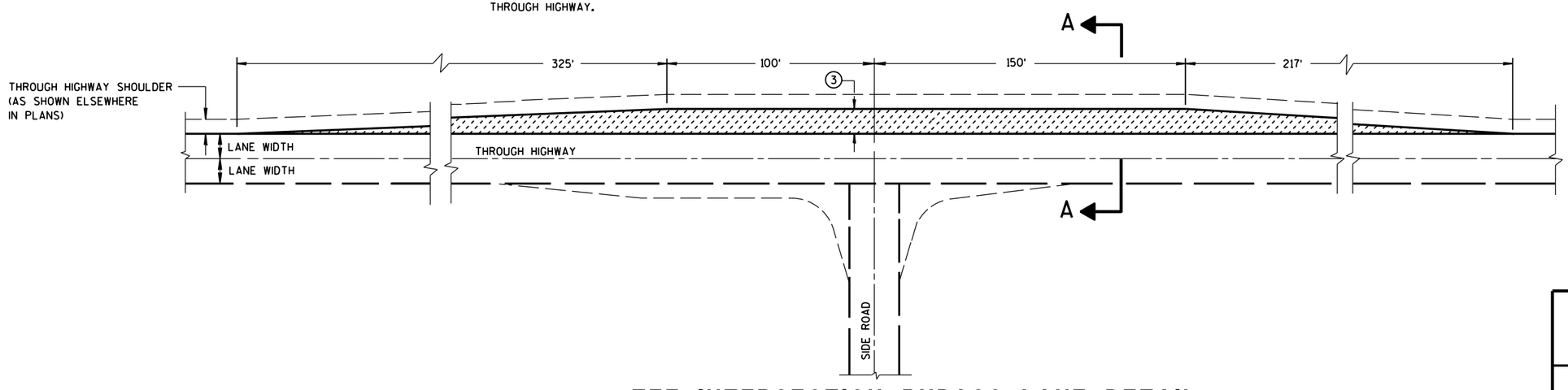

TEE INTERSECTION BYPASS LANE DETAIL

AT-GRADE SIDE ROAD INTERSECTION, TYPES "B1", "B2", "C" AND "D" AND TEE INTERSECTION BYPASS LANE

STATE OF WISCONSIN
DEPARTMENT OF TRANSPO

6
S.D.D. 9 A 1-13a

GENERAL NOTES

DETAILS OF CONSTRUCTION, MATERIALS AND WORKMANSHIP NOT SHOWN ON THIS DRAWING SHALL CONFORM TO THE PERTINENT REQUIREMENTS OF THE STANDARD SPECIFICATIONS, AND THE APPLICABLE SPECIAL PROVISIONS.

(1) W6 X 9 OR W6 X 8.5 STEEL POSTS AND NOTCHED PLASTIC BLOCKOUTS ARE ACCEPTABLE ALTERNATIVES FOR 6" X 8" WOOD POSTS WITH WOOD OR PLASTIC BLOCKOUTS. USE APPROVED NOTCHED PLASTIC BLOCKOUTS WITH STEEL POSTS. APPROVED PLASTIC BLOCKOUT DESIGNS MAY VARY FROM THIS TYPICAL DETAIL WHEN USED IN CONJUNCTION WITH STEEL POSTS.

DO NOT MIX STEEL POSTS AND WOOD POSTS IN A SINGLE INSTALLATION.

(2) USE STRUCTURAL STEEL POSTS CONFORMING TO ASTM A 36. GALVANIZED POSTS ACCORDING TO AASHTO M 111. EITHER SET THE POSTS IN DRILLED HOLES OR DRIVE TO GRADE. REMOVE MUSHROOMING CAUSED BY DRIVING AND REPAIR DAMAGED SPELTER COATING ON GALVANIZED POSTS.

(3) INSTALL STEEL POSTS WITH HOLES ON APPROACHING TRAFFIC SIDE.

(4) USE EITHER WOOD OR APPROVED PLASTIC BLOCKOUTS ON WOOD POSTS.

(5) IF THE DISTANCE FROM BACK OF POST TO SHOULDER HINGE POINT IS LESS THAN 2 FEET INSTALL LONGER POST AT HALF POST SPACING, W BEAM (LHW).

(6) IF ROCK IS ENCOUNTERED DURING EXCAVATION, THE ENGINEER MAY APPROVE USING A 12 INCH DIAMETER POST HOLE EXTENDING 20 INCHES DEEP INTO THE ROCK. PLACE GRANULAR MATERIAL IN THE BOTTOM OF THE HOLE APPROXIMATELY 2½ INCHES DEEP. CUT THE POSTS TO LENGTH AND PLACE IN YHE HOLE. BACKFILL WITH MATERIAL EXCAVATED FROM THE HOLE AND COMPACT ADEQUATEY.

INSTALL BEAM GUARD SECTIONS AND ALL NECESSARY HARDWARE ACCORDING TO THE APPLICABLE PLAN AND CURRENT STANDARD AND SUPPLEMENTAL SPECIFICATIONS.

ALL DIMENSIONS ARE SUBJECT TO MANUFACTURER'S TOLERANCES EXCEPT WHERE ALLOWABLE TOLERANCES ARE SHOWN.

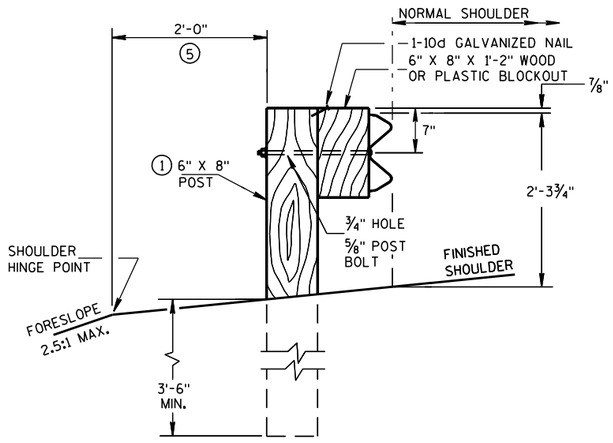

END VIEW
LOCATED ALONG A ROADWAY SHOULDER
STANDARD INSTALLATION

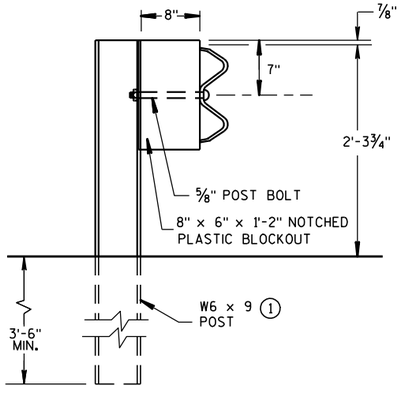

END VIEW
STEEL POST & NOTCHED
PLASTIC BLOCKOUT ALTERNATIVE
STANDARD INSTALLATION

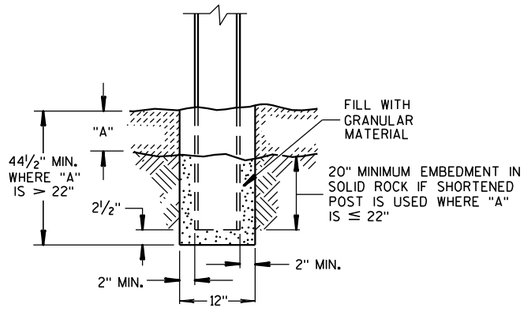

END VIEW
SETTING STEEL OR WOOD POST IN ROCK (6)

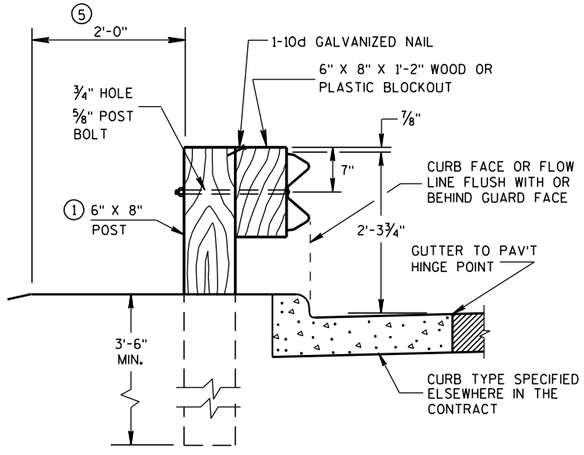

END VIEW
LOCATED ALONG A CURBED ROADWAY

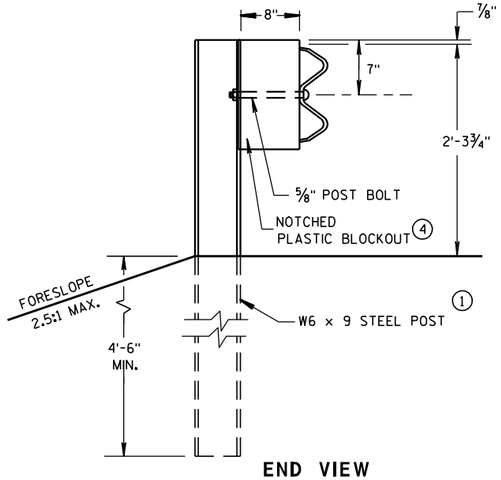

END VIEW
LONGER POST AT HALF
POST SPACING W BEAM
(LHW)

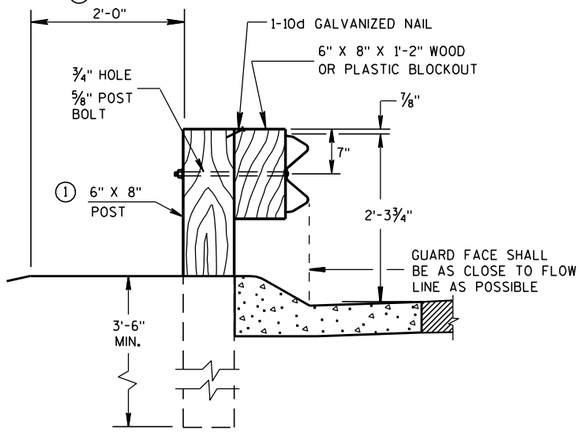

END VIEW
LOCATED ALONG A
MOUNTABLE CURBED ROADWAY

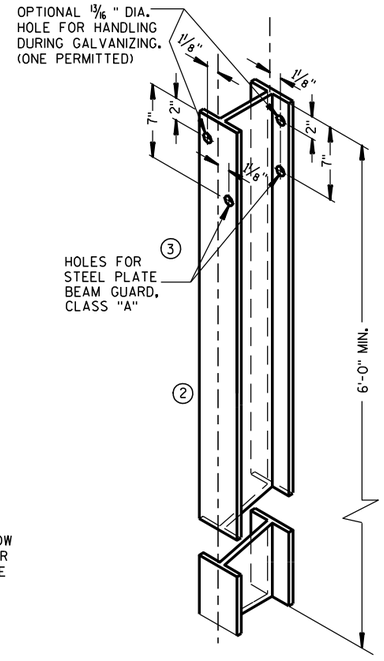

STEEL POST &
HOLE PUNCHING DETAIL
(W6 X 9) (1)

ALL HOLES 13/16" DIAMETER EXCEPT AS NOTED

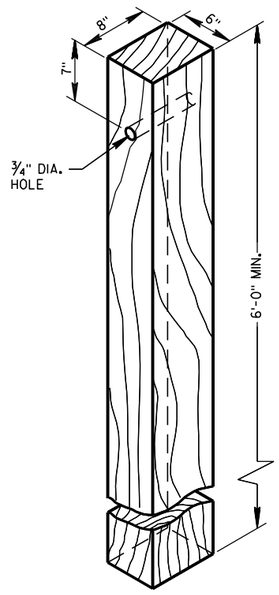

WOOD POST
(6"X8") NOMINAL

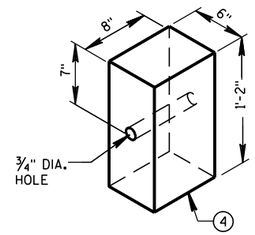

WOOD OR PLASTIC
BLOCKOUT FOR
WOOD POSTS

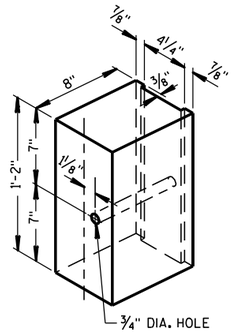

TYPICAL NOTCHED (1)
PLASTIC BLOCKOUT
FOR STEEL POSTS

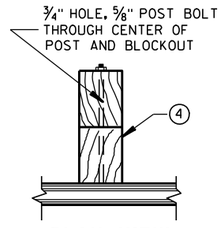

PLAN VIEW
WOOD POST,
BLOCKOUT & BEAM

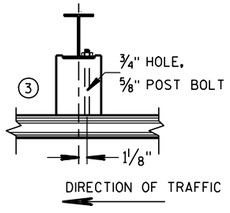

PLAN VIEW
STEEL POST, NOTCHED
PLASTIC BLOCKOUT & BEAM

STEEL PLATE BEAM GUARD,
CLASS "A"
INSTALLATION & ELEMENTS

STATE OF WISCONSIN
DEPARTMENT OF TRANSPORTATION

TYPICAL INSTALLATION OF STEEL PLATE BEAM GUARD

6
S.D.D. 14 B 15-7a

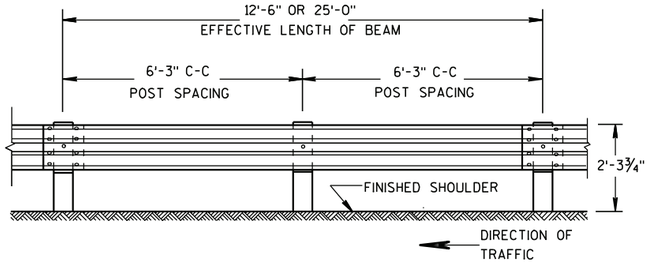

FRONT VIEW

POST SPACING STANDARD INSTALLATION

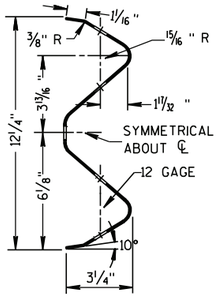

SECTION THRU W BEAM

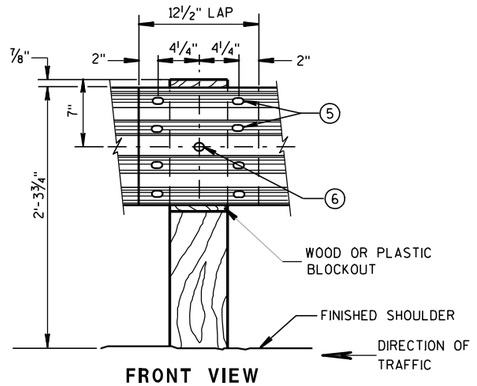

FRONT VIEW

BEAM SPLICE AT WOOD POST AND POST MOUNTING DETAIL

GENERAL NOTES

1. PROVIDE TYPE "H" SILVER REFLECTIVE SHEETING ON ALL REFLECTORS EXCEPT THOSE LOCATED ALONG THE LEFT EDGE OF ONE-WAY ROADWAYS, WHICH SHALL BE PROVIDED WITH TYPE "H" YELLOW REFLECTIVE SHEETING.
2. DO NOT INSTALL REFLECTORS ON THE FIRST 50 FEET OF THE APPROACH END OF THE ENERGY ABSORBING TERMINAL.
3. REVERSE EVERY OTHER REFLECTOR FOR 2-WAY VISIBILITY. THE CONTRACTOR MAY FURNISH TWO-SIDED REFLECTORS IN LIEU OF ONE-SIDED REFLECTORS.
4. PROVIDE AN ANGLE OF BEND OF 90° ± 1° FOR TWO-SIDED REFLECTORS.
5. 8 - 5/8" ϕ X 2 " BUTTON HEAD BOLTS WITH OVAL SHOULDERS & RECESS NUTS.
6. 5/8" ϕ X 1'-6" BUTTON HEAD BOLT AND AND RECESS NUT WITH ROUND WASHER UNDER NUT.

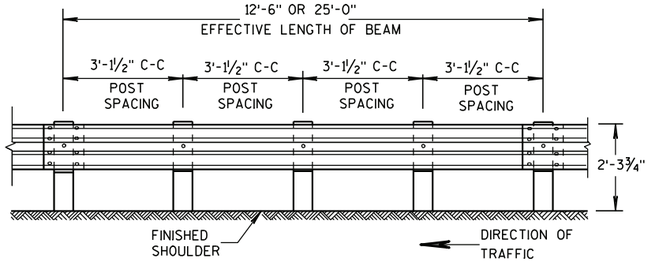

FRONT VIEW

POST SPACING FOR LONGER POST AT HALF POST SPACING W BEAM (LHW)

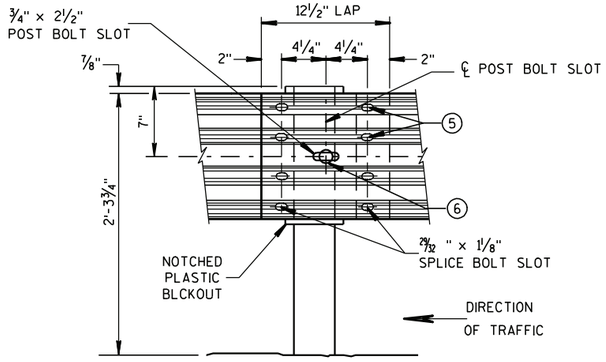

FRONT VIEW

BEAM SPLICE AT STEEL POST

TYPICAL SPLICING DETAILS OF STEEL PLATE BEAM GUARD

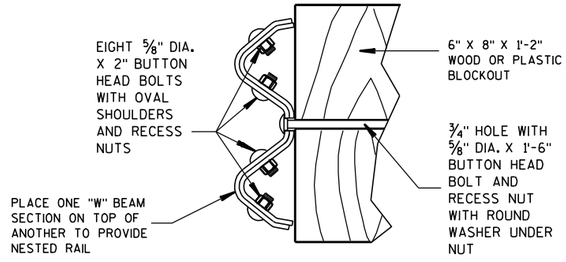

NESTED W BEAM (NW)

USE ALL OTHER STANDARD BEAM GUARD DETAILS FOR CONSTRUCTING NESTED W BEAM (NW)

REFLECTOR SPACING (2)

	BEAM GUARD LENGTH	REFLECTOR SPACING	NO. SURFACES REFLECTORIZED	MIN. NO. REFLECTORS
ONE WAY TRAFFIC	< 200'	50' C-C	1	3
	> 200'	100' C-C	1	
TWO WAY TRAFFIC	< 200'	25' C-C	1 (3)	6
	> 200'	50' C-C	1	
TWO WAY TRAFFIC	< 200'	50' C-C	2	3
	> 200'	100' C-C	2 (4)	

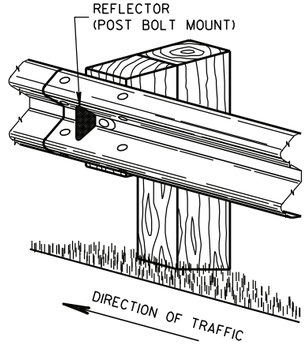

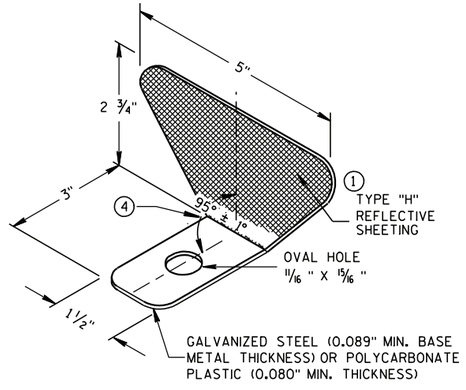

ONE SIDED REFLECTOR DETAIL AND TYPICAL INSTALLATION (1)

STEEL PLATE BEAM GUARD, CLASS "A", INSTALLATION & ELEMENTS

STATE OF WISCONSIN
DEPARTMENT OF TRANSPORTATION

6
S.D.D. 14 B 15-7b

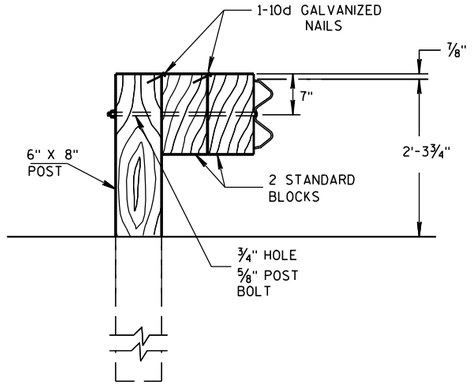

DETAIL FOR DOUBLE BLOCKS

THE NUMBER OF DOUBLE BLOCK POSTS WITHIN A BARRIER RUN IS UNLIMITED

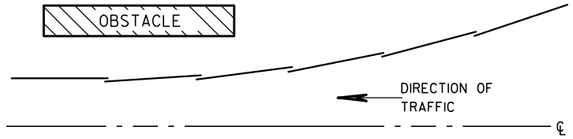

PLAN VIEW
BEAM LAPPING DETAIL

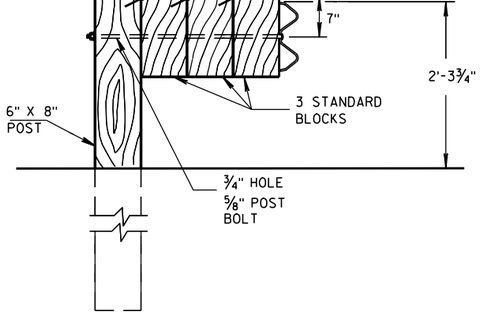

DETAIL FOR TRIPLE BLOCKS

TRIPLE BLOCK DETAIL IS LIMITED TO ONE LOCATION WITHIN A BEAM GUARD RUN.

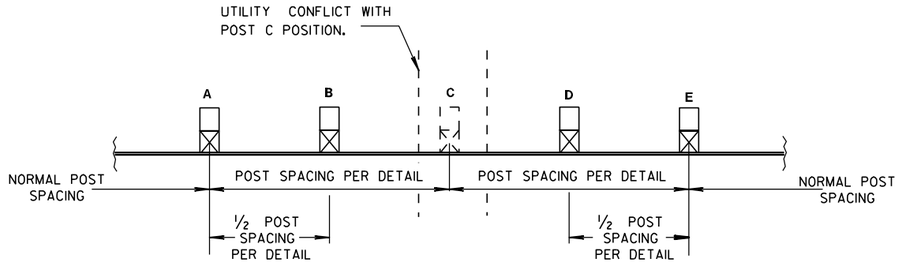

POST DRIVING FOR CONTINUOUS UNDERGROUND OBSTRUCTION

NOTES: USE DOUBLE OR TRIPLE BLOCKS WHEN UNDERGROUND OBSTACLES PREVENT THE POST FROM BEING INSTALLED.

DO NOT USE EXTRA BLOCKOUTS IF IT CAUSES THE POST TO BE DRIVEN BEYOND SHOULDER HINGE POINT OR CAUSES A FIXED OBJECT TO BE WITHIN THE DEFLECTION DISTANCE OF THE BARRIER.

STEEL PLATE BEAM GUARD, CLASS "A", INSTALLATION & ELEMENTS

STATE OF WISCONSIN
DEPARTMENT OF TRANSPORTATION

APPROVED

5/23/11 — DATE

/S/ Jerry H. Zogg — ROADWAY STANDARDS ENGINEER

FHWA

6
S.D.D. 14 B 15-7c

BILL OF MATERIALS

NOTE NO.	QTY.	DESCRIPTION
(1)	4	WOOD BREAKAWAY TERMINAL POST: 5½" X 7½" X 3'-9"
(2)	**	STEEL TUBE: OPTION 1 - QUANITY OF 4 TS 8" X 6" X 0.188", 4'-6" LONG OR OPTION 2 - QUANITY OF 2 TS 8" X 6" X 0.188", 6'-0" AND 2 TS 8" X 6" X 0.188", 4'-6" LONG
(3)	2	SOIL PLATE: 2'-0" X 1'-6" X ¼" **
(4)	4	WOOD BREAKAWAY CRT POST: 6" X 8" X 6'-0"
(5)	6	WOOD OFFSET BLOCKS: 6' X 8" X 1'-2"
(6)	1	PIPE SLEEVE: 2" X 5 ½" STANDARD PIPE
(7)	1	BEARING PLATE
(8)	1	BCT CABLE ASSEMBLY
(9)	1	CABLE ANCHOR BOX
(10)	1	STRUT & YOKE
(11)	1	STEEL PLATE BEAM, END PANEL 12 GA. 13'-6½" LONG FOR SKT-350, ET-2000 AND ET-2000 PLUS
(12)	3	STEEL PLATE BEAM: 12 GA. 13'-6½"
(13)	1	ET-2000/ET-2000 PLUS GUARDRAIL EXTRUDER OR SKT-350 IMPACT HEAD: AS FURNISHED BY MANUFACTURER
(14)	1	REFLECTIVE SHEETING TYPE H: 18" X 18"
(15)	1	E.A.T. MARKER POST

GENERAL NOTES

FOLLOW MANUFACTURE'S BOLTING RECOMMENDATIONS. IF NONE ARE AVAILABLE, INSTALL ⅝" ϕ X 1'-6" BUTTON HEAD BOLTS AT ALL POSTS EXCEPT FOR POST 1.

(A) THE SLOPE IN THE AREA BOUNDED BY THE EXTENDED VEHICLE RUNOUT PATH (EVRP), THE HINGE POINT LINE (HPL),AND THE CLEAR ZONE LIMITS (CZL) SHALL BE 4:1 OR FLATTER.

(B) AFTER FINAL ASSEMBLY, RECHECK CABLE TO BE SURE IT IS TAUT AND HAS NOT RELAXED.

(C) THE 13 SLOT FIRST RAIL PANEL MAY BE USED IN LIEU OF THE 3 SLOT RAIL PANEL ON SKT-350 ONLY.

(D) THE TOP OF THE STEEL TUBE ON POSTS 1 THROUGH 4 SHALL NOT BE MORE THAN 3" ABOVE THE FINISH GROUND ELEVATION.

(E) THE CENTER OF THE UPPER 3½" DIAMETER HOLE ON POST 5 THROUGH 8 SHALL BE ¾" ABOVE THE FINISHED GROUND LINE.

(F) SHEETING IS ATTACHED TO 0.040 ALUMINUM SHEET AND ATTACHED TO E.A.T. HEAD USING 4 STAINLESS STEEL SELF-TAPPING SCREWS. ONE SCREW PER CORNER OF E.A.T.

STEEL POSTS SHALL NOT BE ALLOWED FOR USE WITH ENERGY ABSORBING TERMINALS.

DO NOT INSTALL REFLECTORS ON THE FIRST 50 FEET OF THE APPROACH END OF THE ENERGY ABSORBING TERMINAL.

* DO NOT ATTACH BLOCKOUTS TO POSTS 1 AND 2.

** SDD SHOWS 4 - 54 INCH STEEL TUBES WITH SOIL PLATES INSTALLED ON POST 1 AND POST 2. POST 3 AND 4 DO NOT NEED SOIL PLATES. AN ALTERNATIVE INSTALLATION WOULD CONSIST OF 2 - 72 INCH STEEL TUBES ON POST 1 AND POST 2 AND 54 INCH SOIL TUBES ON POSTS 3 AND 4. THE ALTERNATIVE INSTALLATION DOES NOT REQUIRE SOIL PLATES.

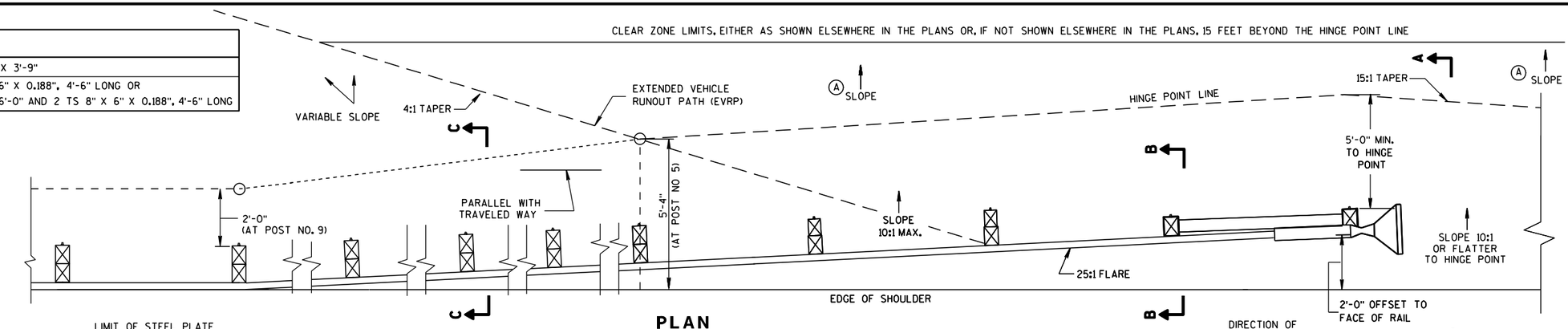

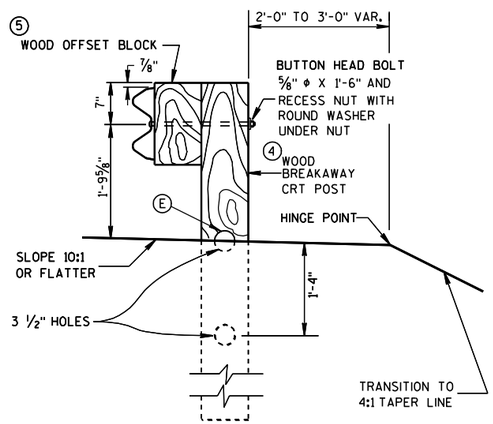

SECTION C-C

TYPICAL AT POST NOS. 6, 8

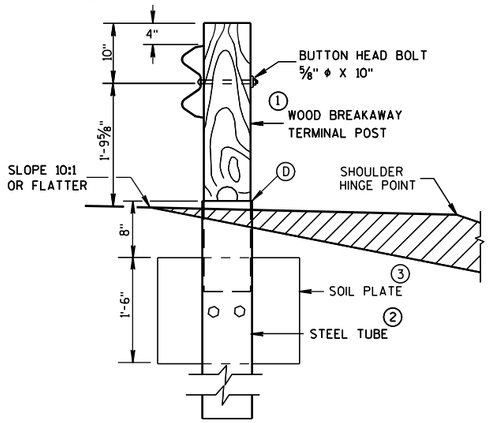

SECTION B-B

TYPICAL AT POST NO. 2*

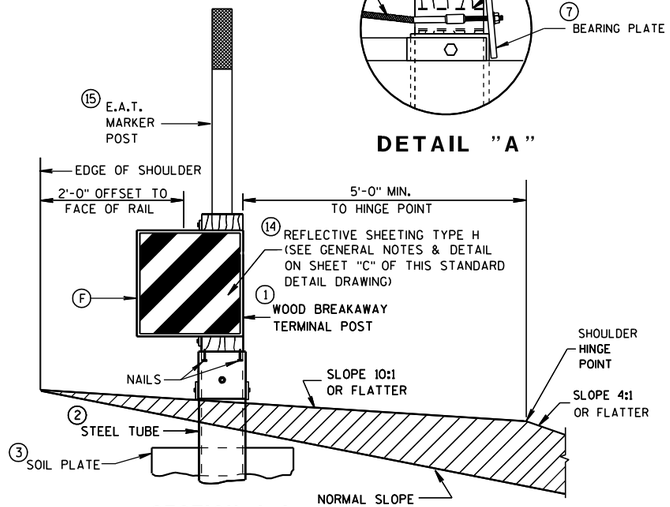

DETAIL "A"

SECTION A-A

TYPICAL AT POST NO. 1*

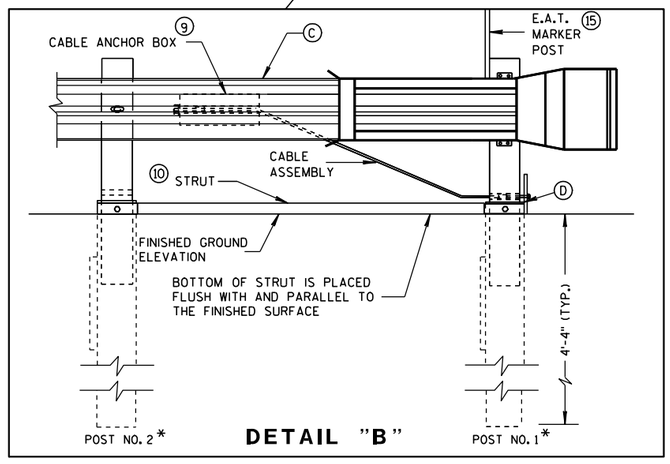

DETAIL "B"

STEEL PLATE BEAM GUARD ENERGY ABSORBING TERMINAL

STATE OF WISCONSIN
DEPARTMENT OF TRANSPORTATION

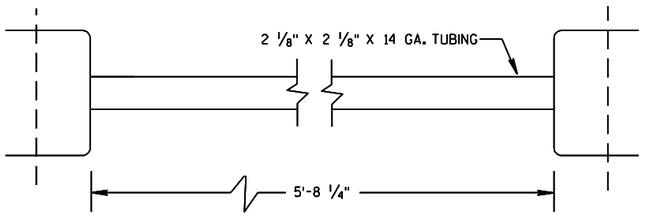

⑩ STRUT DETAIL (SKT-350)

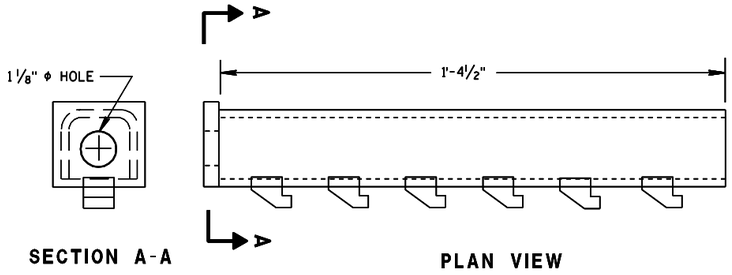

⑨ CABLE ANCHOR BOX (ET-2000/ET-2000 PLUS)

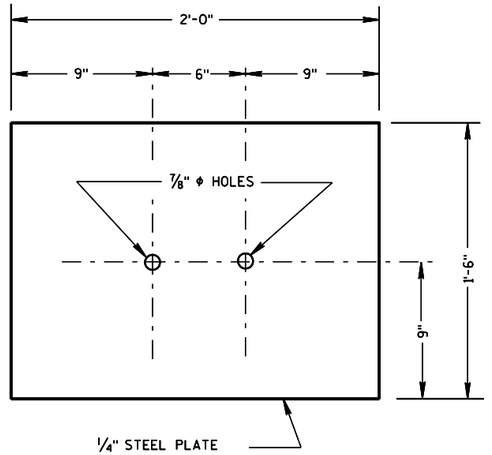

③ SOIL PLATE

(SKT-350, ET-2000/ET-2000 PLUS)

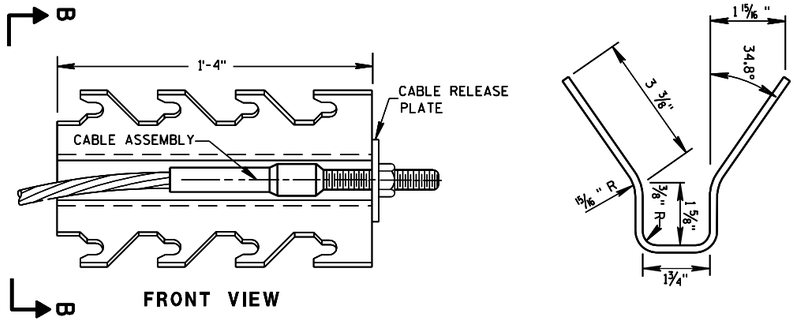

⑨ CABLE ANCHOR BOX (SKT-350)

(SKT-350)

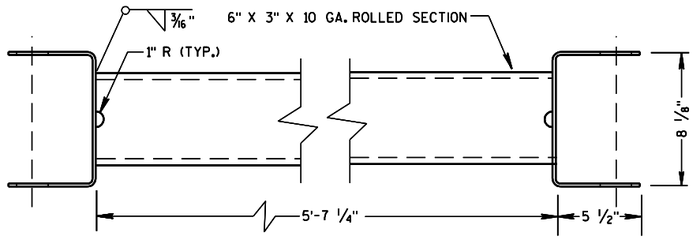

⑩ STRUT DETAIL (ET-2000/ET-2000 PLUS)

(ET-2000/ET-2000 PLUS)

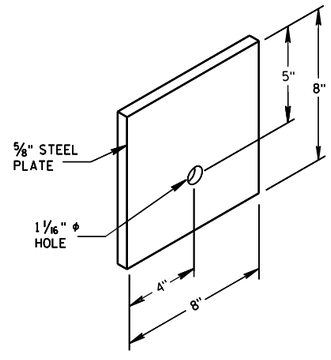

⑦ STEEL BEARING PLATE

(SKT-350, ET-2000/ET-2000 PLUS)

6

6

S.D.D. 14 B 24-7b

S.D.D. 14 B 24-7b

STEEL PLATE BEAM GUARD
ENERGY ABSORBING TERMINAL

STATE OF WISCONSIN
DEPARTMENT OF TRANSPORTATION

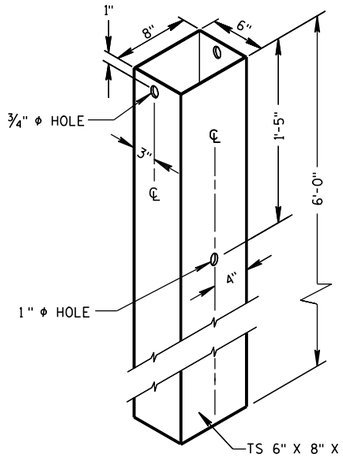

② 72" STEEL TUBE
(POSTS NO. 1-4

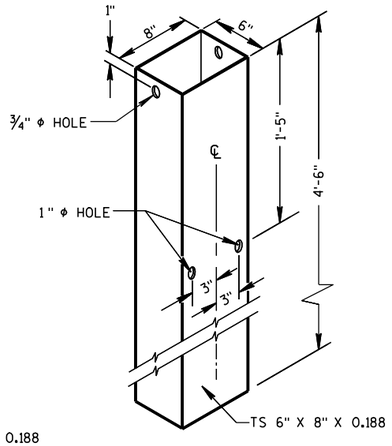

② 54" STEEL TUBE
(POSTS NO. 1-4

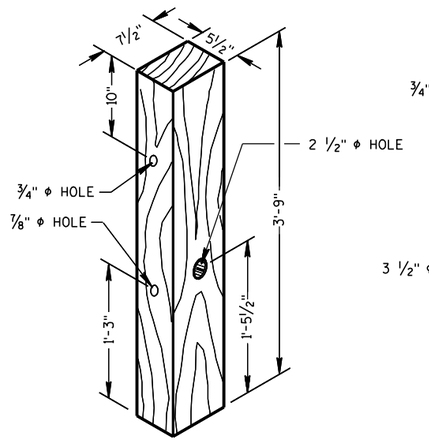

① TERMINAL POST
(POSTS NO. 1-4

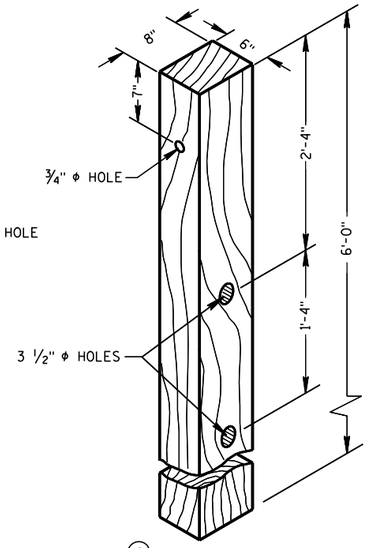

④ CRT POST
(POSTS NO'S 5-8

WOOD BREAKAWAY POSTS

GENERAL NOTES

STEEL PLATE BEAM GUARD, ENERGY ABSORBING TERMINAL SHALL BE PAID FOR AT THE CONTRACT UNIT PRICE EACH, WHICH SHALL INCLUDE HARDWARE, STEEL PLATE BEAM GUARD, POSTS, REFLECTIVE SHEETING AND INSTALLATION AS SHOWN.

WHEN ROCK IS ENCOUNTERED DURING EXCAVATION, A 12 INCH DIA. POST HOLE EXTENDING 20 INCHES DEEP INTO THE ROCK MAY BE USED IF APPROVED BY THE ENGINEER. GRANULAR MATERIAL SHALL BE PLACED IN THE BOTTOM OF THE HOLE APPROXIMATELY 2 ½" INCHES DEEP TO PROVIDE DRAINAGE. THE SOIL TUBES SHALL BE FIELD CUT TO LENGTH, PLACED IN THE HOLE AND BACKFILLED WITH ADEQUATELY COMPACTED MATERIAL EXCAVATED FROM THE HOLE.

SEE APPROVED PRODUCTS LIST FOR ACCEPTABLE E. A. T. MARKER POST.

(G) ½" DIA. X 3" LAG BOLT WITH WASHER.

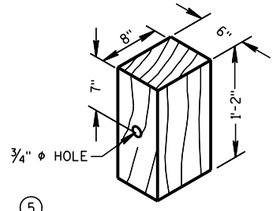

⑤ WOOD OFFSET BLOCK
REQ'D. AT ALL POSTS EXCEPT POST NO'S 1 & 2

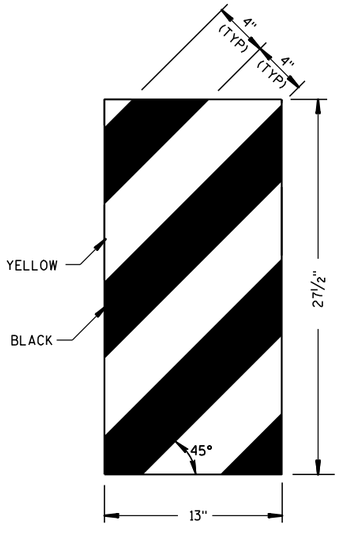

ET-2000 PLUS ONLY

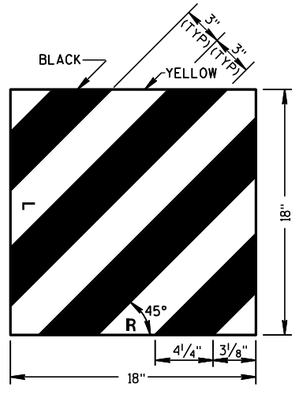

ET-2000 AND SKT-350

⑭ REFLECTIVE SHEETING DETAILS

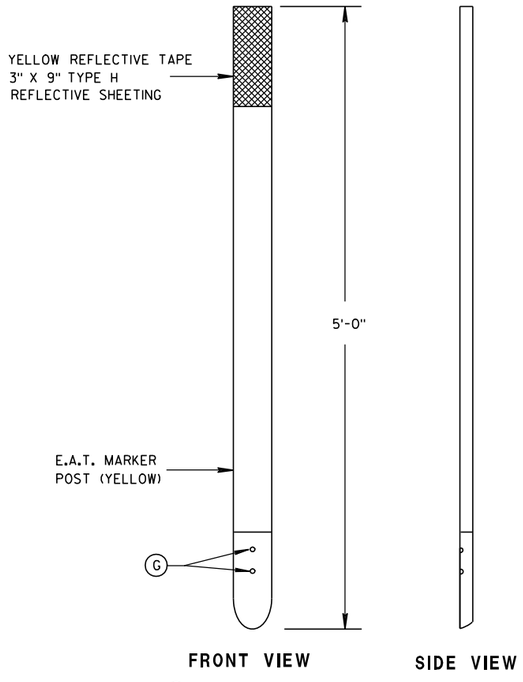

FRONT VIEW SIDE VIEW

⑮ E.A.T. MARKER POST

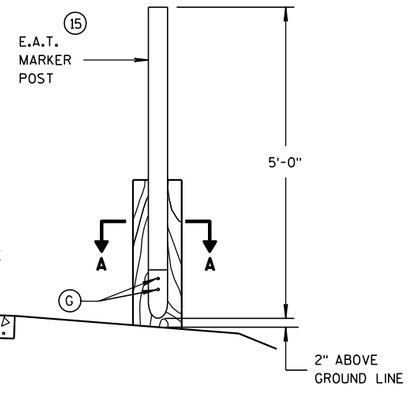

TYPICAL INSTALLATION OF E.A.T.
MARKER POST BACKSIDE OF POST NO. 1
(E.A.T. AND RAIL REMOVED FOR CLARITY)

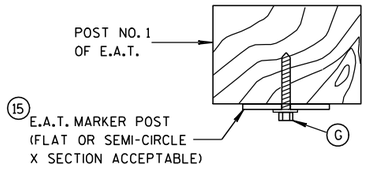

SECTION A-A

STEEL PLATE BEAM GUARD
ENERGY ABSORBING TERMINAL

STATE OF WISCONSIN
DEPARTMENT OF TRANSPORTATION

APPROVED
4-12-10 DATE
/S/ Jerry H. [illegible]
ROADWAY STANDARDS ENGINEER
[illegible]ENT
FHWA

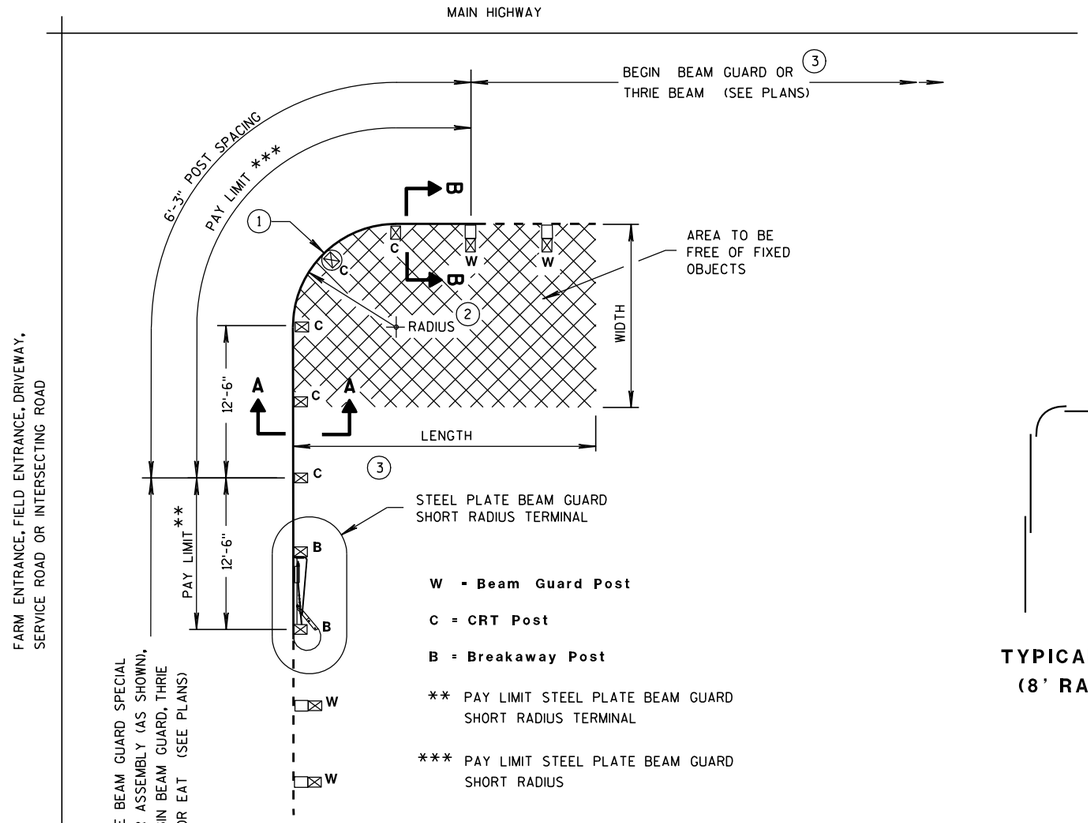

TYPICAL LAYOUT
(8' RADIUS SHOWN)

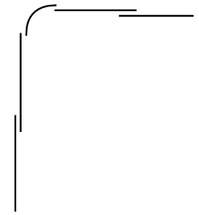

TYPICAL LAP SPLICES
(8' RADIUS SHOWN)

GENERAL NOTES

ALL ANGLES, CHANNELS, AND PLATES SHALL CONFORM TO THE REQUIREMENTS OF ASTM A36 AND THE STRUCTURAL TUBING SHALL CONFORM TO ASTM A 500. WELDING SHALL MEET THE CURRENT REQUIREMENTS OF THE AMERICAN WELDING SOCIETY STRUCTURAL WELDING CODE ANSI/AWS D1.1. ALL STRUCTURAL STEEL SHALL BE GALVANIZED IN ACCORDANCE WITH ASTM A 123. PUNCHING, DRILLING, CUTTING, OR WELDING WILL NOT BE PERMITTED AFTER GALVANIZING. FURNISH AND INSTALL HARDWARE PER STANDARD SPECIFICATION 614.2. UNLESS NOTED OTHERWISE.

SHOP BEND CURVED RAIL SECTIONS.

SEE STANDARD DETAIL DRAWING 14 B 15 FOR OTHER DETAIL.

(1) ON THE 8 FOOT RADIUS INSTALLATION, DO NOT INSTALL BUTTON HEAD BOLT AT CENTER CRT POST.

(2) RADIUS FROM 8' - 36'. SEE PLAN.

(3) HEIGHT TRANSITION MAY BE REQUIRED. SEE PLAN OR PROJECT ENGINEER.

(4) 5/8" ø X 1'-6" BUTTON HEAD BOLT AND RECESS NUT WITH ROUND WASHER UNDER NUT.

RADIUS	NUMBER OF CRT POSTS	*NUMBER AND LENGTH OF CURVED RAILS	REQUIRED AREA FREE OF FIXED OBJECTS (LENGTH x WIDTH)
8'	5	1 at 12.5'	25' x 15'
16'	7	1 at 25'	30' x 15'
24'	9	1 at 25' and 1 at 12.5'	40' x 20'
32'	11	2 at 25'	50' x 20'

* THE NUMBER OF RAILS IS BASED ON A 90° INTERSECTION. SEE PLAN FOR NON 90° INSTALLATIONS.

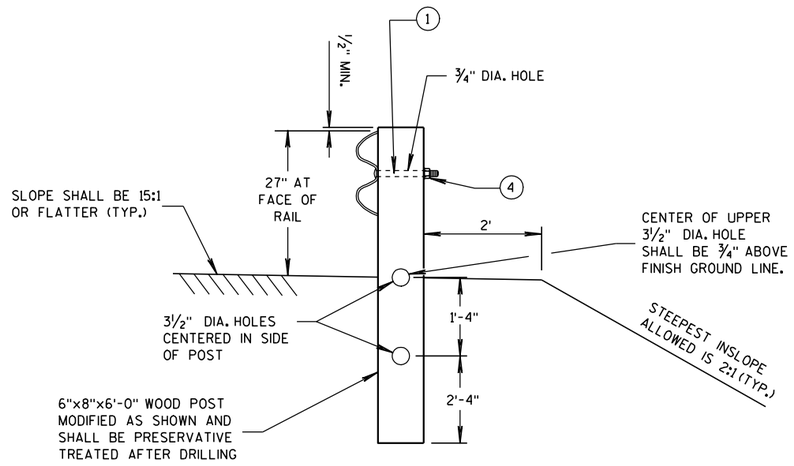

SECTION A-A
(CRT POST)

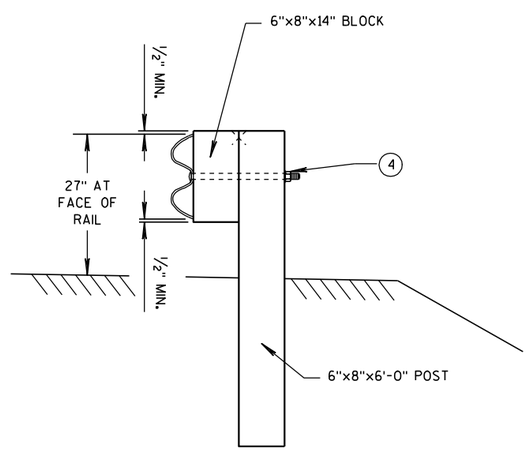

SECTION B-B
(BEAM GUARD POST)

STEEL PLATE BEAM GUARD SHORT RADIUS TERMINAL

STEEL PLATE BEAM GUARD SHORT RADIUS TERMINAL

STATE OF WISCONSIN
DEPARTMENT OF TRANSPO...

6

S.D.D. 14 B 27-1a

6

S.D.D. 14 B 27-1a

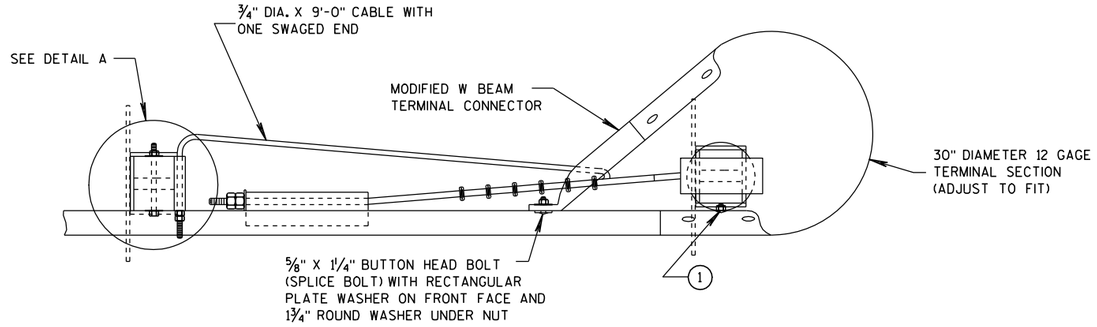

PLAN VIEW

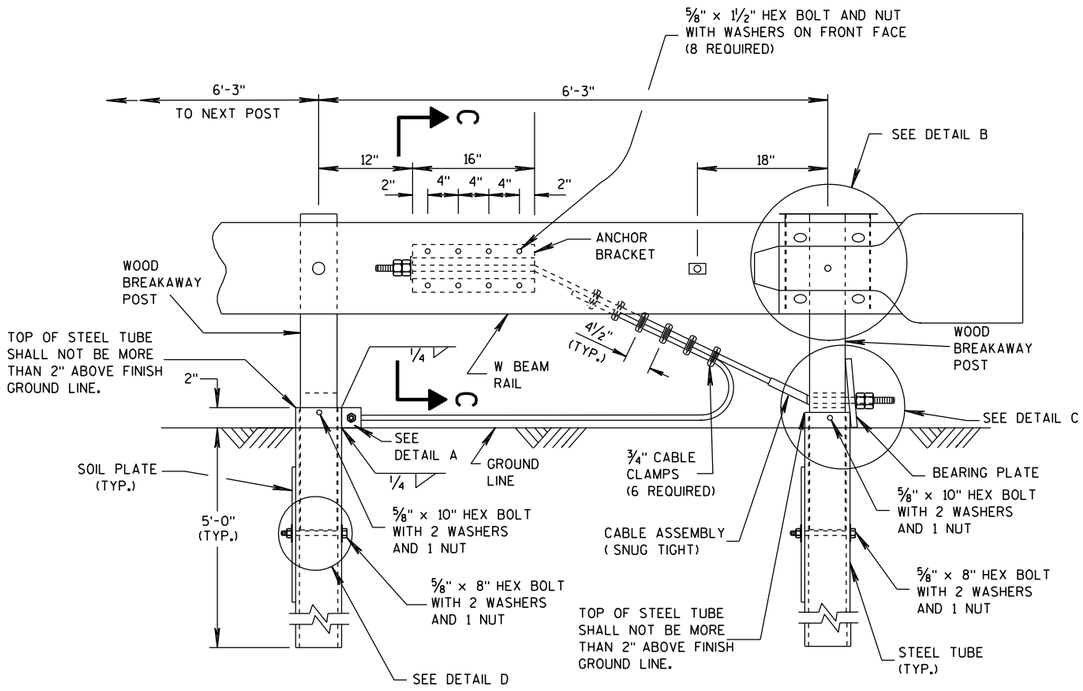

ELEVATION VIEW

STEEL PLATE BEAM GUARD SHORT RADIUS TERMINAL

GENERAL NOTES

(1) ATTACH W BEAM RAIL TO THE STEEL PIPE WITH A ⅝" X 2" BUTTON HEAD BOLT WITH NO WASHER. CONNECTION TO THE POST IS NOT REQUIRED.

INSTALL GALVANIZED ¾" (6X19) PREFORMED WIRE OR INDEPENDENT WIRE ROPE CORE CONFORMING TO AASHTO M 30. MANUFACTURE WIRE ROPE OUT OF IMPROVED PLOW STEEL WITH A MINIMUM BREAKING STRENGTH OF 42,800 PSI.

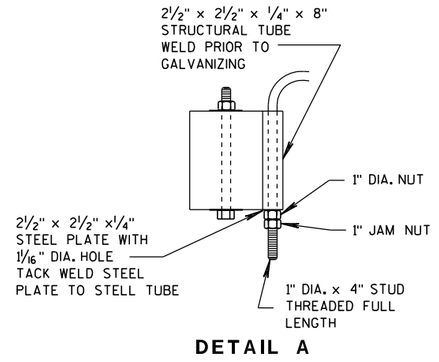

DETAIL A

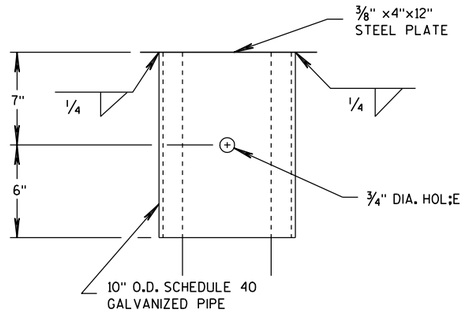

DETAIL B

(BEAM GUARD AND TERMINAL SECTION NOT SHOWN)

STEEL PLATE BEAM GUARD SHORT RADIUS TERMINAL

STATE OF WISCONSIN
DEPARTMENT OF TRANSPORTATION

6

S.D.D. 14 B 27-1b

6

S.D.D. 14 B 27-1b

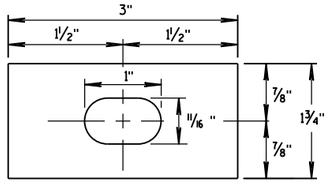

RECTANGULAR PLATE WASHER

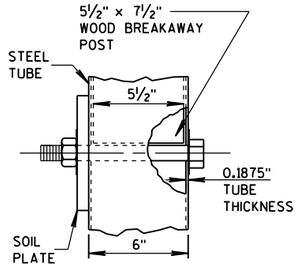

DETAIL D

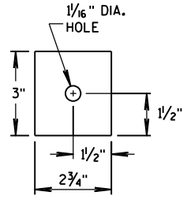

END PLATE

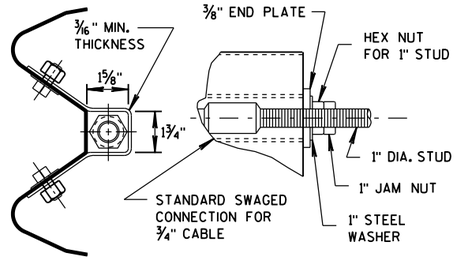

SECTION C-C
(END PLATE REMOVED)

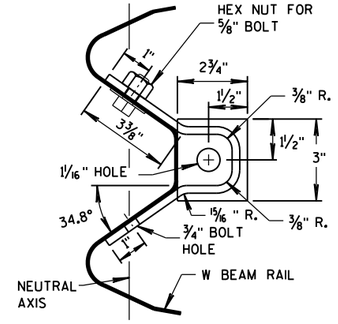

ANCHOR BRACKET

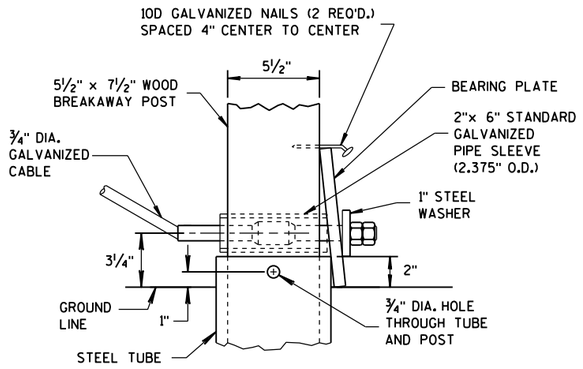

DETAIL C

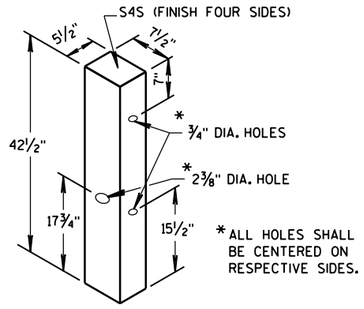

WOOD BREAKAWAY POST

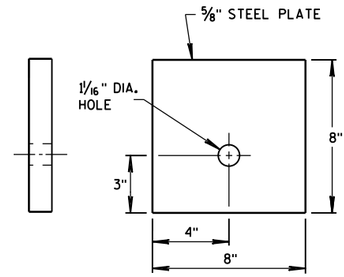

BEARING PLATE

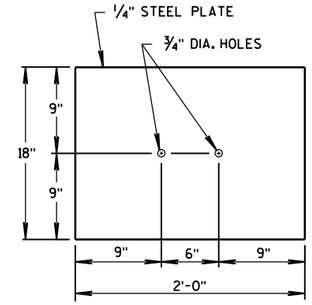

SOIL PLATE

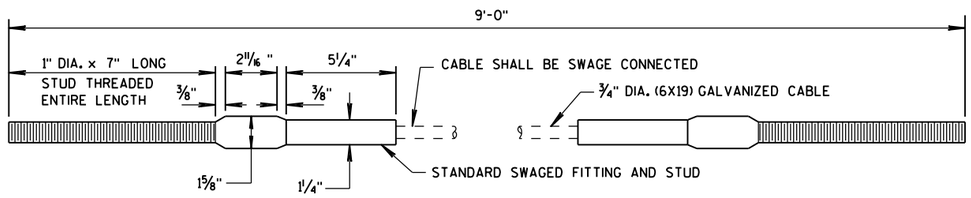

CABLE ASSEMBLY

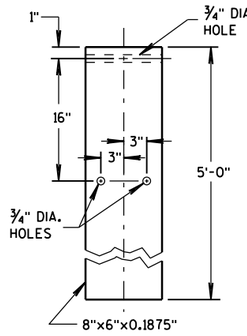

STEEL TUBE

STEEL PLATE BEAM GUARD
SHORT RADIUS TERMINAL

STATE OF WISCONSIN
DEPARTMENT OF TRANSPORTATION

APPROVED
12/18/08 — DATE
/S/ Jerry H. Zogg — ROADWAY STANDARDS DEVELOPMENT ENGINEER
FHWA

6
S.D.D. 14 B 27-1c

GENERAL NOTES

1. WOOD OR STEEL POSTS (w6X9 OR w6X8.5) MAY BE USED. DO NOT INTERMIX WOOD AND STEEL POSTS. INSTALL STEEL POSTS WITH HOLES ON APPROACHING TRAFFIC SIDE.

2. USE WOOD OR APPROVED PLASTIC BLOCKOUTS. WOOD BLOCKOUTS MAY BE CONSTRUCTED OUT OF TWO OR MORE WOOD BLOCKOUTS. SEE ALTERNATE WOOD BLOCKOUT DETAIL. DIMENSIONS OF APPROVED PLASTIC BLOCKOUTS MAY VARY.

3. IF ROCK IS ENCOUNTERED DURING EXCAVATION, PROVIDE A HOLE 12 INCHES IN DIAMETER EXTENDING 20 INCHES DEEP INTO THE ROCK. PLACE APPROXIMATELY 2½INCHES OF GRANULAR MATERIAL IN THE BOTTOM OF THE HOLE. CUT THE POSTS THE TO LENGTH AMD INSTALL. BACKFILL WITH EXCAVATED MATERIAL AND COMPACT. BACKFILL IS TO BE FREE OF LARGE ROCKS.

4. WHEN THE DISTANCE FROM BACK OF POST TO SHOULDER HINGE POINT IS LESS THAN 2 FEET INSTALL LONGER POST AT HALF POST SPACING (K).

5. FOR NEW MGS INSTALLATION TOP OF W-BEAM RAIL TOLERANCE IS ± 1". FOR EXISTING MGS INSTALLATION TOP OF W-BEAM IS BETWEEN 27¾" TO 32".

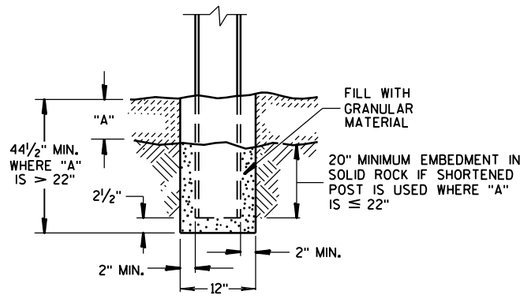

END VIEW
SETTING STEEL OR WOOD POST IN ROCK ③

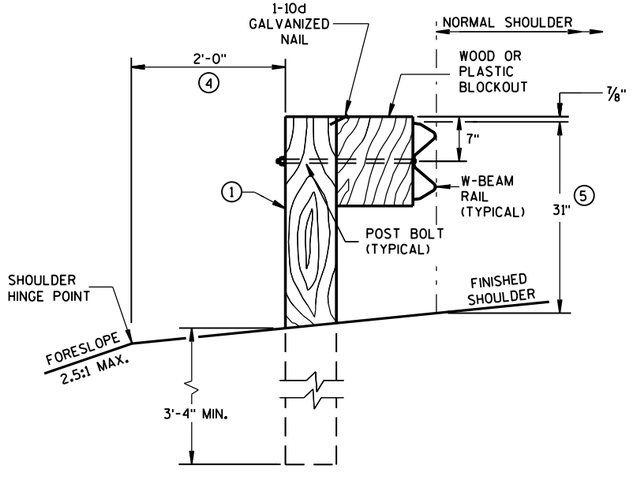

END VIEW

LOCATED ALONG A ROADWAY SHOULDER
STANDARD INSTALLATION

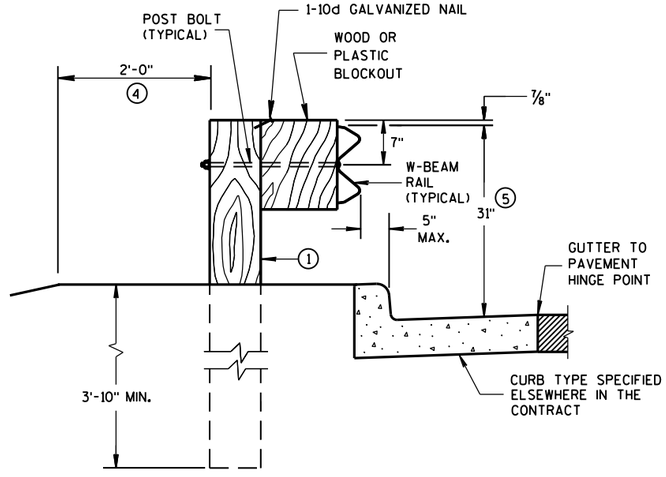

END VIEW

LOCATED ALONG A CURBED ROADWAY

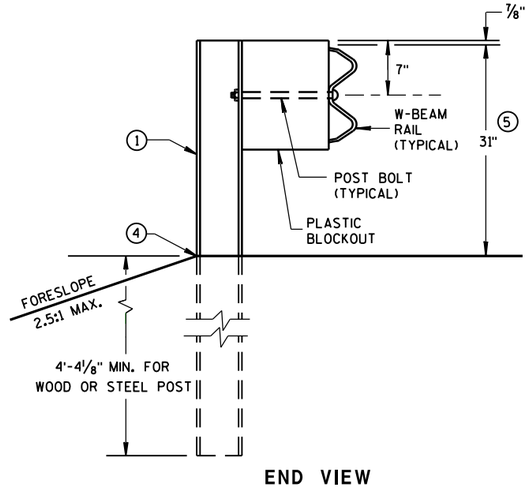

END VIEW

MGS LONGER POST AT HALFPOST SPACING W BEAM (K)

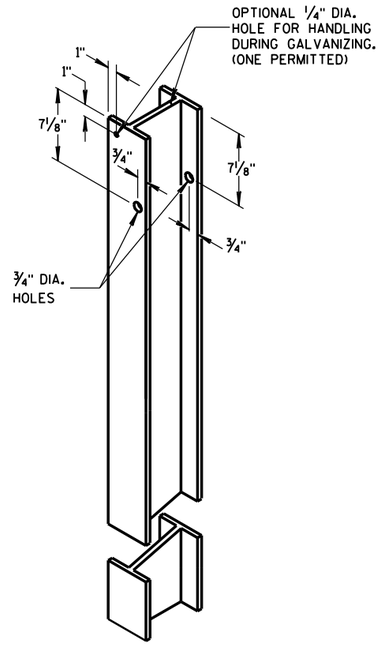

STEEL POST &
HOLE PUNCHING DETAIL
(w6X9) ①

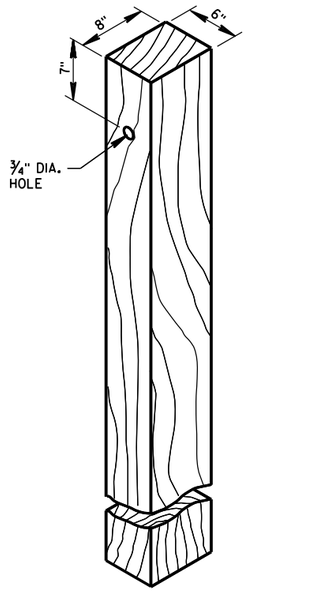

WOOD POST
(6" X 8") NOMINAL ①

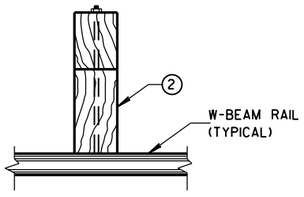

PLAN VIEW
WOOD POST,
BLOCKOUT & BEAM

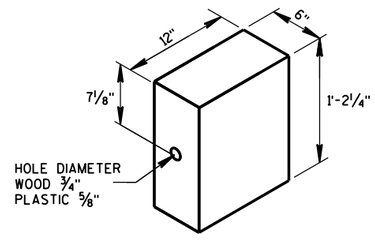

WOOD OR
PLASTIC BLOCKOUT ②

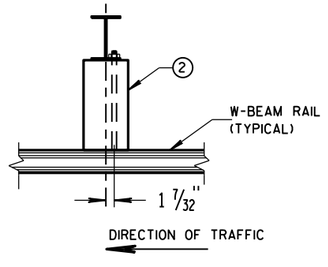

PLAN VIEW
STEEL POST,
PLASTIC BLOCKOUT & BEAM

MIDWEST GUARDRAIL SYSTEM
(MGS) GUARDRAIL

STATE OF WISCONSIN
DEPARTMENT OF TRANSPOR

6
S.D.D. 14 B 42-2a

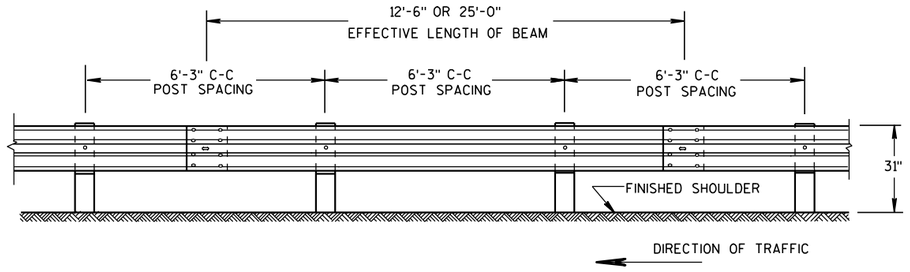

FRONT VIEW

POST SPACING STANDARD INSTALLATION

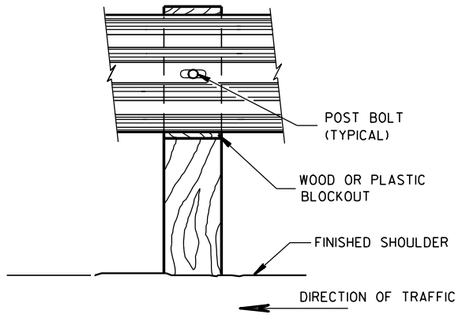

FRONT VIEW AT WOOD POST

GENERAL NOTES

1. PROVIDE TYPE "H" SILVER REFLECTIVE SHEETING ON ALL REFLECTORS EXCEPT THOSE LOCATED ALONG THE LEFT EDGE OF ONE-WAY ROADWAYS, WHICH SHALL BE PROVIDED WITH TYPE "H" YELLOW REFLECTIVE SHEETING.
2. DO NOT INSTALL REFLECTORS ON THE FIRST 50 FEET OF THE APPROACH END OF THE ENERGY ABSORBING TERMINAL. RAIL SPLICE LOCATIONS ARE THE ONLY ACCEPTABLE LOCATIONS FOR REFLECTORS.
3. REVERSE EVERY OTHER REFLECTOR FOR 2-WAY VISIBILITY. THE CONTRACTOR MAY FURNISH TWO-SIDED REFLECTORS IN LIEU OF ONE-SIDED REFLECTORS.
4. PROVIDE AN ANGLE OF BEND OF 90° ± 1° FOR TWO-SIDED REFLECTORS.
5. 25 FEET OF HALF POST SPACING IS REQUIRED ON APPROACH AND DEPARTURE ENDS OF QUARTER POST SPACING.

POST BOLTS ARE A 5/8" DIAMETER ASTM A307 GUARDRAIL BOLT. A POST BOLT REQUIRES 5/8" DIAMETER A563A DOUBLE RECESSED (DR) HEAVY HEX NUT AND 5/8" DIAMETER F844 FLAT WASHER. POST BOLTS MAY BE LONGER IF MULTIPLE BLOCKOUTS ARE BEING USED.

GUARD RAIL SPLICE BOLTS ARE A 5/8" DIAMETER ASTM A307 GUARDRAIL HEAD BOLT. A GUARDRAIL SPLICE BOLT REQUIRES 5/8" DIAMETER A563A DOUBLE RECESSED (DR) HEAVY HEX NUT.

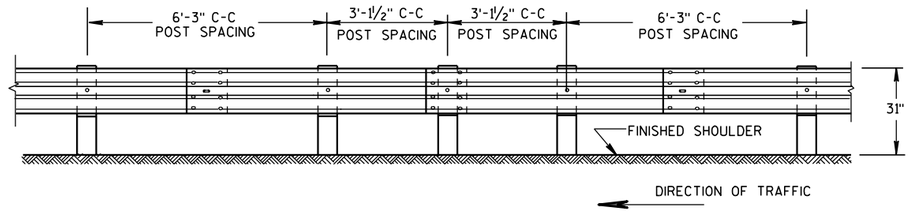

FRONT VIEW

HALF POST SPACING (HS) AND HALF POST SPACING WITH LONGER POSTS (K)

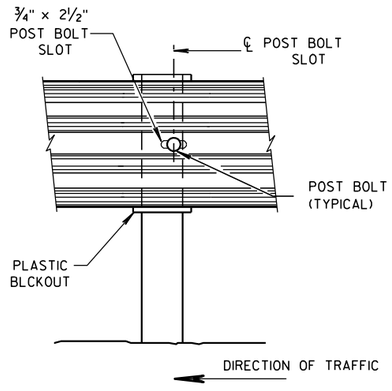

FRONT VIEW AT STEEL POST

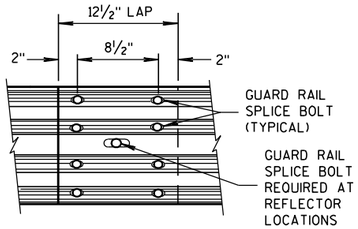

FRONT VIEW

MID-SPAN BEAM SPLICE

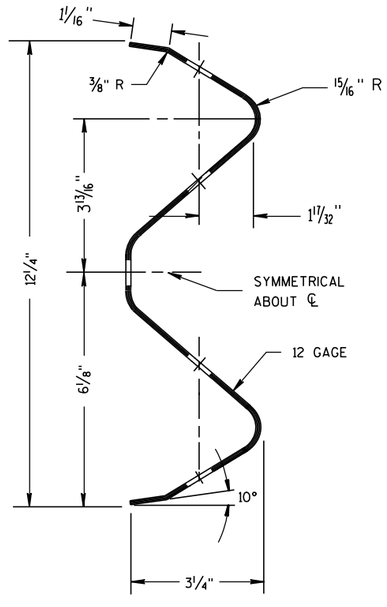

SECTION THRU W-BEAM RAIL

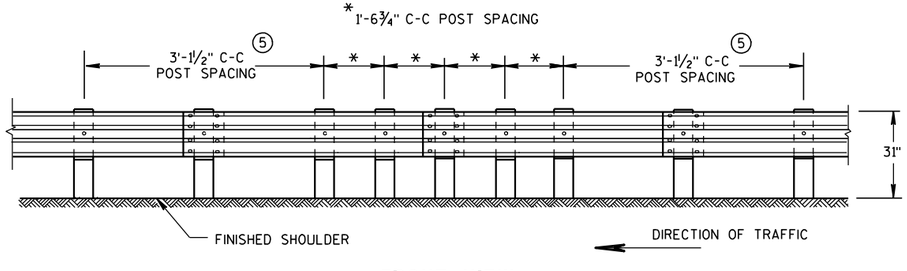

FRONT VIEW

QUARTER POST SPACING (QS)

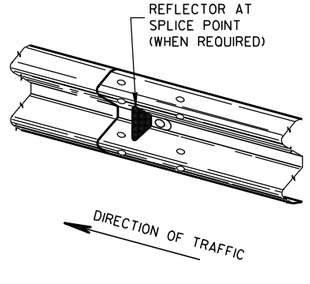

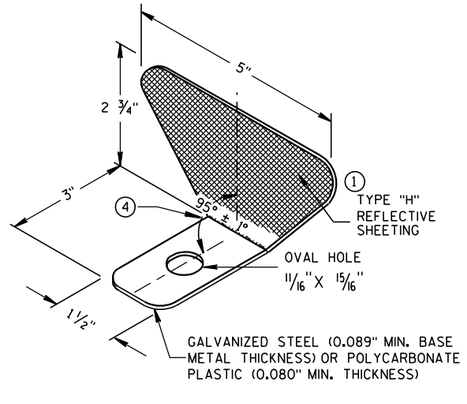

ONE SIDED REFLECTOR DETAIL AND TYPICAL INSTALLATION ①

REFLECTOR SPACING ②

	BEAM GUARD LENGTH	REFLECTOR SPACING	NO. SURFACES REFLECTORIZED	MIN. NO. REFLECTORS
ONE WAY TRAFFIC	< 200' > 200'	50' C-C 100' C-C	1 1	3
TWO WAY TRAFFIC	< 200' > 200'	25' C-C 50' C-C	1 ③ 1	6
TWO WAY TRAFFIC	< 200' > 200'	50' C-C 100' C-C	2 ④ 2	3

MIDWEST GUARDRAIL SYSTEM
(MGS) GUARDRAIL

STATE OF WISCONSIN
DEPARTMENT OF TRANSPORTATION

6
S.D.D. 14 B 42-2b

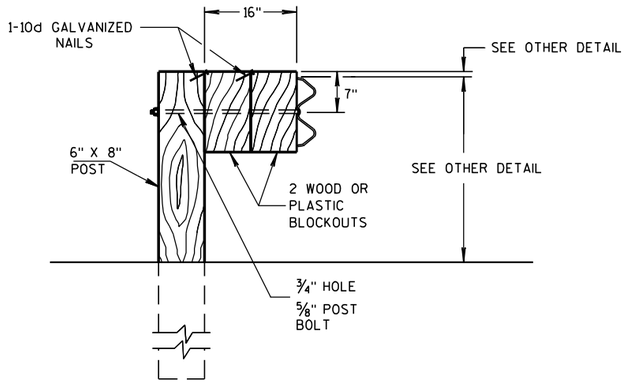

DETAIL FOR 16" BLOCKOUT DEPTH

IT IS ACCEPTABLE TO USE BLOCKOUTS UP TO 16" DEEP TO INCREASE THE POST OFFSET TO AVOID UNDERGROUND OBSTACLES. THERE IS NO LIMIT TO THE NUMBER OF POSTS THAT CAN HAVE ADDITIONAL BLOCKOUTS UP TO 16" DEEP.

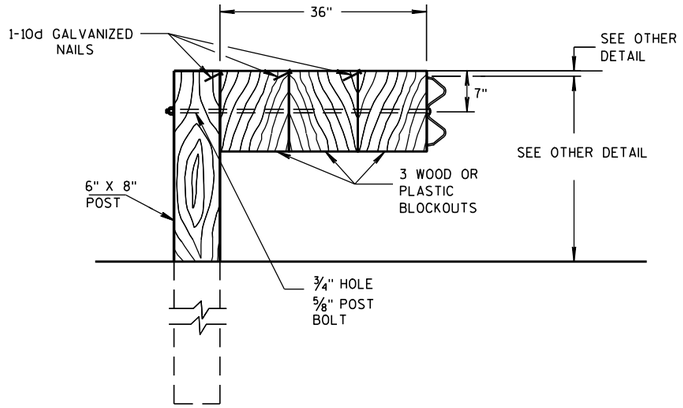

DETAIL FOR 36" BLOCKOUT DEPTH

NOTES: UNDER SPECIAL CIRCUMSTANCES, SUCH AS AVOIDING OBSTACLES THAT ARE NOT RELOCATED, IT IS ACCEPTABLE TO INSTALL ADDITIONAL BLOCKOUTS TO OBTAIN UP TO 36" DEPTH FOR ONE OR TWO POSTS IN A SECTION OF GUARDRAIL.

DO NOT USE 16" OR 36" BLOCKOUTS IF IT CAUSES THE POST TO BE DRIVEN BEYOND SHOULDER HINGE POINT OR CAUSES A FIXED OBJECT TO BE WITHIN THE DEFLECTION DISTANCE OF THE BARRIER.

NOTE: 1. ALL FILLETS SHALL HAVE A MINIMUM RADIUS OF 1/16".
2. IF THE BOLT EXTENDS MORE THAN 1/4" FROM THE NUT THE BOLT SHOULD BE TRIMMED BACK.

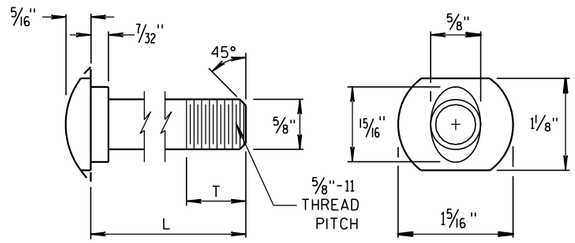

POST BOLT TABLE

L	T (MIN.)
1 1/4"	1 1/8"
2"	1 3/4"
10"	4"
14"	4 1/16"
18"	4"
21"	4 1/16"
25"	4"

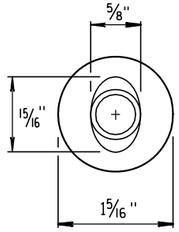

ALTERNATE BOLT HEAD

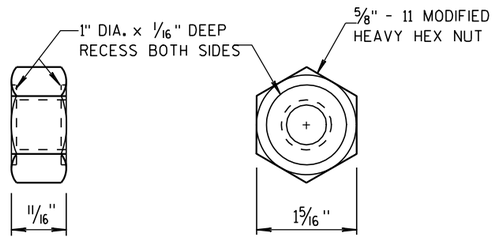

POST BOLT AND RECESS NUT

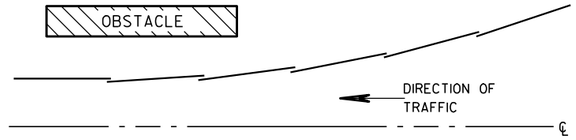

PLAN VIEW

BEAM LAPPING DETAIL

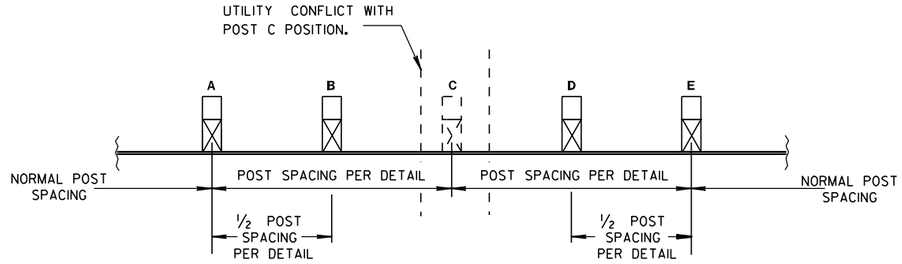

POST DRIVING FOR CONTINUOUS UNDERGROUND OBSTRUCTION

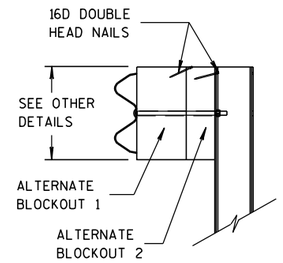

SIDE VIEW

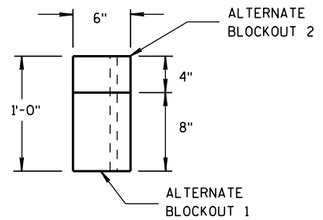

TOP VIEW

ALTERNATE WOOD BLOCKOUT DETAIL

MIDWEST GUARDRAIL SYSTEM (MGS) GUARDRAIL	
STATE OF WISCONSIN DEPARTMENT OF TRANSPORTATION	
APPROVED	
11/15/2011 DATE	/S/ Jerry H. [illegible] ROADWAY STANDARDS ENGINEER
FHWA	85 ENT

GENERAL NOTES

(A) THE SLOPE IN THE AREA BOUNDED BY THE EXTENDED VEHICLE RUNOUT PATH (EVRP), THE HINGE POINT LINE (HPL),AND THE CLEAR ZONE LIMITS (CZL) SHALL BE 4:1 OR FLATTER.

(B) AFTER FINAL ASSEMBLY, RECHECK CABLE TO BE SURE IT IS TAUT AND HAS NOT RELAXED.

(C) DIFFERENT MANUFACTURES REQUIRE DIFFERENT PERFORATED W-BEAM RAIL END PANELS. SEE MANUFACTURES INFORMATION.

(D) THE TOP OF THE STEEL TUBE ON POST 1 AND POST 2 SHALL NOT BE MORE THAN 3" ABOVE THE FINISH GROUND ELEVATION.

(F) SHEETING IS ATTACHED TO 0.040 ALUMINUM SHEET AND ATTACHED TO E.A.T. HEAD USING 4 STAINLESS STEEL SELF-TAPPING SCREWS. ONE SCREW PER CORNER OF E.A.T.

(G) ½" DIAMETER X 3" LONG LAG BOLT AND WASHER.

(H) HARDWARE VARIES BETWEEN DIFFERENT MANUFACTURES. SEE MANUFACTURE'S DRAWING FOR INFORMATION.

(I) DIMENSIONS MAY VARY. SEE MANUFACTURE'S INFORMATION.

SEE SDD 14B42 FOR MORE INFORMATION.

* DO NOT ATTACH BLOCKOUTS TO POSTS 1 AND 2.

DO NOT INSTALL REFLECTORS ON THE FIRST 50 FEET OF THE APPROACH END OF THE ENERGY ABSORBING TERMINAL.

W-BEAM RAIL SPLICES ARE LOCATED AT POST NUMBER 3, AND BETWEEN POST 5 AND 6, BETWEEN POSTS 7 AND 8, AND MIDDLE OF THE SPAN AFTER POST 9.

PATTERN AND COLORS ON REFLECTIVE SHEETING TYPE H ARE TO CONFORM TO OM3-L OR OM3-R OF THE MANUAL ON UNIFORM TRAFFIC CONTROL DEVICES.

THE CENTER OF THE UPPER 3½" DIAMETER HOLE ON POST NUMBER 3 THROUGH POST 9 IS TO BE FLUSH WITH THE GROUND LINE (± ¾")

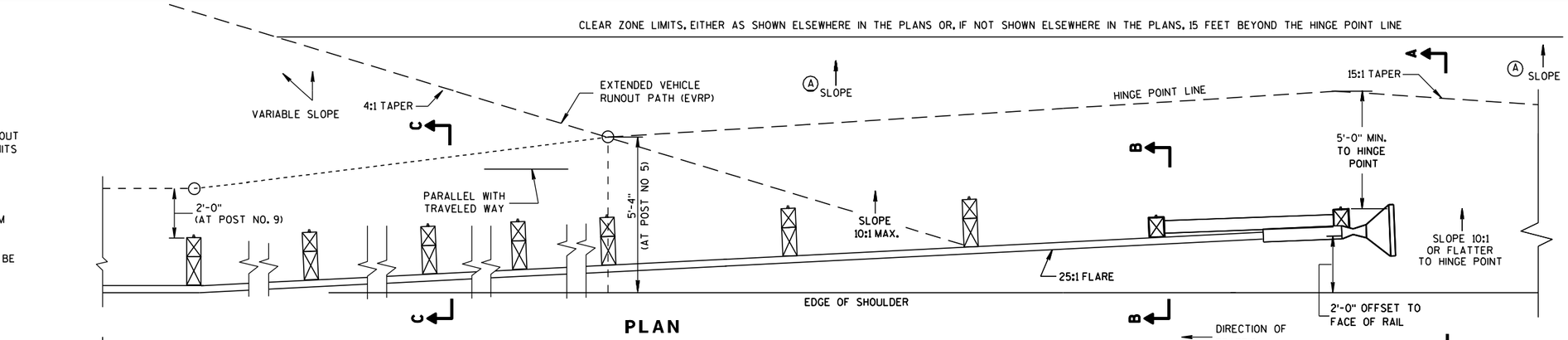

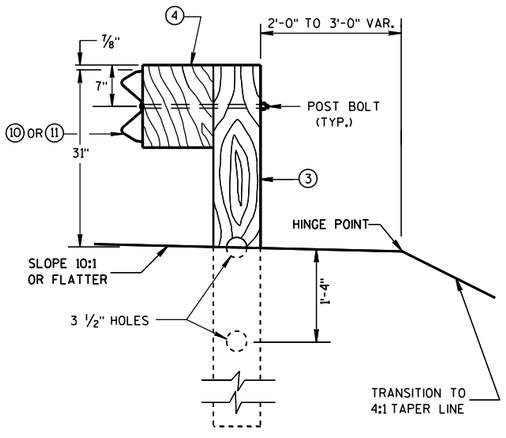

SECTION C-C
TYPICAL AT POST NOS. 3-9

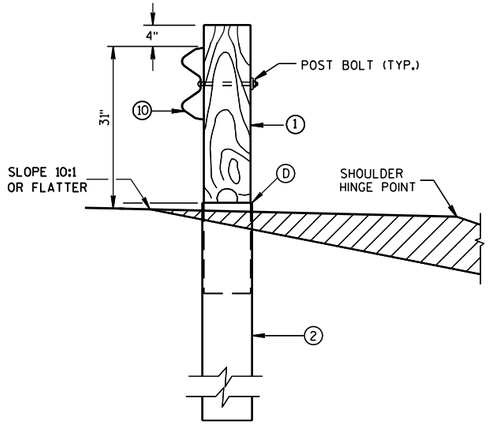

SECTION B-B
TYPICAL AT POST NO. 2*

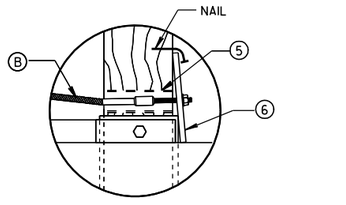

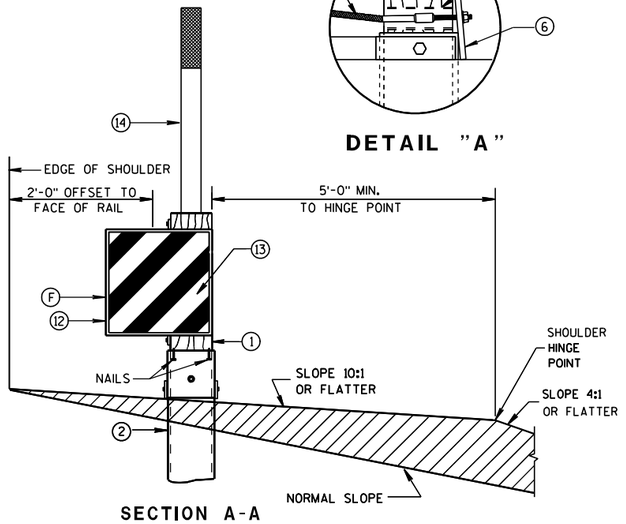

SECTION A-A
TYPICAL AT POST NO. 1*

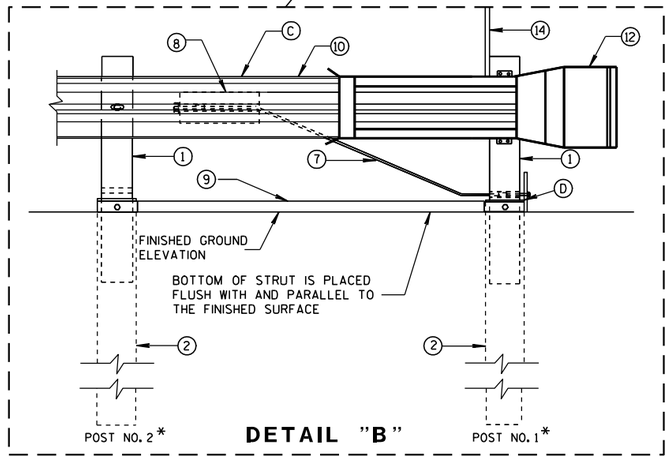

DETAIL "B"

MIDWEST GUARDRAIL SYSTEM
ENERGY ABSORBING TERMINAL (MGS)

STATE OF WISCONSIN
DEPARTMENT OF TRANSPORTATION

6

S.D.D. 14 B 44-1a

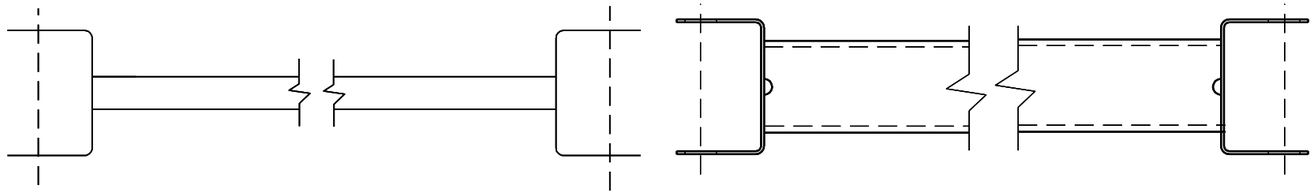

GENERIC GROUND STRUT (9) (H)

BILL OF MATERIALS

PART NO.	DESCRIPTION MATERIALS PROVIDED BY MGS EAT MANUFACTURER. SEE MANUFACTURER'S DETAILS FOR MORE INFORMATION.
(1)	WOOD BREAKAWAY POST
(2)	6" X 8" X 0.188", 6'-0" LONG FOUNDATION TUBE AT POSTS 1 AND 2
(3)	WOOD CRT
(4)	WOOD BLOCKOUT
(5)	PIPE SLEEVE
(6)	BEARING PLATE
(7)	BCT CABLE ASSEMBLY
(8)	ANCHOR CABLE BOX
(9)	GROUND STRUT
(10)	PERFORATED W-BEAM RAIL END PANEL, 12'-6" LONG.
(11)	STANDARD W-BEAM RAIL. MULTIPLE SECTIONS REQUIRED. SECTIONS VARY IN LENGTH.
(12)	END SECTION EAT
(13)	0.040" ALUMINUM SHEET WITH REFLECTIVE SHEETING TYPE H (ONLY THE SHEETING IS SUPPLIED BY THE MANUFACTURER)
(14)	EAT MARKER POST - YELLOW (SEE APPROVED PRODUCTS LIST)

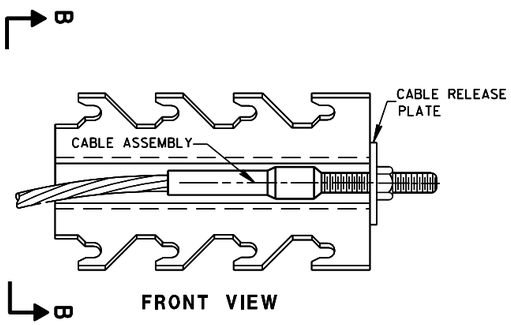

FRONT VIEW

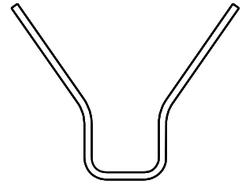

SECTION B-B

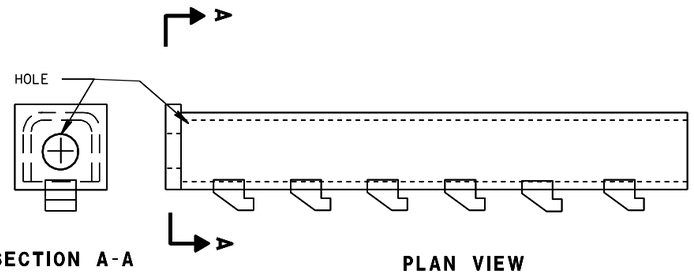

SECTION A-A

PLAN VIEW

GENERIC ANCHOR CABLE BOX (8) (H)

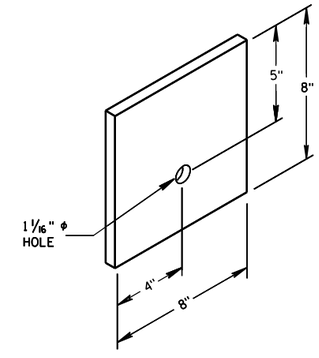

BEARING PLATE (6)

MIDWEST GUARDRAIL SYSTEM
ENERGY ABSORBING TERMINAL
(MGS)

STATE OF WISCONSIN
DEPARTMENT OF TRANSPORTATION

6

S.D.D. 14 B 44-1b

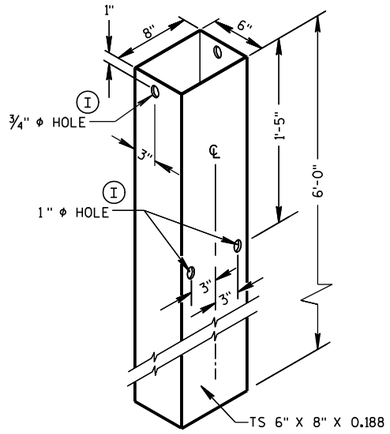

FOUNDATION TUBE (2)

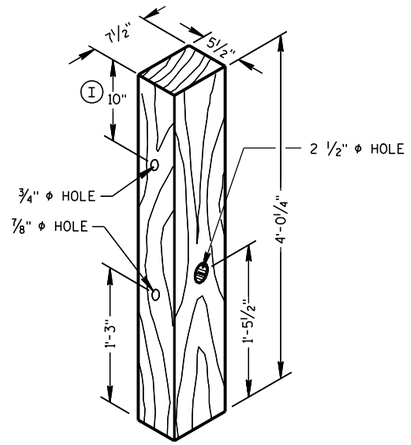

POSTS NUMBER 1 AND 2

WOOD BREAKAWAY POST (1)

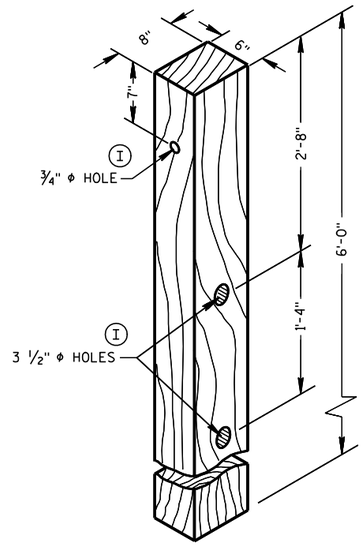

POSTS NUMBER 3-9

WOOD CRT POST (3)

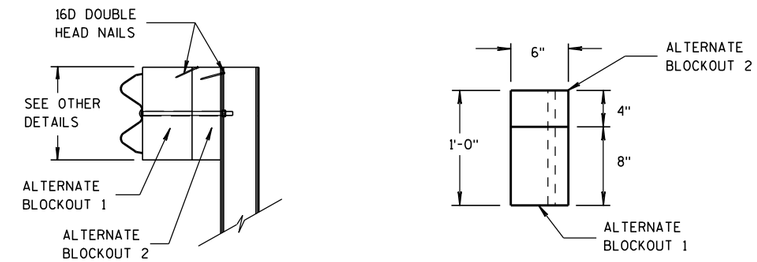

SIDE VIEW

TOP VIEW

ALTERNATE WOOD BLOCKOUT DETAIL

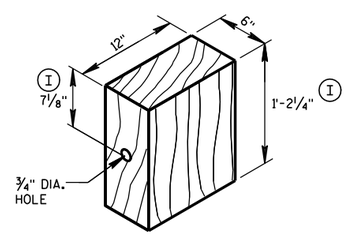

WOOD BLOCKOUT (4)

REQ'D. AT ALL POSTS EXCEPT POST NO'S 1 & 2

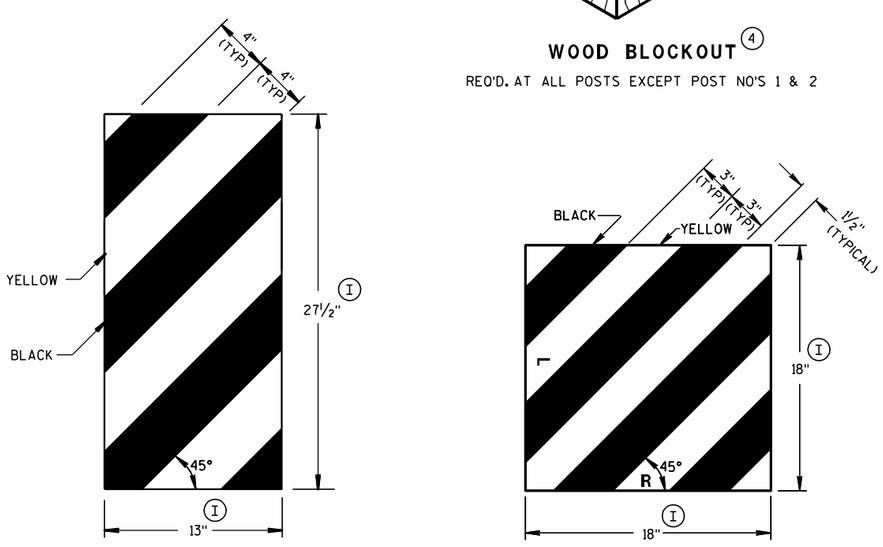

GENERIC REFLECTIVE SHEETING (13) (H)

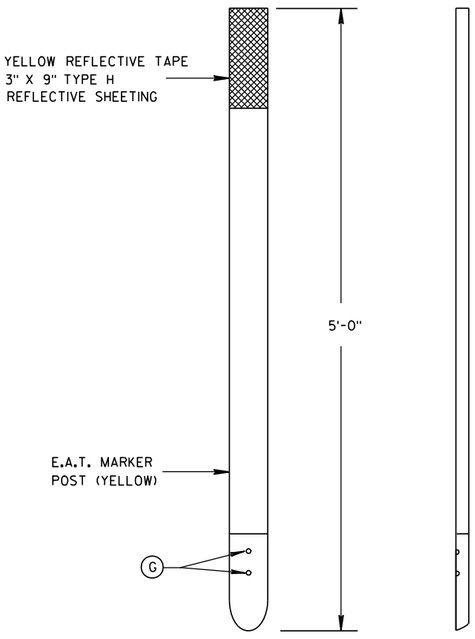

FRONT VIEW

SIDE VIEW

E.A.T. MARKER POST (14)

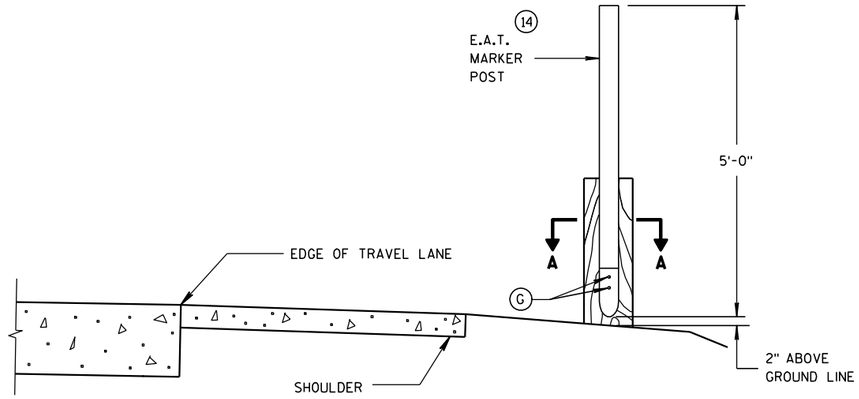

TYPICAL INSTALLATION OF E.A.T. MARKER POST BACKSIDE OF POST NO. 1

(E.A.T. AND RAIL REMOVED FOR CLARITY)

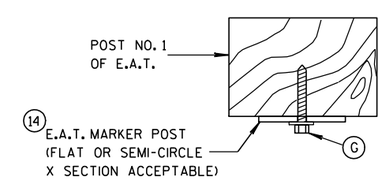

SECTION A-A

MIDWEST GUARDRAIL SYSTEM ENERGY ABSORBING TERMINAL (MGS)

STATE OF WISCONSIN
DEPARTMENT OF TRANSPORTATION

APPROVED
5/23/2011 /S/ Jerry H. Zogg
DATE ROADWAY STANDARDS DEVELOPMENT ENGINEER
FHWA

6

S.D.D. 14 B 44-1c

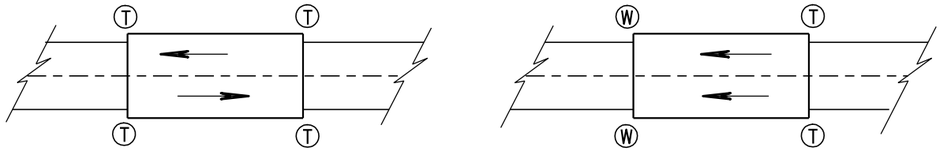

TWO WAY TRAFFIC

ONE WAY TRAFFIC

Ⓣ THRIE BEAM CONNECTION

Ⓦ W-BEAM CONNECTION WHEN REQUIRED

TYPICAL LOCATIONS OF THRIE BEAM AND W-BEAM CONNECTIONS TO BRIDGE

GENERAL NOTES

BOLT THE THRIE BEAM TO ALL POSTS AND BLOCKOUTS. DRILL OR PUNCH BOLT HOLES IN THE BEAM IF THE POST SPACING IS LESS THAN 6'-3.

IF ROCK IS ENCOUNTERED, REMOVE ROCK TO FULL DEPTH OF POST PLUS 2½", AND 12" DIAMETER AROUND POST. SEE 14B42 FOR MORE DETAILS.

TRANSITION USES STEEL POSTS ONLY.

SEE STANDARD DETAIL DRAWING 14 B 42 FOR MORE INFORMATION.

Ⓐ BRIDGE RAILING TYPE "W" DOES NOT REQUIRE A TERMINAL CONNECTOR.

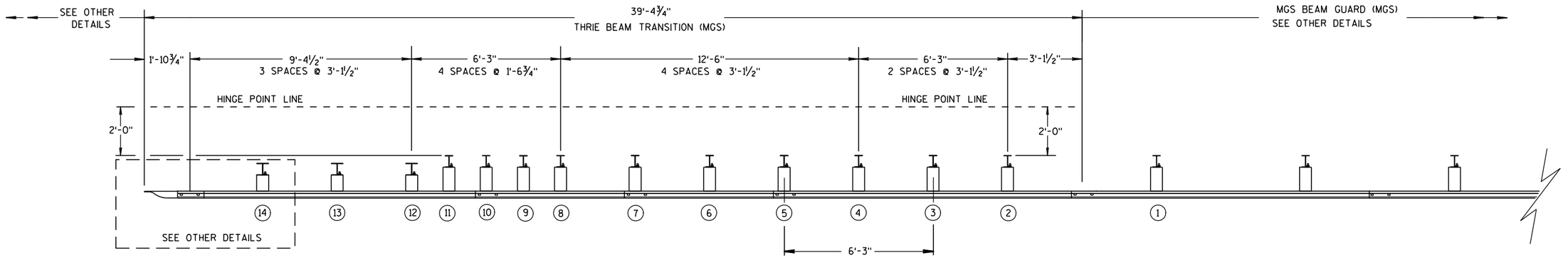

PLAN VIEW

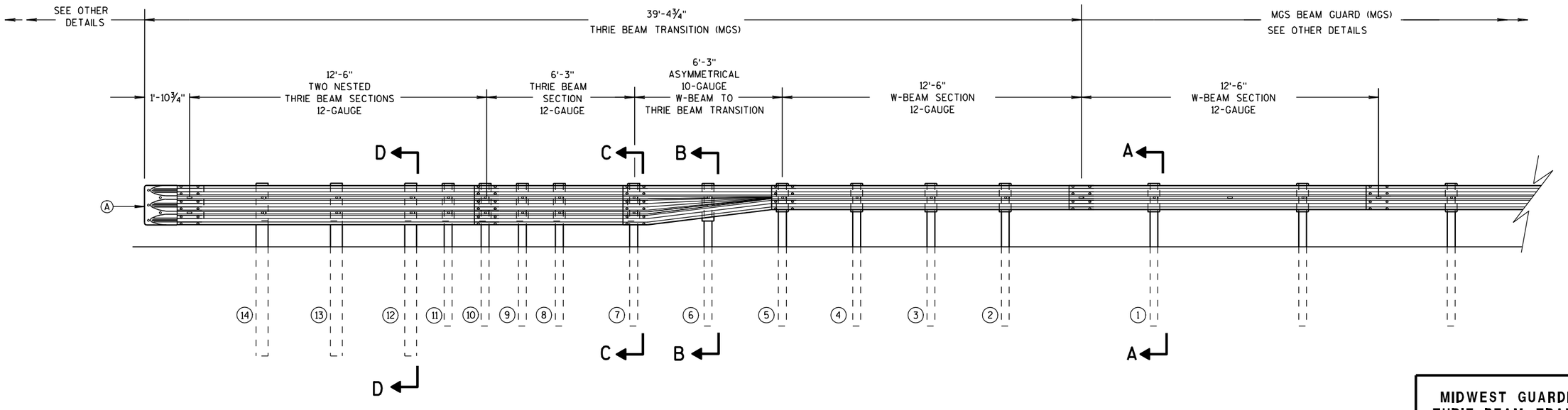

ELEVATION VIEW

MIDWEST GUARDRAIL SYSTEM THRIE BEAM TRANSITION

MIDWEST GUARDRAIL SYSTEM
THRIE BEAM TRANSITION (MGS)

STATE OF WISCONSIN
DEPARTMENT OF TRANSPO.....T

6
S.D.D. 14 B 45-3a

GENERAL NOTES

(B) TOLERANCE FOR TOP OF W-BEAM RAIL IS ± 1".

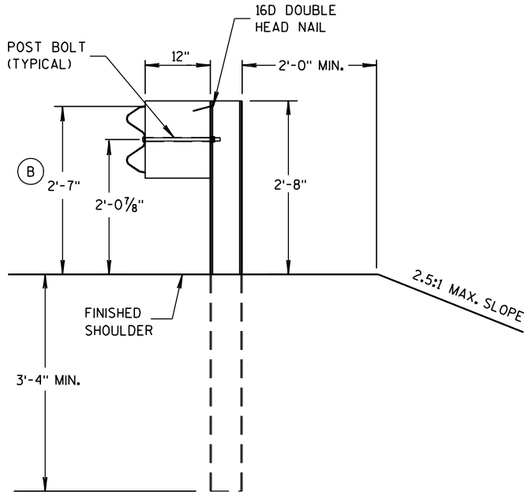

SECTION A-A

POSTS 1-5

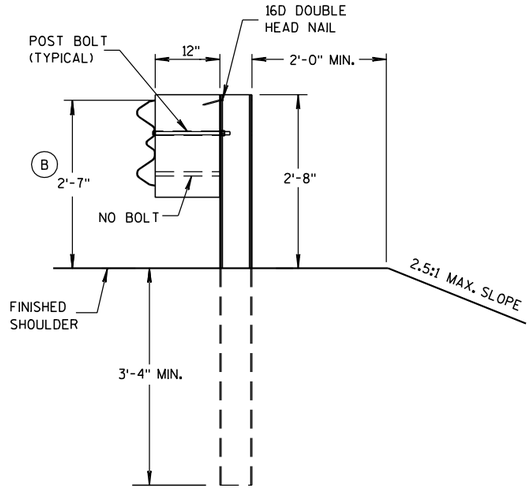

SECTION B-B

POST 6

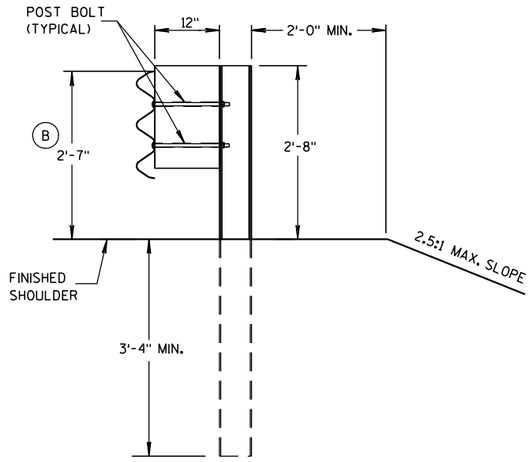

SECTION C-C

POSTS 7-11

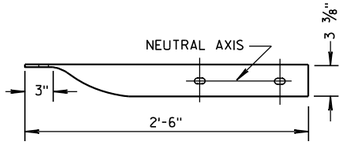

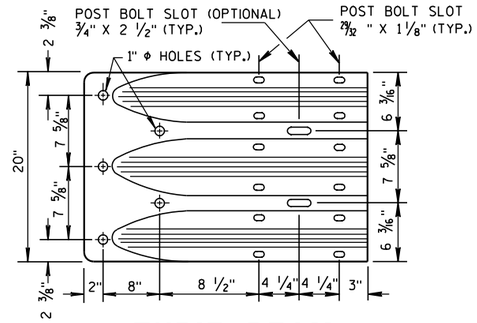

THRIE BEAM TERMINAL CONNECTOR

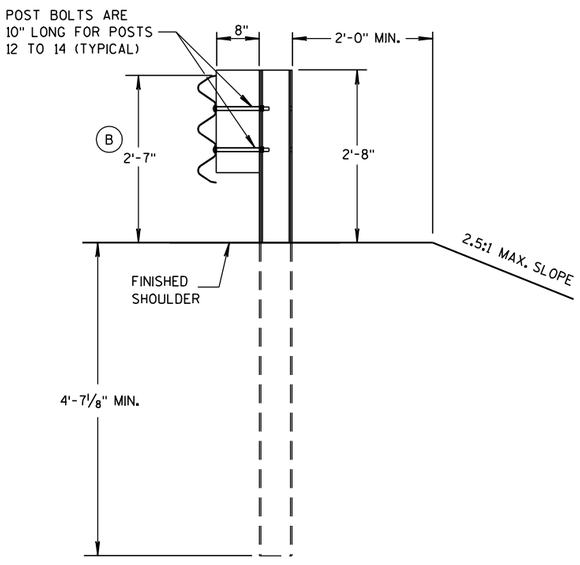

SECTION D-D

POSTS 12-14

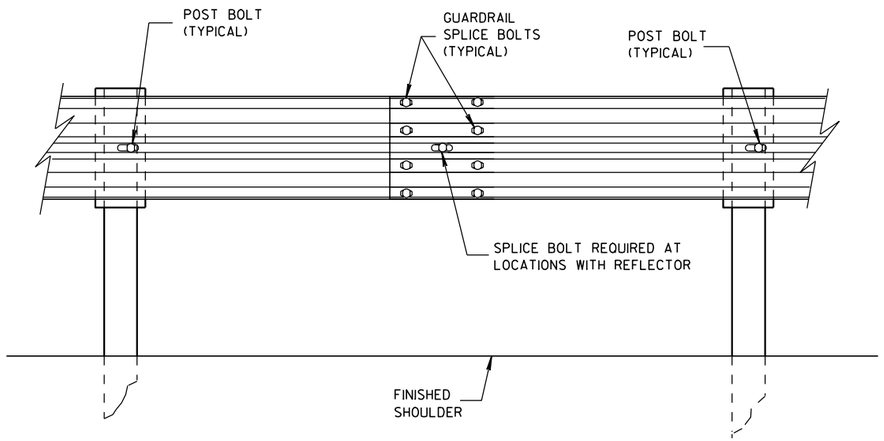

SPLICE DETAIL

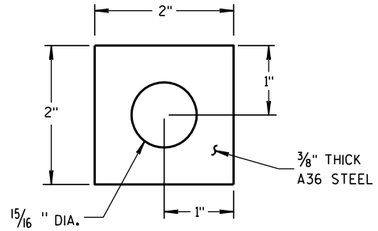

PLATE WASHER DETAIL

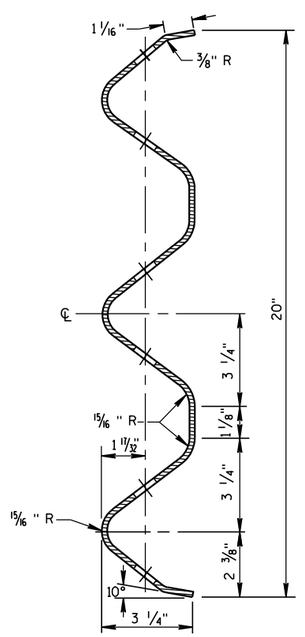

SECTION THRU THRIE BEAM RAIL ELEMENT

MIDWEST GUARDRAIL SYSTEM
THRIE BEAM TRANSITION (MGS)

STATE OF WISCONSIN
DEPARTMENT OF TRANSPORTATION

6
S.D.D. 14 B 45-3b

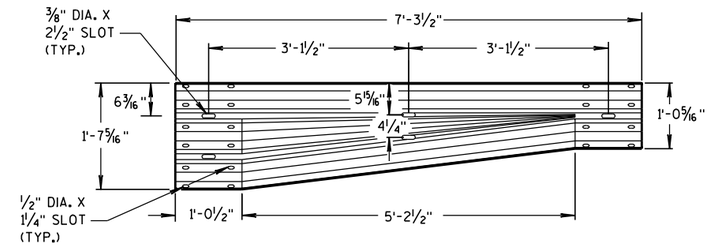

W-BEAM TO THRIE BEAM TRANSITION SECTION

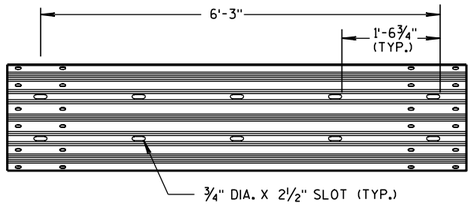

6'-3" THRIE BEAM SECTION

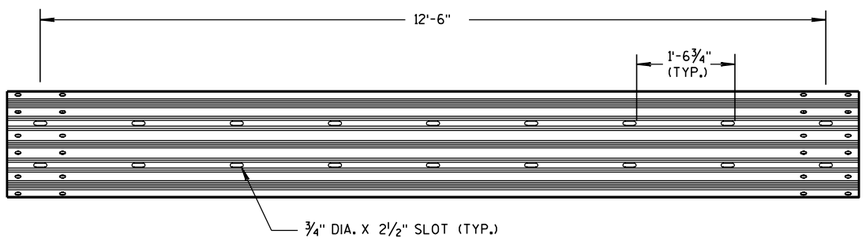

12'-6" THRIE BEAM SECTION

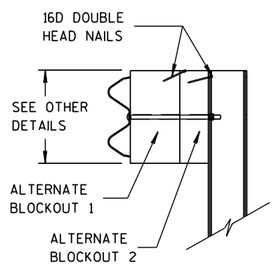

SIDE VIEW

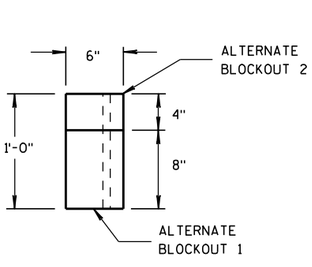

TOP VIEW

ALTERNATE WOOD BLOCKOUT DETAIL

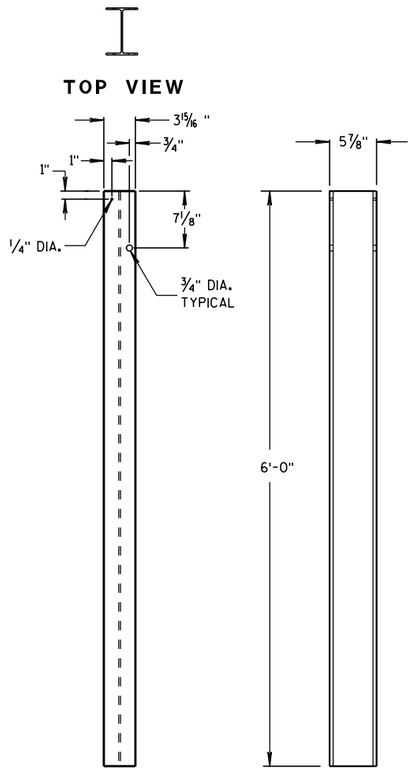

STEEL POSTS 1-5

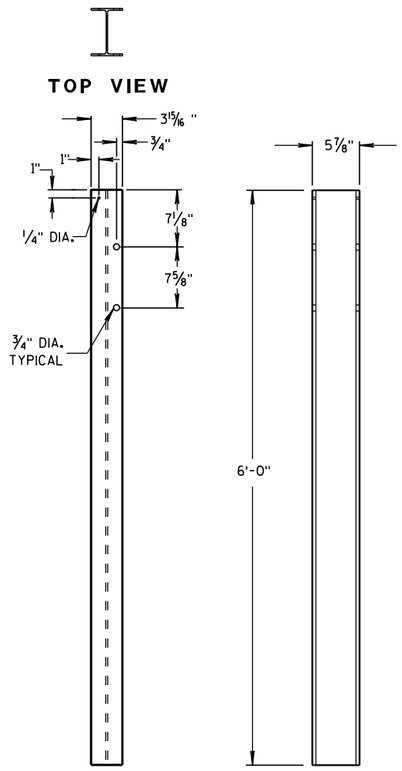

STEEL POSTS 6-11

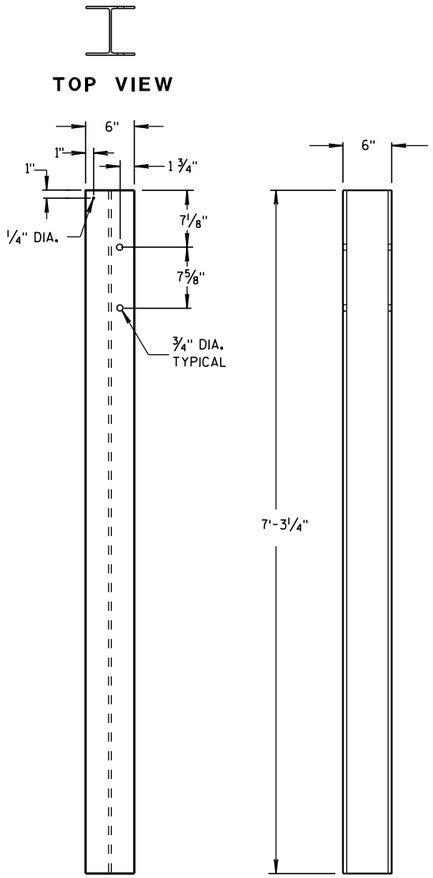

STEEL POSTS 12-14

(1) WOOD BLOCKS MAY BE CONSTRUCTED OUT OF 2 WOOD BLOCKS. SEE ALTERNATE WOOD BLOCK DETAIL.

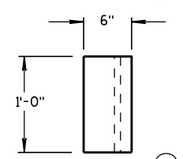

TOP VIEW (1)

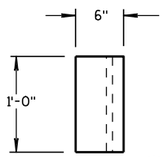

TOP VIEW (1)

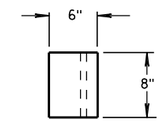

TOP VIEW

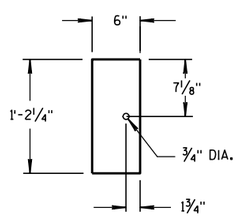

FRONT VIEW

BLOCKOUT POSTS 1-5

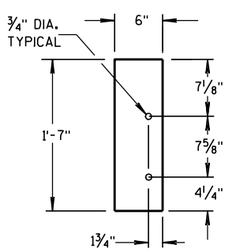

FRONT VIEW

BLOCKOUT POSTS 6-11

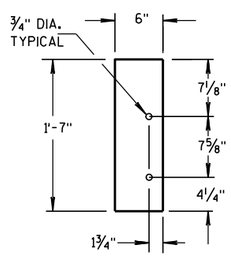

FRONT VIEW

BLOCKOUT POSTS 12-14

STEEL POST SIZES

POST NUMBER	SECTION TYPE	LENGTH
1	W6x9	72"
2	W6x9	72"
3	W6x9	72"
4	W6x9	72"
5	W6x9	72"
6	W6x9	72"
7	W6x9	72"
8	W6x9	72"
9	W6x9	72"
10	W6x9	72"
11	W6x9	72"
12	W6x15	87 1/8"
13	W6x15	87 1/8"
14	W6x15	87 1/8"

MIDWEST GUARDRAIL SYSTEM
THRIE BEAM TRANSITION (MGS)

STATE OF WISCONSIN
DEPARTMENT OF TRANSPORTATION

6

S.D.D. 14 B 45-3c

6

S.D.D. 14 B 45-3c

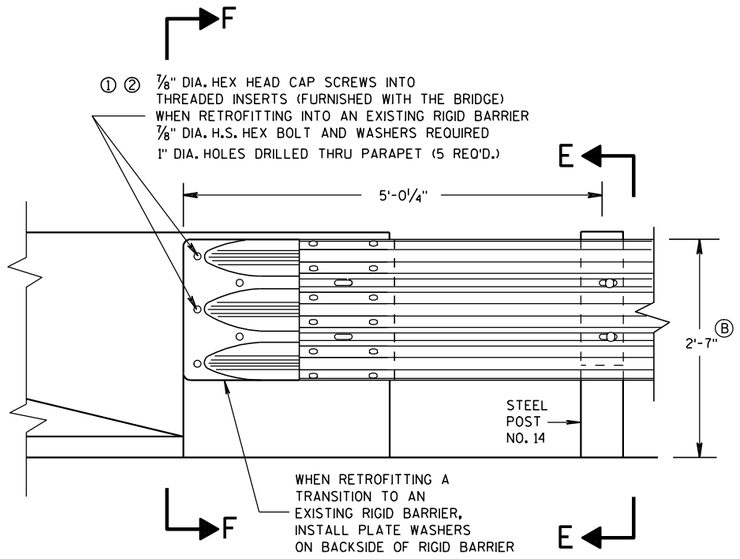

FRONT VIEW

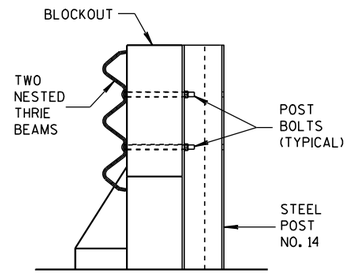

SECTION E-E

THRIE BEAM CONNECTION TO BRIDGE PARAPET WITH SQUARE ENDS

GENERAL NOTES

THESE ARE TYPICAL CONNECTION DETAILS. ADJUST THE POSTION OF CONNECTIONS TO EXISTING BRIDGES TO FIT THE ACTUAL BRIDGE AND SITE DIMENSIONS.

① DRILLING BOLT HOLES THROUGH THE PARAPET, BOLTS, NUTS, WASHERS AND REPAIRING DAMAGED CONCRETE ARE INCIDENTAL TO THE CONTRACT.

② BOLTS MAY BE A325 BOLTS OR A449 BOLTS. BOLT LENGTH AND THREADING LENGTH ARE TO ALLOW FOR A TIGHT CONNECTION BETWEEN RIGID BARRIER AND THRIE BEAM CONNECTION PLATE. CONTRACTOR IS TO FIELD VERIFY BOLT LENGTH AND THREAD LENGTH. ONE ROUND WASHER REQUIRED BETWEEN BOLT HEAD AND THRIE BEAM CONNECTOR PLATE. BOLTS THAT EXTEND THROUGH THE PARAPET AND OUT THE BACK FACE REQUIRE A HARDENED ROUND STEEL WASHER THAT IS 2" O.D. X 5/8" THICK AND ONE PLATE WASHER. REPAIR ANY DAMAGED CONCRETE FROM BOLT INSTALLATION.

③ THE RECESS FOR A W-BEAM CONNECTION, WHICH EXISTS ON SOME PARAPETS OF THIS TYPE, SHALL BE FILLED WITH A TREATED TIMBER BLOCKOUT. BLOCKOUT SIZE IS 1'-6" X 2'-0" X 3 1/2".

Ⓑ TOLERANCE FOR TOP OF BEAM IS ± 1".

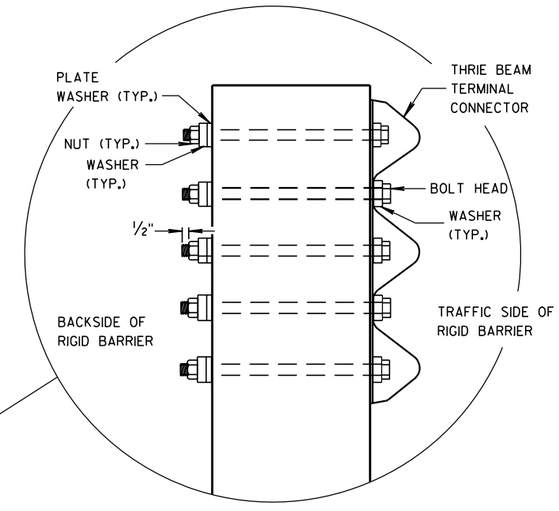

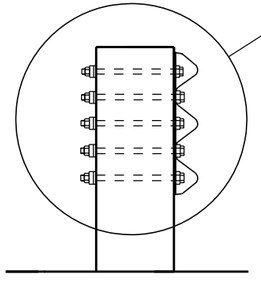

SECTION F-F

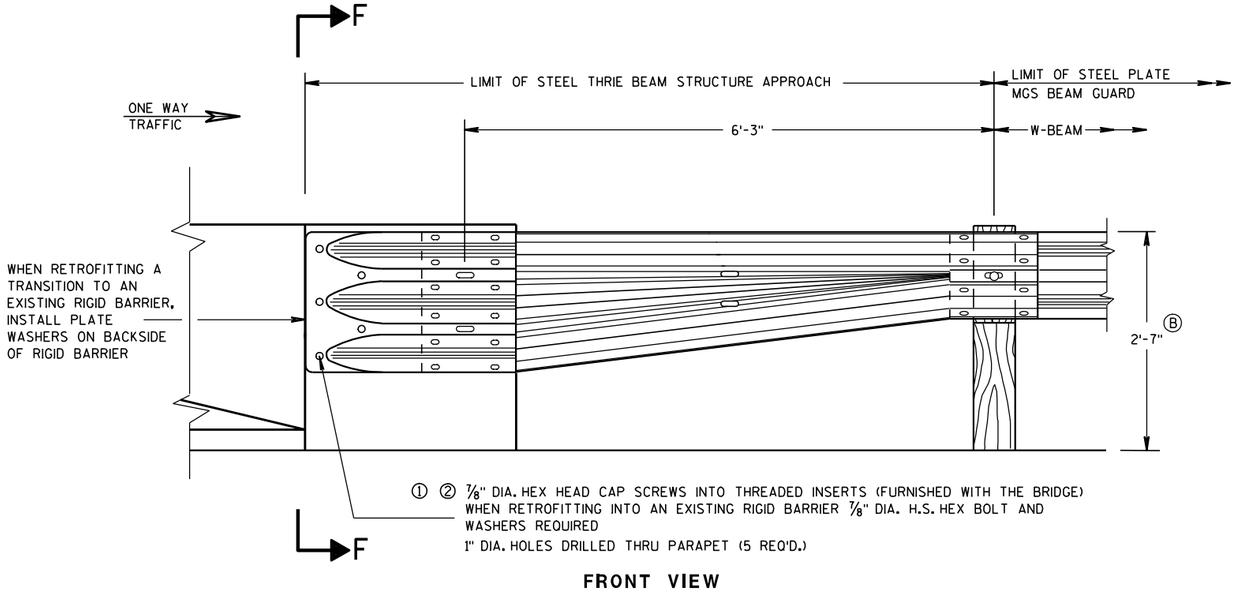

FRONT VIEW

W BEAM TRANSITION AND CONNECTION TO BRIDGE PARAPETS WITH SQUARE ENDS

(USE ONLY ON THE TRAFFIC EXIT END OF ONE WAY BRIDGES)

MIDWEST GUARDRAIL SYSTEM
THRIE BEAM TRANSITION (MGS)

STATE OF WISCONSIN
DEPARTMENT OF TRANSPORTATION

APPROVED

8/31/2012 — DATE

/S/ Jerry H. [illegible] — ROADWAY STANDARDS ENGINEER

FHWA

GENERAL NOTES

THESE ARE TYPICAL CONNECTION DETAILS. ADJUST THE POSTION OF CONNECTIONS TO EXISTING BRIDGES TO FIT THE ACTUAL BRIDGE AND SITE DIMENSIONS.

① DRILLING BOLT HOLES THROUGH THE PARAPET, BOLTS, NUTS, WASHERS AND REPAIRING DAMAGED CONCRETE ARE INCIDENTAL TO THE CONTRACT.

② BOLTS MAY BE A325 BOLTS OR A449 BOLTS. BOLT LENGTH AND THREADING LENGTH ARE TO ALLOW FOR A TIGHT CONNECTION BETWEEN RIGID BARRIER AND THRIE BEAM CONNECTION PLATE. CONTRACTOR IS TO FIELD VERIFY BOLT LENGTH AND THREAD LENGTH. ONE ROUND WASHER REQUIRED BETWEEN BOLT HEAD AND THRIE BEAM CONNECTOR PLATE. BOLTS THAT EXTEND THROUGH THE PARAPET AND OUT THE BACK FACE REQUIRE A HARDENED ROUND STEEL WASHER THAT IS 2" O.D. X 5/8" THICK AND ONE PLATE WASHER. REPAIR ANY DAMAGED CONCRETE FROM BOLT INSTALLATION.

③ THE RECESS FOR A W-BEAM CONNECTION, WHICH EXISTS ON SOME PARAPETS OF THIS TYPE, SHALL BE FILLED WITH A TREATED TIMBER BLOCKOUT. BLOCKOUT SIZE IS 1'-6" X 2'-0" X 3 1/2". BLOCK IS INCIDENTAL TO THE CONTRACT.

④ BOLT, NUT AND WASHERS NOT REQUIRED FOR THIS LOCATION WHEN RETROFITTING AN EXISTING PAPAPET AND THE HOLE IS EITHER ABOVE PARAPET OR WITHIN 4 INCHES OF THE EDGE OF PARAPET.

Ⓑ TOLERANCE FOR TOP OF BEAM IS ± 1".

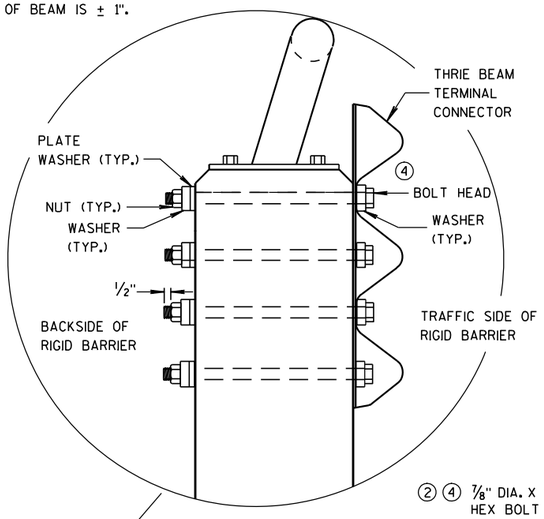

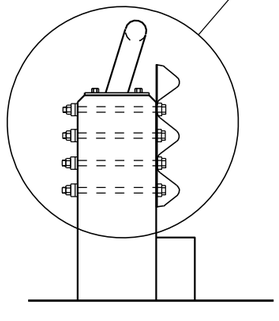

SECTION G-G

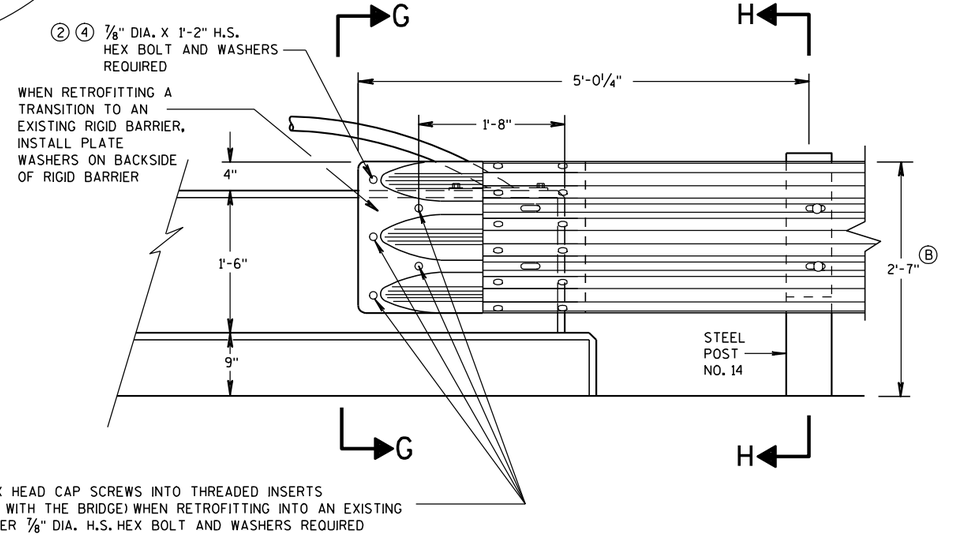

FRONT VIEW

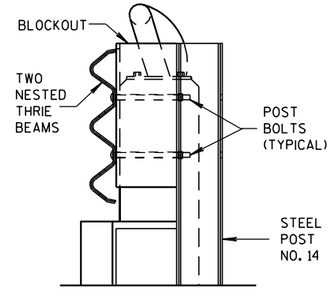

SECTION H-H

THRIE BEAM CONNECTION TO VERTICAL FACED PARAPETS

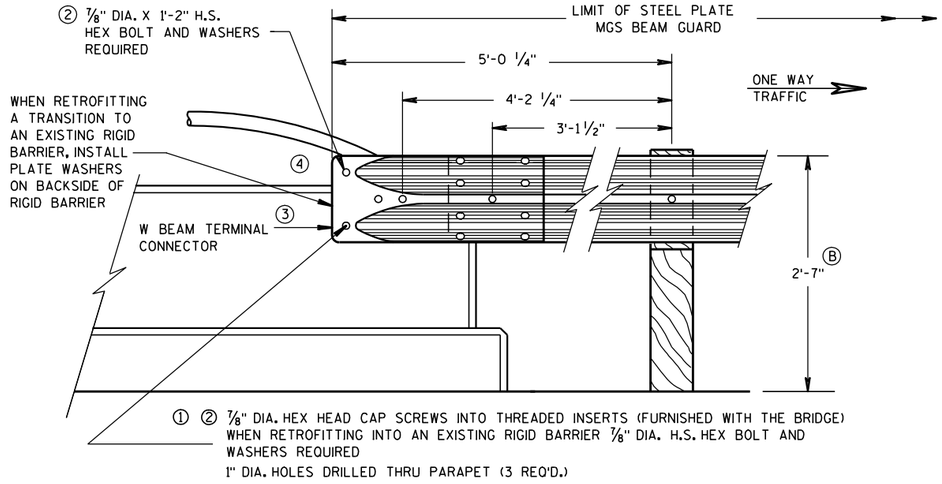

FRONT VIEW

W BEAM CONNECTION TO VERTICAL FACE PARAPET
(USE ONLY ON THE TRAFFIC EXIT END OF ONE WAY BRIDGES)

MIDWEST GUARDRAIL SYSTEM
THRIE BEAM TRANSITION (MGS)

STATE OF WISCONSIN
DEPARTMENT OF TRANSPORTATION

APPROVED

8-31-2012
DATE

/S/ Jerry H. Zogg
ROADWAY STANDARDS ENGINEER

FHWA

6

S.D.D. 14 B 45-3e

6

S.D.D. 14 B 45-3e

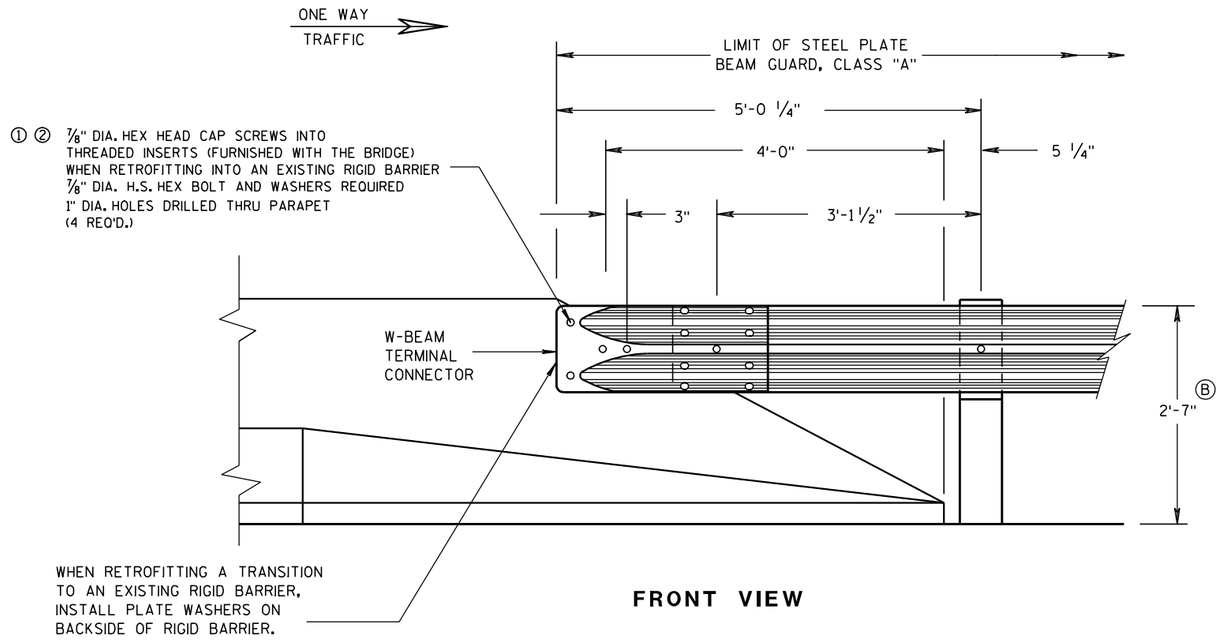

FRONT VIEW

W BEAM CONNECTION TO PARAPETS WITH SLOPED ENDS

(USE ONLY AT TRAFFIC EXIT END OF ONE WAY BRIDGE)

GENERAL NOTES

① DRILLING BOLT HOLES THROUGH THE PARAPET, BOLTS, NUTS, WASHERS AND REPAIRING DAMAGED CONCRETE ARE INCIDENTAL TO THE CONTRACT.

② BOLTS MAY BE A325 BOLTS OR A449 BOLTS. BOLT LENGTH AND THREADING LENGTH ARE TO ALLOW FOR A TIGHT CONNECTION BETWEEN RIGID BARRIER AND THRIE BEAM CONNECTION PLATE. CONTRACTOR IS TO FIELD VERIFY BOLT LENGTH AND THREAD LENGTH. ONE ROUND WASHER REQUIRED BETWEEN BOLT HEAD AND THRIE BEAM CONNECTOR PLATE. BOLTS THAT EXTEND THROUGH THE PARAPET AND OUT THE BACK FACE REQUIRE A HARDENED ROUND STEEL WASHER THAT IS 2" O.D. X 5/8" THICK AND ONE PLATE WASHER. REPAIR ANY DAMAGED CONCRETE FROM BOLT INSTALLATION.

Ⓑ TOLERANCE FOR TOP OF BEAM IS ± 1".

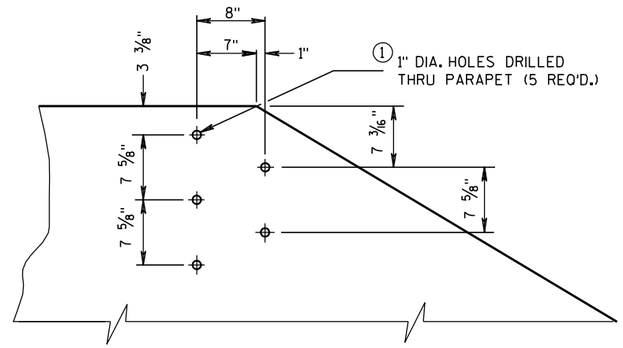

DRILL HOLE LOCATION AND PATTERN FOR THRIE BEAM CONNECTION

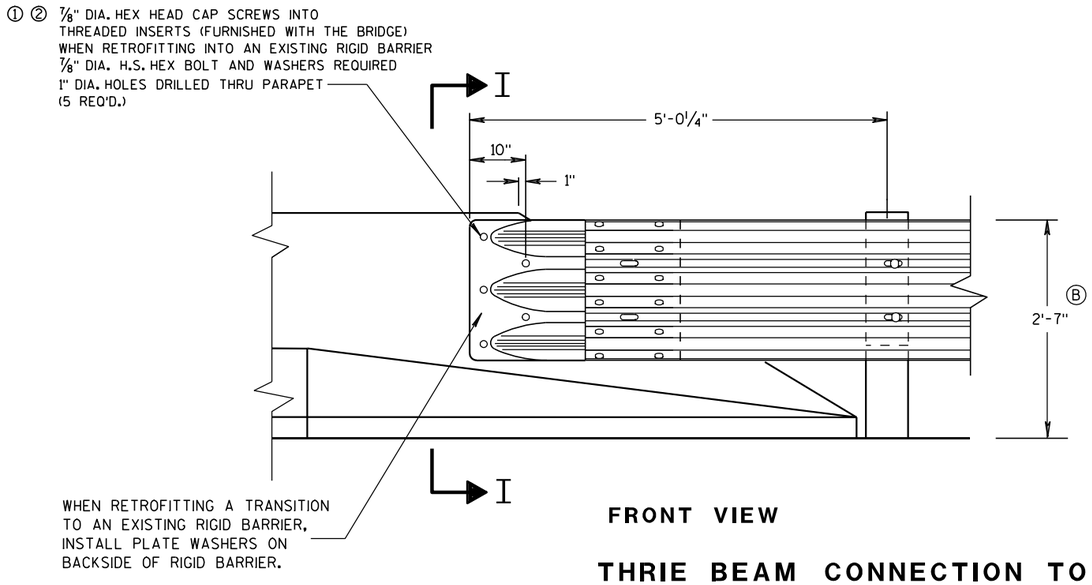

FRONT VIEW

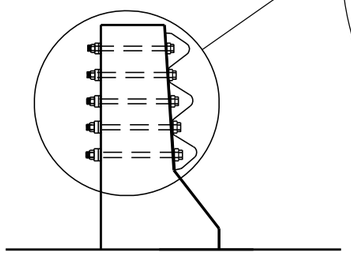

SECTION I-I

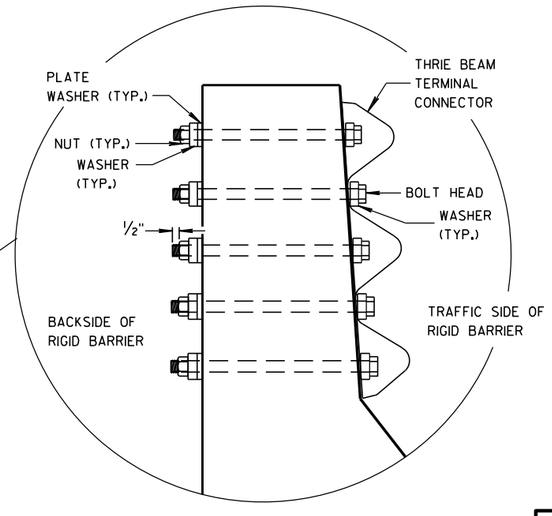

THRIE BEAM CONNECTION TO BRIDGE PARAPETS WITH SLOPED ENDS

MIDWEST GUARDRAIL SYSTEM
THRIE BEAM TRANSITION (MGS)

STATE OF WISCONSIN
DEPARTMENT OF TRANSPORTATION

APPROVED

8/31/2012 — DATE

/S/ Jerry H. Zogg — ROADWAY STANDARDS ENGINEER

FHWA

6

S.D.D. 14 B 45-3f

6

S.D.D. 14 B 45-3f

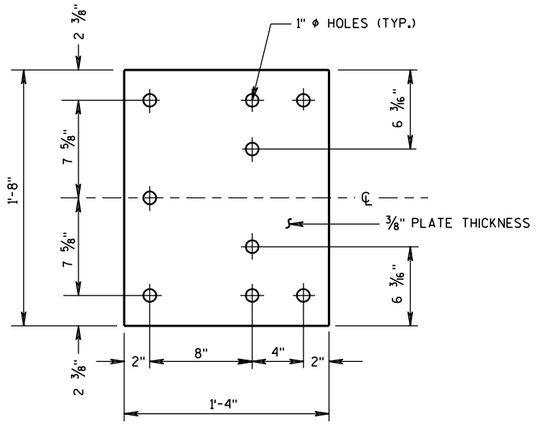

BACK-UP PLATE DETAIL

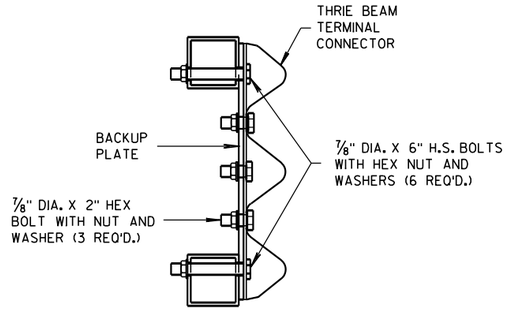

SECTION J-J

GENERAL NOTES

(1) DRILLING HOLES THROUGH THE PAPRPET, BOLTS, NUTS, WASHERS AND REPAIRING DAMAGED CONCRETE ARE INCIDENTAL TO THE CONTRACT.

(B) TOLERANCE FOR TOP OF BEAM IS ± 1".

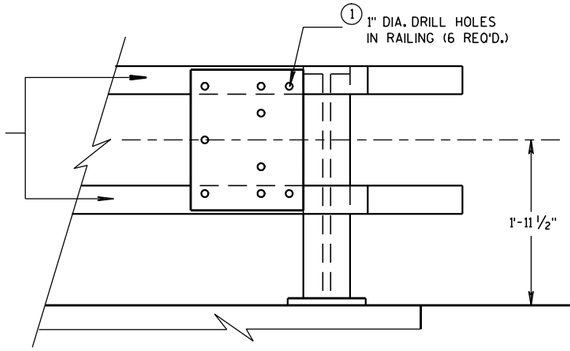

BACK-UP PLATE MOUNTING ONTO BRIDGE RAILING

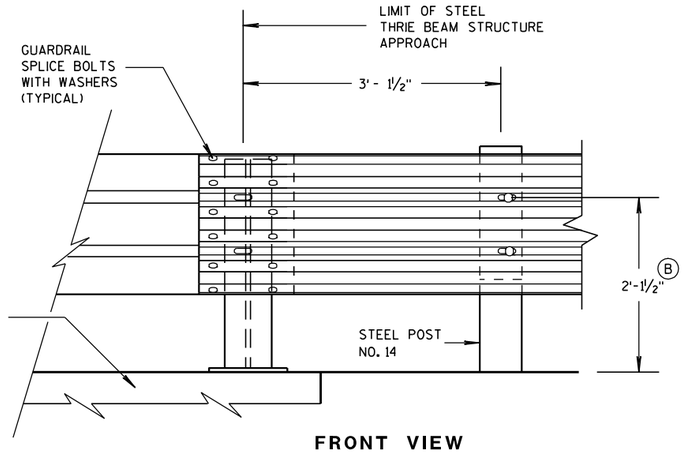

FRONT VIEW

THRIE BEAM CONNECTION TO STEEL RAILING TYPE "W"

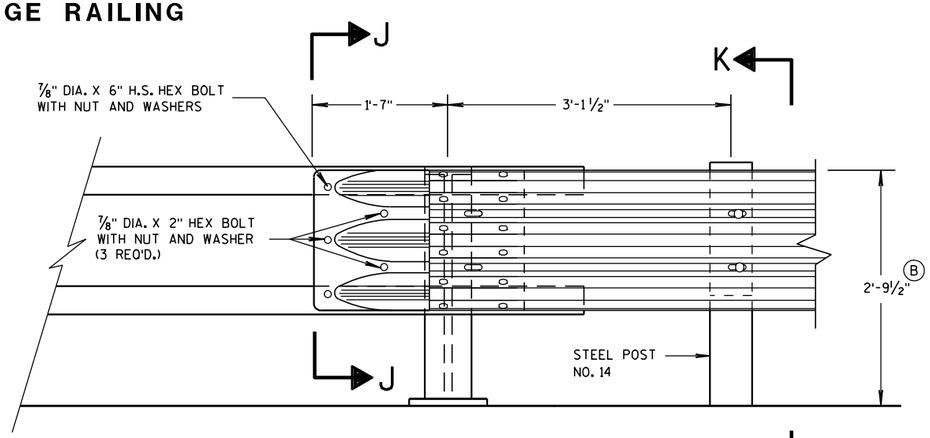

FRONT VIEW

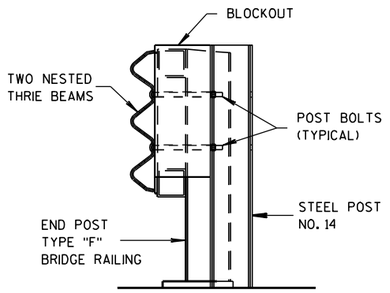

SECTION K-K

THRIE BEAM CONNECTION TO TUBULAR RAILING TYPE "F"

MIDWEST GUARDRAIL SYSTEM THRIE BEAM TRANSITION (MGS)
STATE OF WISCONSIN DEPARTMENT OF TRANSPORTATION
APPROVED 8/31/2012 DATE /S/ Jerry H. Zogg ROADWAY STANDARDS DEVELOPMENT ENGINEER FHWA

6
S.D.D. 14 B 45-3g

GENERAL NOTES

(B) TOLERANCE FOR TOP OF W-BEAM RAIL IS ± 1".

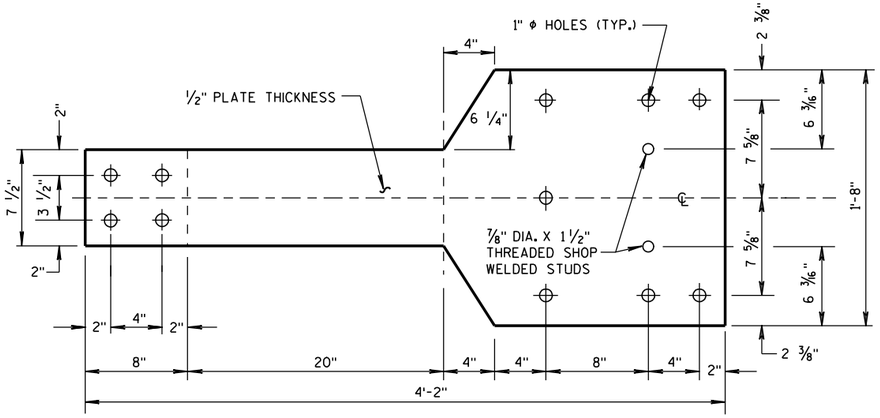

FRONT VIEW

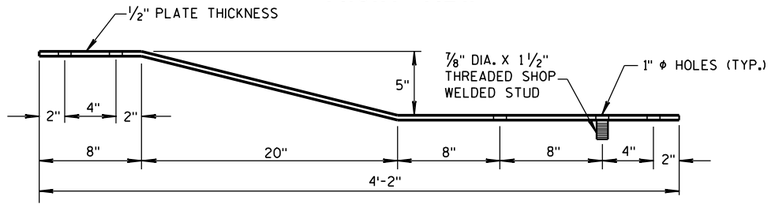

PLAN VIEW

BACK-UP PLATE DETAIL, TYPE "M"

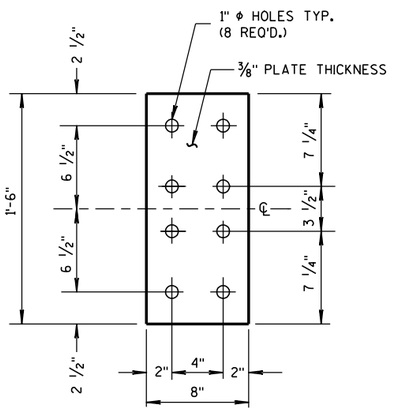

FRONT VIEW

ANCHOR PLATE DETAIL, TYPE "M"

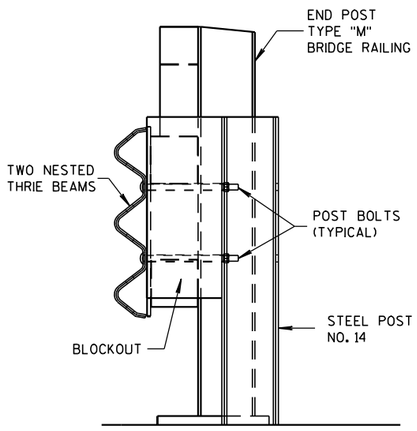

SECTION M-M

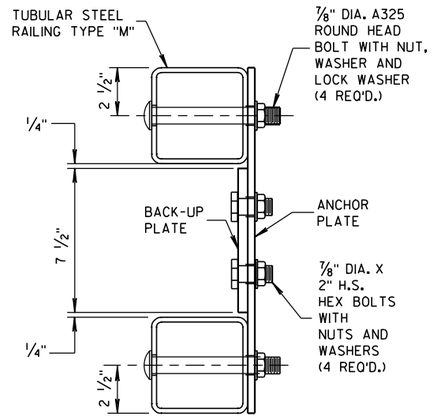

SECTION L-L

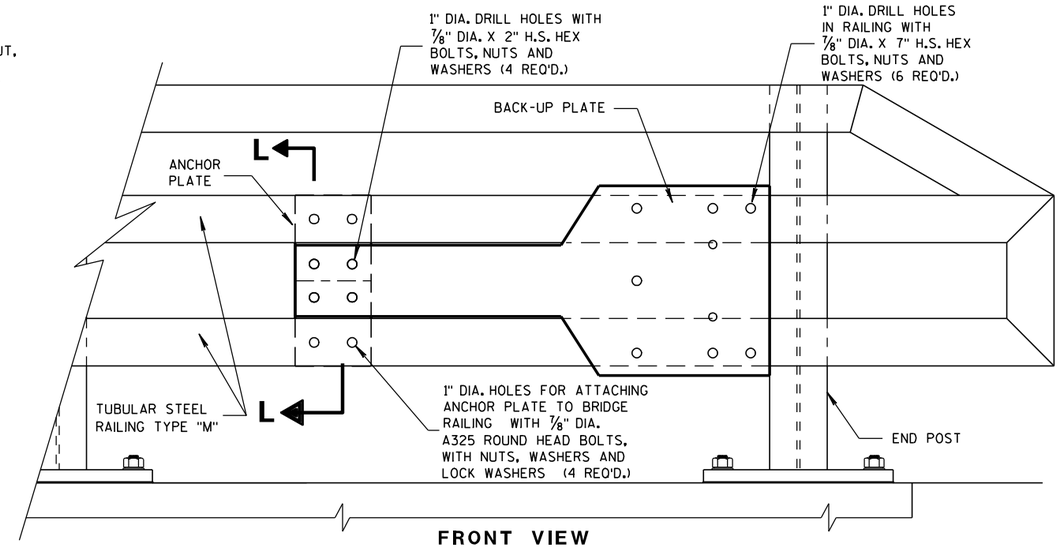

FRONT VIEW

ANCHOR AND BACK-UP PLATE MOUNTING TO BRIDGE RAILING, TYPE "M"

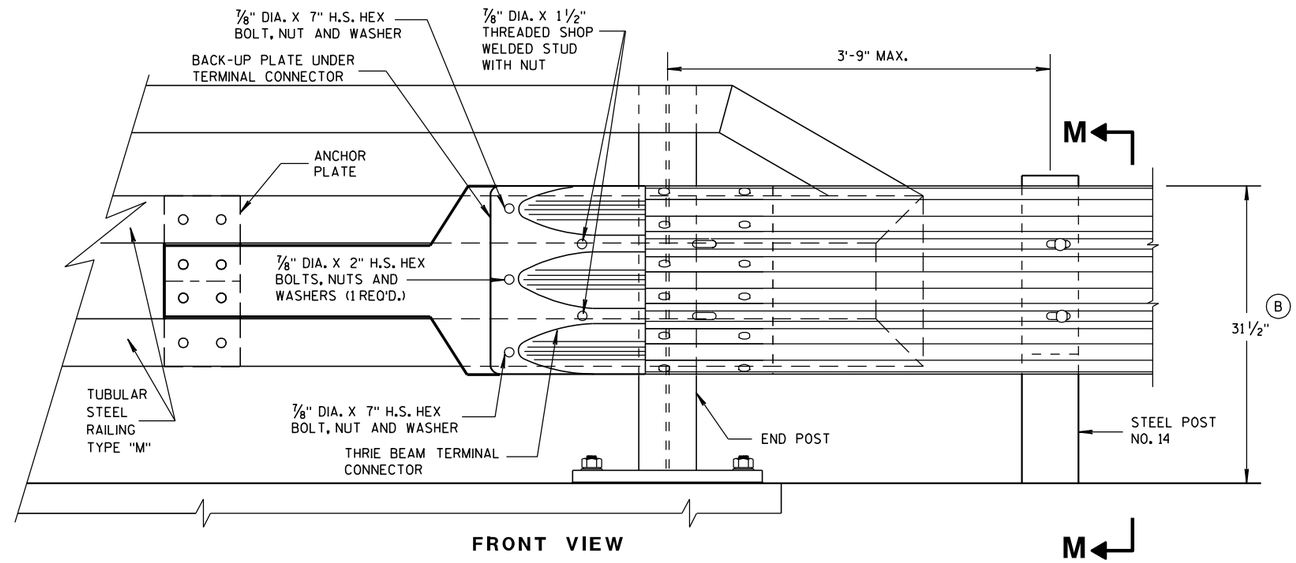

FRONT VIEW

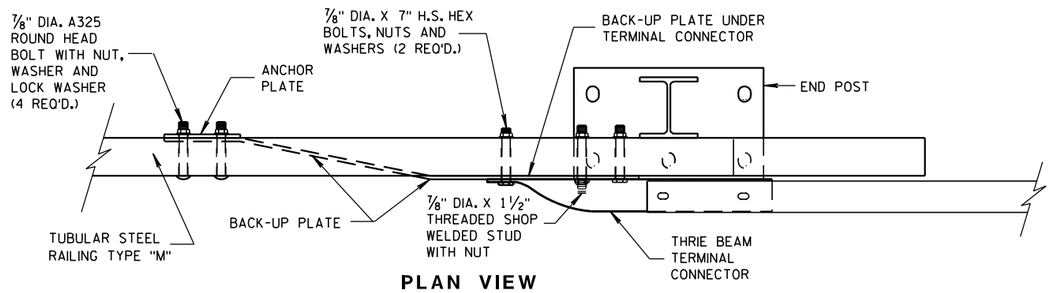

PLAN VIEW

THRIE BEAM CONNECTION TO TUBULAR RAILING, TYPE "M"

MIDWEST GUARDRAIL SYSTEM THRIE BEAM TRANSITION (MGS)

STATE OF WISCONSIN
DEPARTMENT OF TRANSPORTATION

APPROVED

8-31-2012
DATE

/S/ Jerry H. Zogg
ROADWAY STANDARDS ENGINEER

96

ENT

FHWA

6

S.D.D. 14 B 45-3h

6

S.D.D. 14 B 45-3h

GENERAL NOTES

COVER PLATE PANELS ARE 3/16" THICK.

ALL STIFFENERS ARE 1/4" THICK.

CONNECTOR PLATE SHALL BE FABRICATED FROM ASTM GRADE A36 STEEL AND GALVANIZED.

FOR GALVANIZED REQUIREMENTS, SEE SECTION 614 OF THE STANDARD SPECIFICATIONS.

ALL HOLE DIAMETERS SHALL BE 1".

FOR OPPOSITE SIDE INSTALLATION MIRROR DRAWINGS.

(1) STIFFENERS LOCATED AT THE OUTSIDE EDGES OF THE COVER PLATES SHALL BE WELDED AS FOLLOWS:
SINGLE BEVEL GROOVE WELD ON EXTERNAL SIDES AND 3/16" FILLET WELD BY 1" LONG SPACED AT 2" ON INTERNAL SIDES.

(2) STIFFENERS LOCATED ON THE INSIDE OF THE COVER PLATE SHALL BE WELDED AS FOLLOWS:
3/16" FILLET WELD BY 1" LONG SPACED AT 2".

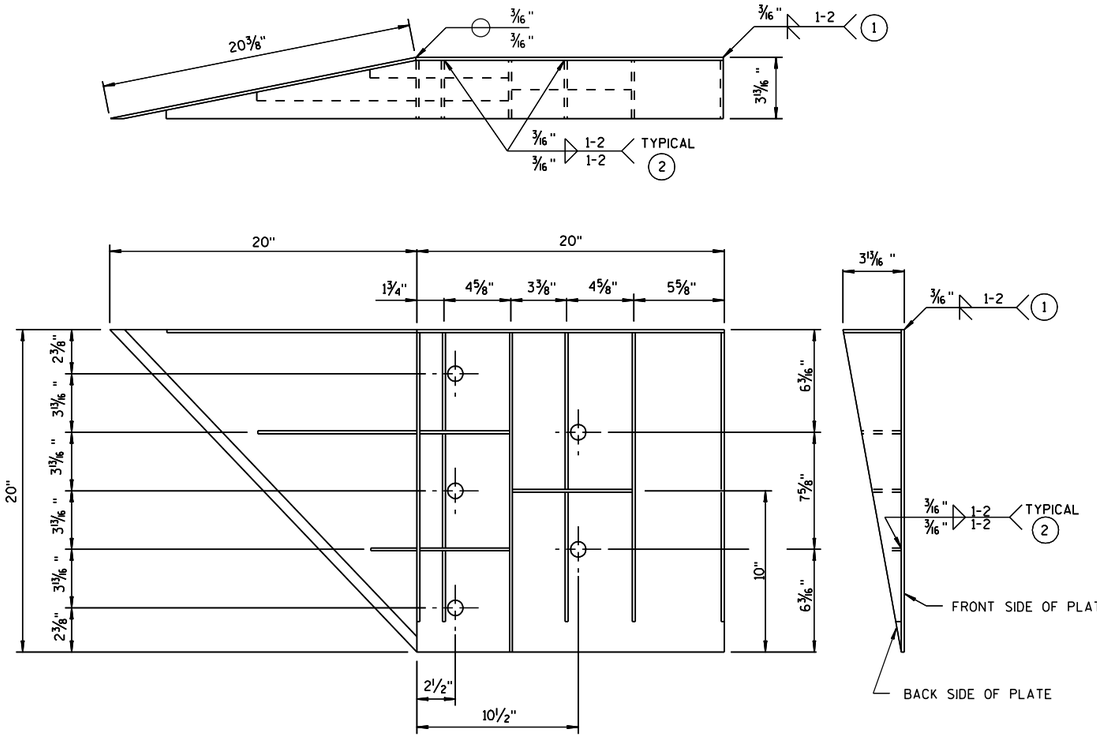

WELDING INSTRUCTION

(VIEWED FROM BACK SIDE OF PLATE)

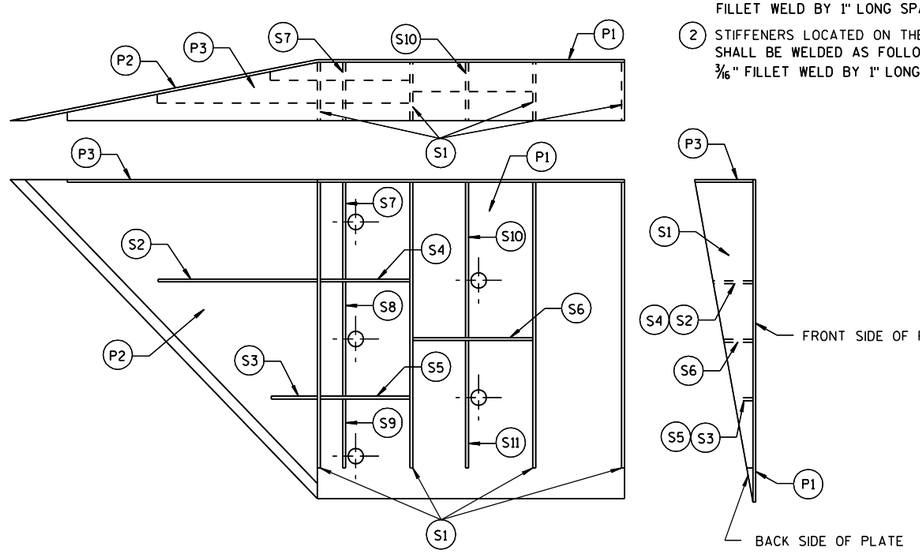

PLATE AND STIFFENER IDENTIFICATION

(VIEWED FROM BACK SIDE OF PLATE)

CONNECTOR PLATE DIMENSION (PER ASSEMBLY)

PLATE	QUANTITY	SHAPE	SIZE (A x B x C x D)	THICKNESS
P1	1		20" x 20"	3/16"
P2	1		20" x 20" x 28 9/16"	3/16"
P3	1		39" x 3 5/8" x 20" x 19 5/16"	3/16"
S1	4		18 7/16" x 3 5/8" x 18 3/4"	1/4"
S2	1		10 1/4" x 2 7/16" x 10 3/8" x 1/2"	1/4"
S3	1		3" x 1 1/16" x 3 1/8" x 1/2"	1/4"
S4	1		6 1/8" x 2 7/16"	1/4"
S5	1		6 1/8" x 1 1/16"	1/4"
S6	1		7 3/4" x 1 3/4"	1/4"
S7	1		2 9/16" x 6" x 3 5/8" x 5 7/8"	1/4"
S8	1		1 5/32" x 7 1/2" x 2 1/2" x 7 3/8"	1/4"
S9	1		6 1/16" x 6 3/16" x 1 3/32"	1/4"
S10	1		1 7/8" x 9 7/8" x 3 5/8" x 9 11/16"	1/4"
S11	1		8 1/2" x 8 3/4" x 1 13/16"	1/4"

SINGLE SLOPE CONNECTION PLATE

MIDWEST GUARDRAIL SYSTEM
THRIE BEAM TRANSITION (MGS)

STATE OF WISCONSIN
DEPARTMENT OF TRANSPORTATION

APPROVED
8/31/2012 — DATE
/S/ Jerry H ---- — ROADWAY STANDARDS ENGINEER
97
FHWA

6

S.D.D. 14 B 45-3i

6

S.D.D. 14 B 45-3i

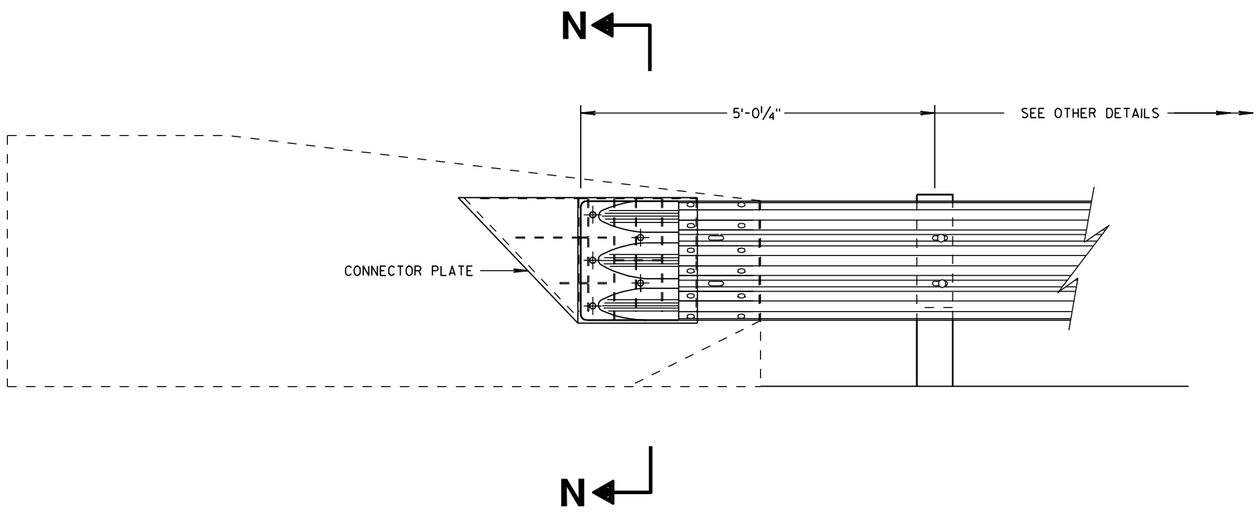

THRIE BEAM CONNECTION TO SINGLE SLOPE BARRIER

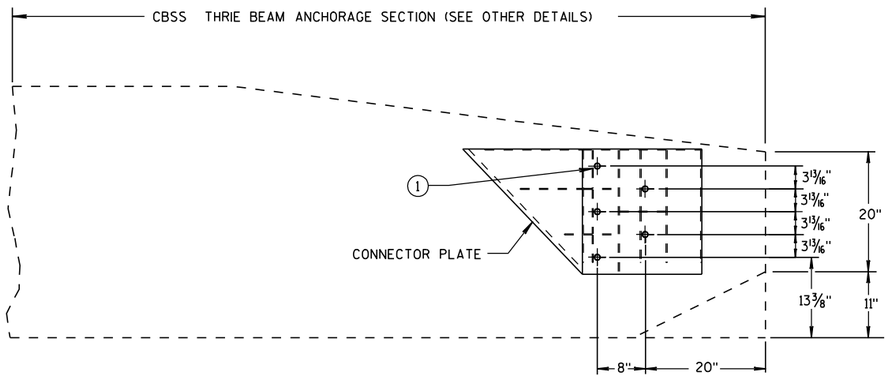

SINGLE SLOPE CONNECTION PLATE PLACEMENT

GENERAL NOTES

CONNECTOR PLATE, DRILLING BOLT HOLES THROUGH THE PARAPET, BOLTS, NUTS, WASHERS AND REPAIRING DAMAGED CONCRETE ARE INCIDENTAL TO THE CONTRACT.

(1) BOLTS MAY BE A325 BOLTS OR A449 BOLTS. BOLT LENGTH AND THREADING LENGTH ARE TO ALLOW FOR A TIGHT CONNECTION BETWEEN RIGID BARRIER AND THRIE BEAM CONNECTION PLATE. CONTRACTOR IS TO FIELD VERIFY BOLT LENGTH AND THREAD LENGTH. ONE ROUND WASHER REQUIRED BETWEEN BOLT HEAD AND THRIE BEAM CONNECTOR PLATE. BOLTS THAT EXTEND THROUGH THE PARAPET AND OUT THE BACK FACE REQUIRE A HARDENED ROUND STEEL WASHER THAT IS 2" O.D. X ⅝" THICK AND ONE PLATE WASHER. REPAIR ANY DAMAGED CONCRETE FROM BOLT INSTALLATION.

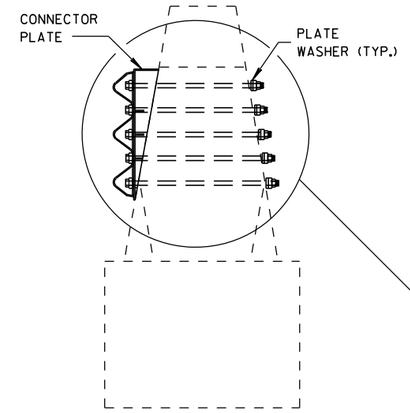

SECTION N-N

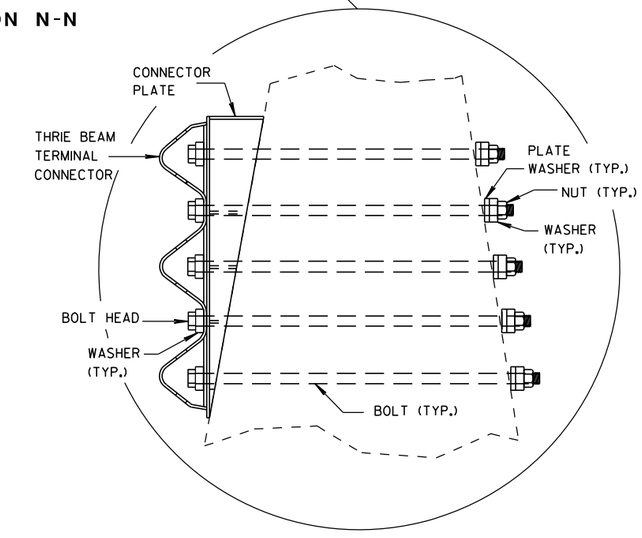

MIDWEST GUARDRAIL SYSTEM
THRIE BEAM TRANSITION (MGS)

STATE OF WISCONSIN
DEPARTMENT OF TRANSPORTATION

APPROVED
8/31/2012 — DATE
/S/ Jerry H. [illegible] — ROADWAY STANDARDS ENGINEER
FHWA

6

S.D.D. 14 B 45-3j

6

S.D.D. 14 B 45-3j

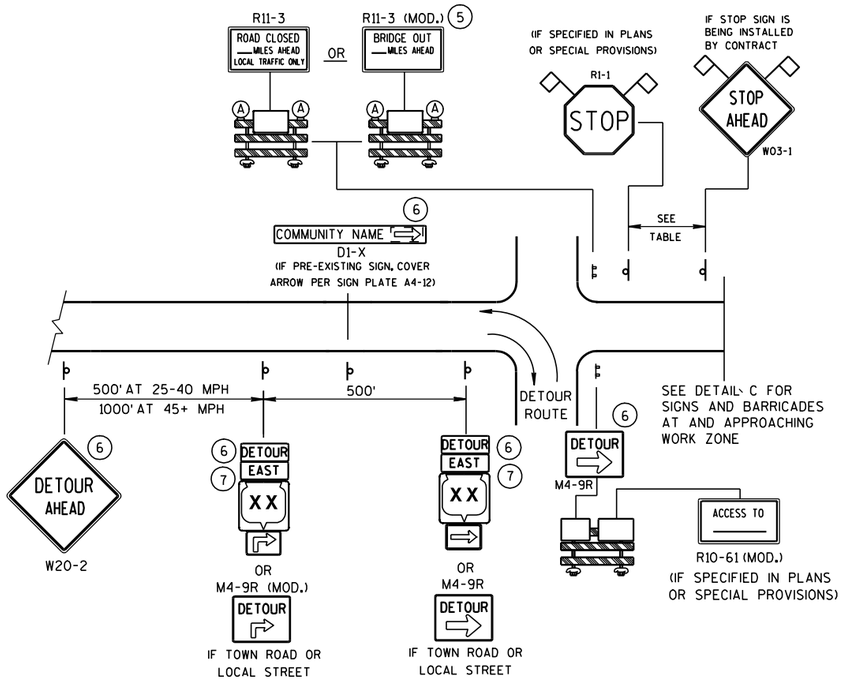

DETAIL A

MAINLINE CLOSURE WITH POSTED DETOUR

WORK ZONE GREATER THAN ½ MILE FROM DETOUR ROUTE (1000 FEET IF URBAN)

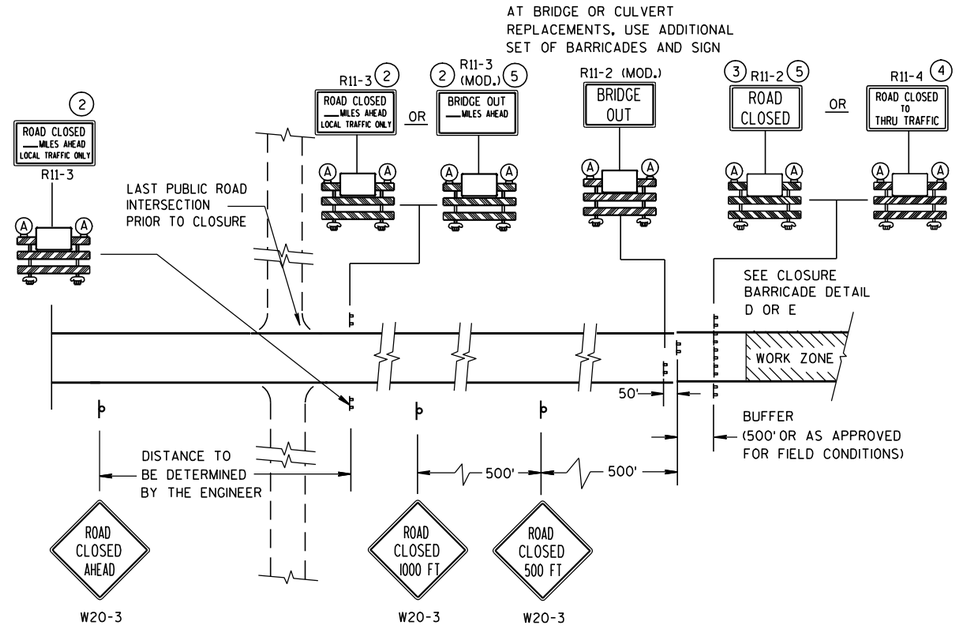

DETAIL C

MAINLINE CLOSURE, NO POSTED DETOUR

SPEED LIMIT (MPH)	"STOP AHEAD" ADVANCE WARNING DISTANCE (FT)
25	200
30	200
35	350
40	350
45	500
50	550
55	750

SEE SDD 15C2-4b
FOR GENERAL NOTES
AND FOOTNOTES ① THROUGH ⑦

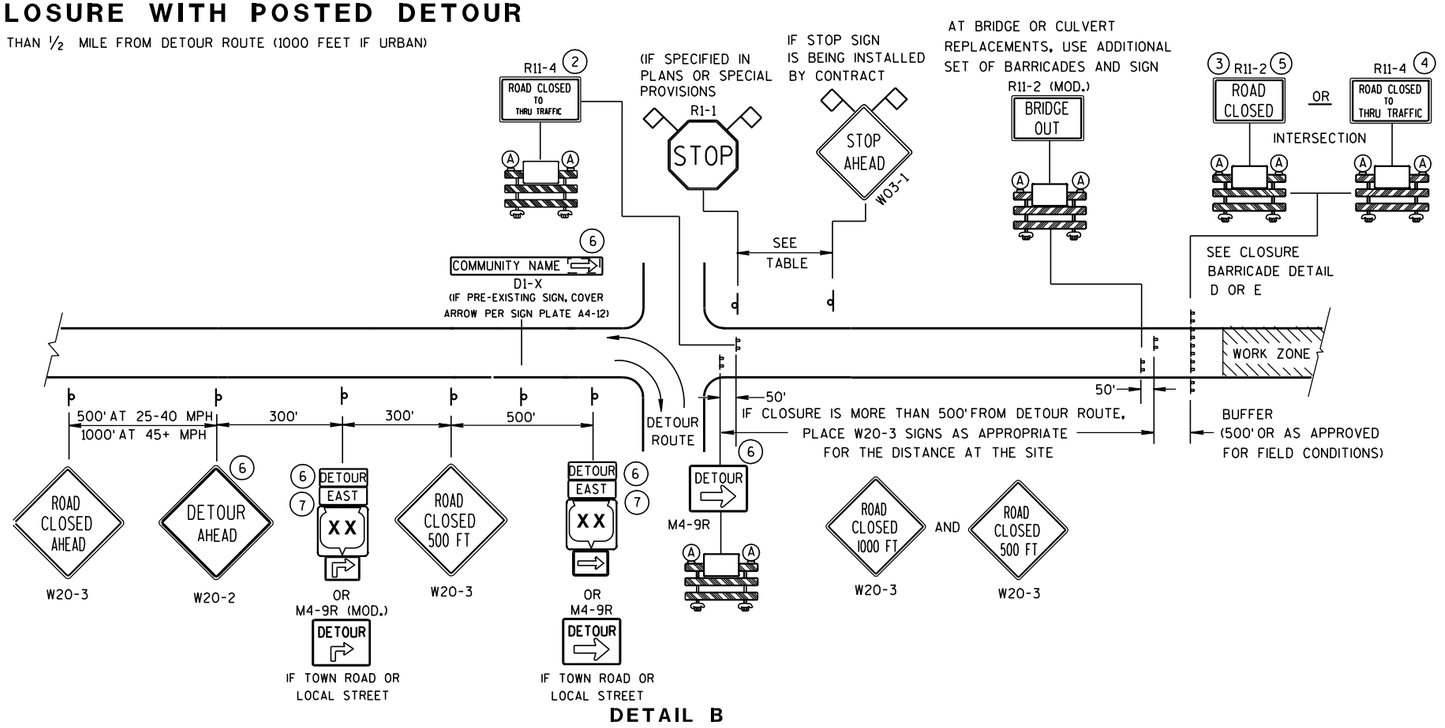

DETAIL B

MAINLINE CLOSURE WITH POSTED DETOUR

WORK ZONE LESS THAN ½ MILE FROM DETOUR ROUTE (1000 FEET IF URBAN)

LEGEND

- POST MOUNTED SIGN
- TYPE III BARRICADES
- (A) TYPE "A" LOW INTENSITY FLASHING WARNING LIGHT (FOR NIGHT USE)
- WORK ZONE
- DETOUR / EAST — M4-8 / M3-X
- XX — M1-4; COUNTY XX — M1-5A; XX — M1-6
- M05-1; M06-1
- FLAGS, 16" X 16" MIN., (ORANGE)

BARRICADES AND SIGNS FOR MAINLINE CLOSURES

STATE OF WISCONSIN
DEPARTMENT OF TRANSPORTATION

6

S.D.D. 15 C 2-4a

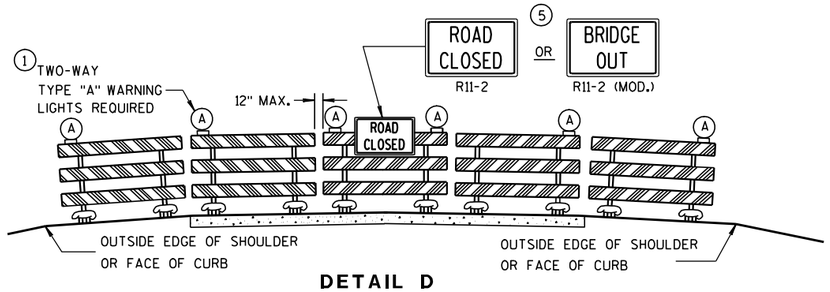

DETAIL D

ROAD CLOSURE BARRICADE DETAIL

APPROACH VIEW

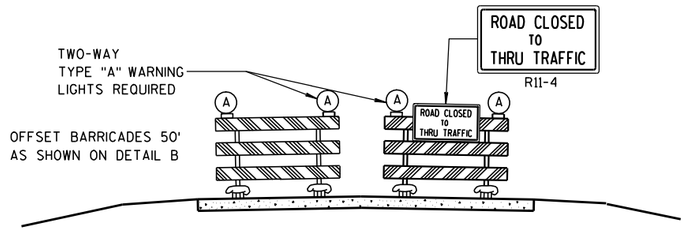

DETAIL E

LANE CLOSURE BARRICADE DETAIL

APPROACH VIEW

SEE SDD 15C2-4a FOR LEGEND

GENERAL NOTES

THE EXACT NUMBER, LOCATION, AND SPACING OF ALL SIGNS AND BARRICADES SHALL BE ADJUSTED TO FIT FIELD CONDITIONS AS APPROVED BY THE ENGINEER.

ANY SIGNS TEMPORARY OR EXISTING, WHICH CONFLICT WITH TRAFFIC CONTROL "IN USE" SHALL BE REMOVED OR COVERED AS NEEDED AND AS APPROVED BY THE ENGINEER.

THE SPACING BETWEEN TRAFFIC CONTROL SIGNS SHOULD BE ADJUSTED TO NOT CONFLICT WITH AND SHOULD PROVIDE A DESIRABLE MINIMUM OF 200 FEET CLEARANCE TO EXISTING SIGNS THAT WILL REMAIN IN PLACE.

BARRICADES THAT MUST BE MOVED FOR A WORK OPERATION SHALL BE IMMEDIATELY RE-ESTABLISHED UPON COMPLETION OF THE OPERATION OR, FOR CONTINUING OPERATIONS, AT THE END OF EACH WORKING DAY.

SIGNS THAT WILL BE IN PLACE LESS THAN 7 CONTINUOUS DAYS AND NIGHTS MAY BE MOUNTED ON PORTABLE SUPPORTS.

ALL TYPE III BARRICADES SHALL HAVE RAILS REFLECTORIZED ON BOTH FACES. STRIPES SHALL BE PROPERLY SLOPED DOWN TOWARD THE TRAFFIC SIDE OR AS SHOWN IN THE ROAD CLOSURE BARRICADE DETAIL D FOR FULL ROAD CLOSURES.

TYPE "A" LOW-INTENSITY FLASHING WARNING LIGHTS SHALL BE VISIBLE ON BOTH SIDES OF THE BARRICADE.

THE R11-2, R11-3, M4-9, R11-4 AND R10-61 SIGNS PLACED ON BARRICADES SHALL COVER NO MORE THAN THE TOP RAIL. THE SIGNS SHALL NOT COVER ANY PORTION OF THE MIDDLE OR BOTTOM RAILS.

THE REFLECTIVE SHEETING USED ON R11-2, R11-3, R11-4, R10-61 AND R1-1 SIGNS SHALL COMPLY WITH SUBSECTION 637.2.2.2 OF THE STANDARD SPECIFICATIONS.

"WO AND "MO" SIGNS ARE THE SAME AS "W" AND "M" SIGNS EXCEPT THE BACKGROUND IS ORANGE.

ALL SIGNS SHALL BE 48" X 48" UNLESS OTHERWISE NOTED BELOW:
- R11-2 SHALL BE 48" X 30".
- R11-3, R11-4 AND R10-61 SHALL BE 60" X 30".
- M4-9 SHALL BE 30" X 24".
- M3-X AND M4-8 SHALL BE 24" X 12". (30" X 15" IF NEEDED TO MATCH EXISTING SIGNS.)
- M1-4, M1-5A, AND M1-6 SHALL BE 24" X 24". (36" X 36" IF NEEDED TO MATCH EXISTING SIGNS.)
- M05-1 AND M06-1 SHALL BE 21" X 21". (30" X 30" IF NEEDED TO MATCH EXISTING SIGNS.)
- D1-X SHALL BE AS SHOWN ON SPECIFIC PROJECT SIGNING DETAIL SHEETS.
- R1-1 SHALL BE 36" X 36".

(1) TWO WARNING LIGHTS SHALL BE PROVIDED ON THE CENTER BARRICADE AND A MINIMUM OF ONE WARNING LIGHT SHALL BE PROVIDED ON EACH OF THE OTHER BARRICADES WITHIN THE ROADWAY LIMITS. SPACING OF THE WARNING LIGHTS SHALL BE UNIFORM TO THE EDGE OF ROADWAY AS SHOWN (APPROX. 8-FOOT LIGHT SPACING).

(2) THESE SIGNS AND BARRICADES ARE NOT REQUIRED IF ROAD CLOSURE BEGINS AT INTERSECTION.

(3) FOR ROAD CLOSURE WITHOUT LOCAL ACCESS TO PROJECT, SEE ROAD CLOSURE BARRICADE DETAIL D.

(4) FOR ROAD CLOSURE WITH LOCAL ACCESS TO PROJECT, SEE LANE CLOSURE BARRICADE DETAIL E.

(5) FOR BRIDGE OR CULVERT REPLACEMENTS, SUBSTITUTE "BRIDGE OUT" INSTEAD OF "ROAD CLOSED" ON R11-2 AND R11-3 SIGNS.

(6) INSTALL DETOUR AND COMMUNITY GUIDE SIGNS AND ARROWS ONLY IF SPECIFIED IN THE CONTRACT. IF THERE ARE EXISTING ROUTE MARKER ASSEMBLIES THAT WILL REMAIN IN PLACE, ADJUST THE LOCATION OF THE DETOUR ROUTE SIGNS TO CORRESPOND WITH THE EXISTING ASSEMBLIES. MODIFY EXISTING SIGNS WHERE POSSIBLE. SEE SPECIFIC PROJECT DETOUR SIGNING DETAIL SHEETS. IF DETOUR SIGNS ARE BEING INSTALLED BY OTHERS, PLACE THE CONTRACTED TRAFFIC CONTROL SIGNS TO ALLOW FOR PLACEMENT OF ALL WARNING, DETOUR AND GUIDE SIGNS AS SHOWN.

(7) "EAST" CARDINAL DIRECTION MARKERS AND RIGHT TURN ARROWS ARE SHOWN. USE OTHER CARDINAL DIRECTIONS AND ARROWS AS APPROPRIATE.

BARRICADES AND SIGNS FOR MAINLINE CLOSURES

STATE OF WISCONSIN
DEPARTMENT OF TRANSPORTATION

APPROVED

9/16/03
DATE

/S/ Thomas N. N[illegible]
CHIEF SIGNS AND MAR[illegible]INEER

FHWA

THIS DRAWING PROVIDES GENERAL GUIDANCE ON TYPICAL DETOUR SIGN LAYOUT AND SPACING. SEE PROJECT DETOUR SIGNING SHEETS FOR SPECIFIC DETAILS FOR EACH PROJECT.

GENERAL NOTES

THE EXACT NUMBER, LOCATION AND SPACING OF ALL SIGNS SHALL BE ADJUSTED TO FIT FIELD CONDITIONS AS APPROVED BY THE ENGINEER.

IF THERE ARE EXISTING ROUTE MARKER ASSEMBLIES THAT WILL REMAIN IN PLACE, ADJUST THE LOCATION OF THE DETOUR ROUTE SIGNS TO CORRESPOND WITH THE EXISTING ASSEMBLIES. SEE SPECIFIC PROJECT DETOUR SIGNING DETAIL SHEETS. MODIFY EXISTING SIGNS WHERE POSSIBLE.

THE SPACING BETWEEN TRAFFIC CONTROL AND DETOUR SIGNS SHOULD BE ADJUSTED TO NOT CONFLICT WITH AND TO PROVIDE A DESIRABLE MINIMUM OF 200 FEET CLEARANCE TO EXISTING SIGNS THAT WILL REMAIN IN PLACE.

ANY SIGNS TEMPORARY OR EXISTING, WHICH CONFLICT WITH TRAFFIC CONTROL "IN USE", SHALL BE REMOVED OR COVERED AS NEEDED AND AS APPROVED BY THE ENGINEER.

SIGNS THAT WILL BE IN PLACE LESS THAN 7 CONTINUOUS DAYS AND NIGHTS MAY BE MOUNTED ON PORTABLE SUPPORTS.

"MO" SIGNS ARE THE SAME AS "M" SIGNS EXCEPT THE BACKGROUND IS ORANGE.

SIGN SIZES SHALL BE AS FOLLOWS:

M3-X AND M4-8 SHALL BE 24" X 12". (30" X 15" IF NEEDED TO MATCH EXISTING SIGNS.)
M1-4, M1-5A, AND M1-6 SHALL BE 24" X 24". (36" X 36" IF NEEDED TO MATCH EXISTING SIGNS.)
M05-1 AND M06-1 SHALL BE 21" X 21". (30" X 30" IF NEEDED TO MATCH EXISTING SIGNS.)
M4-9 SHALL BE 30" X 24".
M4-8a SHALL BE 24" X 18".
G20-51 SHALL BE 60" X 24".
W20-2 SHALL BE 48" X 48".
D1-X SHALL BE AS SHOWN ON SPECIFIC PROJECT SIGNING DETAIL SHEETS.

* OPTIONAL SIGNS. SEE SPECIFIC PROJECT DETOUR SIGNING DETAIL SHEETS.

** FOR A TOWN ROAD OR LOCAL STREET DETOURED ONTO A STATE TRUNK HIGHWAY, PLACE A ROAD NAME PLAQUE ABOVE THE M4-9 SIGN AS SPECIFIED IN THE CONTRACT.

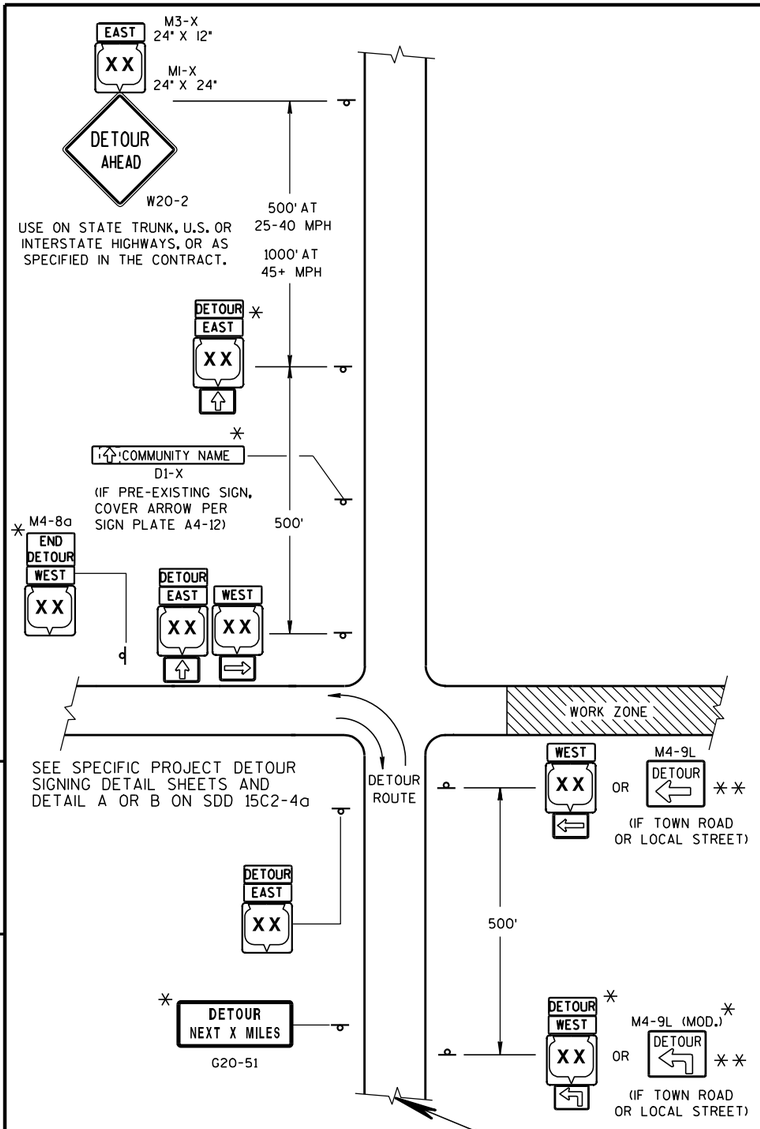

MATCH POINT

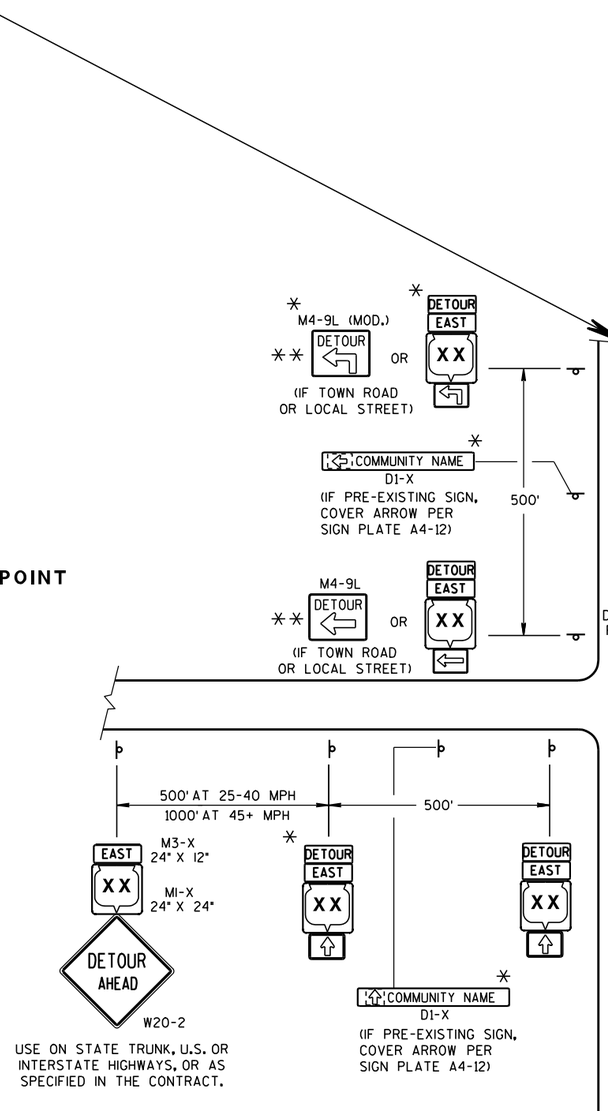

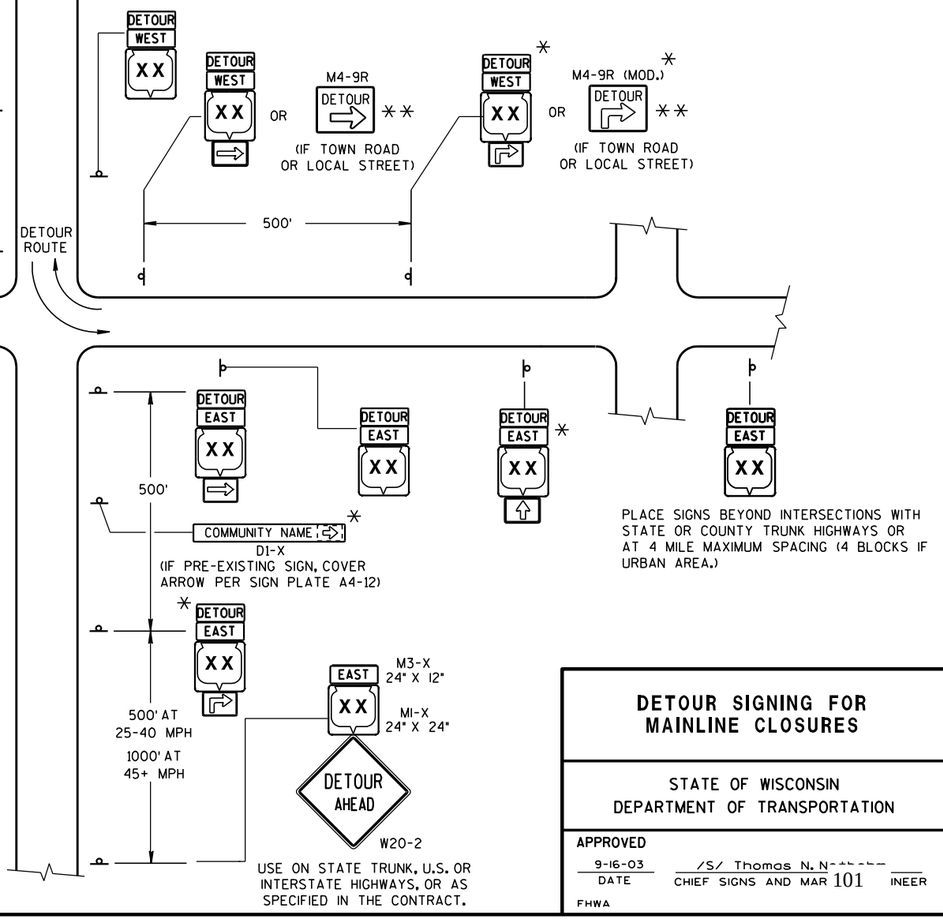

LEGEND

- POST MOUNTED SIGN
- WORK ZONE
- DETOUR EAST — M4-8 / M3-X
- XX OR COUNTY XX OR XX — M1-4 / M1-5A / M1-6
- MO5-1 OR MO6-1 OR MO6-1

DETAIL F

DETOUR SIGNING

DETOUR SIGNING FOR MAINLINE CLOSURES

STATE OF WISCONSIN
DEPARTMENT OF TRANSPORTATION

APPROVED
9-16-03 DATE
/S/ Thomas N. [illegible] CHIEF SIGNS AND MAR[illegible]INEER
FHWA

S.D.D. 15 C 2-4c

6

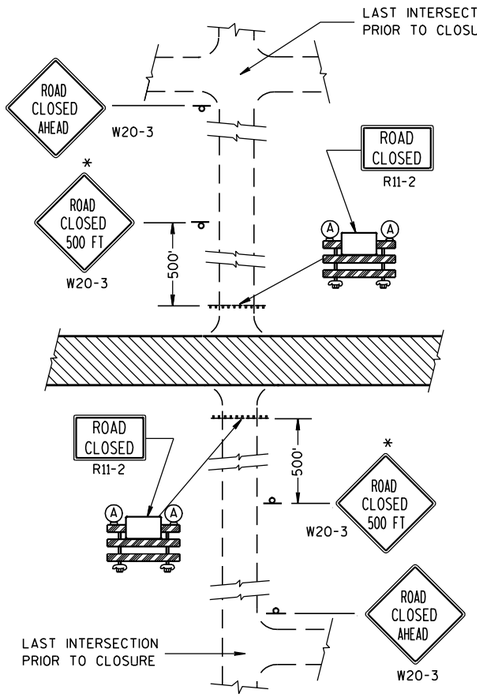

DETAIL 1

(NO ACCESS TO PROJECT)

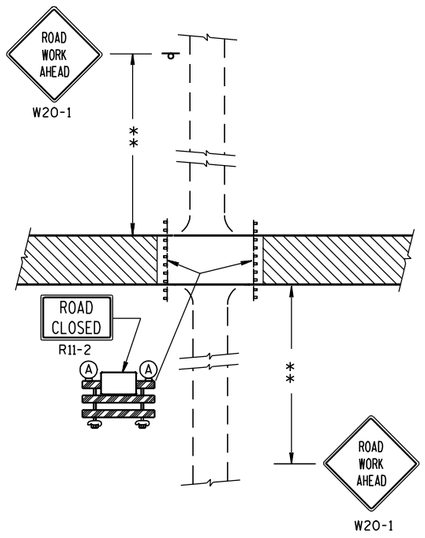

DETAIL 2

(PUBLIC CROSS-TRAFFIC MAINTAINED. NO ACCESS TO PROJECT).

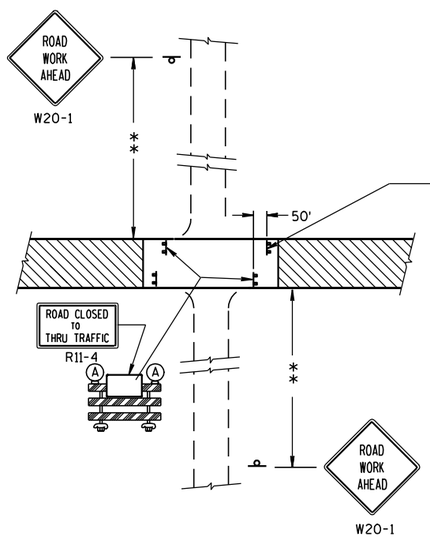

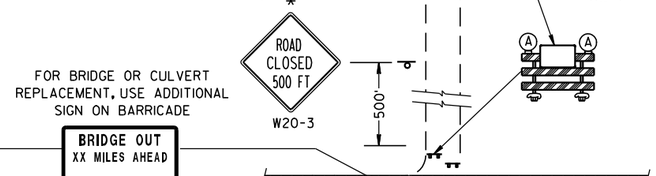

DETAIL 3

(PUBLIC CROSS-TRAFFIC MAINTAINED. CONTRACTOR, LOCAL BUSINESS AND RESIDENT ACCESS).

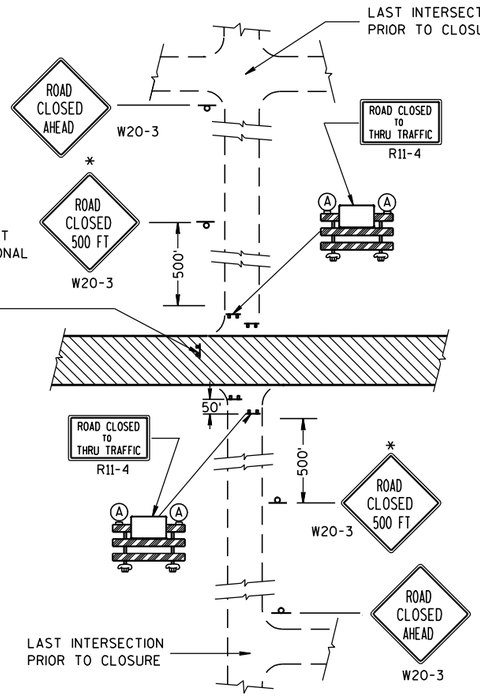

DETAIL 4

(CONTRACTOR, LOCAL BUSINESS AND RESIDENT ACCESS TO PROJECT)

GENERAL NOTES

THE EXACT NUMBER, LOCATION, AND SPACING OF ALL SIGNS AND BARRICADES SHALL BE ADJUSTED TO FIT FIELD CONDITIONS AS APPROVED BY THE ENGINEER.

ANY SIGNS TEMPORARY OR EXISTING, WHICH CONFLICT WITH TRAFFIC CONTROL "IN USE" SHALL BE REMOVED OR COVERED AS NEEDED AND AS APPROVED BY THE ENGINEER.

THE SPACING BETWEEN TRAFFIC CONTROL SIGNS SHOULD BE ADJUSTED TO NOT CONFLICT WITH AND SHOULD PROVIDE A DESIRABLE MINIMUM OF 200 FEET CLEARANCE TO EXISTING SIGNS THAT WILL REMAIN IN PLACE.

IF A "STOP" SIGN MUST BE REMOVED FOR A WORK OPERATION, A TEMPORARY "STOP" SIGN SHALL BE PLACED PRIOR TO THE SIGN REMOVAL, OR A FLAGGER SHALL BE PROVIDED UNTIL THE SIGN IS RE-ESTABLISHED.

BARRICADES THAT MUST BE MOVED FOR A WORK OPERATION SHALL BE IMMEDIATELY RE-ESTABLISHED UPON COMPLETION OF THE OPERATION OR, FOR CONTINUING OPERATIONS, AT THE END OF EACH WORKING DAY.

SIGNS THAT WILL BE IN PLACE LESS THAN 7 CONTINUOUS DAYS AND NIGHTS MAY BE MOUNTED ON PORTABLE SUPPORTS.

ALL TYPE III BARRICADES SHALL HAVE RAILS REFLECTORIZED ON BOTH FACES. STRIPES SHALL BE PROPERLY SLOPED DOWN TOWARD THE TRAFFIC SIDE OR AS SHOWN IN THE ROAD CLOSURE BARRICADE DETAIL D FOR FULL ROAD CLOSURES.

TYPE "A" LOW-INTENSITY FLASHING WARNING LIGHTS SHALL BE VISIBLE ON BOTH SIDES OF THE BARRICADE.

THE R11-2, R11-3 AND R11-4 SIGNS PLACED ON BARRICADES SHALL COVER NO MORE THAN THE TOP RAIL. THE SIGNS SHALL NOT COVER ANY PORTION OF THE MIDDLE OR BOTTOM RAILS.

THE REFLECTIVE SHEETING USED ON R11-2, R11-3 AND R11-4 SIGNS SHALL COMPLY WITH SUBSECTION 637.2.2.2 OF THE STANDARD SPECIFICATIONS.

ALL SIGNS SHALL BE 48" X 48" UNLESS OTHERWISE NOTED BELOW:
R11-2 SHALL BE 48" X 30".
R11-4 AND R11-3 SHALL BE 60" X 30".

*OMIT THE "ROAD CLOSED 500 FT." SIGN IF THE LAST INTERSECTION IS 500 FT. OR LESS FROM THE WORK ZONE.

**500' MAX. OR AT LAST INTERSECTION WHICHEVER IS CLOSER.

LEGEND

- POST MOUNTED WARNING SIGN
- TYPE III BARRICADES
- (A) TYPE "A" LOW INTENSITY FLASHING WARNING LIGHT (FOR NIGHT USE)
- WORK AREA

BARRICADES AND SIGNS FOR SIDEROAD CLOSURES

STATE OF WISCONSIN
DEPARTMENT OF TRANSPORTATION

APPROVED

9-16-03 DATE

/S/ Thomas N. N[illegible] CHIEF SIGNS AND MAR[illegible] INEER

FHWA

6

S.D.D. 15 C 3-1

6

S.D.D. 15 C 3-1

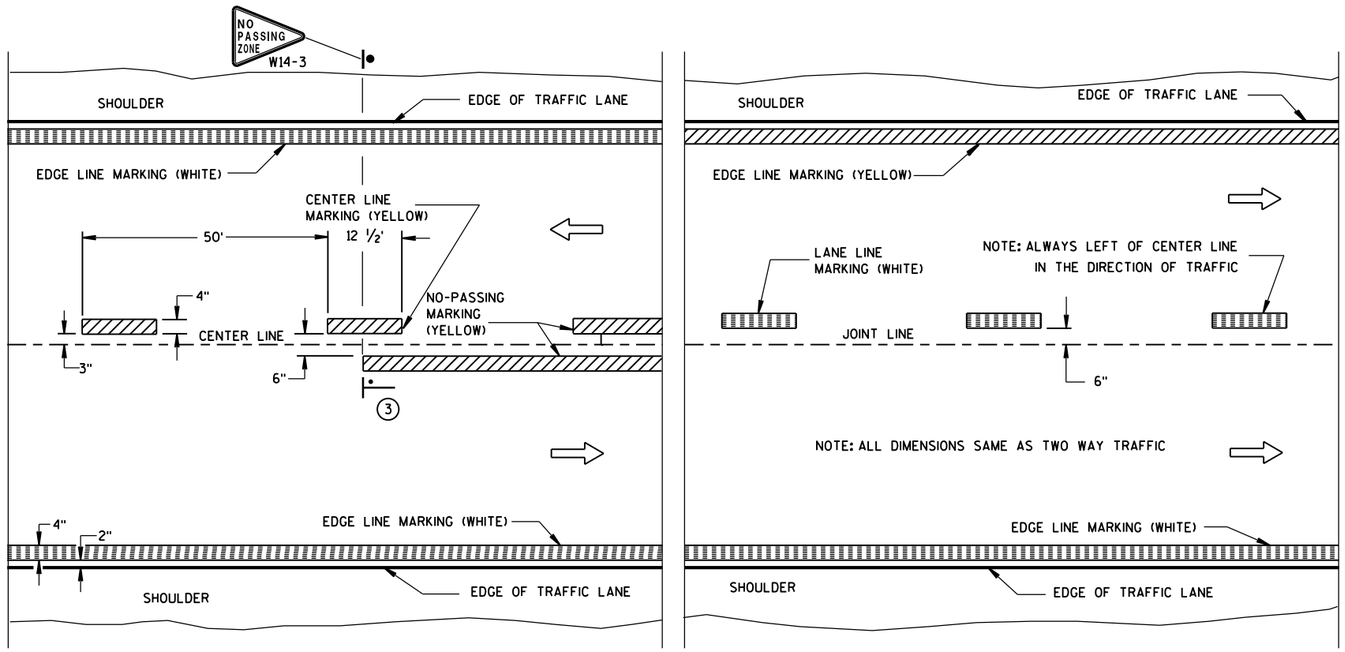

TWO WAY TRAFFIC

ONE WAY TRAFFIC

PERMANENT PAVEMENT MARKING

GENERAL NOTES

DETAILS OF CONSTRUCTION NOT SHOWN ON THIS DRAWING SHALL CONFORM TO STANDARD SPECIFICATIONS AND SPECIAL PROVISIONS.

1. HALF CYCLE LENGTHS (25'±) WITH 2' MINIMUM STRIPE LENGTHS SHALL BE PROVIDED ON ROADWAYS (INCLUDING TEMPORARY TRAVELED WAYS) WITH REVERSE CURVATURE, CURVATURE OF OVER 5 DEGREES OR WHEN DIRECTED BY THE ENGINEER TO MARK UNUSUAL ALIGNMENT OF THE TRAVELED WAY.
2. NO PASSING ZONE TEMPORARY PAVEMENT MARKING IS REQUIRED TO BE PLACED, WHERE APPROPRIATE, ALONG WITH CENTERLINE TEMPORARY PAVEMENT MARKING WHEN A SAME DAY PERMANENT PAVEMENT MARKING ITEM IS INCLUDED IN THE CONTRACT.
3. NO PASSING ZONE MARKINGS ARE PLACED ACCORDING TO "T" MARKINGS. IF EXISTING NO PASSING ZONE W14-3 SIGNS ARE BEYOND 50 FEET IN EITHER DIRECTION, THE SIGNS SHALL BE MOVED TO THE "T" MARKINGS.
4. CONCRETE ONLY.

NOTE

ARROW SYMBOL (⇨) SHOWS DIRECTION OF TRAVEL

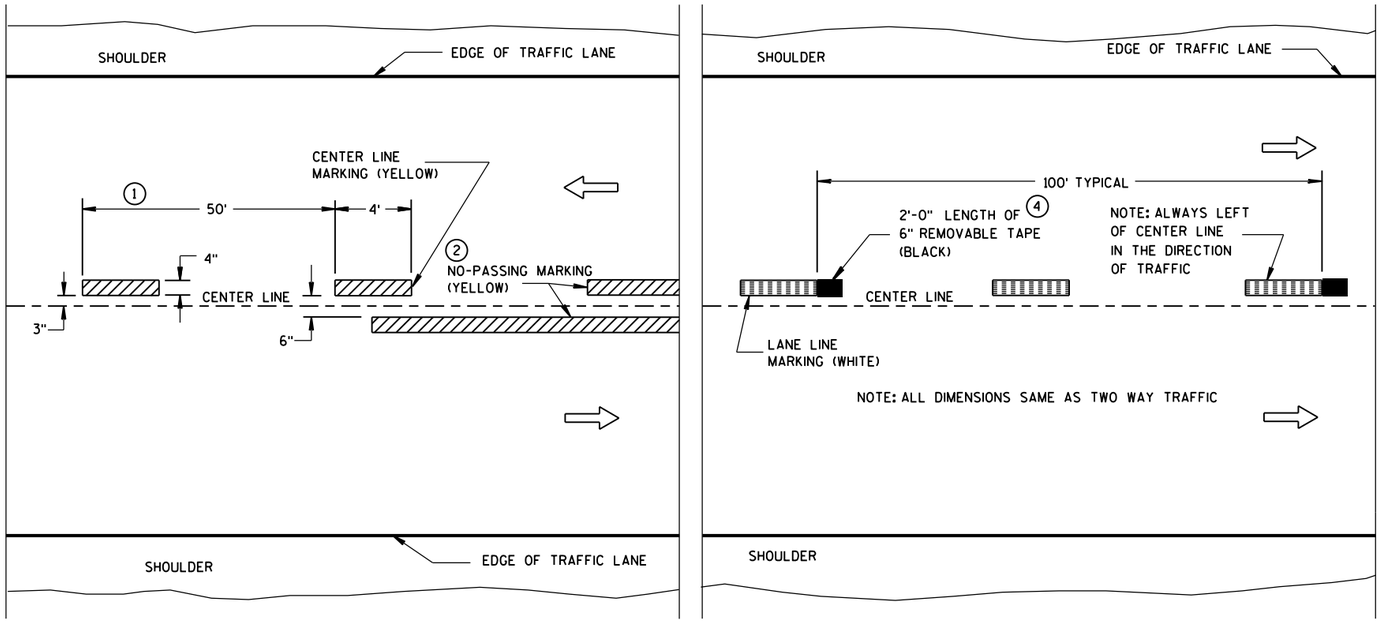

TWO WAY TRAFFIC

ONE WAY TRAFFIC

TEMPORARY (INTERMEDIATE) PAVEMENT MARKING

(SHOWS CYCLE FOR TEMPORARY CENTER LINE OR TEMPORARY LANE LINE MARKING)

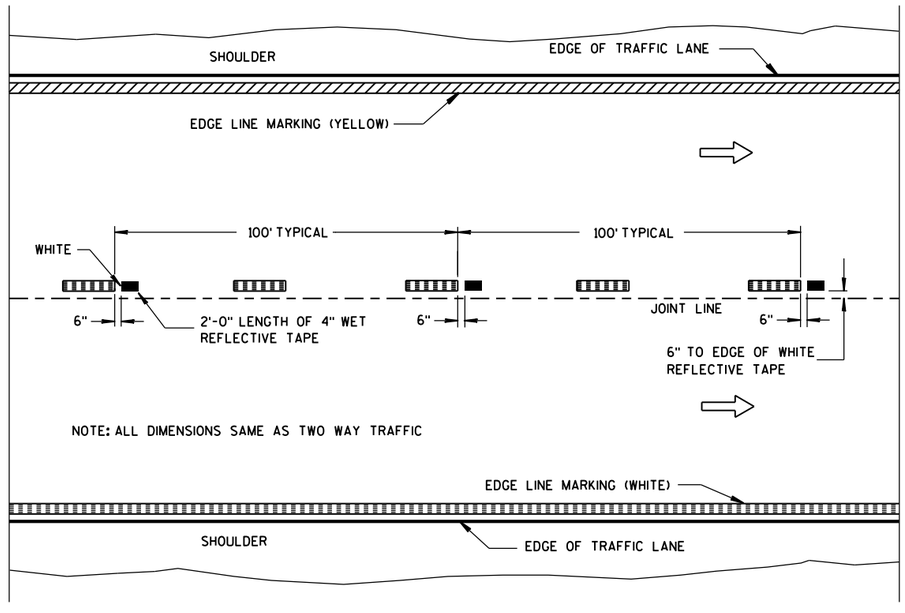

WET REFLECTIVE TAPE SUPPLEMENT TO
SPRAYED OR NON WET REFLECTIVE TAPE LANE LINE

LEGEND

"T" MARKING

POST MOUNTED SIGN

PAVEMENT MARKING (MAINLINE)

STATE OF WISCONSIN
DEPARTMENT OF TRANSPORTATION

APPROVED
10-1-2012 — DATE
/S/ Travis Feltes — STATE TRAFFIC ENGINEER
FHWA

6

S.D.D. 15 C 8-15a

6

S.D.D. 15 C 8-15a

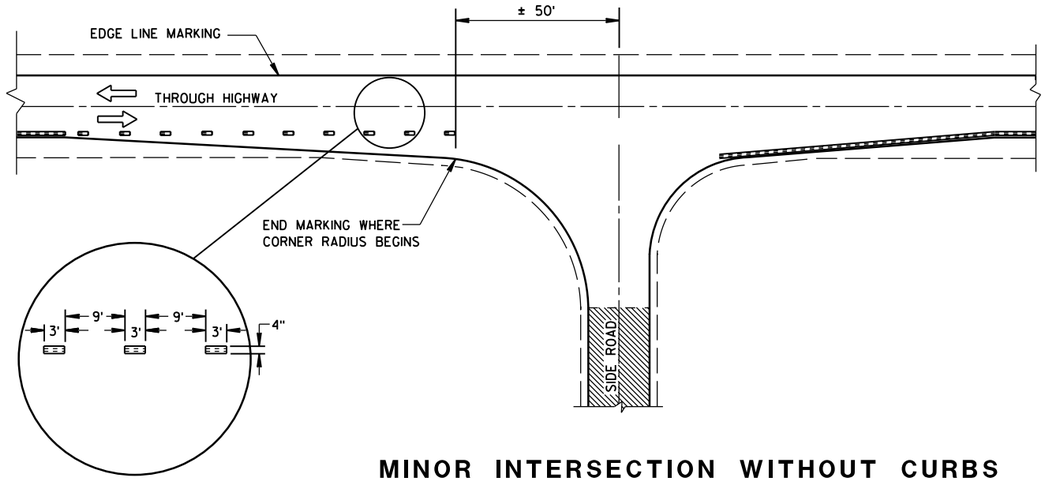

MINOR INTERSECTION WITHOUT CURBS

GENERAL NOTES

EDGE LINES SHALL BE OMITTED THROUGH INTERSECTIONS. EDGE LINES SHALL BE CONTINUED THROUGH DRIVEWAYS.

(1) WHEN DISTANCE "A" IS LESS THAN 250 FEET, OMIT LANE LINE.

(2) WHEN DISTANCE "B" IS LESS THAN 100 FEET, OMIT CHANNELIZING LANE LINE.

(3) ALTERNATIVE MARKING SHALL BE PROVIDED WHEN SPECIFIED IN THE CONTRACT. TYPICAL SITUATIONS WHERE THIS MARKING MAY BE REQUIRED ARE WHERE THE INTERSECTION IS ON A SHARP HORIZONTAL CURVE OR CREST VERTICAL CURVE IN AN UNLIGHTED AREA SUCH THAT THE EDGE LINE MAY BE MISLEADING TO THE MOTORIST OR DISAPPEAR FROM SIGHT.

(4) THE EDGE LINE IN THE TAPER AREAS OF THE BYPASS LANE AND THE BYPASS LANE SHALL BE LOCATED 1-FOOT FROM EDGE OF PAVEMENT TO THE OUTSIDE EDGE OF EDGE LINE.

(5) BARRIER LINE ENDS AT SIDE ROAD PAVEMENT/SURFACE EDGE EXTENSION.

(6) BARRIER LINE STARTS 500 FEET PRIOR TO THE BYPASS TAPER.

(7) IF THE DISTANCE BETWEEN 2 SUCCESSIVE NO-PASSING ZONES IS LESS THAN THE MINIMUM DISTANCE BETWEEN ZONES, CONNECT THE 2 ZONES.

(8) 3' LINE 9' GAP, EXCEPT RETRACE THE EXISTING LINE - GAP PATTERN WHERE EXISTING MARKINGS ARE IN PLACE.

ARROW SYMBOL (⇨) SHOWS DIRECTION OF TRAVEL

(7)

POSTED SPEED (MPH)	MINIMUM DISTANCE BETWEEN ZONES (FEET)
25 - 30	528
35 - 40	528
45 - 50	686
55	792

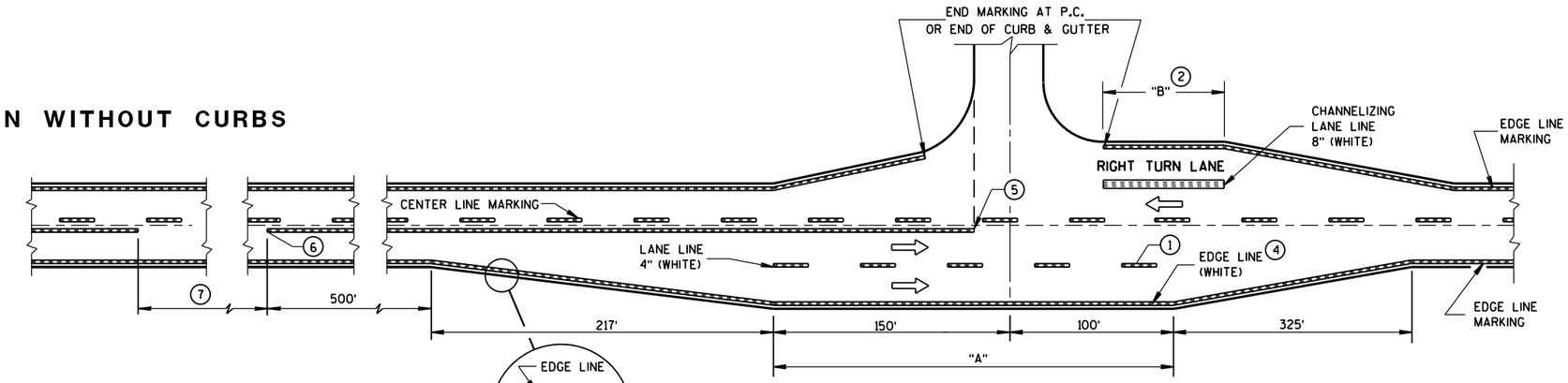

MAJOR INTERSECTIONS

(INTERSECTION WITH FULL RIGHT TURN LANE OR BYPASS LANES)

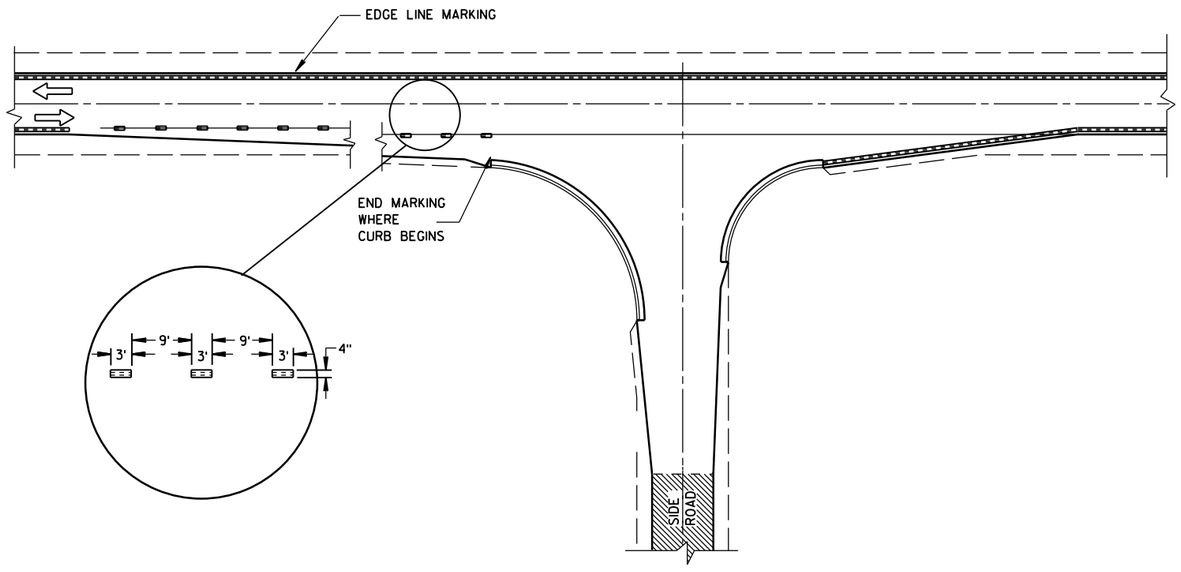

MINOR INTERSECTION WITH CURBS

(TYPICAL MARKING)

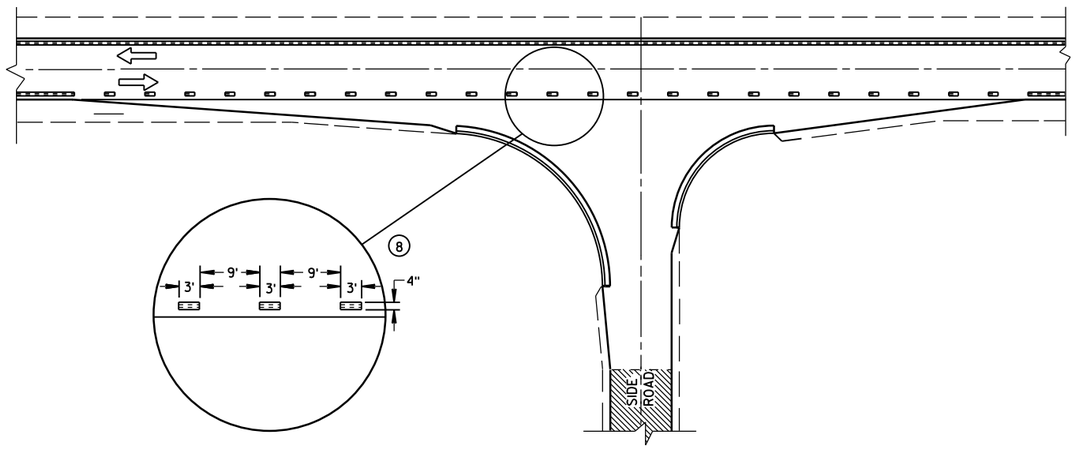

MINOR INTERSECTION WITH CURBS

(3) (FOR SPECIAL CONDITIONS AS SPECIFIED)

PAVEMENT MARKING
(INTERSECTIONS)

STATE OF WISCONSIN
DEPARTMENT OF TRANSPOR

6

S.D.D. 15 C 8-15b

6

S.D.D. 15 C 8-15b

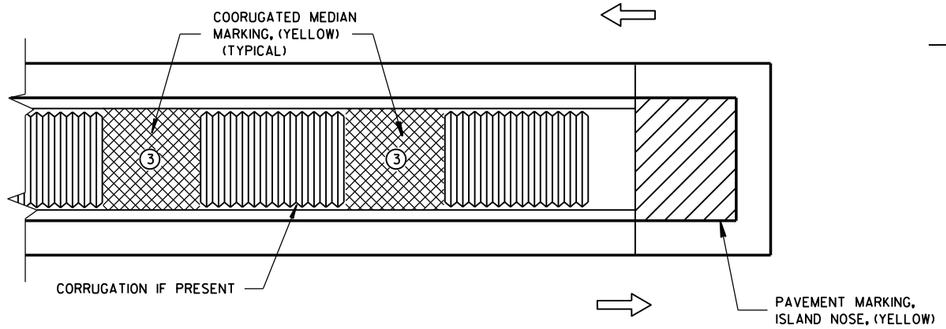

MEDIAN ISLAND WITH SQUARE BLUNT NOSE

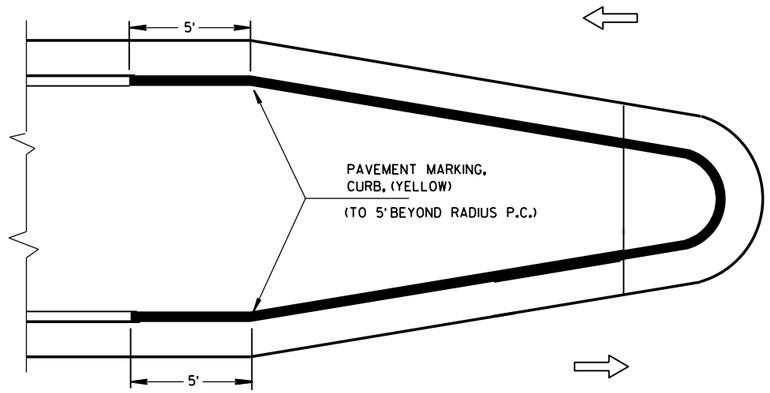

MEDIAN ISLAND WITH ROUND BLUNT NOSE

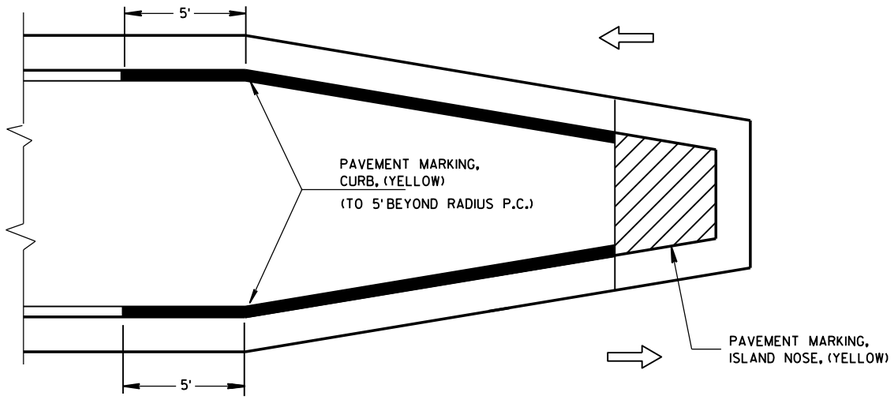

MEDIAN ISLAND WITH SLOPED NOSE

TYPICAL PLACEMENT OF PAVEMENT MARKING ON MEDIAN ISLANDS

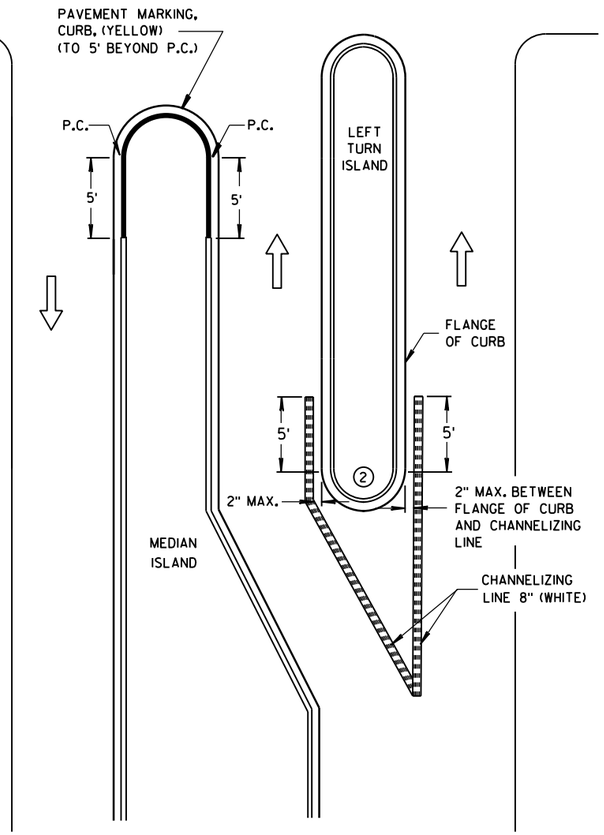

LEFT TURN & MEDIAN ISLAND

GENERAL NOTES

1. STOP LINE IS REQUIRED ONLY WHEN SPECIFIED IN THE CONTRACT.
2. DO NOT MARK CURB NOSES THAT SEPARATE LANES OF TRAFFIC TRAVELING IN THE SAME DIRECTION.
3. WHEN CONCRETE CORRUGATED MEDIAN IS CONSTRUCTED TO SEPARATE TRAFFIC OPERATING IN THE OPPOSING DIRECTION YELLOW PAVEMENT MARKING SHALL BE APPLIED TO THE FLAT PORTION OF THE CONCRETE CORRUGATED MEDIAN. THE ITEM OF PAVEMENT MARKING, CONCRETE CORRUGATED MEDIAN, WILL BE MEASURED IN PLACE AND AND ACCEPTED IN ACCORDANCE WITH THE CONTRACT AND PAID FOR AT THE CONTRACT UNIT PRICE PER SQUARE FOOT.

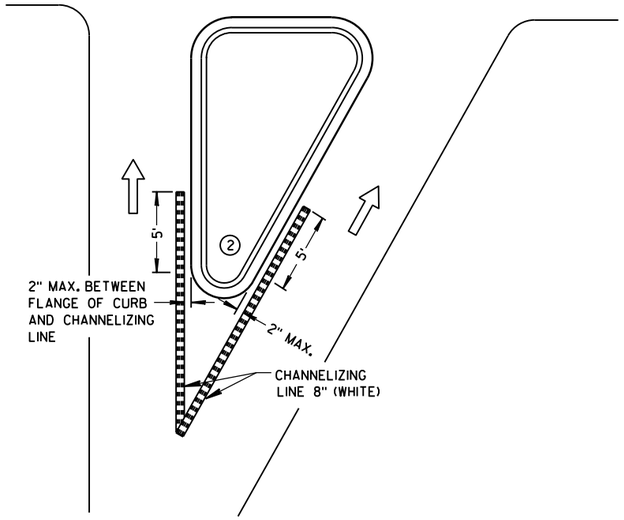

RIGHT TURN ISLAND

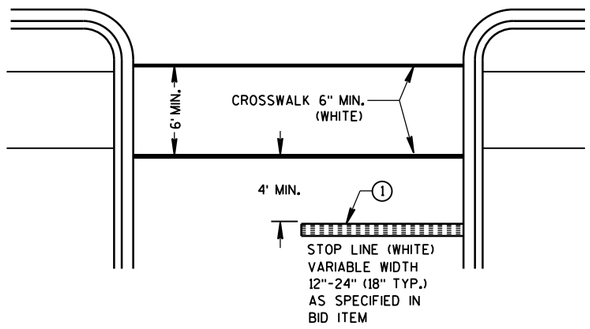

STOP LINE AND CROSSWALK

LEGEND

- ISLAND NOSE MARKING
- CURB MARKING
- CORRUGATED MEDIAN MARKING
- DIRECTION OF TRAVEL

PAVEMENT MARKING (ISLANDS, STOP LINE & CROSS WALK)

STATE OF WISCONSIN
DEPARTMENT OF TRANSPOI

6

S.D.D. 15 C 8-15f

6

S.D.D. 15 C 8-15f

TYPICAL ASSEMBLIES

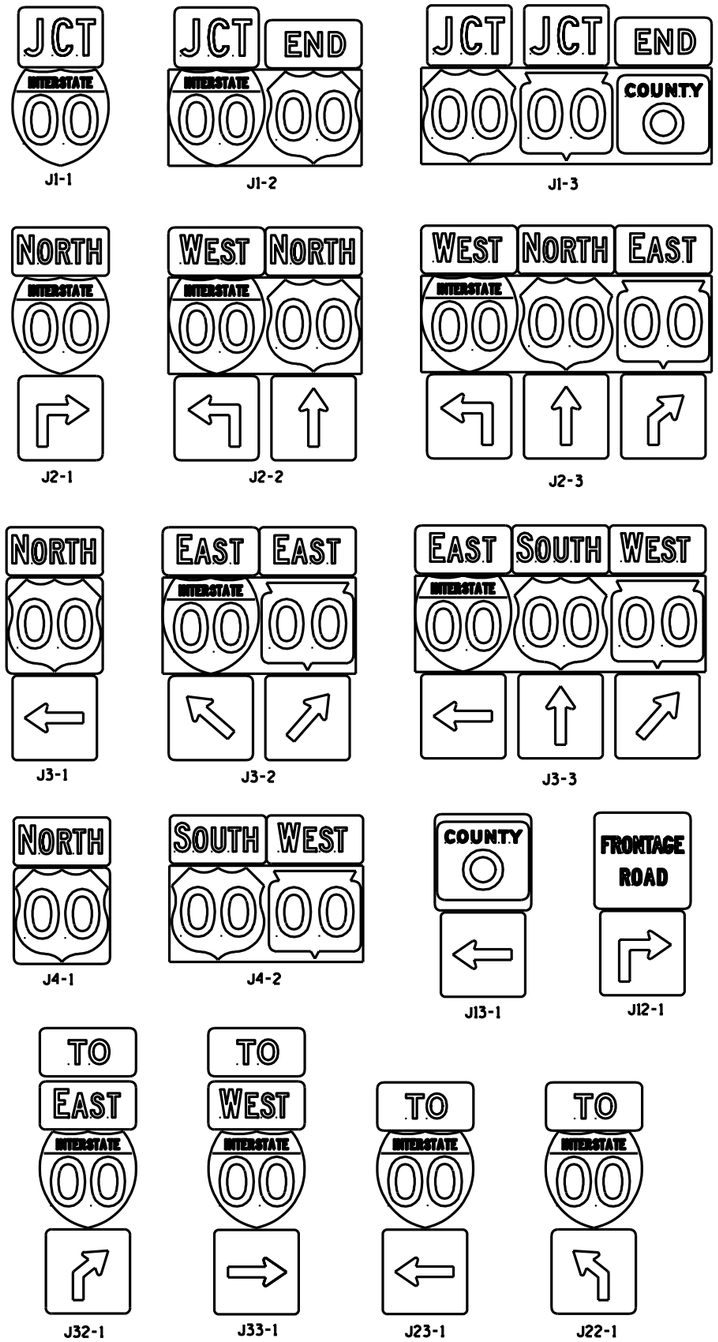

INDIVIDUAL COMPONENTS OF ASSEMBLIES

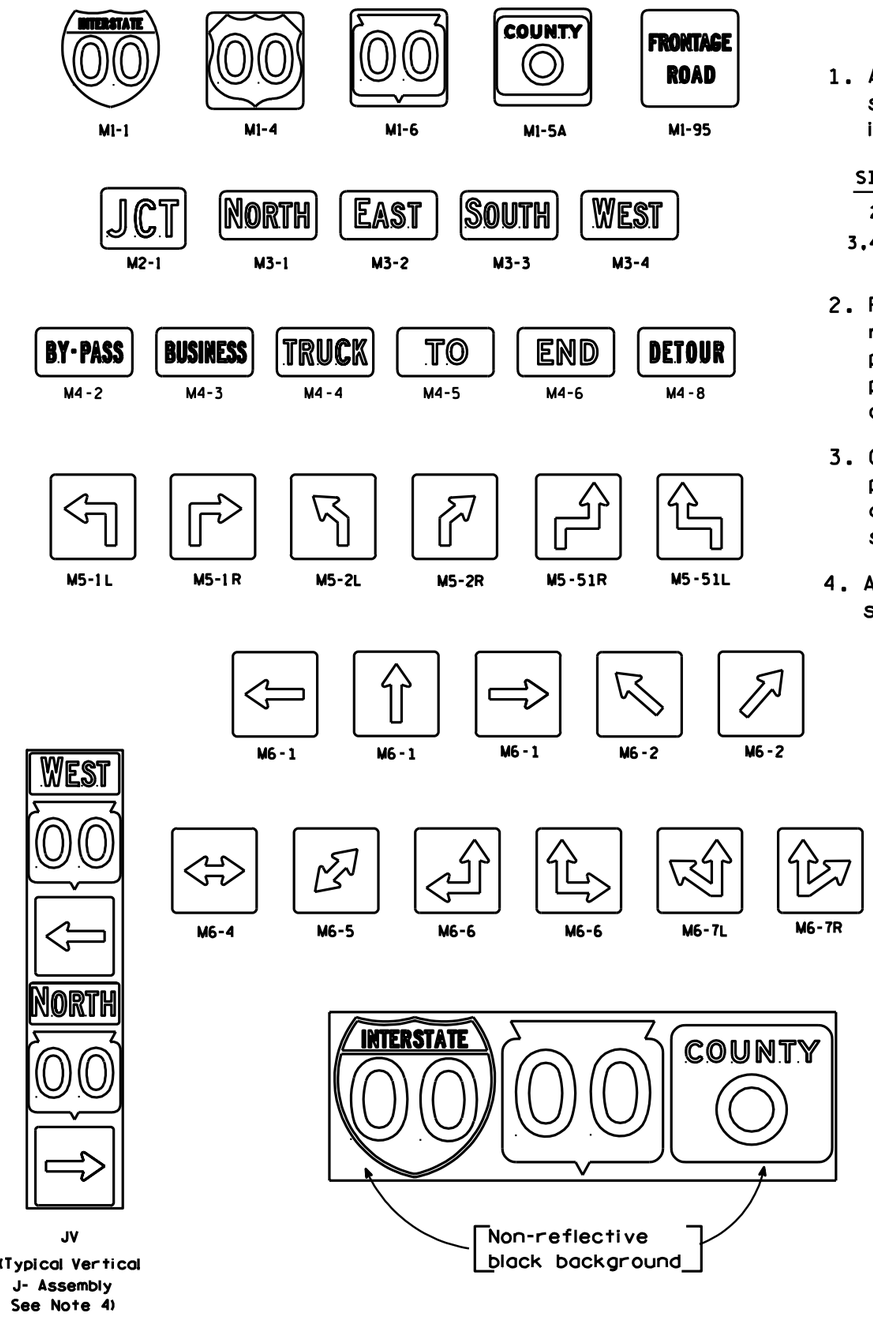

GENERAL NOTES

1. All components within any individual assembly shall be the same "size". The following table illustrates that situation:

SIZE	M1'S	M2	M3'S & M4'S	M5'S & M6'S
2	24 X 24	21 X 15	24 X 12	21 X 21
3,4-5	36 X 36	30 X 21	30 X 15	30 X 30

2. For any assembly containing two or more route markers, the route markers SHALL be placed on a single high density overlay PLYWOOD panel. All other materials within the assembly can be either plywood or aluminum.

3. Certain marker heads require the component pieces to be the same color. As an example, all the components used with an M1-1 marker shall be blue.

4. All vertical J assemblies are given a sign code of JV.

ROUTE MARKERS & COMPONENTS
IN TYPICAL ASSEMBLIES

WISCONSIN DEPT OF TRANSPORTATION

APPROVED Chester J Spang
for State Traffic Engineer

DATE 3/06/00 A2-1.6

PROJECT NO:	HWY:	COUNTY:		SHEET NO: 106	E

TYPICAL ASSEMBLIES

J1-1

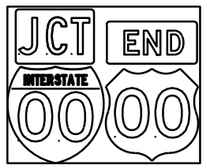

J1-2

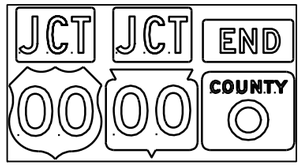

J1-3

J2-1

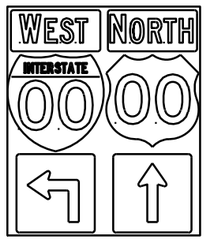

J2-2

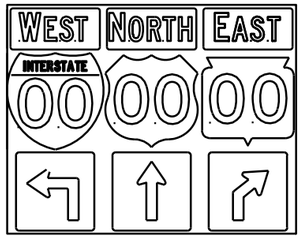

J2-3

JV

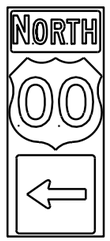

J3-1

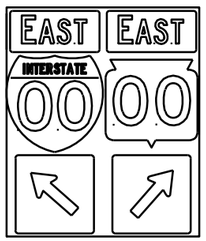

J3-2

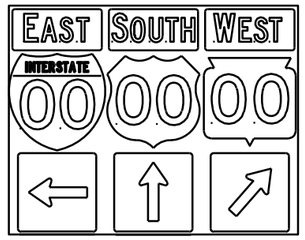

J3-3

J4-1

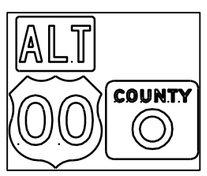

J4-2

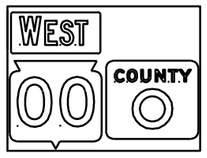

J4-2

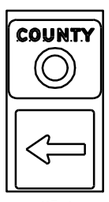

J13-1

J12-1

J32-1

J33-1

J23-1

J22-1

NOTES

1. Signs are Type II - Type H Reflective - reference WIS DOT Standard Specification for HIGHWAY and STRUCTURE CONSTRUCTION latest edition.
2. Color:
   Background - Black Non-reflective
   Message - see Note 5
3. Message Series - See Note 5
4. Corners shall be square since base material is plywood.
5. The colors and message spacing on each marker shall be according to the applicable route marker panel specifications.
6. Certain marker heads require the component pieces to be the same color. As an example, all the components used with an M1-1 Interstate marker shall be blue.
7. Single panel j-assemblies shall only be used with route marker shields that are same size. If the route marker shields are different size use multiple piece component.
8. Route assemblies that have 24 inch route shields and have dimensions greater than 48 inches (both vertical and horizontal) shall have one horizontal splice between the arrows and route shields. Vertical splices shall not be used on route assemblies with a horizontal dimension of 144 inches or less. The contractor shall not use more than one vertical joint per sign and the joint shall be between route shields.
9. Route assemblies that have 36 inch shields and have dimensions greater than 48 inchs (both vertical and horizontal) shall have two horizontal splices. One horizontal splice shall be between the cardinal direction and route shields and the other horizontal splice shall be between the arrows and route shields. Vertical splices shall not be used on route assemblies with a horizontal dimension of 144 or less. The contractor shall not use more than one vertical joint per sign and the joint shall be between route shields.

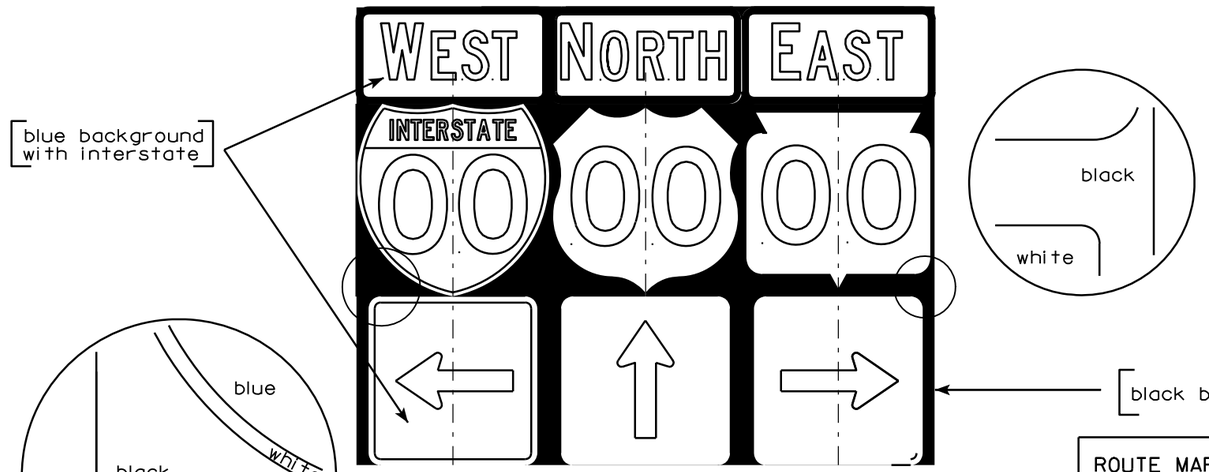

ROUTE MARKERS & COMPONENTS IN TYPICAL ASSEMBLIES

WISCONSIN DEPT OF TRANSPORTATION

APPROVED Matthew R Rauch for State Traffic Engineer

DATE 10/21/09 PLATE NO. A2-1S.6

PROJECT NO:

SHEET NO: 107 E

FILE NAME : C:\Users\PROJECTS\tr_stdplate\A21S.DGN PLOT DATE : 21-OCT-2009 09:27 PLOT BY : ditjph PLOT NAME :

WISDOT/CADDS SHEET 42

7

7

URBAN AREA

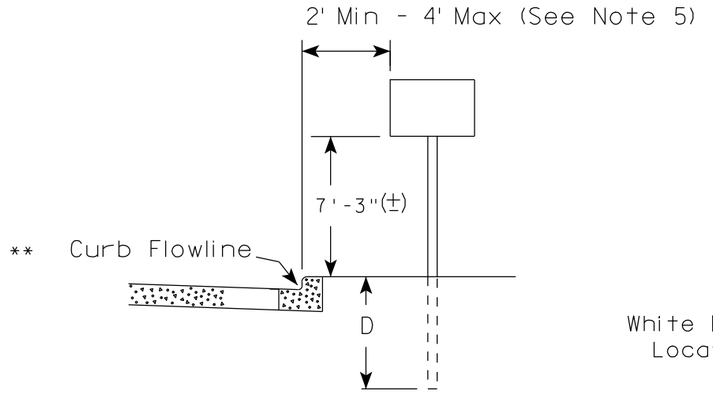

RURAL AREA (See Note 2)

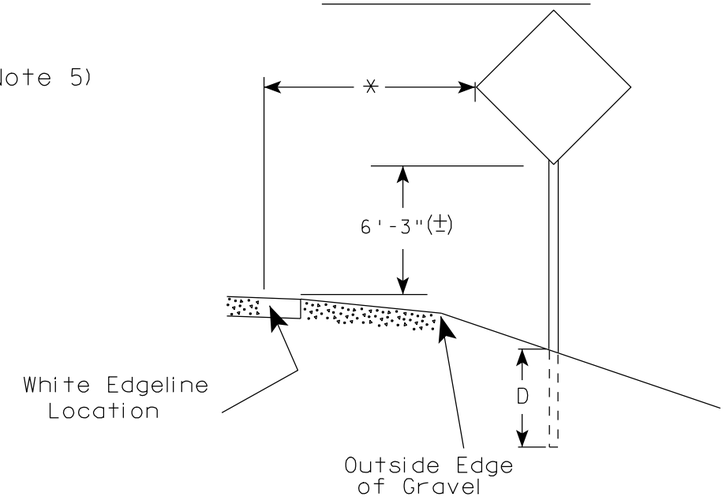

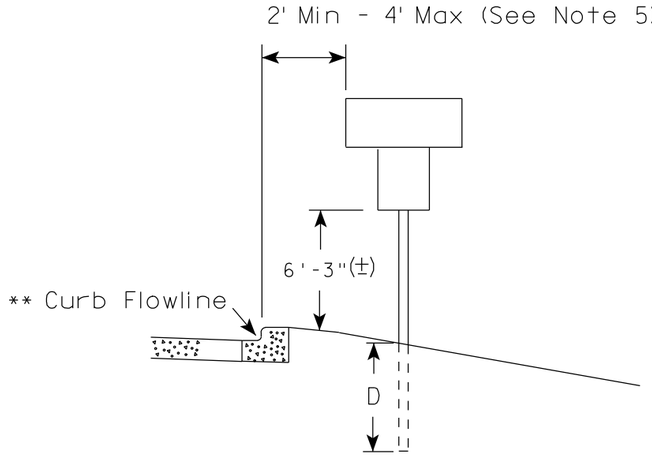

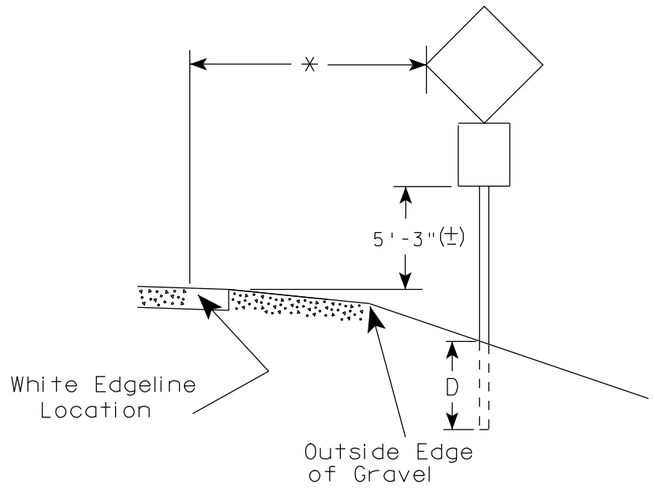

** The existence of curb and gutter does not in itself mandate the vertical clearance illustrated. That height is typically measured where there is sidewalk adjacent to the roadway or parking is permitted. In the absence of sidewalk vertical clearance is measured from the top of the curb. Offset of signs is measured from the flow line.

* 6 feet from edge of a paved shoulder or 12 feet from the edge of pavement (edge line location) or 2 feet from outside edge of gravel, whichever is greater unless directed by project engineer.

GENERAL NOTES

1. Signs wider than 4 feet or larger than 20 sq. ft. shall be mounted on multiple posts. Refer to plate A4-4.
2. If signs are mounted on barrier wall, see A4-10 sign plate.
3. For expressways and freeways, mounting height is 7'- 3" (±) or 6'-3" (±) depending upon existence of a sub-sign.
4. Minimum mounting height for J assemblies (A4-5) is 7'-3" (±) or 6'-3" (±) per urban or rural detail respectively.
5. Minimum mounting height for signs mounted on traffic signal poles is 5'- 3" (±).
6. Offset distance shall be consistent with existing signs or consistent throughout length of project.
7. The (±) tolerance for mounting height is 3 inches.
8. Folding stop signs (R1-1F) shall be mounted at a height of 5'-3" (±) or as directed by the Engineer.
9. The Double Arrow sign (W12-1) shall be mounted at a height of 2'-3" (±). The Chevron sign (W1-8), Roundabout Chevron panel (R6-4B), Clearance Markers (W5-52), Mile Markers (D10 series) & End of Road Markers (W5-56 & W5-56A) shall be mounted at a height of 4'-3" (±).

POST EMBEDMENT DEPTH

Area of Sign Installation (Sq. Ft.)	D (Min)
20 or Less	4'
Greater than 20	5'

TYPICAL INSTALLATION OF PERMANENT TYPE II SIGNS ON SINGLE POSTS

WISCONSIN DEPT OF TRANSPORTATION

APPROVED Matthew R Rauch for State Traffic Engineer

DATE 9/21/2011 PLATE NO. A4-3.16

7

7

PROJECT NO: | HWY: | COUNTY: | SHEET NO: 108 | E

URBAN AREA

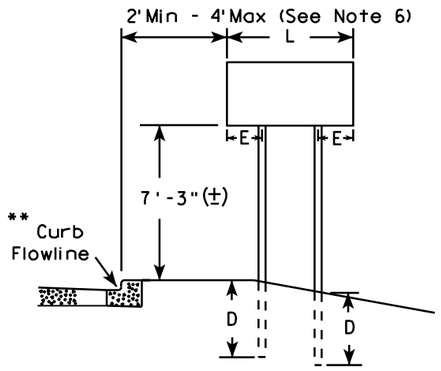

RURAL AREA (See Note 3)

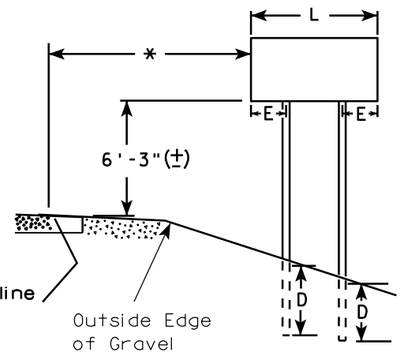

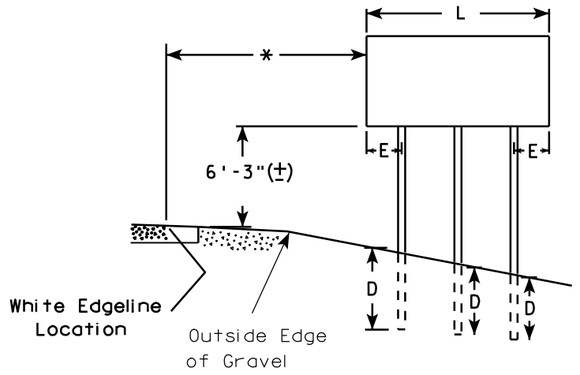

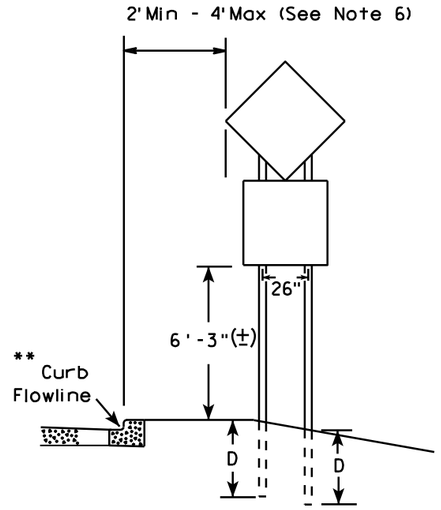

48" DIAMOND WARNING SIGN

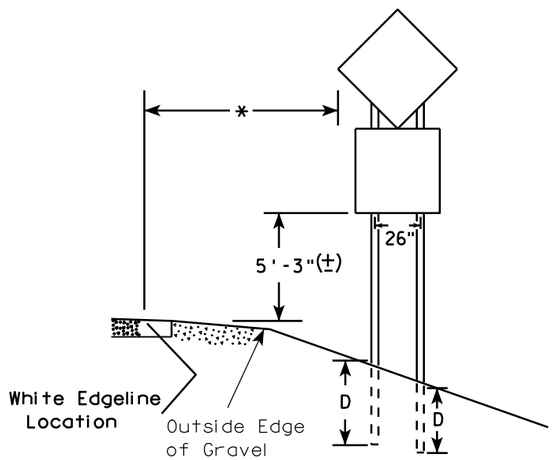

48" DIAMOND WARNING SIGN

SIGN SHAPE OTHER THAN DIAMOND (TWO POSTS REQUIRED)	
L	E
Greater than 48" Less than 60"	12"
60" to 120"	L/5

***

SIGN SHAPE OTHER THAN DIAMOND (THREE POSTS REQUIRED)	
L	E
Greater than 120" less than 168"	12"

SIGN SHAPE OTHER THAN DIAMOND (FOUR POSTS REQUIRED)	
L	E
168" and greater	12"

POST EMBEDMENT DEPTH

Area of Sign Installation (Sq. Ft.)	D (Min)
20 or Less	4'
Greater than 20	5'

GENERAL NOTES

1. For multiple post installations, individual post spacing shall be greater than 3'-6".
2. See tables below for required number of posts.
3. For expressways and freeways, mounting height is 7'-3" (±) or 6'-3" (±) depending upon existence of sub-sign.
4. The (±) tolerance for mounting height is 3 inches.
5. Minimum mounting height for J assemblies (A4-5) is 7'-3" (±) or 6'-3" (±) per urban or rural detail respectively.
6. Offset distance shall be consistent with existing signs or consistent throughout length of project.
7. Folding stop signs (R1-1F) shall be mounted at a height of 5'-3" (±) or as directed by the engineer.
8. The Double Arrow sign (W12-1) shall be mounted at a height of 2'-3" (±). The Chevron sign (W1-8), Roundabout Chevron panel (R6-4B), Clearance Markers (W5-52), Mile Markers (D10 series) & End of Road Markers (W5-56 & W5-56A) shall be mounted at a height of 4"-3" (±).

* 6 feet from edge of a paved shoulder or 12 feet from the edge of pavement (edge line location) or 2 feet from outside edge of gravel, whichever is greater unless directed by project engineer.

** The existence of curb and gutter does not in itself mandate the vertical clearance illustrated. That height is typically measured where there is sidewalk adjacent to the roadway or parking is permitted. In the absence of sidewalk vertical clearance is measured from the top of the curb. Offset of signs is measured from the flow line.

*** See A4-3 sign plate for signs 4' or less in width or 20 S.F. or less in area.

TYPICAL INSTALLATION OF TYPE II SIGNS ON MULTIPLE POSTS

WISCONSIN DEPT OF TRANSPORTATION

APPROVED Matthew R Rauch
for State Traffic Engineer

DATE 9/21/2011 PLATE NO. A4-4.11

PROJECT NO:	HWY:	COUNTY:		SHEET NO: 109	E

FILE NAME : C:\Users\PROJECTS\tr_stdplate\A44.DGN PLOT DATE : 21-SEP-2011 13:36 PLOT BY : mscsja PLOT NAME : PLOT SCALE : 109.249131:1.000000 WISDOT/CADDS SHEET 42

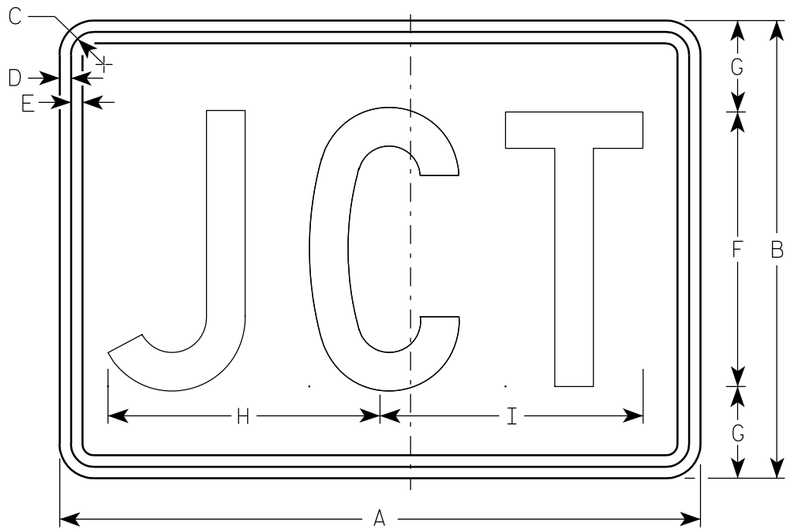

M2-1
MK2-1
MM2-1
MR2-1

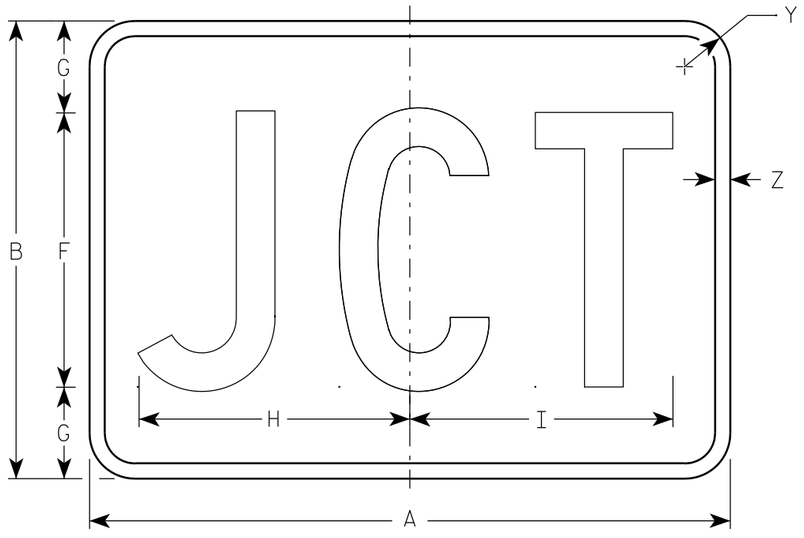

MB2-1
MG2-1
MN2-1

NOTES

1. Sign is Type II - See Note 5 - reference WIS DOT Standard Specification for HIGHWAY and STRUCTURE CONSTRUCTION latest edition.
2. Color:
   Background - See note 5
   Message - See note 5
3. Message Series - C
4. Corners may be square or rounded when base material is plywood but borders shall be rounded as shown. When base material is metal, the corners and borders shall be rounded.
5. M2-1 Background - White - Type H Reflective
   (Detour or temporary Signs - Reflective)
   Message - Black
   MB2-1 Background - Blue
   Message - White - Type H Reflective
   (Detour or temporary Signs - Reflective)
   MG2-1 Background - Green
   Message - White - Type H Reflective
   MK2-1 Background - Green
   Message - White - Type H Reflective
   MM2-1 Background - White - Type H Reflective
   Message - Green
   MN2-1 Background - Brown
   Message - White - Type H Reflective
   MR2-1 Background - Brown
   Message - Yellow - Type H Reflective

Metric equivalent for this sign is:

SIZE	
1	
2	525 mm X 375 mm
3	750 mm X 525 mm
4	750 mm X 525 mm
5	750 mm X 525 mm

SIZE	A	B	C	D	E	F	G	H	I	J	K	L	M	N	O	P	Q	R	S	T	U	V	W	X	Y	Z	Area sq. ft.	Area m2
1																												
2	21	15	1 1/8	3/8	3/8	9	3	8 7/8	8 5/8																1 1/2	1/2	2.20	0.20
3	30	21	1 1/8	3/8	3/8	13	4	12 7/8	12 3/8																1 1/2	1/2	4.40	0.20
4	30	21	1 1/8	3/8	3/8	13	4	12 7/8	12 3/8																1 1/2	1/2	4.40	0.20
5	30	21	1 1/8	3/8	3/8	13	4	12 7/8	12 3/8																1 1/2	1/2	4.40	0.20

STANDARD SIGN
M2-1

WISCONSIN DEPT OF TRANSPORTATION

APPROVED Matthew R Rauch
for State Traffic Engineer

DATE 3/16/10 PLATE NO. M2-1.10

PROJECT NO:	HWY:	COUNTY:		SHEET NO: 110	E

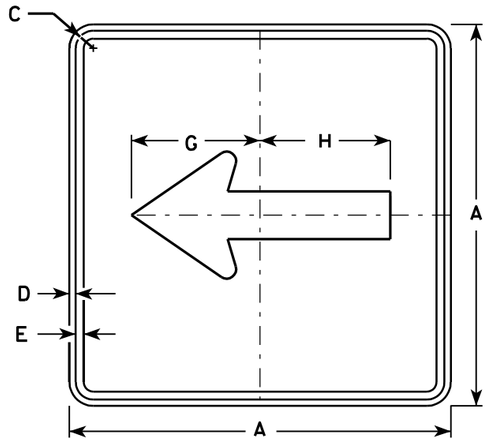

M6-1
MK6-1
MM6-1
MO6-1
MR6-1

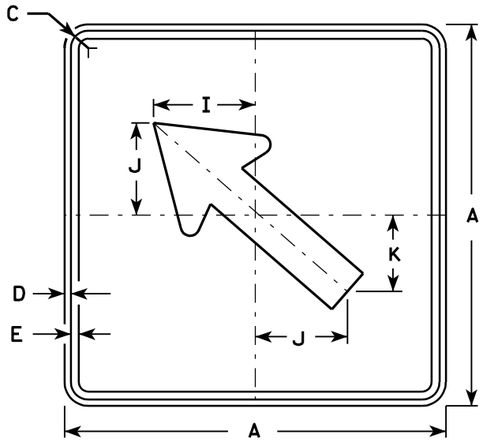

M6-2
MK6-2
MM6-2
MO6-2
MR6-2

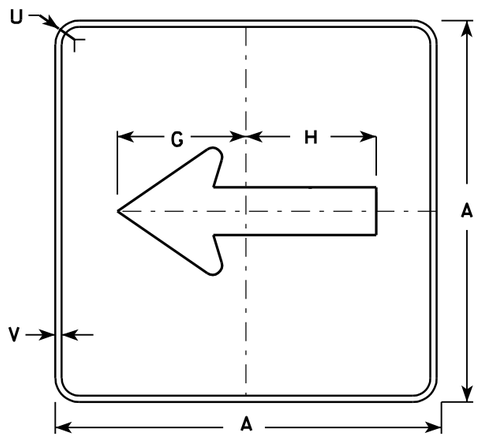

MB6-1
MG6-1
MN6-1

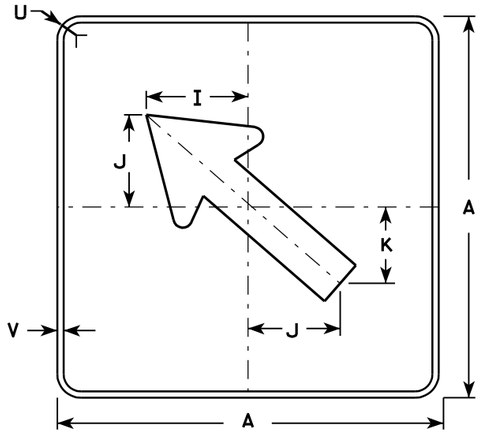

MB6-2
MG6-2
MN6-2

NOTES

1. Signs are Type II - See Note 4 - reference WIS DOT Standard Specification for HIGHWAY and STRUCTURE CONSTRUCTION latest edition.
2. Color:
   Background - See note 4
   Message - See note 4
3. Corners may be square or rounded when base material is plywood but borders shall be rounded as shown. When base material is metal, the corners and borders shall be rounded.
4. M6-1 and M6-2 Background - White - Type H Reflective (Detour or temporary Signs - Reflective) Message - Black
   MB6-1 and MB6-2 Background - Blue Message - White - Type H Reflective (Detour or temporary Signs - Reflective)
   MG6-1 and MG6-2 Background - Green Message - White - Type H Reflective
   MK6-1 and MK6-2 Background - Green Message - White - Type H Reflective
   MM6-1 and MM6-2 Background - White - Type H Reflective Message - Green
   MN6-1 and MN6-2 Background - Brown Message - White - Type H Reflective
   MO6-1 and MO6-2 Background - Orange - Reflective Message - Black
   MR6-1 and MR6-2 Background - Brown Message - Yellow - Type H Reflective

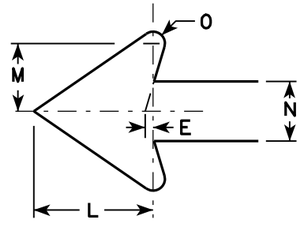

Metric equivalent for this sign is:

SIZE	
1	
2	525 mm X 525 mm
3	750 mm X 750 mm
4	750 mm X 750 mm
5	750 mm X 750 mm

SIZE	A	B	C	D	E	F	G	H	I	J	K	L	M	N	O	P	Q	R	S	T	U	V	W	X	Y	Z	Area sq. ft.	Area m2
1																												
2	21		1 1/8	3/8	3/8		7 1/2	7 1/8	5 5/8	5	4 1/4	5 1/4	3	2 5/8	1/2						1 1/2	1/2					3.06	0.28
3	30		1 3/8	1/2	5/8		10 3/4	10 1/4	8	7 1/4	6	7 1/2	4 1/4	3 3/4	3/4						1 7/8	1/2					6.25	0.56
4	30		1 3/8	1/2	5/8		10 3/4	10 1/4	8	7 1/4	6	7 1/2	4 1/4	3 3/4	3/4						1 7/8	1/2					6.25	0.56
5	30		1 3/8	1/2	5/8		10 3/4	10 1/4	8	7 1/4	6	7 1/2	4 1/4	3 3/4	3/4						1 7/8	1/2					6.25	0.56

STANDARD SIGN M6-1 & M6-2 SERIES

WISCONSIN DEPT OF TRANSPORTATION

APPROVED Matthew R Rauch
for State Traffic Engineer

DATE 3/16/10 PLATE NO. M6-1.12

PROJECT NO:	HWY:	COUNTY:		SHEET NO: 111	E

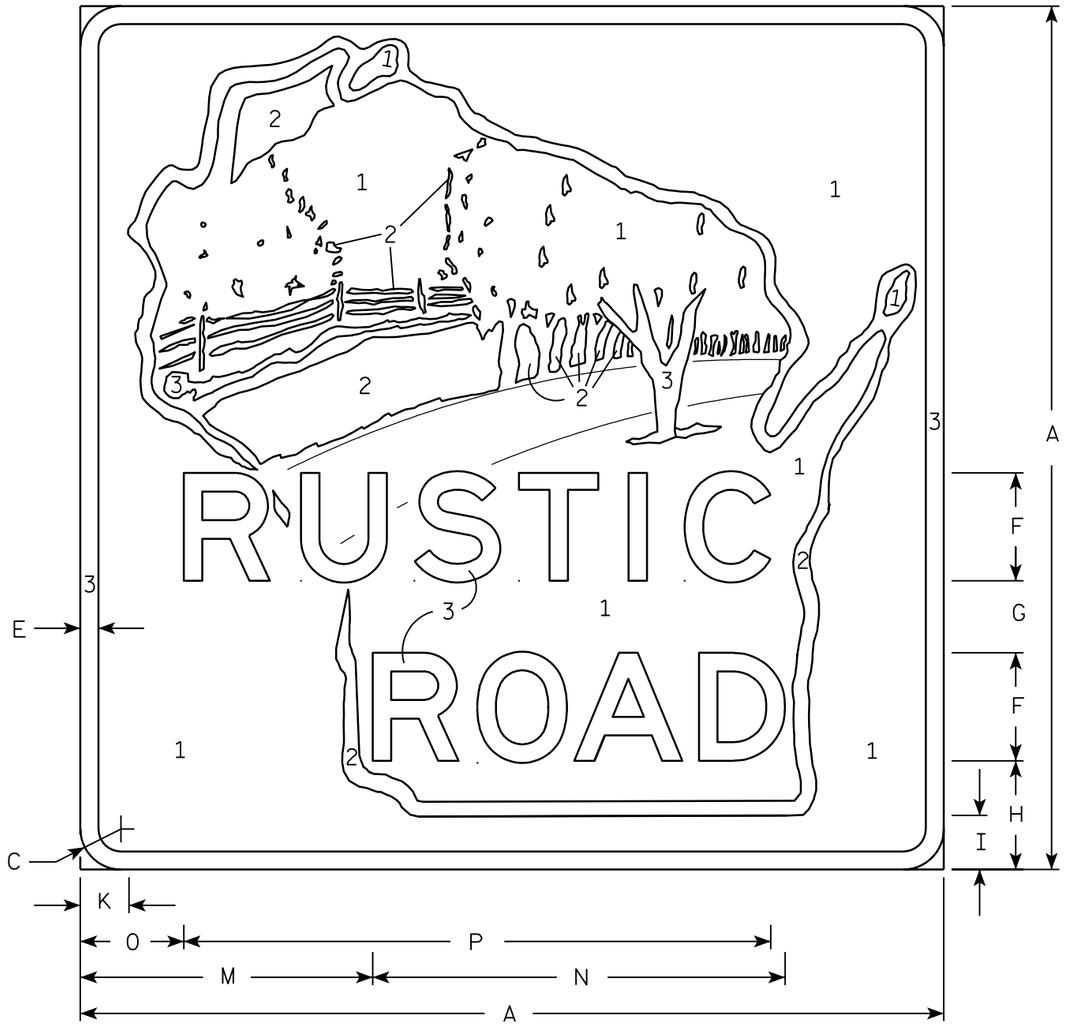

NOTES

1. Sign is Type II - Type H Reflective - reference WIS DOT Standard Specification for HIGHWAY and STRUCTURE CONSTRUCTION latest edition.
2. Color:
   Background - See note 5
   Message - See note 5.
3. Message Series - Modified E
4. Corners may be square or rounded when base material is plywood but borders shall be rounded as shown. When base material is metal, the corners and borders shall be rounded.
5. The sign will be color coded by numerical designation Numeral *1 Brown
   2 Type H Reflective White
   3 Reflective Yellow

   Exact color descriptions will be furnished upon request.

Metric equivalent for this sign is:

SIZE	
1	
2	600 mm X 600 mm
3	
4	
5	

SIZE	A	B	C	D	E	F	G	H	I	J	K	L	M	N	O	P	Q	R	S	T	U	V	W	X	Y	Z	Area sq. ft.	Area m2
1																												
2	24		1 1/8		1/2	3	2	3	1 1/2		1 3/8		8 1/8	11 1/4	2 7/8	16 1/4											4.0	0.36
3																												
4																												
5																												

STANDARD SIGN
MR1-99

WISCONSIN DEPT OF TRANSPORTATION

APPROVED Matthew R Rauch
for State Traffic Engineer

DATE 10/18/05 PLATE NO. MR1-99.5

PROJECT NO:	HWY:	COUNTY:		SHEET NO: 112	E

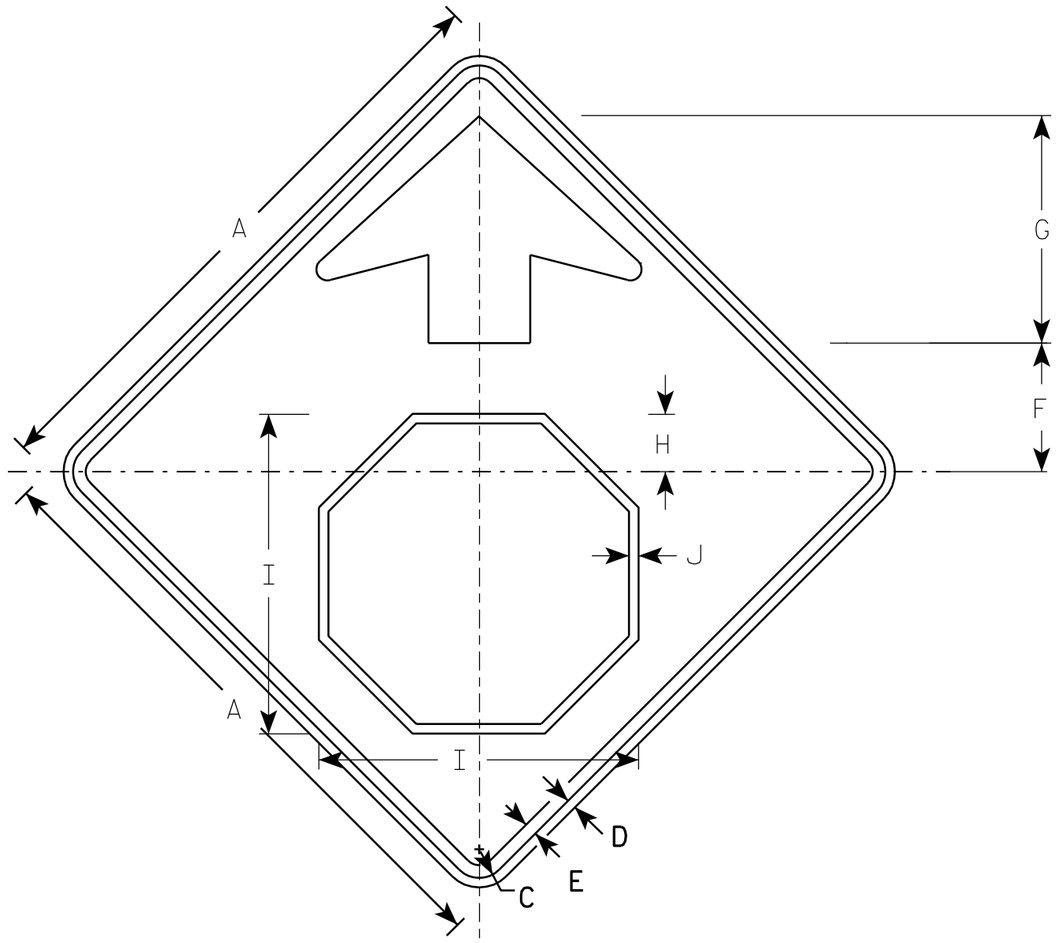

W3-1

NOTES

1. All Signs Type II - Type F Reflective - reference WIS DOT Standard Specification for HIGHWAY and STRUCTURE CONSTRUCTION latest edition.
2. Color:
   Background - YELLOW
   Arrow & Border - BLACK
   Stop Symbol - WHITE BORDER ON RED BACKGROUND

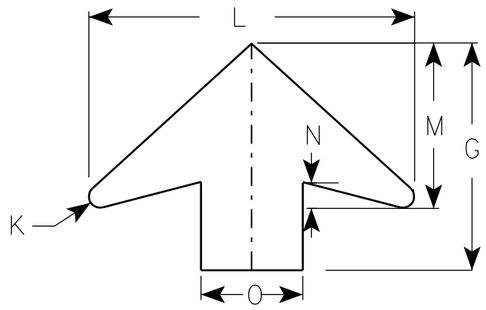

ARROW DETAIL

SIZE	A	B	C	D	E	F	G	H	I	J	K	L	M	N	O	P	Q	R	S	T	U	V	W	X	Y	Z	Area sq. ft.
1	30		1 3/8	1/2	5/8	6 1/4	11 1/4	2 7/8	15 3/4	1/2	1/2	16	8	1 1/4	5												6.25
2S	36		1 5/8	5/8	3/4	7 1/2	13 1/2	3 1/2	19	5/8	5/8	19 1/4	9 3/4	1 5/8	6												9.0
2M	36		1 5/8	5/8	3/4	7 1/2	13 1/2	3 1/2	19	5/8	5/8	19 1/4	9 3/4	1 5/8	6												9.0
3	36		1 5/8	5/8	3/4	7 1/2	13 1/2	3 1/2	19	5/8	5/8	19 1/4	9 3/4	1 5/8	6												9.0
4	48		2 1/4	3/4	1	10	17 7/8	4 1/2	25 1/8	3/4	7/8	25 5/8	13	2	8												16.0
5	48		2 1/4	3/4	1	10	17 7/8	4 1/2	25 1/8	3/4	7/8	25 5/8	13	2	8												16.0

STANDARD SIGN
W3-1

WISCONSIN DEPT OF TRANSPORTATION

APPROVED Matthew R Rauch
for State Traffic Engineer

DATE 6/7/10 PLATE NO. W3-1.12

PROJECT NO:

SHEET NO: 113 E

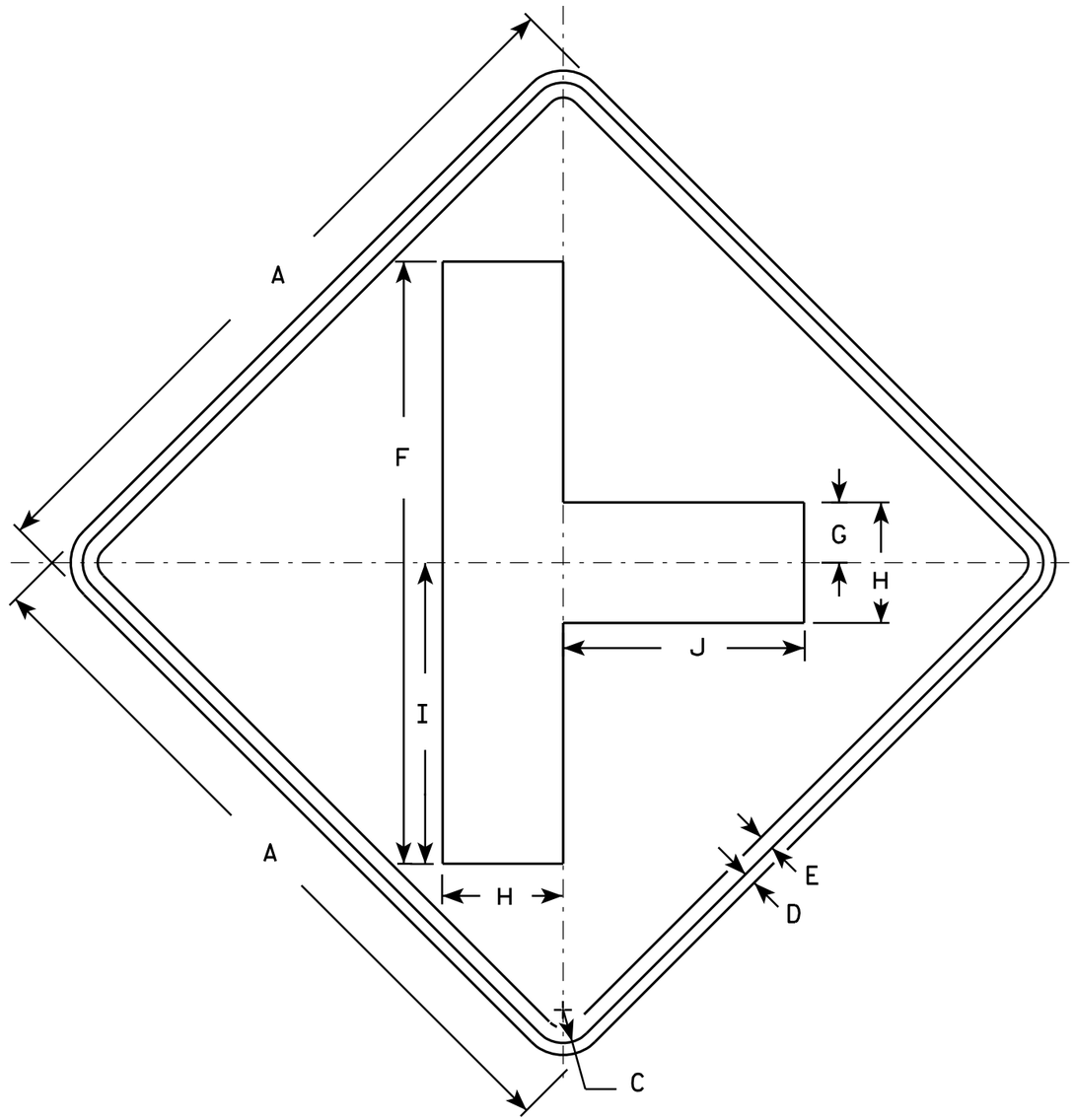

W2-2

NOTES

1. Sign is Type II - Type F Reflective - reference WIS DOT Standard Specification for HIGHWAY and STRUCTURE CONSTRUCTION latest edition.
2. Color:
   Background - Yellow
   Message - Black
3. Corners may be square or rounded when base material is plywood but borders shall be rounded as shown. When base material is metal, the corners and borders shall be rounded.

SIZE	A	B	C	D	E	F	G	H	I	J	K	L	M	N	O	P	Q	R	S	T	U	V	W	X	Y	Z	Area sq. ft.
1	24		1 1/8	3/8	1/2	20	2	4	10	8																	4.0
2S	30		1 3/8	1/2	5/8	25	2 1/2	5	12 1/2	10																	6.25
2M	30		1 3/8	1/2	5/8	25	2 1/2	5	12 1/2	10																	6.25
3	36		1 5/8	5/8	3/4	30	3	6	15	12																	9.0
4	48		2 1/4	3/4	1	40	4	8	20	16																	16.0
5																											

STANDARD SIGN
W2-2

WISCONSIN DEPT OF TRANSPORTATION

APPROVED Matthew R Rauch
for State Traffic Engineer

DATE 5/29/12 PLATE NO. W2-2.6

PROJECT NO:	HWY:	COUNTY:		SHEET NO: 114	E

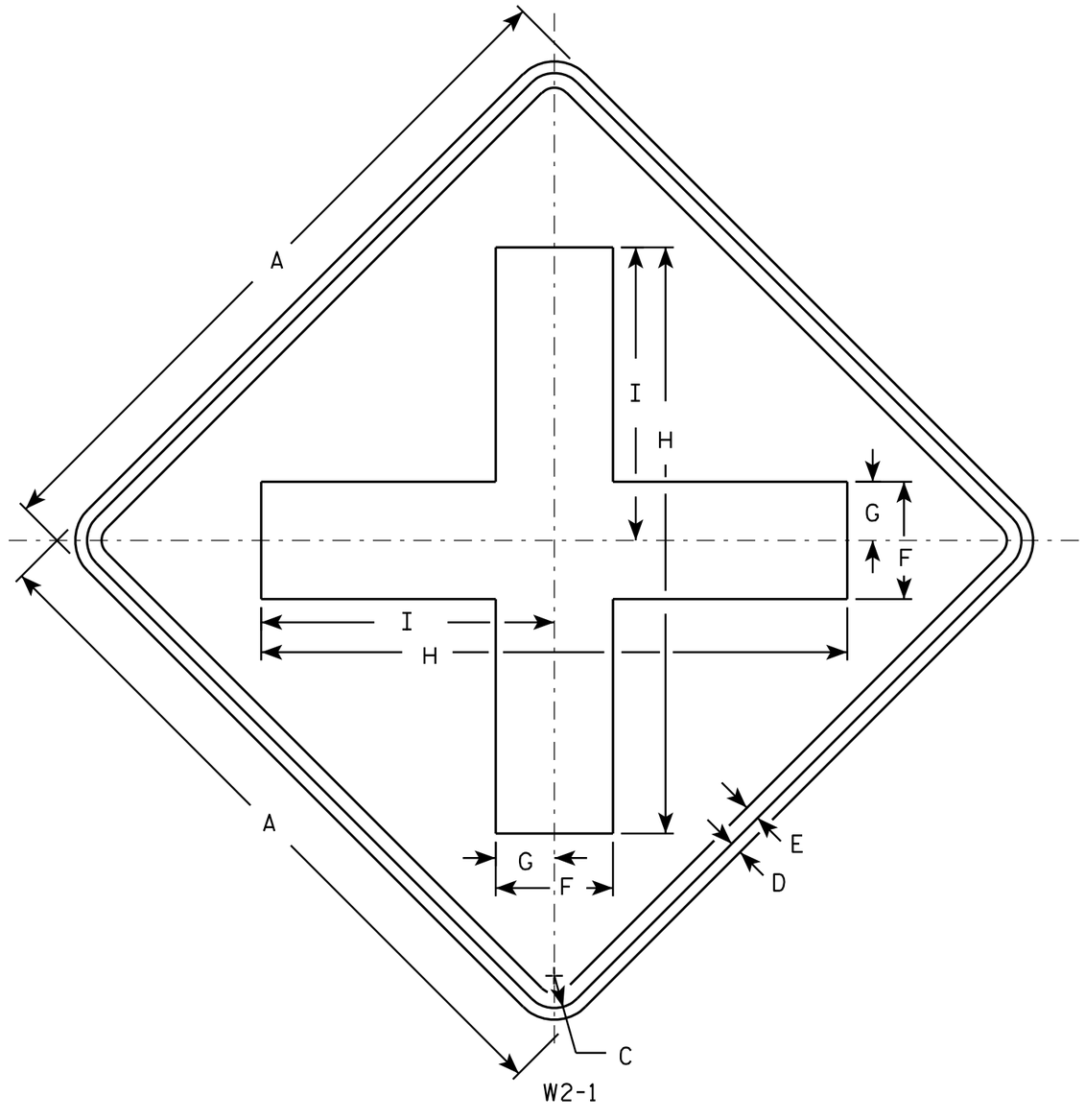

NOTES

1. Sign is Type II - Type F Reflective - reference WIS DOT Standard Specification for HIGHWAY and STRUCTURE CONSTRUCTION latest edition.
2. Color:
   Background - Yellow
   Message - Black
3. Corners may be square or rounded when base material is plywood but borders shall be rounded as shown. When base material is metal, the corners and borders shall be rounded.

SIZE	A	B	C	D	E	F	G	H	I	J	K	L	M	N	O	P	Q	R	S	T	U	V	W	X	Y	Z	Area sq. ft.
1	24		1 1/8	3/8	1/2	4	2	20	10																		4.0
2S	30		1 3/8	1/2	5/8	5	2 1/2	25	12 1/2																		6.25
2M	30		1 3/8	1/2	5/8	5	2 1/2	25	12 1/2																		6.25
3	36		1 5/8	5/8	3/4	6	3	30	15																		9.0
4	48		2 1/4	3/4	1	8	4	40	20																		16.0
5																											

STANDARD SIGN
W2-1

WISCONSIN DEPT OF TRANSPORTATION

APPROVED Matthew R Rauch
for State Traffic Engineer

DATE 5/29/12 PLATE NO. W2-1.9

PROJECT NO: | HWY: | COUNTY: | SHEET NO: 115 | E

FILE NAME : C:\CAEFiles\Projects\tr_stdplate\W21.DGN PLOT DATE : 29-MAY-2012 10:10 PLOT BY : mscsja PLOT NAME : PLOT SCALE : 6.202372:1.000000
WISDOT/CADDS SHEET 42

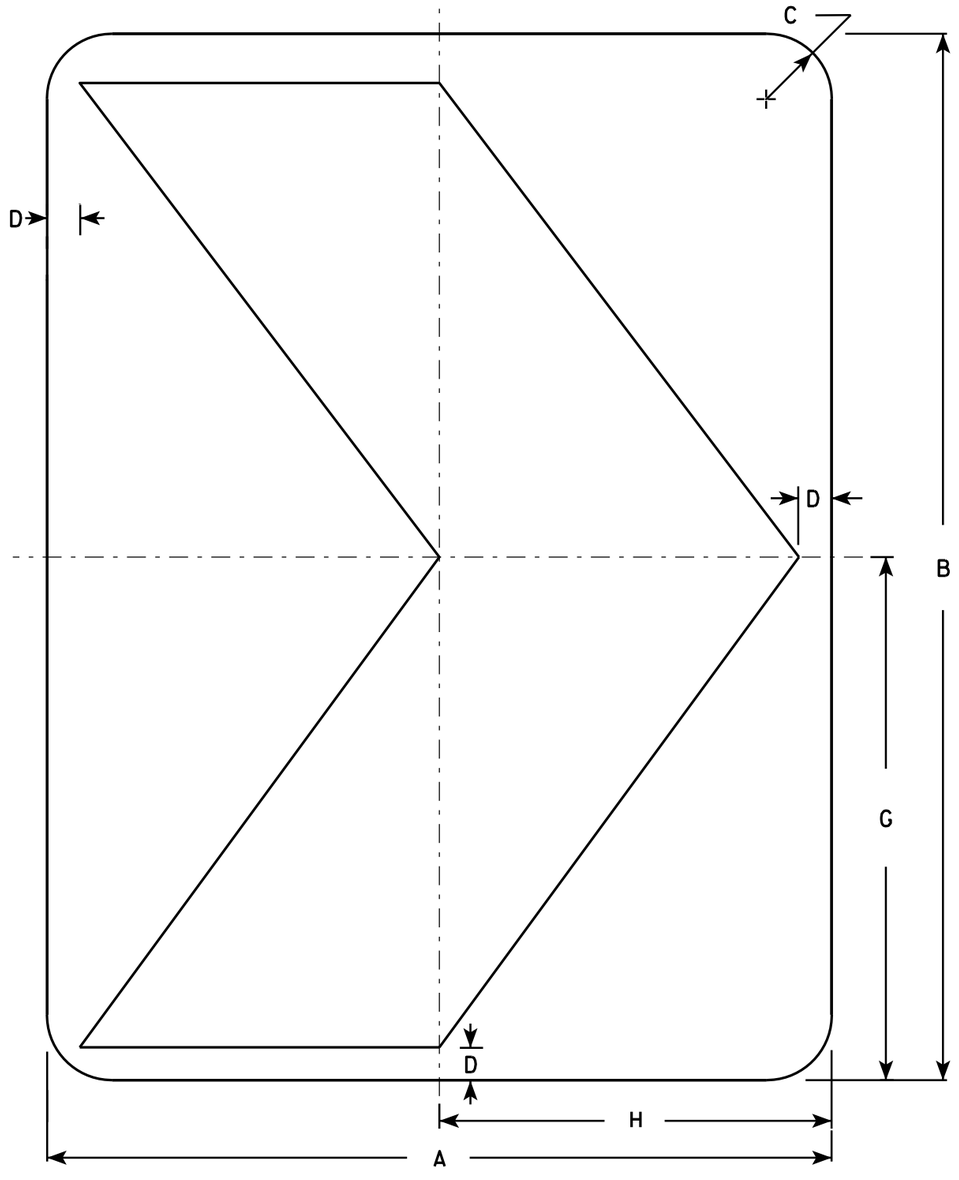

NOTES

1. Sign is Type II - Type F Reflective - reference WIS DOT Standard Specification for HIGHWAY and STRUCTURE CONSTRUCTION latest edition.
2. Color:
   Background - Yellow
   Message - Black
3. Corners may be square or rounded when base material is plywood but borders shall be rounded as shown. When base material is metal, the corners and borders shall be rounded.

W1-8

SIZE	A	B	C	D	E	F	G	H	I	J	K	L	M	N	O	P	Q	R	S	T	U	V	W	X	Y	Z	Area sq. ft.
1	12	18	1 ½	½			9	6																			1.5
2S	18	24	1 ½	¾			12	9																			3.0
2M	18	24	1 ½	¾			12	9																			3.0
3	24	30	1 ½	1			15	12																			5.0
4	30	36	1 ⅞	1 ¼			18	15																			7.5
5	36	48	2 ¼	1 ½			24	18																			12.0

STANDARD SIGN
W1-8

WISCONSIN DEPT OF TRANSPORTATION

APPROVED Matthew R Rauch
for State Traffic Engineer

DATE 6/7/10 PLATE NO. W1-8.6

PROJECT NO:

SHEET NO: 116 E

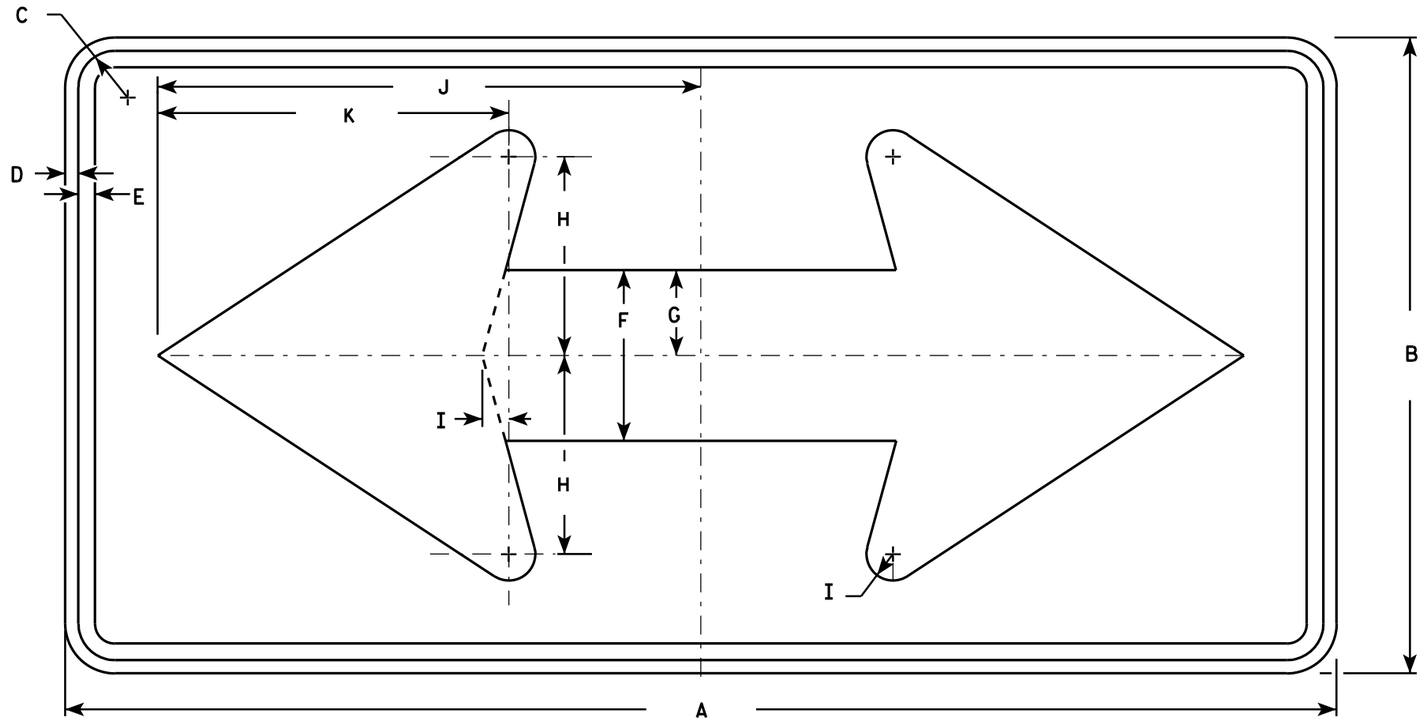

W1-7

NOTES

1. Sign is Type II - Type F Reflective - reference WIS DOT Standard Specification for HIGHWAY and STRUCTURE CONSTRUCTION latest edition.
2. Color:
   Background - Yellow
   Message - Black
3. Corners may be square or rounded when base material is plywood but borders shall be rounded as shown. When base material is metal, the corners and borders shall be rounded.

SIZE	A	B	C	D	E	F	G	H	I	J	K	L	M	N	O	P	Q	R	S	T	U	V	W	X	Y	Z	Area sq. ft.
1	36	18	1 1/8	3/8	1/2	5	2 1/2	5 3/4	3/4	15 5/8	10 1/8																4.5
2S	48	24	1 3/8	1/2	5/8	6 1/2	3 1/4	7 1/2	1	20 1/2	13 1/4																8.0
2M	48	24	1 3/8	1/2	5/8	6 1/2	3 1/4	7 1/2	1	20 1/2	13 1/4																8.0
3	60	30	1 3/8	1/2	5/8	8	4	9 1/4	1 1/4	25 3/8	16 1/4																12.5
4	60	30	1 3/8	1/2	5/8	8	4	9 1/4	1 1/4	25 3/8	16 1/4																12.5
5	96	48	2 1/4	3/4	1	13	6 1/2	15	2	41	26 1/2																32.0

STANDARD SIGN
W1-7

WISCONSIN DEPT OF TRANSPORTATION

APPROVED Matthew R Rauch
for State Traffic Engineer

DATE 6/7/10 PLATE NO. W1-7.7

PROJECT NO: | HWY: | COUNTY: | SHEET NO: 117 | E

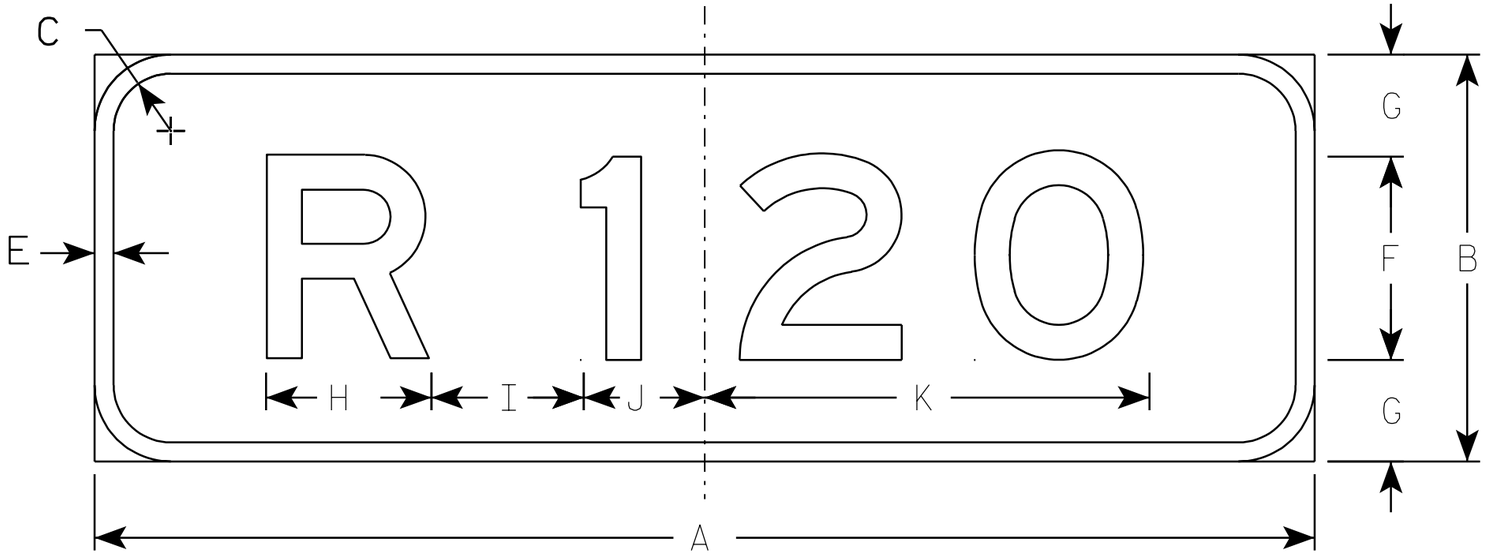

MR4-53

NOTES

1. Sign is Type II - Type H Reflective - reference WIS DOT Standard Specification for HIGHWAY and STRUCTURE CONSTRUCTION latest edition.
2. Color:
   Background - Brown
   Message - Yellow - Type H Reflective
3. Message Series - E
4. Corners may be square or rounded when base material is plywood but borders shall be rounded as shown. When base material is metal, the corners and borders shall be rounded.

Metric equivalent for this sign is:

SIZE	
1	
2	600 mm X 200 mm
3	
4	
5	

SIZE	A	B	C	D	E	F	G	H	I	J	K	L	M	N	O	P	Q	R	S	T	U	V	W	X	Y	Z	Area sq. ft.	Area m2
1																												
2	24	8	1 1/8		3/8	4	2	3 1/4	3	2 3/8	8 3/4																1.33	0.12
3																												
4																												
5																												

STANDARD SIGN
MR4-53

WISCONSIN DEPT OF TRANSPORTATION

APPROVED Matthew R Rauch
for State Traffic Engineer

DATE 2/07/03 PLATE NO. MR4-53.1

PROJECT NO:	HWY:	COUNTY:		SHEET NO: 118	E

FILE NAME : C:\Users\Projects\tr_stdplate\MR453.DGN PLOT DATE : 18-OCT-2005 15:42 PLOT BY : DITJPH PLOT NAME : PLOT SCALE : 2.980418:1.000000

WISDOT/CADDS SHEET 42

7

7

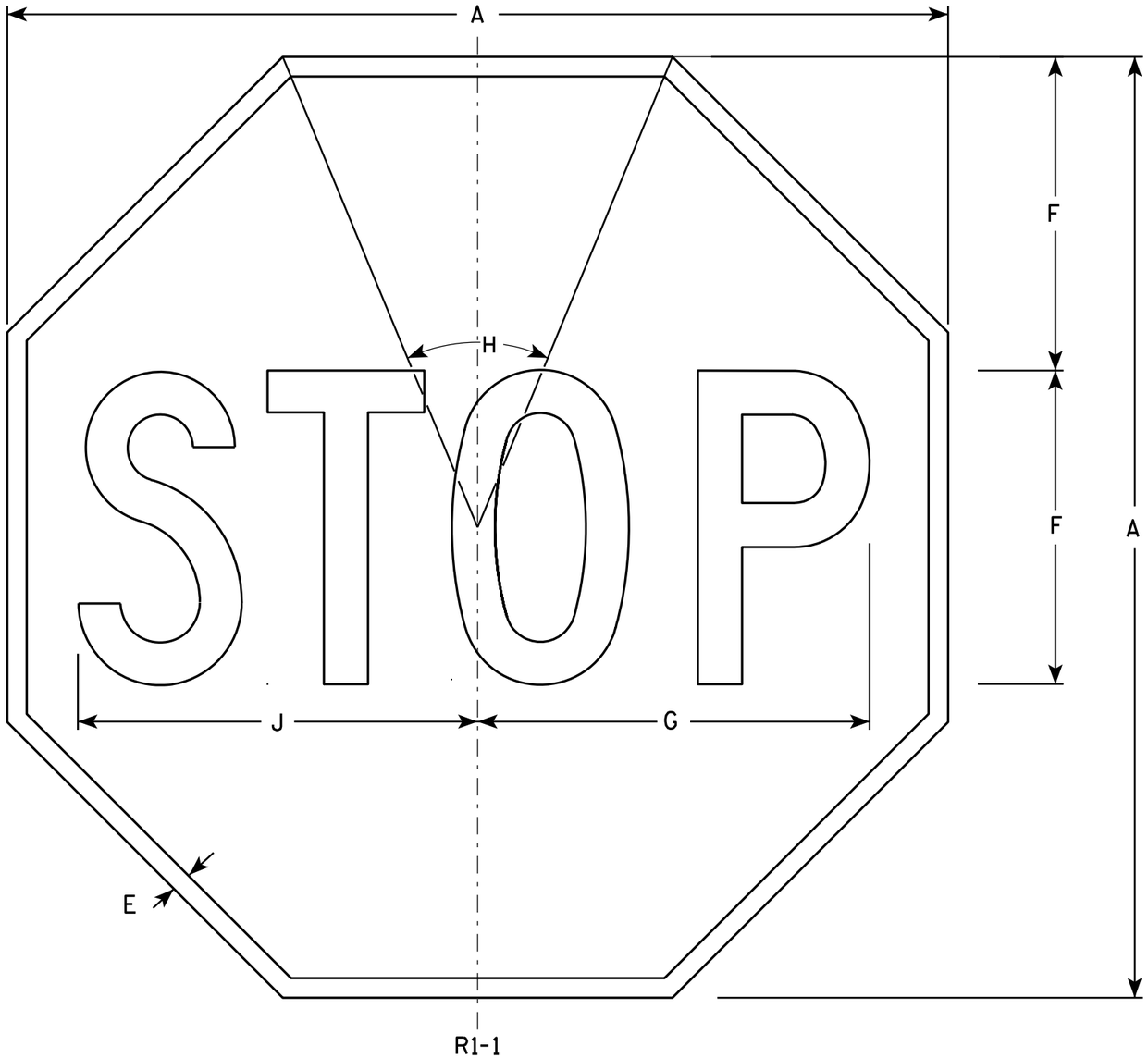

NOTES

1. Sign is Type II - Type H Reflective - reference WIS DOT Standard Specification for HIGHWAY and STRUCTURE CONSTRUCTION latest edition.
2. Color:
   Background - Red
   Message - White
3. Message Series - C

SIZE	A	B	C	D	E	F	G	H	I	J	K	L	M	N	O	P	Q	R	S	T	U	V	W	X	Y	Z	Area sq. ft.
1	24				3/8	8	10	45°		10 1/4																	3.31
2S	30				5/8	10	12 1/2	45°		12 3/4																	5.18
2M	36				3/4	12	15	45°		15 3/8																	7.46
3	36				3/4	12	15	45°		15 3/8																	7.46
4	48				1	16	20	45°		20 1/2																	13.25
5	48				1	16	20	45°		20 1/2																	13.25
6	18				3/8	6	7 3/4	45°		7 3/4																	1.86
7	12				1/4	4	5	45°		5 1/8																	0.78

STANDARD SIGN
R1-1

WISCONSIN DEPT OF TRANSPORTATION

APPROVED Matthew R Rauch
for State Traffic Engineer

DATE 12/03/10 PLATE NO. R1-1.12

PROJECT NO:	HWY:	COUNTY:		SHEET NO: 119	E

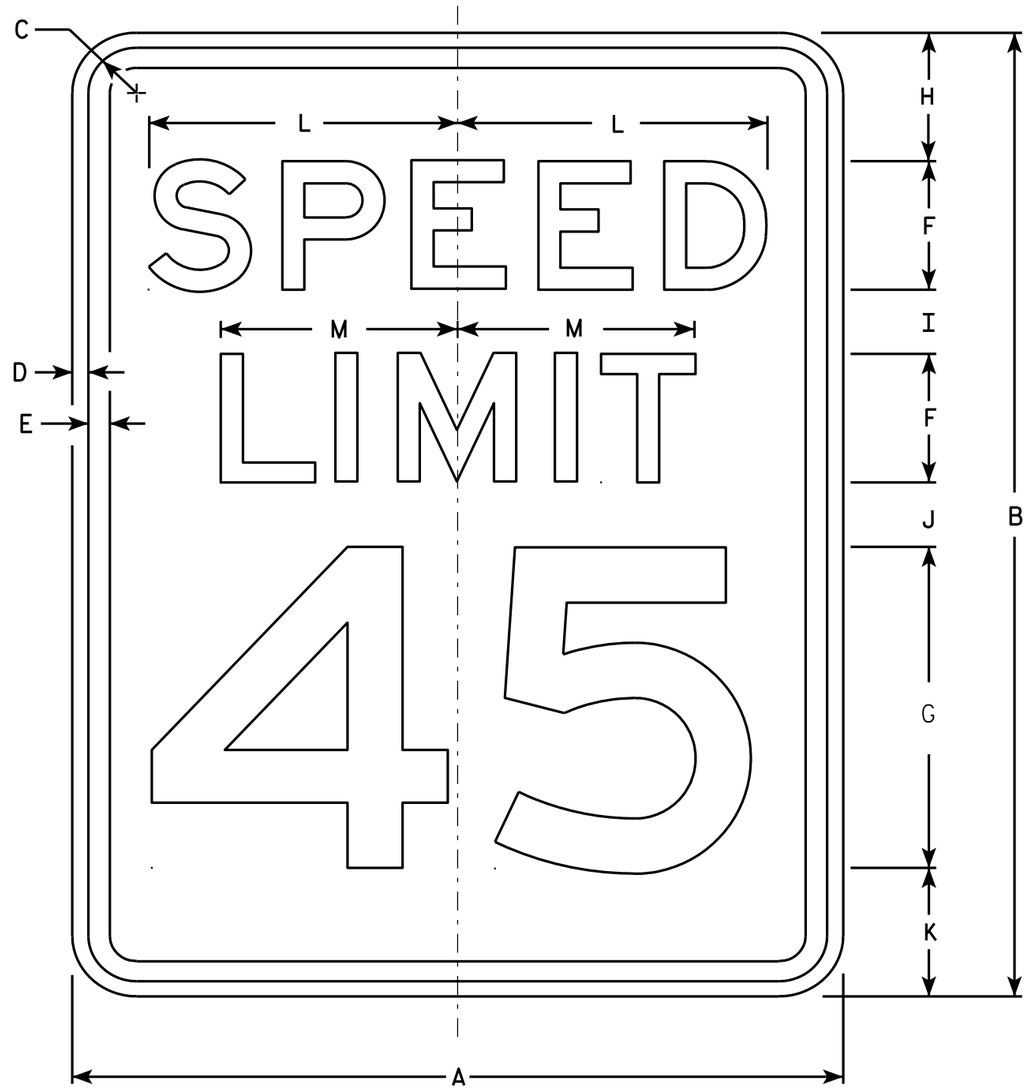

R2-1

NOTES

1. Sign is Type II - Type H Reflective - reference WIS DOT Standard Specification for HIGHWAY and STRUCTURE CONSTRUCTION latest edition.
2. Color:
   Background - White
   Message - Black
3. Message Series - E
4. Corners may be square or rounded when base material is plywood but borders shall be rounded as shown. When base material is metal, the corners and borders shall be rounded.
5. Substitute appropriate numerals and optically adjust spacing to achieve proper balance.

SIZE	A	B	C	D	E	F	G	H	I	J	K	L	M	N	O	P	Q	R	S	T	U	V	W	X	Y	Z	Area sq. ft.
1	18	24	1 1/8	3/8	1/2	3	8	3	2	2	3	7 1/4	5 1/2														3.0
2S	24	30	1 1/8	3/8	1/2	4	10	3	2 1/4	3 3/8	3 3/8	9 5/8	7 3/8														5.0
2M	30	36	1 3/8	1/2	5/8	5	12	5	2 1/2	2 1/2	4	12	9 1/4														7.5
3	36	48	1 3/8	1/2	5/8	6	14	6	5	5	6	14 3/8	11														12.0
4	36	48	1 3/8	1/2	5/8	6	14	6	5	5	6	14 3/8	11														12.0
5	48	60	2 1/4	3/4	1	8	20	6	4 1/2	6 3/4	6 3/4	19 1/4	14 5/8														20.0

STANDARD SIGN
R2-1

WISCONSIN DEPT OF TRANSPORTATION

APPROVED Matthew R Rauch
for State Traffic Engineer

DATE 5/26/10 PLATE NO. R2-1.13

PROJECT NO: | HWY: | COUNTY: | SHEET NO: 120 | E

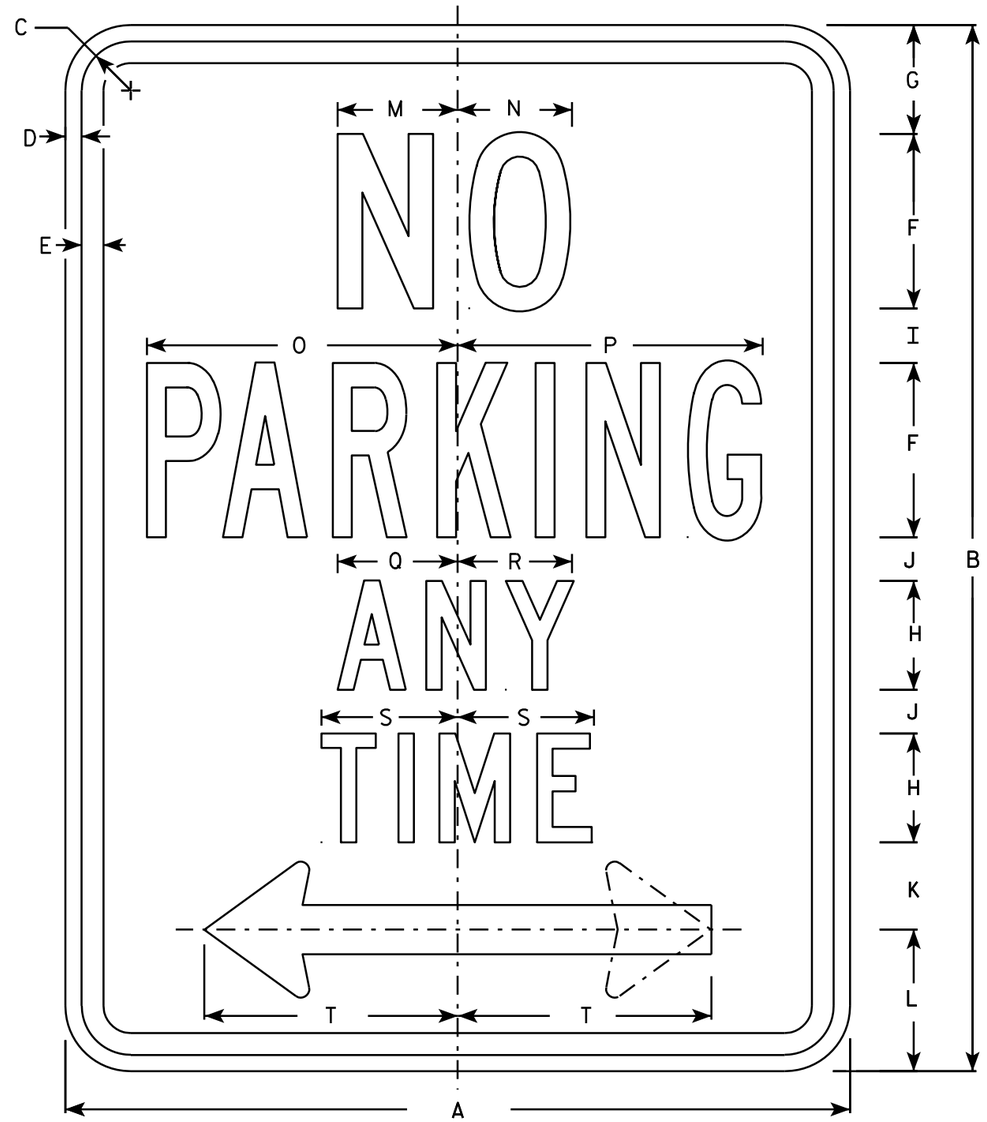

R7-1

NOTES

1. Sign is Type II - Type H Reflective - reference WIS DOT Standard Specification for HIGHWAY and STRUCTURE CONSTRUCTION latest edition.
2. Color:
   Background - White
   Message - Red
3. Message Series - See Note 5
4. Corners may be square or rounded when base material is plywood but borders shall be rounded as shown. When base material is metal, the corners and borders shall be rounded.
5. Lines 1, 3 and 4 are series C, line 2 is series B.
6. R7-1D (double arrow)
   R7-1L (left arrow)
   R7-1R (right arrow)

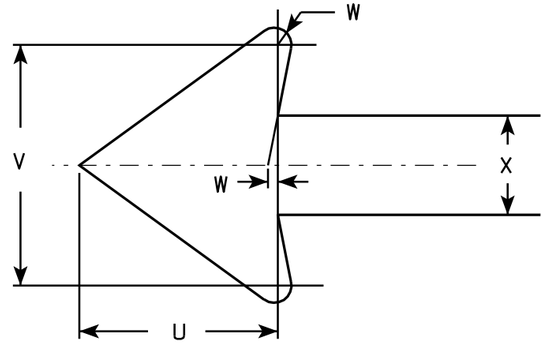

SIZE	A	B	C	D	E	F	G	H	I	J	K	L	M	N	O	P	Q	R	S	T	U	V	W	X	Y	Z	Area sq. ft.
1	12	18	1 1/8	3/8	3/8	3	1 7/8	2	7/8	5/8	1 1/2	2 1/2	2	2	4 7/8	4 7/8	2 1/4	2 1/8	2 1/2	3 7/8	1 1/2	1 3/4	1/8	3/4			1.5
2S	18	24	1 1/8	3/8	1/2	4	2 1/2	2 1/2	1 1/4	1	2	3 1/4	2 3/4	2 5/8	7 1/8	7	2 3/4	2 5/8	3 1/8	5 7/8	2 1/4	2 5/8	1/4	1 1/8			3.0
2M	24	30	1 1/8	3/8	1/2	5	3	3	2	1 1/4	2 1/2	4	3 1/4	3 3/8	9 1/4	9 1/4	3 1/4	3 1/4	3 3/4	7 3/4	3	3 1/2	1/4	1 1/2			5.0
3	24	30	1 1/8	3/8	1/2	5	3	3	2	1 1/4	2 1/2	4	3 1/4	3 3/8	9 1/4	9 1/4	3 1/4	3 1/4	3 3/4	7 3/4	3	3 1/2	1/4	1 1/2			5.0
4																											
5																											

STANDARD SIGN
R7-1

WISCONSIN DEPT OF TRANSPORTATION

APPROVED Matthew R Rauch
for State Traffic Engineer

DATE 3/31/2011 PLATE NO. R7-1.9

PROJECT NO: | HWY: | COUNTY: | SHEET NO: 121 | E

FILE NAME : C:\Users\PROJECTS\tr_stdplate\R71.DGN PLOT DATE : 31-MAR-2011 09:20 PLOT BY : mscsja PLOT NAME : PLOT SCALE : 3.476110:1.000000

WISDOT/CADDS SHEET 42

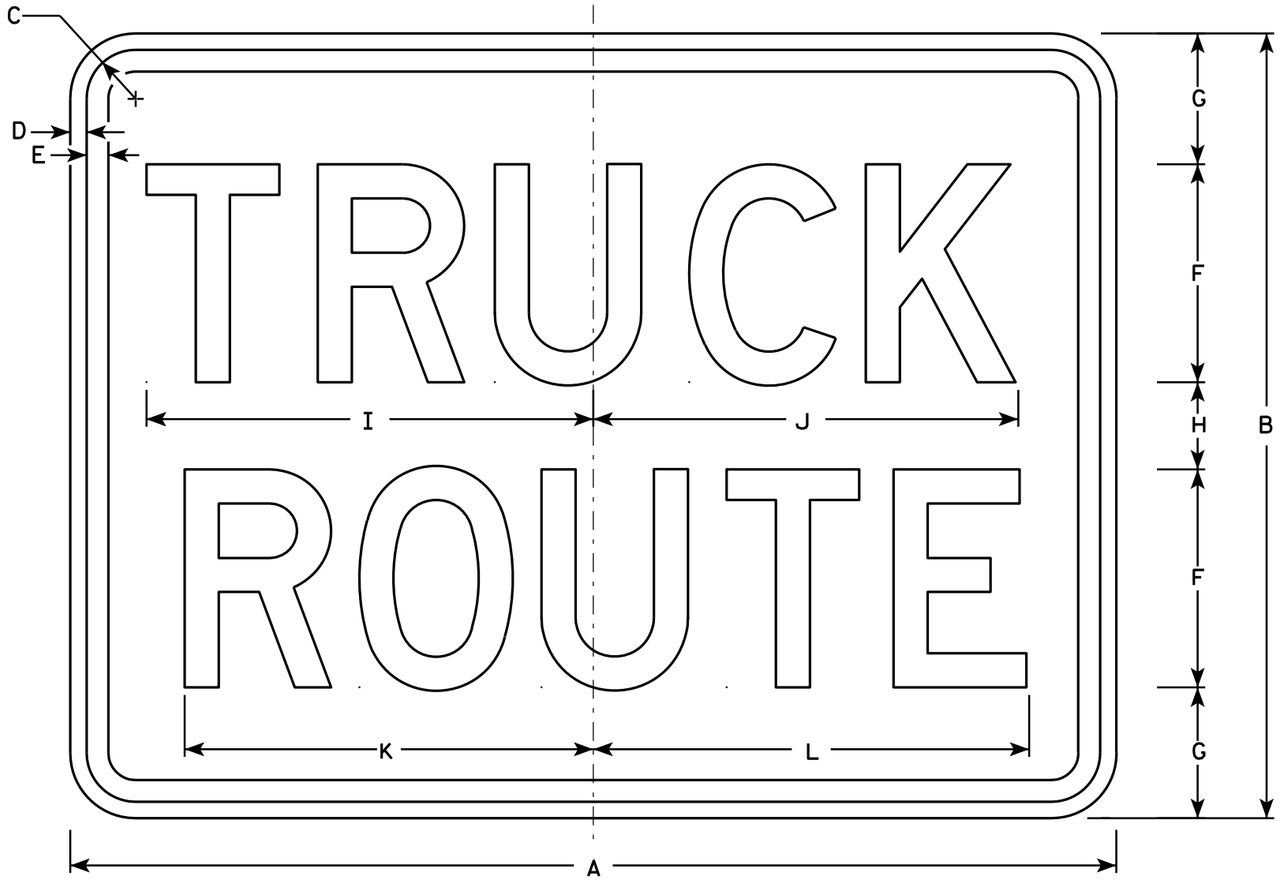

R14-1

NOTES

1. Sign is Type II - Type H Reflective - reference WIS DOT Standard Specification for HIGHWAY and STRUCTURE CONSTRUCTION latest edition.
2. Color:
   Background - White
   Message - Black
3. Message Series - D
4. Corners may be square or rounded when base material is plywood but borders shall be rounded as shown. When base material is metal, the corners and borders shall be rounded.

SIZE	A	B	C	D	E	F	G	H	I	J	K	L	M	N	O	P	Q	R	S	T	U	V	W	X	Y	Z	Area sq. ft.
1																											
2	24	18	1 1/8	3/8	1/2	5	3	2	10 1/4	9 3/4	9 3/8	10															3.0
2	24	18	1 1/8	3/8	1/2	5	3	2	10 1/4	9 3/4	9 3/8	10															3.0
3	30	24	1 1/8	3/8	1/2	6	4	4	12 1/4	11 3/4	11 1/4	12															5.0
4																											
5																											

STANDARD SIGN
R14-1

WISCONSIN DEPT OF TRANSPORTATION

APPROVED Matthew R Rauch
for State Traffic Engineer

DATE 4/1/11 PLATE NO. R14-1.6

PROJECT NO:	HWY:	COUNTY:		SHEET NO: 122	E

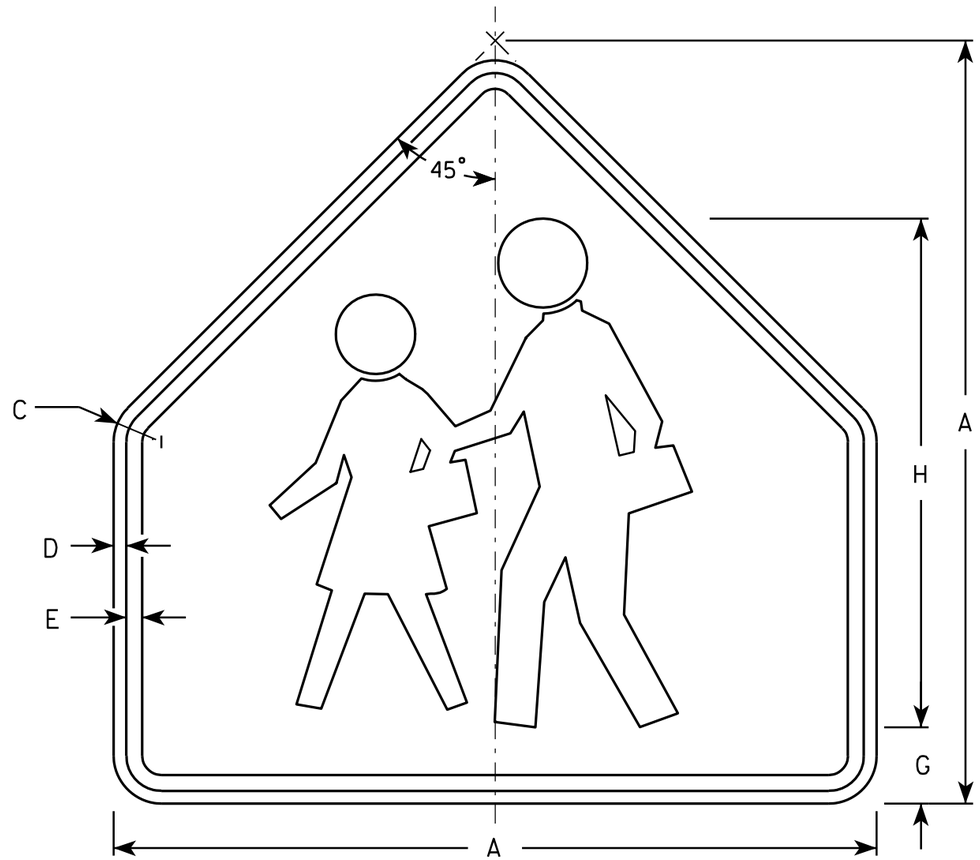

S1-1

NOTES

1. Sign is Type II - Type F Reflective - reference WIS DOT Standard Specification for HIGHWAY and STRUCTURE CONSTRUCTION latest edition.
2. Color:
   Background - Yellow-Green
   Message - Black
3. Corners may be square or rounded when base material is plywood but borders shall be rounded as shown. When base material is metal, the corners and borders shall be rounded.

SIZE	A	B	C	D	E	F	G	H	I	J	K	L	M	N	O	P	Q	R	S	T	U	V	W	X	Y	Z	Area sq. ft.
1	30		1 3/8	1/2	5/8		3	20																			4.69
2	36		1 5/8	5/8	3/4		3 1/2	24																			6.75
3	36		1 5/8	5/8	3/4		3 1/2	24																			6.75
4	48		2 1/4	3/4	1		4 3/4	32																			12
5																											

STANDARD SIGN
S1-1

WISCONSIN DEPT OF TRANSPORTATION

APPROVED Matthew R Rauch
for State Traffic Engineer

DATE 6/30/05 PLATE NO. S1-1.8

PROJECT NO:	HWY:	COUNTY:		SHEET NO: 123	E

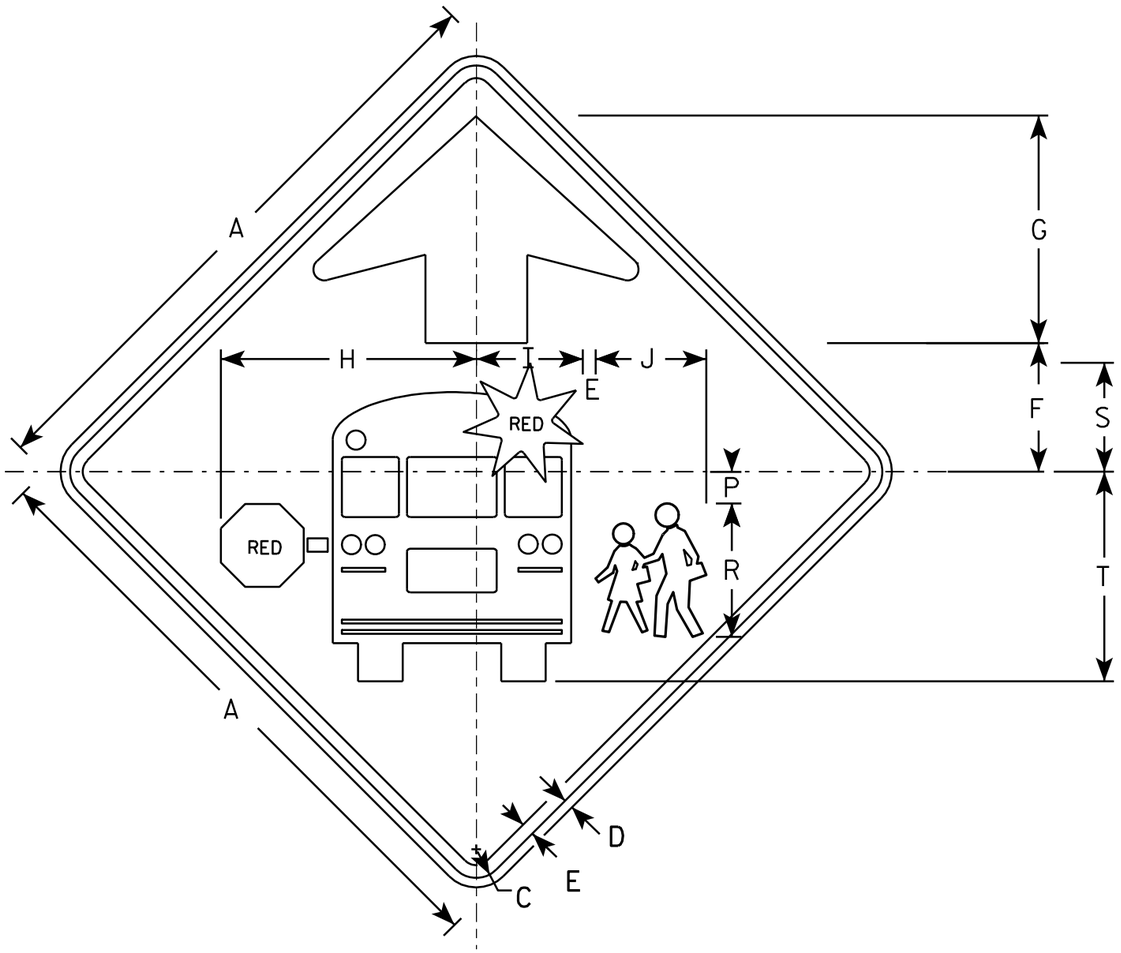

S3-1

NOTES

1. All Signs Type II - Type F Reflective - reference WIS DOT Standard Specification for HIGHWAY and STRUCTURE CONSTRUCTION latest edition.
2. Color:
   Background - YELLOW-GREEN
   Message - BLACK except as noted
   Circles except PEDS- RED BACKGROUND
3. Corners may be square or rounded when base material is plywood but borders shall be rounded as shown. When base material is metal, the corners and borders shall be rounded.

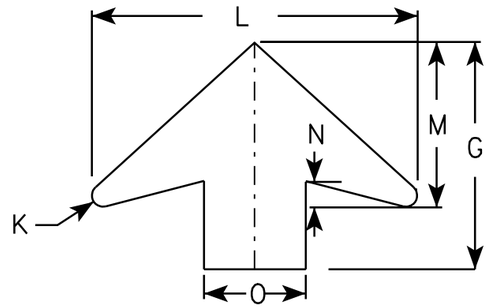

ARROW DETAIL

SIZE	A	B	C	D	E	F	G	H	I	J	K	L	M	N	O	P	Q	R	S	T	U	V	W	X	Y	Z	Area sq. ft.
1	30		1 3/8	1/2	5/8	6 1/4	11 1/4	12 1/2	5 1/4	5 1/2	1/2	16	8	1 1/4	5	1 1/2		6 5/8	5 3/8	10 3/8							6.25
2	36		1 5/8	5/8	3/4	7 1/2	13 1/2	15 1/8	6 1/4	6 1/2	5/8	19 1/4	9 3/4	1 5/8	6	1 7/8		7 7/8	6 3/8	12 3/8							9.0
3	48		2 1/4	3/4	1	10	17 7/8	20 1/8	8 3/8	8 3/4	7/8	25 5/8	13	2	8	2 1/2		10 1/2	8 1/2	16 1/2							16.0
4	48		2 1/4	3/4	1	10	17 7/8	20 1/8	8 3/8	8 3/4	7/8	25 5/8	13	2	8	2 1/2		10 1/2	8 1/2	16 1/2							16.0
5																											

STANDARD SIGN
S3-1

WISCONSIN DEPT OF TRANSPORTATION

APPROVED Matthew R Rauch
for State Traffic Engineer

DATE 6/8/10 PLATE NO. S3-1.6

PROJECT NO:

SHEET NO: 124 E

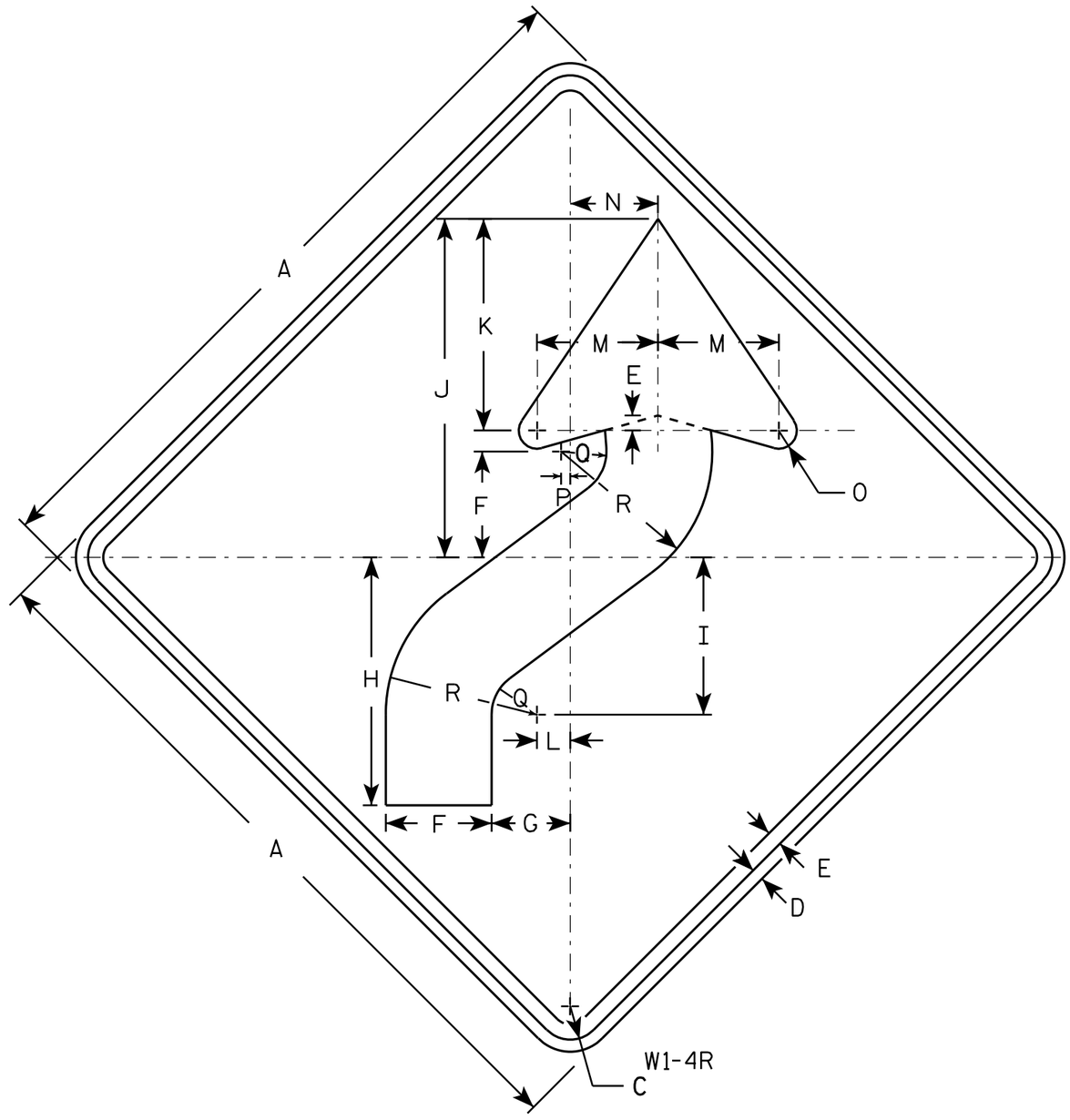

NOTES

1. Sign is Type II - Type F Reflective - reference WIS DOT Standard Specification for HIGHWAY and STRUCTURE CONSTRUCTION latest edition.
2. Color:
   Background - Yellow
   Message - Black
3. Corners may be square or rounded when base material is plywood but borders shall be rounded as shown. When base material is metal, the corners and borders shall be rounded.
4. W1-4L is the same as W1-4R except the arrow is reversed along the vertical centerline.

SIZE	A	B	C	D	E	F	G	H	I	J	K	L	M	N	O	P	Q	R	S	T	U	V	W	X	Y	Z	Area sq. ft.
1	24		1 1/8	3/8	1/2	3 1/2	2 5/8	8 1/4	5 1/4	11 1/4	7	1 1/8	4	3	5/8	1/4	1 1/2	5									4.0
2S	30		1 3/8	1/2	5/8	4 3/8	3 1/4	10 1/4	6 1/2	14	8 3/4	1 3/8	5	3 5/8	3/4	3/8	1 7/8	6 1/4									6.25
2M	36		1 5/8	5/8	3/4	5 1/4	4	12 3/8	7 7/8	16 7/8	10 1/2	1 5/8	6	4 1/2	1	1/2	2 1/4	7 1/2									9.0
3	36		1 5/8	5/8	3/4	5 1/4	4	12 3/8	7 7/8	16 7/8	10 1/2	1 5/8	6	4 1/2	1	1/2	2 1/4	7 1/2									9.0
4	36		1 5/8	5/8	3/4	5 1/4	4	12 3/8	7 7/8	16 7/8	10 1/2	1 5/8	6	4 1/2	1	1/2	2 1/4	7 1/2									9.0
5	48		2 1/4	3/4	1	7	5 1/4	16 1/2	10 1/2	22 1/2	14	2 1/4	8	6	1 1/4	5/8	3	10									16.0

STANDARD SIGN
W1-4

WISCONSIN DEPT OF TRANSPORTATION

APPROVED Matthew R Rauch
for State Traffic Engineer

DATE 5/17/12 PLATE NO. W1-4.11

PROJECT NO: | HWY: | COUNTY: | SHEET NO: 125 | E

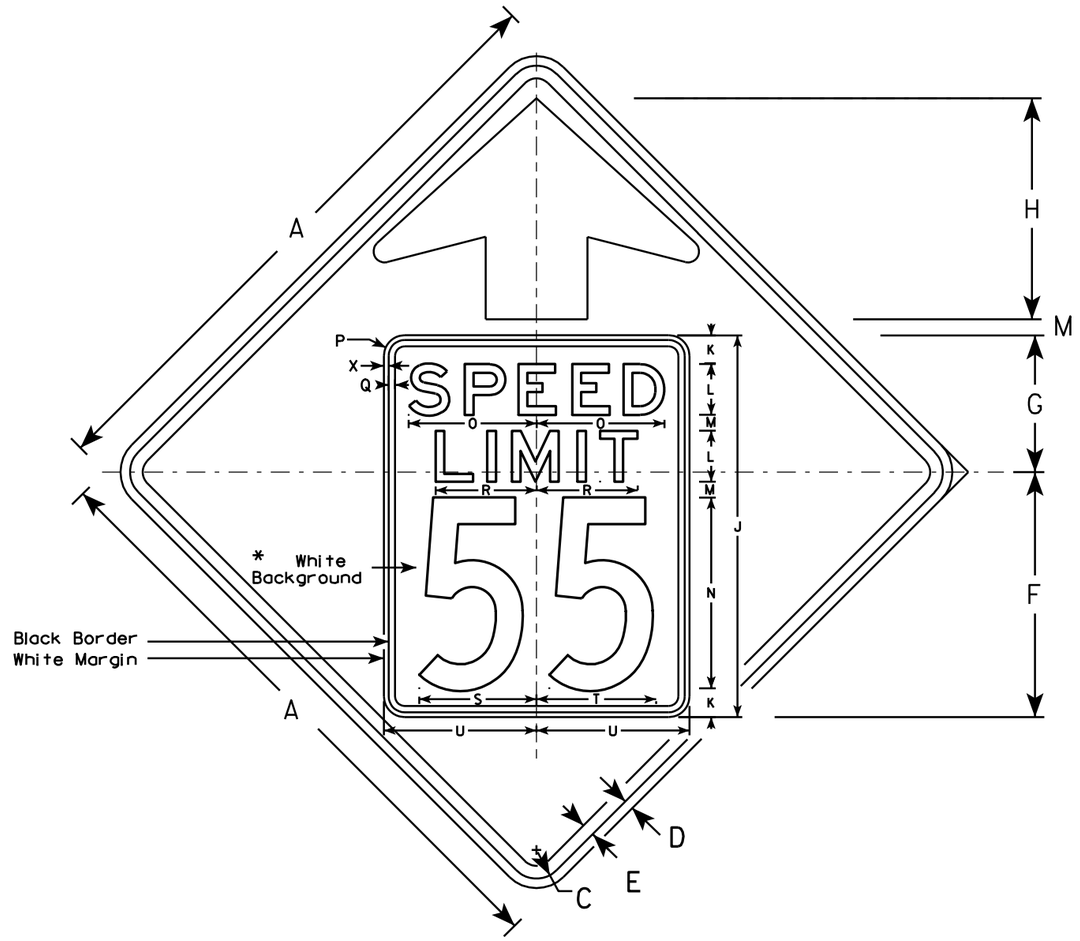

W3-5

NOTES

1. Sign is Type II - Type F Reflective - reference WIS DOT Standard Specification for HIGHWAY and STRUCTURE CONSTRUCTION latest edition.
2. Color: *
   Background - YELLOW*
   Message - BLACK
3. Message Series - C for numbers Series E for wording
4. Substitute appropriate numerals and optically adjust spacing to achieve proper balance

*Speed Limit Sign shall have a White Background

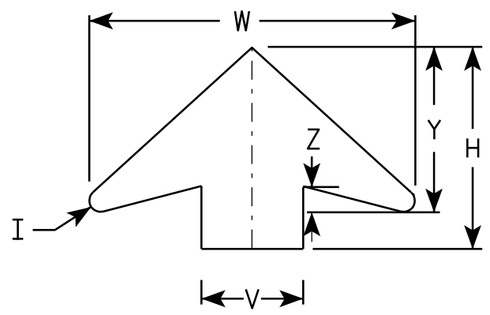

ARROW DETAIL

SIZE	A	B	C	D	E	F	G	H	I	J	K	L	M	N	O	P	O	R	S	T	U	V	W	X	Y	Z	Area sq. ft.
1																											
2S	36		1 5/8	5/8	3/4	14 1/2	9 1/2	11 1/2	5/8	24	2	3	1	12	7 1/8	1 1/2	3/8	5 3/4	7 1/4	7 1/8	9	6	19 1/4	3/8	9 3/4	1 5/8	9.0
2M	36		1 5/8	5/8	3/4	14 1/2	9 1/2	11 1/2	5/8	24	2	3	1	12	7 1/8	1 1/2	3/8	5 3/4	7 1/4	7 1/8	9	6	19 1/4	3/8	9 3/4	1 5/8	9.0
3	36		1 5/8	5/8	3/4	14 1/2	9 1/2	11 1/2	5/8	24	2	3	1	12	7 1/8	1 1/2	3/8	5 3/4	7 1/4	7 1/8	9	6	19 1/4	3/8	9 3/4	1 5/8	9.0
4	48		2 1/4	3/4	1	19 1/4	10 3/4	17 3/8	7/8	30	2 1/4	4	1 1/4	15	10	1 5/8	1/2	8	9 1/4	9 3/8	12	8	25 5/8	3/8	13	2	16.0
5	48		2 1/4	3/4	1	19 1/4	10 3/4	17 3/8	7/8	30	2 1/4	4	1 1/4	15	10	1 5/8	1/2	8	9 1/4	9 3/8	12	8	25 5/8	3/8	13	2	16.0

STANDARD SIGN
W3-5

WISCONSIN DEPT OF TRANSPORTATION

APPROVED Matthew R Rauch
for State Traffic Engineer

DATE 5/29/12 PLATE NO. W3-5.5

PROJECT NO:

SHEET NO: 126 E

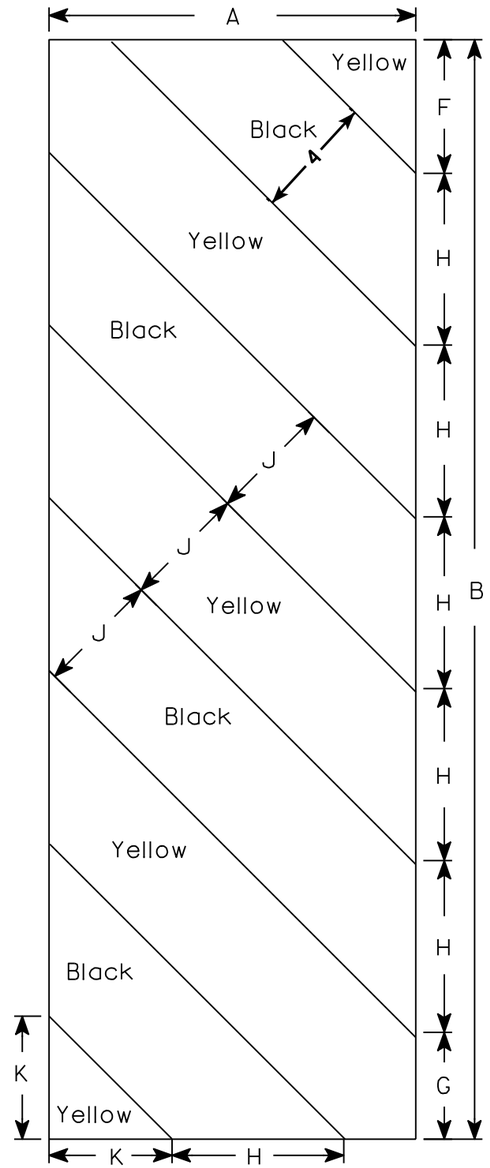

W5-52L

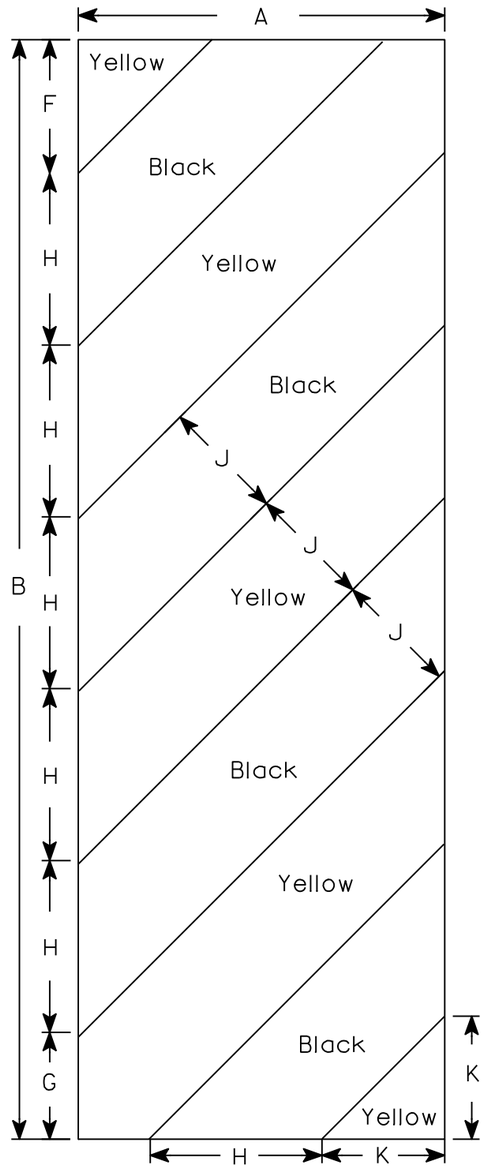

W5-52R

NOTES

1. Sign is Type II - Type F Reflective - reference WIS DOT Standard Specification for HIGHWAY and STRUCTURE CONSTRUCTION latest edition.
2. Color:
   Background - Yellow
   Message - Black
3. Corners may be square or rounded when base material is plywood but borders shall be rounded as shown. When base material is metal, the corners and borders shall be rounded.
4. Alternate colors of stripes as shown.

SIZE	A	B	C	D	E	F	G	H	I	J	K	L	M	N	O	P	Q	R	S	T	U	V	W	X	Y	Z	Area sq. ft.
1																											
2S	12	36				4 3/8	3 1/2	5 5/8	45°	4	4																3.0
2M	12	36				4 3/8	3 1/2	5 5/8	45°	4	4																3.0
3	18	54				6	5 1/2	8 1/2	45°	6	6 9/16																6.75
4																											
5																											

STANDARD SIGN

W5-52L & W5-52R

WISCONSIN DEPT OF TRANSPORTATION

APPROVED Matthew R Rauch
for State Traffic Engineer

DATE 5/29/12 PLATE NO. W5-52.9

PROJECT NO:	HWY:	COUNTY:		SHEET NO: 127	E

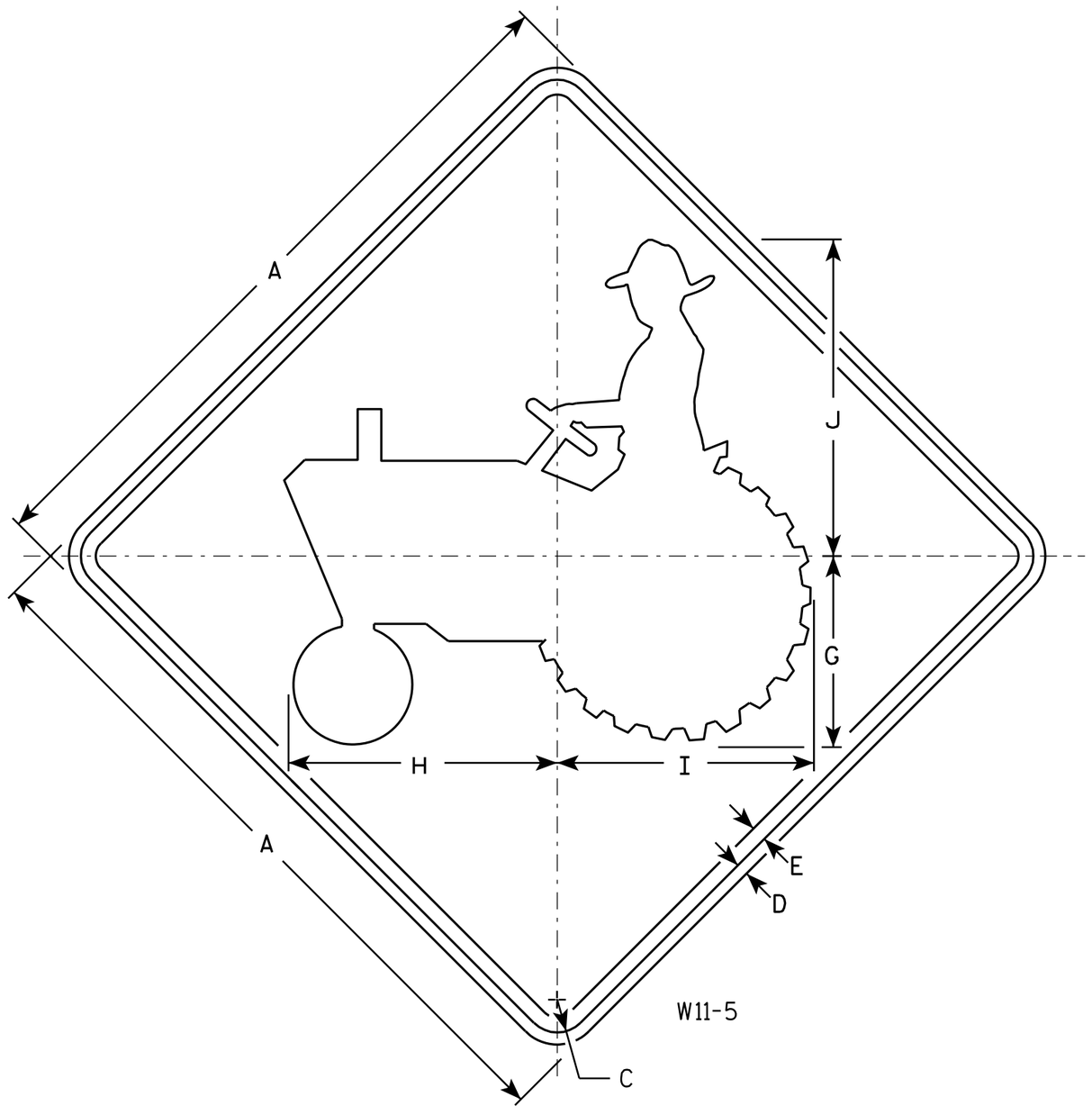

NOTES

1. Sign is Type II - Type H Reflective - reference WIS DOT Standard Specification for HIGHWAY and STRUCTURE CONSTRUCTION latest edition.
2. Color:
   Background - Yellow
   Message - Black
3. Corners may be square or rounded when base material is plywood but borders shall be rounded as shown. When base material is metal, the corners and borders shall be rounded.

SIZE	A	B	C	D	E	F	G	H	I	J	K	L	M	N	O	P	Q	R	S	T	U	V	W	X	Y	Z	Area sq. ft.
1	24		1 1/8	3/8	1/2		6 3/8	9	8 5/8	10 5/8																	4.0
2S	30		1 3/8	1/2	5/8		8	11 1/4	10 3/4	13 1/4																	6.25
2M	30		1 3/8	1/2	5/8		8	11 1/4	10 3/4	13 1/4																	6.25
3																											
4	36		1 5/8	5/8	3/4		9 5/8	13 1/2	12 7/8	16																	9.0
5	48		2 1/4	3/4	1		12 3/4	18	17 1/4	21 1/8																	16.0

STANDARD SIGN
W11-5

WISCONSIN DEPT OF TRANSPORTATION

APPROVED Matthew R Rauch
for State Traffic Engineer

DATE 3/16/11 PLATE NO. W11-5.5

PROJECT NO:	HWY:	COUNTY:		SHEET NO: 128	E

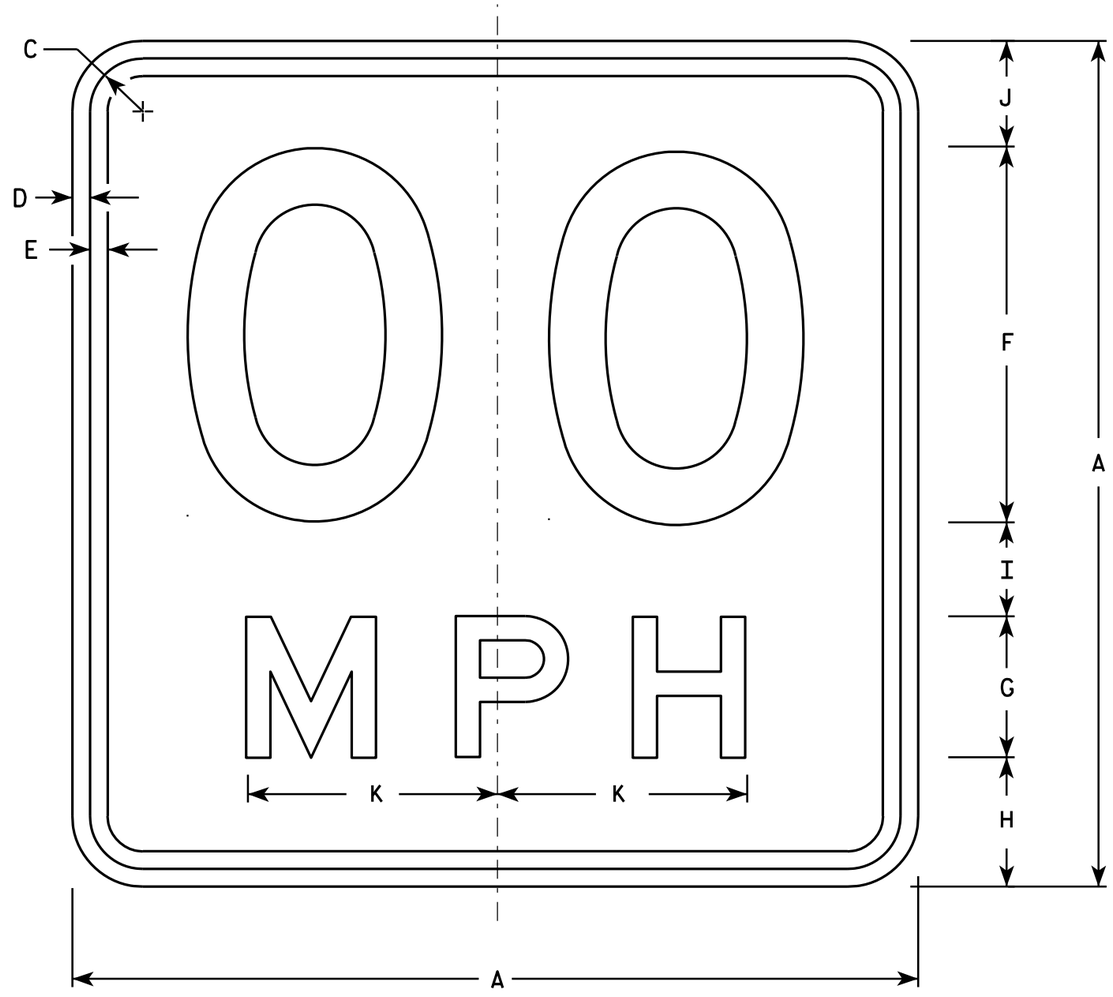

W13-1

* For 30" x 30" Warning Signs, use 18" x 18" W13-1 signs.
For 36" x 36" Warning Signs, use 24" x 24" W13-1 signs.

NOTES

1. Sign is Type II - Type F Reflective - reference WIS DOT Standard Specification for HIGHWAY and STRUCTURE CONSTRUCTION latest edition.
2. Color:
   Background - Yellow
   Message - Black
3. Message Series - See Note 6
4. Corners may be square or rounded when base material is plywood but borders shall be rounded as shown. When base material is metal, the corners and borders shall be rounded.
5. Substitute appropriate numerals and optically space about centerline to achieve proper balance.
6. Line 1 is Series D
   Line 2 is Series E

	SIZE	A	B	C	D	E	F	G	H	I	J	K	L	M	N	O	P	Q	R	S	T	U	V	W	X	Y	Z	Area sq. ft.
	1	18		1 1/8	3/8	3/8	8	3	2 3/4	2	2 1/4	5 3/8																2.25
*	2S	18		1 1/8	3/8	3/8	8	3	2 3/4	2	2 1/4	5 3/8																2.25
*	2M	18		1 1/8	3/8	3/8	8	3	2 3/4	2	2 1/4	5 3/8																2.25
	3	24		1 1/8	3/8	1/2	10	4	4	2 3/4	3 1/4	6 5/8																4.00
	4	36		1 5/8	5/8	3/4	16	6	5 1/2	4	4 1/2	10 5/8																9.00
	5	36		1 5/8	5/8	3/4	16	6	5 1/2	4	4 1/2	10 5/8																9.00

STANDARD SIGN
W13-1

WISCONSIN DEPT OF TRANSPORTATION

APPROVED Matthew R Rauch
For State Traffic Engineer

DATE 5/31/12 PLATE NO. W13-1.16

PROJECT NO: | HWY: | COUNTY: | SHEET NO: 129 | E

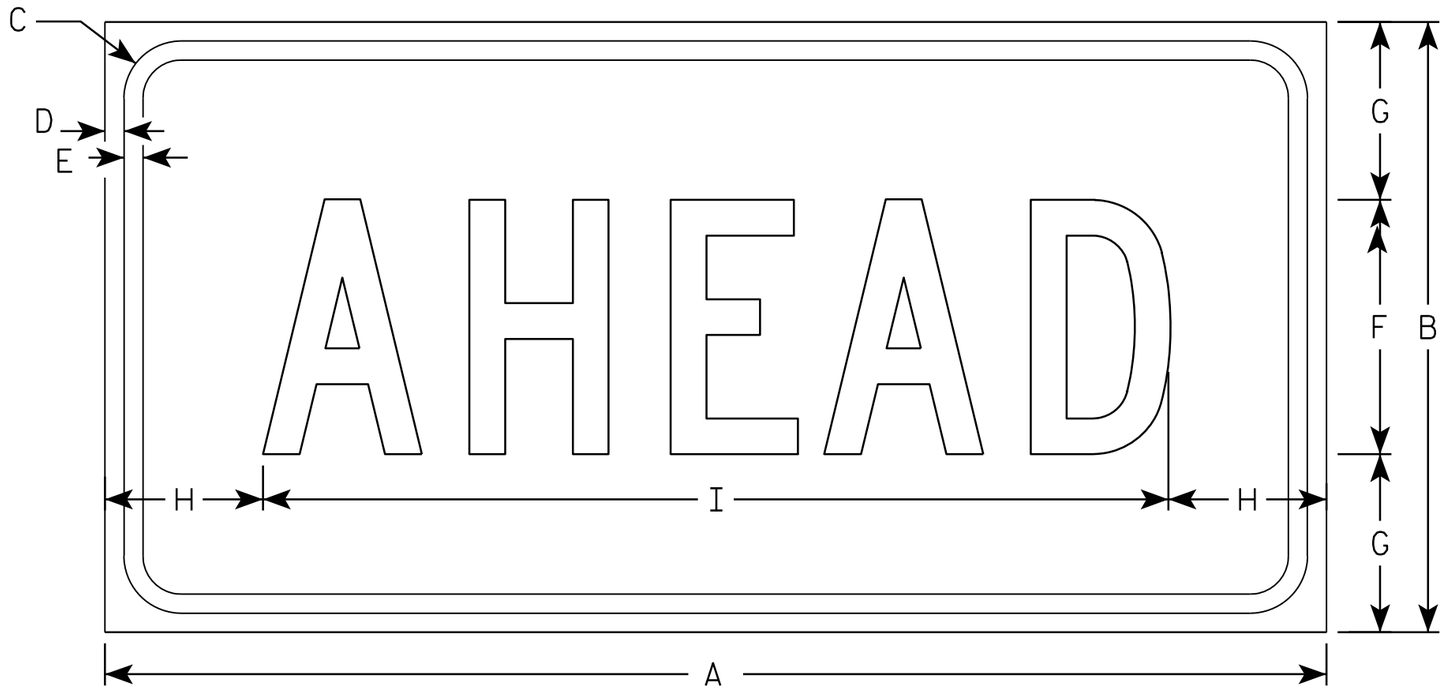

W16-9P

NOTES

1. Sign is Type II - Type F Reflective - reference WIS DOT Standard Specification for HIGHWAY and STRUCTURE CONSTRUCTION latest edition.
2. Color:
   Background - Yellow
   Message - Black
3. Message Series - C
4. Corners may be square or rounded when base material is plywood but borders shall be rounded as shown. When base material is metal, the corners and borders shall be rounded.

SIZE	A	B	C	D	E	F	G	H	I	J	K	L	M	N	O	P	Q	R	S	T	U	V	W	X	Y	Z	Area sq. ft.
1																											
2S	24	12	1 1/8	3/8	3/8	5	3 1/2	3 1/8	17 3/4																		2.0
2M	30	18	1 1/8	3/8	1/2	7	5 1/2	2 3/4	24 1/2																		3.75
3	30	18	1 1/8	3/8	1/2	7	3 1/2	2 3/4	24 1/2																		3.75
4	48	24	1 3/8	1/2	5/8	10	7	6 1/8	35 3/4																		8.0
5																											

STANDARD SIGN
W16-9P

WISCONSIN DEPT OF TRANSPORTATION

APPROVED Matthew R Rauch
for State Traffic Engineer

DATE 12/28/10 PLATE NO. W16-9P.6

PROJECT NO: | HWY: | COUNTY: | SHEET NO: 130 | E

CTH D, WESTBORO - RIB LAKE, TAYLOR COUNTY * EXPANDED 30% CONTINUED

STATION	END AREA CUT (SF)	END AREA FILL (SF)	VOLUME CUT (CY)	VOLUME *FILL (CY)	CUM VOLUME CUT (CY)	CUM VOLUME FILL (CY)	MASS HAUL (CY)
252+00	0	0.8	0	4	8066	18489	-10422
253+00	0	0.1	0	2	8066	18491	-10424
254+00	0	0.9	0	2	8066	18493	-10427
255+00	0	0	0	2	8066	18496	-10429
256+00	0	0.8	0	2	8066	18497	-10431
257+00	0	2	0	7	8066	18504	-10438
258+00	0	2.4	0	11	8066	18515	-10448
259+00	0	9.3	0	28	8066	18543	-10476
259+19	0	8.4	0	8	8066	18551	-10484
259+46	0	17.8	0	17	8066	18568	-10502
259+73	0	8.7	0	17	8066	18585	-10519
259+86	0	9.4	0	6	8066	18591	-10525
260+35	0	30.3	0	46	8066	18638	-10571
260+61	0	137.9	0	105	8066	18743	-10676
260+76	1425	206.8	404	127	8470	18870	-10400
260+87	0	303	285	133	8755	19002	-10247
261+00	0	335.5	0	203	8755	19205	-10450
261+51	0	36.9	0	461	8755	19666	-10911
261+78	0	47.9	0	55	8755	19721	-10966
262+06	0	56.4	0	68	8755	19789	-11034
262+95	0	22.7	0	171	8755	19960	-11205
263+21	0	36.2	0	37	8755	19997	-11242
263+47	0	32.7	0	43	8755	20040	-11285
263+78	0	28.3	0	45	8755	20085	-11330
264+00	0.1	20.3	0	26	8755	20111	-11356
265+00	0	7.5	0	67	8755	20178	-11422
266+00	0	3.6	0	27	8755	20205	-11449
266+98	1	2.3	2	14	8757	20219	-11461
267+23	0.2	3.3	1	3	8758	20222	-11464
268+00	1.6	0.9	3	8	8760	20230	-11469
269+00	0	8.3	3	22	8763	20252	-11489
270+00	0	15.3	0	57	8763	20309	-11545
271+00	0	6.5	0	52	8763	20361	-11598
272+00	0	2.2	0	21	8763	20382	-11619
272+46	0	3.8	0	7	8763	20389	-11625
272+60	0	5.1	0	3	8763	20392	-11628
273+00	0	0	0	5	8763	20397	-11633
274+00	0	0.5	0	1	8763	20398	-11635
275+00	0	5.8	0	15	8763	20413	-11650
276+00	0	2.3	0	20	8763	20433	-11669
277+00	0	7.1	0	23	8763	20455	-11692
278+00	0	2.1	0	22	8763	20477	-11714
279+00	0	1.3	0	8	8763	20486	-11722
280+00	0	2.3	0	9	8763	20494	-11731
281+00	0	0	0	6	8763	20500	-11736
282+00	0	0	0	0	8763	20500	-11736
283+00	0	0	0	0	8763	20500	-11736
284+00	0	3.5	0	8	8763	20508	-11745
285+00	0	2.9	0	15	8763	20524	-11760
285+27	0	3.5	0	4	8763	20528	-11764
285+54	0	6	0	6	8763	20534	-11770
286+00	0	10.3	0	18	8763	20552	-11789
287+00	0	22.5	0	79	8763	20631	-11868
288+00	0	27.3	0	120	8763	20751	-11988
289+00	0	18.7	0	111	8763	20862	-12098
290+00	0	7.6	0	63	8763	20925	-12162
290+45	0	17.3	0	27	8763	20952	-12189
290+72	0	21.3	0	25	8763	20977	-12213
290+98	0	18.6	0	26	8763	21002	-12239
291+12	0	21.7	0	13	8763	21016	-12252
291+50	0	21	0	39	8763	21055	-12291
291+77	0	16	0	24	8763	21078	-12315
292+03	0	5.4	0	14	8763	21092	-12329
292+61	0	66.7	0	99	8763	21191	-12428
293+05	0	4.4	0	77	8763	21268	-12505
293+32	0	2	0	4	8763	21272	-12509
293+60	0	16	0	12	8763	21284	-12521
294+00	0	7.5	0	23	8763	21307	-12544
295+00	0	1	0	20	8763	21327	-12564
296+00	0	3	0	10	8763	21337	-12574
297+00	0	88.5	0	220	8763	21557	-12794
297+26	0	52.1	0	88	8763	21646	-12882
297+53	0	9.6	0	40	8763	21685	-12922
298+00	0	24.8	0	39	8763	21724	-12961
299+00	0	16.2	0	99	8763	21823	-13060
300+00	0	11.4	0	66	8763	21890	-13126
301+00	0	8.6	0	48	8763	21938	-13174

CTH D, WESTBORO - RIB LAKE, TAYLOR COUNTY * EXPANDED 30% CONTINUED

STATION	END AREA CUT (SF)	END AREA FILL (SF)	VOLUME CUT (CY)	VOLUME *FILL (CY)	CUM VOLUME CUT (CY)	CUM VOLUME FILL (CY)	MASS HAUL (CY)
301+50	0	6.5	0	18	8763	21956	-13192
301+76	0	10	0	10	8763	21966	-13203
302+02	0	12.5	0	14	8763	21980	-13217
303+00	0	5	0	41	8763	22022	-13258
304+00	0	5.9	0	26	8763	22048	-13284
304+73	0	8.6	0	25	8763	22073	-13310
305+00	0	4.5	0	9	8763	22082	-13318
306+00	0	2.9	0	18	8763	22100	-13336
307+00	0	6.4	0	22	8763	22122	-13359
307+46	0	14.2	0	23	8763	22145	-13381
307+72	0	22	0	23	8763	22168	-13404
307+99	0	7.3	0	19	8763	22187	-13424
309+00	0	54.7	0	150	8763	22337	-13574
309+19	0.6	106.5	0	74	8764	22411	-13648
310+03	0	3.1	1	222	8765	22633	-13869
310+30	0	4.4	0	5	8765	22638	-13873
310+57	0	6.6	0	7	8765	22645	-13881
310+75	0	14	0	9	8765	22654	-13889
311+00	0	10.9	0	15	8765	22669	-13904
312+00	0.8	6.1	1	41	8766	22710	-13944
313+00	0	5.8	1	29	8767	22738	-13971
314+00	0	12.9	0	45	8767	22783	-14016
315+00	0	4.9	0	43	8767	22826	-14059
316+00	0	5.8	0	26	8767	22852	-14085
316+40	0.5	26	0	31	8768	22883	-14115
316+53	0	35.9	0	19	8768	22902	-14134
317+00	0	33.4	0	78	8768	22980	-14212
318+00	0	31.3	0	156	8768	23136	-14368
319+00	0	3.1	0	83	8768	23219	-14451
320+00	0	0	0	7	8768	23226	-14458
321+00	0	0	0	0	8768	23226	-14458
322+00	0	0.5	0	1	8768	23227	-14459
322+39	0	8.5	0	8	8768	23236	-14468
323+00	0	4.7	0	19	8768	23255	-14487
324+00	0	33.5	0	92	8768	23347	-14579
325+00	0.7	8	1	100	8769	23447	-14678
326+00	0	6.7	1	35	8771	23482	-14712
327+00	0	0.6	0	18	8771	23500	-14729
328+00	0	0.7	0	3	8771	23503	-14733
329+00	0	0.3	0	2	8771	23506	-14735
330+00	0	0	0	1	8771	23506	-14736
331+00	0	0.3	0	1	8771	23507	-14736
332+00	0	2.7	0	7	8771	23514	-14744
333+00	0	3.4	0	15	8771	23529	-14758
334+00	0	5.1	0	20	8771	23549	-14779
335+00	0	6.7	0	28	8771	23578	-14807
336+00	0	2	0	21	8771	23599	-14828
337+02	0	10	0	29	8771	23628	-14858
337+79	0	10.4	0	38	8771	23666	-14895
338+00	0	4.4	0	7	8771	23673	-14903
339+00	0	3.8	0	20	8771	23693	-14923
340+00	0	13.5	0	42	8771	23735	-14964
341+00	0	8.3	0	52	8771	23787	-15017
342+00	0	106.9	0	277	8771	24065	-15294
342+25	0	152	0	156	8771	24221	-15450
342+49	0	148.5	0	174	8771	24394	-15624
342+75	0	120.8	0	165	8771	24559	-15789
342+99	0	118.8	0	144	8771	24703	-15933
343+33	0	146.4	0	212	8771	24915	-16144
343+41	0	111.7	0	50	8771	24965	-16195
343+49	0	28.9	0	28	8771	24993	-16223
343+74	0	58.1	0	53	8771	25046	-16275
343+83	0	111.9	0	37	8771	25083	-16312
344+00	0	56.2	0	70	8771	25152	-16382
344+25	0	32.1	0	54	8771	25206	-16435
344+51	0	28.4	0	37	8771	25242	-16472
345+00	0	25.8	0	64	8771	25307	-16536
345+21	0.3	45.6	0	36	8771	25343	-16572
346+00	0.2	25.3	1	135	8771	25478	-16706
346+94	0	16.3	0	94	8772	25572	-16800
348+00	0	6.6	0	58	8772	25630	-16859
349+00	0	5.3	0	29	8772	25659	-16887
349+45	0	6.7	0	13	8772	25672	-16900
350+00	0	5	0	15	8772	25688	-16916
351+00	0	4.6	0	23	8772	25711	-16939
352+00	0	0.5	0	12	8772	25723	-16951
352+33	0	13.2	0	11	8772	25734	-16962

CTH D, WESTBORO - RIB LAKE, TAYLOR COUNTY * EXPANDED 30% CONTINUED

STATION	END AREA CUT (SF)	END AREA FILL (SF)	VOLUME CUT (CY)	VOLUME *FILL (CY)	CUM VOLUME CUT (CY)	CUM VOLUME FILL (CY)	MASS HAUL (CY)
353+00	0	3.6	0	27	8772	25761	-16989
354+00	0	9.9	0	33	8772	25793	-17022
355+00	0	12.7	0	54	8772	25848	-17076
356+00	0	0.2	0	31	8772	25879	-17107
357+00	0	0.3	0	1	8772	25880	-17108
358+00	0	2.8	0	7	8772	25888	-17116
359+00	0	3.9	0	16	8772	25904	-17132
359+61	0	37.4	0	61	8772	25964	-17193
359+70	0	16.8	0	12	8772	25976	-17204
359+84	0	24.5	0	14	8772	25990	-17218
360+00	0	9.1	0	13	8772	26003	-17231
361+08	0	2.3	0	30	8772	26032	-17261
362+00	0	1.2	0	8	8772	26040	-17268
362+54	0	14	0	20	8772	26060	-17288
363+00	0	30.2	0	49	8772	26109	-17337
364+00	0	23.6	0	130	8772	26238	-17467
365+00	0	6.7	0	73	8772	26311	-17540
366+00	0	1.9	0	21	8772	26332	-17560
366+44	0	6.3	0	9	8772	26341	-17569
367+00	0	4.9	0	15	8772	26356	-17584
368+00	0	1.7	0	16	8772	26372	-17600
369+00	0	3.8	0	13	8772	26385	-17613
370+00	0	25.6	0	71	8772	26456	-17684
370+47	0	51.7	0	87	8772	26543	-17771
370+66	0	50.1	0	46	8772	26589	-17817
370+74	0	36.8	0	16	8772	26605	-17834
370+92	0	41.9	0	35	8772	26641	-17869
371+00	0	24.6	0	12	8772	26653	-17882
371+19	0	26.5	0	23	8772	26677	-17905
371+93	72.7	26.1	100	94	8872	26770	-17899
373+00	0	7.4	144	86	9016	26857	-17841
373+19	0	26.1	0	15	9016	26872	-17856
373+27	0	30.2	0	10	9016	26882	-17867
373+45	0	35.8	0	30	9016	26912	-17897
373+53	0	39.7	0	14	9016	26926	-17911
373+72	0	42.8	0	37	9016	26964	-17948
374+00	0	20.6	0	43	9016	27007	-17991
375+00	0	0.1	0	50	9016	27056	-18041
375+56	0	6.6	0	9	9016	27065	-18050
376+00	0	0.7	0	8	9016	27073	-18058
376+11	0	1.4	0	1	9016	27074	-18058
376+50	0	0	0	1	9016	27075	-18059
377+00	0	1.2	0	1	9016	27077	-18061
377+50	0	1.9	0	4	9016	27080	-18065
378+00	0	2.1	0	5	9016	27085	-18069
378+50	0	12.4	0	17	9016	27103	-18087
379+00	0	44.7	0	69	9016	27171	-18156
379+50	0	24.3	0	83	9016	27254	-18239
380+00	0	1.3	0	31	9016	27285	-18269
380+50	0	0.7	0	2	9016	27288	-18272
380+66	0	4.4	0	2	9016	27289	-18274
381+00	0	1	0	4	9016	27294	-18278
381+20	0	2.5	0	2	9016	27296	-18280
381+50	0	9.4	0	9	9016	27304	-18288
382+00	0	26.6	0	43	9016	27348	-18332
382+50	0	0.2	0	32	9016	27380	-18364
382+64	0	3.1	0	1	9016	27381	-18365
383+00	0	11.9	0	13	9016	27394	-18378
383+50	0	2.7	0	18	9016	27411	-18396
383+90	0	2.6	0	5	9016	27417	-18401
384+00	0	0.5	0	1	9016	27417	-18402
384+50	0	0.6	0	1	9016	27419	-18403
384+71	0	2.9	0	2	9016	27420	-18405
385+00	0	0.2	0	2	9016	27423	-18407
385+50	0	0.1	0	0	9016	27423	-18407
385+70	0	14.3	0	7	9016	27430	-18414
386+00	0	0.7	0	11	9016	27441	-18425
386+50	0	2.7	0	4	9016	27445	-18429
387+00	0	7	0	12	9016	27456	-18441
387+50	0	0	0	8	9016	27465	-18449
388+00	0	0.8	0	1	9016	27466	-18450
388+50	0	1.9	0	3	9016	27469	-18453
389+00	0	2.9	0	6	9016	27475	-18459
389+50	0	4.5	0	9	9016	27484	-18468
390+00	0	5.7	0	12	9016	27496	-18480
390+50	0	2.8	0	10	9016	27506	-18491
391+00	0	3	0	7	9016	27513	-18498

**MARSH EXCAVATION AND FILL NOT INCLUDED

CTH D, WESTBORO - RIB LAKE, TAYLOR COUNTY * EXPANDED 30%

STATION	END AREA CUT (SF)	END AREA FILL (SF)	VOLUME CUT (CY)	VOLUME *FILL (CY)	CUM VOLUME CUT (CY)	CUM VOLUME FILL (CY)	MASS HAUL (CY)
100+75	35.6	0.3	0	0	0	0	0
101+00	37	0	34	0	34	0	33
101+30	43.4	2.6	45	2	78	2	76
101+57	59.2	0	51	2	130	4	126
101+63	64	0	14	0	143	4	140
102+00	59.6	0	85	0	228	4	224
102+50	38	5.1	90	6	318	10	308
103+06	59.4	0.7	101	8	419	18	402
103+58	53	22.9	108	29	527	47	480
104+00	53.3	6.2	83	29	610	77	534
105+00	73.3	0	234	15	845	92	753
106+04	58.1	1.3	253	3	1098	95	1003
106+16	53.4	1.9	25	1	1123	96	1027
107+00	64.6	1	184	6	1306	102	1204
107+10	66.3	1	24	0	1330	102	1228
108+00	54.8	6.8	202	17	1532	119	1413
108+20	60.5	7	43	7	1575	126	1449
108+49	71.1	0	72	5	1646	131	1516
109+00	54.3	0	118	0	1764	131	1633
109+57	71.1	0	132	0	1896	131	1766
110+00	71.6	0	114	0	2010	131	1879
110+46	74.7	0.3	125	0	2135	131	2004
110+89	80	0	123	0	2258	131	2127
111+00	23	0	21	0	2279	131	2148
111+69	24.3	1.4	60	2	2339	134	2206
112+00	19.1	0	25	1	2364	135	2230
113+00	12.9	14.9	59	36	2423	171	2253
113+36	20.9	22.8	23	33	2446	203	2243
114+00	10.1	40	37	97	2483	300	2183
114+06	9.6	46.5	2	12	2485	312	2173
114+11	8.9	48.1	2	12	2487	325	2162
114+33	7.7	51.5	7	53	2493	377	2116
114+37	7.5	52.4	1	10	2495	387	2107
114+60	10.5	24.3	8	43	2502	430	2072
114+63	10.3	26.8	1	4	2503	434	2070
116+00	0.9	36.4	28	208	2532	641	1890
116+18	0	28	0	28	2532	670	1863
116+22	0	28.4	0	5	2532	675	1858
116+44	0	25.4	0	29	2532	704	1828
116+49	0	24.9	0	6	2532	710	1823
116+70	0	27.8	0	27	2532	736	1796
116+76	0	28	0	8	2532	744	1788
116+87	0	44.2	0	19	2532	763	1769
117+00	0	1.8	0	14	2532	777	1755
117+62	13.8	26.9	16	43	2548	821	1727
118+00	0	12.8	10	36	2558	857	1701
118+22	0	9.8	0	12	2558	869	1689
119+00	0	1.9	0	22	2558	890	1667
119+49	0	4.9	0	8	2558	898	1659
120+00	0	8.4	0	16	2558	915	1643
121+00	0	4.1	0	30	2558	945	1613
121+49	0	10.3	0	17	2558	962	1596
122+00	0	3.4	0	17	2558	979	1579
123+00	0	0	0	8	2558	987	1571
123+21	0	0	0	0	2558	987	1571
124+00	0	29.7	0	56	2558	1043	1514
124+37	0	27.8	0	51	2558	1095	1463
124+45	0.1	17.7	0	9	2558	1103	1454
125+00	0	23.1	0	54	2558	1157	1400
126+00	0	11.8	0	84	2558	1241	1316
126+22	0	8.8	0	11	2558	1252	1305
127+00	0	4.8	0	26	2558	1278	1280
127+56	0	5	0	13	2558	1291	1267
128+00	0	0.3	0	6	2558	1297	1261
128+91	0	5.3	0	12	2558	1309	1249
130+00	0	6.5	0	31	2558	1340	1218
131+00	0	3.8	0	25	2558	1365	1193
131+27	0	5.4	0	6	2558	1371	1187
132+00	0	10.5	0	28	2558	1399	1159
133+00	0	4.7	0	37	2558	1435	1122
133+24	0	11.4	0	9	2558	1445	1113
133+78	0	25.7	0	48	2558	1493	1065
134+00	0	13.5	0	21	2558	1514	1044
135+00	0	2.6	0	39	2558	1552	1005
136+00	0	23.9	0	64	2558	1616	942
136+08	0	27.6	0	9	2558	1626	932
136+45	0	28	0	50	2558	1676	882

CTH D, WESTBORO - RIB LAKE, TAYLOR COUNTY * EXPANDED 30% CONTINUED

STATION	END AREA CUT (SF)	END AREA FILL (SF)	VOLUME CUT (CY)	VOLUME *FILL (CY)	CUM VOLUME CUT (CY)	CUM VOLUME FILL (CY)	MASS HAUL (CY)
137+00	0	15.1	0	57	2558	1733	825
137+34	0	11.1	0	21	2558	1754	804
137+67	0	6.3	0	14	2558	1768	790
138+00	0	7.3	0	11	2558	1779	779
139+00	0	5.4	0	31	2558	1809	748
140+00	0	1.8	0	17	2558	1827	731
140+23	0	2.2	0	2	2558	1829	729
141+00	0	1.9	0	8	2558	1836	721
142+00	0	9.3	0	27	2558	1863	694
142+40	0	10.4	0	19	2558	1882	675
143+00	0	1	0	16	2558	1899	659
143+21	0	2.1	0	2	2558	1900	657
144+00	0	0.2	0	4	2558	1905	653
144+38	0	0.9	0	1	2558	1906	652
144+51	0	7.6	0	3	2558	1908	649
145+00	0	0.5	0	10	2558	1918	640
146+00	0	1.5	0	5	2558	1923	635
146+66	0	4.6	0	10	2558	1933	625
147+00	0	4.1	0	7	2558	1940	618
147+63	0	7.7	0	18	2558	1958	600
148+00	0	4.5	0	11	2558	1968	589
149+00	0	4.5	0	22	2558	1990	568
149+38	0	26.6	0	28	2558	2019	539
150+00	0	3.9	0	46	2558	2064	494
151+00	0	6	0	24	2558	2088	470
152+00	0	2.2	0	20	2558	2108	450
152+23	0	4.2	0	4	2558	2111	447
152+65	0	5.6	0	10	2558	2121	437
153+00	0	2.5	0	7	2558	2128	430
154+00	0	1.1	0	9	2558	2137	421
155+00	0	2.4	0	8	2558	2145	413
156+00	0	3.1	0	13	2558	2158	400
157+00	0	7.6	0	26	2558	2184	374
157+11	2.2	10.2	0	4	2558	2188	370
158+00	0	6.8	4	37	2562	2225	337
159+00	0	5.1	0	29	2562	2254	308
159+66	0	12.7	0	28	2562	2282	280
160+00	0	8.2	0	17	2562	2299	263
161+00	0	7.9	0	39	2562	2338	224
161+15	0	9.6	0	6	2562	2344	218
162+00	0	6.2	0	32	2562	2377	185
162+45	0	43.2	0	53	2562	2430	132
163+00	0	2.9	0	61	2562	2491	71
164+00	0	2	0	12	2562	2503	59
164+46	0	18.6	0	23	2562	2526	36
164+68	0	29.5	0	25	2562	2551	11
165+07	0	30.1	0	57	2562	2608	-46
166+00	0	2.1	0	72	2562	2679	-118
167+00	0	4.5	0	16	2562	2695	-134
168+00	0	6.1	0	26	2562	2721	-159
169+00	13.3	0	25	15	2586	2736	-149
170+00	8.1	0	40	0	2626	2736	-110
170+42	2.7	3.4	8	3	2634	2739	-105
171+00	3.1	1.2	6	6	2641	2745	-105
172+02	5.4	0	16	3	2657	2748	-92
173+00	51.4	1.9	104	5	2760	2753	7
174+00	83.6	0	250	5	3010	2757	253
175+00	126.8	0	390	0	3400	2757	642
176+00	208.6	0	621	0	4021	2757	1264
176+49	243.4	0	410	0	4431	2757	1674
177+00	233.6	0	451	0	4882	2757	2124
178+00	129.8	0	673	0	5555	2757	2797
179+00	40.2	25.6	315	62	5869	2819	3050
180+00	32.2	73.1	134	238	6003	3057	2947
180+44	0.7	102.72	27	185	6030	3242	2788
181+00	37.2	69.2	40	233	6070	3475	2595
182+00	30.4	87	125	376	6195	3851	2344
183+00	105.8	0	252	209	6447	4060	2387
184+00	5.9	0	207	0	6654	4060	2594
185+00	2.7	2.7	16	7	6670	4067	2603
186+08	1	129.9	7	345	6677	4411	2266
187+00	0	49	2	396	6679	4808	1871
188+00	0	105.8	0	373	6679	5180	1499
189+00	0	139.8	0	591	6679	5772	907
189+51	300	217.3	283	438	6962	6210	752
190+00	0	244.5	272	545	7234	6755	480
191+00	0	243.9	0	1176	7234	7931	-696

CTH D, WESTBORO - RIB LAKE, TAYLOR COUNTY * EXPANDED 30% CONTINUED

STATION	END AREA CUT (SF)	END AREA FILL (SF)	VOLUME CUT (CY)	VOLUME *FILL (CY)	CUM VOLUME CUT (CY)	CUM VOLUME FILL (CY)	MASS HAUL (CY)
192+00	0	19.3	0	634	7234	8564	-1330
193+00	2.7	1.3	5	50	7239	8614	-1374
194+00	0	7.4	5	21	7244	8635	-1390
194+78	0	8.3	0	29	7244	8664	-1420
195+00	0	3.7	0	6	7244	8671	-1426
195+48	0	38.1	0	48	7244	8719	-1474
196+00	0	108.7	0	184	7244	8903	-1658
196+63	0	295.2	0	608	7244	9510	-2266
197+00	0	244.3	0	487	7244	9997	-2753
198+00	0	36.4	0	676	7244	10673	-3429
198+65	0	9.1	0	71	7244	10744	-3499
199+25	13.4	0	15	13	7259	10757	-3498
200+00	59.8	0	102	0	7361	10757	-3396
201+00	0	114.1	111	275	7472	11032	-3560
202+00	0	114.8	0	551	7472	11583	-4111
203+00	0	73.2	0	453	7472	12035	-4564
203+67	0	74.9	0	240	7472	12276	-4804
204+00	0	75.8	0	118	7472	12394	-4922
205+00	0	66.5	0	343	7472	12737	-5265
206+00	0	77.9	0	348	7472	13084	-5612
207+00	0	36	0	274	7472	13358	-5887
208+00	0	11.8	0	115	7472	13473	-6002
208+60	17.1	11.7	19	34	7491	13507	-6017
209+00	0	20.9	13	31	7504	13539	-6035
210+00	0	45.3	0	159	7504	13698	-6195
211+00	0	71.9	0	282	7504	13980	-6477
212+00	0	127.9	0	481	7504	14461	-6958
213+00	0	64.6	0	463	7504	14925	-7421
213+62	0	15.5	0	120	7504	15044	-7541
214+00	2.5	6.2	2	20	7505	15064	-7559
215+00	18.3	3.8	39	24	7544	15088	-7544
216+00	21.3	0.3	73	10	7617	15098	-7481
216+25	2.9	0.2	11	0	7628	15098	-7470
217+00	10.8	17.3	19	32	7647	15130	-7483
218+00	0	44.6	20	149	7667	15279	-7612
218+82	0	62	0	210	7667	15489	-7822
219+00	0	54.8	0	51	7667	15540	-7873
220+00	0	17.7	0	175	7667	15715	-8047
221+00	69.1	3	128	50	7795	15764	-7969
222+00	3.3	5	134	19	7929	15784	-7854
223+00	0	147.3	6	367	7936	16150	-8215
223+15	0	161.8	0	111	7936	16261	-8326
224+00	0	109.7	0	556	7936	16817	-8882
224+77	0	5.9	0	214	7936	17032	-9096
225+00	7.3	0.1	3	3	7939	17035	-9096
226+00	0	12.7	14	31	7952	17066	-9114
227+01	0.1	7.1	0	48	7952	17114	-9162
227+38	0	5.1	0	11	7952	17125	-9172
228+00	0	3.4	0	13	7952	17138	-9185
229+00	0	22.3	0	62	7952	17199	-9247
230+00	0	45.6	0	163	7952	17363	-9410
231+00	0	14	0	143	7952	17506	-9554
232+00	0	10.2	0	58	7952	17565	-9612
233+00	0	8.2	0	44	7952	17609	-9657
233+67	0	7.6	0	25	7952	17634	-9682
234+00	0	0.5	0	6	7952	17641	-9688
235+00	0	25.7	0	63	7952	17704	-9752
236+00	0	0.1	0	62	7952	17766	-9814
237+00	9.4	5.7	17	14	7970	17780	-9810
238+00	0	13.6	17	46	7987	17826	-9839
238+41	0	47.4	0	59	7987	17886	-9899
239+00	0	26.3	0	106	7987	17992	-10004
240+00	0.9	14.4	2	98	7989	18089	-10101
241+00	10.2	2.6	21	41	8009	18130	-10121
242+00	9.4	1.1	36	9	8046	18139	-10094
243+00	0.4	6.8	18	19	8064	18158	-10094
244+00	0.5	12.2	2	46	8066	18204	-10139
245+00	0	7.3	1	47	8066	18251	-10185
245+77	0	7.3	0	27	8066	18278	-10212
246+00	0	1.2	0	5	8066	18283	-10216
247+00	0	3.9	0	12	8066	18295	-10229
248+00	0	3.4	0	18	8066	18313	-10246
248+03	0	8.7	0	1	8066	18314	-10247
249+00	0	24.6	0	78	8066	18391	-10325
249+51	0	7.1	0	39	8066	18430	-10364
250+00	0	12.4	0	23	8066	18453	-10387
251+00	0	0.8	0	32	8066	18485	-10418

**MARSH EXCAVATION AND FILL NOT INCLUDED

CTH D, WESTBORO - RIB LAKE, TAYLOR COUNTY | * EXPANDED 30% | CONTINUED

STATION	END AREA CUT (SF)	END AREA FILL (SF)	VOLUME CUT (CY)	VOLUME *FILL (CY)	CUM VOLUME CUT (CY)	CUM VOLUME FILL (CY)	MASS HAUL (CY)
391+50	0	1.2	0	5	9016	27518	-18503
392+00	0	0	0	1	9016	27520	-18504
392+50	0	0	0	0	9016	27520	-18504
393+00	0	0	0	0	9016	27520	-18504
393+37	0.3	0.2	0	0	9016	27520	-18504
393+50	0	0	0	0	9016	27520	-18504
394+00	0	0	0	0	9016	27520	-18504
394+50	0	0	0	0	9016	27520	-18504
394+79	0	5.2	0	4	9016	27524	-18508
395+07	0	3.7	0	6	9016	27530	-18514
395+50	0	7.7	0	12	9016	27541	-18525
396+00	0	7.4	0	18	9016	27560	-18544
396+50	0	4.5	0	14	9016	27574	-18558
396+89	0	4.5	0	8	9016	27582	-18566
397+50	0	1.1	0	8	9016	27591	-18575
398+00	0	2.2	0	4	9016	27595	-18579
398+15	0	3.8	0	2	9016	27597	-18581
398+50	0	3.9	0	6	9016	27603	-18587
398+91	0	7.1	0	11	9016	27614	-18598
399+50	0	1.5	0	12	9016	27626	-18610
399+74	0	6.5	0	5	9016	27631	-18615
400+05	0	3.1	0	7	9016	27638	-18622
400+50	0	0.9	0	4	9016	27642	-18626
401+00	0	0.6	0	2	9016	27644	-18628
401+50	0	0.9	0	2	9016	27646	-18630
402+00	0	1.4	0	3	9016	27649	-18633
402+39	0	3.4	0	5	9016	27653	-18637
403+00	0	0.7	0	6	9016	27659	-18643
403+50	0	0.9	0	2	9016	27661	-18645
404+00	0	2.1	0	4	9016	27665	-18649
404+51	0	8	0	12	9016	27677	-18661
405+02	0	2.3	0	13	9016	27690	-18674
405+40	0	1.8	0	4	9016	27694	-18678
406+00	0	0.6	0	3	9016	27697	-18681
406+50	0	0.5	0	1	9016	27698	-18682
406+78	0.1	1.6	0	1	9016	27700	-18684
407+00	0	1	0	1	9016	27701	-18685
407+50	0	2.1	0	4	9016	27705	-18689
408+00	0	5	0	9	9016	27714	-18697
408+50	0	4.8	0	12	9016	27725	-18709
409+08	0	3.9	0	12	9016	27737	-18721
409+50	0	8	0	12	9016	27749	-18733
410+00	0	5	0	16	9016	27765	-18749
410+50	0.2	1.6	0	8	9016	27773	-18757
411+00	0.4	1.1	1	3	9017	27776	-18760
411+50	0	1.7	0	3	9017	27780	-18763
412+18	0	1.7	0	6	9017	27785	-18768
412+50	0	5.3	0	5	9017	27791	-18773
413+00	0	8.3	0	16	9017	27807	-18790
413+53	0	0.7	0	11	9017	27818	-18801
413+77	0	8.7	0	5	9017	27824	-18807
414+00	0	12.8	0	12	9017	27836	-18819
414+50	0	9.5	0	27	9017	27863	-18845
415+00	0	4.6	0	17	9017	27880	-18862
415+29	0	6.4	0	8	9017	27887	-18870
415+50	0	2.3	0	4	9017	27892	-18875
416+00	0	3.7	0	7	9017	27899	-18882
416+50	0	16.3	0	24	9017	27923	-18906
417+00	0	3.6	0	24	9017	27947	-18930
417+50	0	0.7	0	5	9017	27952	-18935
418+00	0	0.2	0	1	9017	27953	-18936
418+50	0	1.2	0	2	9017	27955	-18938
418+81	0	5.2	0	5	9017	27960	-18943
419+00	0	0.5	0	3	9017	27962	-18945
419+50	0	0.4	0	1	9017	27963	-18946

**MARSH EXCAVATION AND FILL NOT INCLUDED

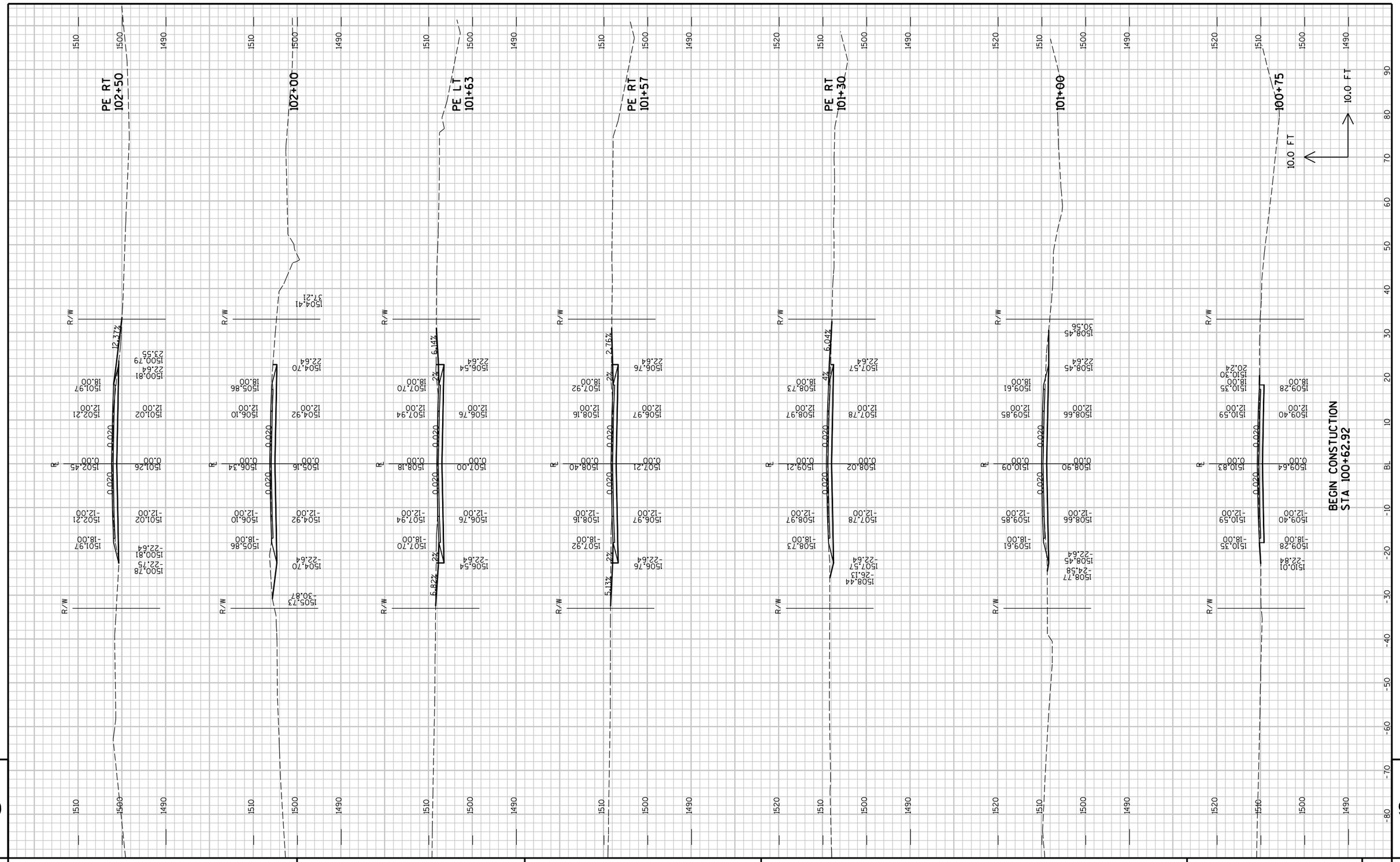

PROJECT NO : 8900-06-76	HWY : C.T.H. D	COUNTY : TAYLOR	CROSS SECTIONS - C.T.H. D	SHEET NO: 134	E

FILE NAME : P:\PT\T\Tayhd\108326\CAD\XBTAYD01.dgn PLOT TIME : 10:51:49 AM PLOT DATE : 1/30/2013 PLOT BY : SEH PLOT NAME : PLOT SCALE : N/A

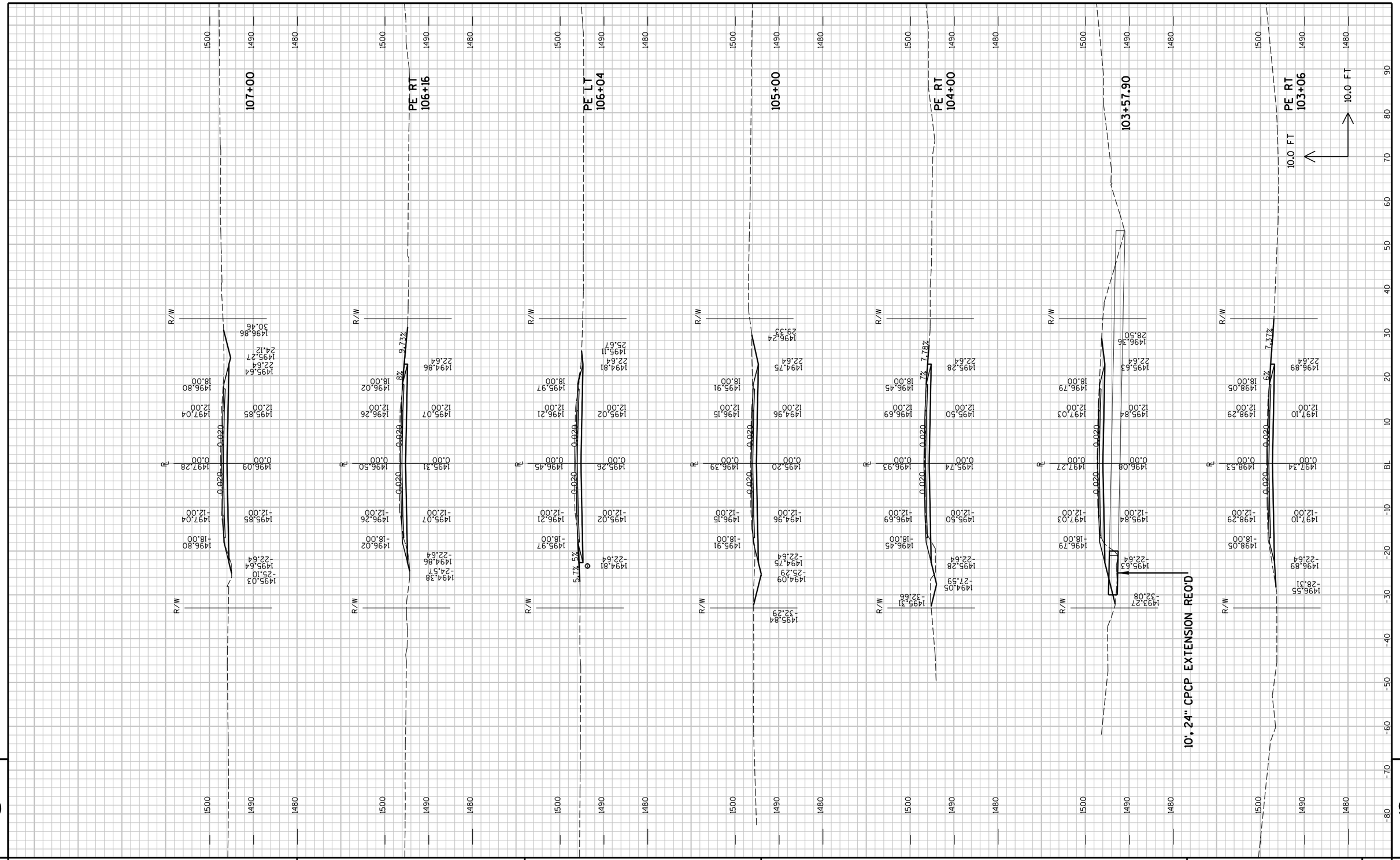

9

9

PROJECT NO : 8900-06-76	HWY : C.T.H. D	COUNTY : TAYLOR	CROSS SECTIONS - C.T.H. D	SHEET NO:	E

FILE NAME : P:\PT\T\Tayhd\108326\CAD\XBTAYD01.dgn PLOT TIME : 10:51:49 AM PLOT DATE : 1/30/2013 PLOT BY : SEH PLOT NAME : PLOT SCALE : N/A

PE RT
109+57

109+00

LEONARD LANE LT
108+49.34

PE RT
108+20

108+00

PE RT
107+10

10.0 FT

10.0 FT

PROJECT NO : 8900-06-76	HWY : C.T.H. D	COUNTY : TAYLOR	CROSS SECTIONS - C.T.H. D	SHEET NO: 136	E

FILE NAME : P:\PT\T\Tayhd\108326\CAD\XBTAYD01.dgn PLOT TIME : 10:51:49 AM PLOT DATE : 1/30/2013 PLOT BY : SEH PLOT NAME : PLOT SCALE : N/A

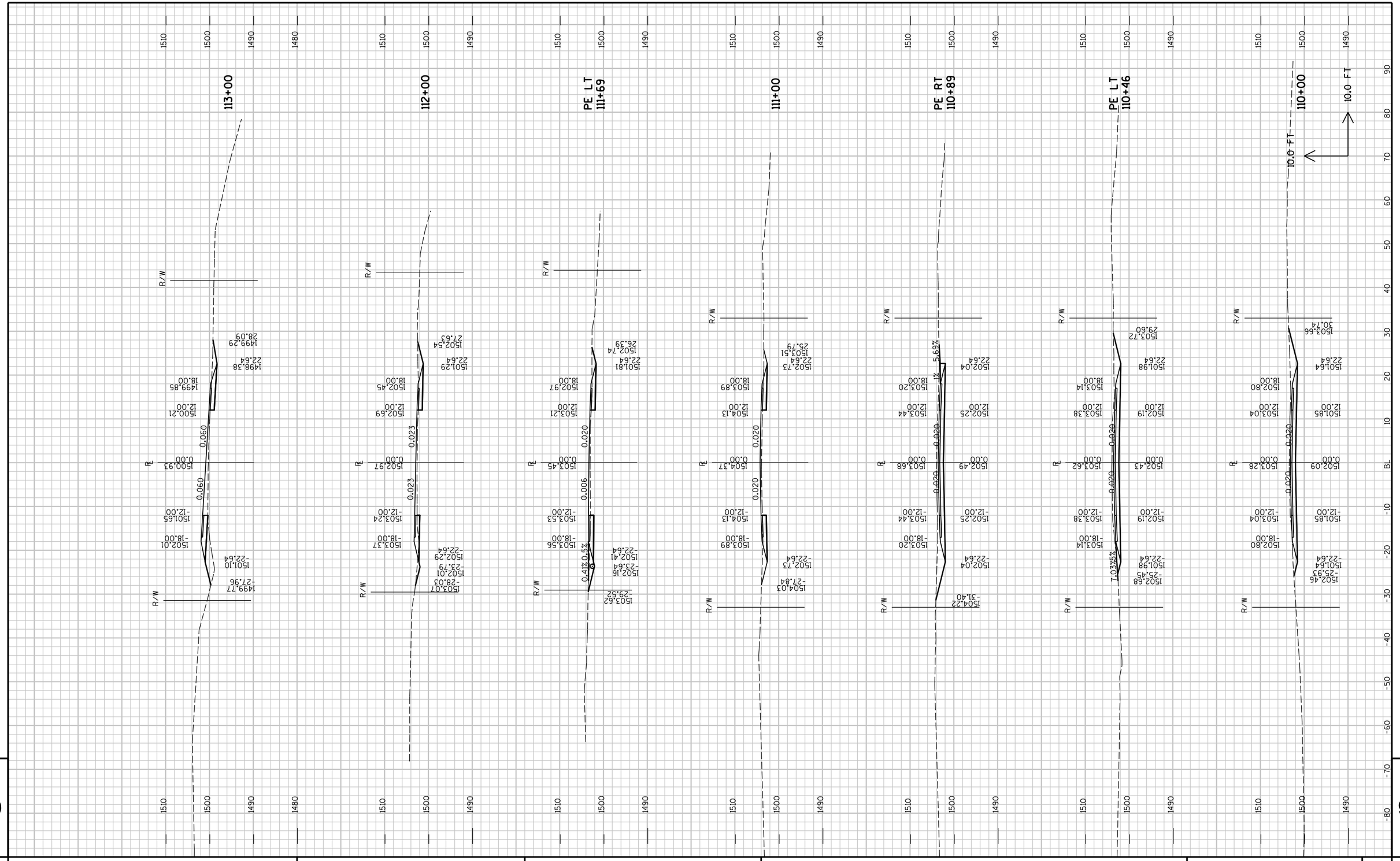

PROJECT NO : 8900-06-76	HWY : C.T.H. D	COUNTY : TAYLOR	CROSS SECTIONS - C.T.H. D	SHEET NO: 137	E

FILE NAME : P:\PT\T\Tayhd\108326\CAD\XBTAYD01.dgn PLOT TIME : 10:51:49 AM PLOT DATE : 1/30/2013 PLOT BY : SEH PLOT NAME : PLOT SCALE : N/A

PROJECT NO : 8900-06-76	HWY : C.T.H. D	COUNTY : TAYLOR	CROSS SECTIONS - C.T.H. D	SHEET NO:	E

FILE NAME : P:\PT\T\Tayhd\108326\CAD\XBTAYD01.dgn PLOT TIME : 10:51:50 AM PLOT DATE : 1/30/2013 PLOT BY : SEH PLOT NAME : PLOT SCALE : N/A

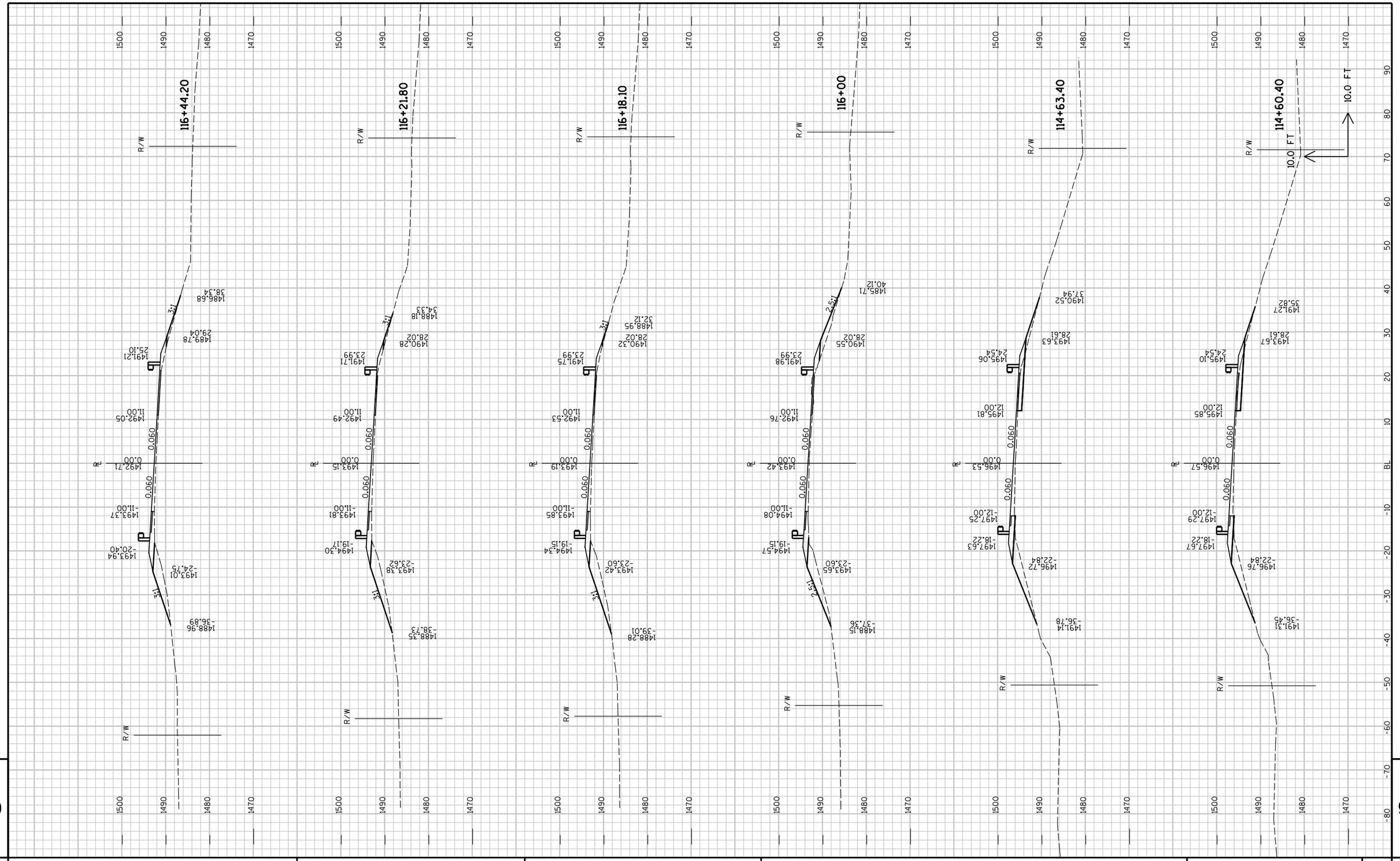

PROJECT NO : 8900-06-76	HWY : C.T.H. D	COUNTY : TAYLOR	CROSS SECTIONS - C.T.H. D	SHEET NO: 139 E

FILE NAME : P:\PT\T\Tayhd\108326\CAD\XBTAYD01.dgn PLOT TIME : 10:51:50 AM PLOT DATE : 1/30/2013 PLOT BY : SEH PLOT NAME : PLOT SCALE : N/A

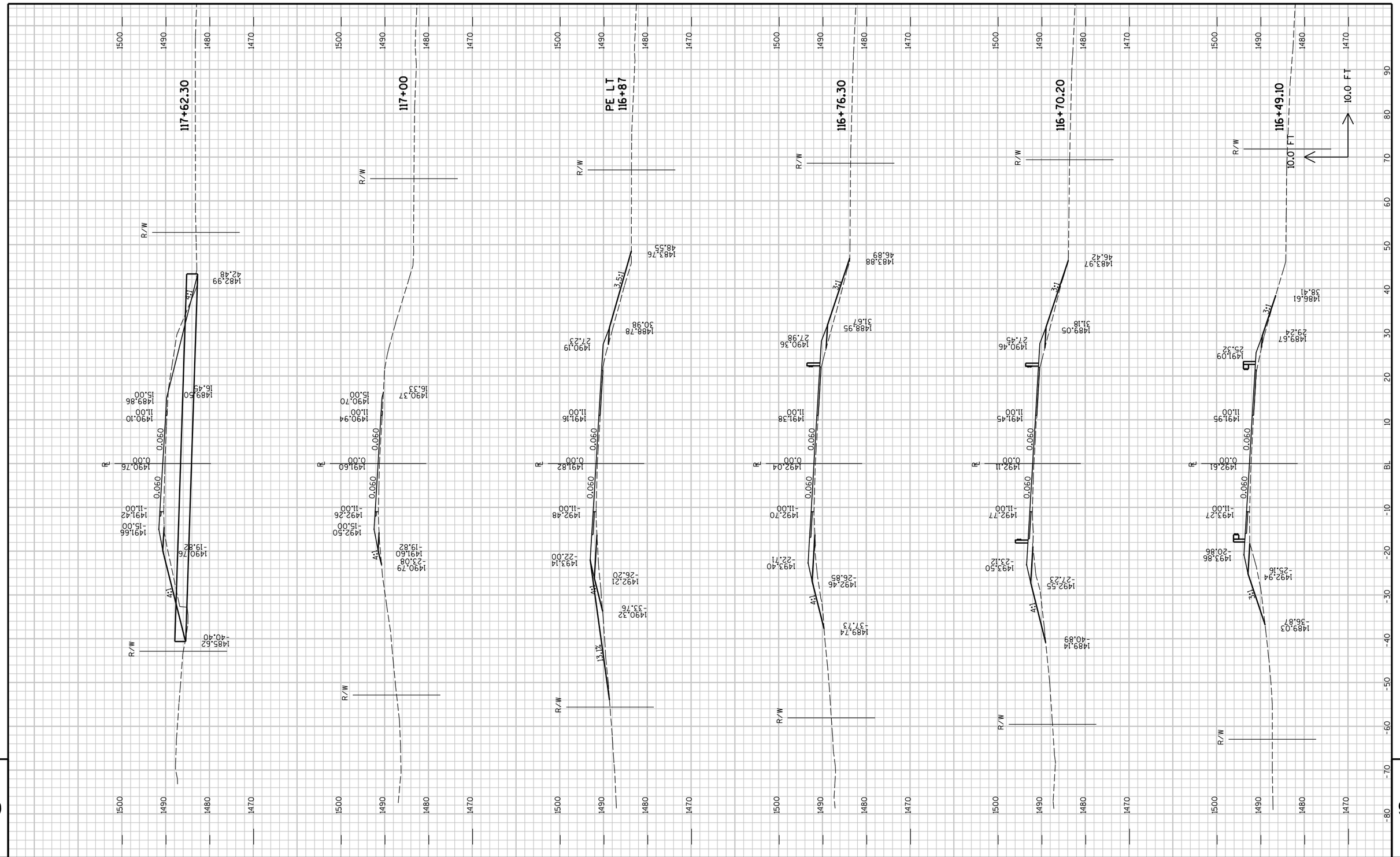
117+62.30
117+00
PE L T
116+87
116+76.30
116+70.20
116+49.10
10.0 FT
10.0 FT
R/W
R/W
R/W

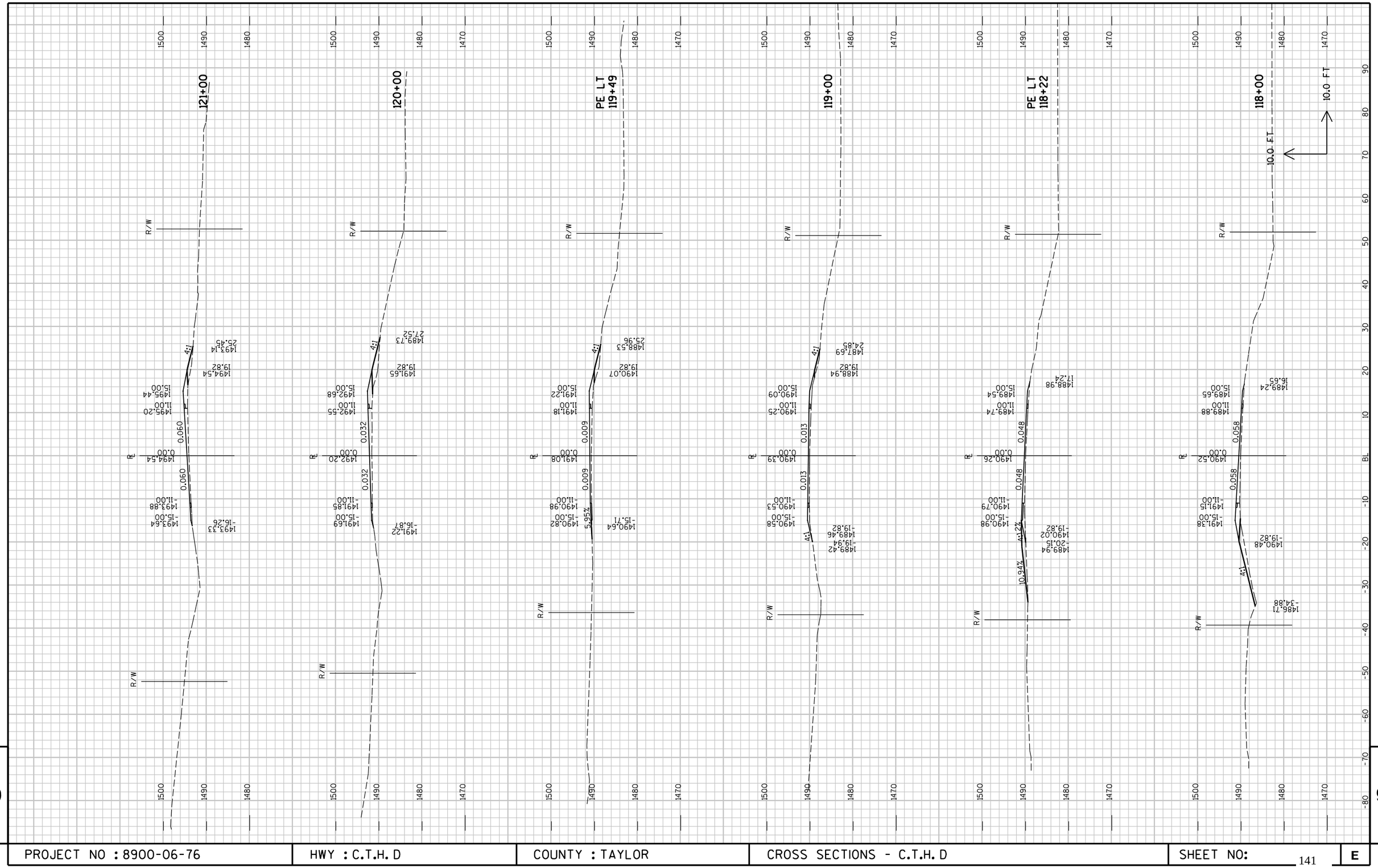

9

9

PROJECT NO : 8900-06-76	HWY : C.T.H. D	COUNTY : TAYLOR	CROSS SECTIONS - C.T.H. D	SHEET NO: 141	E

FILE NAME : P:\PT\T\Tayhd\108326\CAD\XBTAYD01.dgn PLOT TIME : 10:51:50 AM PLOT DATE : 1/30/2013 PLOT BY : SEH PLOT NAME : PLOT SCALE : N/A

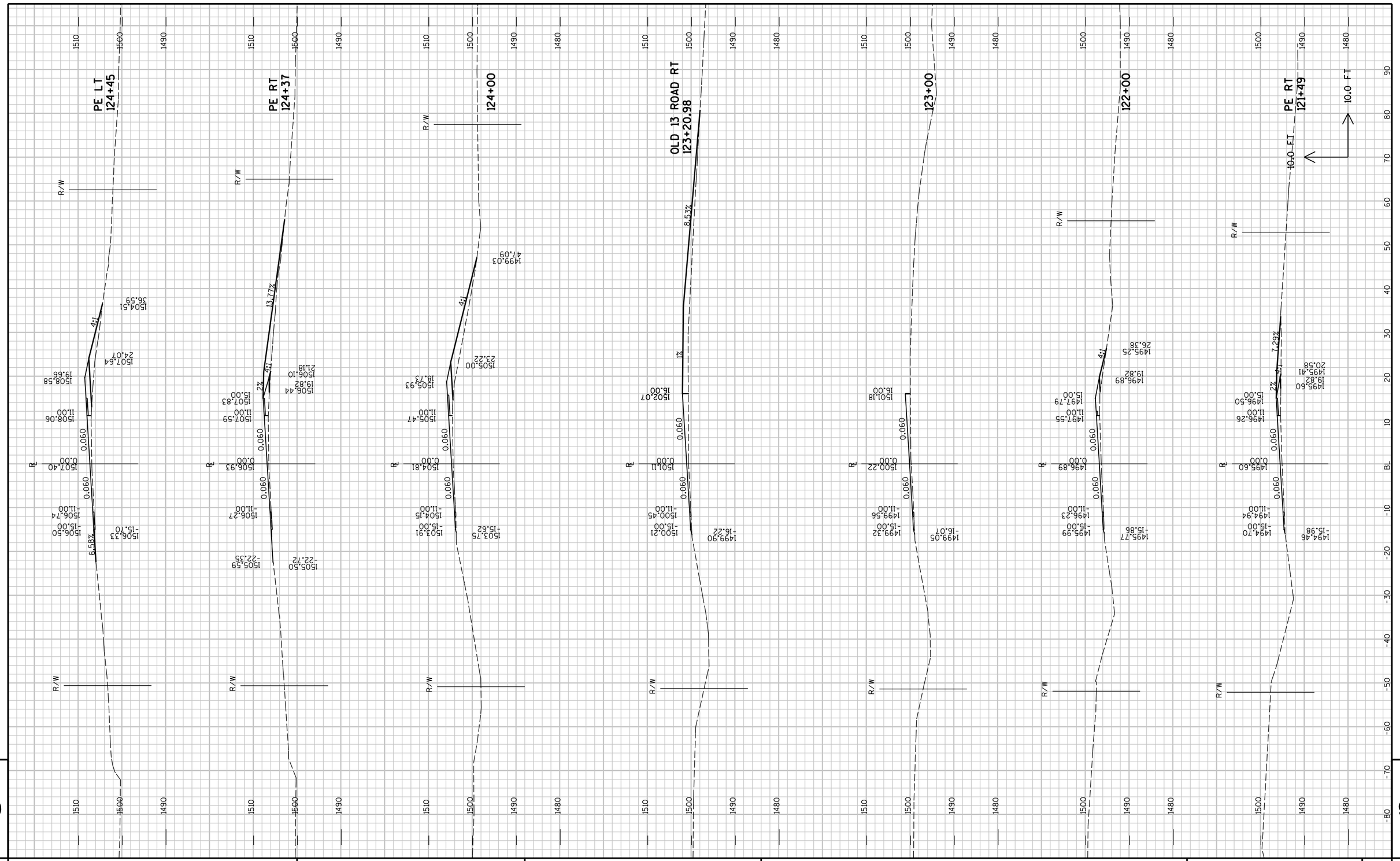

9

PROJECT NO : 8900-06-76	HWY : C.T.H. D	COUNTY : TAYLOR	CROSS SECTIONS - C.T.H. D	SHEET NO:	E

9

FILE NAME : P:\PT\T\Tayhd\108326\CAD\XBTAYD01.dgn PLOT TIME : 10:51:50 AM PLOT DATE : 1/30/2013 PLOT BY : SEH PLOT NAME : PLOT SCALE : N/A

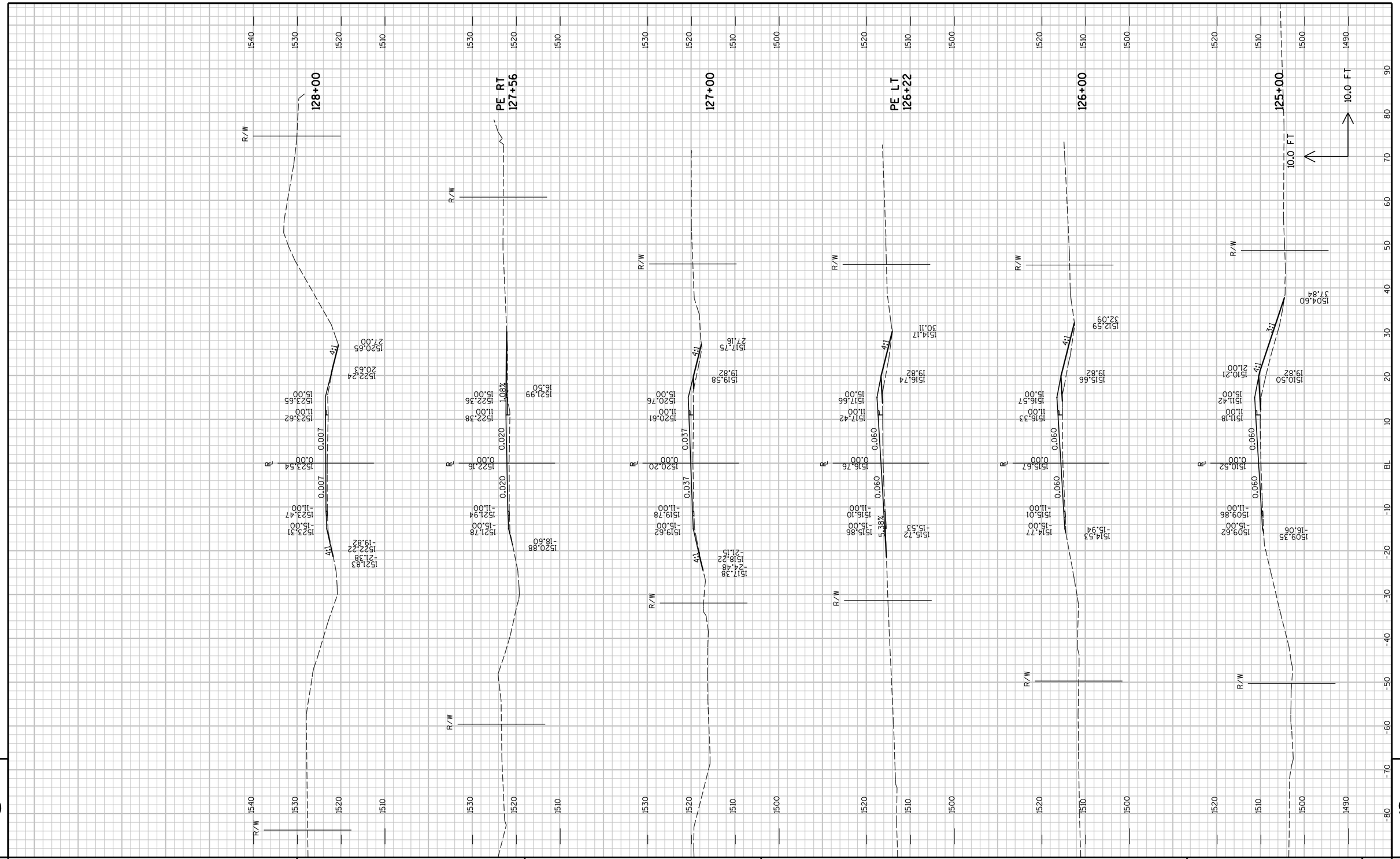

9	PROJECT NO : 8900-06-76	HWY : C.T.H. D	COUNTY : TAYLOR	CROSS SECTIONS - C.T.H. D	SHEET NO: 143	E	9

FILE NAME : P:\PT\T\Tayhd\108326\CAD\XBTAYD01.dgn PLOT TIME : 10:51:51 AM PLOT DATE : 1/30/2013 PLOT BY : SEH PLOT NAME : PLOT SCALE : N/A

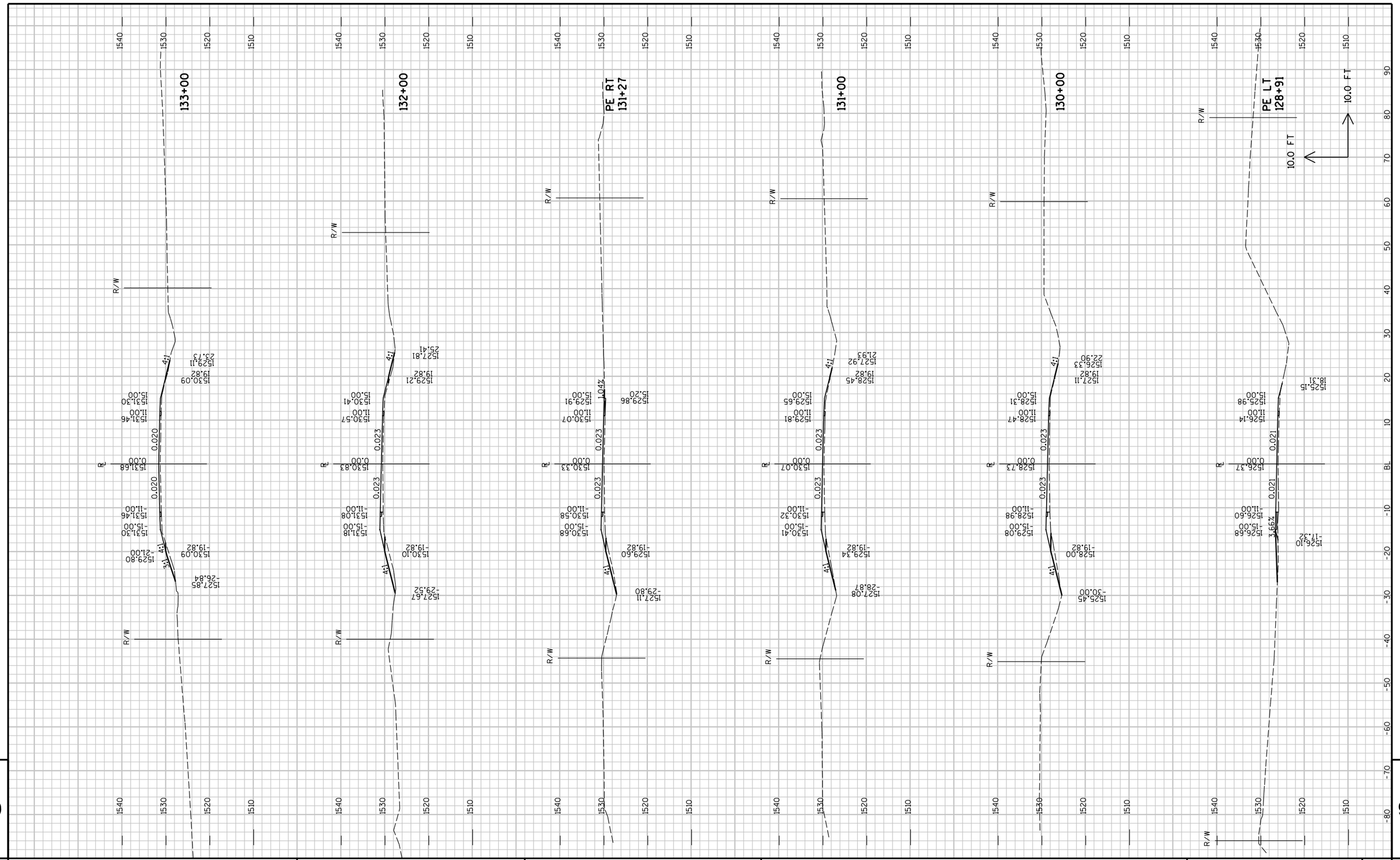

PROJECT NO : 8900-06-76	HWY : C.T.H. D	COUNTY : TAYLOR	CROSS SECTIONS - C.T.H. D	SHEET NO: 144	E

FILE NAME : P:\PT\T\Tayhd\108326\CAD\XBTAYD01.dgn PLOT TIME : 10:51:51 AM PLOT DATE : 1/30/2013 PLOT BY : SEH PLOT NAME : PLOT SCALE : N/A

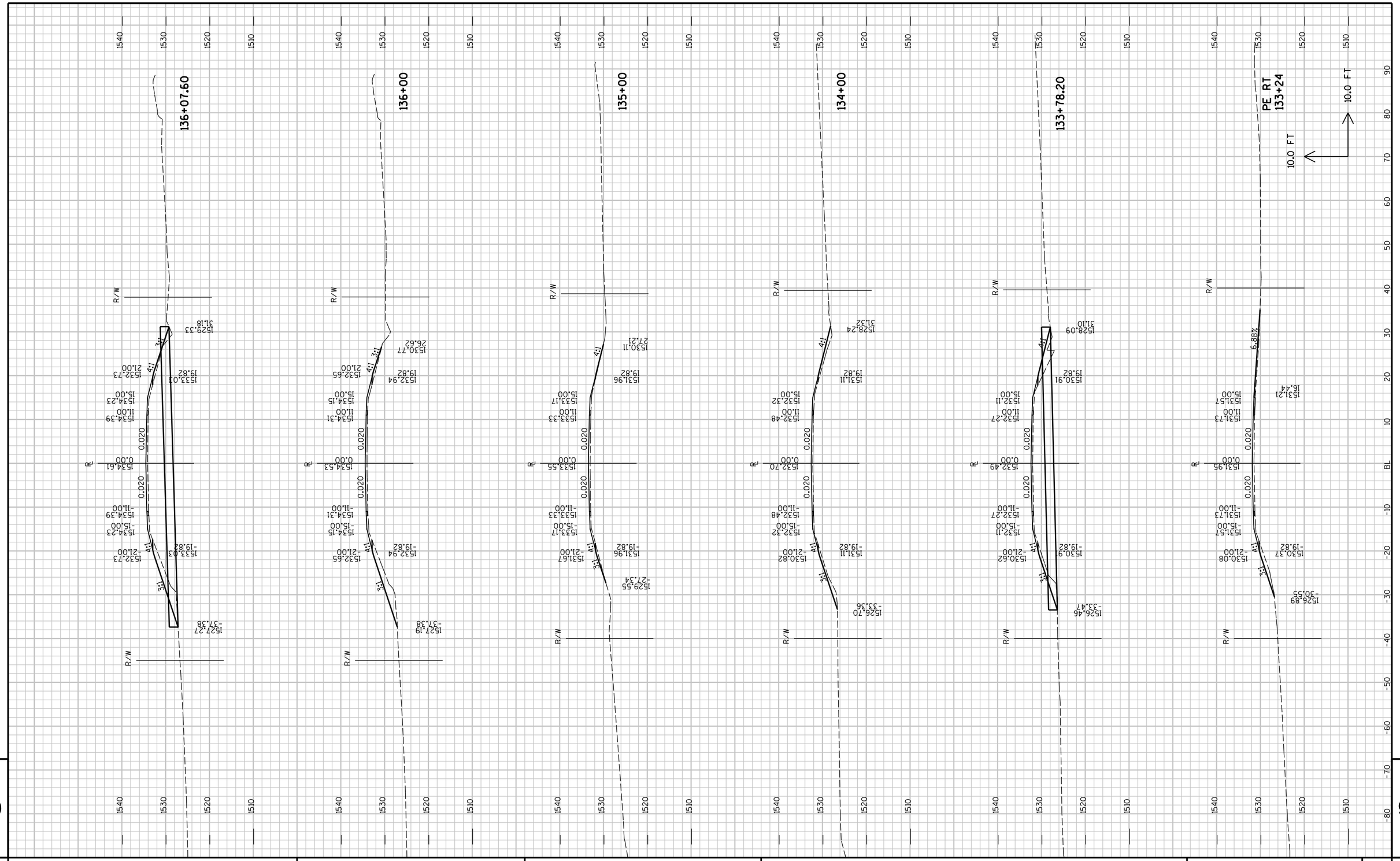

PROJECT NO : 8900-06-76	HWY : C.T.H. D	COUNTY : TAYLOR	CROSS SECTIONS - C.T.H. D	SHEET NO: 145 E

FILE NAME : P:\PT\T\Tayhd\108326\CAD\XBTAYD01.dgn PLOT TIME : 10:51:51 AM PLOT DATE : 1/30/2013 PLOT BY : SEH PLOT NAME : PLOT SCALE : N/A

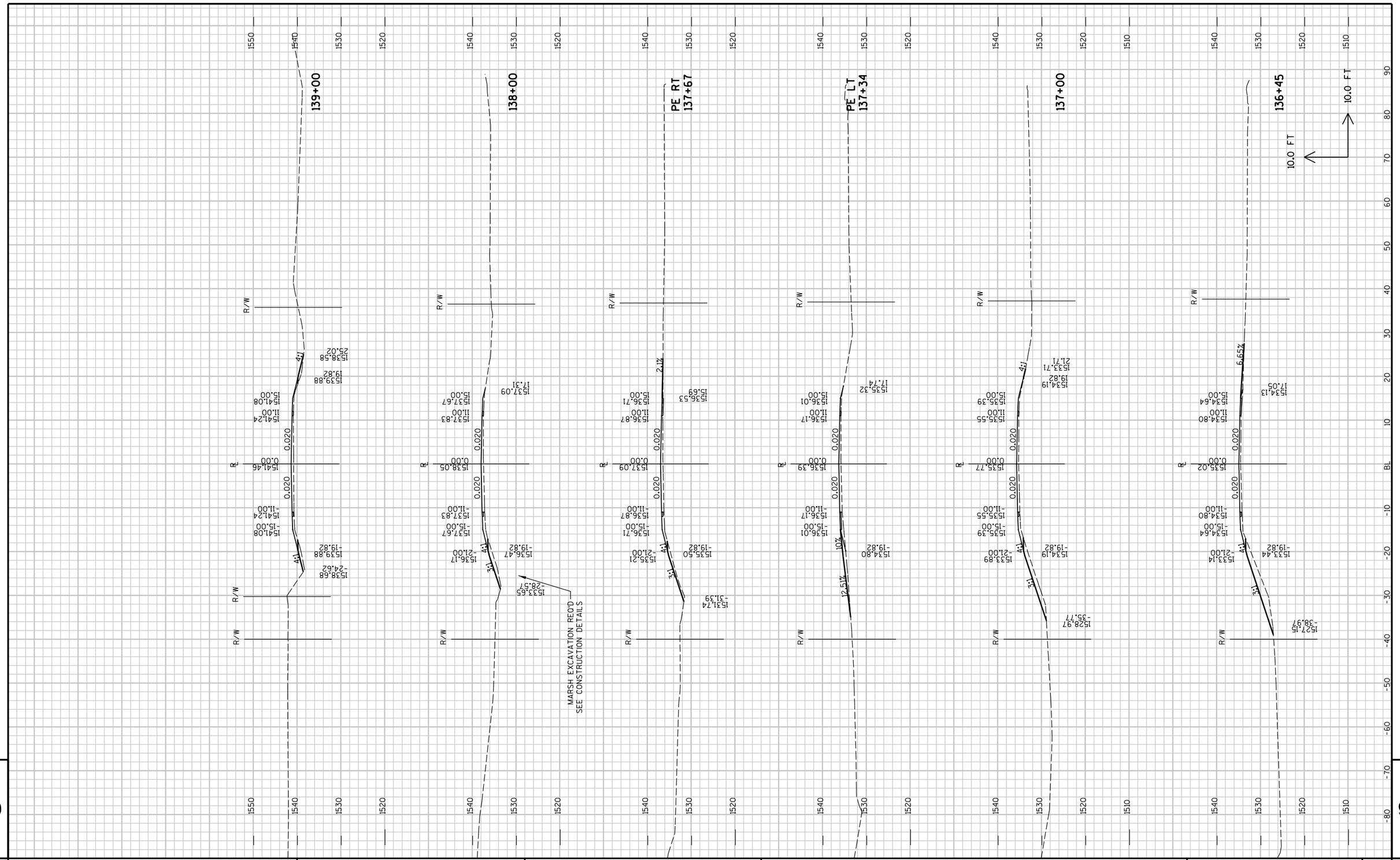

PROJECT NO : 8900-06-76	HWY : C.T.H. D	COUNTY : TAYLOR	CROSS SECTIONS - C.T.H. D	SHEET NO: E

FILE NAME : P:\PT\T\Tayhd\108326\CAD\XBTAYD01.dgn PLOT TIME : 10:51:51 AM PLOT DATE : 1/30/2013 PLOT BY : SEH PLOT NAME : PLOT SCALE : N/A

9

9

PROJECT NO : 8900-06-76	HWY : C.T.H. D	COUNTY : TAYLOR	CROSS SECTIONS - C.T.H. D	SHEET NO: 147	E

FILE NAME : P:\PT\T\Tayhd\108326\CAD\XBTAYD01.dgn PLOT TIME : 10:51:51 AM PLOT DATE : 1/30/2013 PLOT BY : SEH PLOT NAME : PLOT SCALE : N/A

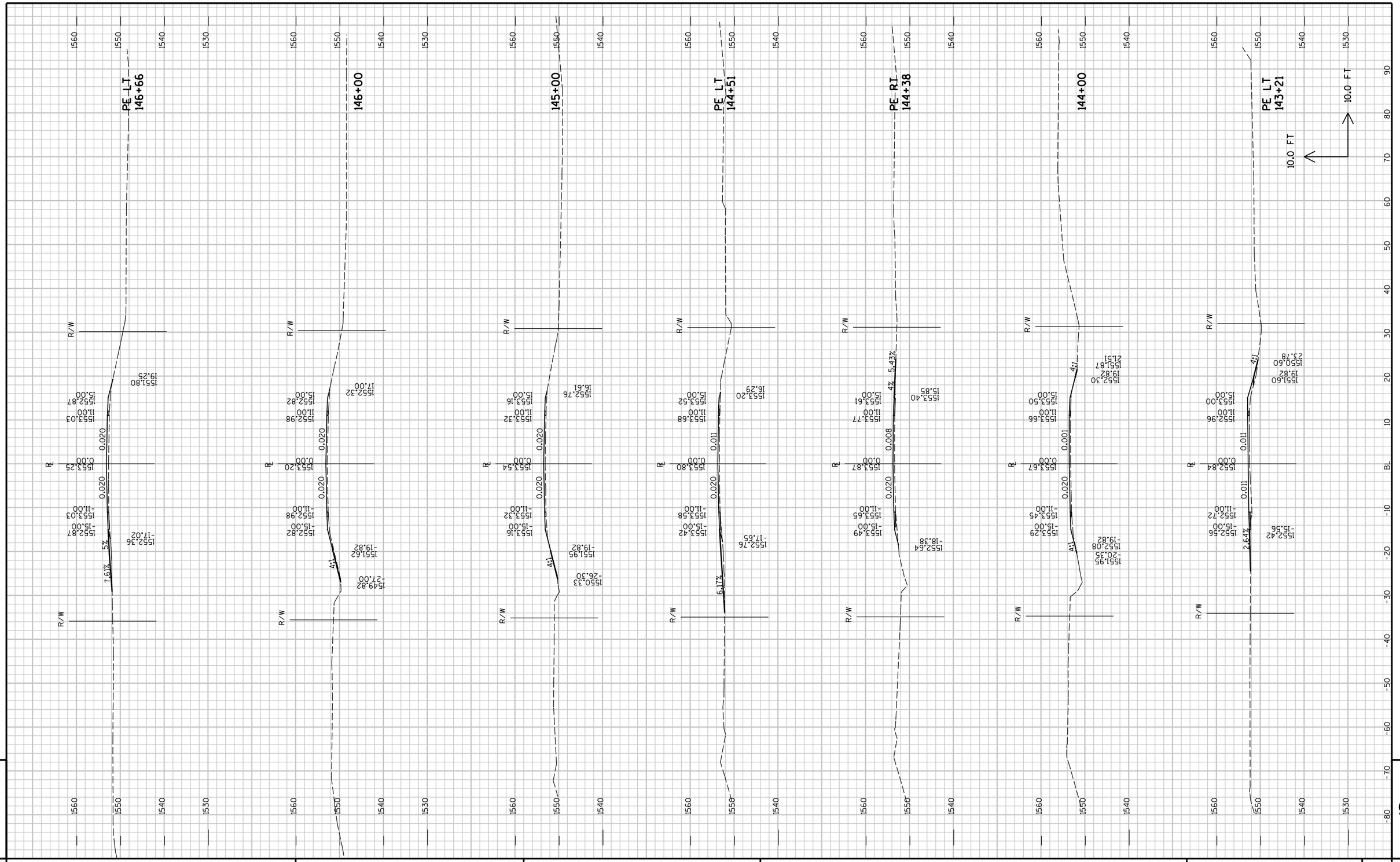

PROJECT NO : 8900-06-76	HWY : C.T.H. D	COUNTY : TAYLOR	CROSS SECTIONS - C.T.H. D	SHEET NO: 148	E

FILE NAME : P:\PT\T\Tayhd\108326\CAD\XBTAYD01.dgn PLOT TIME : 10:51:52 AM PLOT DATE : 1/30/2013 PLOT BY : SEH PLOT NAME : PLOT SCALE : N/A

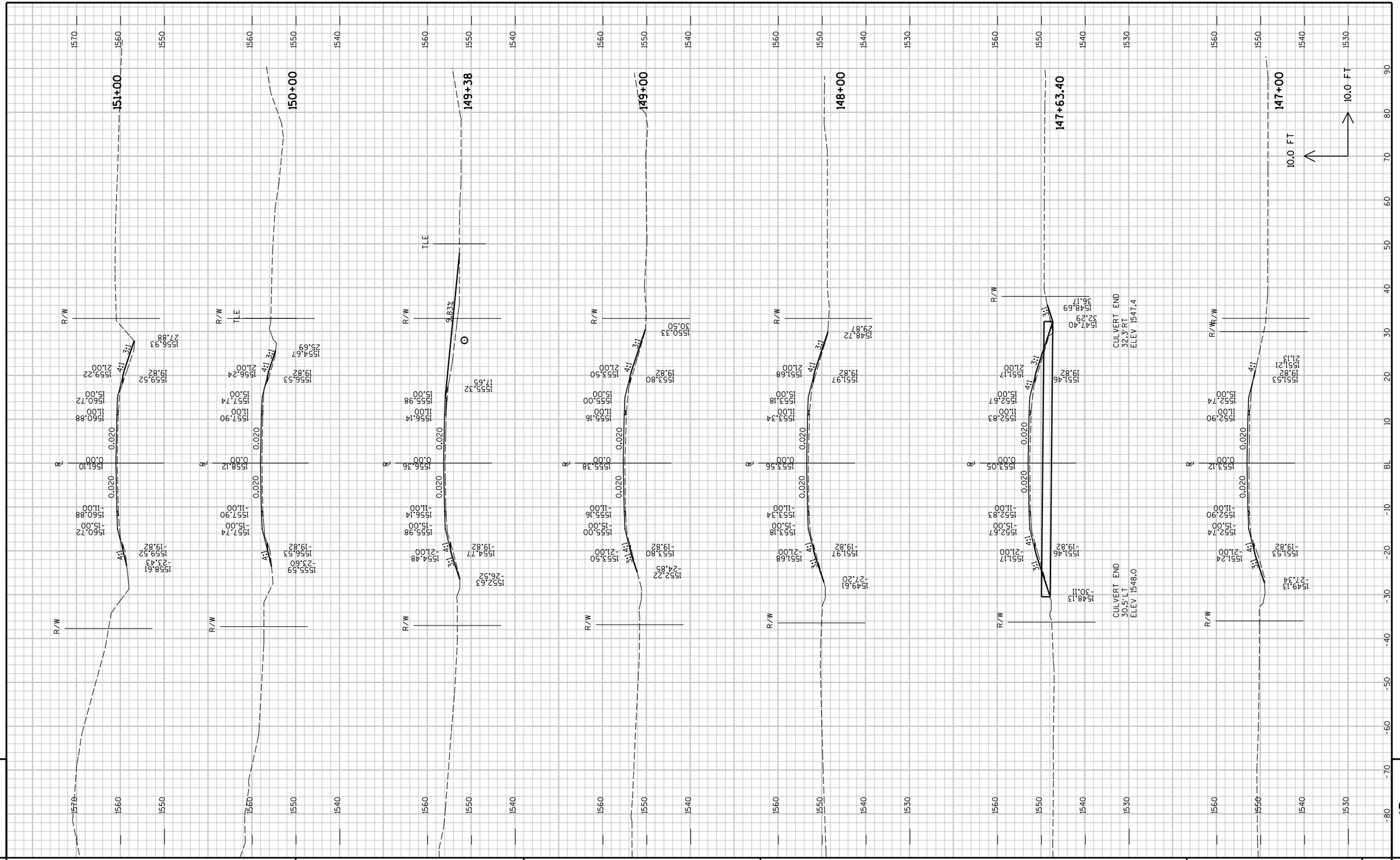

PROJECT NO : 8900-06-76	HWY : C.T.H. D	COUNTY : TAYLOR	CROSS SECTIONS - C.T.H. D	SHEET NO: 149	E

FILE NAME : P:\PT\T\Tayhd\108326\CAD\XBTAYD01.dgn PLOT TIME : 11:09:14 AM PLOT DATE : 3/5/2013 PLOT BY : SEH PLOT NAME : PLOT SCALE : N/A

PROJECT NO : 8900-06-76	HWY : C.T.H. D	COUNTY : TAYLOR	CROSS SECTIONS - C.T.H. D	SHEET NO: 150

FILE NAME : P:\PT\T\Tayhd\108326\CAD\XBTAYD01.dgn PLOT TIME : 10:51:52 AM PLOT DATE : 1/30/2013 PLOT BY : SEH PLOT NAME : PLOT SCALE : N/A

9 E 9

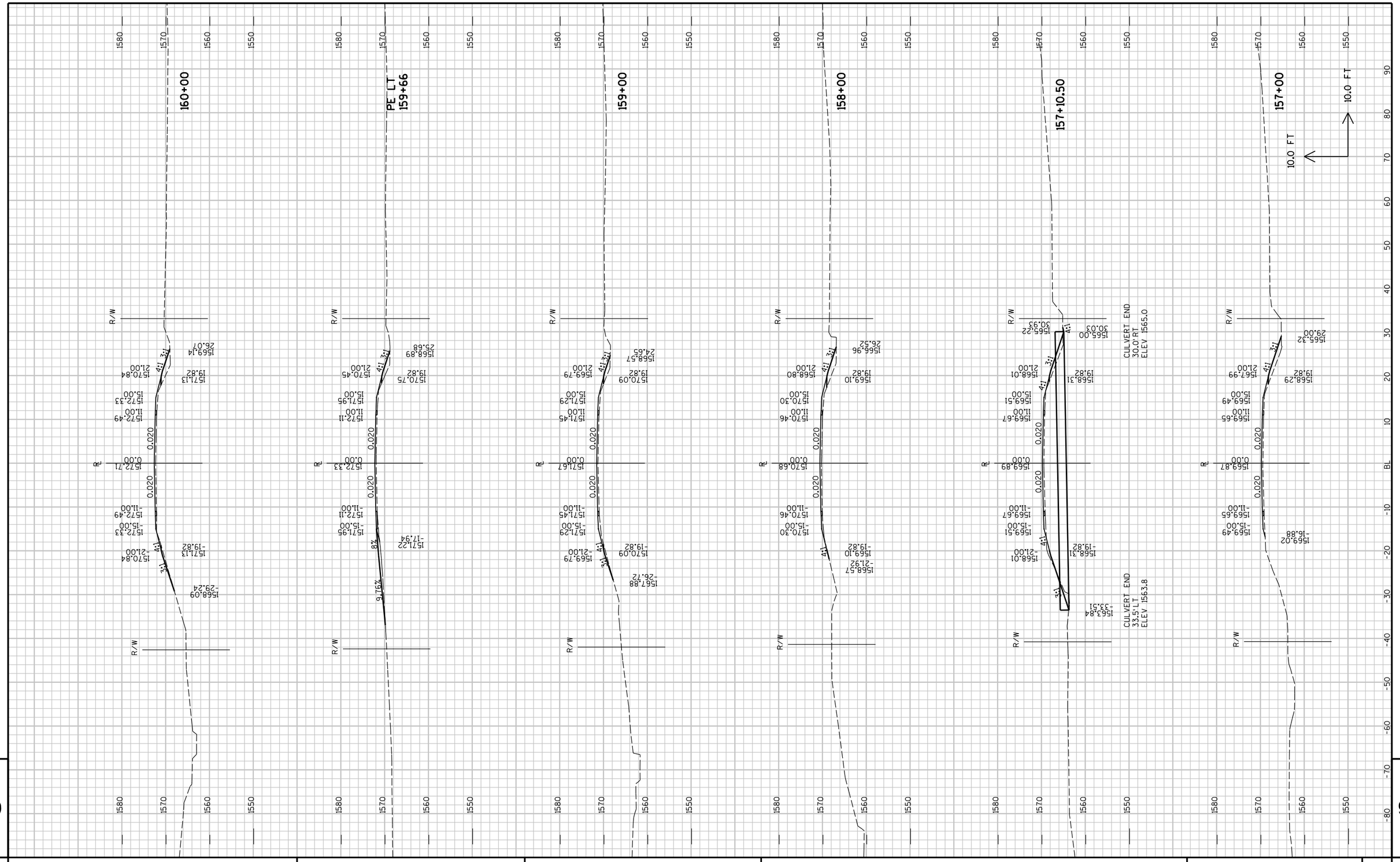

9	PROJECT NO : 8900-06-76	HWY : C.T.H. D	COUNTY : TAYLOR	CROSS SECTIONS - C.T.H. D	SHEET NO: 151 E

FILE NAME : P:\PT\T\Tayhd\108326\CAD\XBTAYD01.dgn PLOT TIME : 10:51:52 AM PLOT DATE : 1/30/2013 PLOT BY : SEH PLOT NAME : PLOT SCALE : N/A

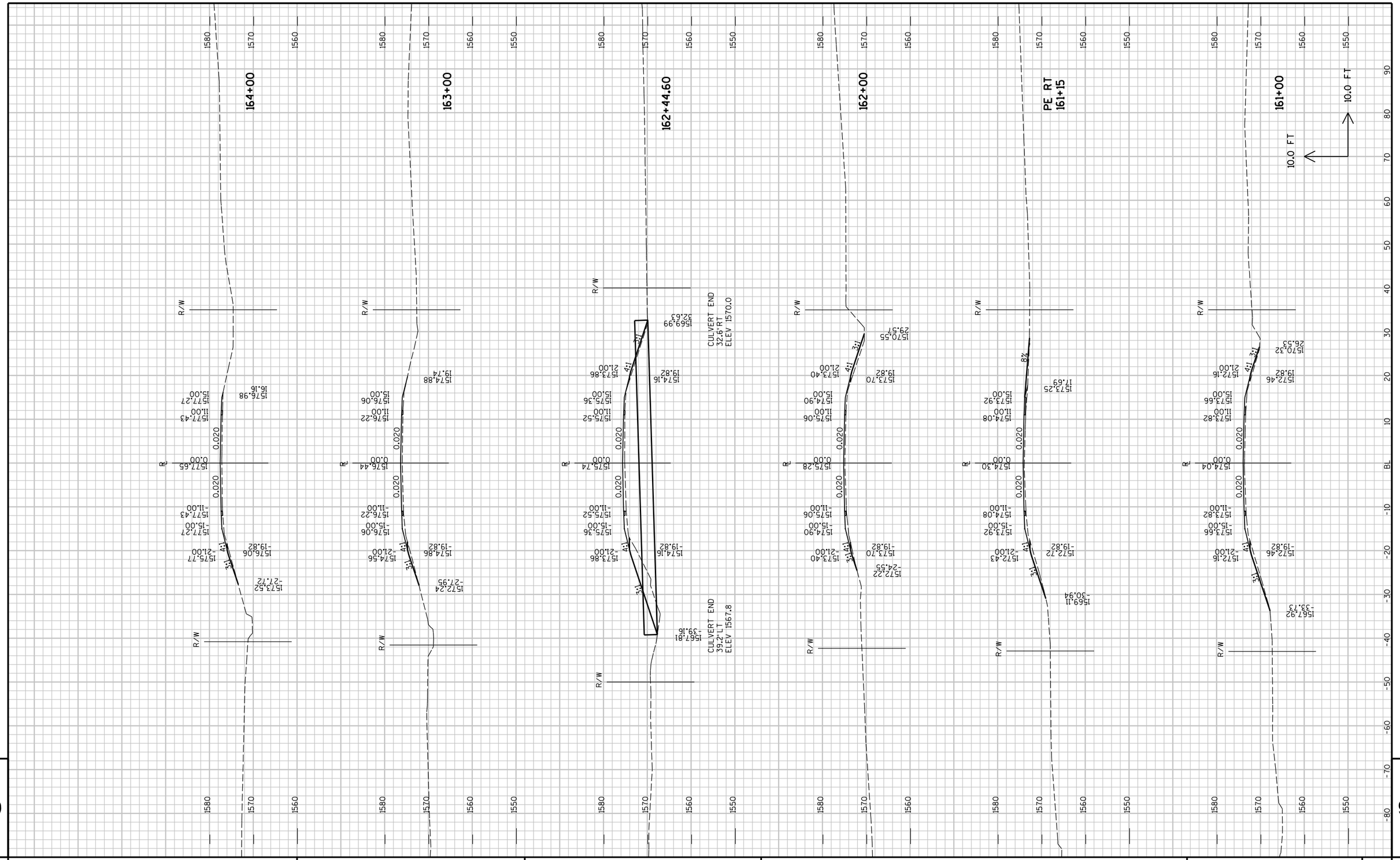

PROJECT NO : 8900-06-76	HWY : C.T.H. D	COUNTY : TAYLOR	CROSS SECTIONS - C.T.H. D	SHEET NO: 152 E

FILE NAME : P:\PT\T\Tayhd\108326\CAD\XBTAYD01.dgn PLOT TIME : 10:51:53 AM PLOT DATE : 1/30/2013 PLOT BY : SEH PLOT NAME : PLOT SCALE : N/A

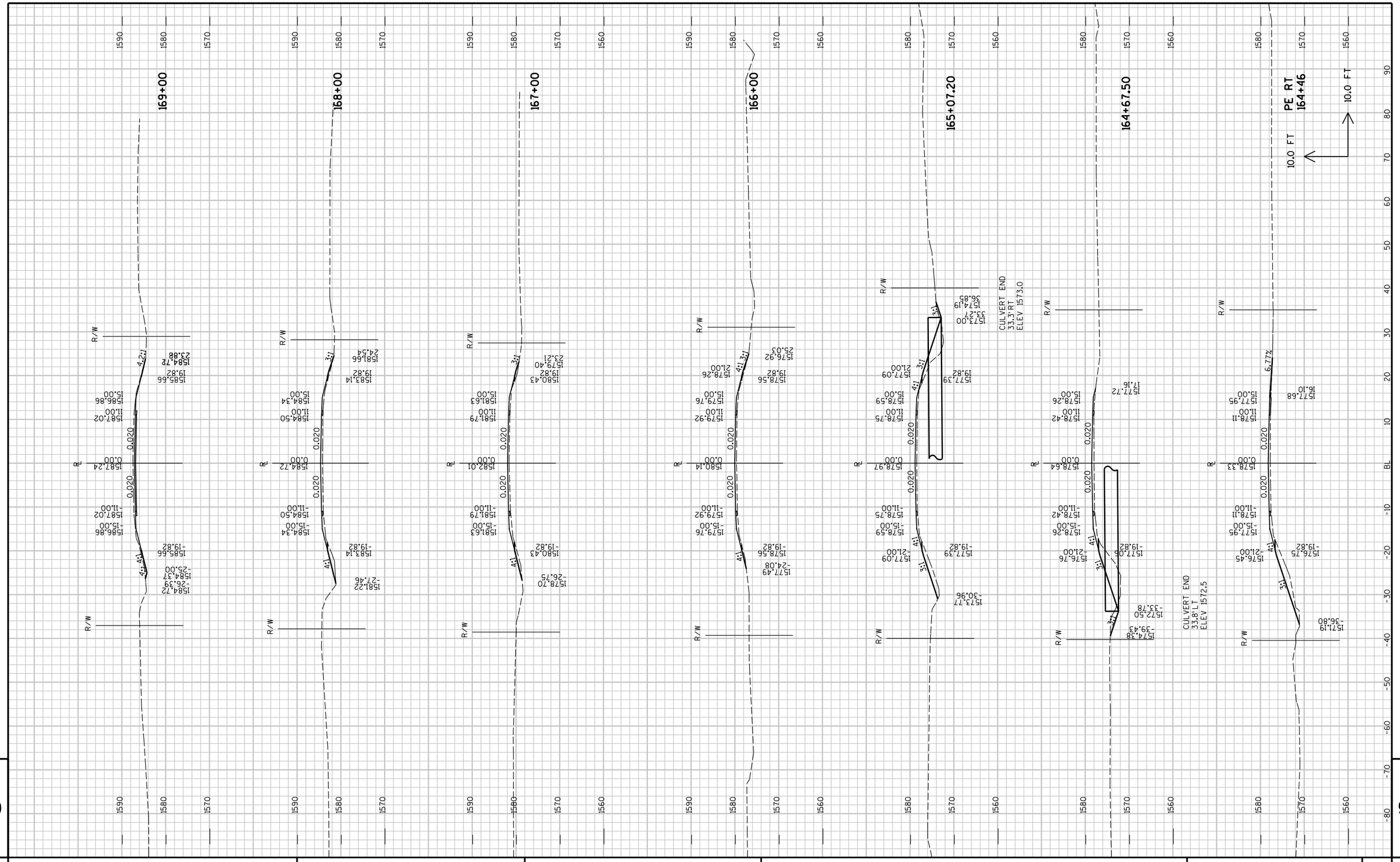

PROJECT NO : 8900-06-76	HWY : C.T.H. D	COUNTY : TAYLOR	CROSS SECTIONS - C.T.H. D	SHEET NO: 153 E

FILE NAME : P:\PT\T\Tayhd\108326\CAD\XBTAYD01.dgn PLOT TIME : 10:51:53 AM PLOT DATE : 1/30/2013 PLOT BY : SEH PLOT NAME : PLOT SCALE : N/A

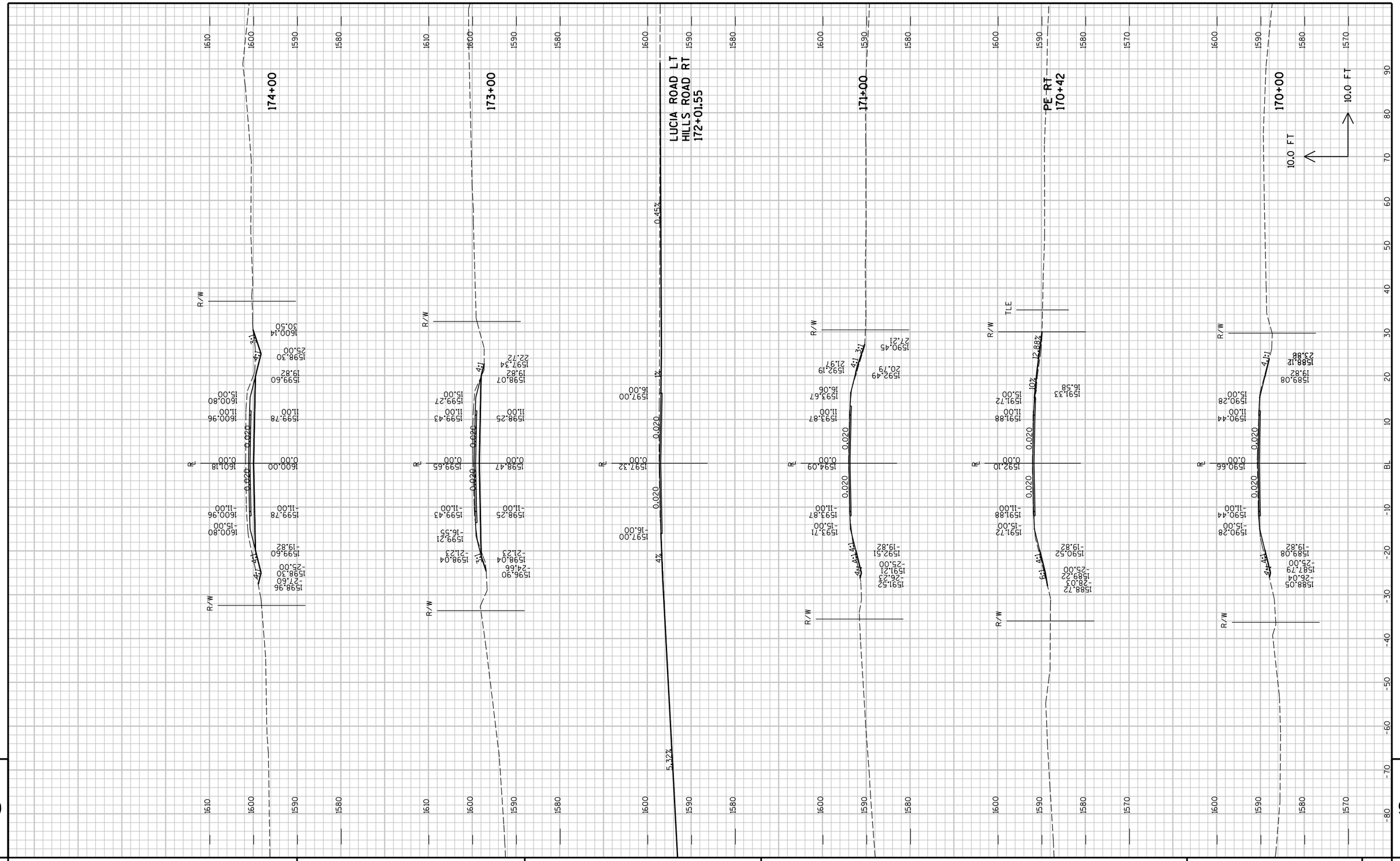

PROJECT NO : 8900-06-76	HWY : C.T.H. D	COUNTY : TAYLOR	CROSS SECTIONS - C.T.H. D	SHEET NO: 154	E

FILE NAME : P:\PT\T\Tayhd\108326\CAD\XBTAYD01.dgn PLOT TIME : 10:51:53 AM PLOT DATE : 1/30/2013 PLOT BY : SEH PLOT NAME : PLOT SCALE : N/A

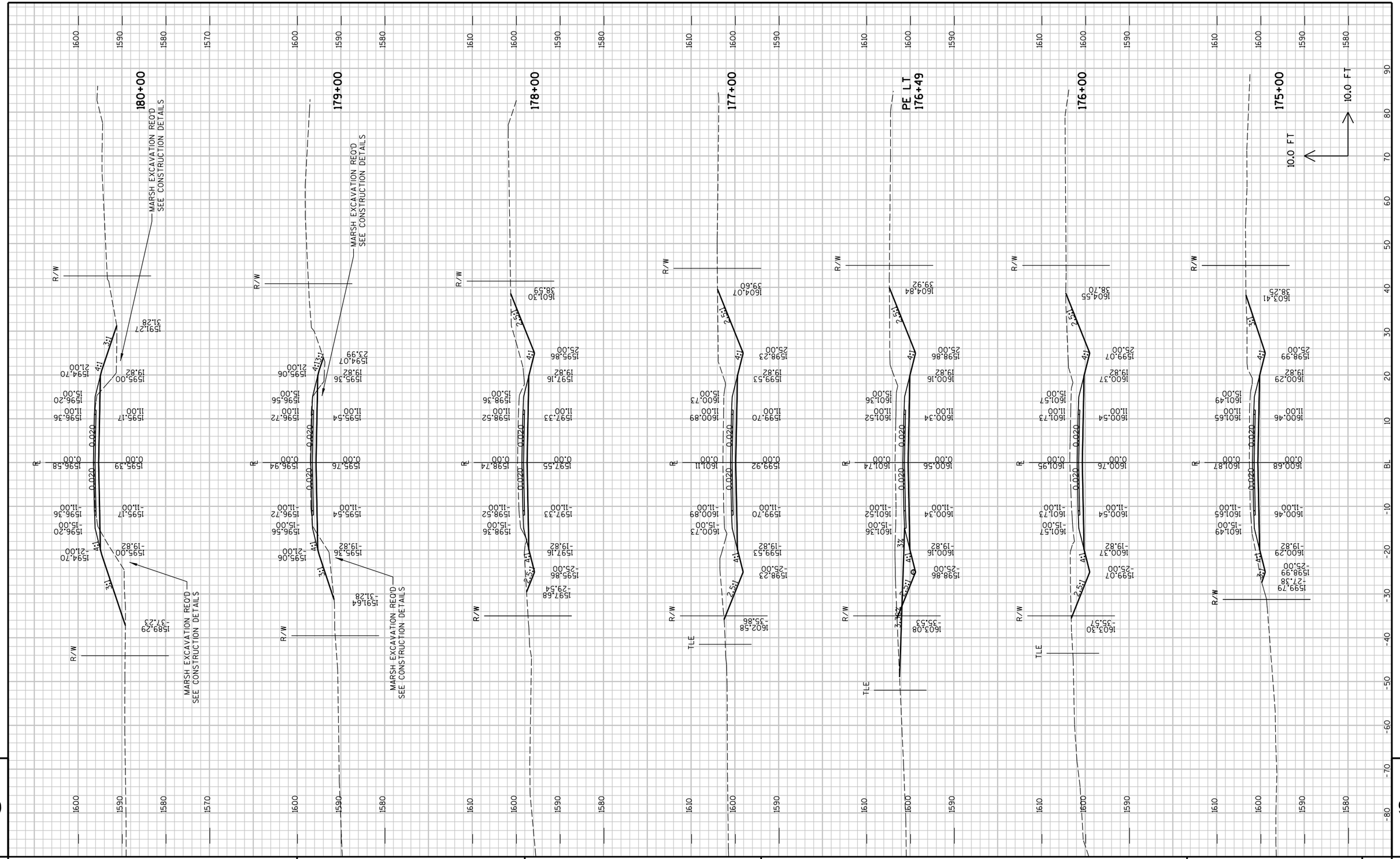

PROJECT NO : 8900-06-76	HWY : C.T.H. D	COUNTY : TAYLOR	CROSS SECTIONS - C.T.H. D	SHEET NO: 155 E

FILE NAME : P:\PT\T\Tayhd\108326\CAD\XBTAYD01.dgn PLOT TIME : 10:51:53 AM PLOT DATE : 1/30/2013 PLOT BY : SEH PLOT NAME : PLOT SCALE : N/A

PROJECT NO : 8900-06-76

HWY : C.T.H. D

COUNTY : TAYLOR

CROSS SECTIONS - C.T.H. D

SHEET NO: 156

PLOT NAME :

PLOT SCALE : N/A

PLOT BY : SEH

PLOT DATE : 1/30/2013

PLOT TIME : 10:51:54 AM

FILE NAME : P:\PTV\Topo\108326\CAD\XBTAYD01.dgn

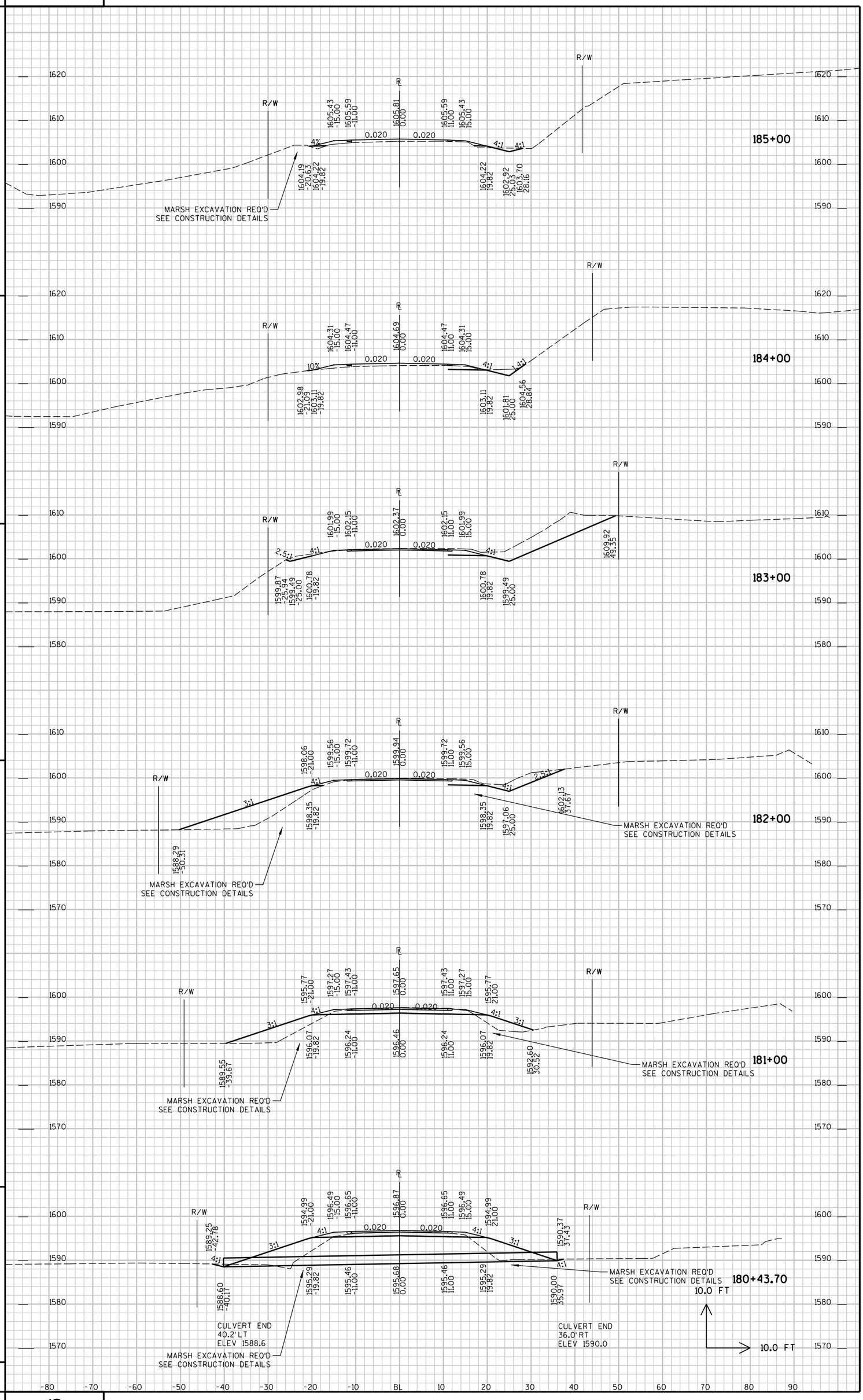

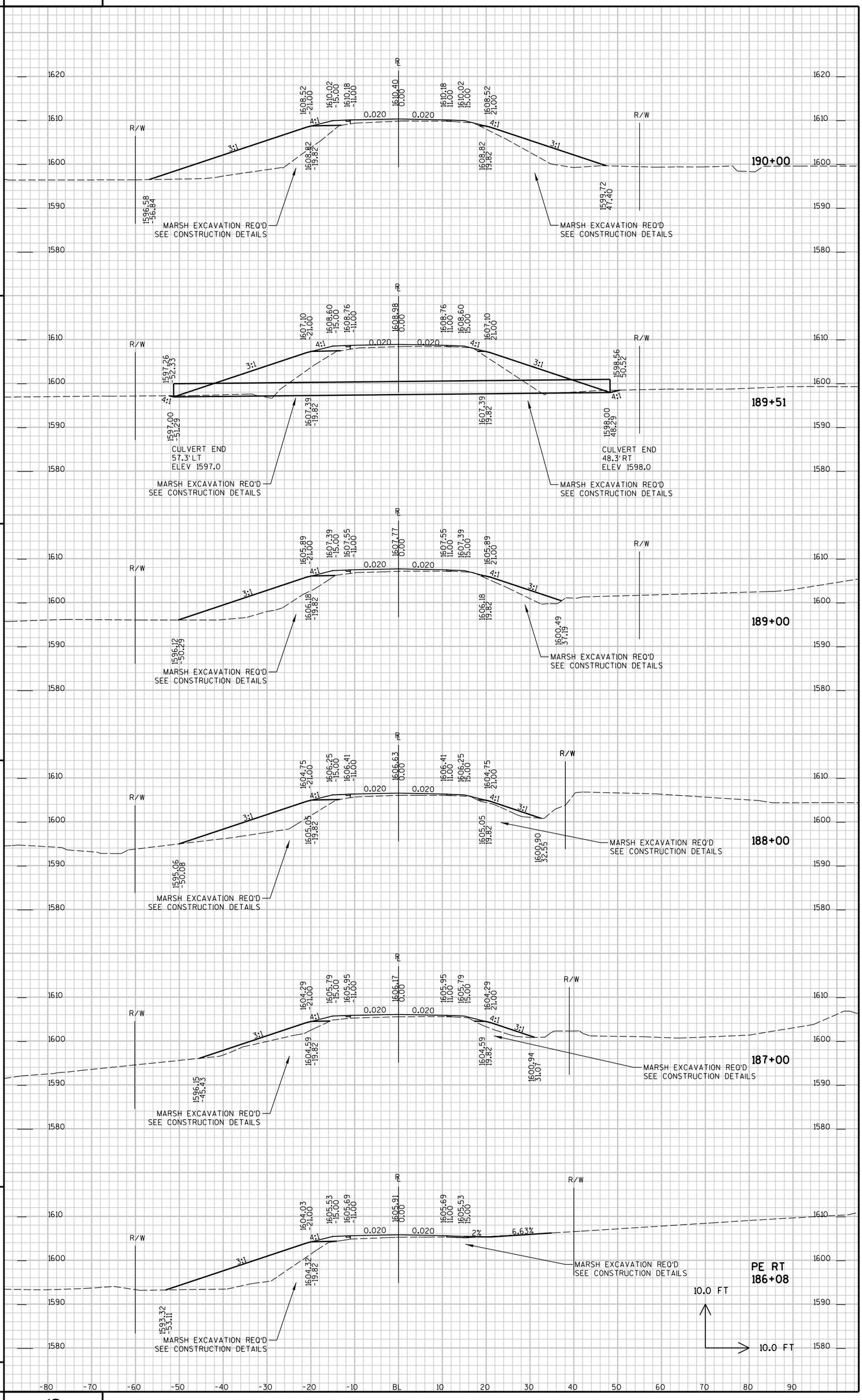

PROJECT NO : 8900-06-76

HWY : C.T.H. D

COUNTY : TAYLOR

CROSS SECTIONS - C.T.H. D

SHEET NO: 157

FILE NAME : P:\PT\T\Tayhd\108326\CAD\XBTAYD01.dgn

PLOT TIME : 10:51:54 AM

PLOT DATE : 1/30/2013

PLOT BY : SEH

PLOT NAME :

PLOT SCALE : N/A

9

E

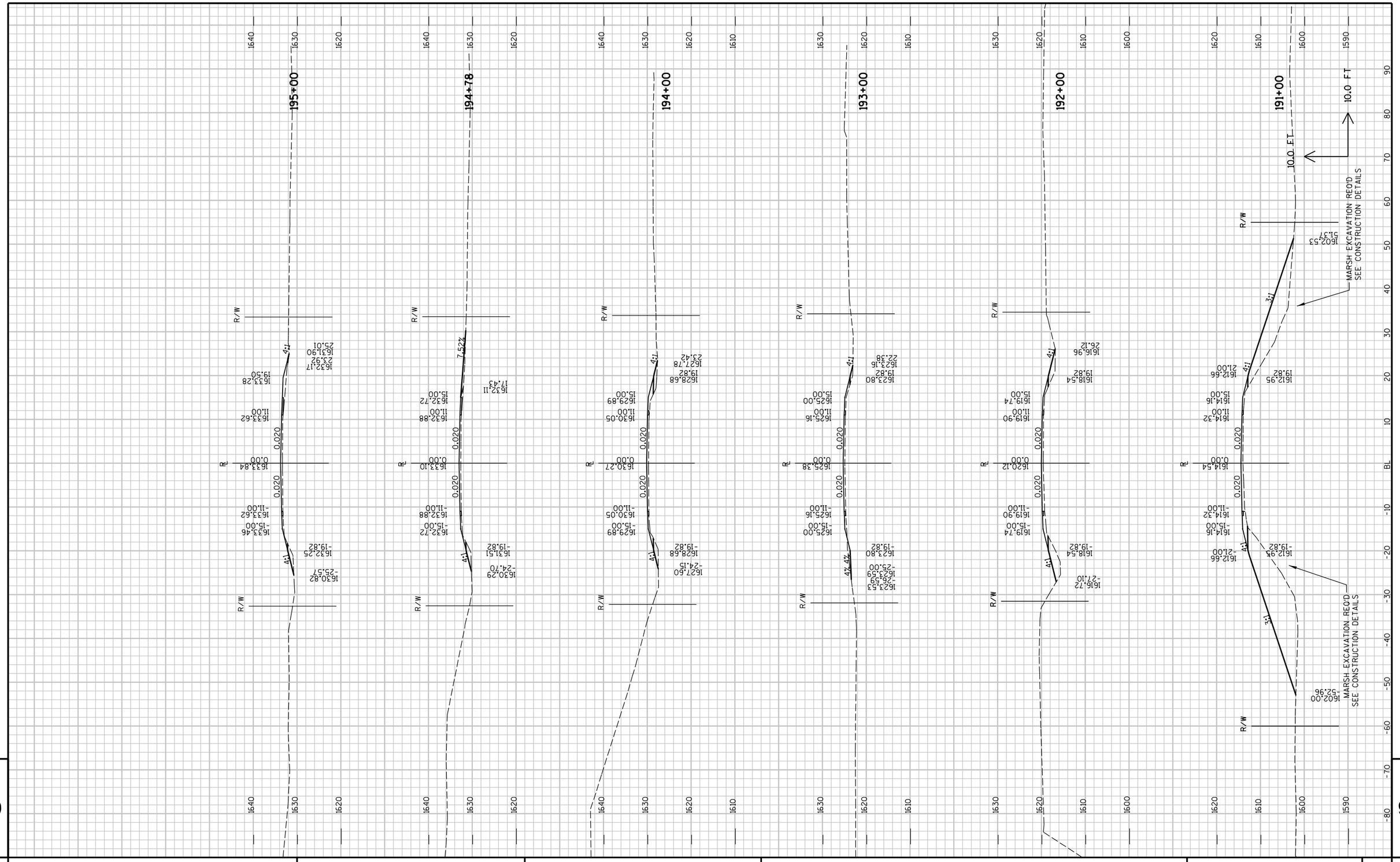

PROJECT NO : 8900-06-76	HWY : C.T.H. D	COUNTY : TAYLOR	CROSS SECTIONS - C.T.H. D	SHEET NO: 158	E

FILE NAME : P:\PT\T\Tayhd\108326\CAD\XBTAYD01.dgn PLOT TIME : 10:51:54 AM PLOT DATE : 1/30/2013 PLOT BY : SEH PLOT NAME : PLOT SCALE : N/A

WALTERS LANE RT
198+64.53

198+00

197+00

196+62.50

196+00

PE LT
195+48

10.0 FT

10.0 FT

CULVERT END
49.7 RT
ELEV 1625.8

CULVERT END
56.8 LT
ELEV 1623.5

MARSH EXCAVATION REQ'D
SEE CONSTRUCTION DETAILS

MARSH EXCAVATION REQ'D
SEE CONSTRUCTION DETAILS

PROJECT NO : 8900-06-76	HWY : C.T.H. D	COUNTY : TAYLOR	CROSS SECTIONS - C.T.H. D	SHEET NO:	E

FILE NAME : P:\PT\T\Tayhd\108326\CAD\XBTAYD01.dgn PLOT TIME : 10:51:54 AM PLOT DATE : 1/30/2013 PLOT BY : SEH PLOT NAME : PLOT SCALE : N/A

PROJECT NO : 8900-06-76

HWY : C.T.H. D

COUNTY : TAYLOR

CROSS SECTIONS - C.T.H. D

SHEET NO: 160

FILE NAME : P:\PTV\Tdyrd\108326\CAD\XBTAYD01.dgn

PLOT TIME : 10:51:54 AM

PLOT DATE : 1/30/2013

PLOT BY : SEH

PLOT NAME :

PLOT SCALE : N/A

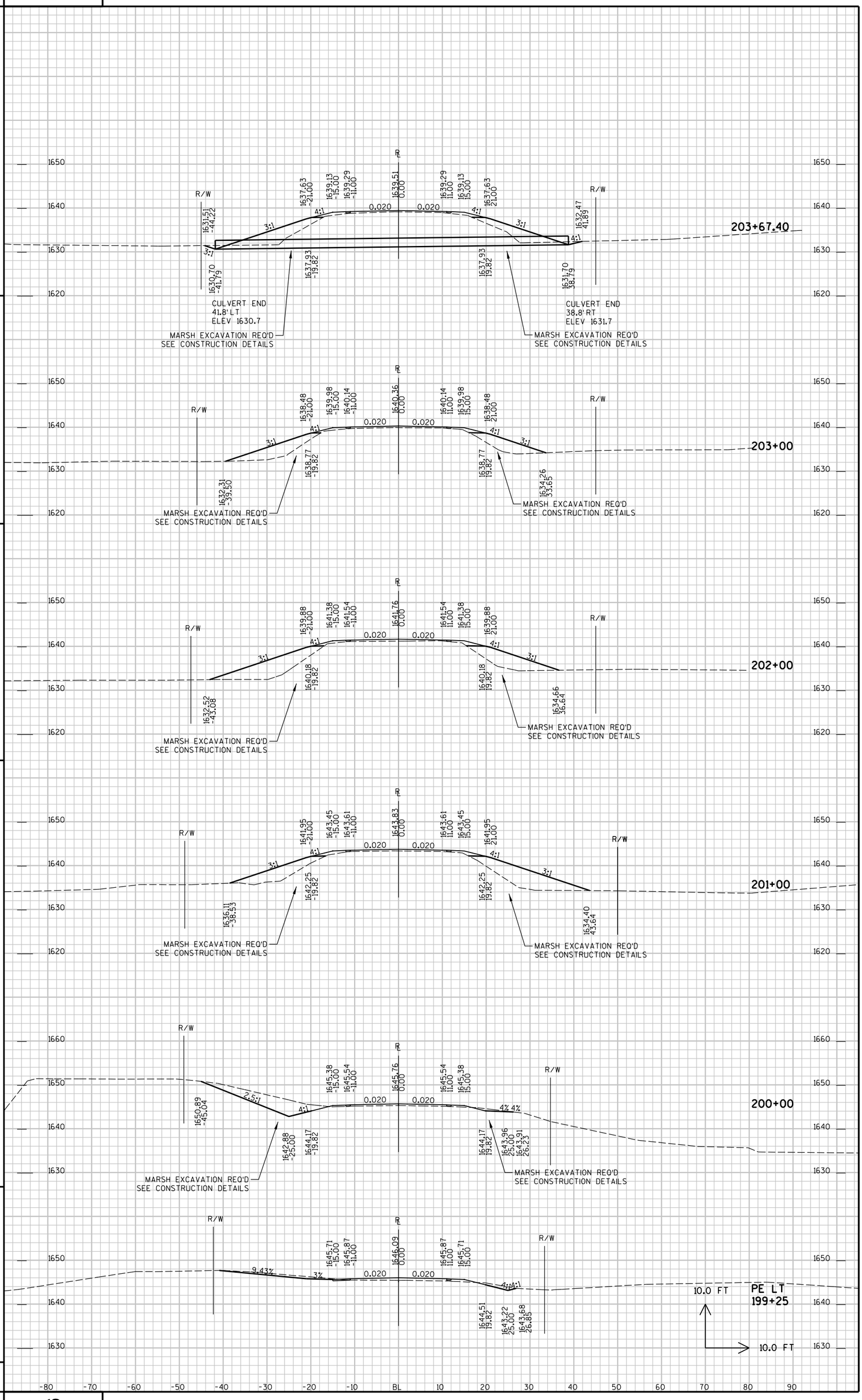

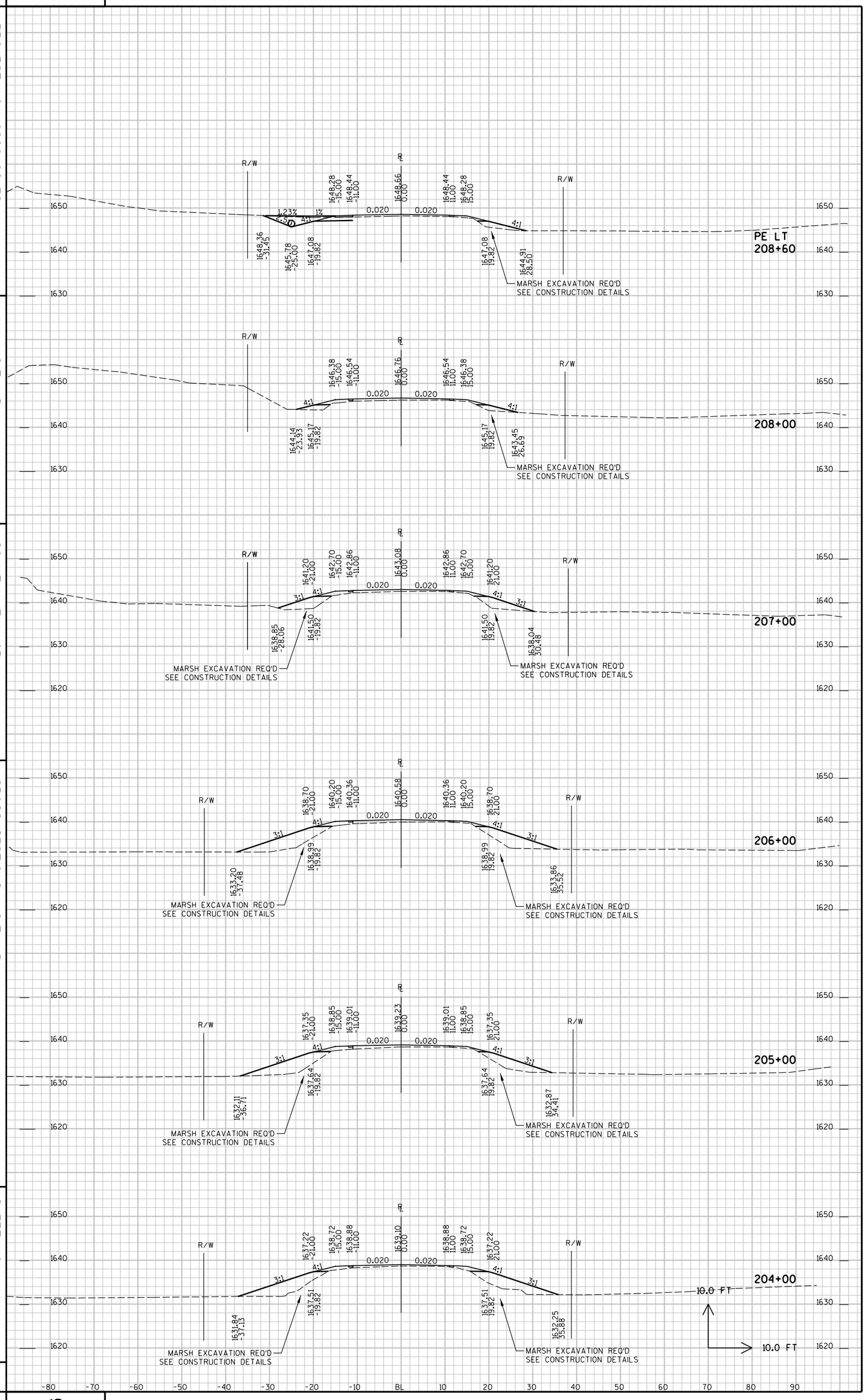

FILE NAME : P:\PTV\Tdyng\108326\CAD\XBTAYD01.dgn
PLOT TIME : 10:51:55 AM
PLOT DATE : 1/30/2013
PLOT BY : SEH
PLOT NAME :
PLOT SCALE : N/A

PROJECT NO : 8900-06-76

HWY : C.T.H. D

COUNTY : TAYLOR

CROSS SECTIONS - C.T.H. D

SHEET NO: 162

FILE NAME : P:\PTV\Taylrd\108326\CAD\XBTAYD01.dgn
PLOT TIME : 10:51:55 AM
PLOT DATE : 1/30/2013
PLOT BY : SEH
PLOT NAME :
PLOT SCALE : N/A

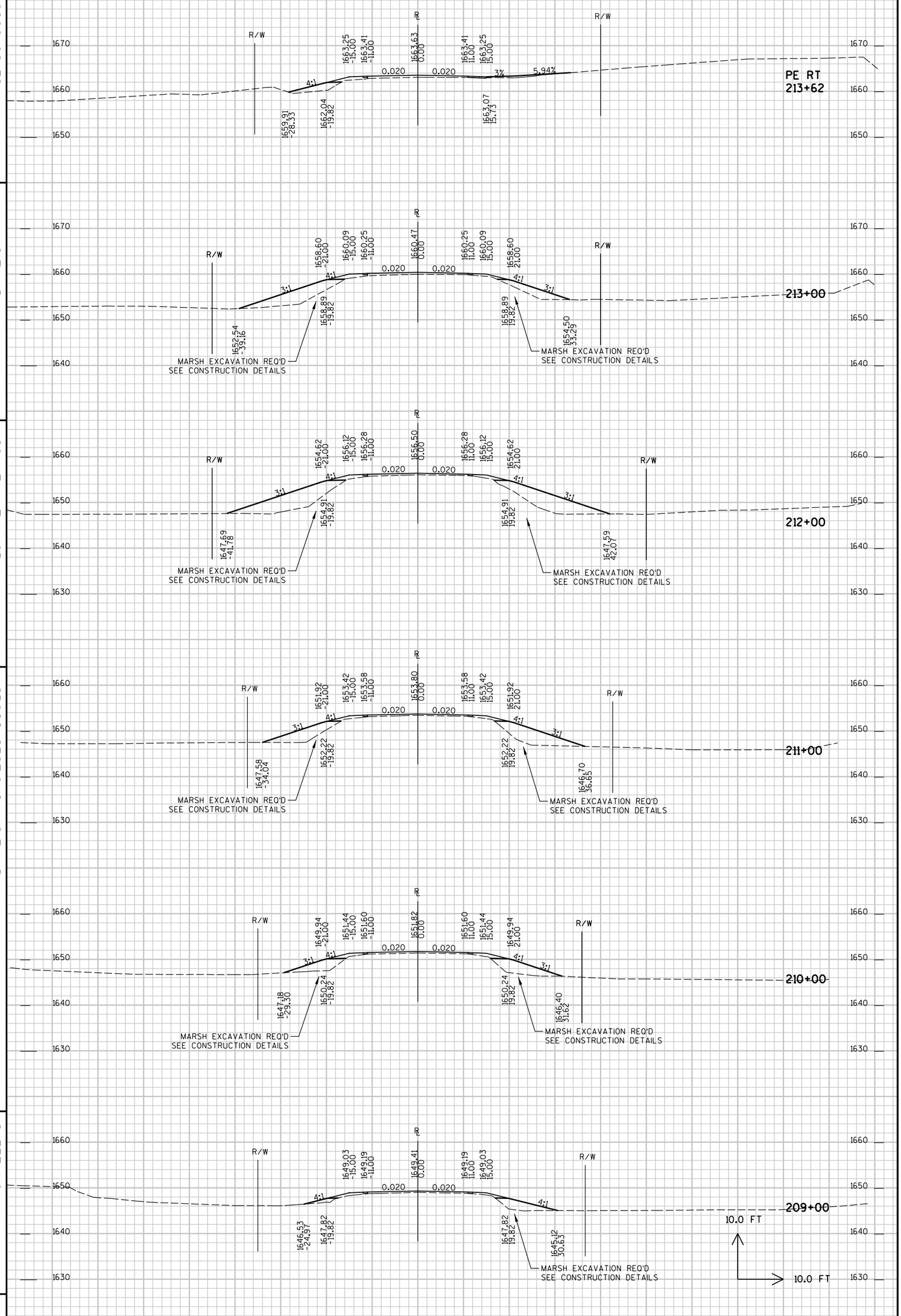

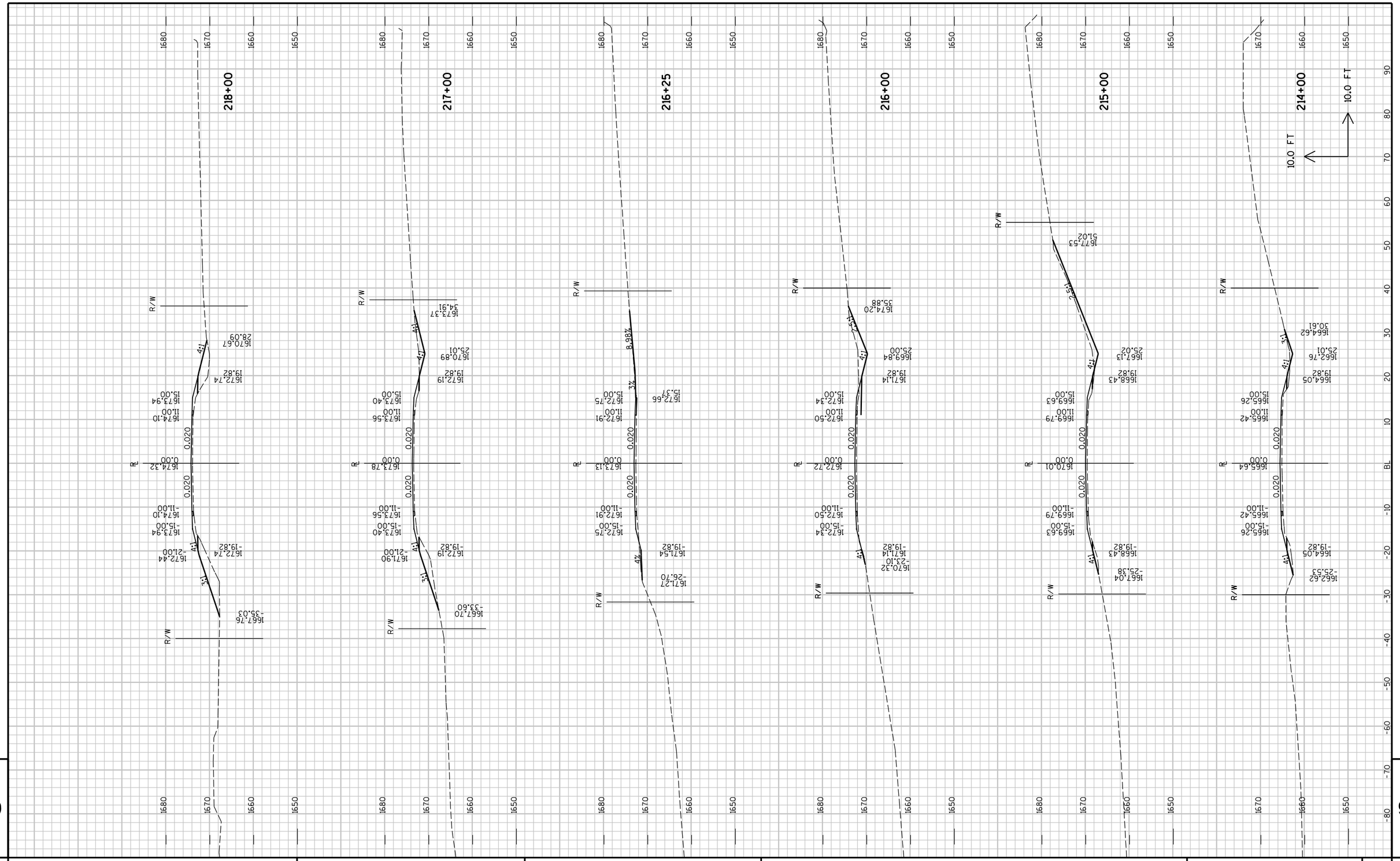

9

9

PROJECT NO : 8900-06-76	HWY : C.T.H. D	COUNTY : TAYLOR	CROSS SECTIONS - C.T.H. D	SHEET NO: 163	E

FILE NAME : P:\PT\T\Tayhd\108326\CAD\XBTAYD01.dgn PLOT TIME : 10:52:01 AM PLOT DATE : 1/30/2013 PLOT BY : SEH PLOT NAME : PLOT SCALE : N/A

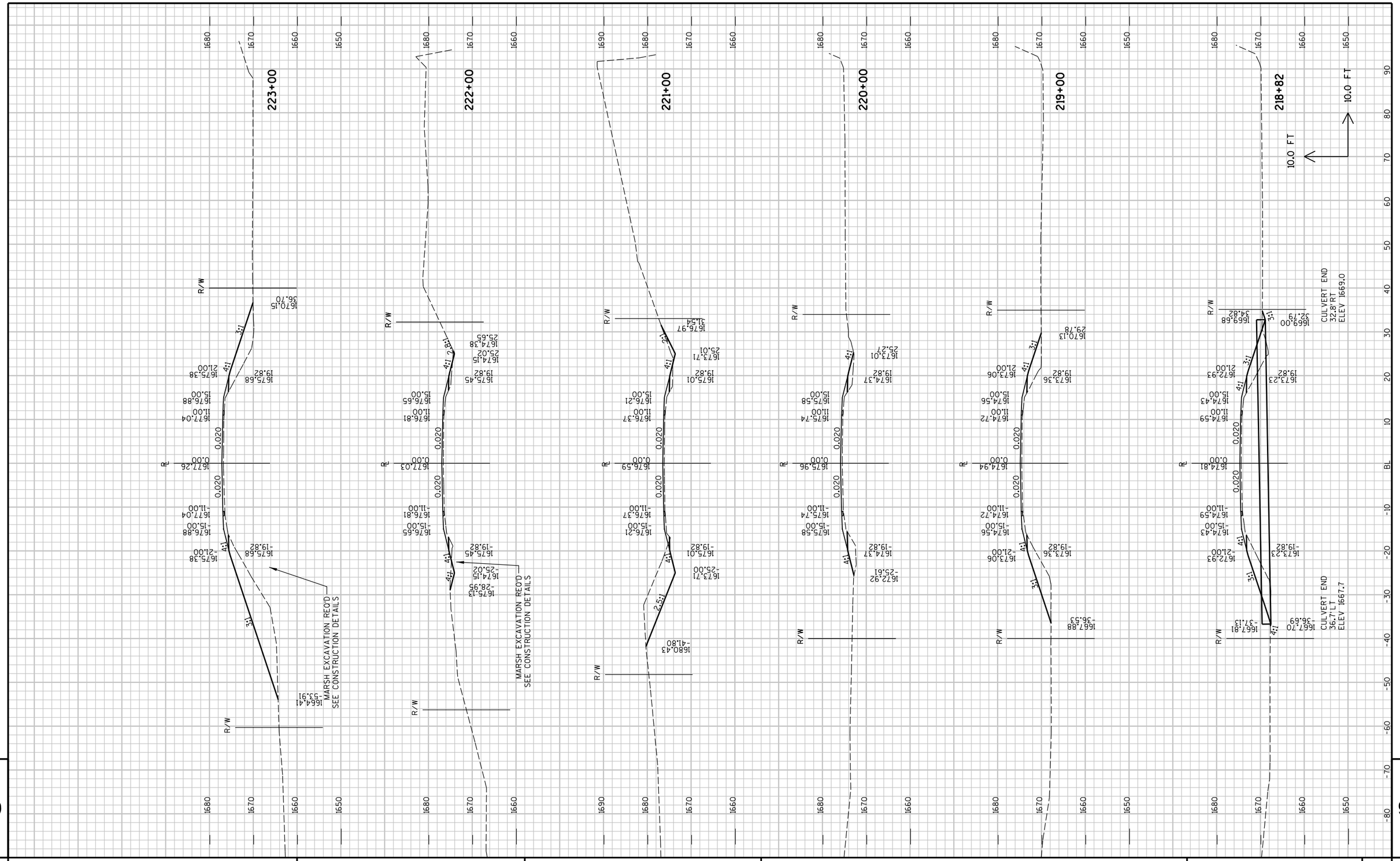

PROJECT NO : 8900-06-76	HWY : C.T.H. D	COUNTY : TAYLOR	CROSS SECTIONS - C.T.H. D	SHEET NO: 164	E

FILE NAME : P:\PT\T\Tayhd\108326\CAD\XBTAYD01.dgn PLOT TIME : 10:52:01 AM PLOT DATE : 1/30/2013 PLOT BY : SEH PLOT NAME : PLOT SCALE : N/A

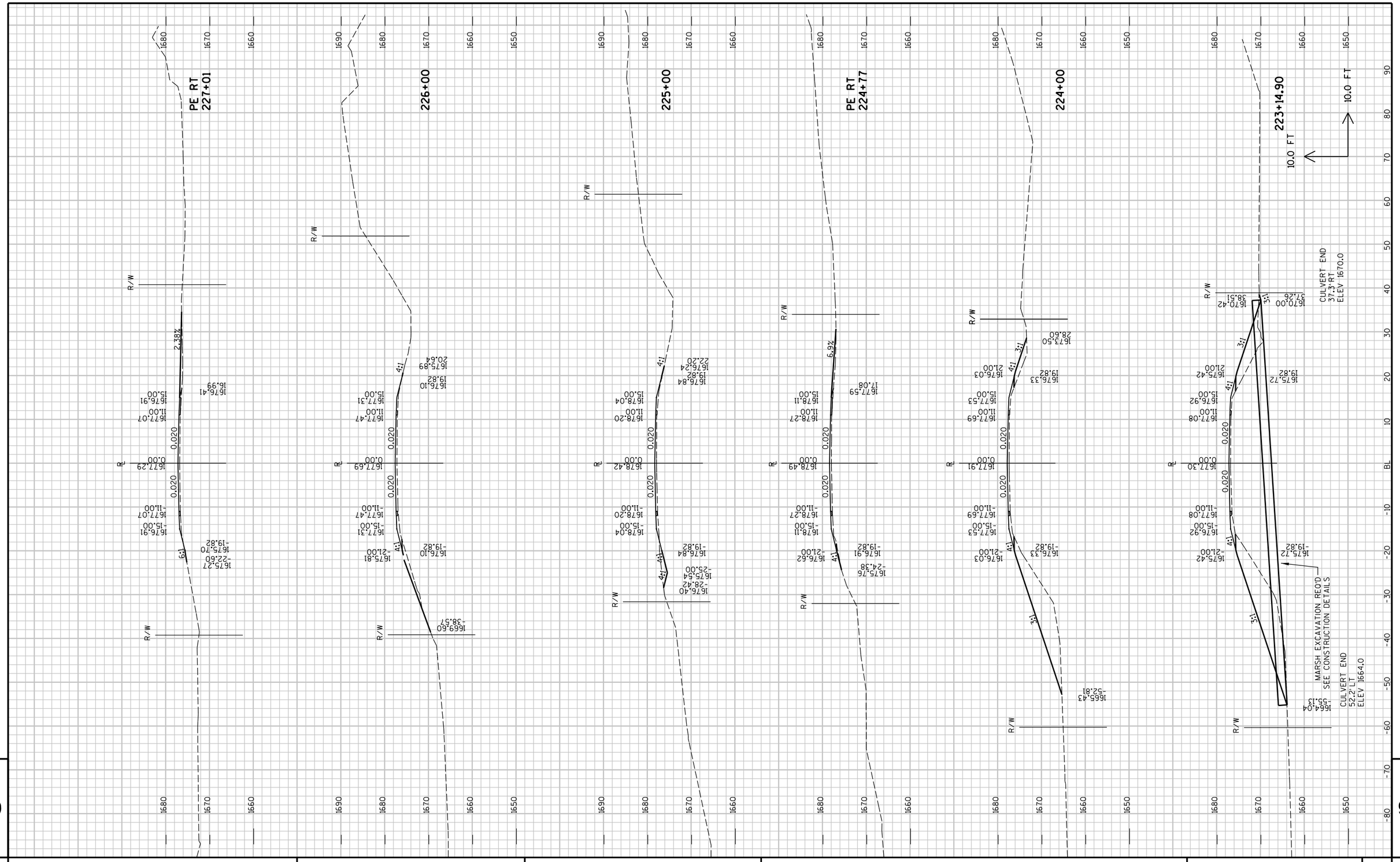

PROJECT NO : 8900-06-76	HWY : C.T.H. D	COUNTY : TAYLOR	CROSS SECTIONS - C.T.H. D	SHEET NO: 165 E

FILE NAME : P:\PT\T\Tayhd\108326\CAD\XBTAYD01.dgn PLOT TIME : 10:52:01 AM PLOT DATE : 1/30/2013 PLOT BY : SEH PLOT NAME : PLOT SCALE : N/A

PROJECT NO : 8900-06-76	HWY : C.T.H. D	COUNTY : TAYLOR	CROSS SECTIONS - C.T.H. D	SHEET NO: 166	E

FILE NAME : P:\PT\T\Tayhd\108326\CAD\XBTAYD01.dgn PLOT TIME : 10:52:01 AM PLOT DATE : 1/30/2013 PLOT BY : SEH PLOT NAME : PLOT SCALE : N/A

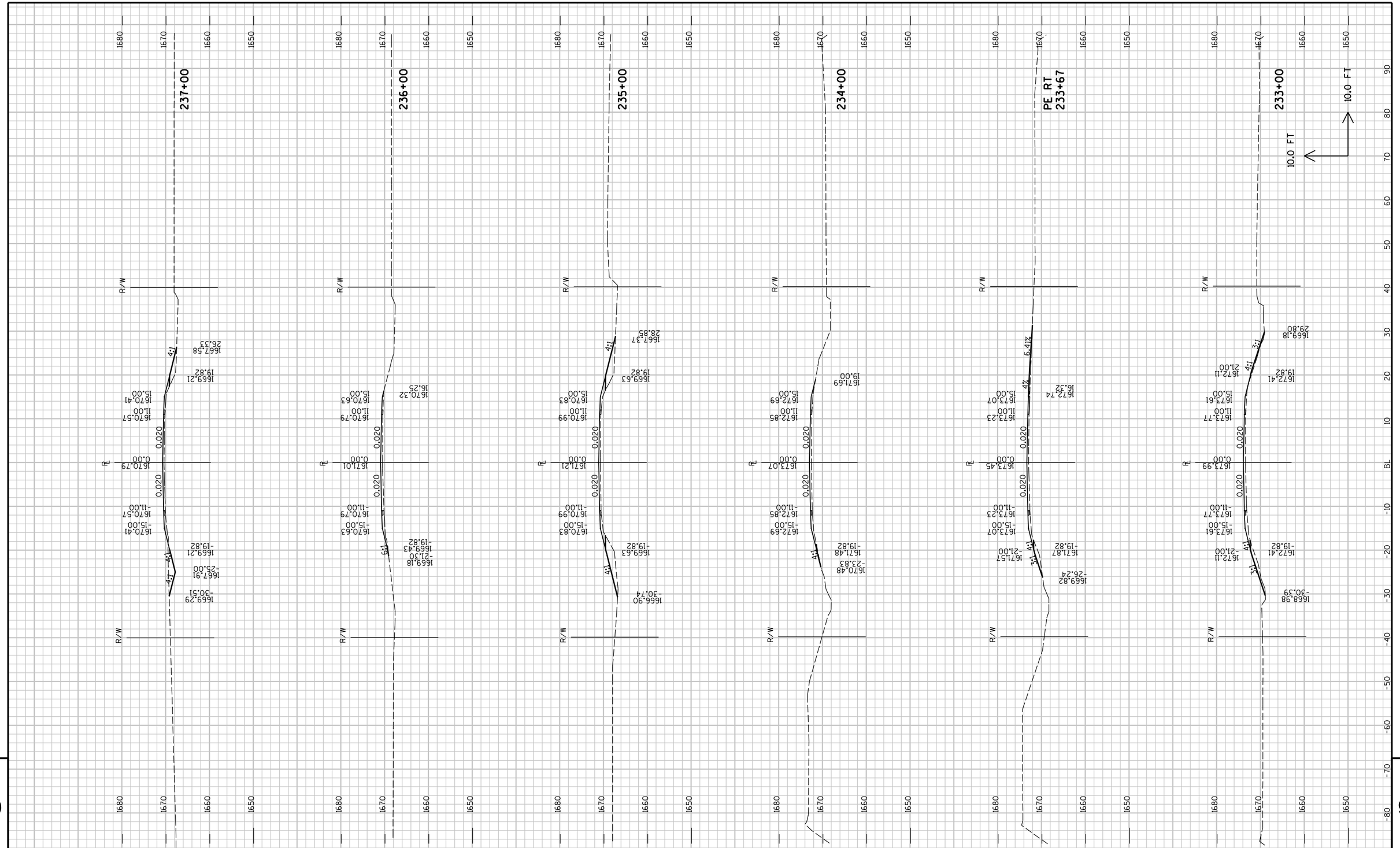

9

9

PROJECT NO : 8900-06-76	HWY : C.T.H. D	COUNTY : TAYLOR	CROSS SECTIONS - C.T.H. D	SHEET NO:	E

FILE NAME : P:\PT\T\Tayhd\108326\CAD\XBTAYD01.dgn PLOT TIME : 10:52:01 AM PLOT DATE : 1/30/2013 PLOT BY : SEH PLOT NAME : PLOT SCALE : N/A

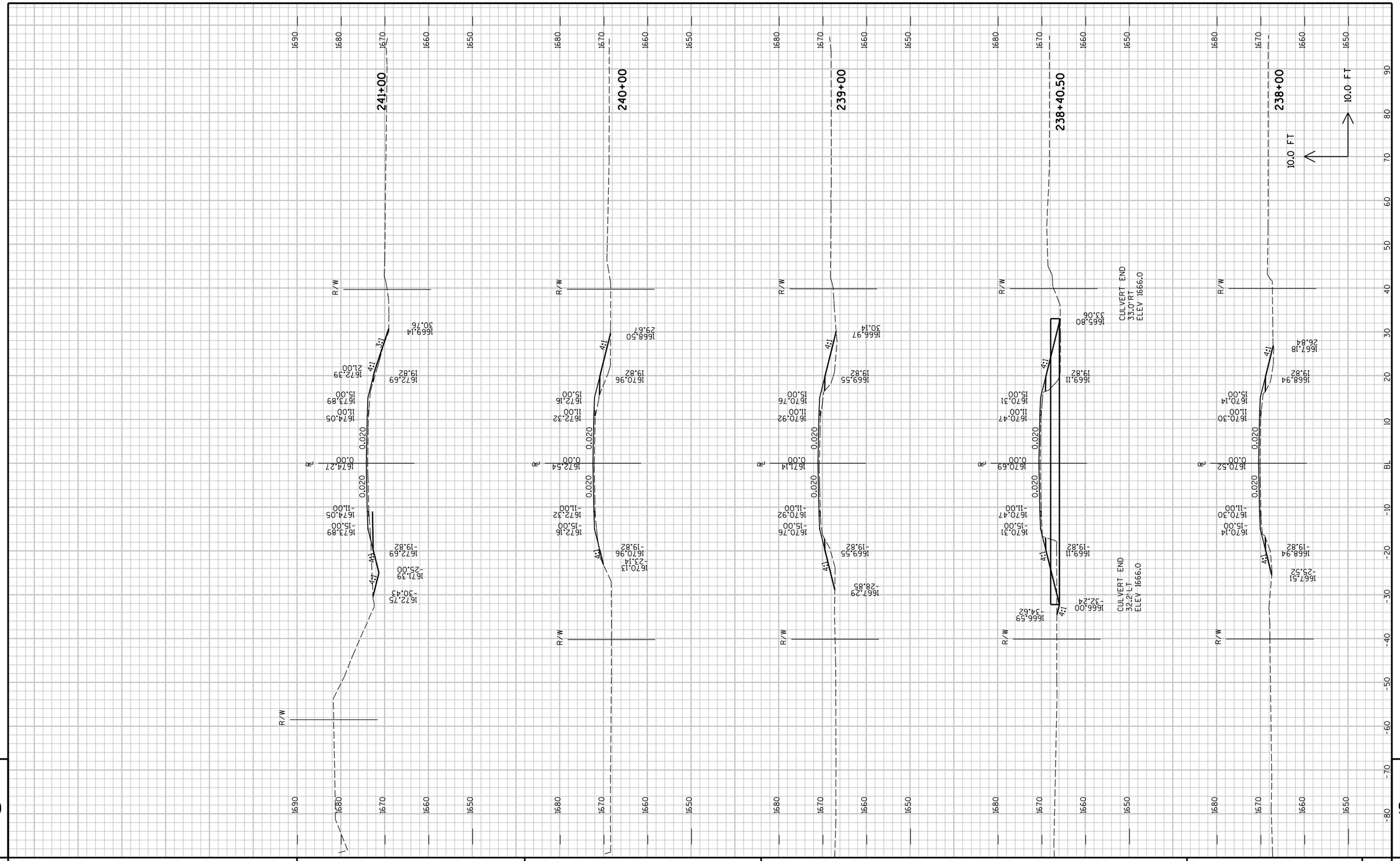

PROJECT NO : 8900-06-76	HWY : C.T.H. D	COUNTY : TAYLOR	CROSS SECTIONS - C.T.H. D	SHEET NO: 168	E

FILE NAME : P:\PT\T\Tayhd\108326\CAD\XBTAYD01.dgn PLOT TIME : 10:52:02 AM PLOT DATE : 1/30/2013 PLOT BY : SEH PLOT NAME : PLOT SCALE : N/A

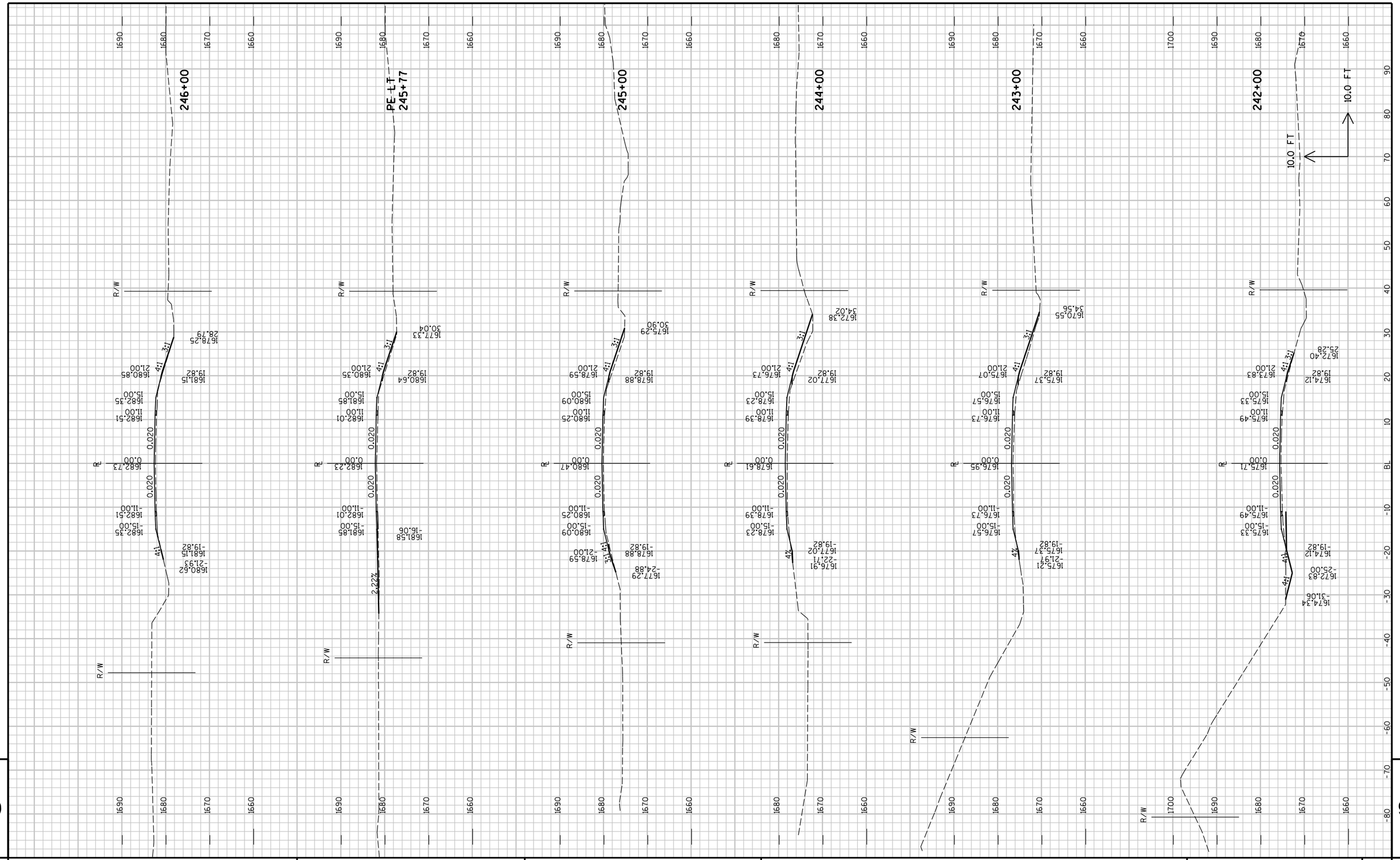

9

PROJECT NO : 8900-06-76	HWY : C.T.H. D	COUNTY : TAYLOR	CROSS SECTIONS - C.T.H. D	SHEET NO: 169	E

9

FILE NAME : P:\PT\T\Tayhd\108326\CAD\XBTAYD01.dgn PLOT TIME : 10:52:02 AM PLOT DATE : 1/30/2013 PLOT BY : SEH PLOT NAME : PLOT SCALE : N/A

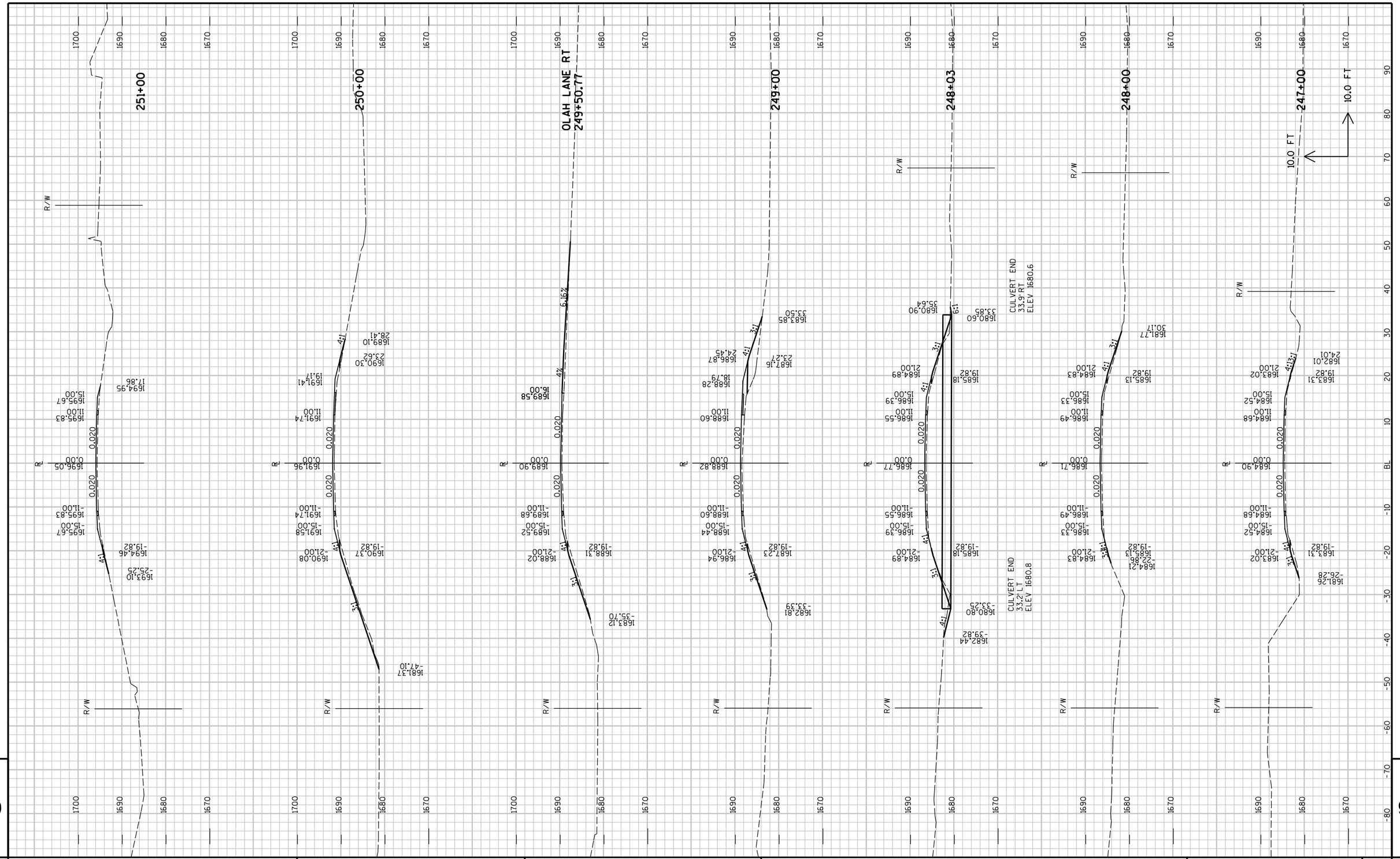

PROJECT NO : 8900-06-76	HWY : C.T.H. D	COUNTY : TAYLOR	CROSS SECTIONS - C.T.H. D	SHEET NO: 170 E

FILE NAME : P:\PT\T\Tayhd\108326\CAD\XBTAYD01.dgn PLOT TIME : 10:52:02 AM PLOT DATE : 1/30/2013 PLOT BY : SEH PLOT NAME : PLOT SCALE : N/A

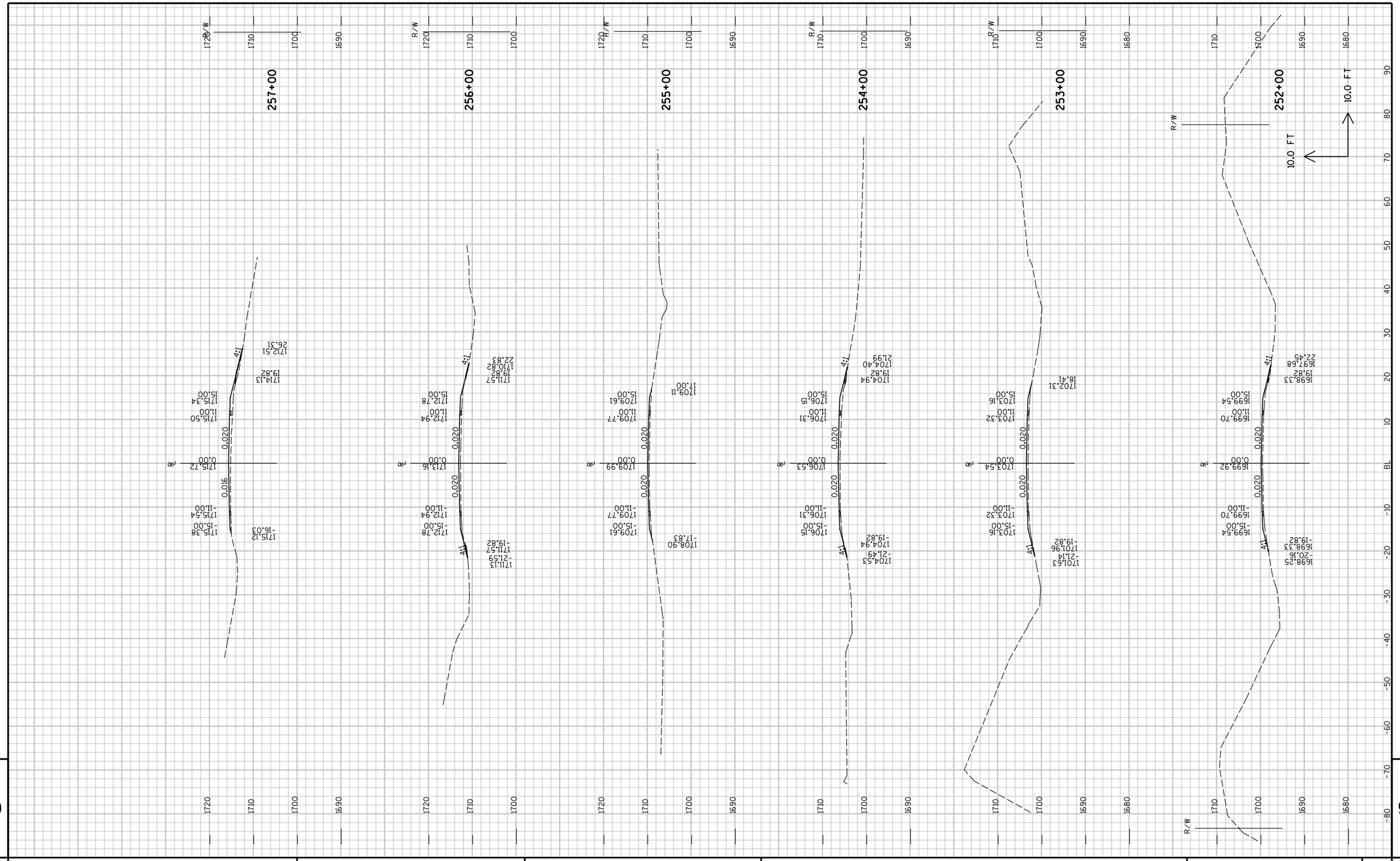

PROJECT NO : 8900-06-76	HWY : C.T.H. D	COUNTY : TAYLOR	CROSS SECTIONS - C.T.H. D	SHEET NO: 171	E

FILE NAME : P:\PT\T\Tayhd\108326\CAD\XBTAYD01.dgn PLOT TIME : 10:52:02 AM PLOT DATE : 1/30/2013 PLOT BY : SEH PLOT NAME : PLOT SCALE : N/A

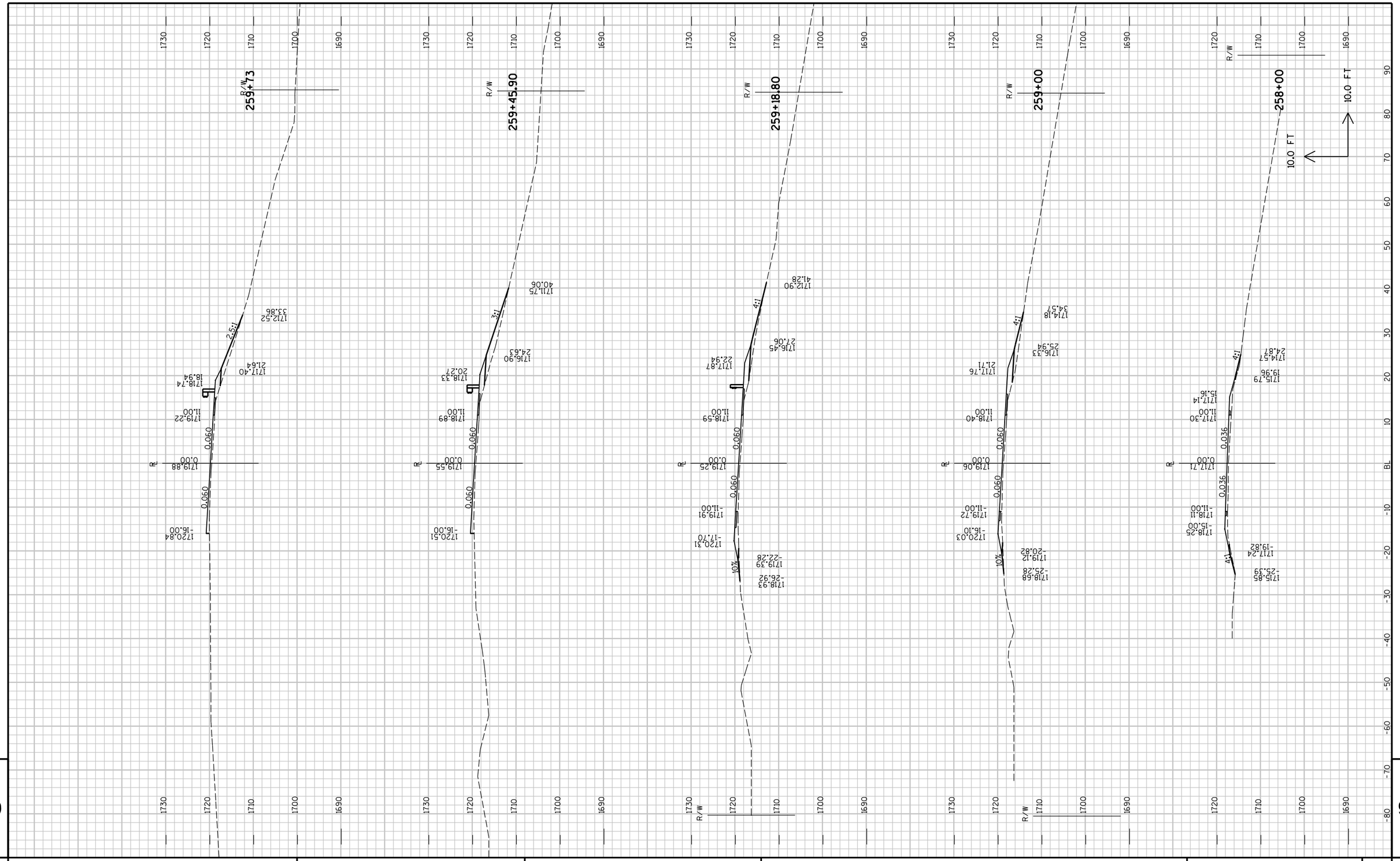

PROJECT NO : 8900-06-76	HWY : C.T.H. D	COUNTY : TAYLOR	CROSS SECTIONS - C.T.H. D	SHEET NO: 172 E

FILE NAME : P:\PT\T\Tayhd\108326\CAD\XBTAYD01.dgn PLOT TIME : 10:52:03 AM PLOT DATE : 1/30/2013 PLOT BY : SEH PLOT NAME : PLOT SCALE : N/A

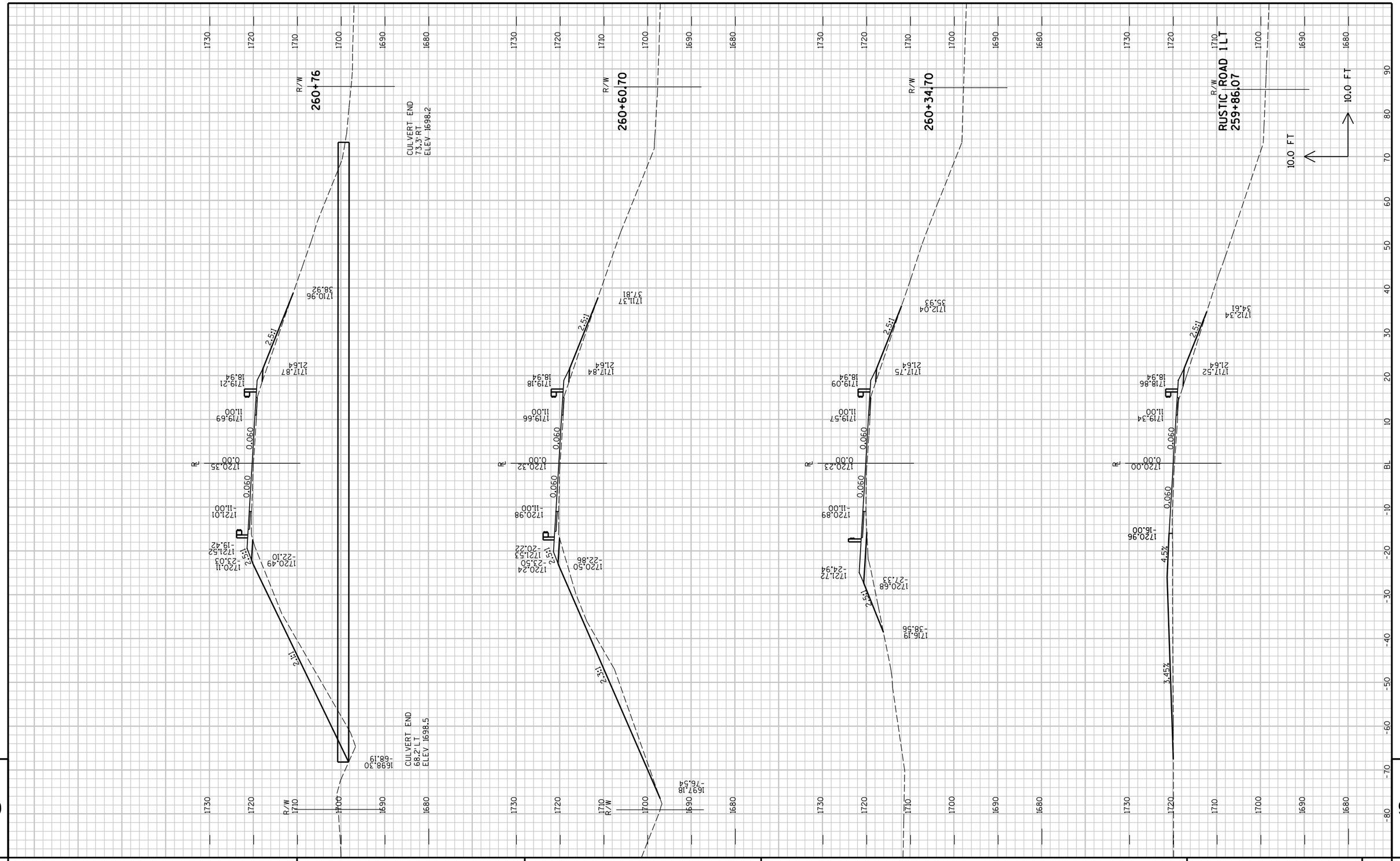

9

PROJECT NO : 8900-06-76	HWY : C.T.H. D	COUNTY : TAYLOR	CROSS SECTIONS - C.T.H. D	SHEET NO: 173	E

9

FILE NAME : P:\PT\T\Tayhd\108326\CAD\XBTAYD01.dgn PLOT TIME : 10:52:03 AM PLOT DATE : 1/30/2013 PLOT BY : SEH PLOT NAME : PLOT SCALE : N/A

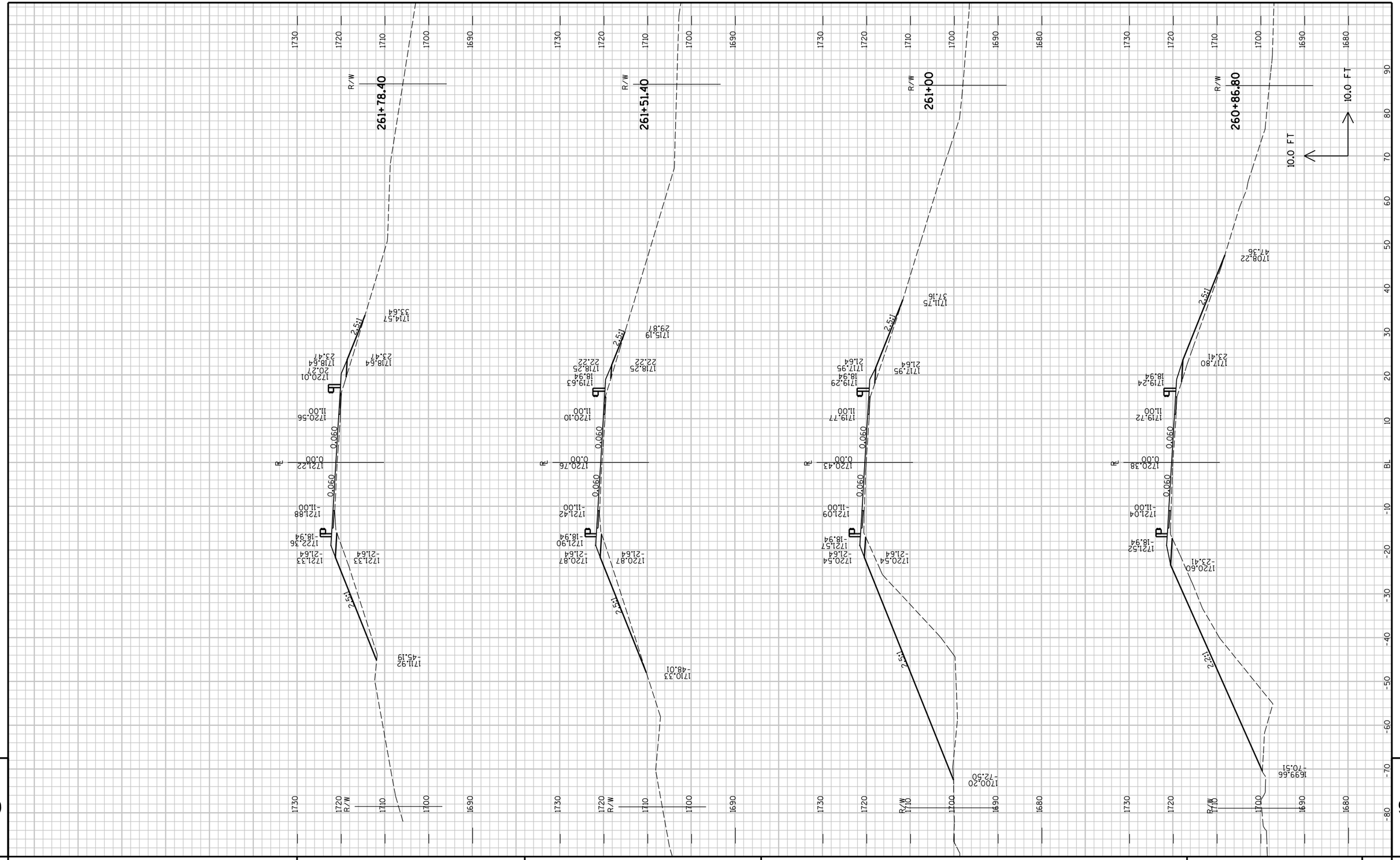

PROJECT NO : 8900-06-76	HWY : C.T.H. D	COUNTY : TAYLOR	CROSS SECTIONS - C.T.H. D	SHEET NO:	E

FILE NAME : P:\PT\T\Tayhd\108326\CAD\XBTAYD01.dgn PLOT TIME : 10:52:03 AM PLOT DATE : 1/30/2013 PLOT BY : SEH PLOT NAME : PLOT SCALE : N/A

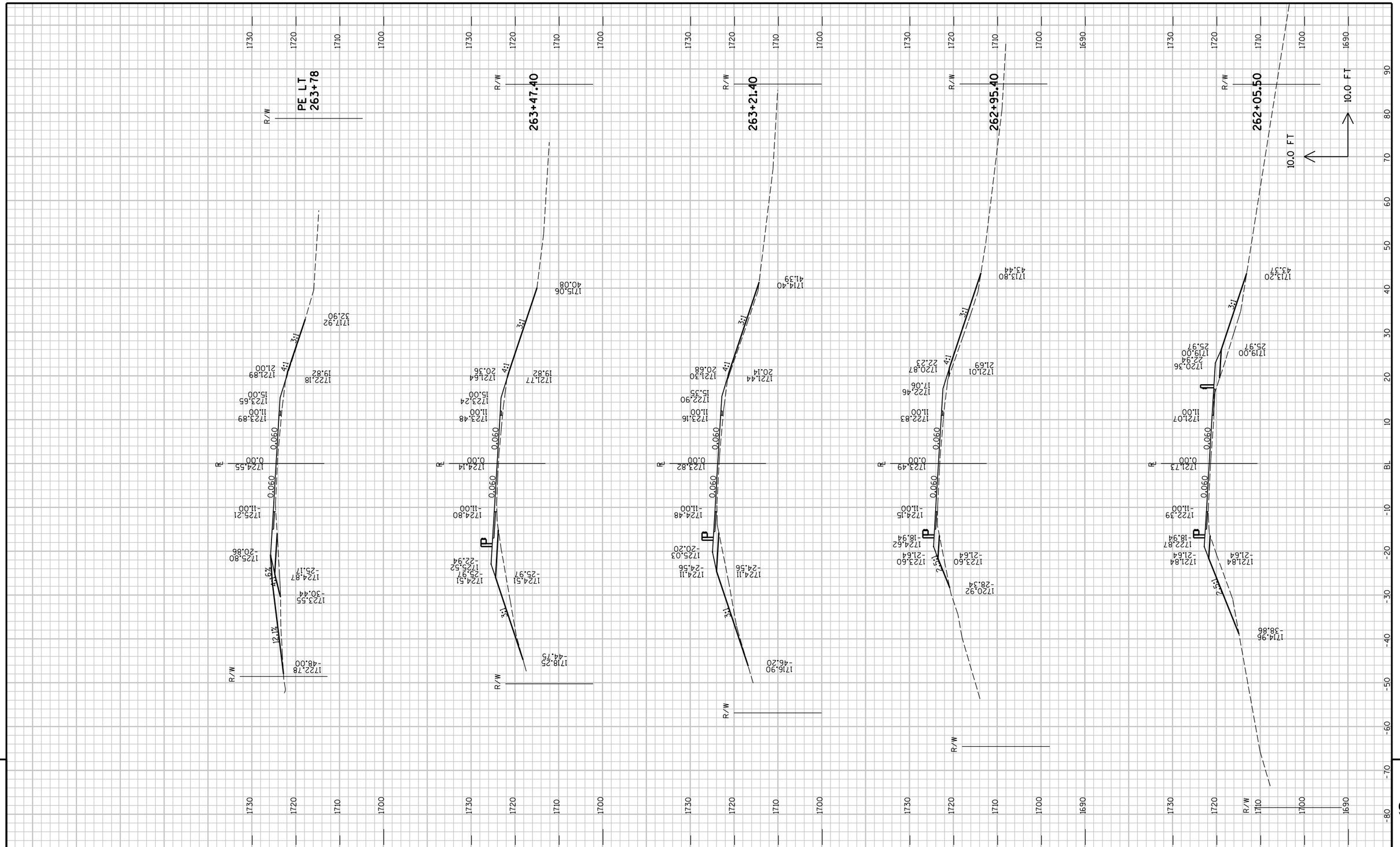

9

PROJECT NO : 8900-06-76	HWY : C.T.H. D	COUNTY : TAYLOR	CROSS SECTIONS - C.T.H. D	SHEET NO: 175	E

FILE NAME : P:\PT\T\Tayhd\108326\CAD\XBTAYD01.dgn PLOT TIME : 10:52:03 AM PLOT DATE : 1/30/2013 PLOT BY : SEH PLOT NAME : PLOT SCALE : N/A

9

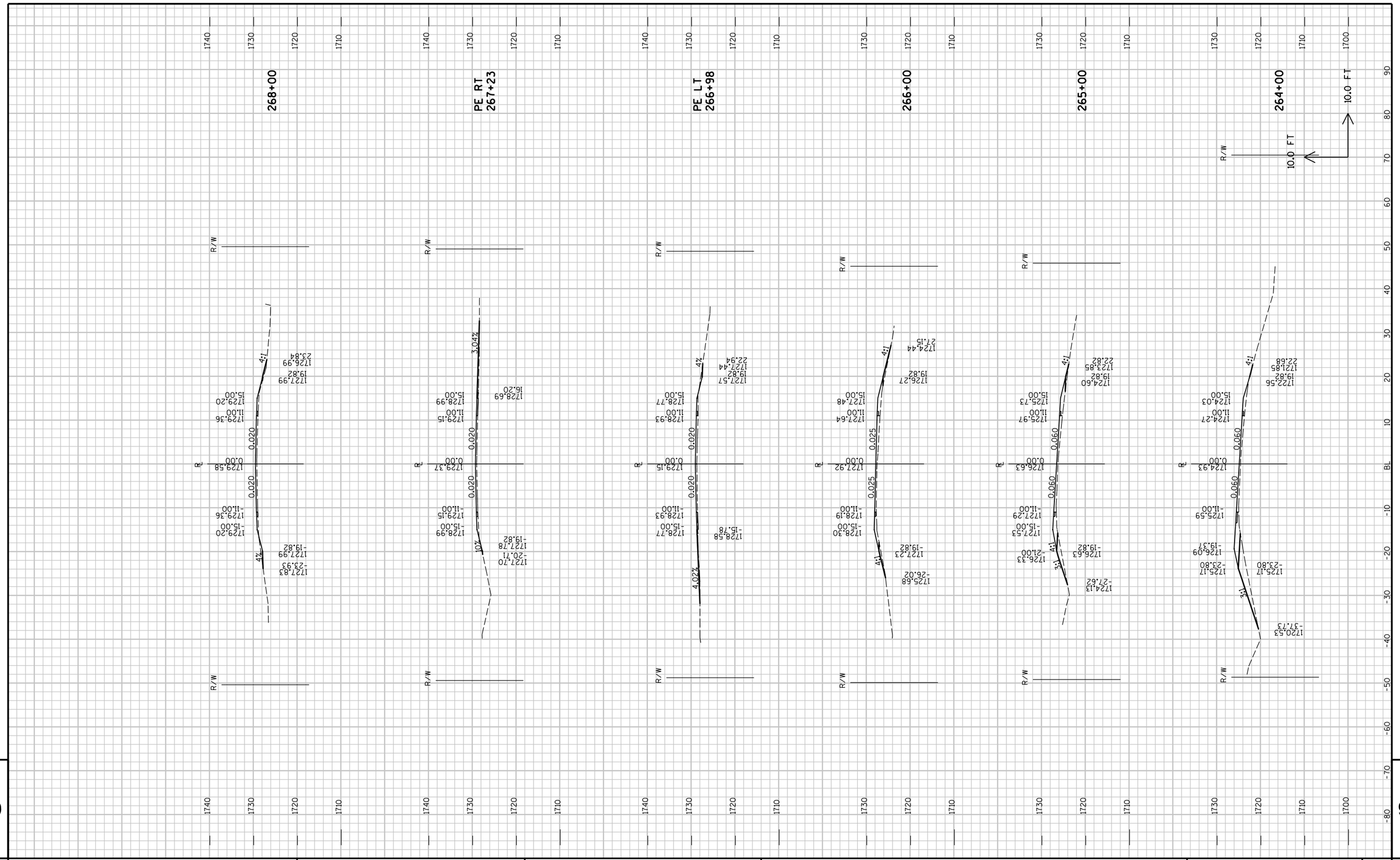

PROJECT NO : 8900-06-76	HWY : C.T.H. D	COUNTY : TAYLOR	CROSS SECTIONS - C.T.H. D	SHEET NO: 176 E

FILE NAME : P:\PT\T\Tayhd\108326\CAD\XBTAYD01.dgn PLOT TIME : 10:52:03 AM PLOT DATE : 1/30/2013 PLOT BY : SEH PLOT NAME : PLOT SCALE : N/A

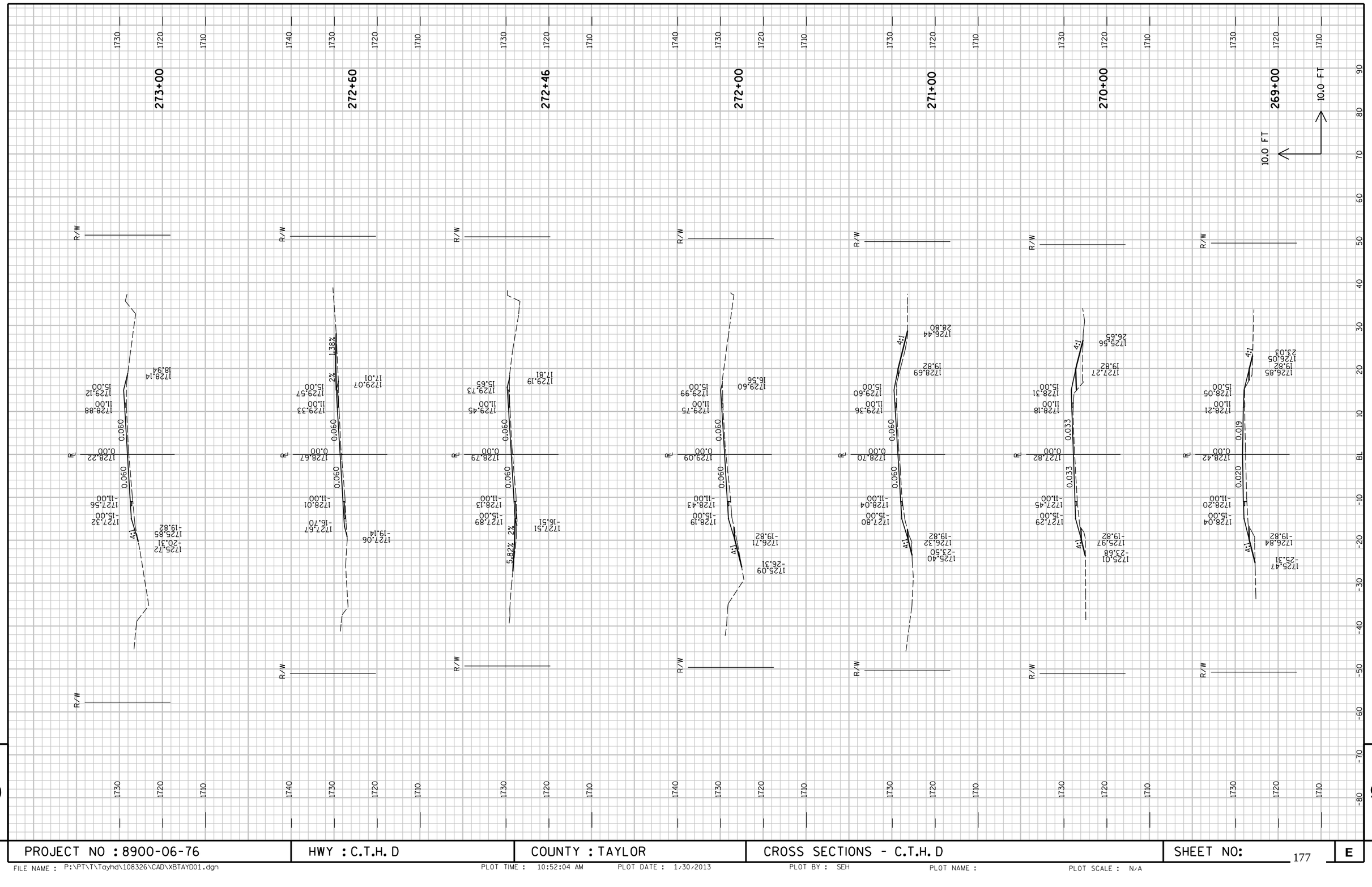

PROJECT NO : 8900-06-76	HWY : C.T.H. D	COUNTY : TAYLOR	CROSS SECTIONS - C.T.H. D	SHEET NO: 177 E

FILE NAME : P:\PT\T\Tayhd\108326\CAD\XBTAYD01.dgn PLOT TIME : 10:52:04 AM PLOT DATE : 1/30/2013 PLOT BY : SEH PLOT NAME : PLOT SCALE : N/A

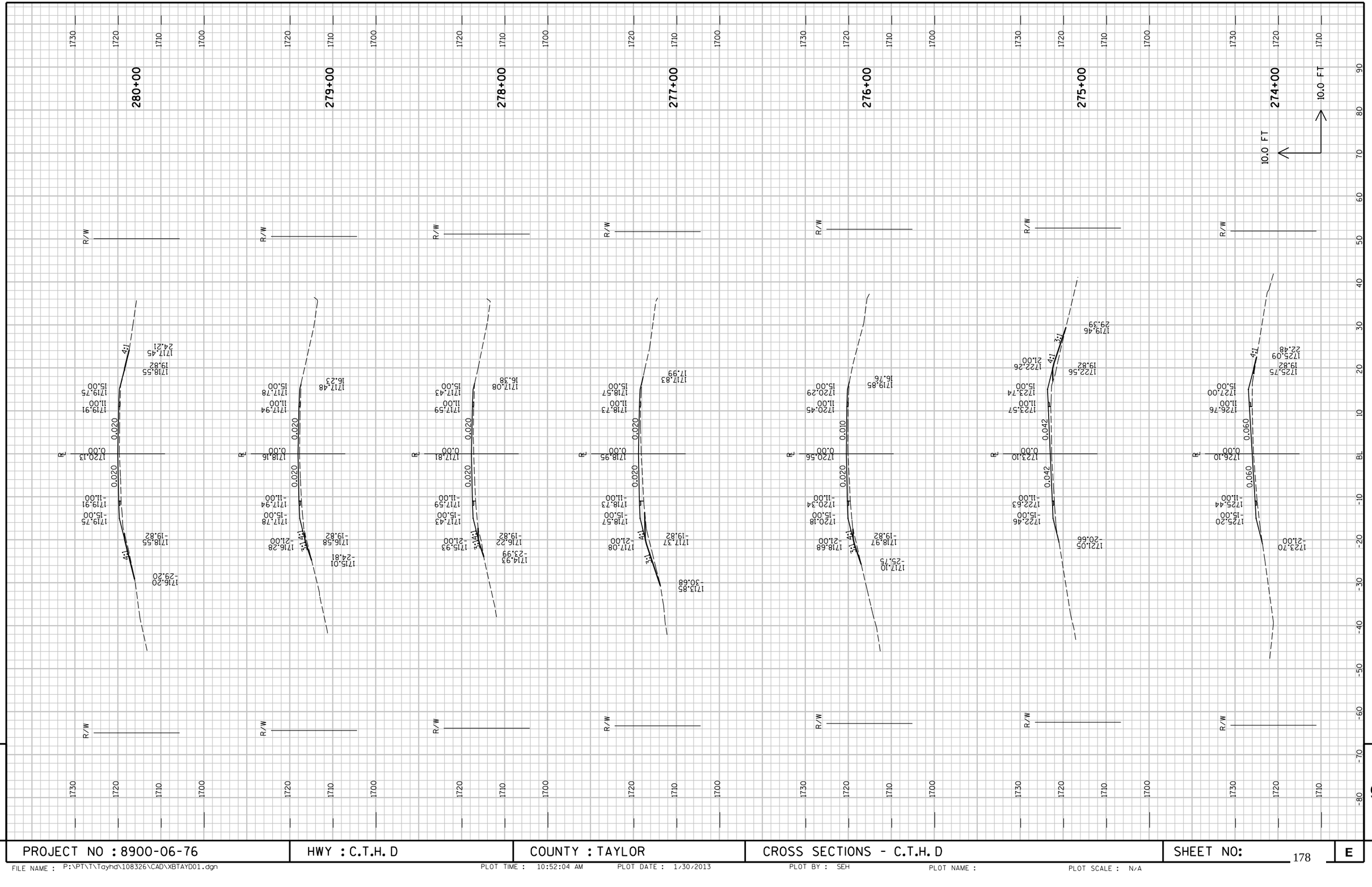

9

9

PROJECT NO : 8900-06-76	HWY : C.T.H. D	COUNTY : TAYLOR	CROSS SECTIONS - C.T.H. D	SHEET NO:	E

FILE NAME : P:\PT\T\Tayhd\108326\CAD\XBTAYD01.dgn PLOT TIME : 10:52:04 AM PLOT DATE : 1/30/2013 PLOT BY : SEH PLOT NAME : PLOT SCALE : N/A

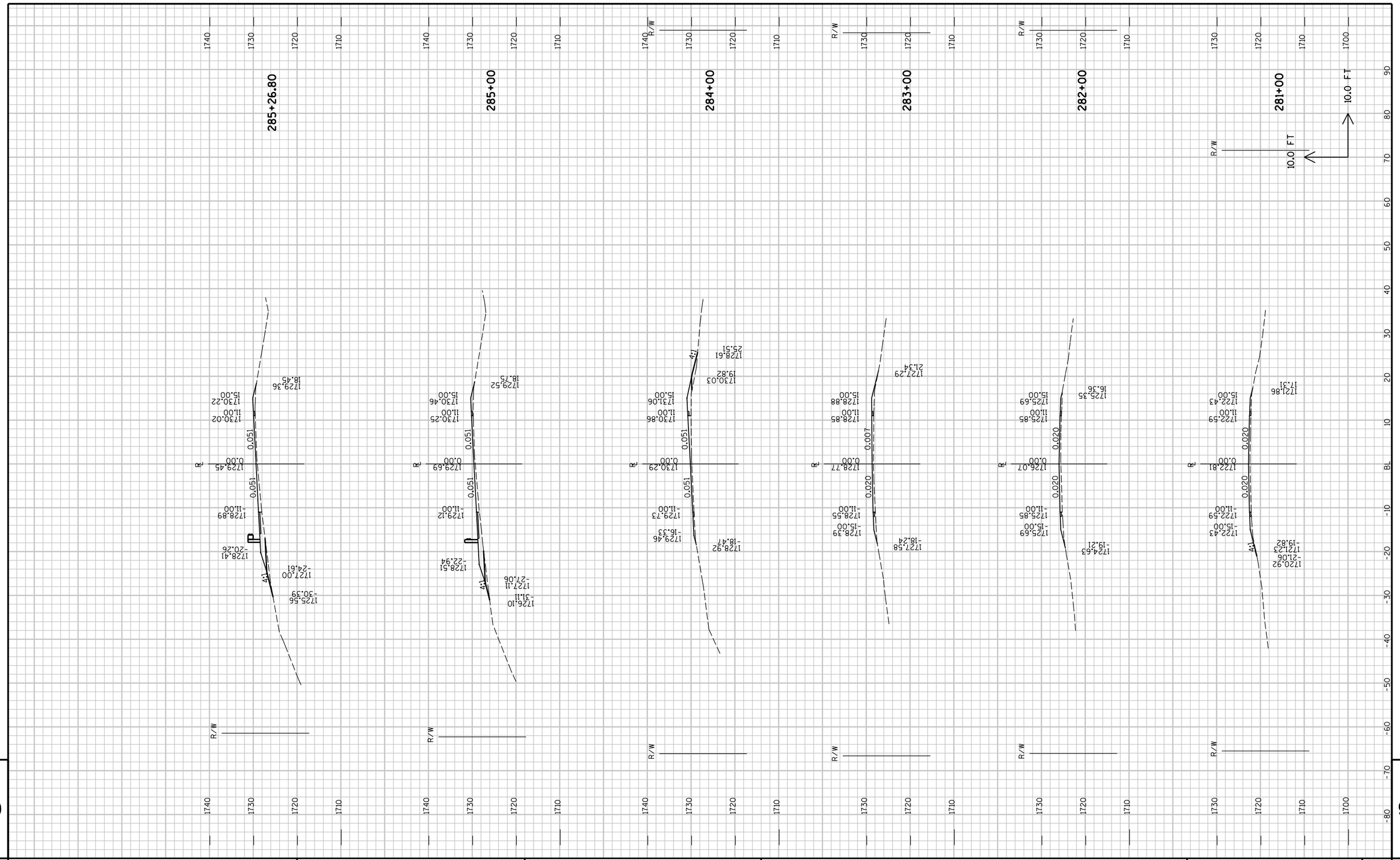

PROJECT NO : 8900-06-76	HWY : C.T.H. D	COUNTY : TAYLOR	CROSS SECTIONS - C.T.H. D	SHEET NO: 179	E

FILE NAME : P:\PT\T\Tayhd\108326\CAD\XBTAYD01.dgn PLOT TIME : 10:52:04 AM PLOT DATE : 1/30/2013 PLOT BY : SEH PLOT NAME : PLOT SCALE : N/A

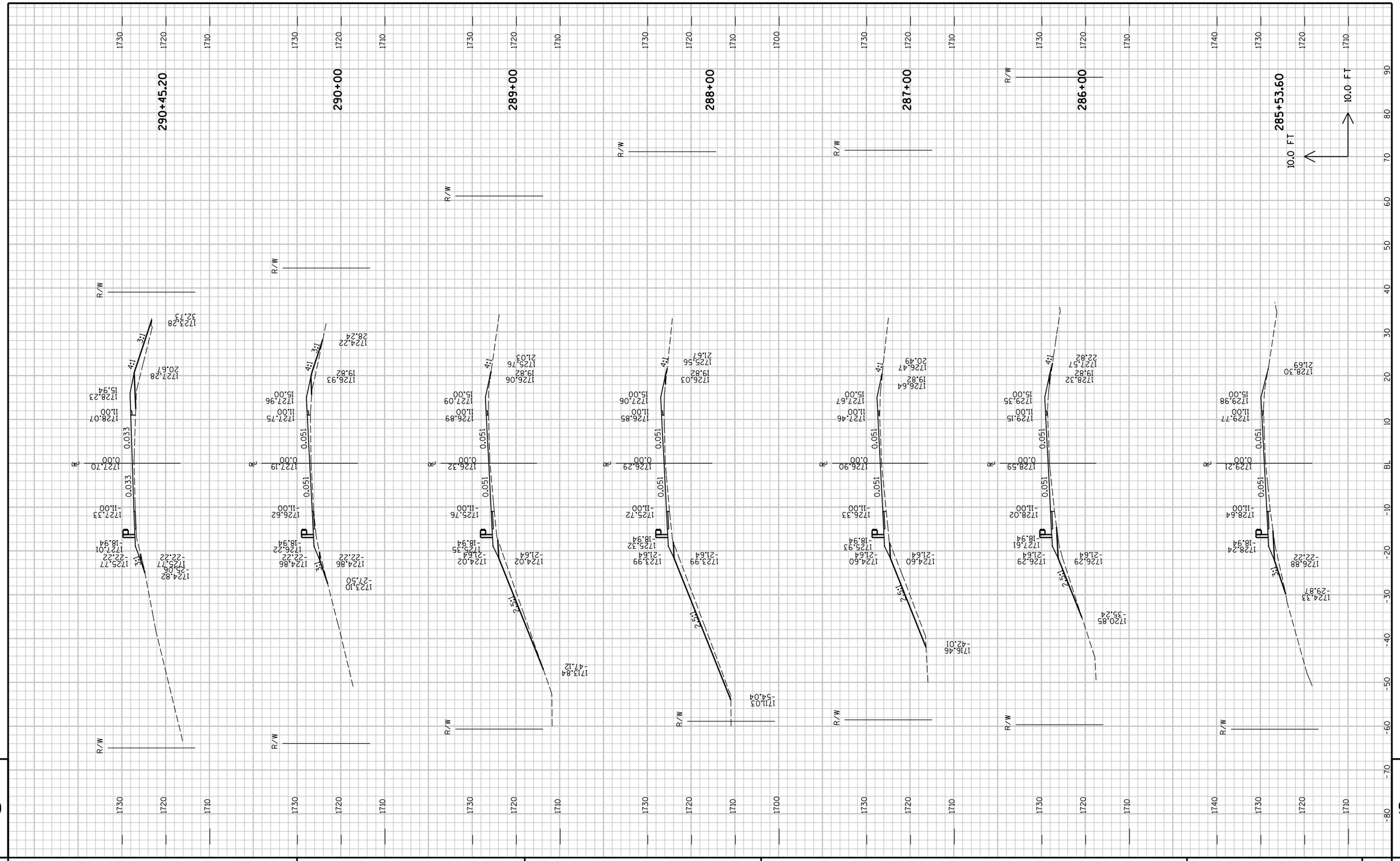

PROJECT NO : 8900-06-76	HWY : C.T.H. D	COUNTY : TAYLOR	CROSS SECTIONS - C.T.H. D	SHEET NO: 180 E

FILE NAME : P:\PT\T\Tayhd\108326\CAD\XBTAYD01.dgn PLOT TIME : 10:52:04 AM PLOT DATE : 1/30/2013 PLOT BY : SEH PLOT NAME : PLOT SCALE : N/A

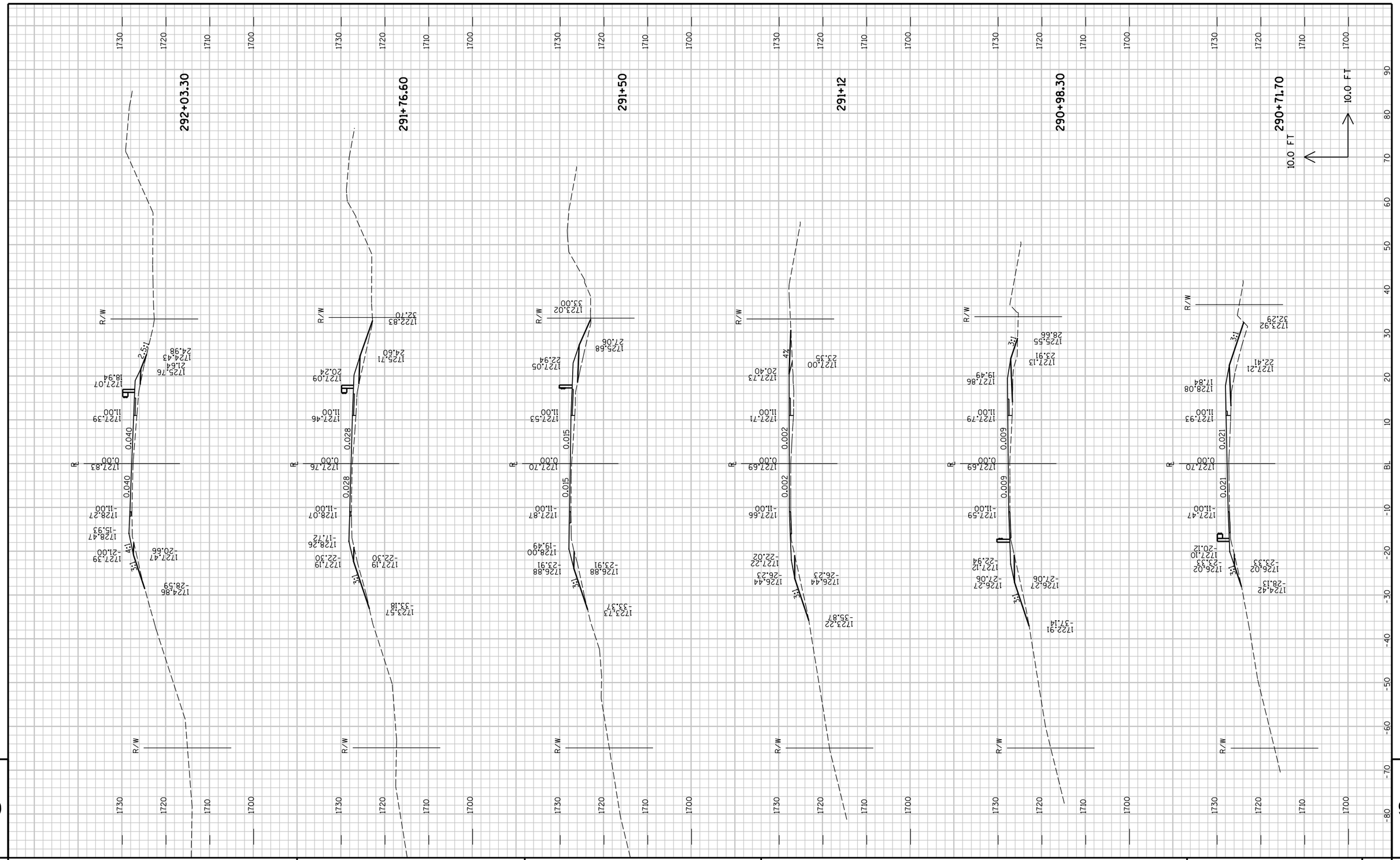

PROJECT NO : 8900-06-76	HWY : C.T.H. D	COUNTY : TAYLOR	CROSS SECTIONS - C.T.H. D	SHEET NO: 181	E

FILE NAME : P:\PT\T\Tayhd\108326\CAD\XBTAYD01.dgn PLOT TIME : 10:52:04 AM PLOT DATE : 1/30/2013 PLOT BY : SEH PLOT NAME : PLOT SCALE : N/A

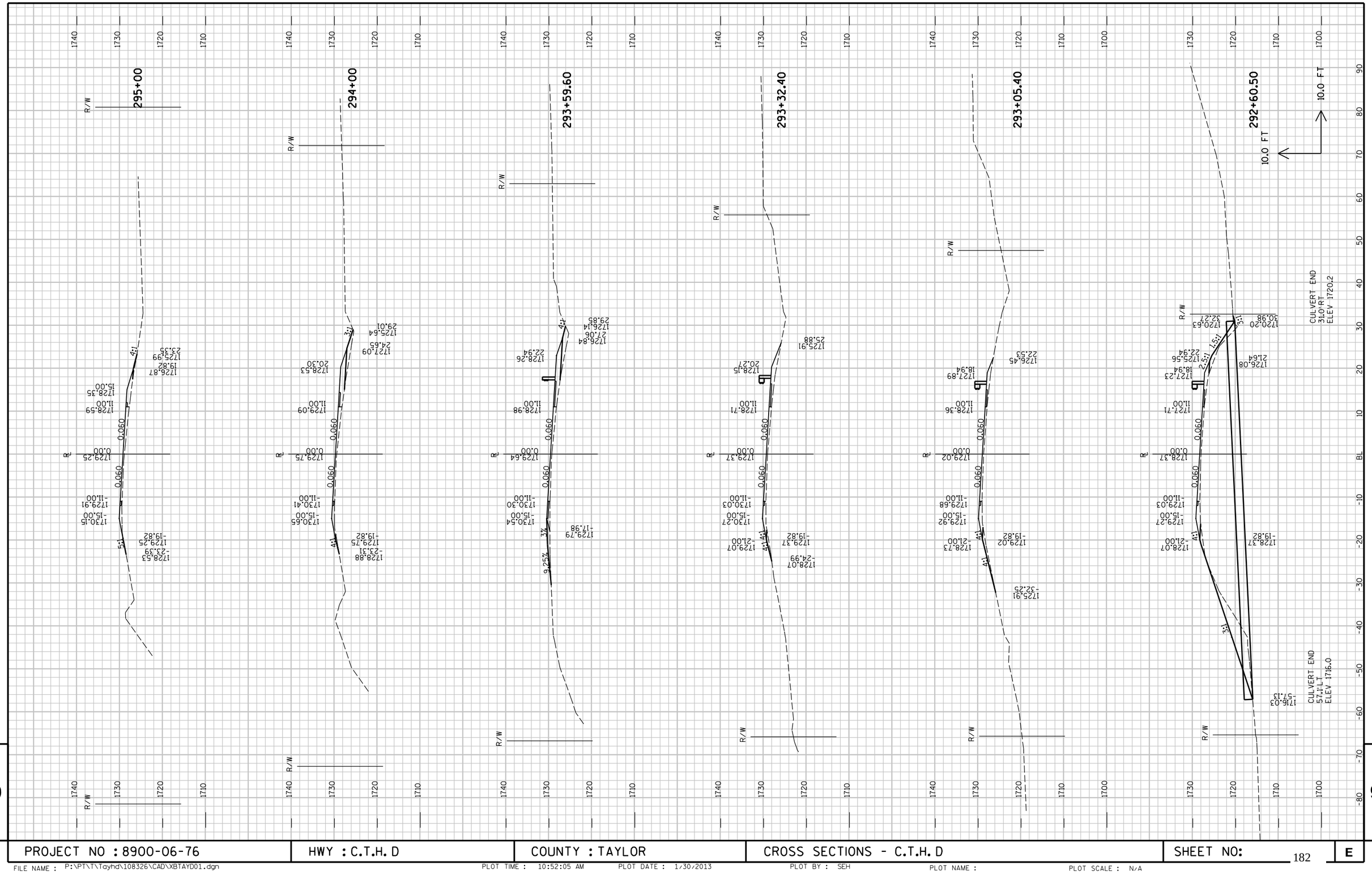

PROJECT NO : 8900-06-76	HWY : C.T.H. D	COUNTY : TAYLOR	CROSS SECTIONS - C.T.H. D	SHEET NO: 182 E

FILE NAME : P:\PT\T\Tayhd\108326\CAD\XBTAYD01.dgn PLOT TIME : 10:52:05 AM PLOT DATE : 1/30/2013 PLOT BY : SEH PLOT NAME : PLOT SCALE : N/A

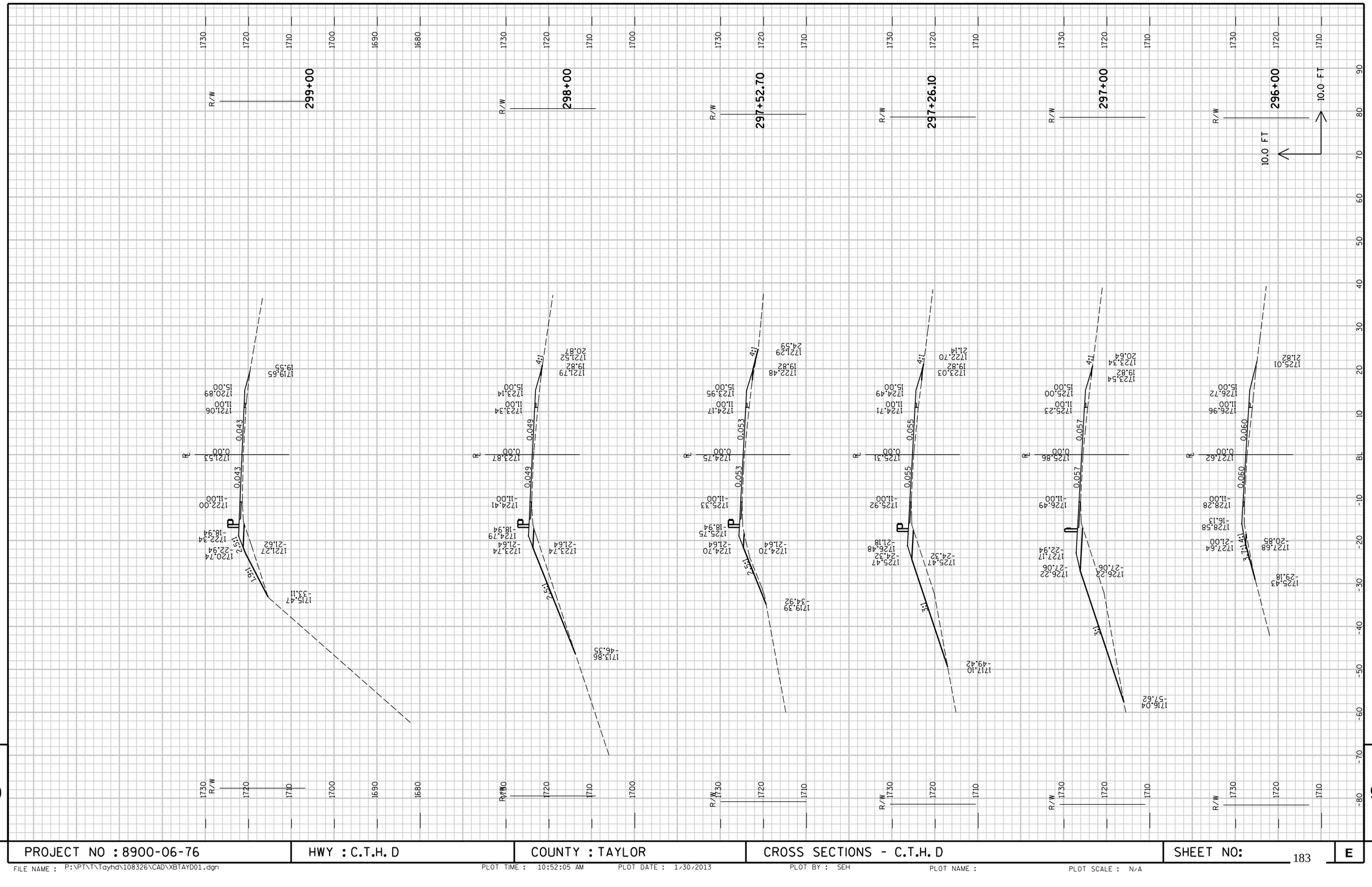

PROJECT NO : 8900-06-76	HWY : C.T.H. D	COUNTY : TAYLOR	CROSS SECTIONS - C.T.H. D	SHEET NO: 183 E

FILE NAME : P:\PT\T\Tayhd\108326\CAD\XBTAYD01.dgn PLOT TIME : 10:52:05 AM PLOT DATE : 1/30/2013 PLOT BY : SEH PLOT NAME : PLOT SCALE : N/A

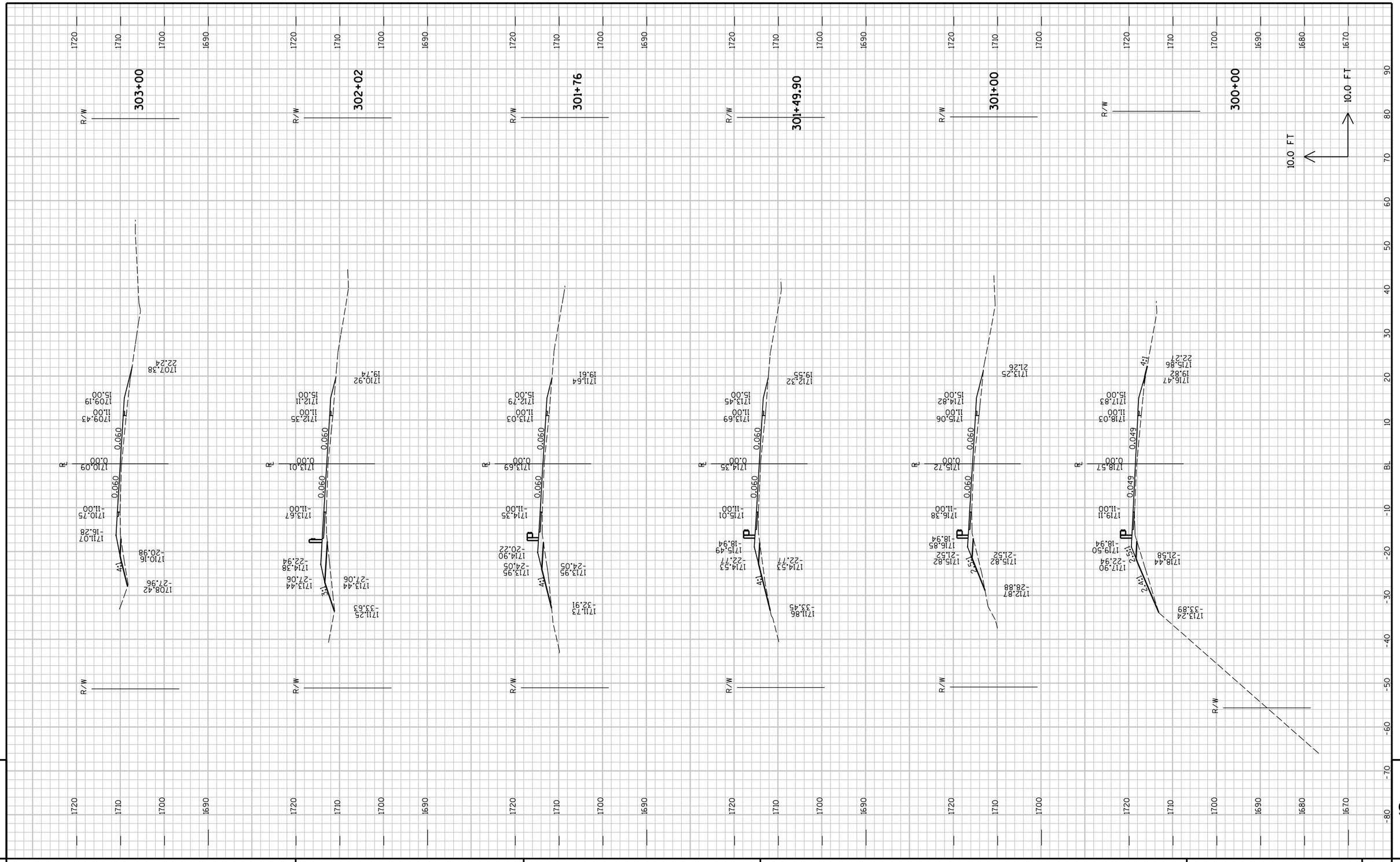

PROJECT NO : 8900-06-76	HWY : C.T.H. D	COUNTY : TAYLOR	CROSS SECTIONS - C.T.H. D	SHEET NO: 184	E

FILE NAME : P:\PT\T\Tayhd\108326\CAD\XBTAYD01.dgn PLOT TIME : 10:52:05 AM PLOT DATE : 1/30/2013 PLOT BY : SEH PLOT NAME : PLOT SCALE : N/A

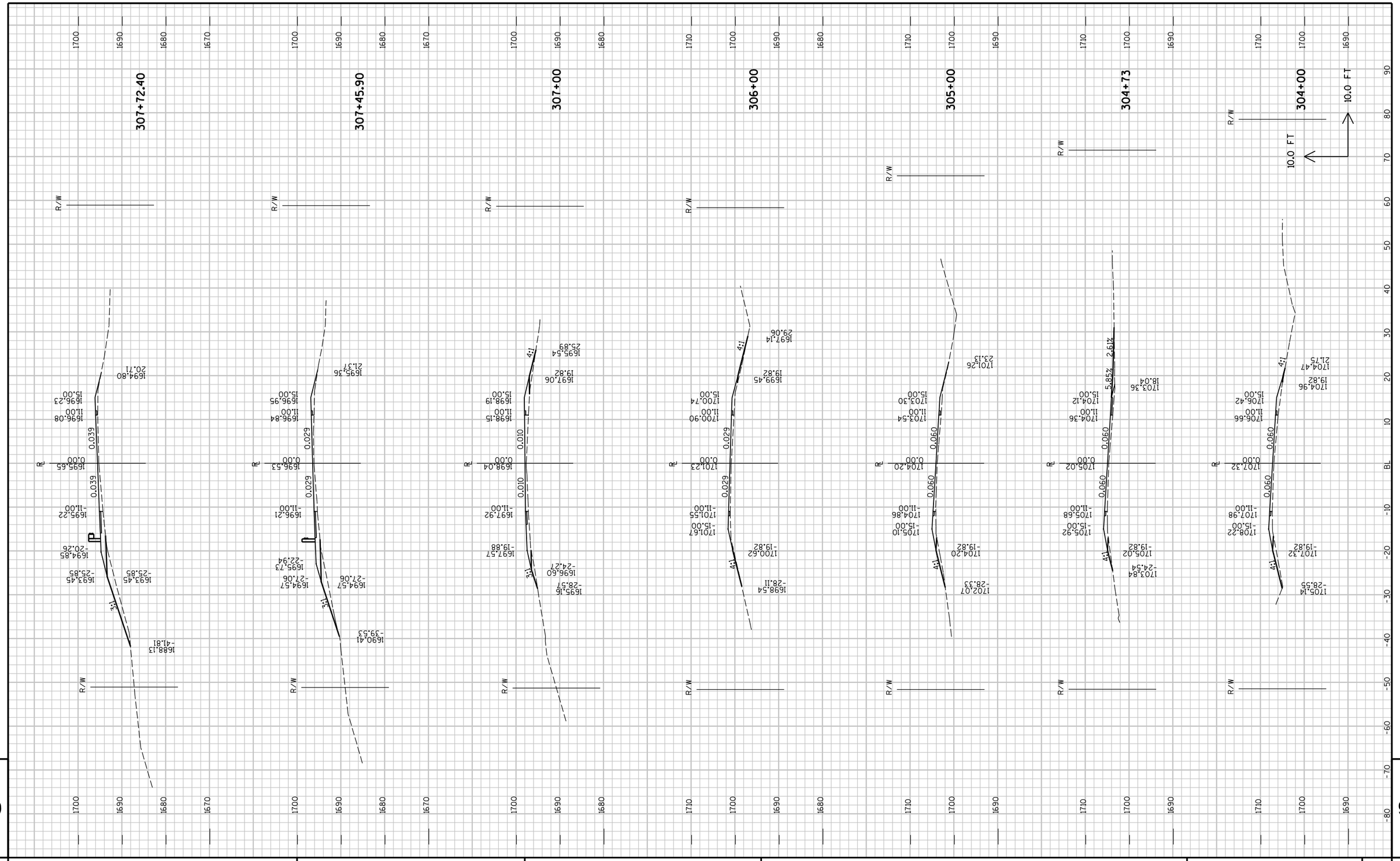

PROJECT NO : 8900-06-76	HWY : C.T.H. D	COUNTY : TAYLOR	CROSS SECTIONS - C.T.H. D	SHEET NO: 185 E

FILE NAME : P:\PT\T\Tayhd\108326\CAD\XBTAYD01.dgn PLOT TIME : 10:52:05 AM PLOT DATE : 1/30/2013 PLOT BY : SEH PLOT NAME : PLOT SCALE : N/A

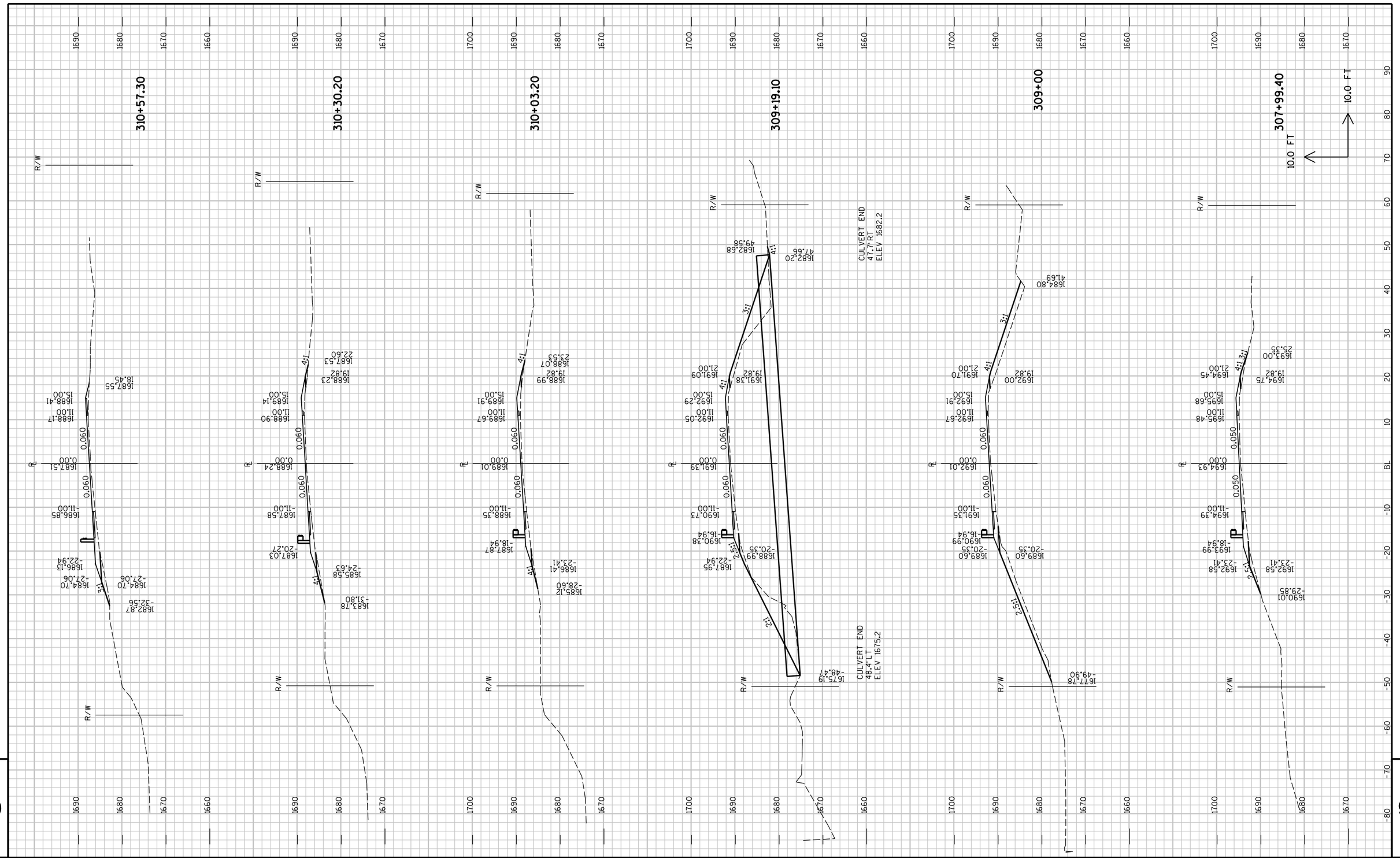

PROJECT NO : 8900-06-76	HWY : C.T.H. D	COUNTY : TAYLOR	CROSS SECTIONS - C.T.H. D	SHEET NO: 186	E

FILE NAME : P:\PT\T\Tayhd\108326\CAD\XBTAYD01.dgn PLOT TIME : 10:52:06 AM PLOT DATE : 1/30/2013 PLOT BY : SEH PLOT NAME : PLOT SCALE : N/A

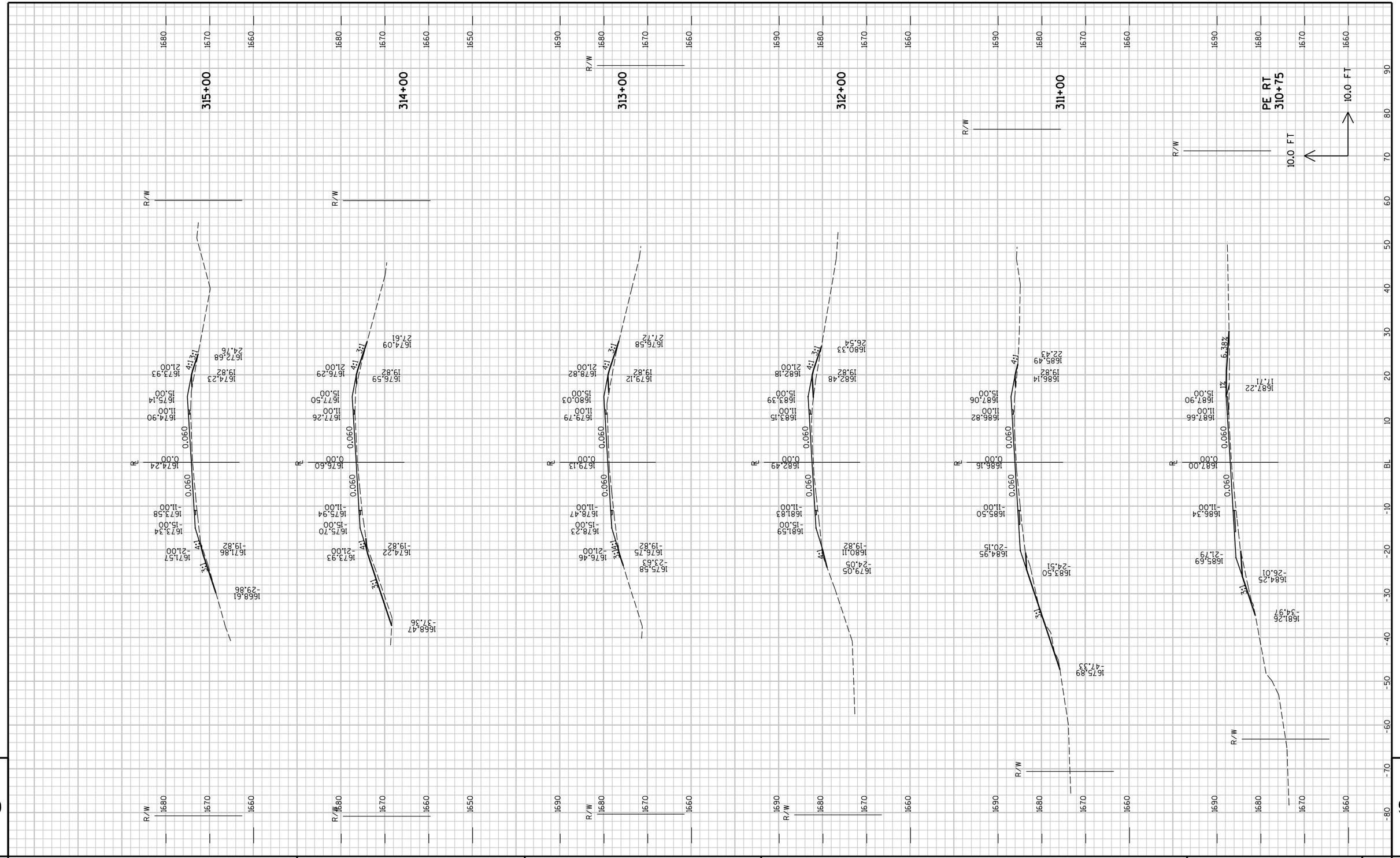
PE RT
310+75
311+00
312+00
313+00
314+00
315+00
R/W
10.0 FT
10.0 FT
6.38%
4:1
3:1
0.060
0.00
-11.00
-15.00
-19.82
-21.00
-24.05
-20.15
-24.51
-47.33
-21.79
-26.01
-34.97
1687.22
17.71
1687.66
1687.90
1686.34
1685.69
1684.25
1681.26
1686.14
1685.49
22.43
1686.82
1687.06
1685.50
1684.95
1683.50
1675.89
1682.48
19.82
1683.15
1683.39
1681.59
1681.83
1680.11
1679.05
1680.33
26.54
1679.12
1678.82
1678.47
1676.75
1675.58
23.63
1676.58
27.72
1676.09
27.61
1676.59
1677.26
1677.50
1675.70
1675.94
1674.22
1673.93
1675.59
19.82
1676.29
21.00
1674.09
1674.90
1675.14
1673.58
1673.34
1671.86
1671.57
1674.23
19.82
1673.93
21.00
1672.68
24.76
1674.24
0.00
1676.60
1679.13
1682.49
1688.16
1688.16
1688.16

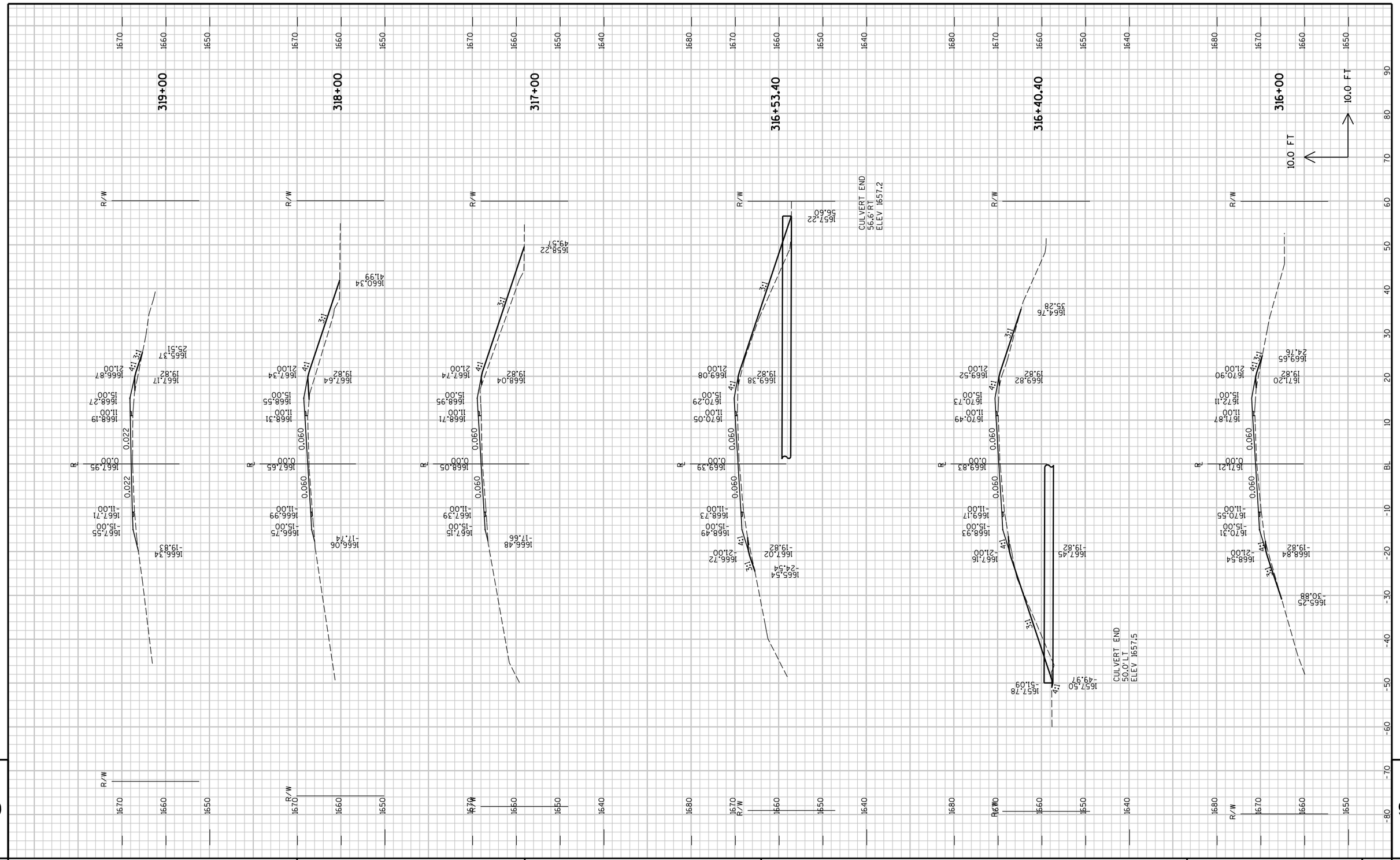

PROJECT NO : 8900-06-76	HWY : C.T.H. D	COUNTY : TAYLOR	CROSS SECTIONS - C.T.H. D	SHEET NO: E

FILE NAME : P:\PT\T\Tayhd\108326\CAD\XBTAYD01.dgn PLOT TIME : 10:52:06 AM PLOT DATE : 1/30/2013 PLOT BY : SEH PLOT NAME : PLOT SCALE : N/A

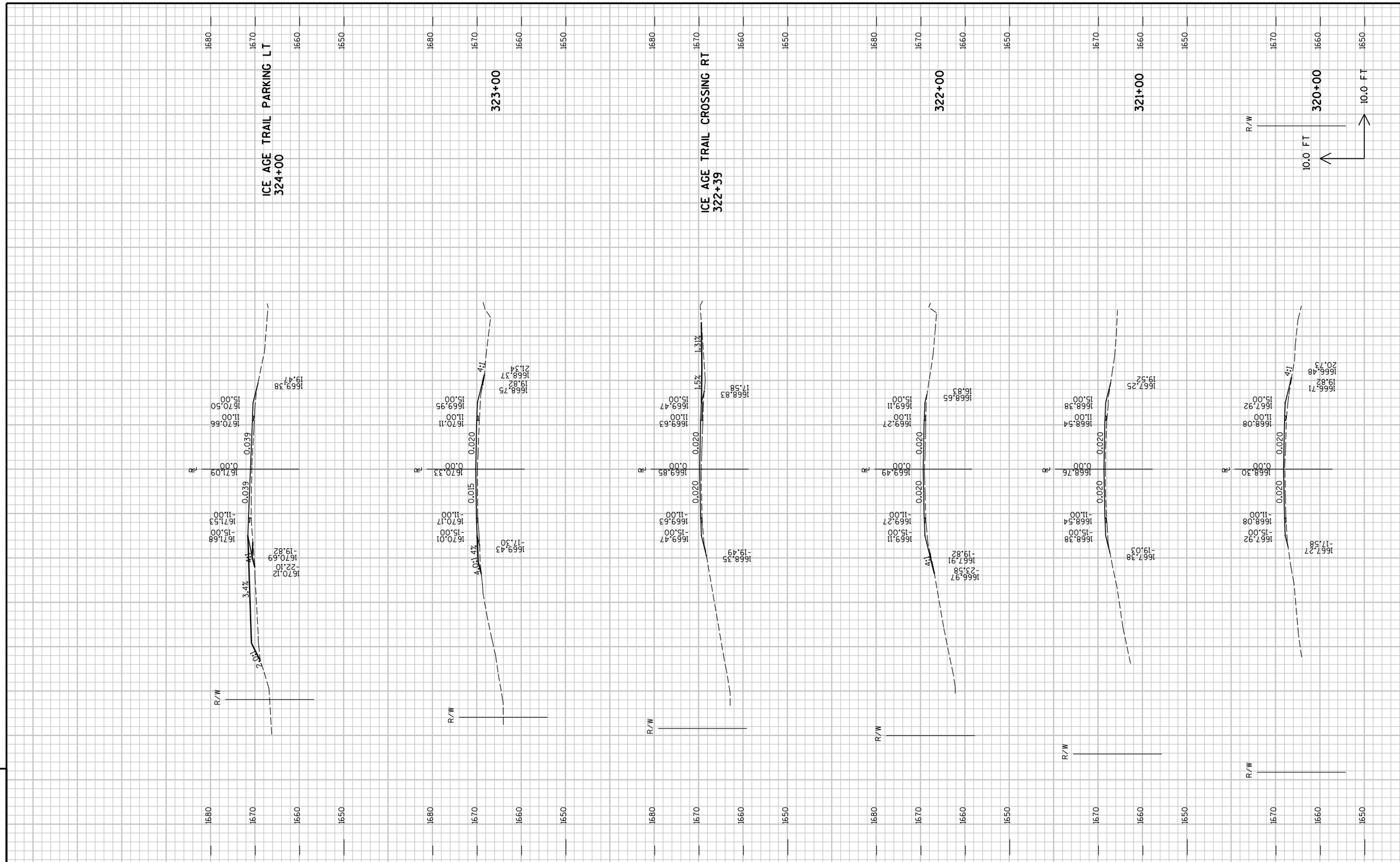

9

9

PROJECT NO : 8900-06-76	HWY : C.T.H. D	COUNTY : TAYLOR	CROSS SECTIONS - C.T.H. D	SHEET NO: 189	E

FILE NAME : P:\PT\T\Tayhd\108326\CAD\XBTAYD01.dgn PLOT TIME : 10:52:06 AM PLOT DATE : 1/30/2013 PLOT BY : SEH PLOT NAME : PLOT SCALE : N/A

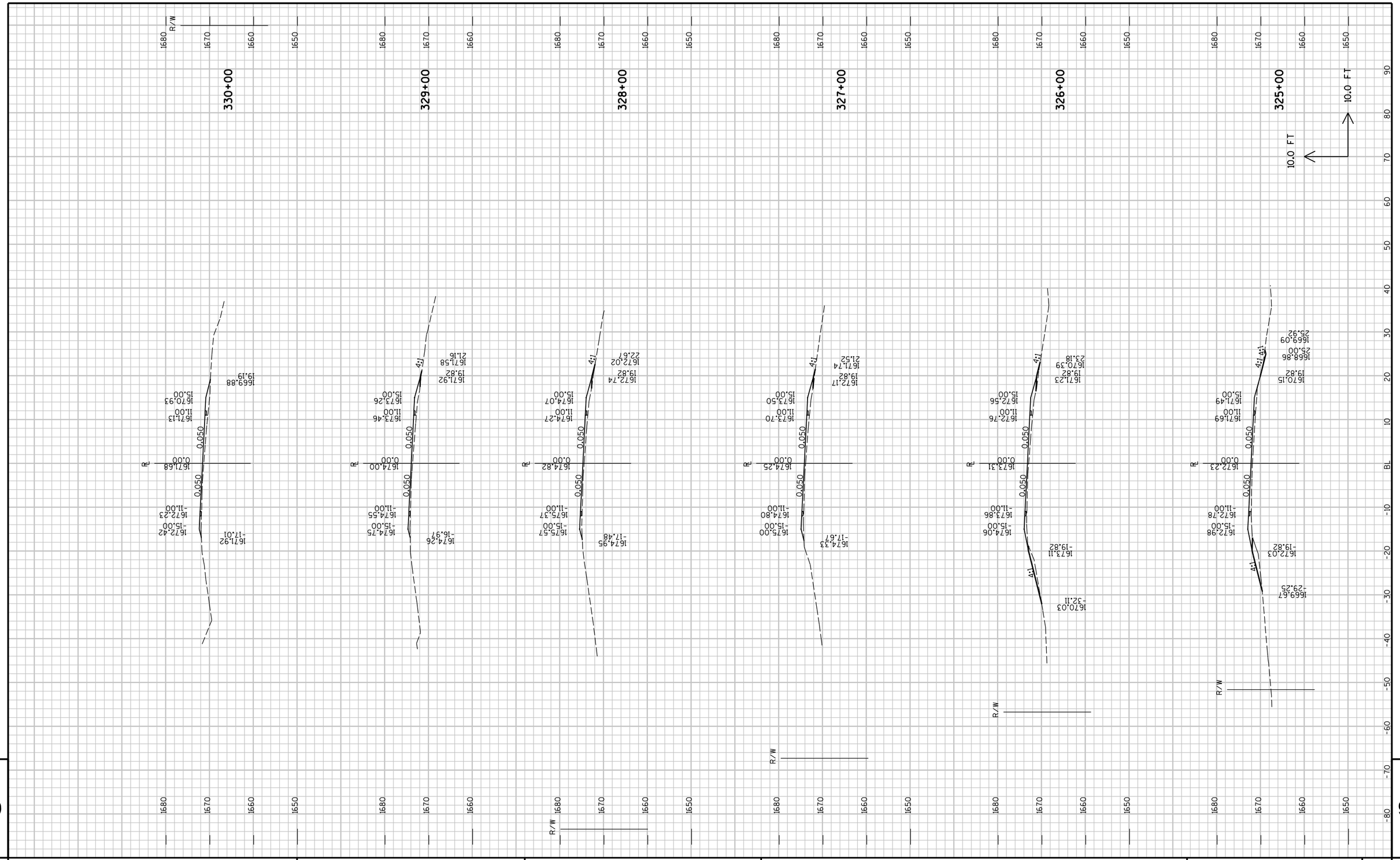

PROJECT NO : 8900-06-76	HWY : C.T.H. D	COUNTY : TAYLOR	CROSS SECTIONS - C.T.H. D	SHEET NO: 190	E

FILE NAME : P:\PT\T\Tayhd\108326\CAD\XBTAYD01.dgn PLOT TIME : 10:52:06 AM PLOT DATE : 1/30/2013 PLOT BY : SEH PLOT NAME : PLOT SCALE : N/A

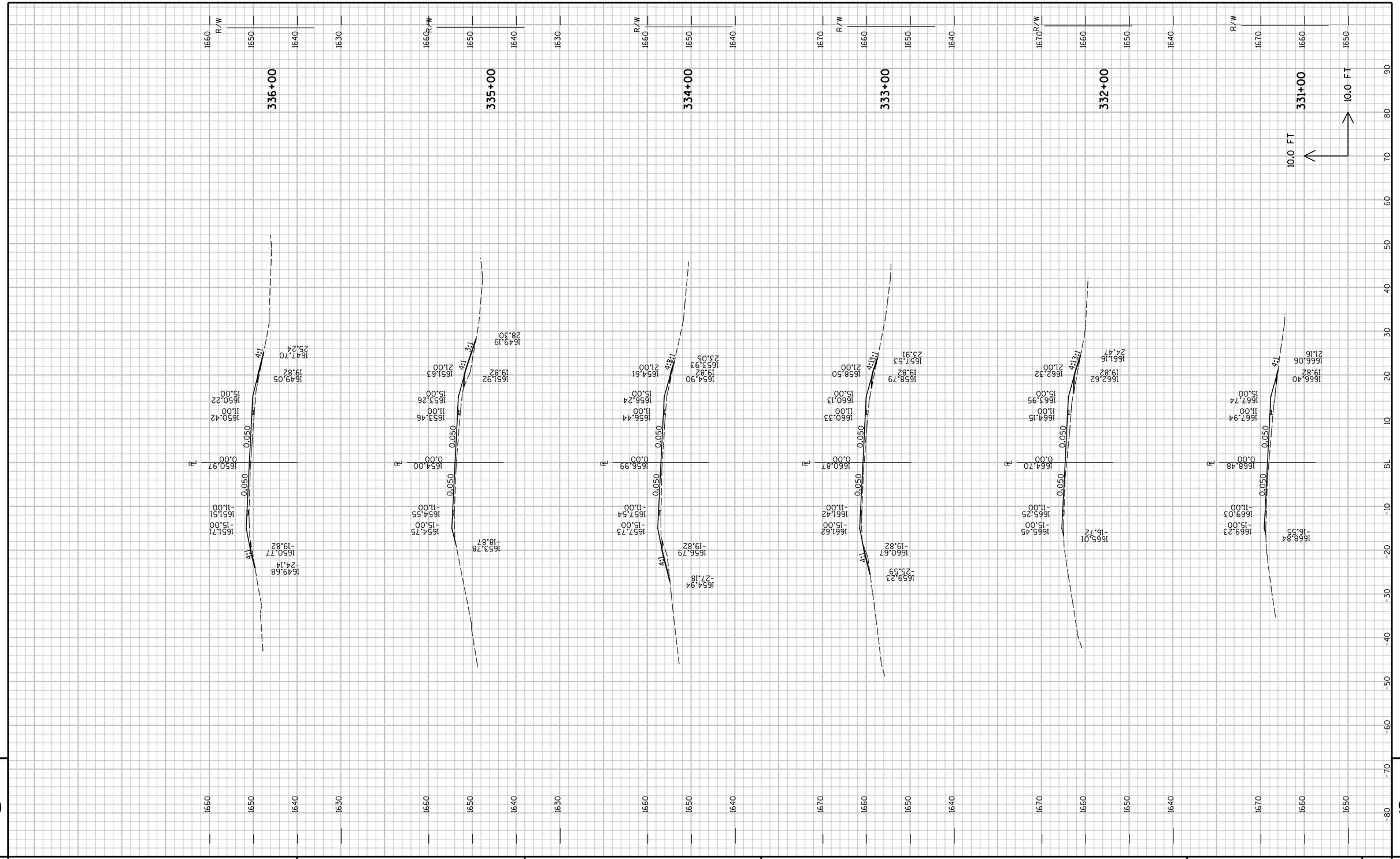

PROJECT NO : 8900-06-76	HWY : C.T.H. D	COUNTY : TAYLOR	CROSS SECTIONS - C.T.H. D	SHEET NO: 191 E

FILE NAME : P:\PT\T\Tayhd\108326\CAD\XBTAYD01.dgn PLOT TIME : 10:52:07 AM PLOT DATE : 1/30/2013 PLOT BY : SEH PLOT NAME : PLOT SCALE : N/A

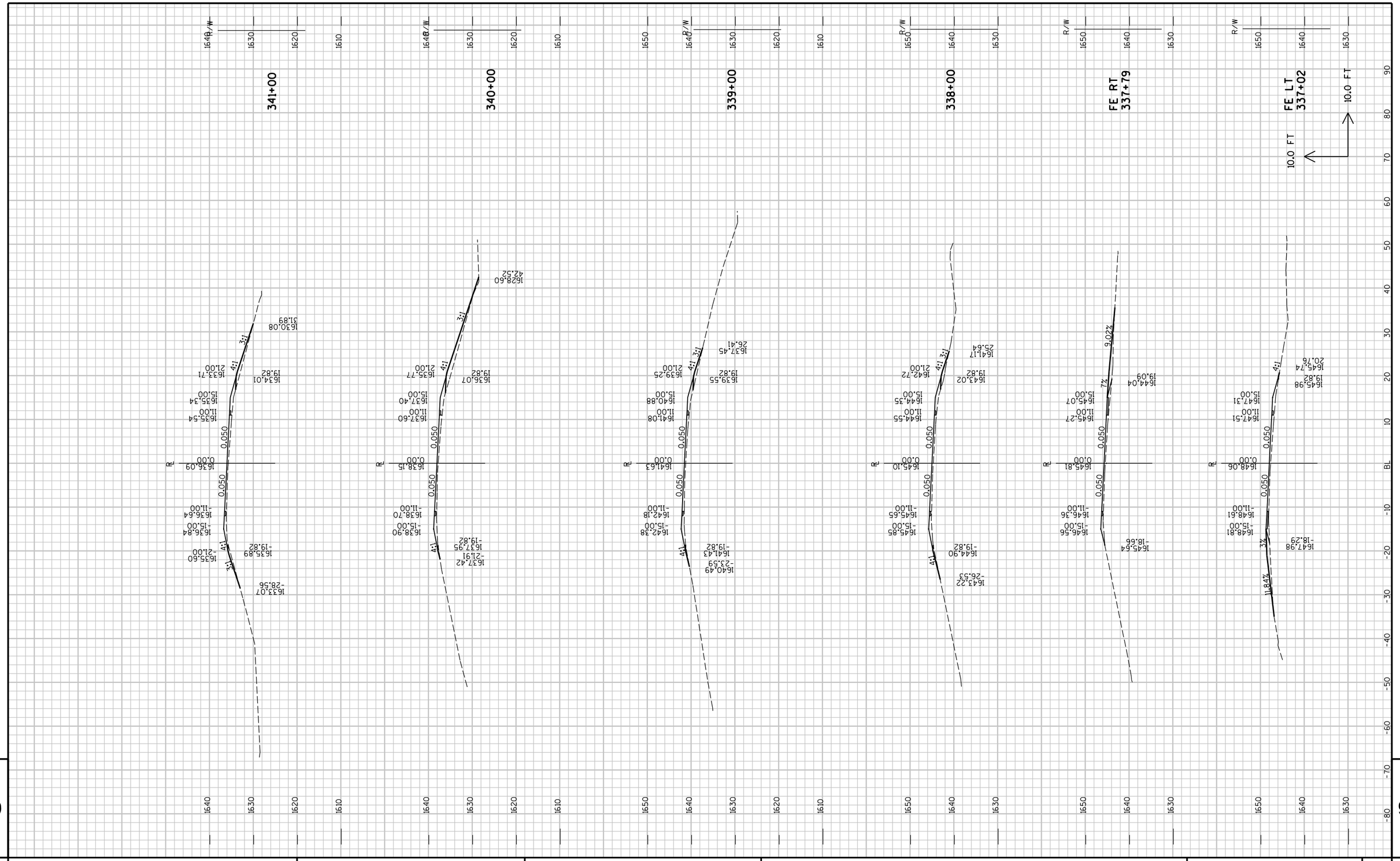

PROJECT NO : 8900-06-76	HWY : C.T.H. D	COUNTY : TAYLOR	CROSS SECTIONS - C.T.H. D	SHEET NO: 192 E

FILE NAME : P:\PT\T\Tayhd\108326\CAD\XBTAYD01.dgn PLOT TIME : 10:52:07 AM PLOT DATE : 1/30/2013 PLOT BY : SEH PLOT NAME : PLOT SCALE : N/A

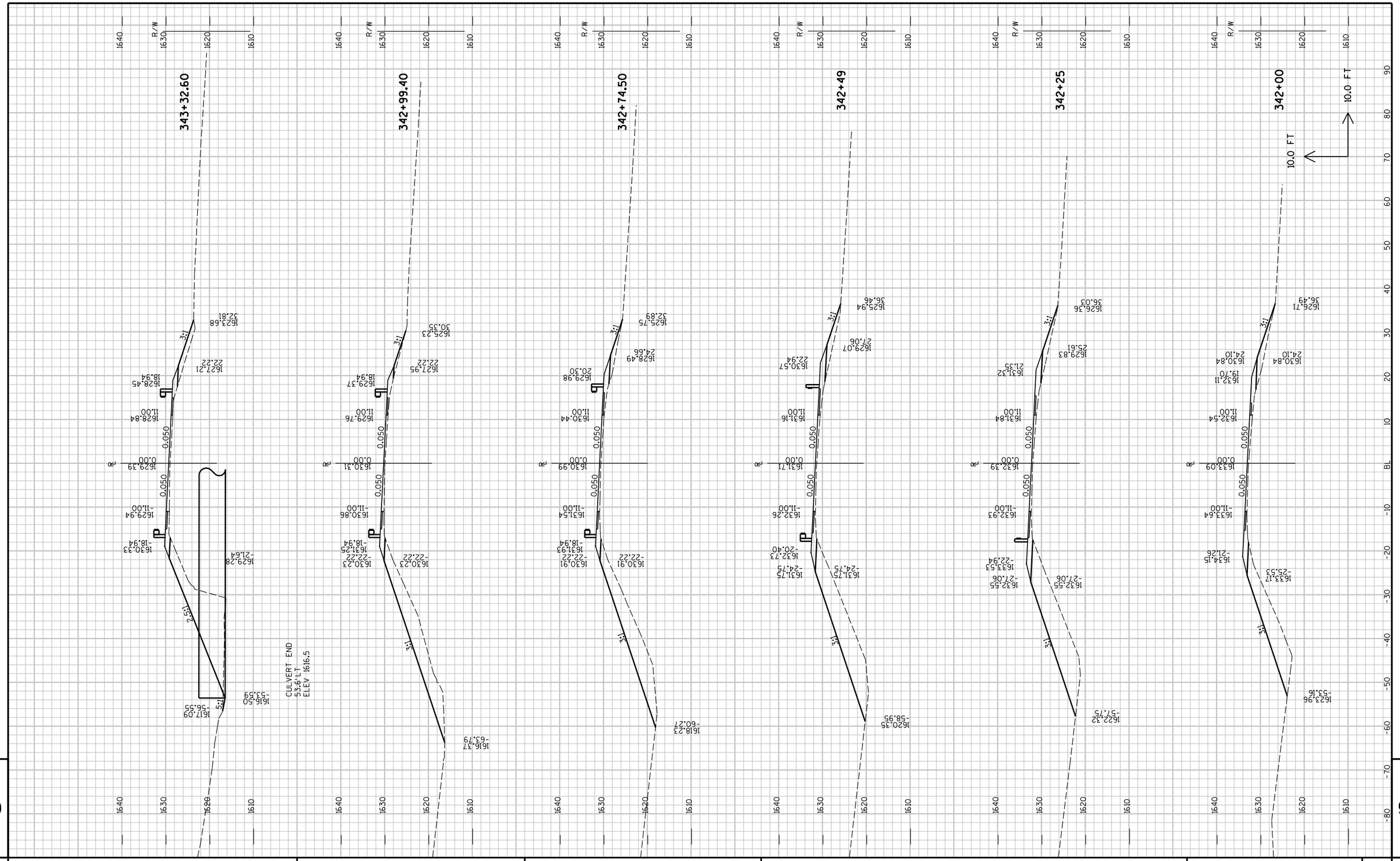

9

PROJECT NO : 8900-06-76	HWY : C.T.H. D	COUNTY : TAYLOR	CROSS SECTIONS - C.T.H. D	SHEET NO: 193	E

9

FILE NAME : P:\PT\T\Tayhd\108326\CAD\XBTAYD01.dgn PLOT TIME : 10:52:07 AM PLOT DATE : 1/30/2013 PLOT BY : SEH PLOT NAME : PLOT SCALE : N/A

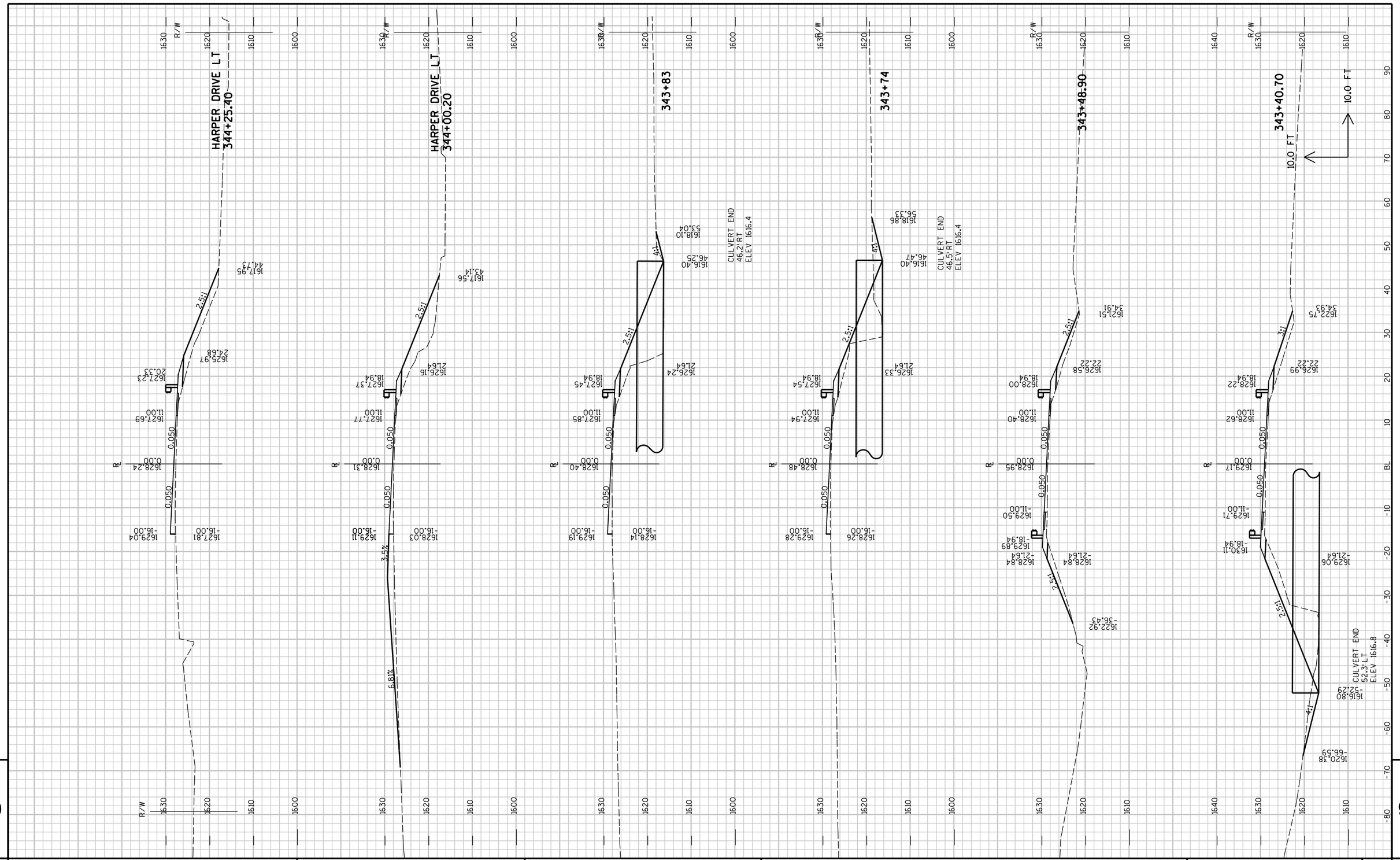

PROJECT NO : 8900-06-76	HWY : C.T.H. D	COUNTY : TAYLOR	CROSS SECTIONS - C.T.H. D	SHEET NO: 194 E

FILE NAME : P:\PT\T\Tayhd\108326\CAD\XBTAYD01.dgn PLOT TIME : 10:52:07 AM PLOT DATE : 1/30/2013 PLOT BY : SEH PLOT NAME : PLOT SCALE : N/A

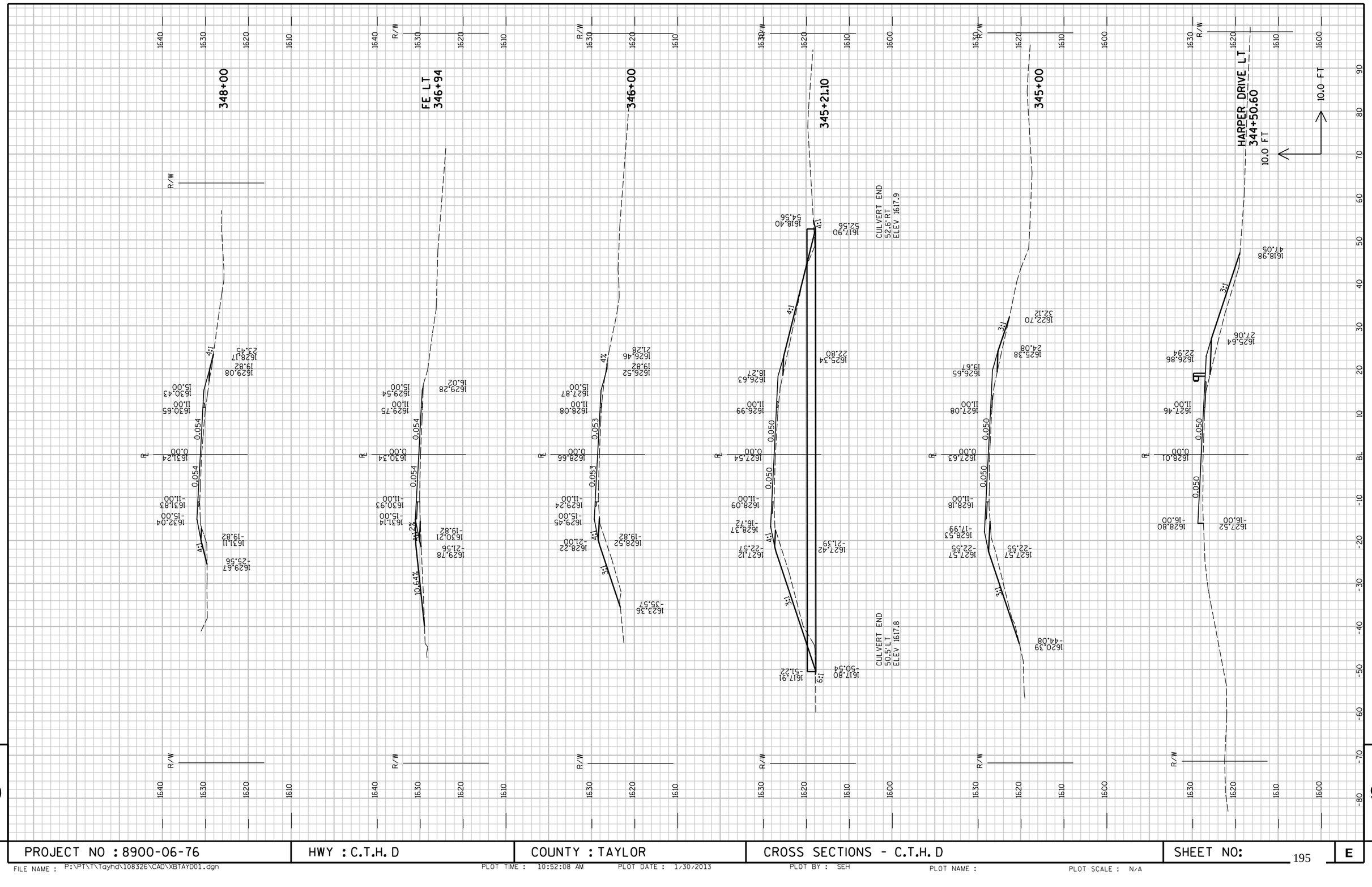

PROJECT NO : 8900-06-76	HWY : C.T.H. D	COUNTY : TAYLOR	CROSS SECTIONS - C.T.H. D	SHEET NO:	E

FILE NAME : P:\PT\T\Tayhd\108326\CAD\XBTAYD01.dgn PLOT TIME : 10:52:08 AM PLOT DATE : 1/30/2013 PLOT BY : SEH PLOT NAME : PLOT SCALE : N/A

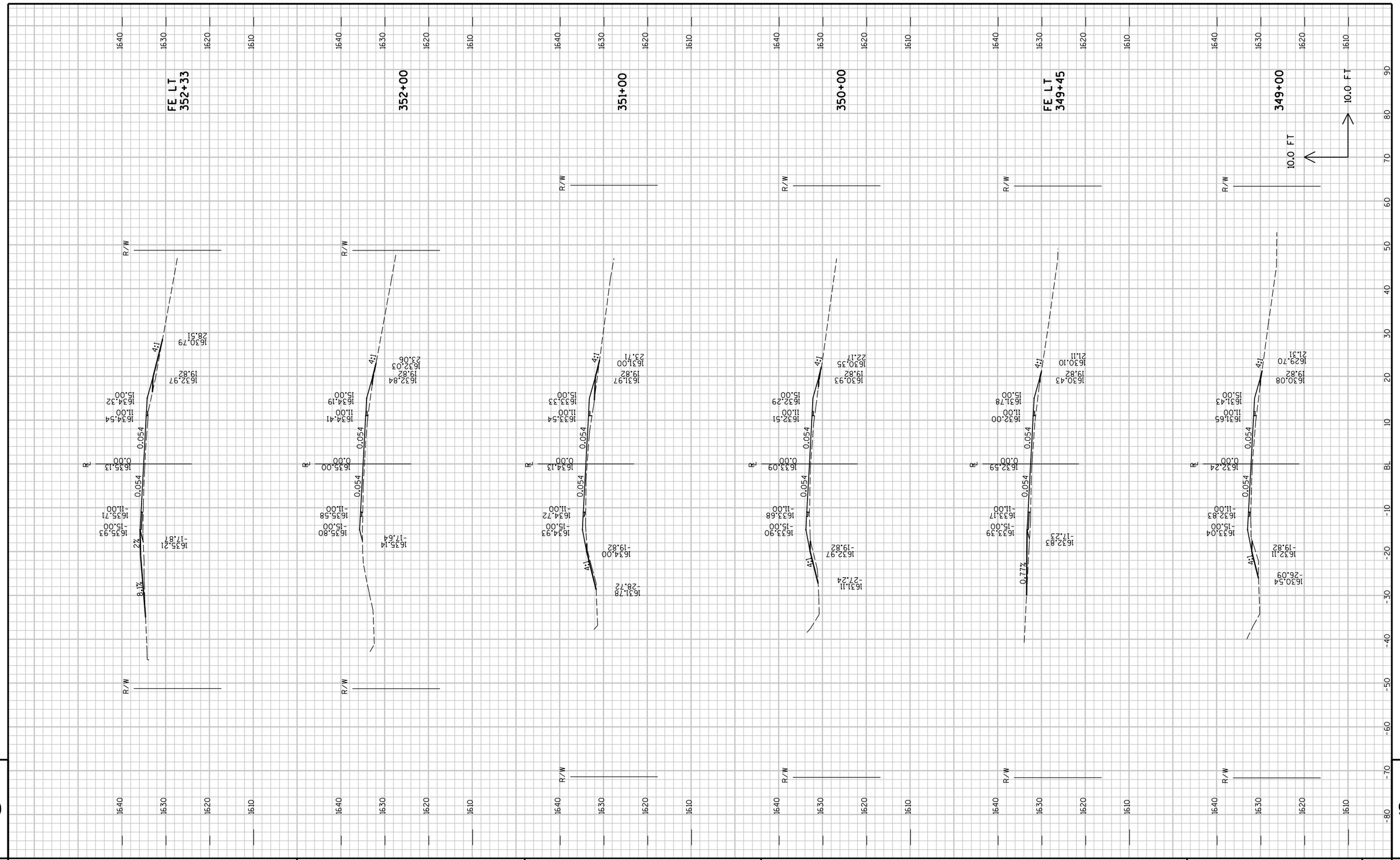

PROJECT NO : 8900-06-76	HWY : C.T.H. D	COUNTY : TAYLOR	CROSS SECTIONS - C.T.H. D	SHEET NO: 196 E

FILE NAME : P:\PT\T\Tayhd\108326\CAD\XBTAYD01.dgn PLOT TIME : 10:52:08 AM PLOT DATE : 1/30/2013 PLOT BY : SEH PLOT NAME : PLOT SCALE : N/A

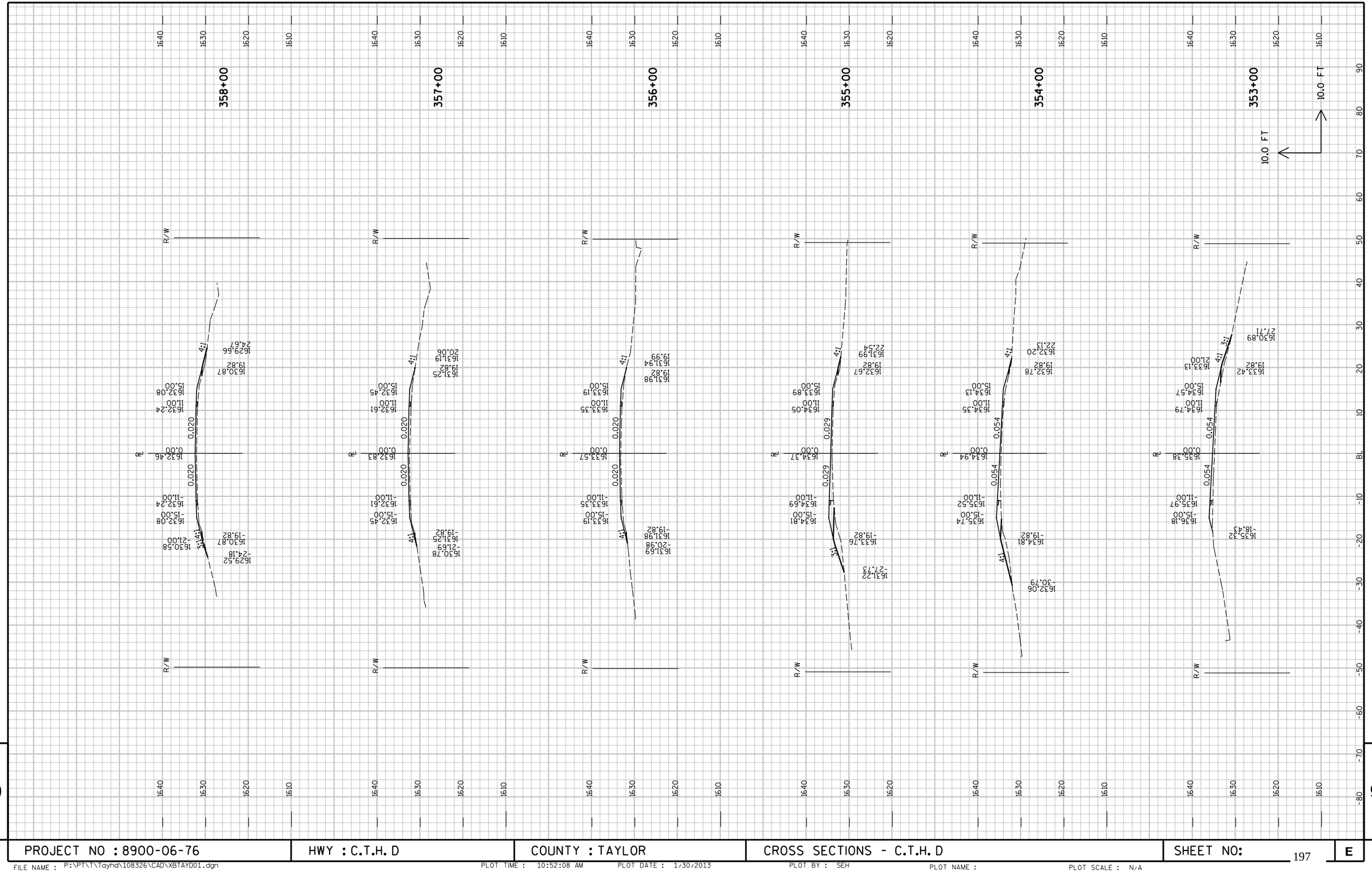
358+00
357+00
356+00
355+00
354+00
353+00
10.0 FT
10.0 FT
R/W
R/W
R/W
R/W
R/W
R/W
0.020
0.020
0.020
0.029
0.054
0.054
4:1
4:1
4:1
4:1
7:1
3:1
0.00
-11.00
-15.00
-19.82
-21.00
-24.18
-27.73
-20.98
-21.69
-30.79
-18.43
11.00
15.00
19.82
21.00
22.13
24.67
27.71
1630.87
1629.66
1631.25
1630.78
1631.94
1631.98
1633.19
1632.45
1633.35
1632.61
1631.99
1632.67
1633.89
1634.05
1634.81
1634.69
1633.76
1632.06
1634.94
1634.13
1635.74
1635.52
1633.42
1634.79
1634.57
1635.97
1636.18
1635.32
1635.38
1632.46
1632.24
1632.08
1632.83
1632.61
1632.45
1633.57
1633.35
1633.19
1631.94
1631.98
1631.99
1632.67
1632.20
1633.13
1634.57
1634.37
1634.00
1633.76
1634.81

PATRICK DRIVE RT
361+07.85

360+00

PE RT
359+84

359+69.90

359+61

359+00

10.0 FT

10.0 FT

PROJECT NO : 8900-06-76	HWY : C.T.H. D	COUNTY : TAYLOR	CROSS SECTIONS - C.T.H. D	SHEET NO:	E

FILE NAME : P:\PT\T\Tayhd\108326\CAD\XBTAYD01.dgn PLOT TIME : 10:52:08 AM PLOT DATE : 1/30/2013 PLOT BY : SEH PLOT NAME : PLOT SCALE : N/A

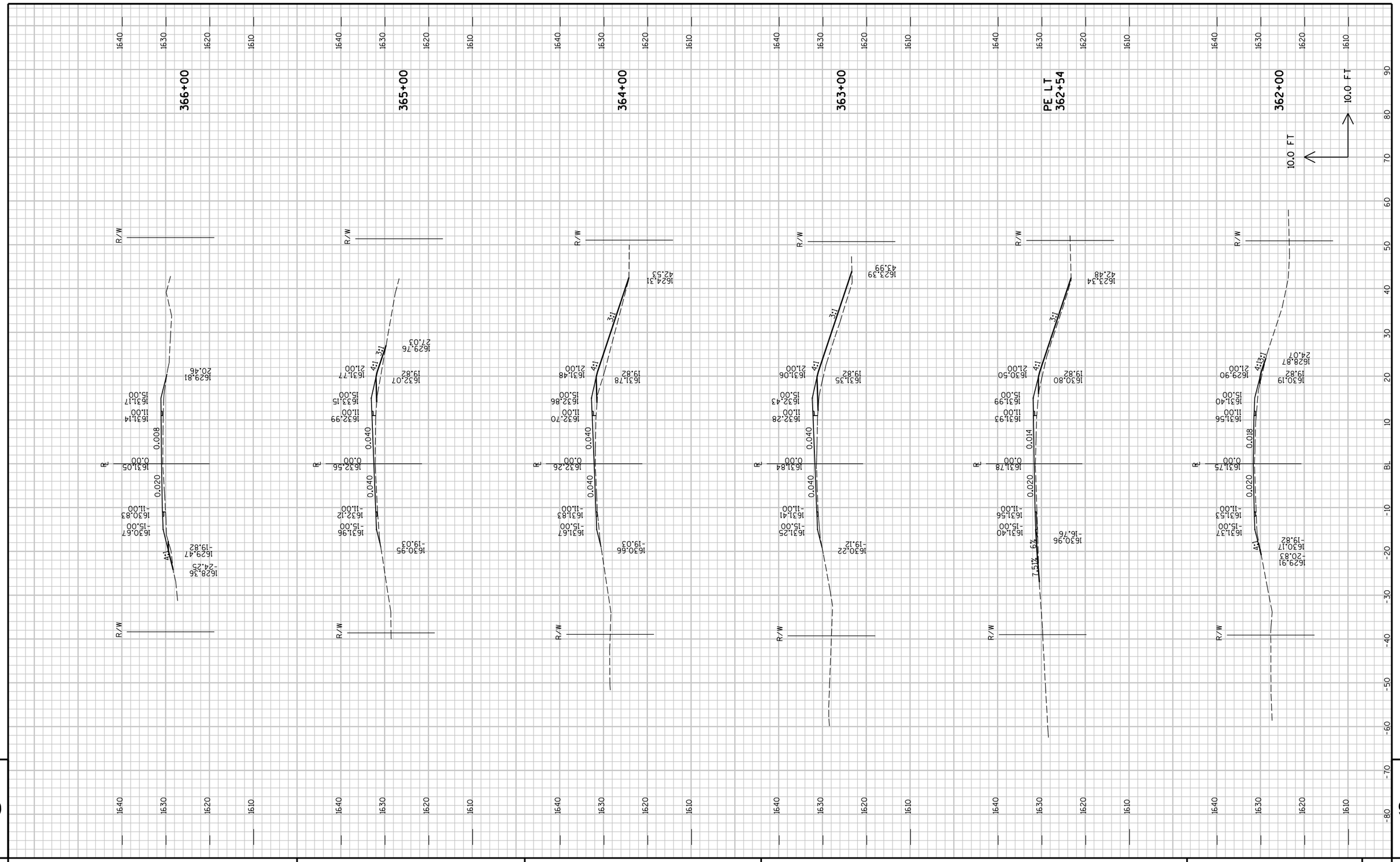

PROJECT NO : 8900-06-76	HWY : C.T.H. D	COUNTY : TAYLOR	CROSS SECTIONS - C.T.H. D	SHEET NO: 199 E

FILE NAME : P:\PT\T\Tayhd\108326\CAD\XBTAYD01.dgn PLOT TIME : 10:52:08 AM PLOT DATE : 1/30/2013 PLOT BY : SEH PLOT NAME : PLOT SCALE : N/A

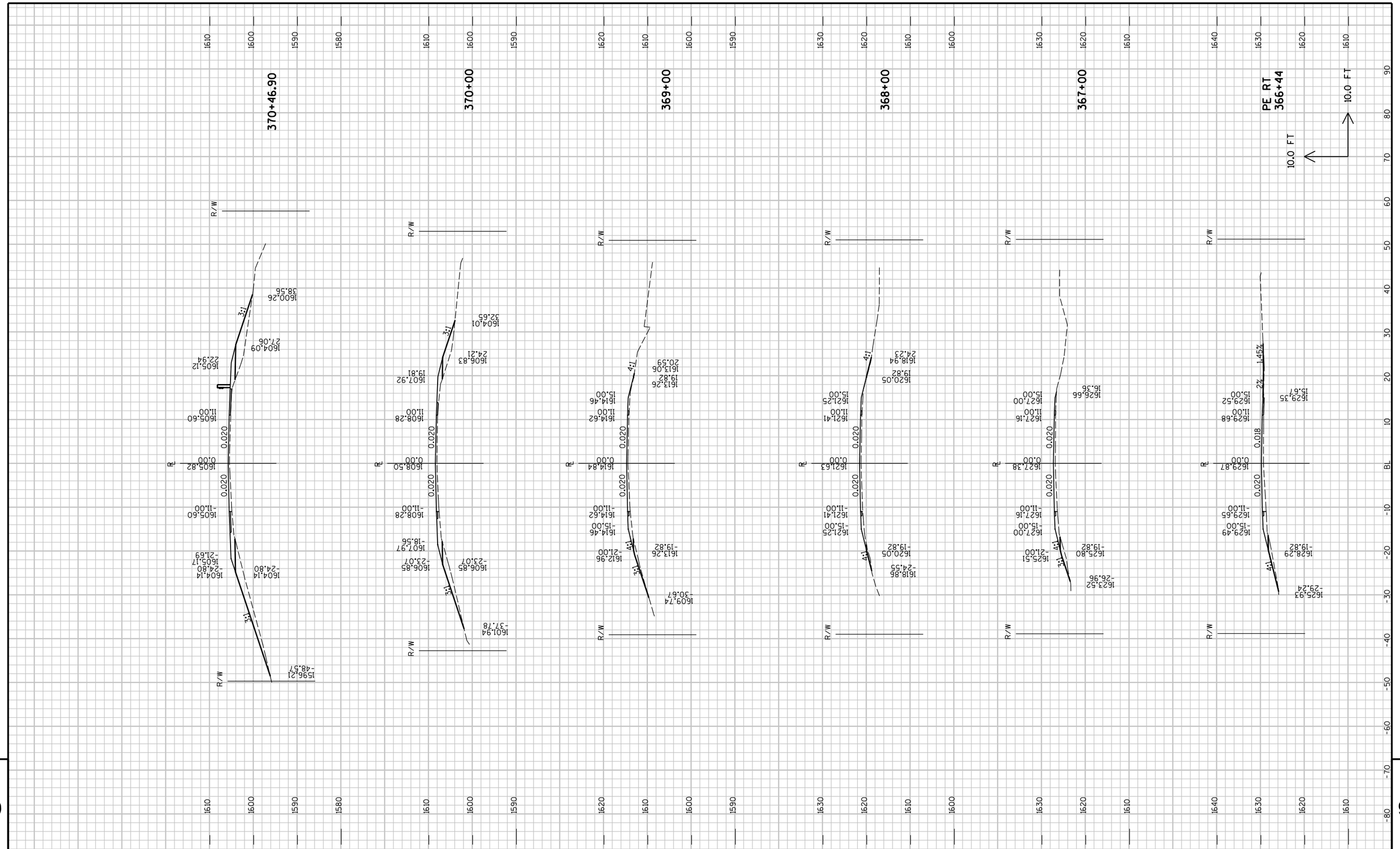

PROJECT NO : 8900-06-76	HWY : C.T.H. D	COUNTY : TAYLOR	CROSS SECTIONS - C.T.H. D	SHEET NO: 200	E

FILE NAME : P:\PT\T\Tayhd\108326\CAD\XBTAYD01.dgn PLOT TIME : 10:52:09 AM PLOT DATE : 1/30/2013 PLOT BY : SEH PLOT NAME : PLOT SCALE : N/A

9

PROJECT NO : 8900-06-76	HWY : C.T.H. D	COUNTY : TAYLOR	CROSS SECTIONS - C.T.H. D	SHEET NO:	E

9

FILE NAME : P:\PT\T\Tayhd\108326\CAD\XBTAYD01.dgn PLOT TIME : 10:52:09 AM PLOT DATE : 1/30/2013 PLOT BY : SEH PLOT NAME : PLOT SCALE : N/A

PROJECT NO : 8900-06-76	HWY : C.T.H. D	COUNTY : TAYLOR	CROSS SECTIONS - C.T.H. D	SHEET NO: 202	E

FILE NAME : P:\PT\T\Tayhd\108326\CAD\XBTAYD01.dgn PLOT TIME : 10:52:09 AM PLOT DATE : 1/30/2013 PLOT BY : SEH PLOT NAME : PLOT SCALE : N/A

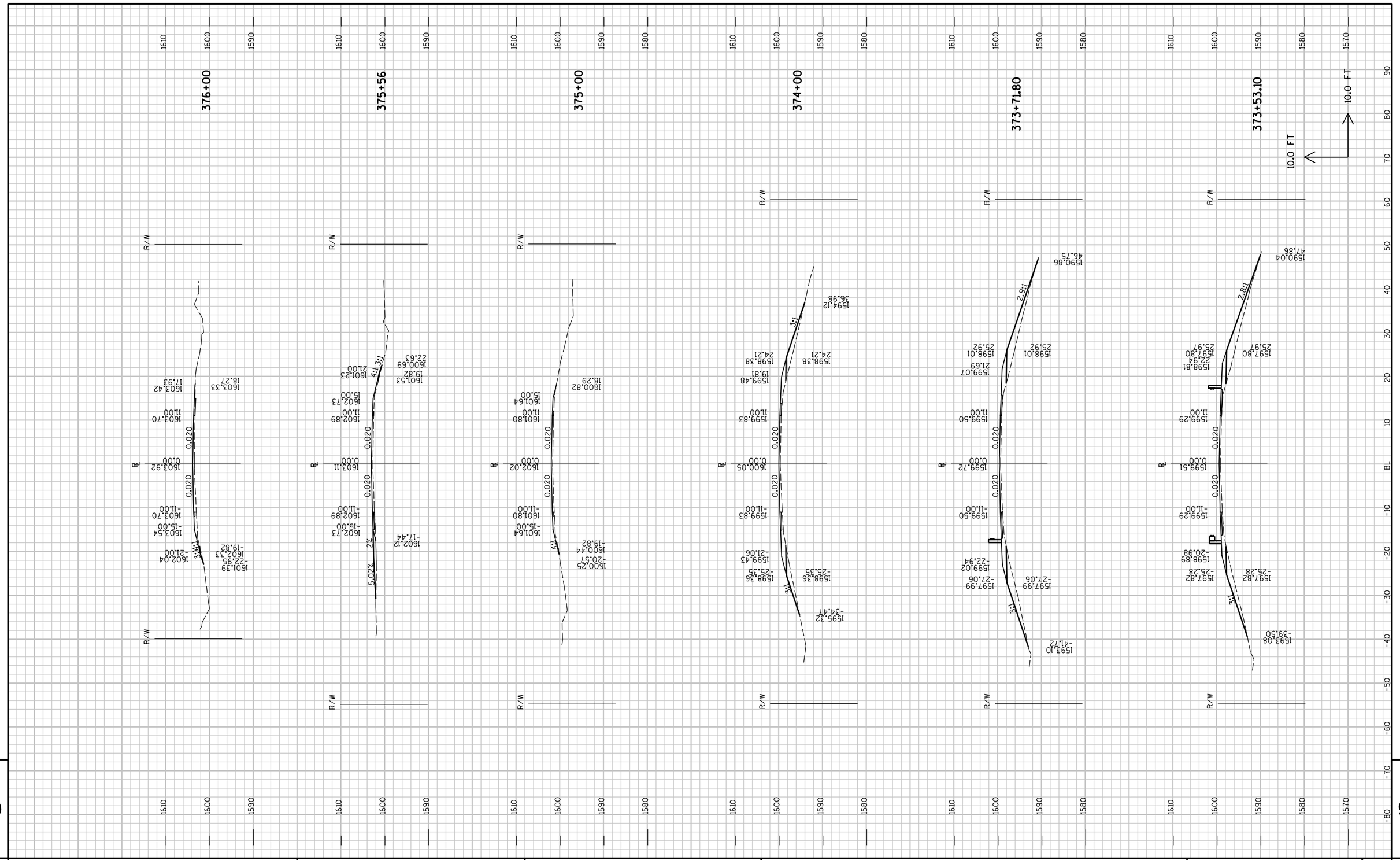

PROJECT NO : 8900-06-76	HWY : C.T.H. D	COUNTY : TAYLOR	CROSS SECTIONS - C.T.H. D	SHEET NO: 203 E

FILE NAME : P:\PT\T\Tayhd\108326\CAD\XBTAYD01.dgn PLOT TIME : 10:52:09 AM PLOT DATE : 1/30/2013 PLOT BY : SEH PLOT NAME : PLOT SCALE : N/A

9

9

PROJECT NO : 8900-06-76	HWY : C.T.H. D	COUNTY : TAYLOR	CROSS SECTIONS - C.T.H. D	SHEET NO: 204	E

FILE NAME : P:\PT\T\Tayhd\108326\CAD\XBTAYD01.dgn PLOT TIME : 10:52:09 AM PLOT DATE : 1/30/2013 PLOT BY : SEH PLOT NAME : PLOT SCALE : N/A

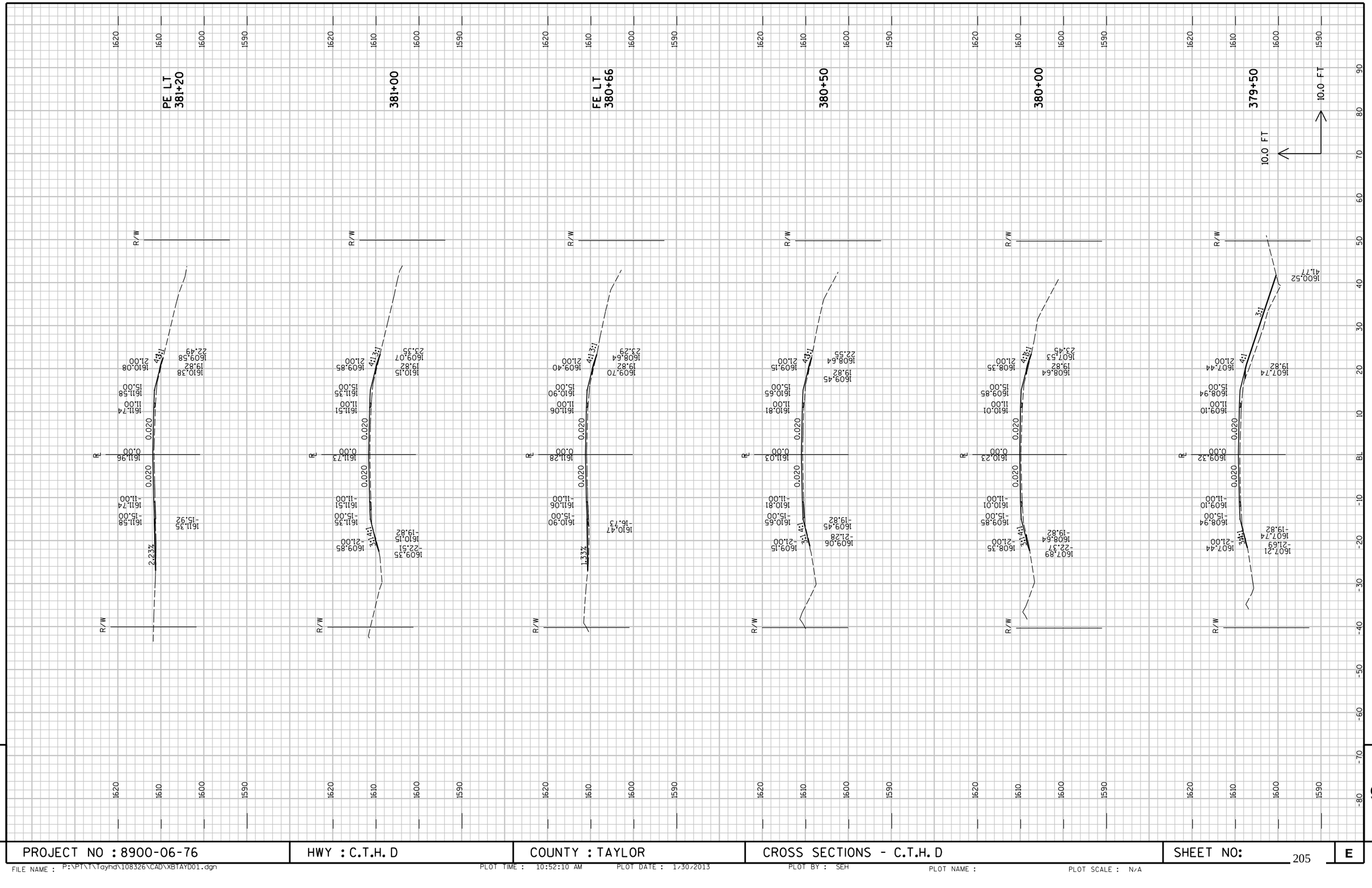

PROJECT NO : 8900-06-76	HWY : C.T.H. D	COUNTY : TAYLOR	CROSS SECTIONS - C.T.H. D	SHEET NO: 205 E

FILE NAME : P:\PT\T\Tayhd\108326\CAD\XBTAYD01.dgn PLOT TIME : 10:52:10 AM PLOT DATE : 1/30/2013 PLOT BY : SEH PLOT NAME : PLOT SCALE : N/A

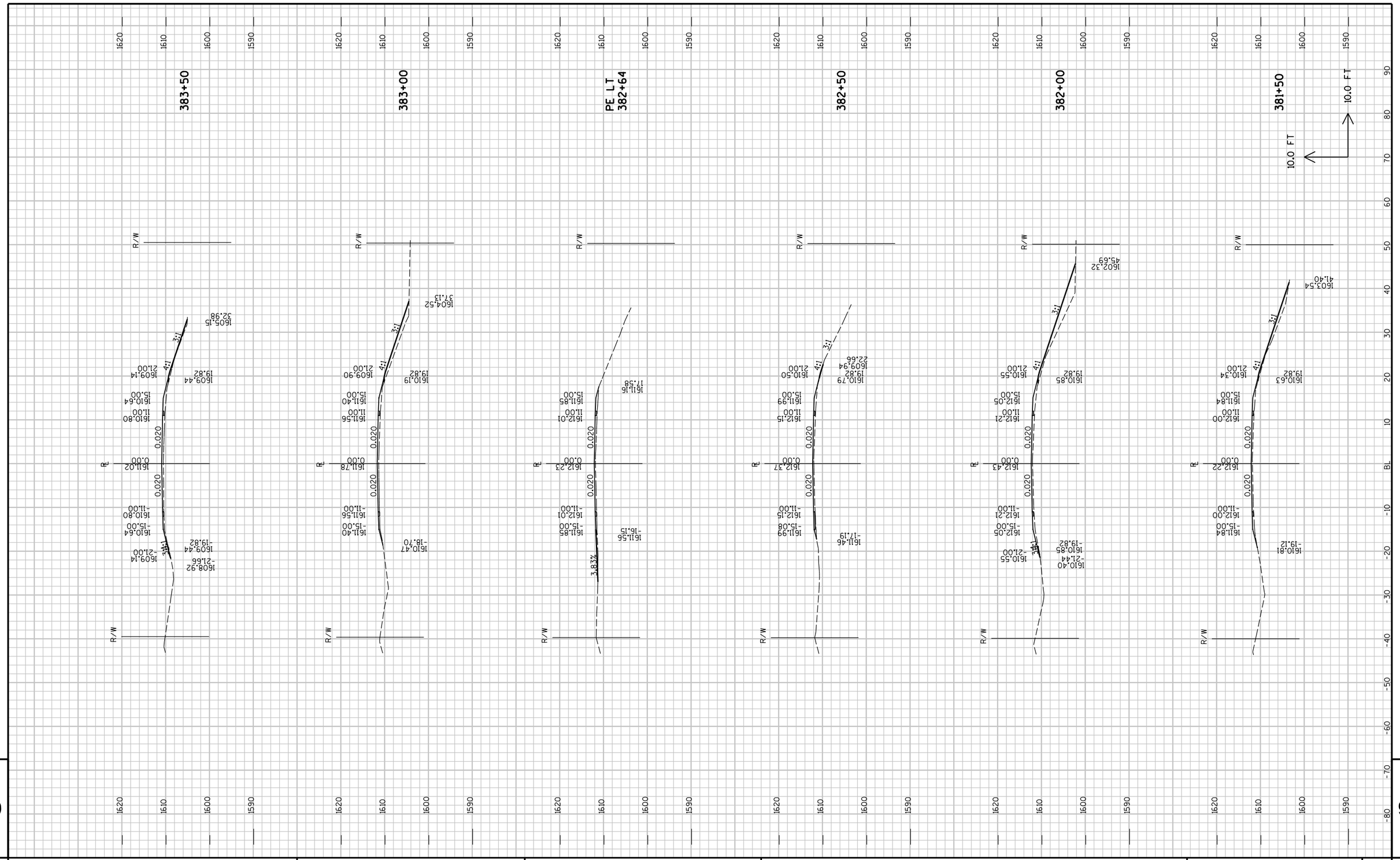

9

9

PROJECT NO : 8900-06-76	HWY : C.T.H. D	COUNTY : TAYLOR	CROSS SECTIONS - C.T.H. D	SHEET NO: 206	E

FILE NAME : P:\PT\T\Tayhd\108326\CAD\XBTAYD01.dgn PLOT TIME : 10:52:10 AM PLOT DATE : 1/30/2013 PLOT BY : SEH PLOT NAME : PLOT SCALE : N/A

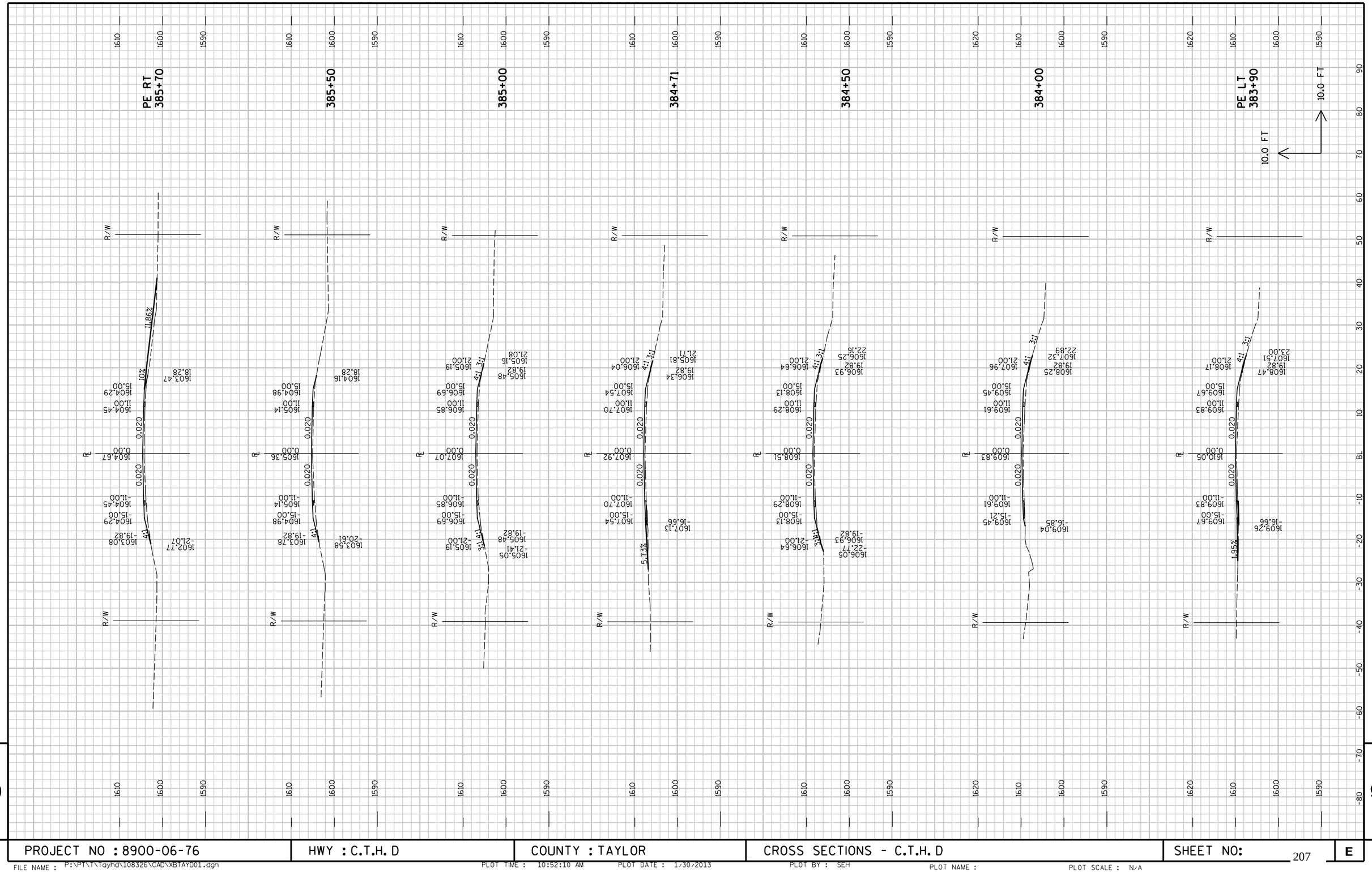

PROJECT NO : 8900-06-76	HWY : C.T.H. D	COUNTY : TAYLOR	CROSS SECTIONS - C.T.H. D	SHEET NO: 207	E

FILE NAME : P:\PT\T\Tayhd\108326\CAD\XBTAYD01.dgn PLOT TIME : 10:52:10 AM PLOT DATE : 1/30/2013 PLOT BY : SEH PLOT NAME : PLOT SCALE : N/A

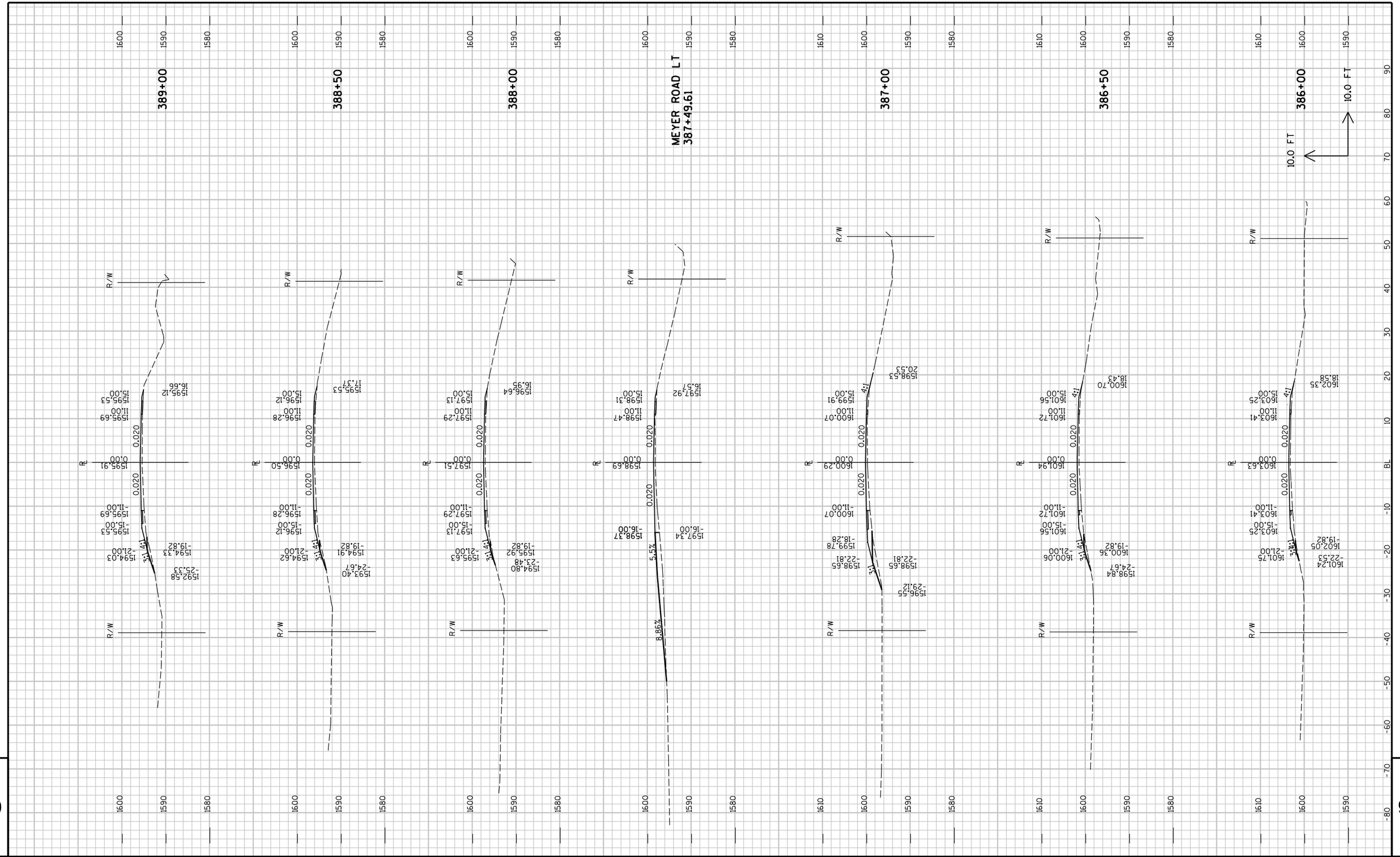

PROJECT NO : 8900-06-76	HWY : C.T.H. D	COUNTY : TAYLOR	CROSS SECTIONS - C.T.H. D	SHEET NO: 208	E

FILE NAME : P:\PT\T\Tayhd\108326\CAD\XBTAYD01.dgn PLOT TIME : 10:52:10 AM PLOT DATE : 1/30/2013 PLOT BY : SEH PLOT NAME : PLOT SCALE : N/A

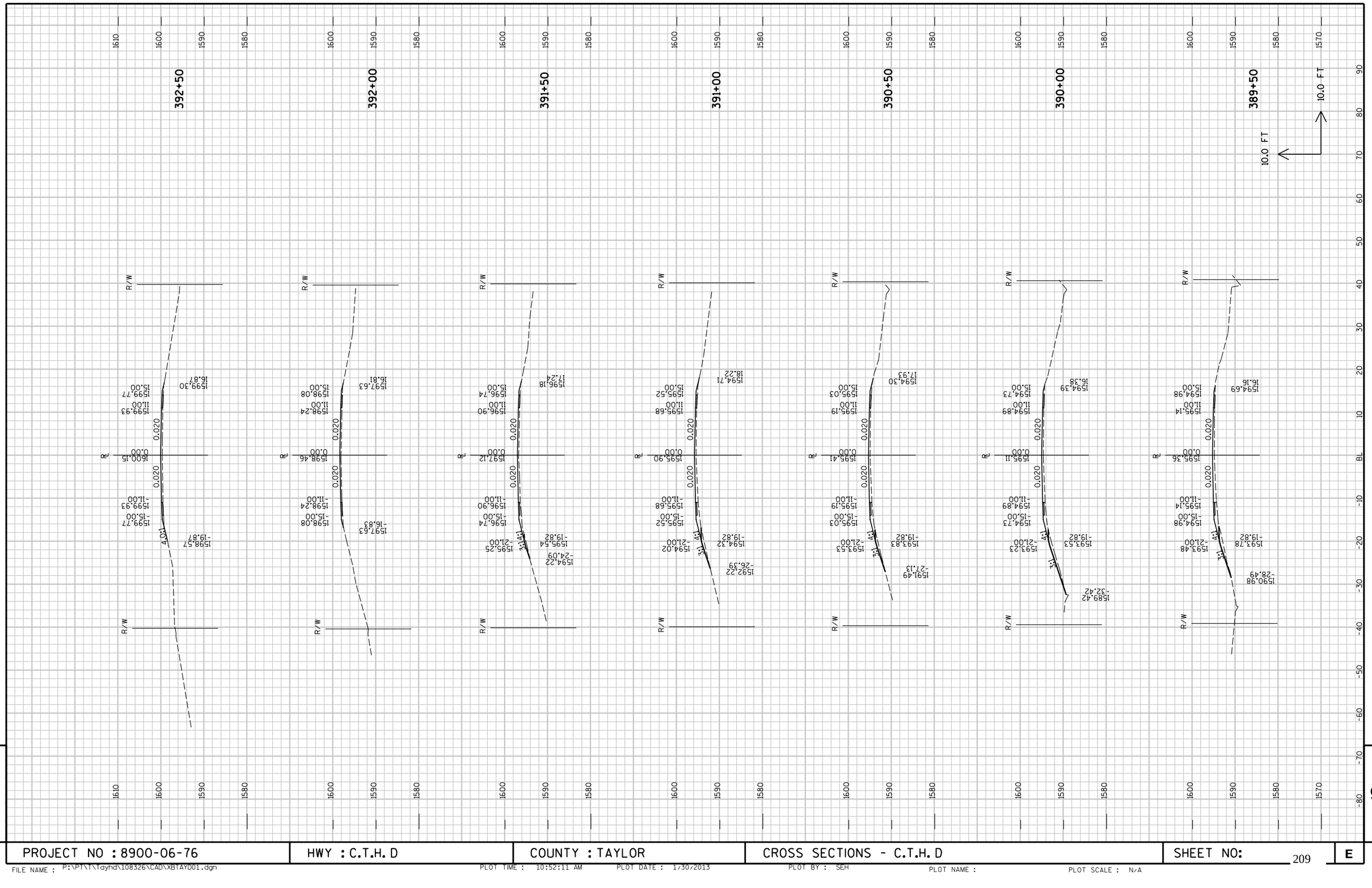

9

9

PROJECT NO : 8900-06-76	HWY : C.T.H. D	COUNTY : TAYLOR	CROSS SECTIONS - C.T.H. D	SHEET NO:	E

FILE NAME : P:\PT\T\Tayhd\108326\CAD\XBTAYD01.dgn PLOT TIME : 10:52:11 AM PLOT DATE : 1/30/2013 PLOT BY : SEH PLOT NAME : PLOT SCALE : N/A

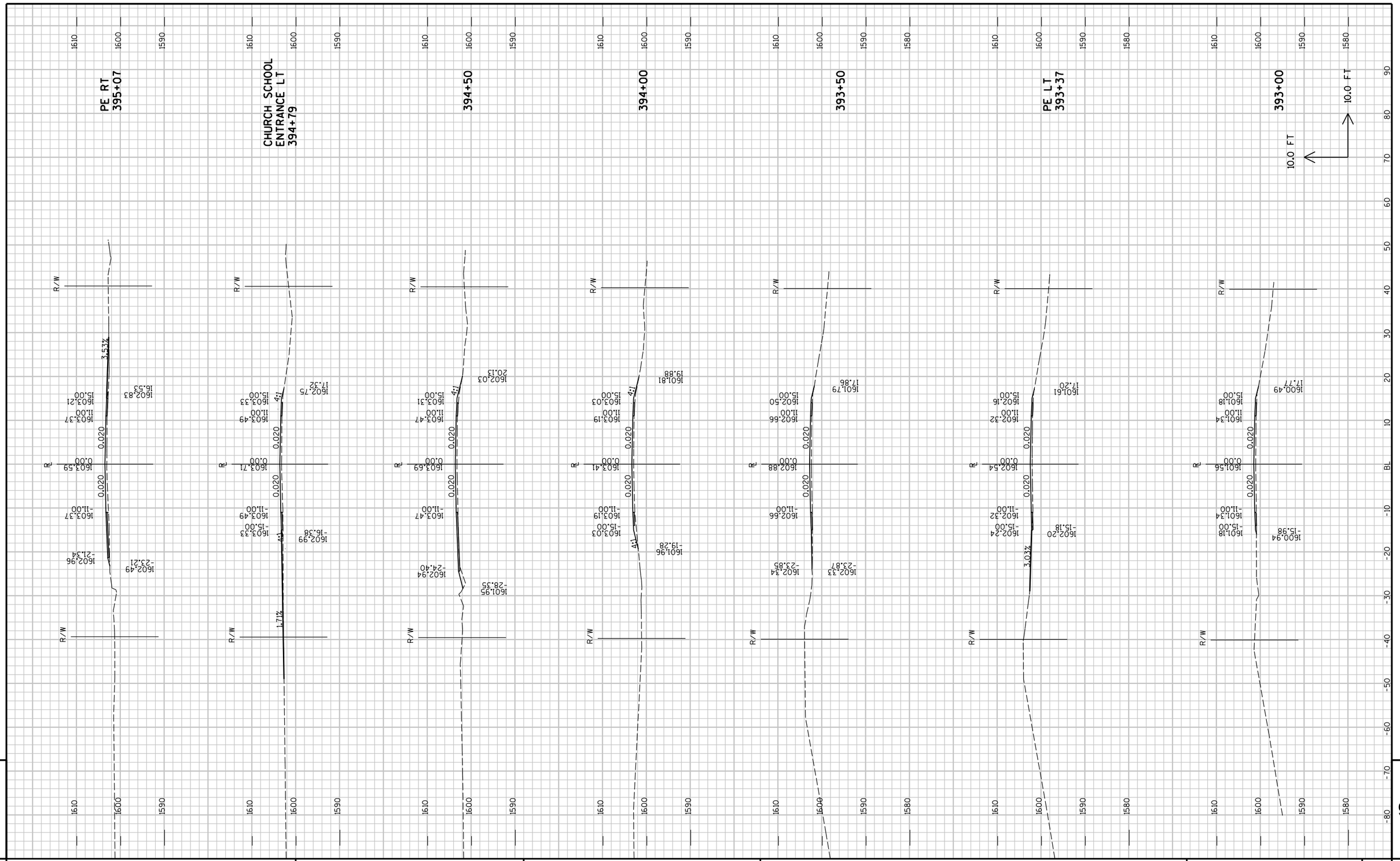

9

PROJECT NO : 8900-06-76	HWY : C.T.H. D	COUNTY : TAYLOR	CROSS SECTIONS - C.T.H. D	SHEET NO: 210	E

9

FILE NAME : P:\PT\T\Tayhd\108326\CAD\XBTAYD01.dgn PLOT TIME : 10:52:11 AM PLOT DATE : 1/30/2013 PLOT BY : SEH PLOT NAME : PLOT SCALE : N/A

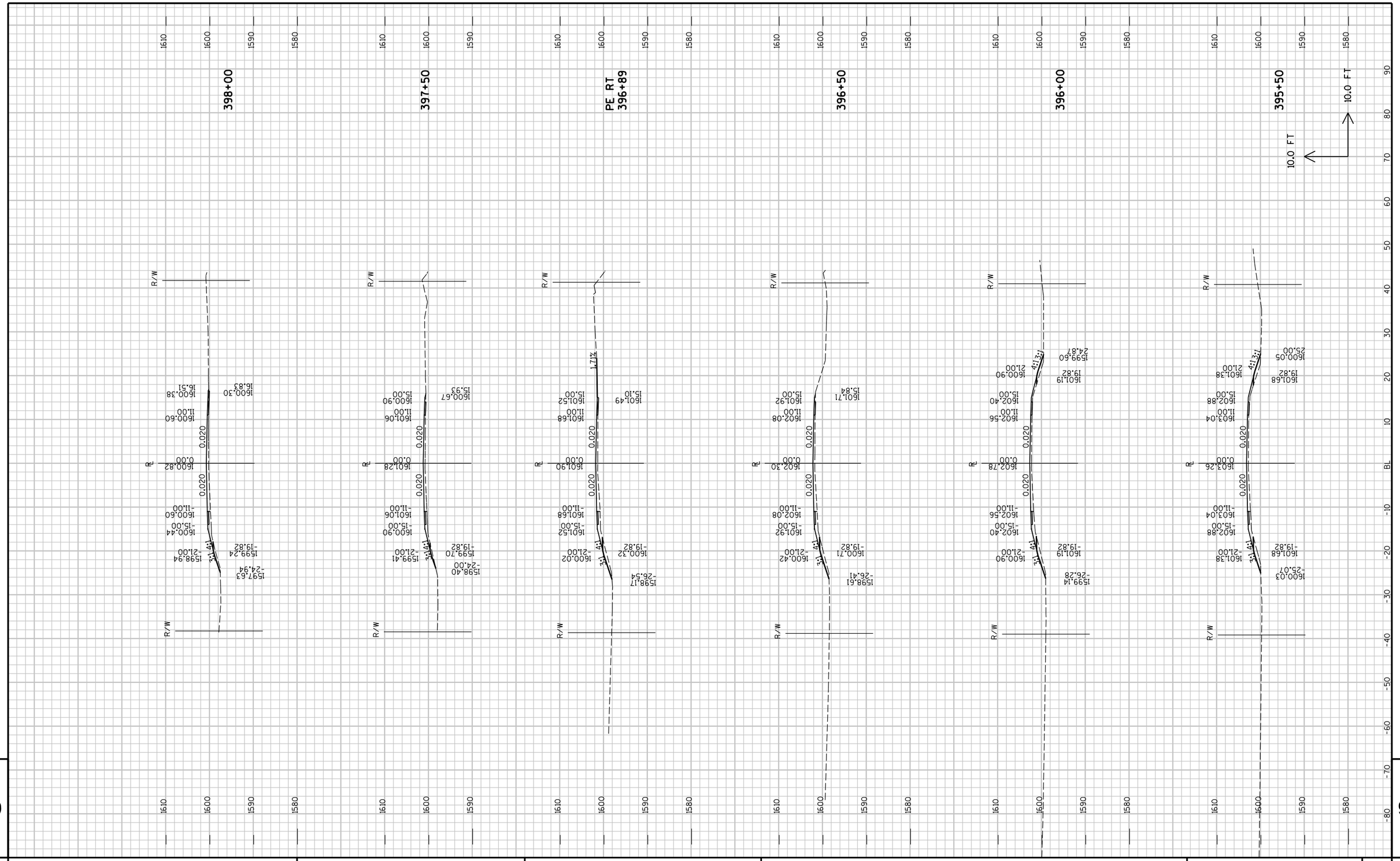

9

PROJECT NO : 8900-06-76	HWY : C.T.H. D	COUNTY : TAYLOR	CROSS SECTIONS - C.T.H. D	SHEET NO:	E

9

FILE NAME : P:\PT\T\Tayhd\108326\CAD\XBTAYD01.dgn PLOT TIME : 10:52:11 AM PLOT DATE : 1/30/2013 PLOT BY : SEH PLOT NAME : PLOT SCALE : N/A

9

9

PROJECT NO : 8900-06-76	HWY : C.T.H. D	COUNTY : TAYLOR	CROSS SECTIONS - C.T.H. D	SHEET NO: 212	E

FILE NAME : P:\PT\Tayhd\108326\CAD\XBTAYD01.dgn PLOT TIME : 10:52:11 AM PLOT DATE : 1/30/2013 PLOT BY : SEH PLOT NAME : PLOT SCALE : N/A

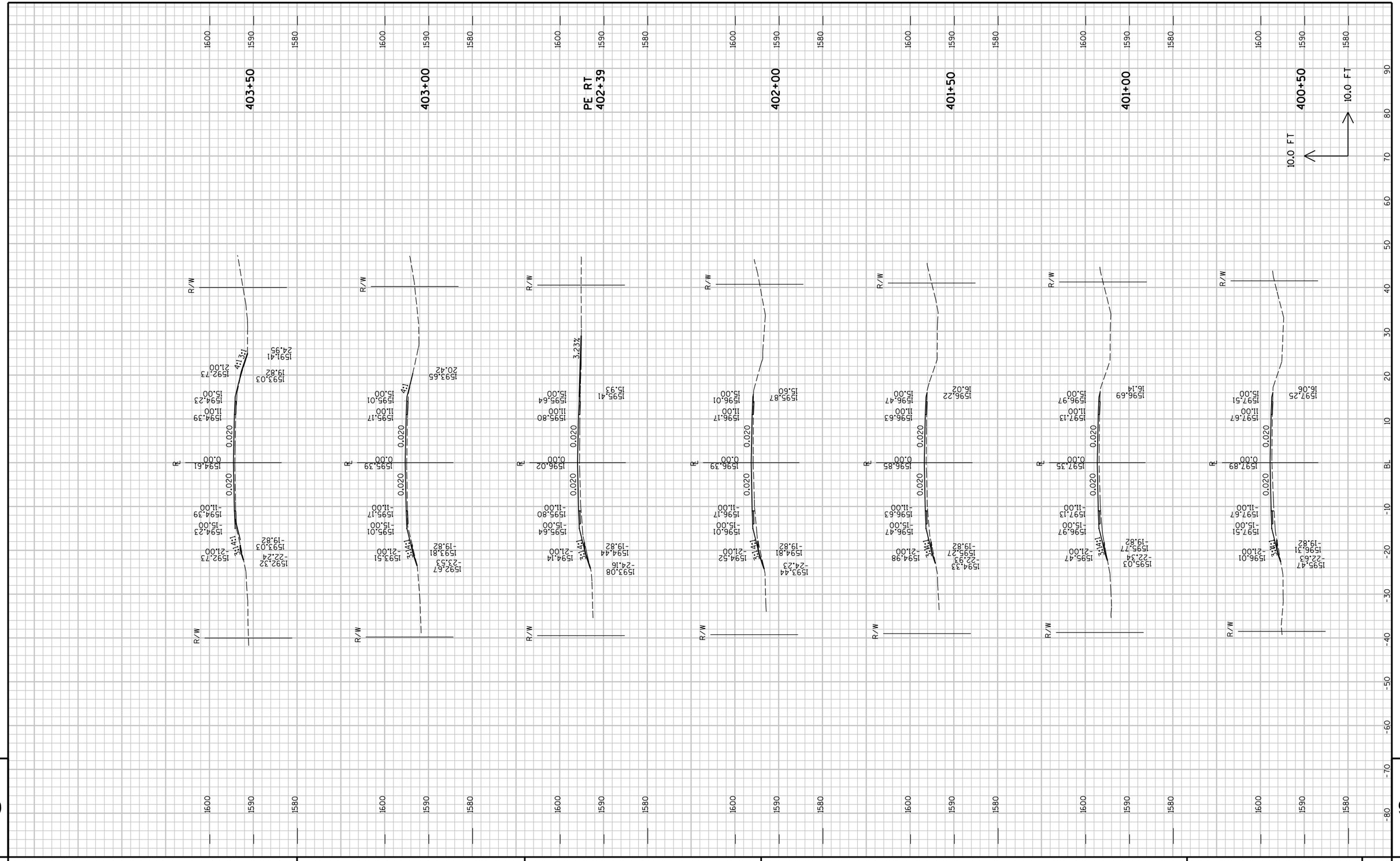

9

9

PROJECT NO : 8900-06-76	HWY : C.T.H. D	COUNTY : TAYLOR	CROSS SECTIONS - C.T.H. D	SHEET NO: 213	E

FILE NAME : P:\PT\T\Tayhd\108326\CAD\XBTAYD01.dgn PLOT TIME : 10:52:11 AM PLOT DATE : 1/30/2013 PLOT BY : SEH PLOT NAME : PLOT SCALE : N/A

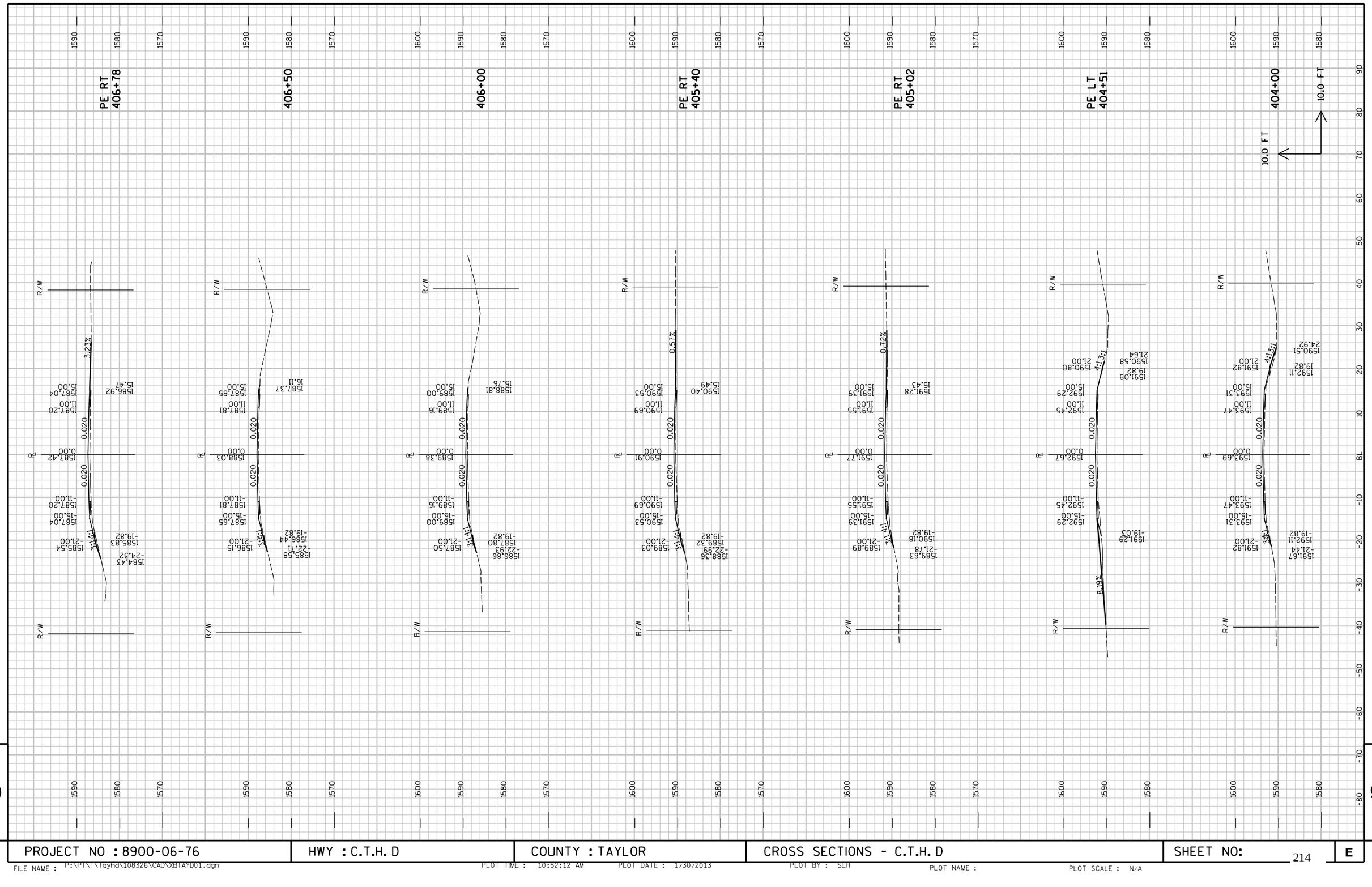

PROJECT NO : 8900-06-76	HWY : C.T.H. D	COUNTY : TAYLOR	CROSS SECTIONS - C.T.H. D	SHEET NO: 214 E

FILE NAME : P:\PT\Taylor\108326\CAD\XBTAYD01.dgn PLOT TIME : 10:52:12 AM PLOT DATE : 1/30/2013 PLOT BY : SEH PLOT NAME : PLOT SCALE : N/A

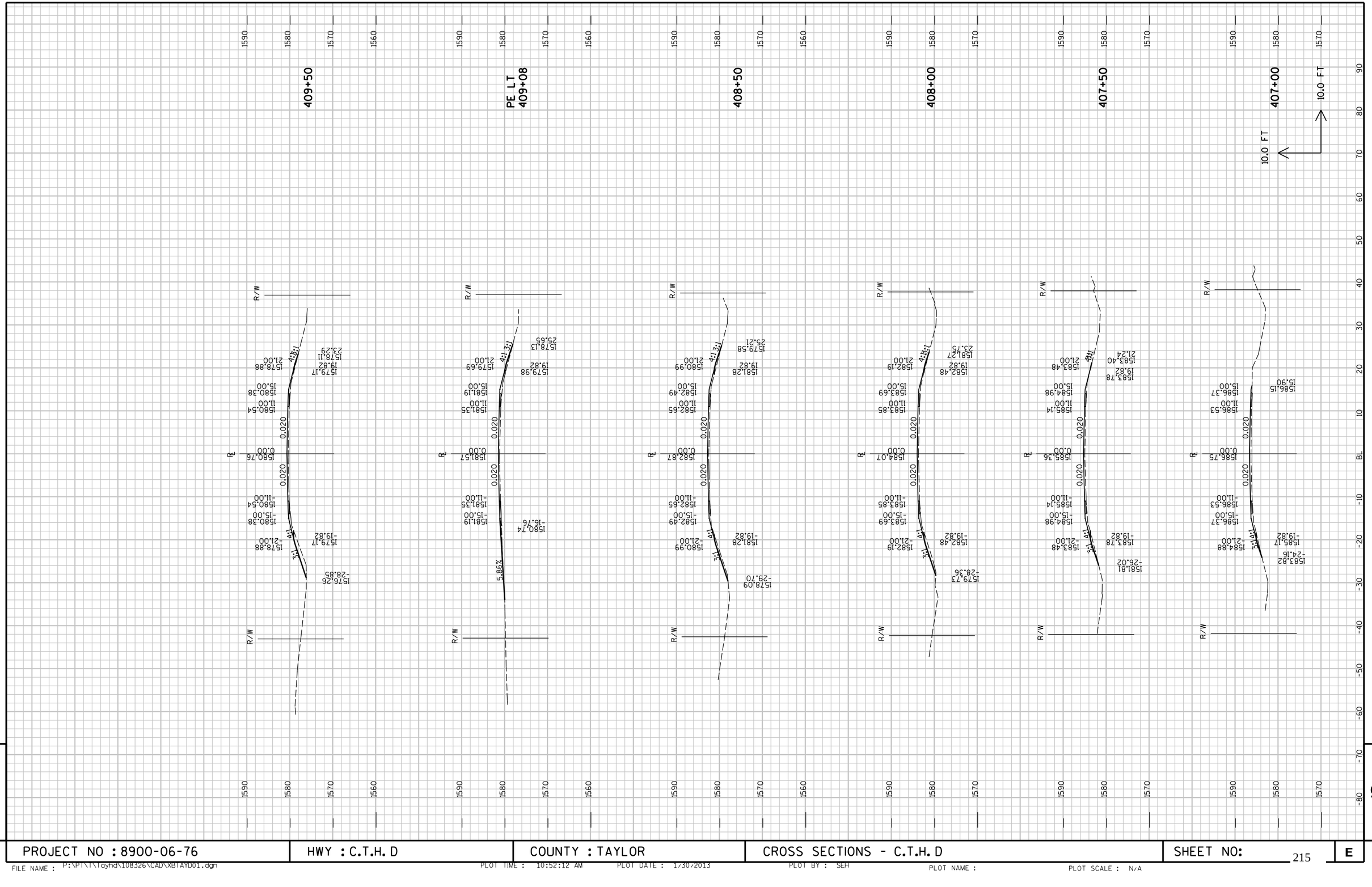

PROJECT NO : 8900-06-76	HWY : C.T.H. D	COUNTY : TAYLOR	CROSS SECTIONS - C.T.H. D	SHEET NO: 215	E

FILE NAME : P:\PT\T\Tayhd\108326\CAD\XBTAYD01.dgn PLOT TIME : 10:52:12 AM PLOT DATE : 1/30/2013 PLOT BY : SEH PLOT NAME : PLOT SCALE : N/A

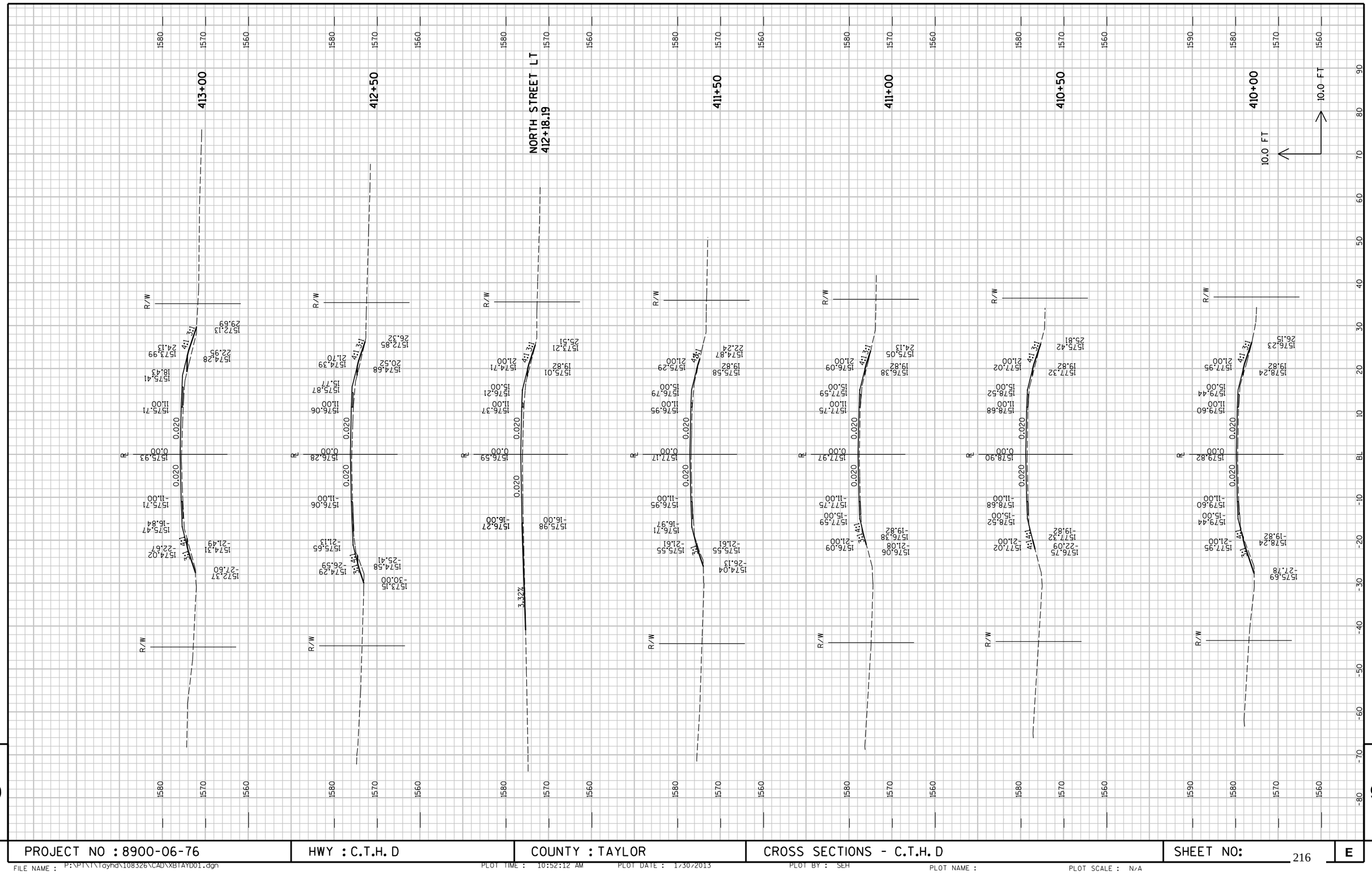

PROJECT NO : 8900-06-76	HWY : C.T.H. D	COUNTY : TAYLOR	CROSS SECTIONS - C.T.H. D	SHEET NO: 216	E

FILE NAME : P:\PT\\Tayhd\108326\CAD\XBTAYD01.dgn PLOT TIME : 10:52:12 AM PLOT DATE : 1730/2013 PLOT BY : SEH PLOT NAME : PLOT SCALE : N/A

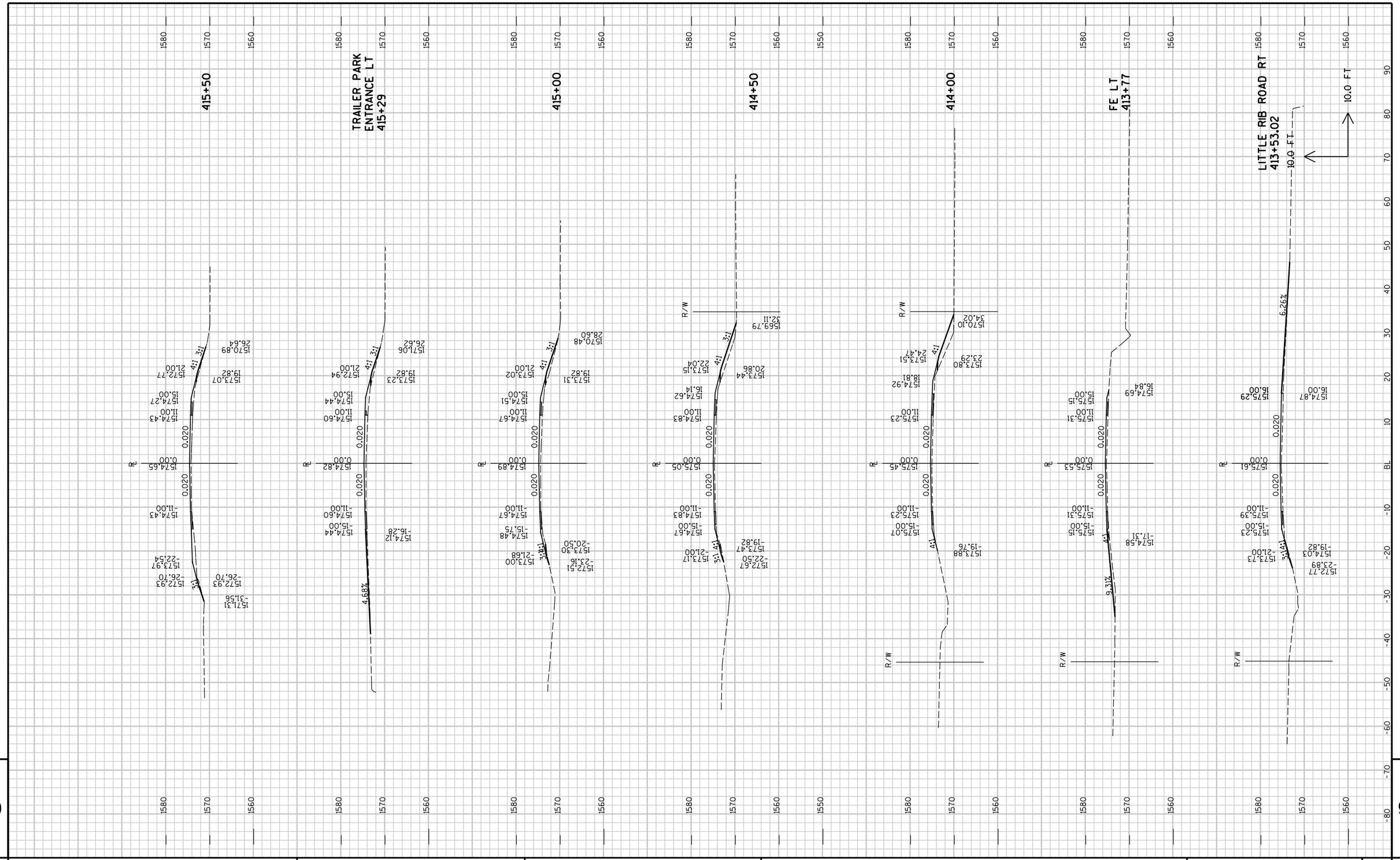

9

9

PROJECT NO : 8900-06-76	HWY : C.T.H. D	COUNTY : TAYLOR	CROSS SECTIONS - C.T.H. D	SHEET NO: 217	E

FILE NAME : P:\PT\TTayhd\108326\CAD\XBTAYD01.dgn PLOT TIME : 10:52:12 AM PLOT DATE : 1/30/2013 PLOT BY : SEH PLOT NAME : PLOT SCALE : N/A

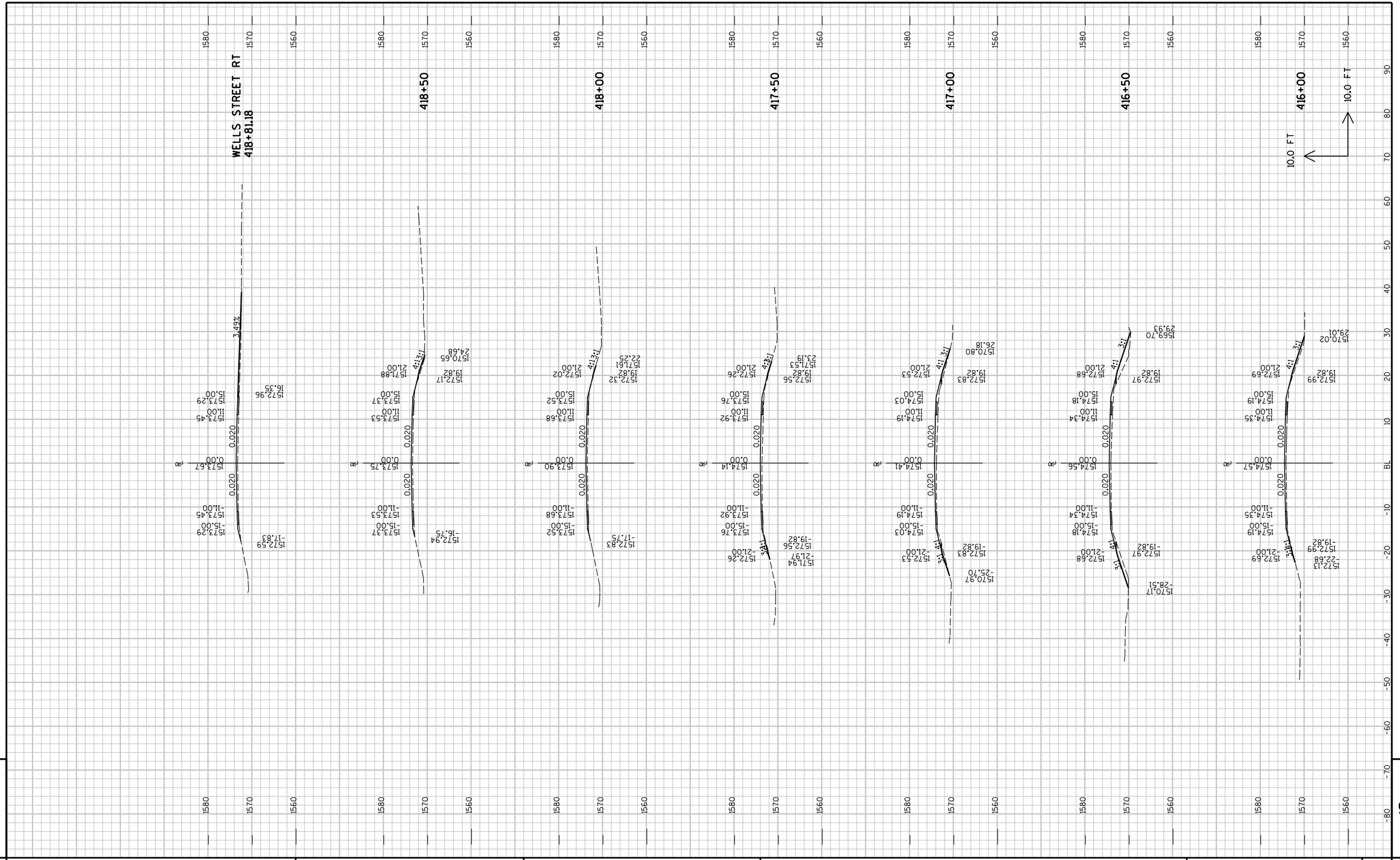

PROJECT NO : 8900-06-76	HWY : C.T.H. D	COUNTY : TAYLOR	CROSS SECTIONS - C.T.H. D	SHEET NO: 218 E

FILE NAME : P:\PT\T\Tayhd\108326\CAD\XBTAYD01.dgn PLOT TIME : 10:52:13 AM PLOT DATE : 1/30/2013 PLOT BY : SEH PLOT NAME : PLOT SCALE : N/A

END CONSTRUCTION
STA 419+73.85

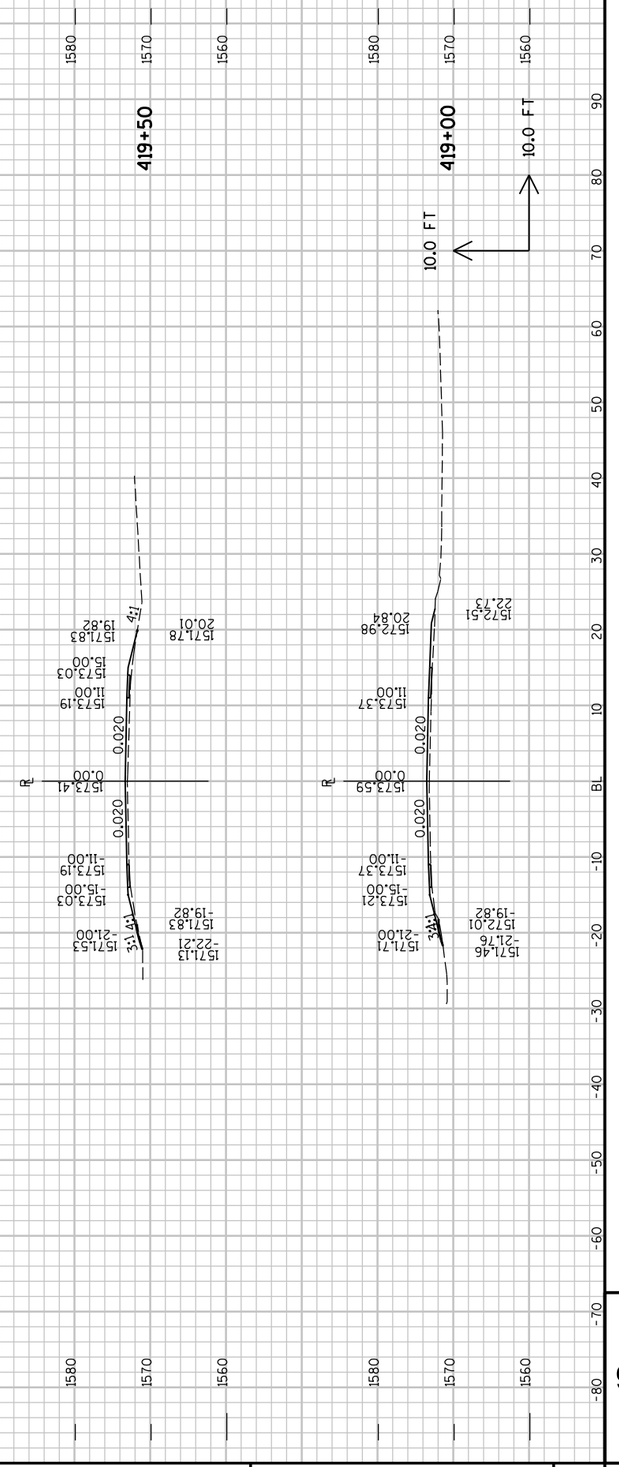
419+50
419+00
10.0 FT
10.0 FT
1580
1570
1560
1580
1570
1560
1580
1570
1560
1580
1570
1560
BL
10
20
30
40
50
60
70
80
90
-10
-20
-30
-40
-50
-60
-70
-80
0.020
0.020
0.020
0.020
4:1
4:1
3:1
3:1
15:1
15:1
15

Wisconsin Department of Transportation

Dedicated people creating transportation solutions
through innovation and exceptional service.

http://www.dot.wisconsin.gov