LAX

MAY 2013

ORDER OF SHEETS

TOTAL SHEETS = 112

PROJECT ID: WITH: 1016-05-78

COUNTY: JUNEAU

STATE OF WISCONSIN
DEPARTMENT OF TRANSPORTATION

PLAN OF PROPOSED IMPROVEMENT

MAUSTON - WISCONSIN DELLS

SAFETY REST AREAS 9 & 10

IH 90

JUNEAU COUNTY

STATE PROJECT	FEDERAL PROJECT	
	PROJECT	CONTRACT
1016-05-78		

STATE PROJECT NUMBER
1016-05-78

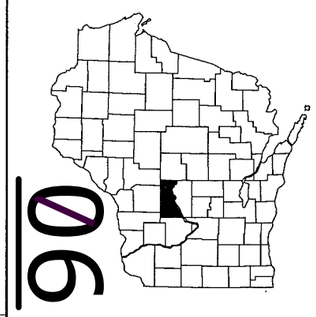

N

DESIGN DESIGNATION

A.A.D.T. RA 9	= 893
A.A.D.T. RA 10	= 1042
D.H.V.	= N/A
D.D.	= N/A
T.	= N/A
DESIGN SPEED	= N/A
ESALS	= N/A

CONVENTIONAL SYMBOLS

PLAN
- CORPORATE LIMITS
- PROPERTY LINE
- LOT LINE
- LIMITED HIGHWAY EASEMENT
- EXISTING RIGHT OF WAY
- PROPOSED OR NEW R/W LINE
- SLOPE INTERCEPT
- REFERENCE LINE
- EXISTING CULVERT
- PROPOSED CULVERT (Box or Pipe)
- COMBUSTIBLE FLUIDS — CAUTION
- MARSH AREA
- WOODED OR SHRUB AREA

PROFILE
- GRADE LINE
- ORIGINAL GROUND
- MARSH OR ROCK PROFILE (To be noted as such) — ROCK
- SPECIAL DITCH — LABEL
- GRADE ELEVATION — 95.36
- CULVERT (Profile View)

UTILITIES
- ELECTRIC — E
- FIBER OPTIC — FO
- GAS — G
- SANITARY SEWER — SAN
- STORM SEWER — SS
- TELEPHONE — T
- WATER — W
- UTILITY PEDESTAL
- POWER POLE
- TELEPHONE POLE

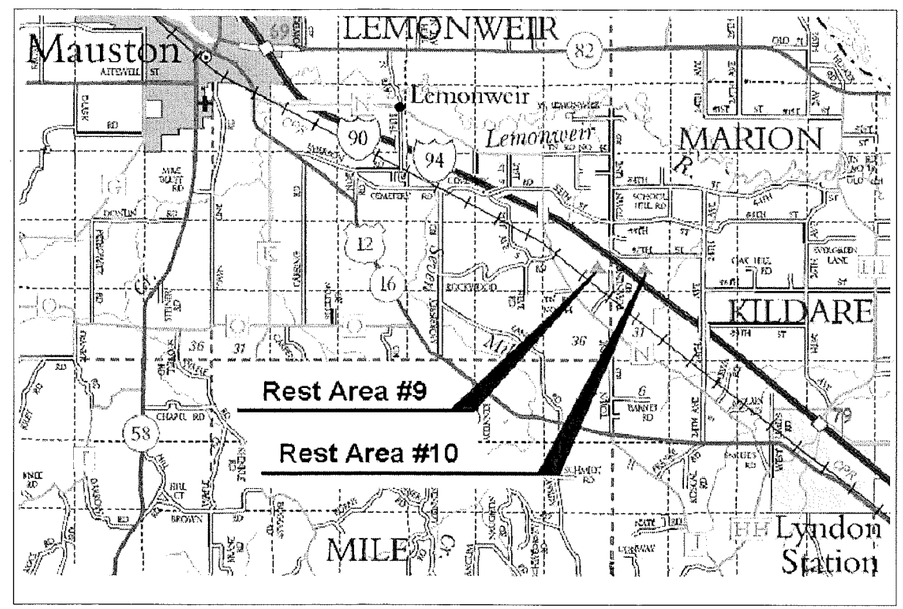

LAYOUT

SCALE 0 --- MI.

TOTAL NET LENGTH OF CENTERLINE = --- MI.

STATE OF WISCONSIN
DEPARTMENT OF TRANSPORTATION

PREPARED BY

Surveyor	
Designer	RICHARD SCHMALE
Project Manager	RICHARD SCHMALE
Regional Examiner	
Regional Supervisor	TODD MATHESON
C.O. Examiner	

APPROVED FOR THE DEPARTMENT

DATE: 1/7/2013 Todd Matheson (Signature)

E

2

GENERAL NOTES

DISTURBED AREAS WITHIN THE CONSTRUCTION LIMITS ARE TO BE SEEDED, FERTILIZED AND MULCHED AS NOTED ON THE PLANS AND AS DIRECTED BY THE ENGINEER. STAGING AREAS USED BY THE CONTRACTOR SHALL BE RESTORED AT THE CONTRACTORS EXPENSE.

SEED MIX 30 SHALL BE USED ON ALL DISTURBED AREAS.

THE LOCATION OF EXISTING UTILITIES HAS NOT BEEN SHOWN ON THE PLANS. IT IS THE CONTRACTORS RESPONSIBILITY TO CONTACT DIGGERS HOTLINE PRIOR TO BEGINNING ANY WORK ON THE SITE.

NO TREES OR SHRUBS ARE TO BE REMOVED WITHOUT APPROVAL OF THE ENGINEER.

ALIGNMENT DIAGRAMS FROM THE ORIGINAL CONSTRUCTION ARE PROVIDED AS REFERENCE FOR LAYOUT OF THE REPLACEMENT PAVEMENT. THE SURVEYOR SHALL ADJUST COORDINATES AS NEEDED TO FIT THE PAVEMENT TO MATCH EXISTING FIELD LOCATIONS.

LEGEND

- ###### EROSION MAT CLASS I, TYPE A OR B
- EROSION MAT CLASS II OR III (EXCEPT II, TYPE A)
- SOD
- SOD, REINFORCED W/ EROSION MAT CLASS II, TYPE A
- SILT FENCE
- EROSION BALE, BARRIER
- DITCH DIKE
- RIP RAP OR STONE DITCH CHECK
- INTERCEPTING EMBANKMENT
- SLOPE INTERCEPT
- ASPH — ASPHALTIC FLUME
- CONC — CONCRETE FLUME
- SHEET PILING
- TURBIDITY BARRIER
- SILT SCREEN
- INLET PROTECTION
- TEMPORARY DITCH CHECK
- CULVERT PIPE DITCH CHECK
- TSB — TEMPORARY SEDIMENT BASIN
- SURFACE WATER FLOW

UTILITY CONTACTS

CARL DONAHUE
AT&T LEGACY - COMMUNICATION LINE
866 ROCK CREEK RD
PLANO, IL 60545
(715) 833-2054
CDONAHUE@ATT.COM

MIKE OLSEN
ATC MANAGEMENT, INC. - ELECTRICITY
801 O'KEEFE RD
P.O. BOX 6113
DE PERE, WI 54115-6113
(920) 338-6582
MOLSEN@ATCLLC.COM

JASON HOGAN
ALLIANT ENERGY - ELECTRICITY
SUITE 1000
4902 N BILTMORE LANE
MADISON, WI 53718
(608) 458-4871
JASONHOGAN@ALLIANTENERGY.COM

JASON HOGAN
ALLIANT ENERGY - GAS/PETROLEUM
SUITE 1000
4902 N BILTMORE LANE
MADISON, WI 53718
(608) 458-4871
JASONHOGAN@ALLIANTENERGY.COM

ROBERT CHURCH
FRONTIER COMMUNICATIONS OF WI LLC - COMMUNICATION LINE
118 DIVISION STREET
PLYMOUTH, WI 53073
(608) 837-1881
ROBERT.CHURCH@FTR.NET

TIM ORCUTT
MEDIACOM LLC WISCONSIN - COMMUNICATION LINE
3033 ASBURY RD
DUBUQUE, WI 52001
(608) 326-0478
TORCUTT@MEDIACOMLLC.COM

SCOTT BROOKMAN
OAKDALE ELECTRIC COOPERATIVE - ELECTRICITY
489 N OAKWOOD ST
P.O. BOX 128
OAKDALE, WI 54649
(608) 372-4131
SBROOKMA@OAKDALEREC.COM

JEFF MADSON
WISCONSIN DEPARTMENT OF TRANSPORTATION - COMMUNICATION LINE
STE. 300
433 W. ST. PAUL AVE.
MILWAUKEE, WI 53203-3007
(414) 225-3723
JEFFREY.MADSON@DOT.WI.GOV

CONTACTS

WDNR CONTACT
MARC HERSHFIELD
DNR SERVICE CENTER
473 GRIFFITH DRIVE
WISCONSIN RAPIDS, WI 54494
(715) 421-7867
MARC.HERSHFIELD@WISCONSIN.GOV

WISDOT MAINTENANCE - JUNEAU COUNTY
JOHN C MUELLER
3550 MORMON COULEE RD
LA CROSSE WI 54601
(608) 789-7877
JOHN.MUELLER@DOT.WI.GOV

REST AREA MAINTENANCE
JOSEPH GIERTYCH
HANDISHOP INDUSTRIES, INC
1411 NORTH SUPERIOR AVENUE
TOMAH, WI 54660
608-343-7059
JGIERTYCH@HANDISHOP.ORG

JUNEAU COUNTY HIGHWAY DEPARTMENT
MIKE KEICHINGER
STATE HIGHWAY SUPERINTENDENT
930 EAST STATE STREET
MAUSTON, WISCONSIN 53948
(608) 847-5874
MKEICHINGER@CO.JUNEAU.WI.US

WISDOT DESIGNER CONTACT
RICHARD SCHMALE
4802 SHEBOYGAN AVE, RM 501
PO BOX 7986
MADISON, WI 53707
(608) 266-7231
RICHARD.SCHMALE@DOT.WI.GOV

DIGGERS HOTLINE

Call 811 3 Work Days Before You Dig
or Toll Free (800) 242-8511
Hearing Impaired TDD (800) 542-2289
www.DiggersHotline.com

2

2

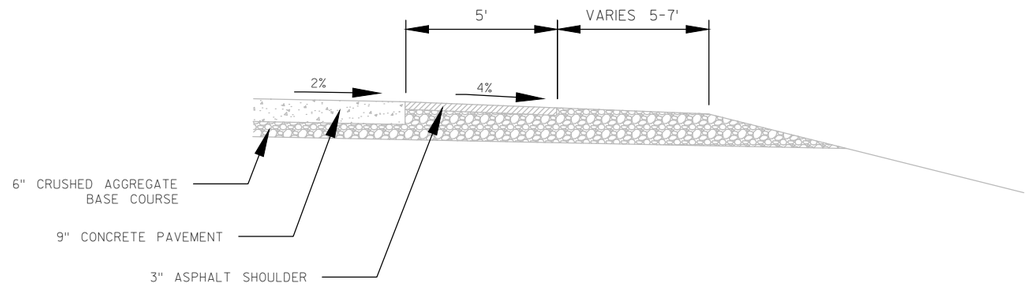

EXISTING RIGHT SIDE SHOULDER

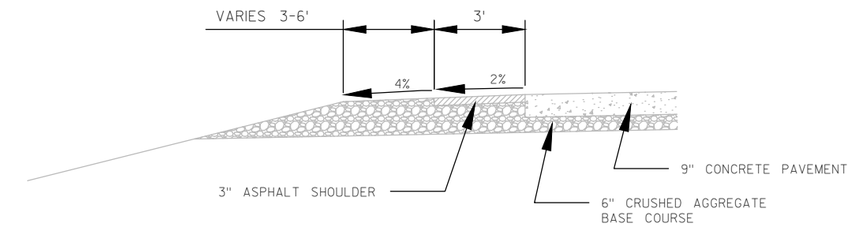

EXISTING LEFT SIDE SHOULDER

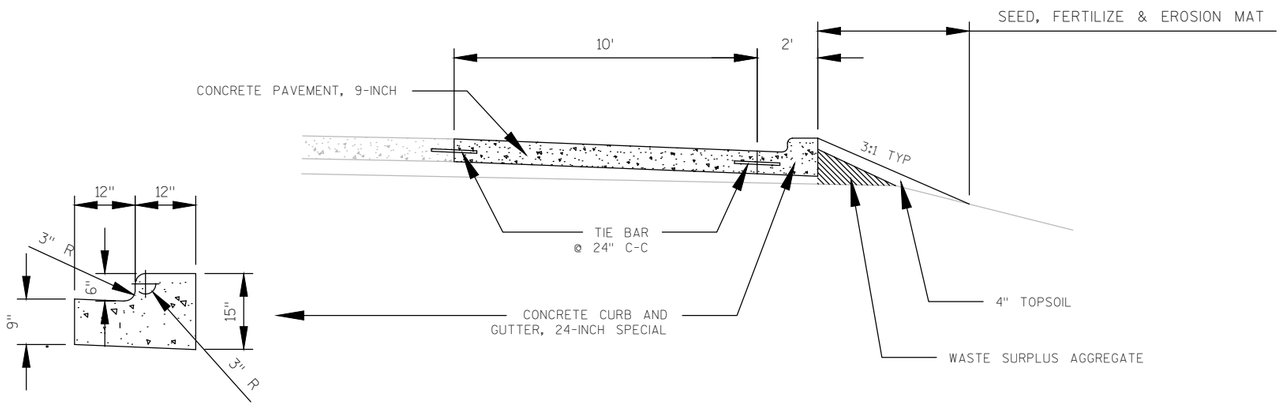

PROPOSED PARKING LANE

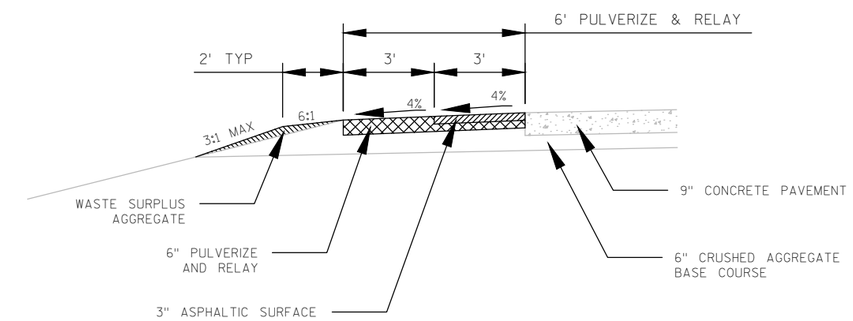

PROPOSED LEFT SIDE SHOULDER

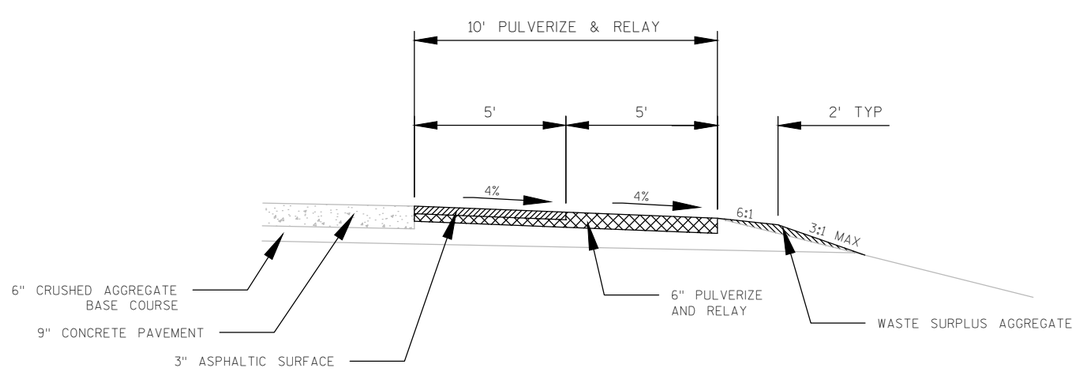

PROPOSED RIGHT SIDE SHOULDER

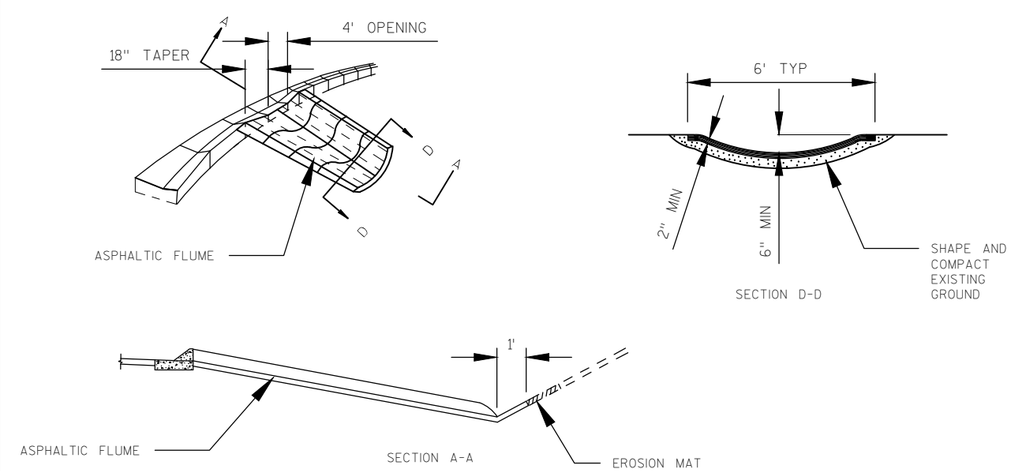

ASPHALTIC FLUME DETAIL

PROJECT NO:1016-05-78	HWY:REST AREAS 9 & 10	COUNTY:JUNEAU	PLAN: TYPICAL SECTIONS	SHEET 3	E

2

LEGEND

67 REPAIR AREA NUMBER (SEE MQ SCHEDULE)

HC HANDICAP RAMP

PAVEMENT REPAIR AREA

PARTIAL DEPTH REPAIR AREA

REST AREA 9

2

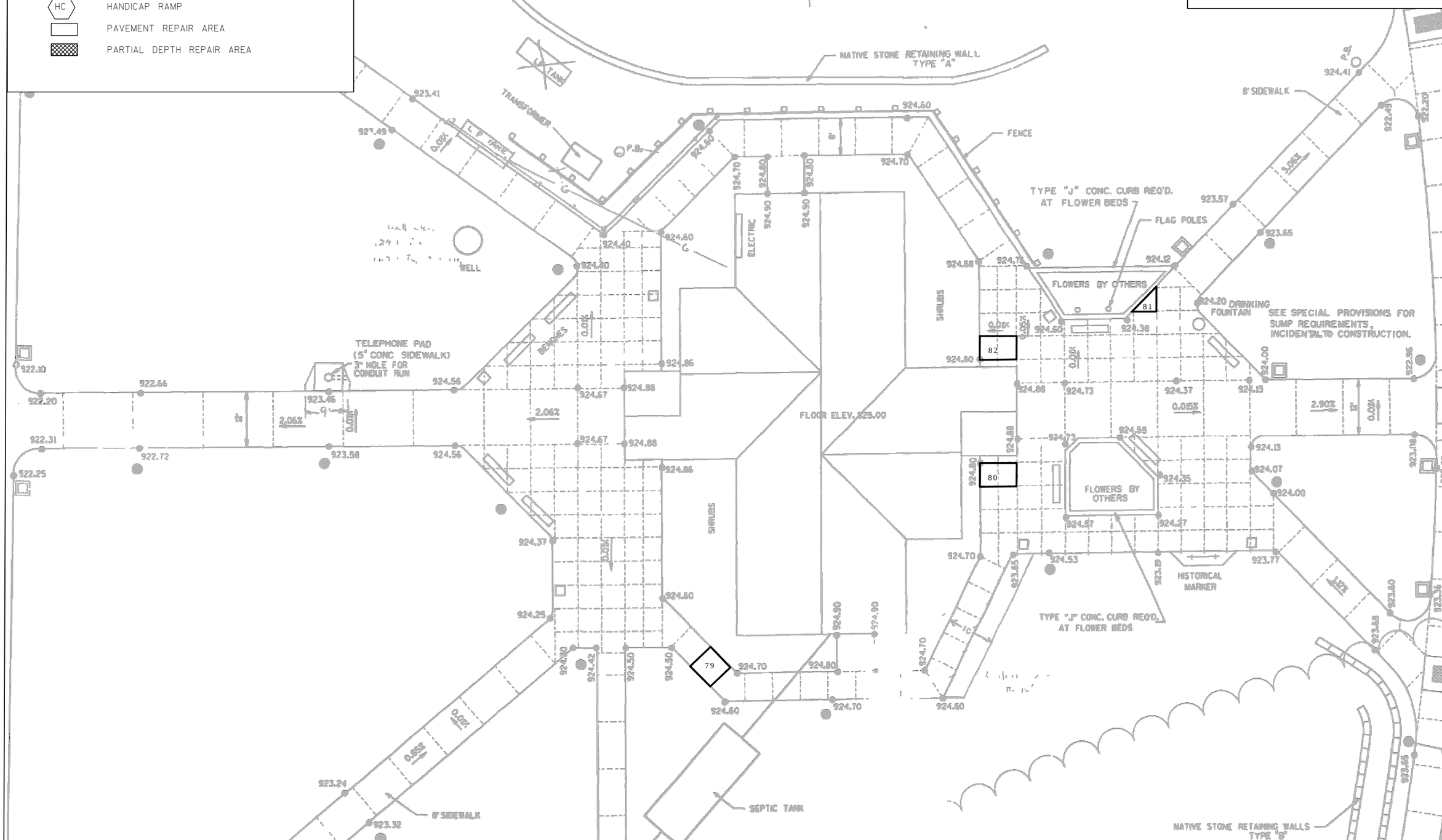

PROJECT NO: 1016-05-78	HWY: REST AREAS 9 & 10	COUNTY: JUNEAU	PLAN: SIDEWALK REPAIRS	SHEET 4	E

FILE NAME : W:\03 PAVTROAD\DOTRJS\RA9_10_26\RA 9_10\CAD\SHEETSPLAN\021201_PD.DWG PLOT DATE : 1/4/2013 8:49 AM PLOT BY : SCHMALE, RICHARD J PLOT NAME : PLOT SCALE : 1 IN:20 FT

WISDOT/CADDS SHEET 42

2

LEGEND

67	REPAIR AREA NUMBER (SEE MQ SCHEDULE)
HC	HANDICAP RAMP
	PAVEMENT REPAIR AREA
	PARTIAL DEPTH REPAIR AREA

REST AREA 9

2

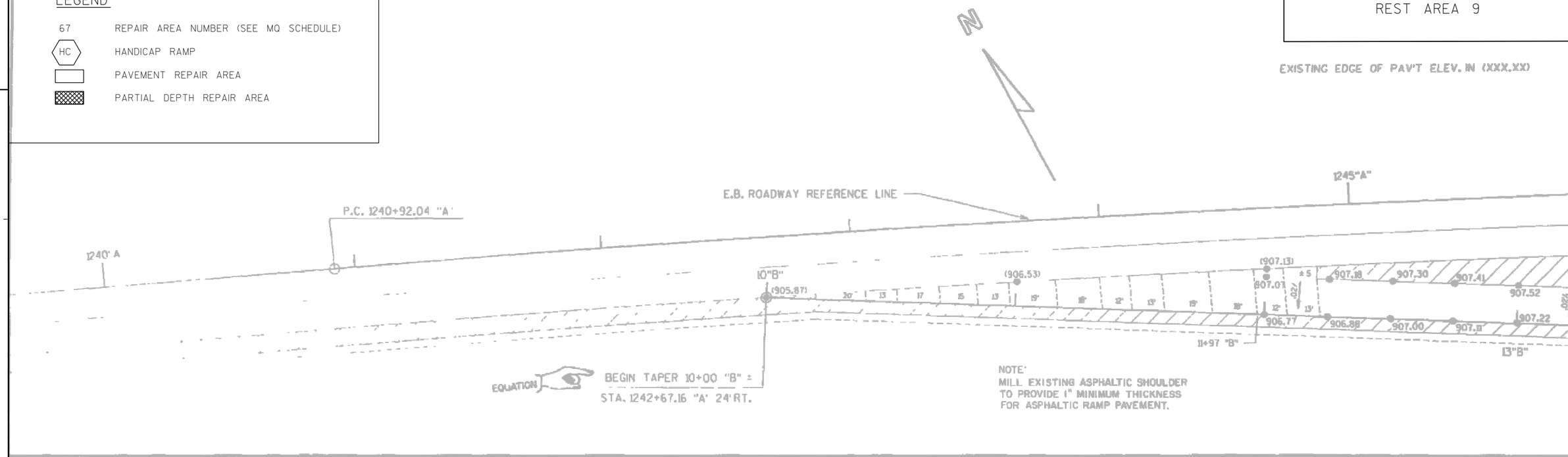

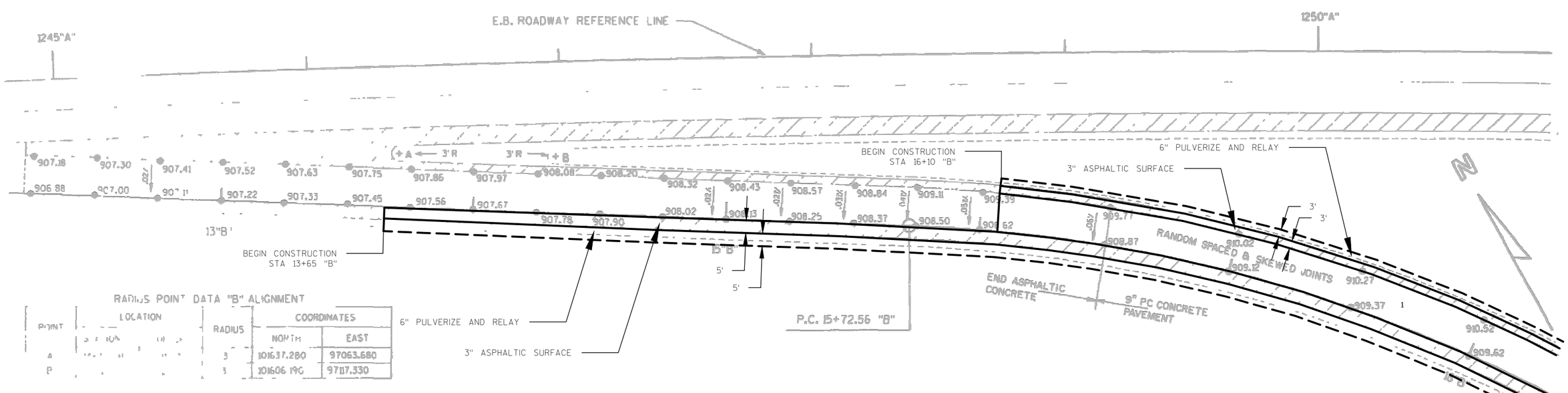

RADIUS POINT DATA "B" ALIGNMENT

POINT	LOCATION	RADIUS	COORDINATES NORTH	COORDINATES EAST
A	[illegible]	[illegible]	101637.280	97063.680
P	[illegible]	[illegible]	101606.190	97117.330

PROJECT NO: 1016-05-78	HWY: REST AREAS 9 & 10	COUNTY: JUNEAU	PLAN: PAVEMENT REPAIRS	SHEET 5	E

2

LEGEND

67	REPAIR AREA NUMBER (SEE MQ SCHEDULE)
HC	HANDICAP RAMP
	PAVEMENT REPAIR AREA
	PARTIAL DEPTH REPAIR AREA

REST AREA 9

2

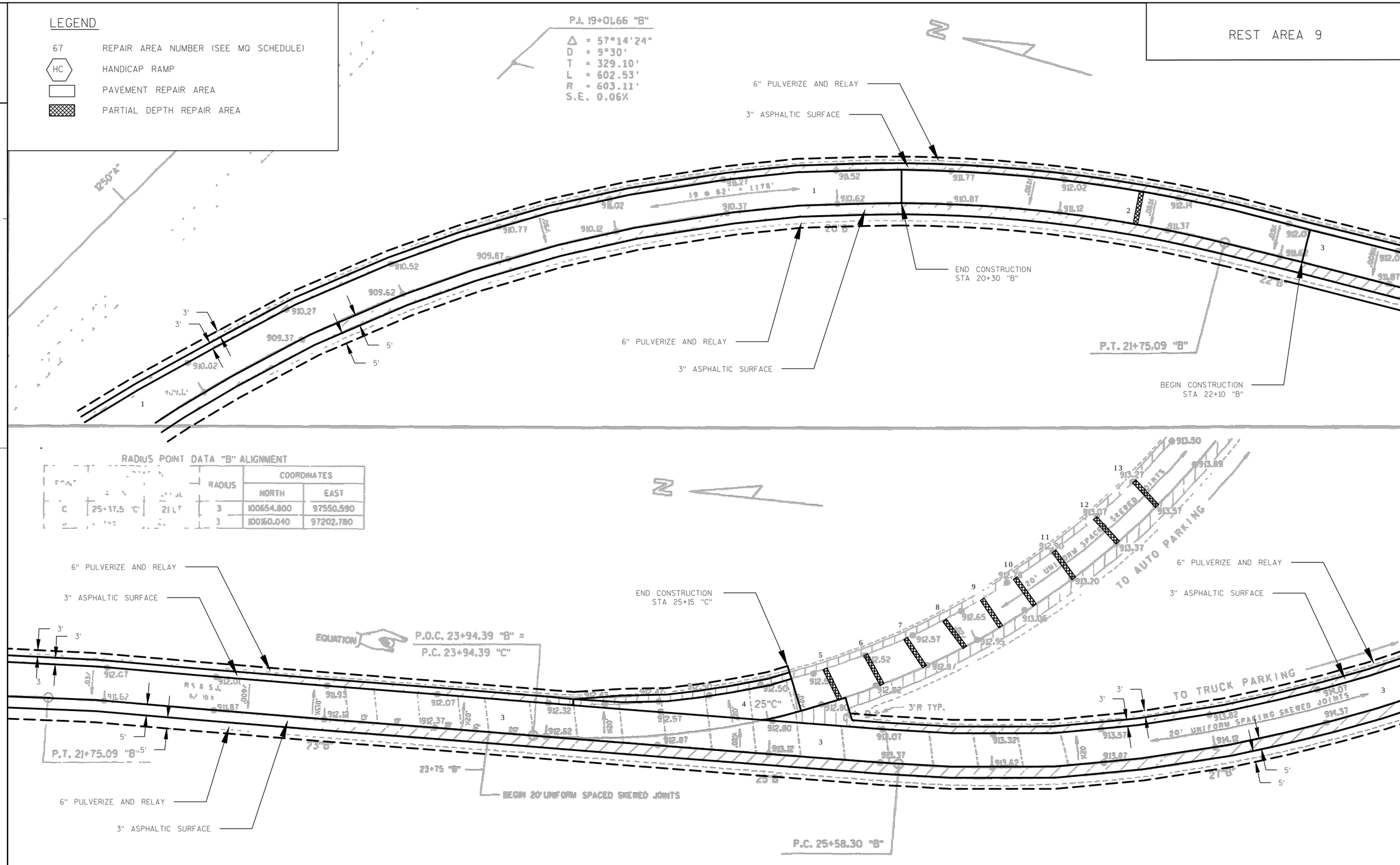

C	25+37.5 "C"	21 LT

RADIUS	COORDINATES	
	NORTH	EAST
3	100654.800	97550.590
3	100160.040	97202.780

PROJECT NO: 1016-05-78	HWY: REST AREAS 9 & 10	COUNTY: JUNEAU	PLAN: PAVEMENT REPAIRS	SHEET 6	E

2

LEGEND

67	REPAIR AREA NUMBER (SEE MQ SCHEDULE)
HC	HANDICAP RAMP
	PAVEMENT REPAIR AREA
	PARTIAL DEPTH REPAIR AREA

REST AREA 9

2

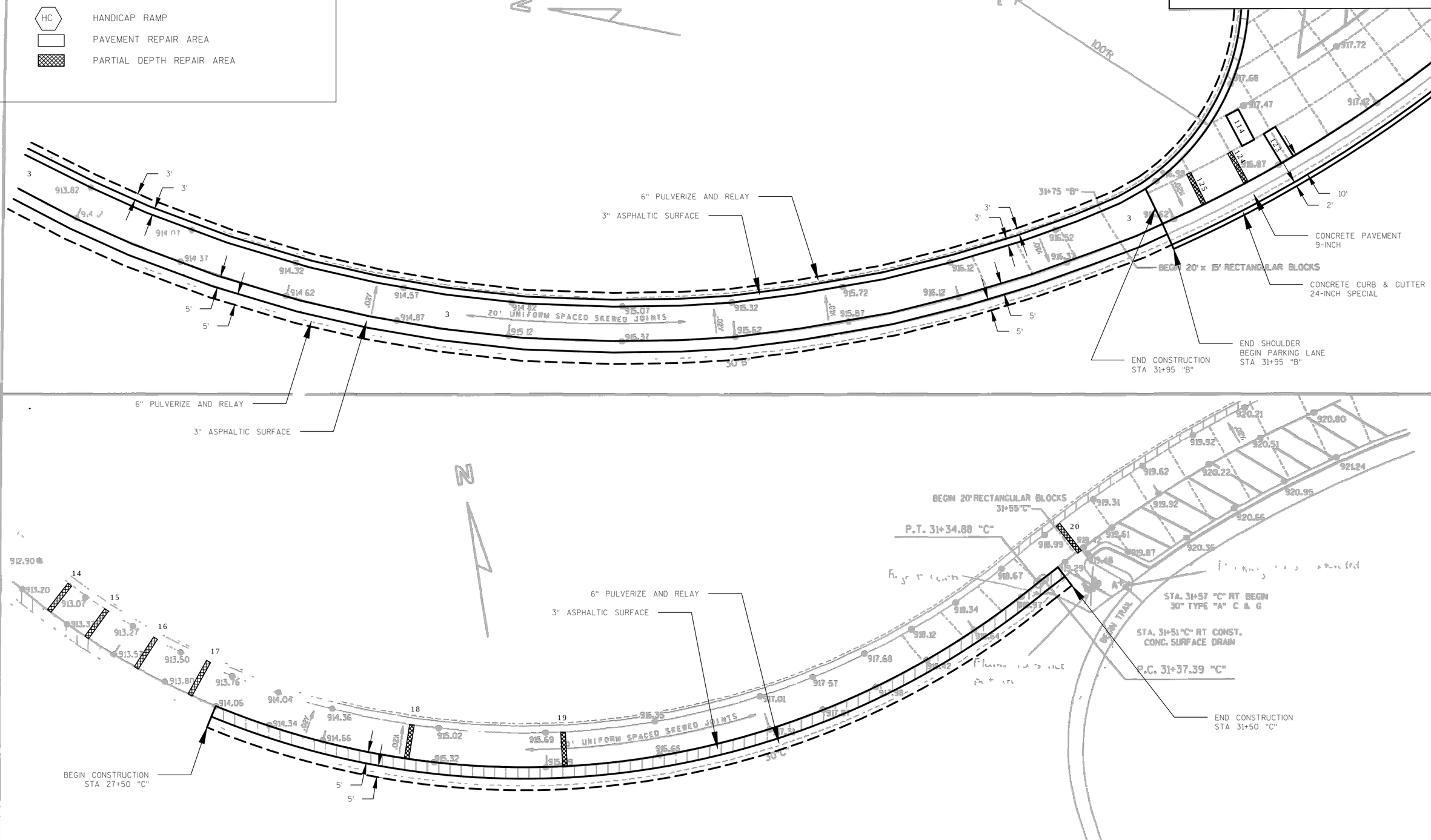

PROJECT NO: 1016-05-78	HWY: REST AREAS 9 & 10	COUNTY: JUNEAU	PLAN: PAVEMENT REPAIRS	SHEET 7	E

2

LEGEND

67	REPAIR AREA NUMBER (SEE MQ SCHEDULE)
HC	HANDICAP RAMP
	PAVEMENT REPAIR AREA
	PARTIAL DEPTH REPAIR AREA

						COMMENTS
I	37+95.5 C	56.5 RT.	5	100409.370	98656.970	
J	37+96.5 C	37.5RT	5'	100425.190	98667.530	
K	38+12.5 C	22.5RT.	10'	100429.910	98688.950	

REST AREA 9

2

P.I. 34+58.46 "C"
Δ = 60°56'38"
D = 10°30'
T = 321.07'
L = 580.42'
R = 545.67'
S.E. 0.02%
R.O.

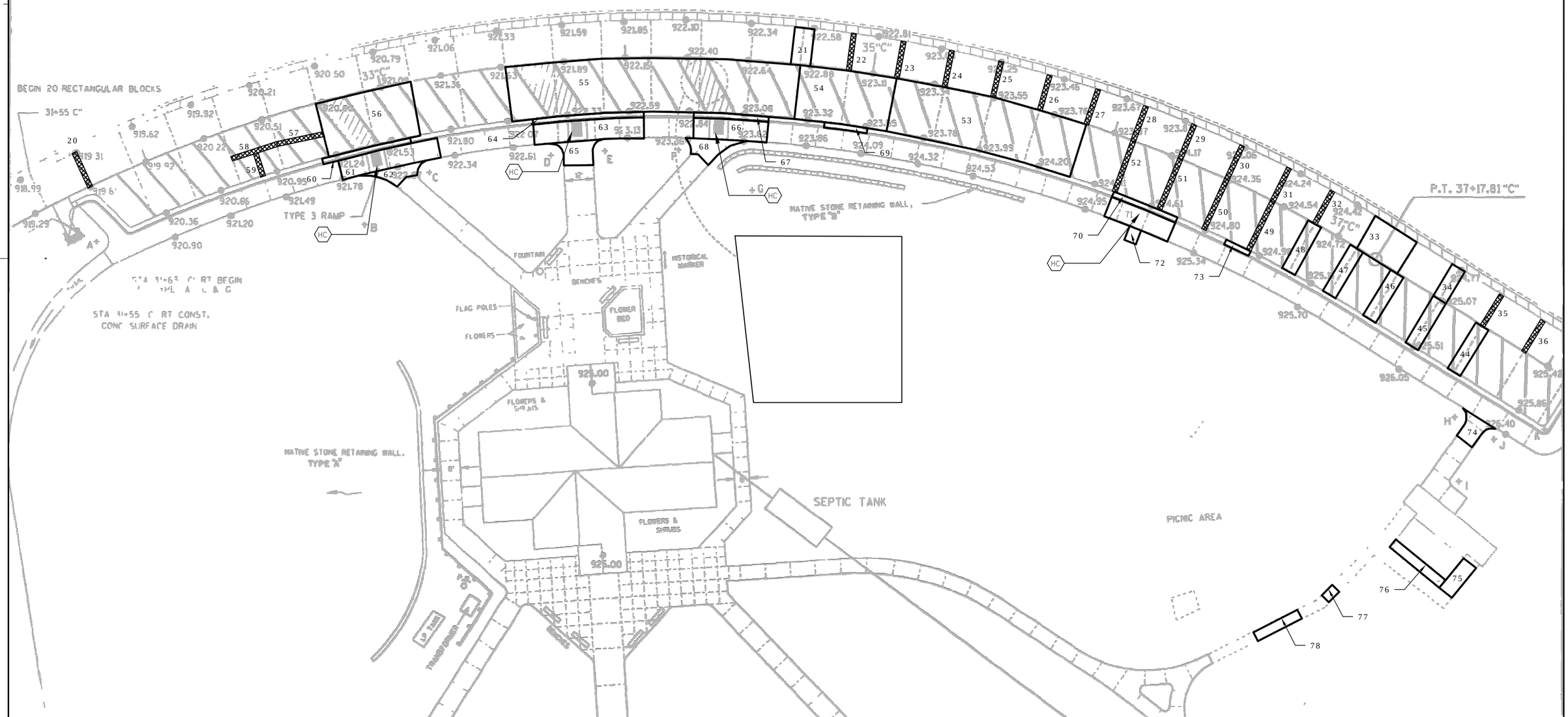

PROJECT NO: 1016-05-78	HWY: REST AREAS 9 & 10	COUNTY: JUNEAU	PLAN: PAVEMENT REPAIRS	SHEET 8	E

FILE NAME : W:\03 PAVTROAD\DOTRJS\RA9_10_26\RA 9_10\CAD\SHEETSPLAN\021205_PD.DWG PLOT DATE : 1/4/2013 8:49 AM PLOT BY : SCHMALE, RICHARD J PLOT NAME : PLOT SCALE : 1 IN:40 FT

WISDOT/CADDS SHEET 42

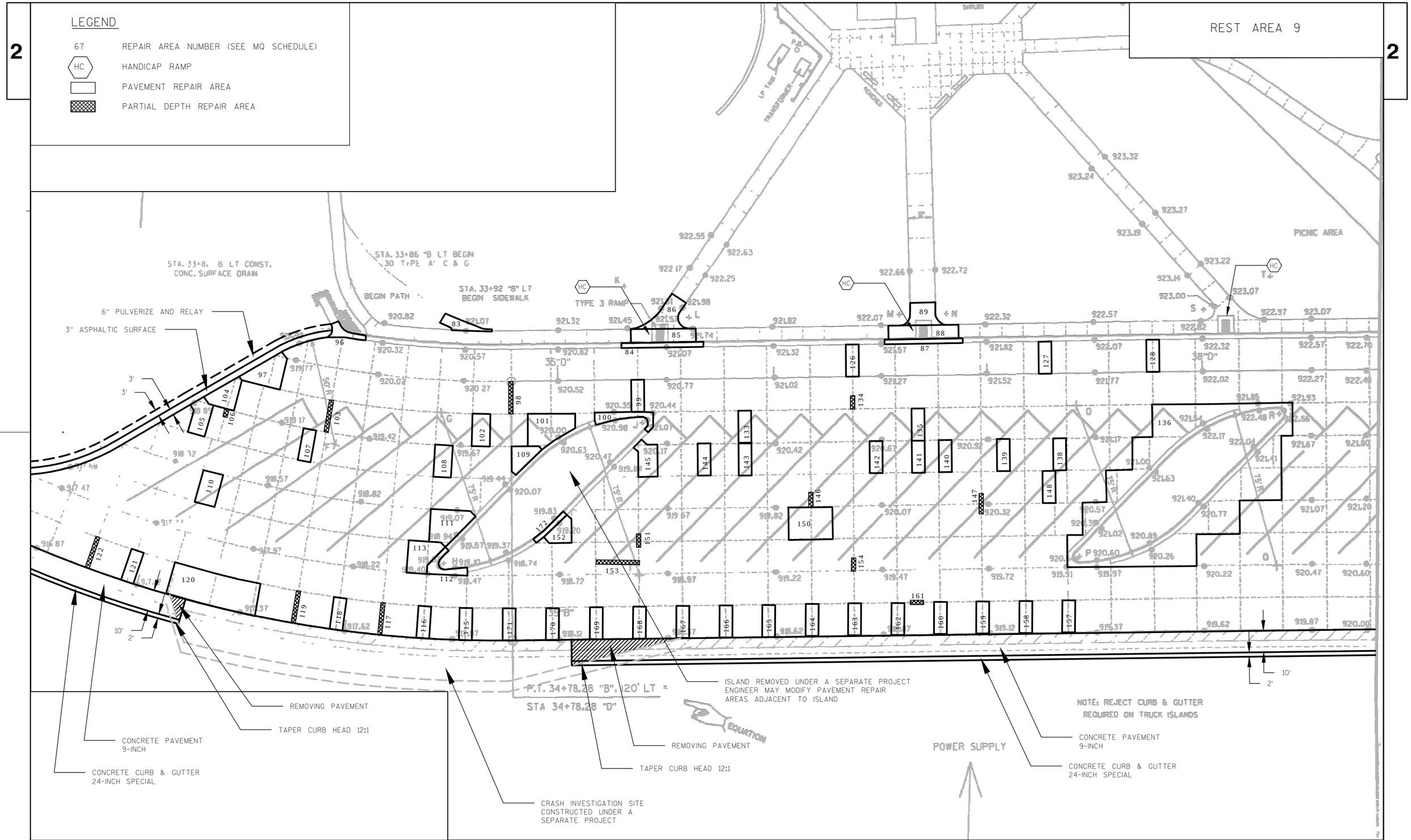

PROJECT NO:1016-05-78	HWY: REST AREAS 9 & 10	COUNTY: JUNEAU	PLAN: PAVEMENT REPAIRS	SHEET 9	E

FILE NAME : W:\03 PAVTROAD\DOTRJS\RA9_10_26\RA 9_10\CAD\SHEETSPLAN\021206_PD.DWG PLOT DATE : 1/4/2013 8:49 AM PLOT BY : SCHMALE, RICHARD J PLOT NAME : PLOT SCALE : 1 IN:40 FT

WISDOT/CADDS SHEET 42

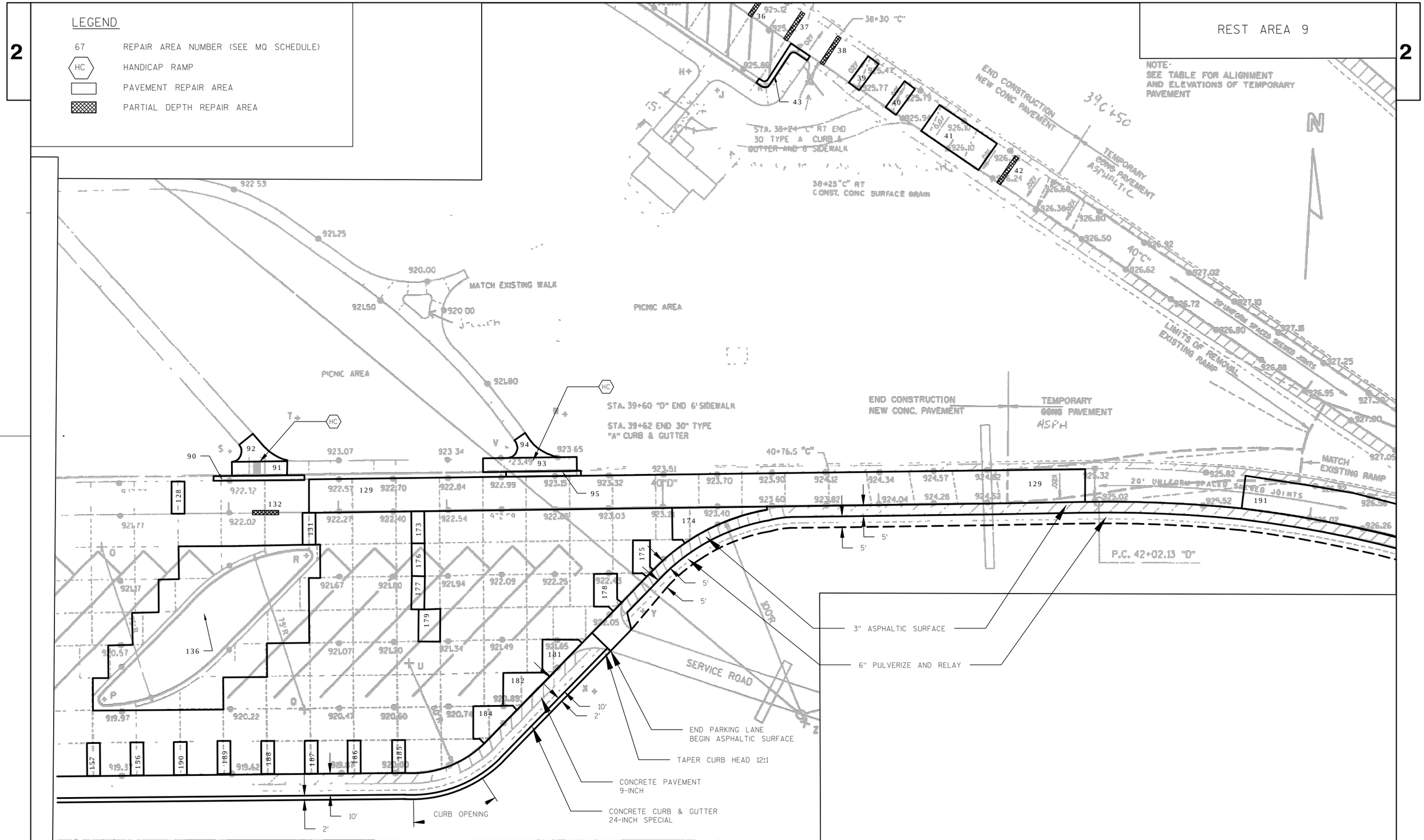

PROJECT NO: 1016-05-78	HWY: REST AREAS 9 & 10	COUNTY: JUNEAU	PLAN: PAVEMENT REPAIRS	SHEET 10	E

REST AREA 9

6" PULVERIZE AND RELAY
3" ASPHALTIC SURFACE
TEMPORARY CONC PAVEMENT
MATCH EXISTING RAMP
3" ASPHALTIC SURFACE
3'R TYP
3'
MATCH EXISTING RAMP
SHAPE TO DRAIN
191
5'
5'
6" PULVERIZE AND RELAY
3" ASPHALTIC SURFACE
CONDUIT LOOP DETECTOR
SEE DETAIL SHEET
45"D"
6" PULVERIZE AND RELAY
3" ASPHALTIC SURFACE
3'
3'
192
45+56.5 "D"
END 20' UNIFORM SPACED SKEWED JOINTS
RANDOM SPACED & SKEWED JOINTS
62' BLOCKS
EQUATION
P.T. 45+30.35 "D" =
STA. 43+57.76 "C"
P.C. 48+11.34 "D"
1275"A"

LEGEND

67	REPAIR AREA NUMBER (SEE MQ SCHEDULE)
HC	HANDICAP RAMP
	PAVEMENT REPAIR AREA
	PARTIAL DEPTH REPAIR AREA

P.I. 49+13.18 "D"

Δ = 6°06'17"
D = 3°00'
T = 101.84'
L = 203.49'
R = 1909.86
S.E. 0.02%
R.O.

6" PULVERIZE AND RELAY
3" ASPHALTIC SURFACE
E.B. ROADWAY REFERENCE LINE
1275"A"
1280"A"
5'
5'
500"
P.C. 48+11.34 "D"
P.T. 50+14.83 "D"
R.S. & S.J.
62' BLK
52+08.5 "D"
END CONSTRUCTION
STA 52+10 "D"

PROJECT NO: 1016-05-78	HWY: REST AREAS 9 & 10	COUNTY: JUNEAU	PLAN: PAVEMENT REPAIRS	SHEET 11	E

2

LEGEND

67	REPAIR AREA NUMBER (SEE MQ SCHEDULE)
HC	HANDICAP RAMP
	PAVEMENT REPAIR AREA
	PARTIAL DEPTH REPAIR AREA

REST AREA 10

2

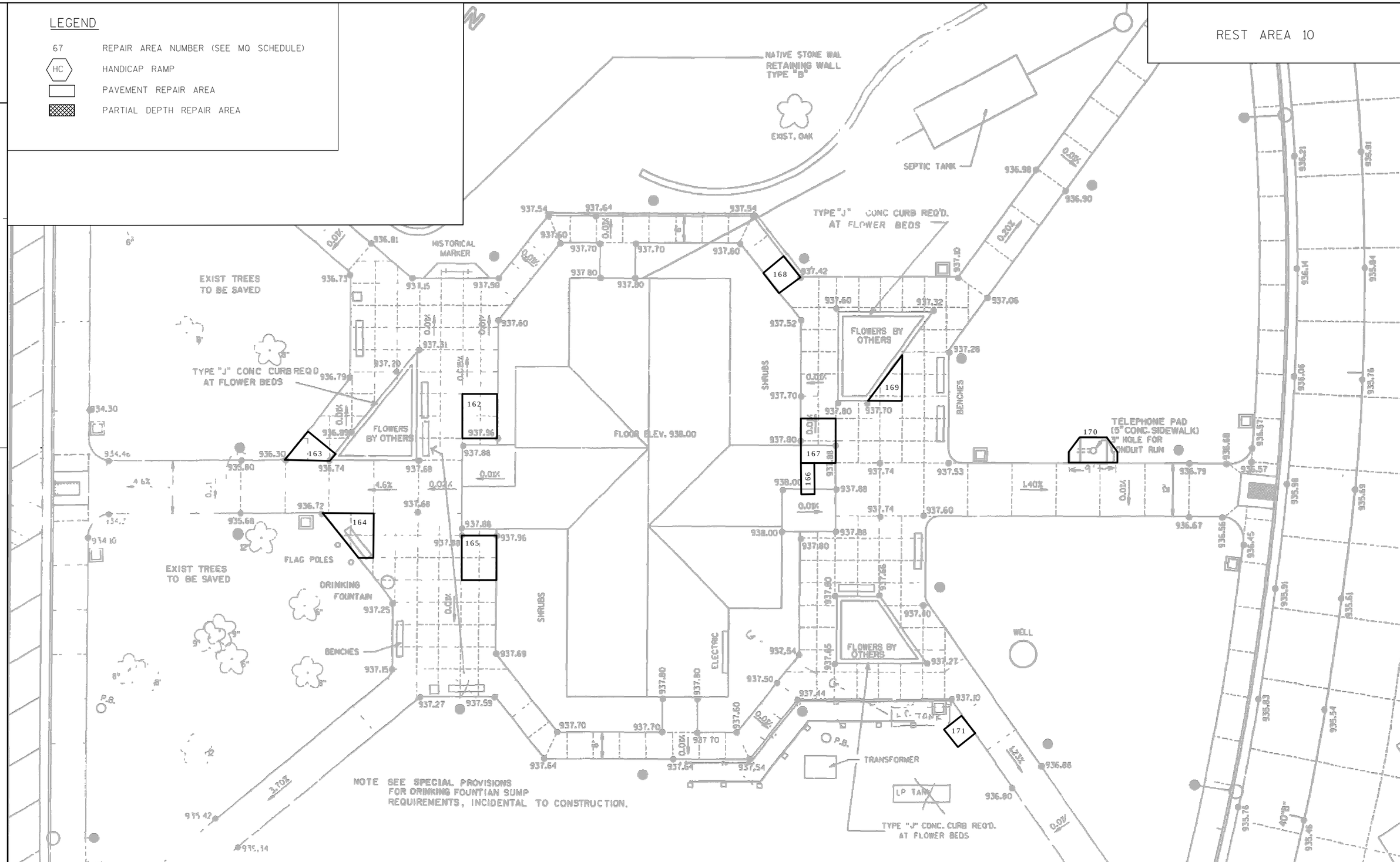

PROJECT NO: 1016-05-78	HWY: REST AREAS 9 & 10	COUNTY: JUNEAU	PLAN: SIDEWALK REPAIRS	SHEET 12	E

FILE NAME : W:\03 PAVTROAD\DOTRJS\RA9_10_26\RA 9_10\CAD\SHEETSPLAN\021211_PD.DWG PLOT DATE : 1/4/2013 8:50 AM PLOT BY : SCHMALE, RICHARD J PLOT NAME : PLOT SCALE : 1 IN:20 FT

WISDOT/CADDS SHEET 42

2

LEGEND

67	REPAIR AREA NUMBER (SEE MQ SCHEDULE)
HC	HANDICAP RAMP
	PAVEMENT REPAIR AREA
	PARTIAL DEPTH REPAIR AREA

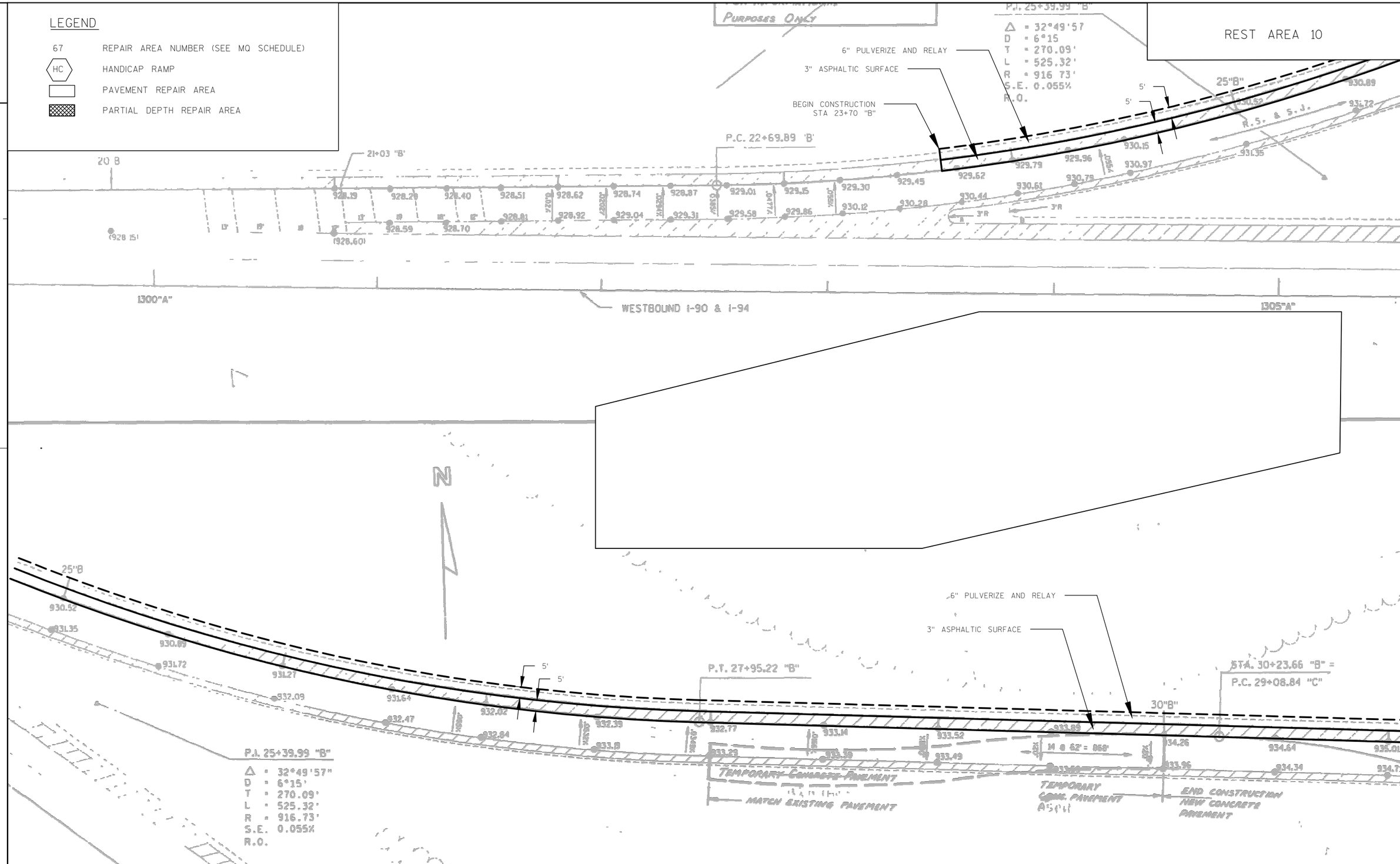

2

PROJECT NO:1016-05-78	HWY: REST AREAS 9 & 10	COUNTY: JUNEAU	PLAN: PAVEMENT REPAIRS	SHEET 13	E

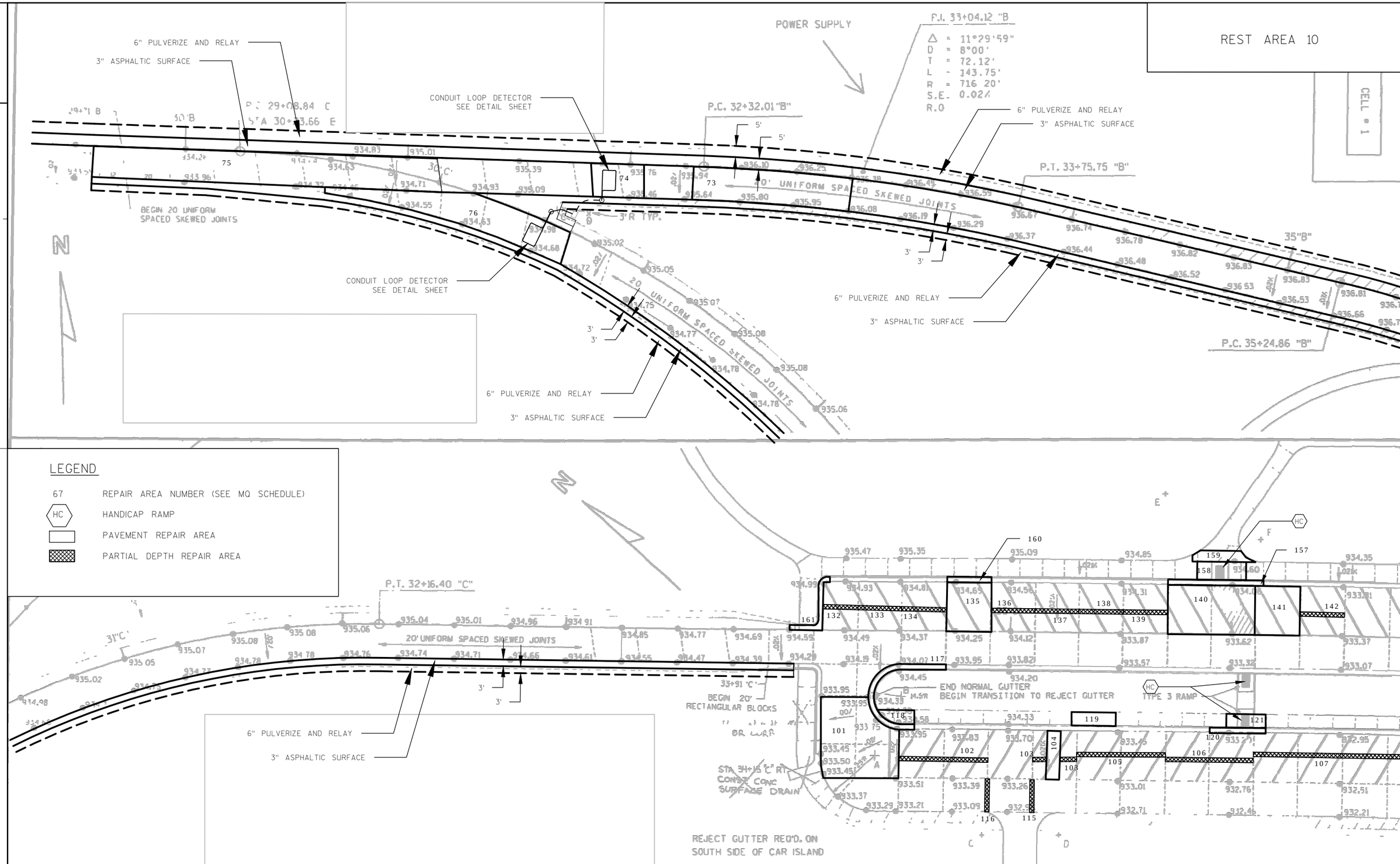

PROJECT NO:1016-05-78	HWY: REST AREAS 9 & 10	COUNTY: JUNEAU	PLAN: PAVEMENT REPAIRS	SHEET 14	E

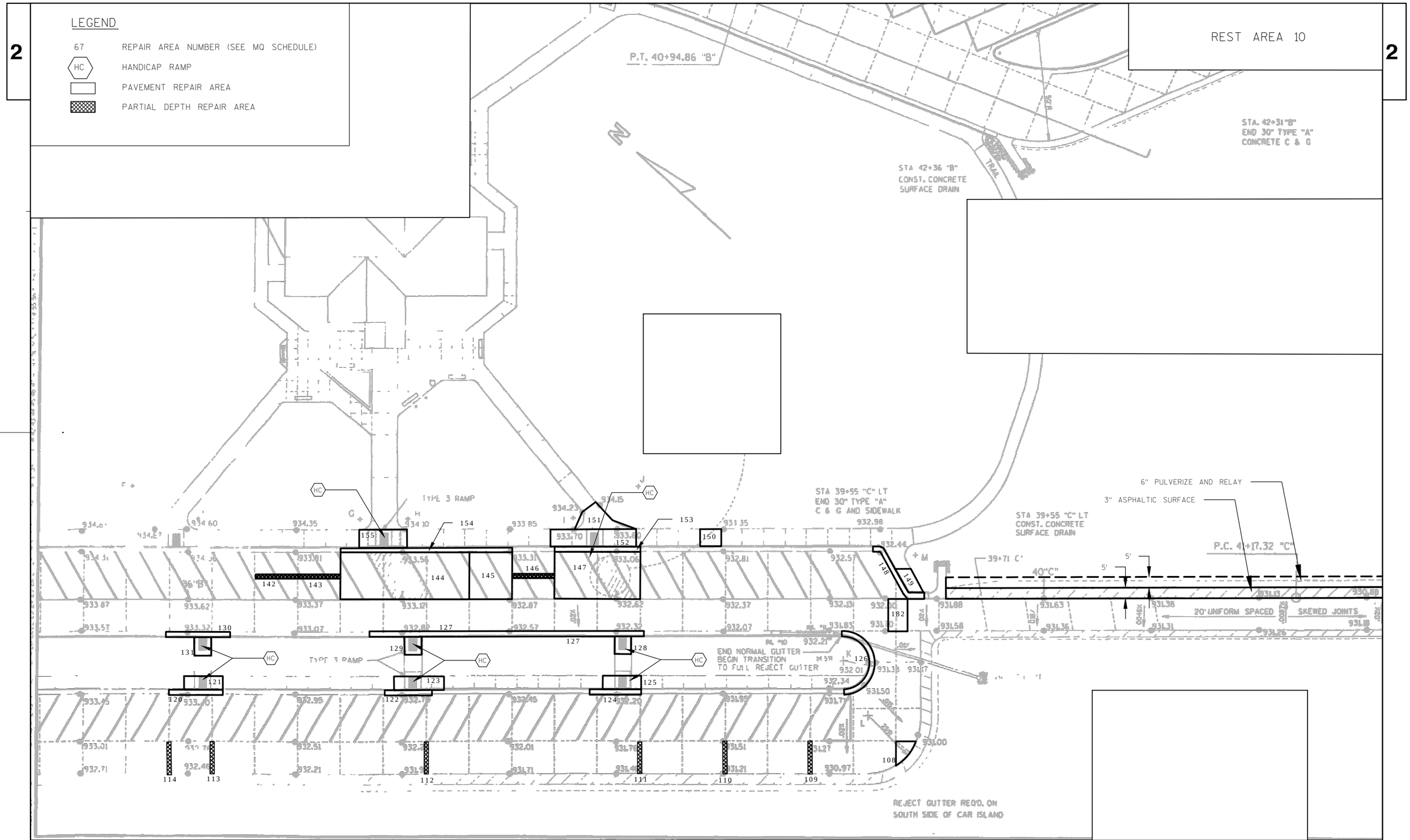

PROJECT NO: 1016-05-78	HWY: REST AREAS 9 & 10	COUNTY: JUNEAU	PLAN: PAVEMENT REPAIRS	SHEET 15	E

FILE NAME : W:\03 PAVTROAD\DOTRJS\RA9_10_26\RA 9_10\CAD\SHEETSPLAN\021214_PD.DWG PLOT DATE : 1/4/2013 8:50 AM PLOT BY : SCHMALE, RICHARD J PLOT NAME : PLOT SCALE : 1 IN:40 FT

WISDOT/CADDS SHEET 42

2

LEGEND

67	REPAIR AREA NUMBER (SEE MQ SCHEDULE)
HC	HANDICAP RAMP
	PAVEMENT REPAIR AREA
	PARTIAL DEPTH REPAIR AREA

REST AREA 10

2

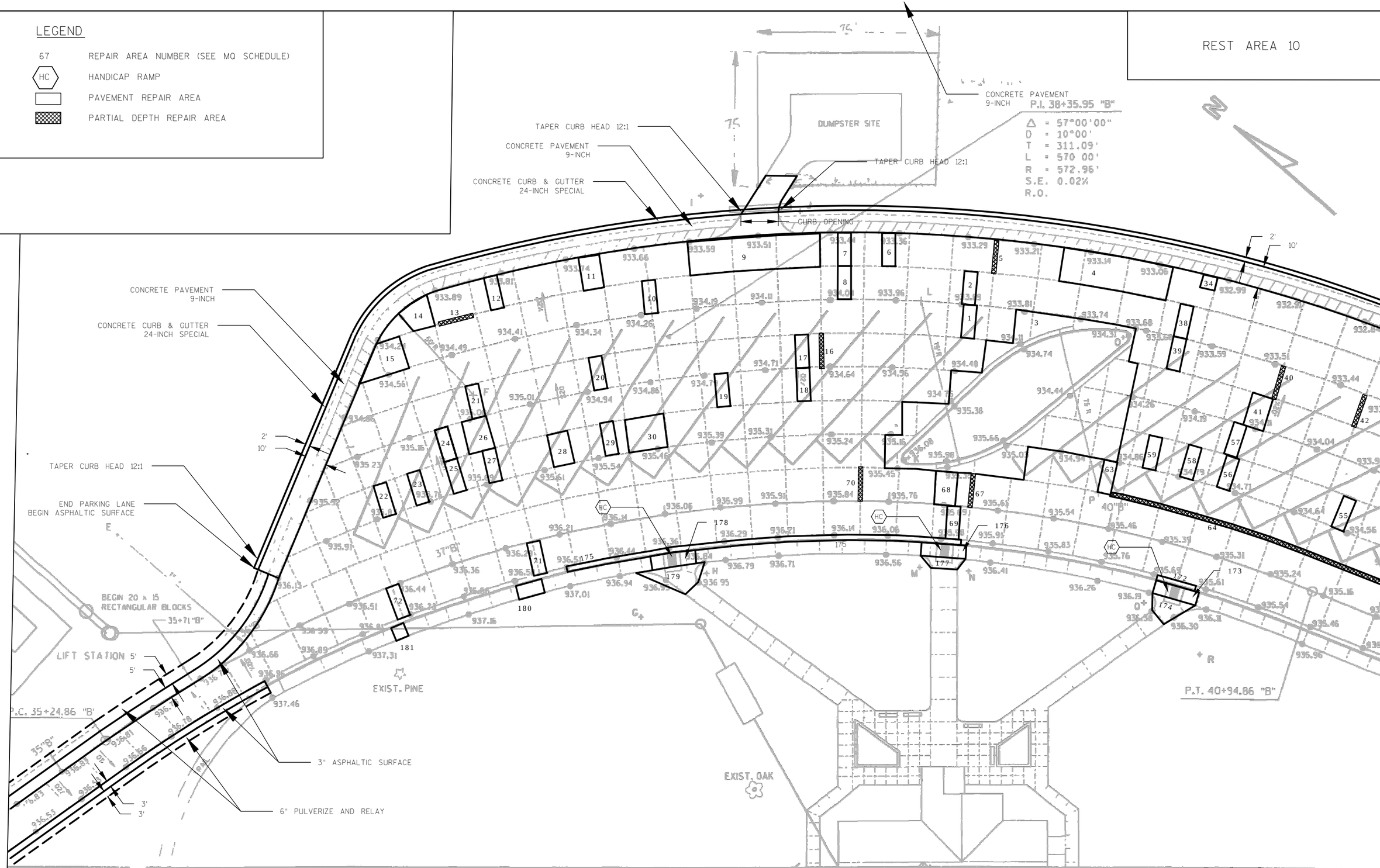

PROJECT NO: 1016-05-78	HWY: REST AREAS 9 & 10	COUNTY: JUNEAU	PLAN: PAVEMENT REPAIRS	SHEET 16	E

REST AREA 10

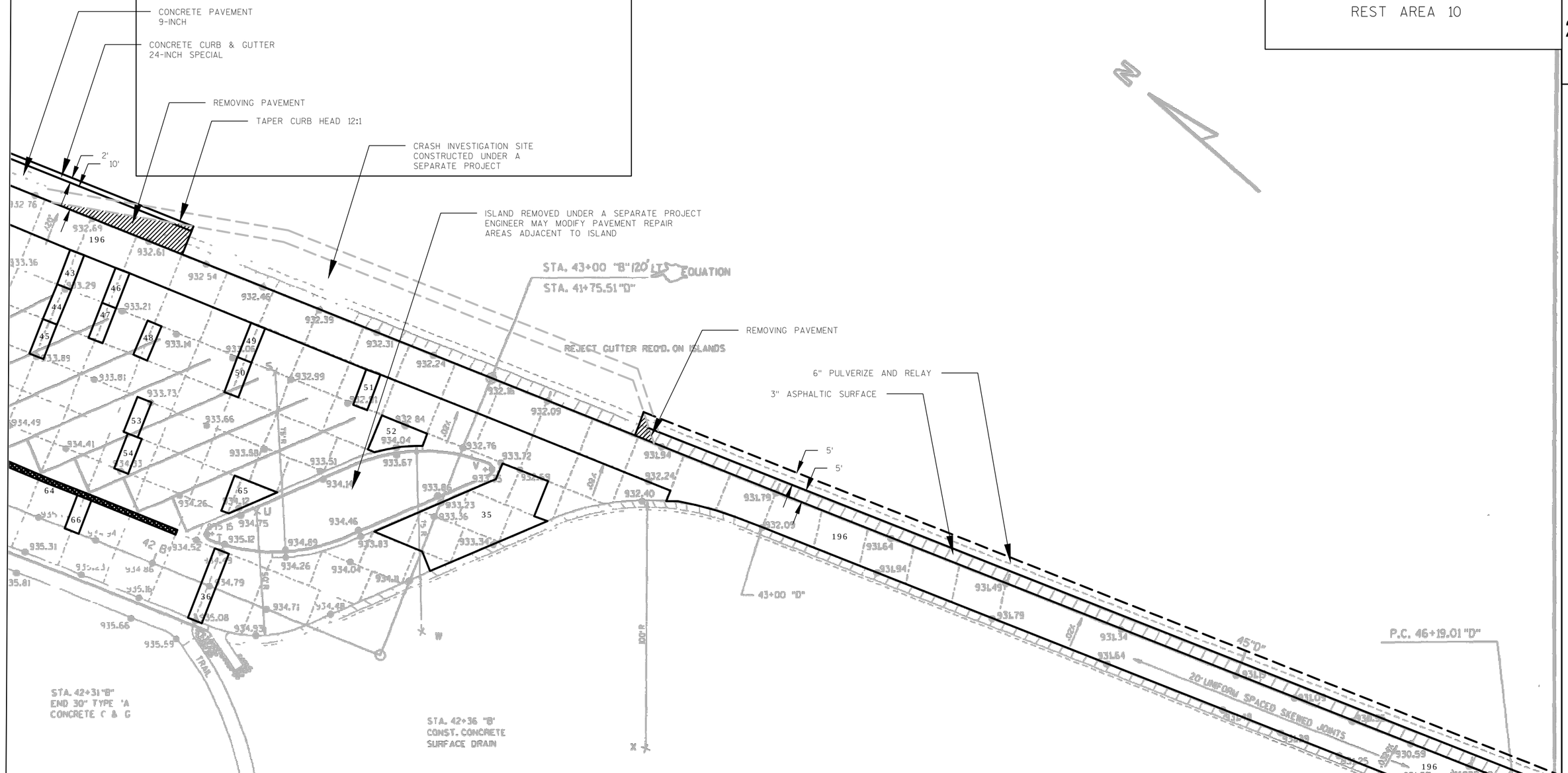

LEGEND

67	REPAIR AREA NUMBER (SEE MQ SCHEDULE)
HC	HANDICAP RAMP
	PAVEMENT REPAIR AREA
	PARTIAL DEPTH REPAIR AREA

PROJECT NO: 1016-05-78	HWY: REST AREAS 9 & 10	COUNTY: JUNEAU	PLAN: PAVEMENT REPAIRS	SHEET 17	E

LEGEND

67	REPAIR AREA NUMBER (SEE MQ SCHEDULE)
HC	HANDICAP RAMP
	PAVEMENT REPAIR AREA
	PARTIAL DEPTH REPAIR AREA

REST AREA 10

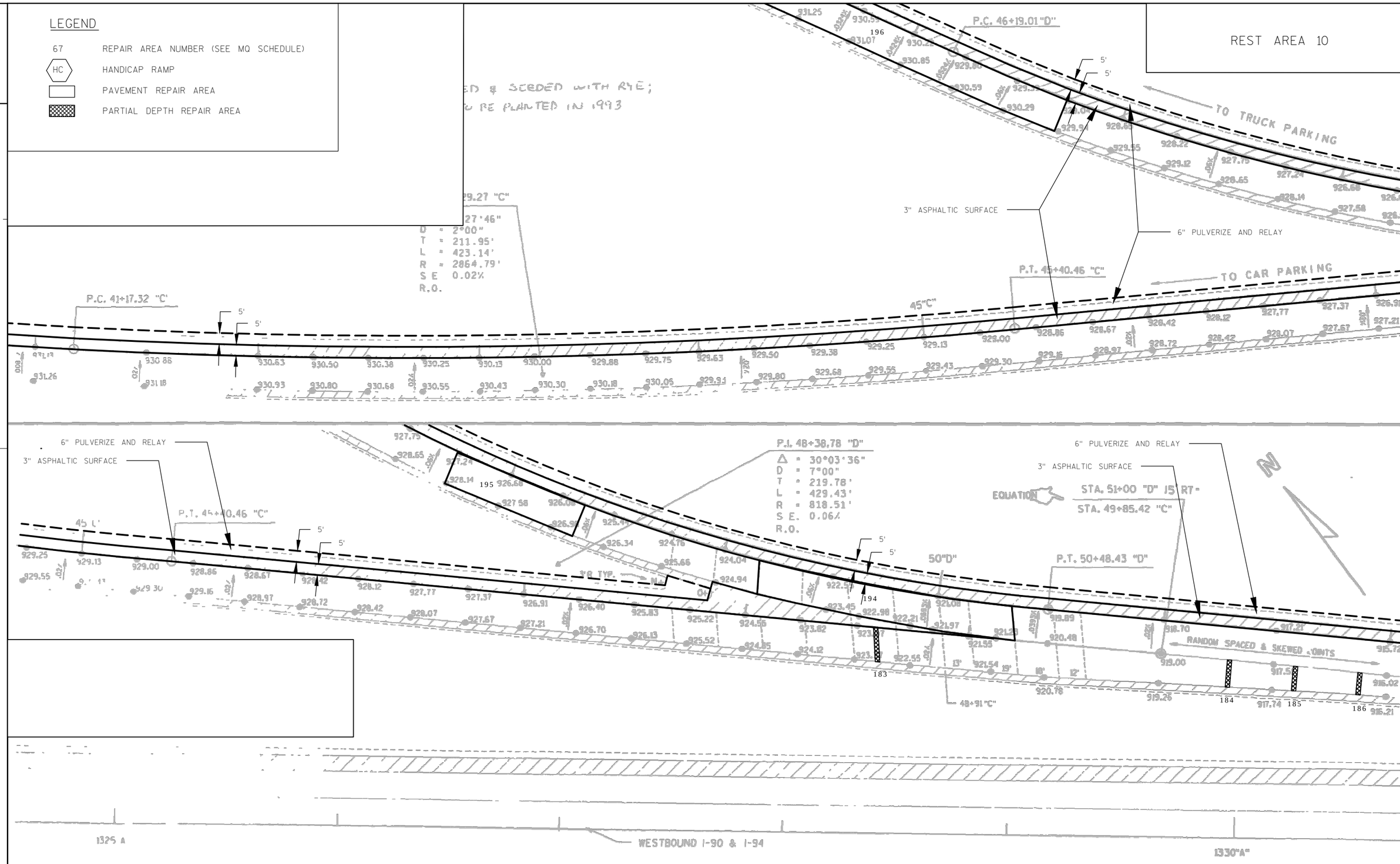

REST AREA 10

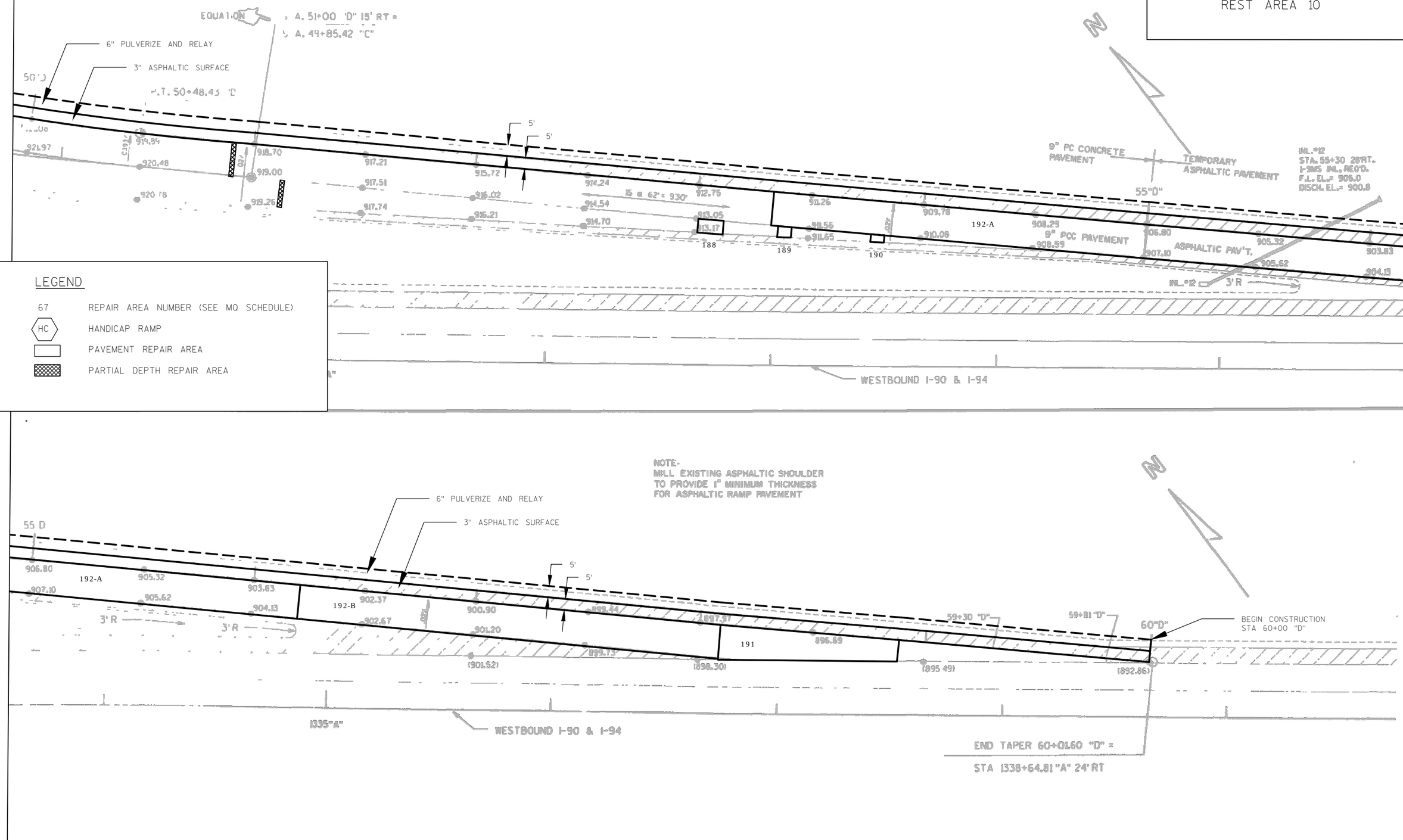

LEGEND

67	REPAIR AREA NUMBER (SEE MQ SCHEDULE)
HC	HANDICAP RAMP
	PAVEMENT REPAIR AREA
	PARTIAL DEPTH REPAIR AREA

PROJECT NO: 1016-05-78	HWY: REST AREAS 9 & 10	COUNTY: JUNEAU	PLAN: PAVEMENT REPAIRS	SHEET 19	E

FTMS STANDARD ABBREVIATIONS

CCTV	CLOSED CIRCUIT TELEVISION SITE
CB	CONTROLLER CABINET
PB	PULL BOX
V	COMMUNICATIONS VAULT
F.O.C.	FIBER OPTIC CABLE
S-F	STATE-FURNISHED
EX	EXISTING

LEGEND

PROPOSED

CCTV CAMERA AND POLE

METER BREAKER PEDESTAL

24"X36" STEEL PULL BOX

ITS CONDUIT

VEHICLE DETECTION ZONE (NON-PHYSICAL)

POLE MOUNTED FTMS CABINET

MICROWAVE DETECTOR

FTMS GENERAL NOTES

THESE PLANS AND THE ASSOCIATED SPECIAL PROVISIONS REFLECT CONDITIONS KNOWN DURING THE DEVELOPMENT OF THE PLANS AND TECHNICAL SPECIAL PROVISIONS. ALL SCALES, DIMENSIONS AND LOCATIONS SHOWN IN THESE PLANS ARE APPROXIMATE. ACTUAL PHYSICAL FIELD CONDITIONS SHALL PROVIDE THE BASIS FOR THE APPLICATION OF WORK SHOWN IN THE PLANS. THE CONTRACTOR IS FULLY RESPONSIBLE FOR THE APPLICATION OF ALL WORK SHOWN IN THE PLANS TO THE ACTUAL PHYSICAL FIELD CONDITIONS TO PROVIDE A COMPLETE AND ACCEPTED PROJECT. IN THE EVENT THAT ACTUAL PHYSICAL FIELD CONDITIONS AFFECT OR PREVENT THE APPLICATION OR PROGRESSION OF ANY WORK SHOWN IN THE PLANS OR TECHNICAL SPECIAL PROVISIONS, THE CONTRACTOR SHALL NOTIFY THE ENGINEER IMMEDIATELY, AND PRIOR TO ANY FURTHER WORK ACTIVITY. THE CONTRACTOR SHALL IMMEDIATELY NOTIFY THE ENGINEER OF ANY LOCATION CHANGES OTHER THAN MINOR ADJUSTMENTS.

BE AWARE THAT ALL EXISTING UNDERGROUND AND ABOVE GROUND STRUCTURES AND FACILITIES WITHIN THE SCOPE OF THIS PROJECT MAY NOT BE LOCATED IN THE PLANS. THE CONTRACTOR IS FULLY RESPONSIBLE FOR LOCATING AND AVOIDING ALL UNDERGROUND AND ABOVE GROUND STRUCTURES AND FACILITIES.

BE AWARE THAT NO TEST BORINGS WERE MADE WHERE CONDUITS, PULLBOXES, POLES, CABINET FOUNDATIONS, OR OTHER EQUIPMENT IS TO BE INSTALLED. THE CONTRACTOR IS FULLY RESPONSIBLE FOR EXAMINING THE JOB SITE CONDITIONS BEFORE SUBMITTING BID PROPOSALS.

NO TREES (AND/OR SHRUBS) ARE TO BE REMOVED WITHOUT APPROVAL OF THE ENGINEER.

AREAS WITHIN THE RIGHT-OF-WAY DISTURBED SPECIFICALLY FOR FTMS CONSTRUCTION ARE TO BE RESTORED TO THE ORIGINAL CONDITION WITH TOPSOIL, FERTILIZER AND SEED, AND MULCH. RESTORATION FOR AREAS DISTURBED FOR OTHER CONSTRUCTION OPERATIONS BUT ALSO CONTAINING FTMS CONSTRUCTION WILL BE DONE ACCORDING TO REQUIREMENTS AND PAYMENT PROVISIONS FOR THE OTHER CONSTRUCTION OPERATIONS. NO PAYMENT WILL BE MADE FOR RESTORING AREAS DISTURBED FOR FTMS CONSTRUCTION OPERATIONS.

THE LOCATION OF EXISTING AND PROPOSED UTILITY INSTALLATIONS SHOWN ON THE PLANS ARE APPROXIMATE. THERE MAY BE OTHER UTILITY INSTALLATIONS WITHIN THE PROJECT AREA THAT ARE NOT SHOWN.

THE CONTRACTOR IS RESPONSIBLE FOR COORDINATING RAMP, LANE, SHOULDER, AND ROADWAY CLOSURES WITH OTHER CONTRACTS IN THE AREA.

CONTACT THE WISDOT STATEWIDE TRAFFIC OPERATIONS CENTER AT (414) 227-2166 FIVE (5) WORKING DAYS PRIOR TO ENTERING ANY EXISTING WISDOT FTMS OR ITS CABINET.

HAND DIG TRENCHES CROSSING EXISTING CONDUIT CONTAINING FIBER OPTIC CABLE.

VISUALLY VERIFY DEPTHS OF EXISTING CONDUITS CONTAINING FIBER OPTIC CABLE PRIOR TO CROSSING BY DIRECTIONAL BORE OR SPECIAL METHOD.

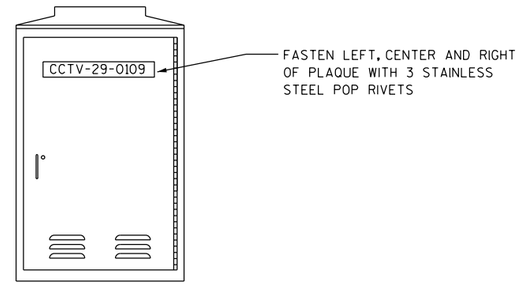

CONTROL CABINET IDENTIFICATION PLAQUE REQUIREMENTS AND PLACEMENTS

(TYPICAL ALL CONTROL CABINETS)

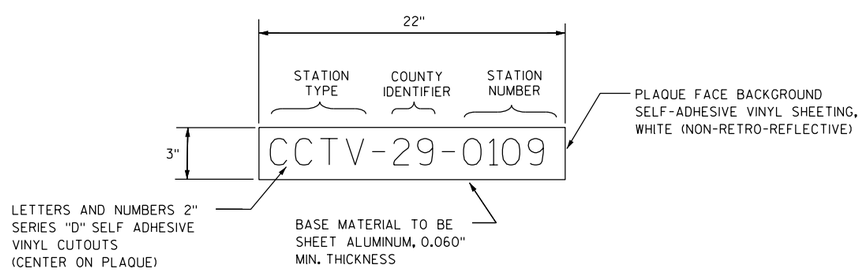

CONTROL CABINET IDENTIFICATION PLAQUE DETAIL

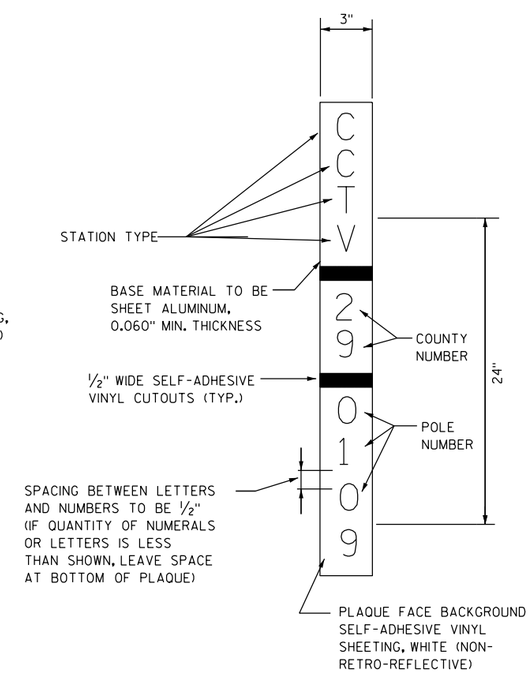

POLE IDENTIFICATION PLAQUE DETAIL

LEGEND STATION TYPE

RM - RAMP METER
CCTV - CLOSED CIRCUIT TELEVISION
ATR - AUTOMATIC TRAFFIC RECORDER
SDS - SYSTEM DETECTOR STATION
MD - MICROWAVE DETECTOR

NOTES

1) TWO PLAQUES PER CABINET REQUIRED ON CONTROL CABINET.
2) FASTEN ONE PLAQUE ON FRONT DOOR, UPPER HALF.
3) FASTEN ONE PLAQUE ON SIDE FACING LOCAL STREET. IF NO LOCAL STREET NEARBY, OR IF SUCH LOCATION COINCIDES WITH LOCATION OF PLAQUE IN NOTE 2, FASTEN PLAQUE ON REAR OF CABINET, UPPER HALF.
4) COUNTY NUMBER NOT REQUIRED ON RAMP METER CABINETS.

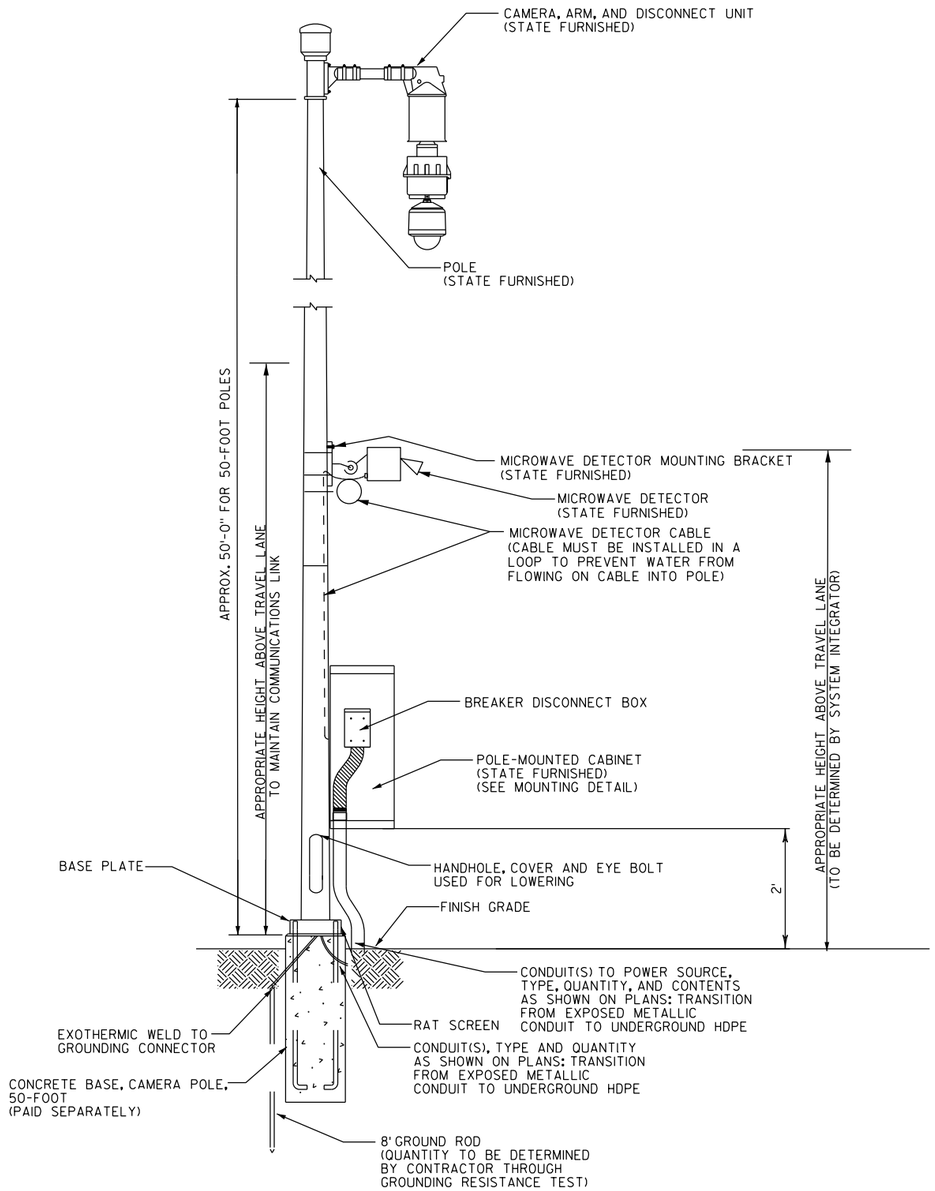

CAMERA POLE WITH CAMERA LOWERING HARDWARE

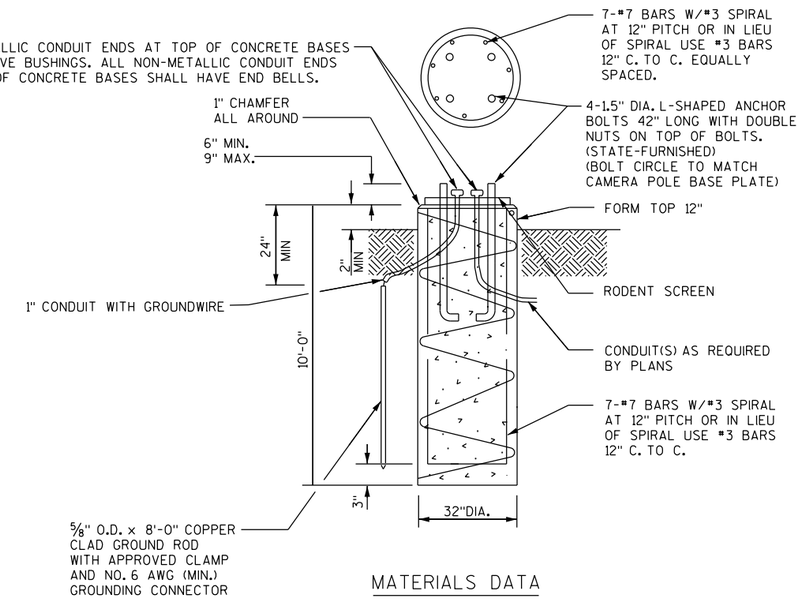

MATERIALS DATA

CONCRETE	f'c=3,500 psi
HIGH STRENGTH BAR STEEL REINFORCEMENT	fy = 60,000 psi

CONCRETE BASE, 50' CAMERA POLE

NOT TO SCALE

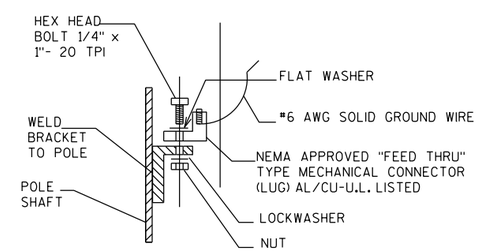

FIELD INSTALLED GROUNDING LUG

NOTES

1) ALL HARDWARE AND FASTENERS SHALL BE STAINLESS STEEL
2) POLE DRAWINGS SHOWN FOR BIDDING INFORMATION PURPOSES ONLY. POLES WILL BE STATE FURNISHED. BASE TO BE CONTRACTOR DESIGNED.
3) CONTRACTOR SHALL CONFIRM BOLT PATTERN OF CAMERA POLE PRIOR TO CONSTRUCTION OF CONCRETE BASE.
4) CONTRACTOR SHALL INSTALL GROUNDING LUG AS SHOWN

CAMERA POLES & FOUNDATIONS

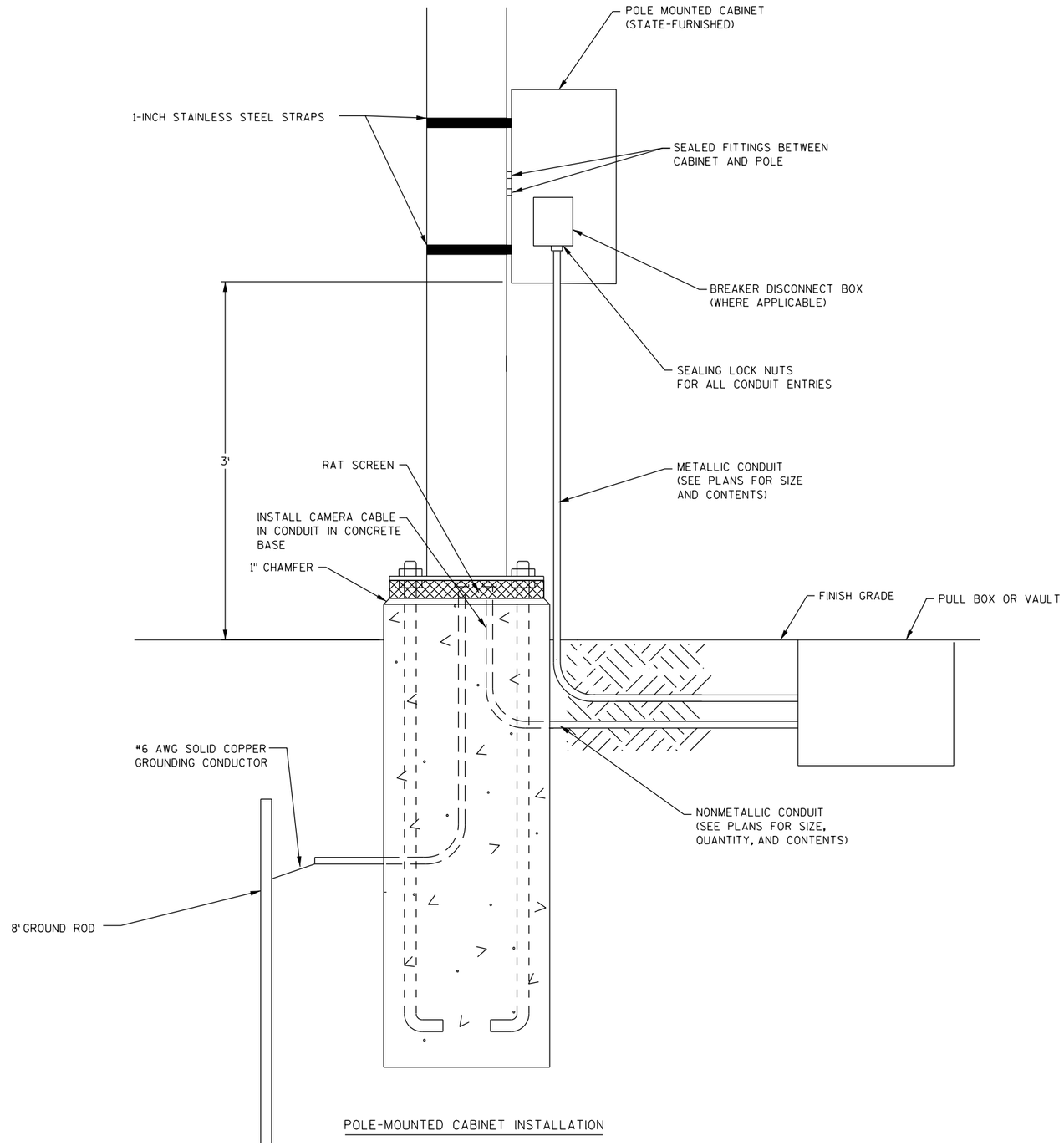

POLE-MOUNTED CABINET INSTALLATION

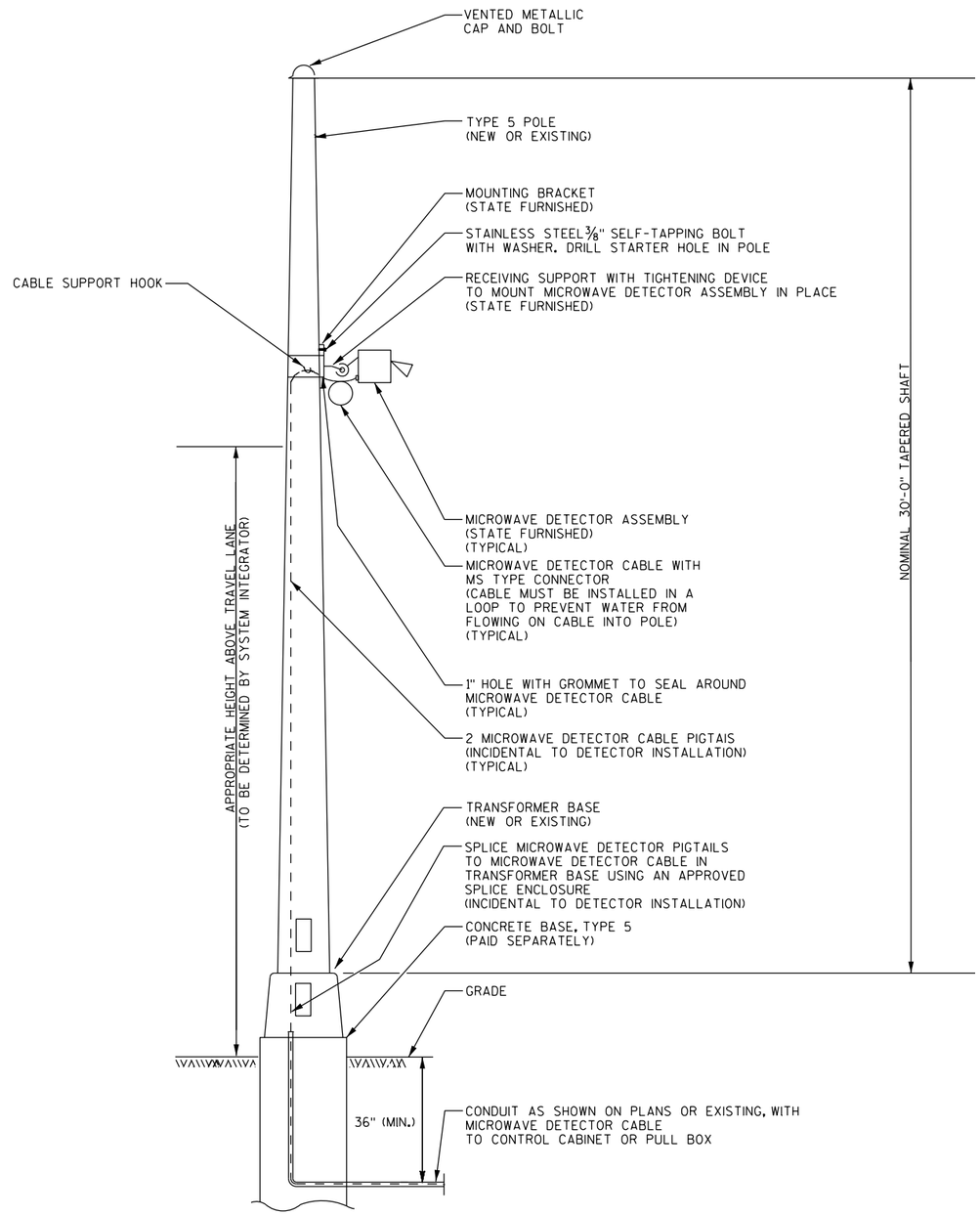

MICROWAVE DETECTOR INSTALLATION
ON TYPE 5 POLE

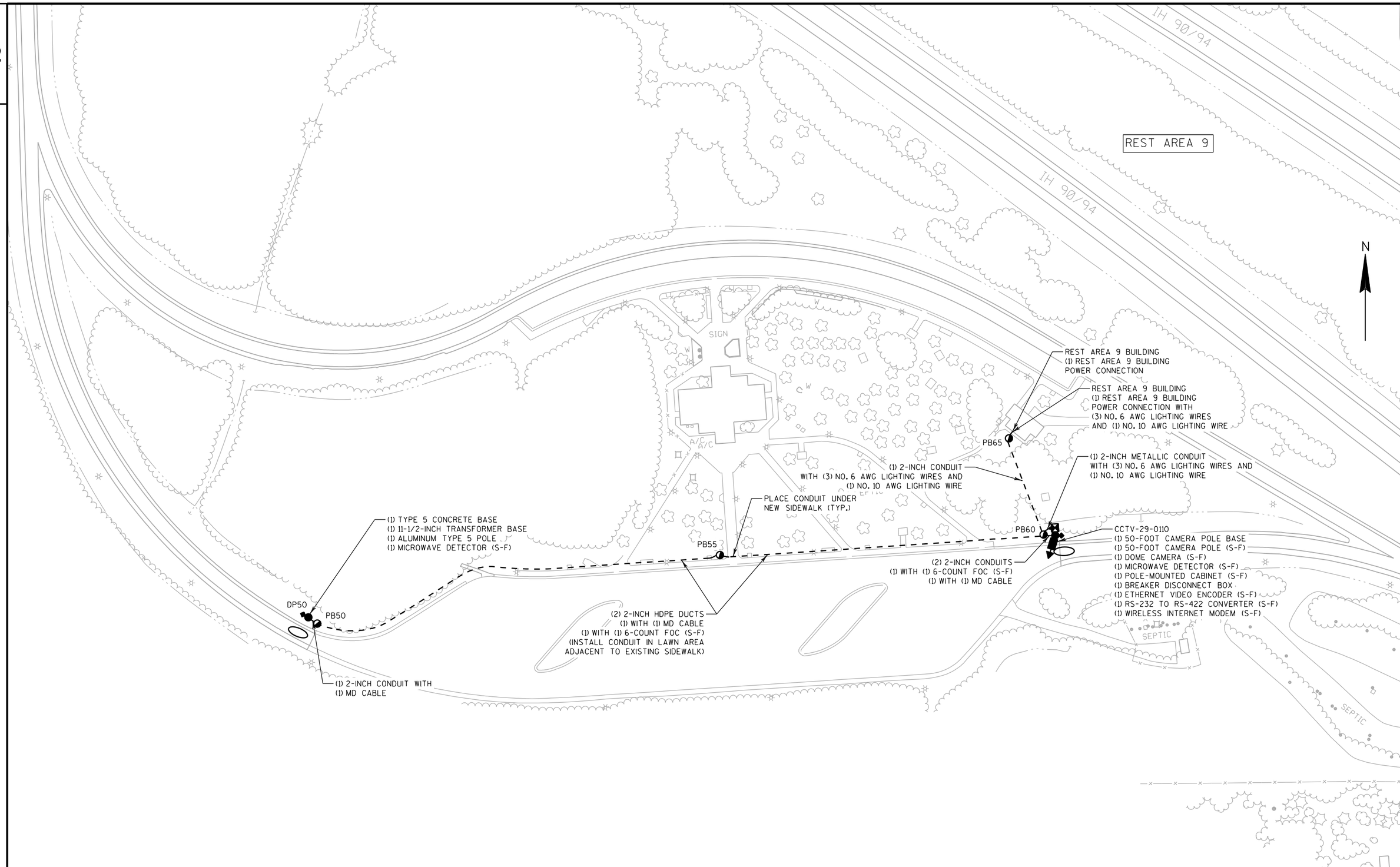

PROJECT NO:1016-05-78	HWY:IH 90/94	COUNTY:JUNEAU	FTMS DESIGN	SHEET 25	E

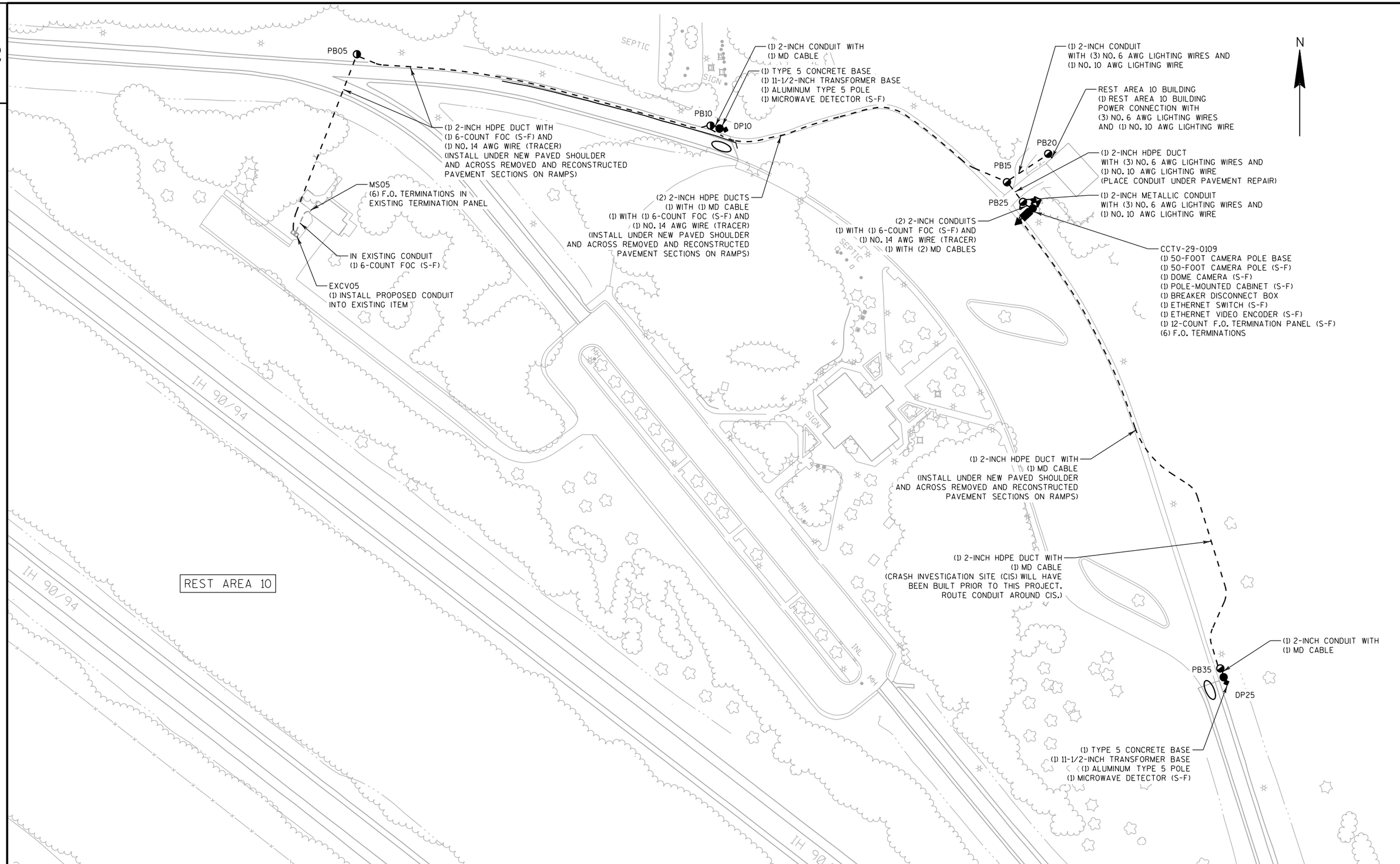

PROJECT NO:1016-05-78	HWY:IH 90/94	COUNTY:JUNEAU	FTMS DESIGN	SHEET 26	E

REST AREA 9

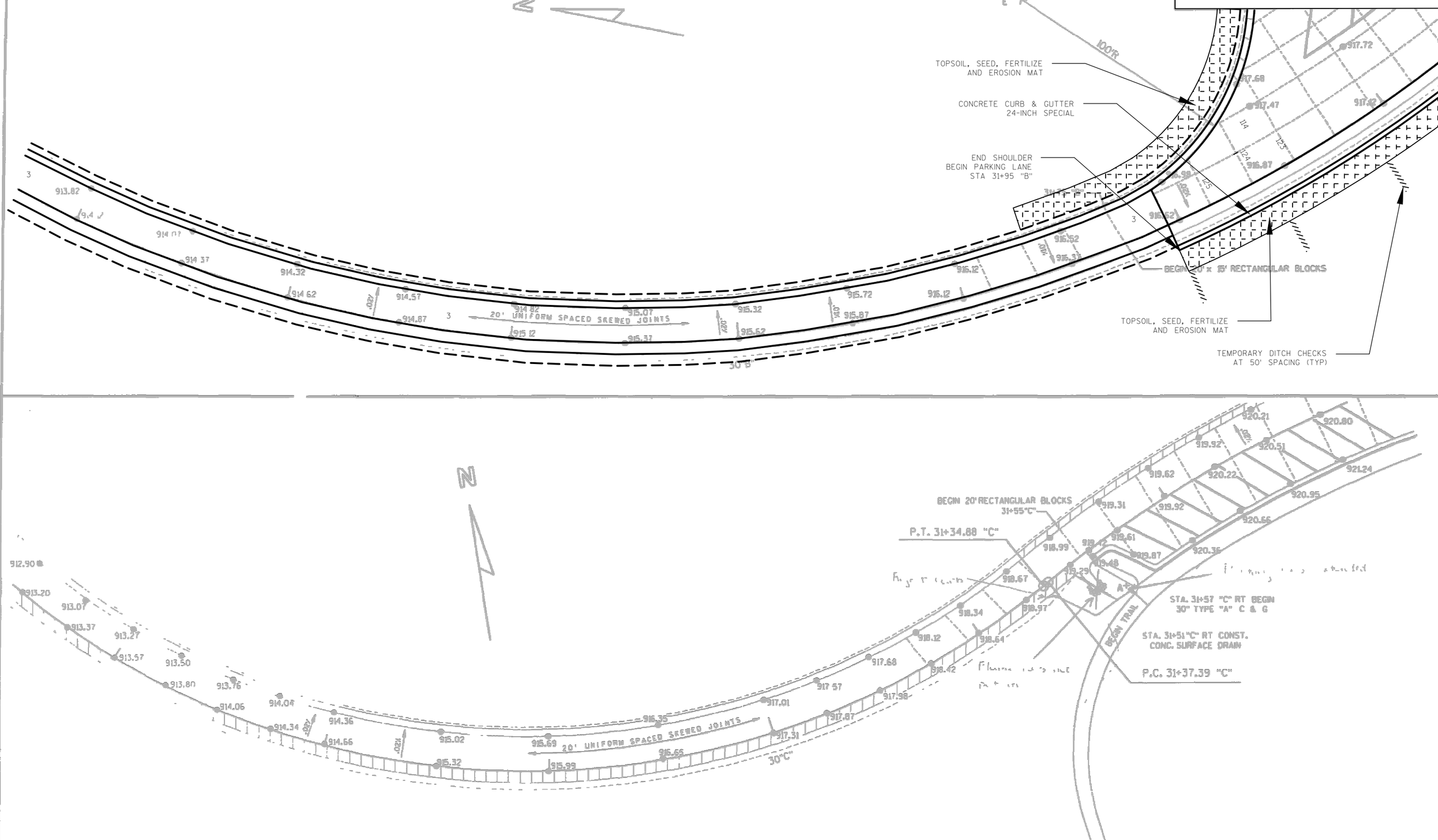
N
E
100'R
TOPSOIL, SEED, FERTILIZE AND EROSION MAT
CONCRETE CURB & GUTTER 24-INCH SPECIAL
END SHOULDER BEGIN PARKING LANE STA 31+95 "B"
BEGIN 20' x 15' RECTANGULAR BLOCKS
TOPSOIL, SEED, FERTILIZE AND EROSION MAT
TEMPORARY DITCH CHECKS AT 50' SPACING (TYP)
20' UNIFORM SPACED SKEWED JOINTS
30"B"
N
BEGIN 20' RECTANGULAR BLOCKS 31+55"C"
P.T. 31+34.88 "C"
STA. 31+57 "C" RT BEGIN 30" TYPE "A" C & G
STA. 31+51 "C" RT CONST. CONC. SURFACE DRAIN
P.C. 31+37.39 "C"
BEGIN TRAIL
20' UNIFORM SPACED SKEWED JOINTS
30"C"

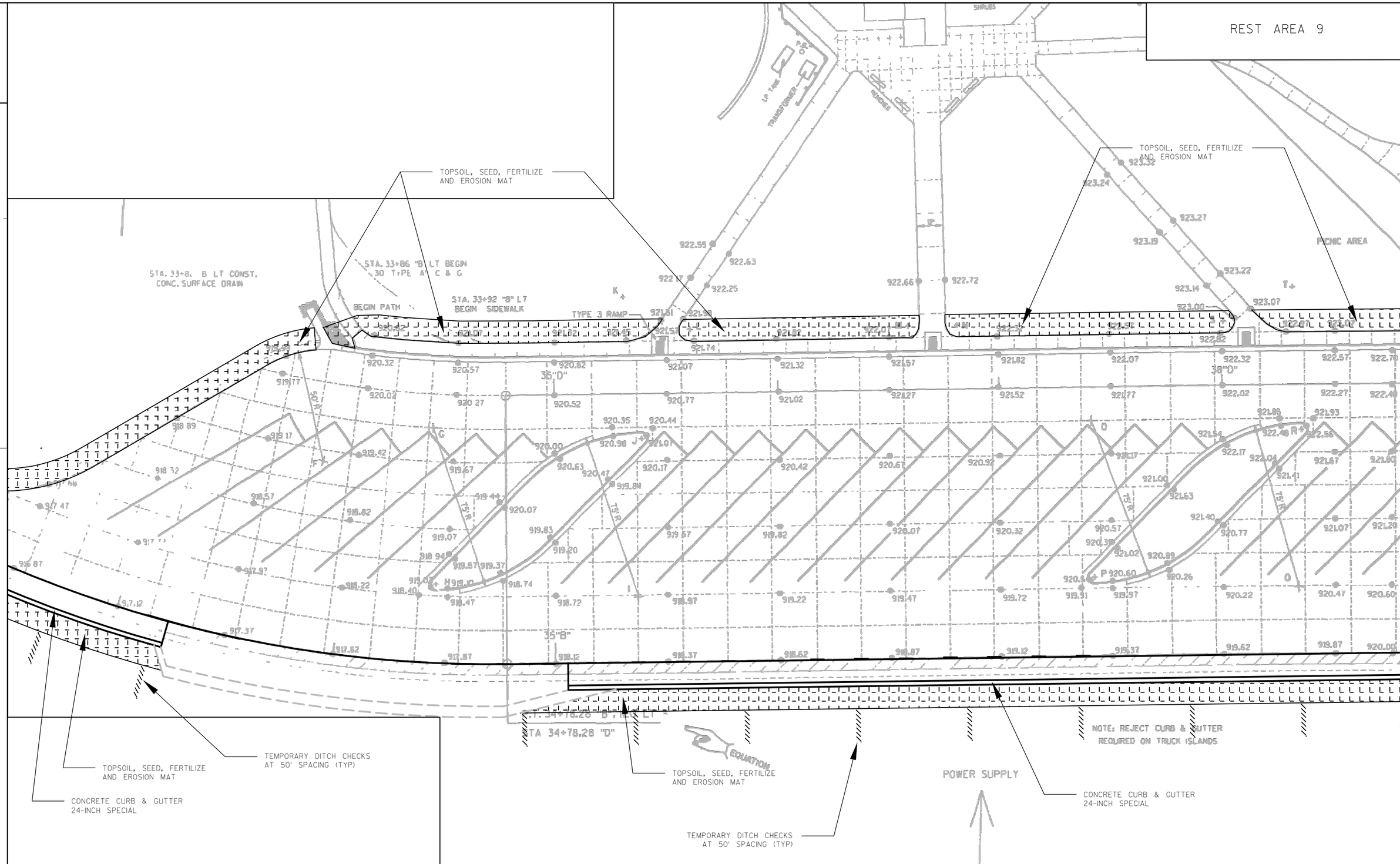

PROJECT NO: 1016-05-78	HWY: REST AREAS 9 & 10	COUNTY: JUNEAU	PLAN: EROSION CONTROL	SHEET 28	E

REST AREA 9

NOTE-
SEE TABLE FOR ALIGNMENT AND ELEVATIONS OF TEMPORARY PAVEMENT

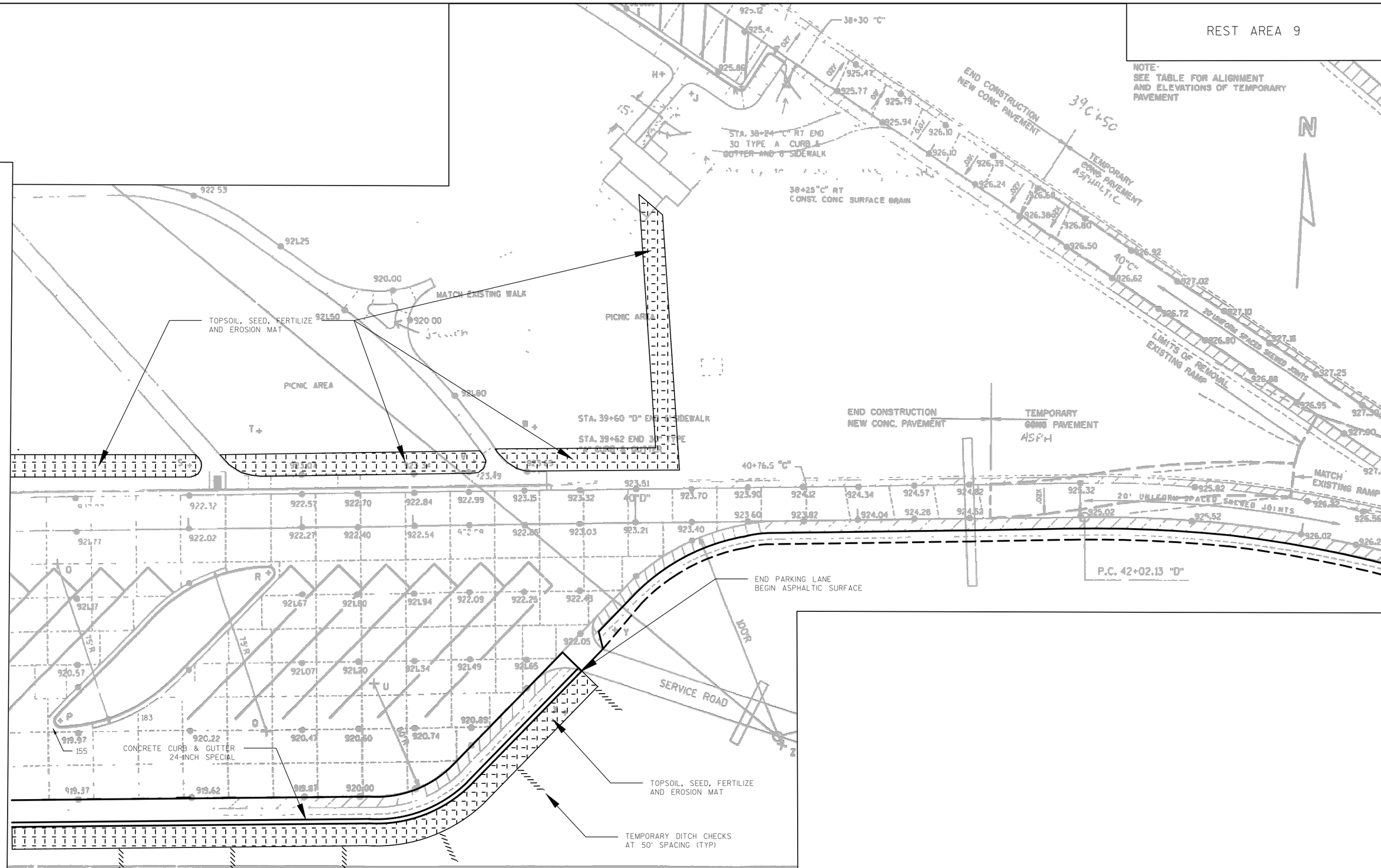

PROJECT NO:1016-05-78	HWY:REST AREAS 9 & 10	COUNTY:JUNEAU	PLAN: EROSION CONTROL	SHEET 29	E

REST AREA 10

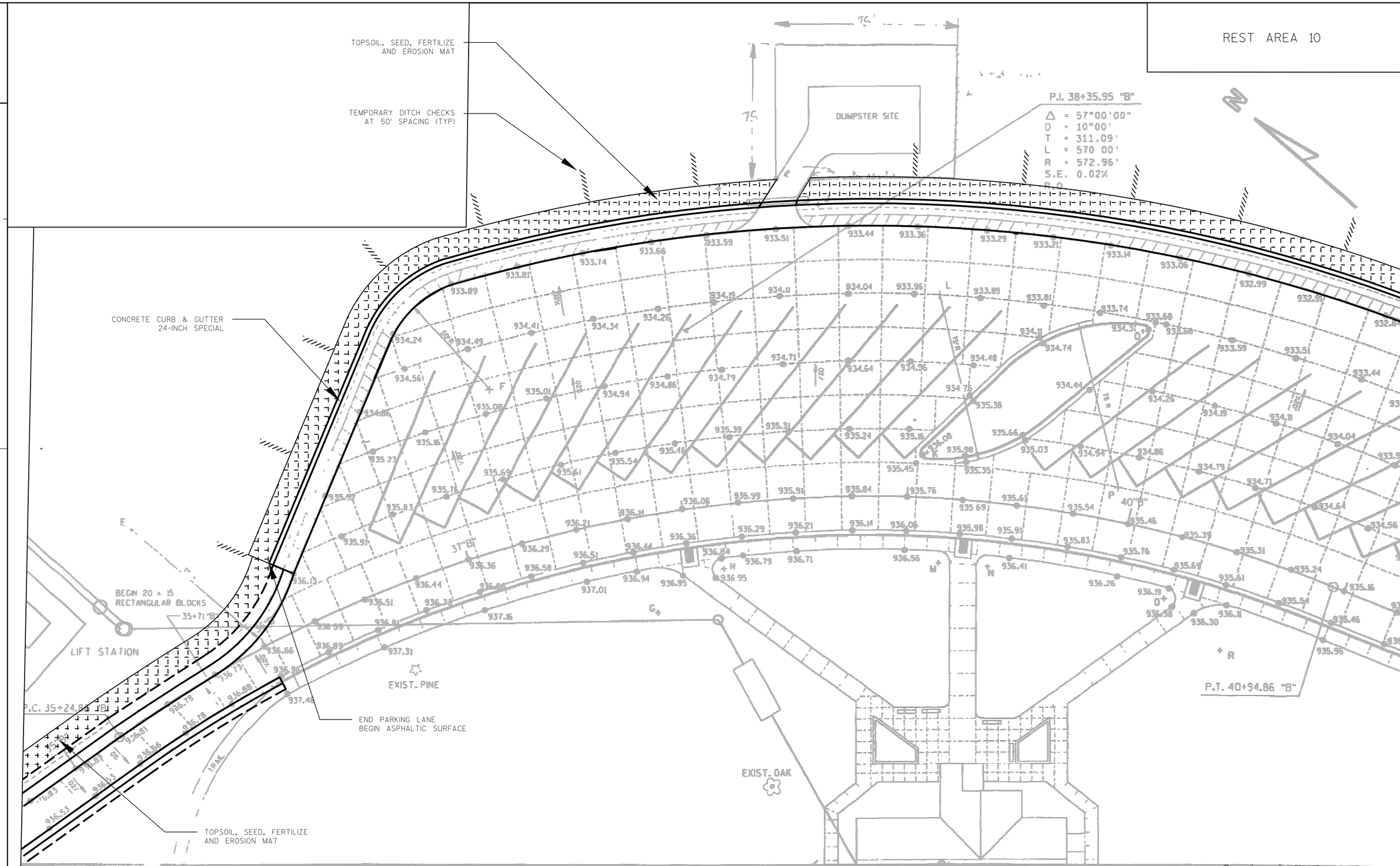
TOPSOIL, SEED, FERTILIZE AND EROSION MAT
TEMPORARY DITCH CHECKS AT 50' SPACING (TYP)
CONCRETE CURB & GUTTER 24-INCH SPECIAL
DUMPSTER SITE
P.I. 38+35.95 "B"
Δ = 57°00'00"
D = 10°00'
T = 311.09'
L = 570.00'
R = 572.96'
S.E. 0.02%
BEGIN 20 x 15 RECTANGULAR BLOCKS
35+71 "B"
LIFT STATION
EXIST. PINE
EXIST. OAK
P.C. 35+24.84 "B"
P.T. 40+94.86 "B"
END PARKING LANE BEGIN ASPHALTIC SURFACE
TOPSOIL, SEED, FERTILIZE AND EROSION MAT

REST AREA 10

2

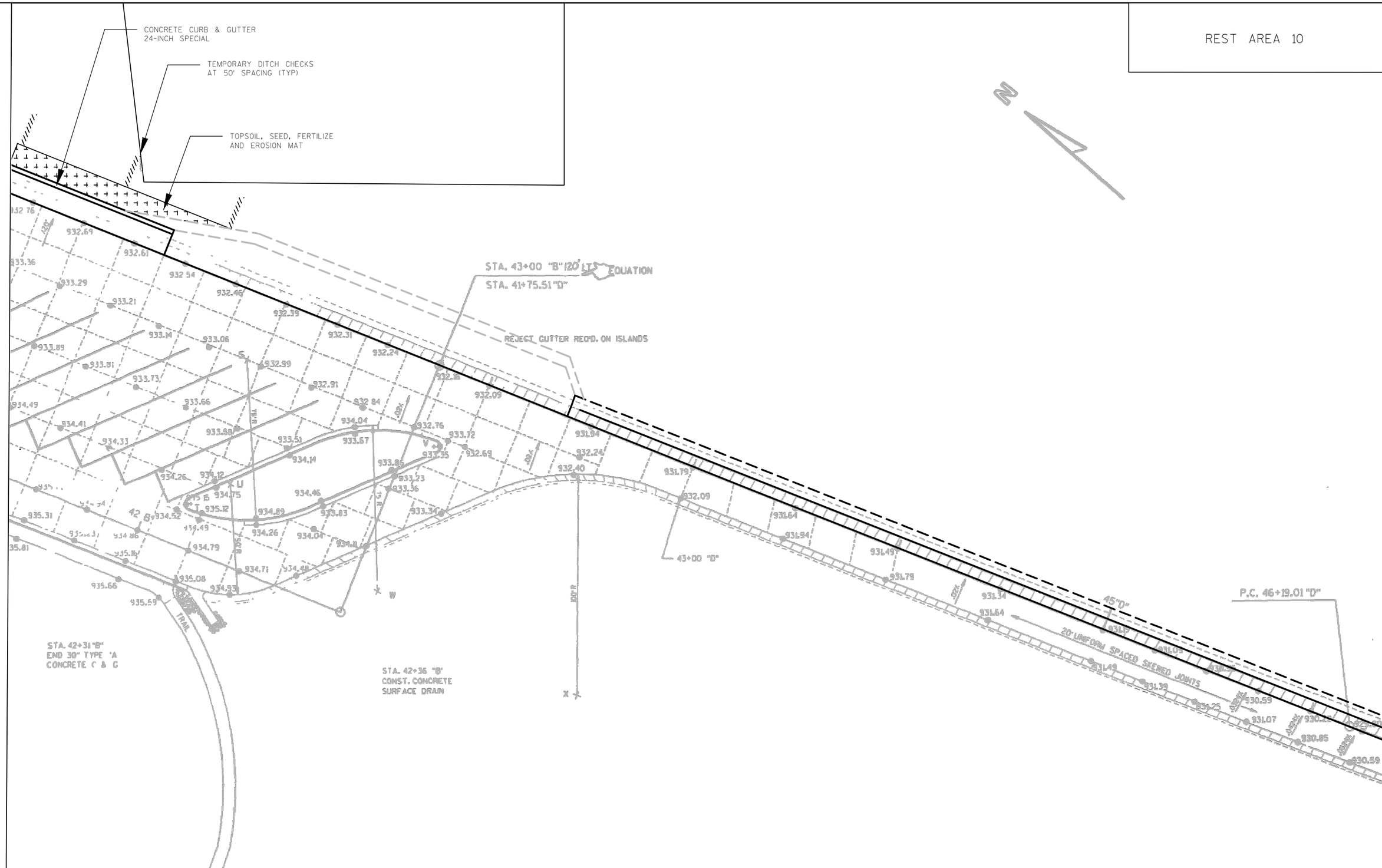

PROJECT NO: 1016-05-78	HWY: REST AREAS 9 & 10	COUNTY: JUNEAU	PLAN: EROSION CONTROL	SHEET 31	E

2

REST AREA 10

2

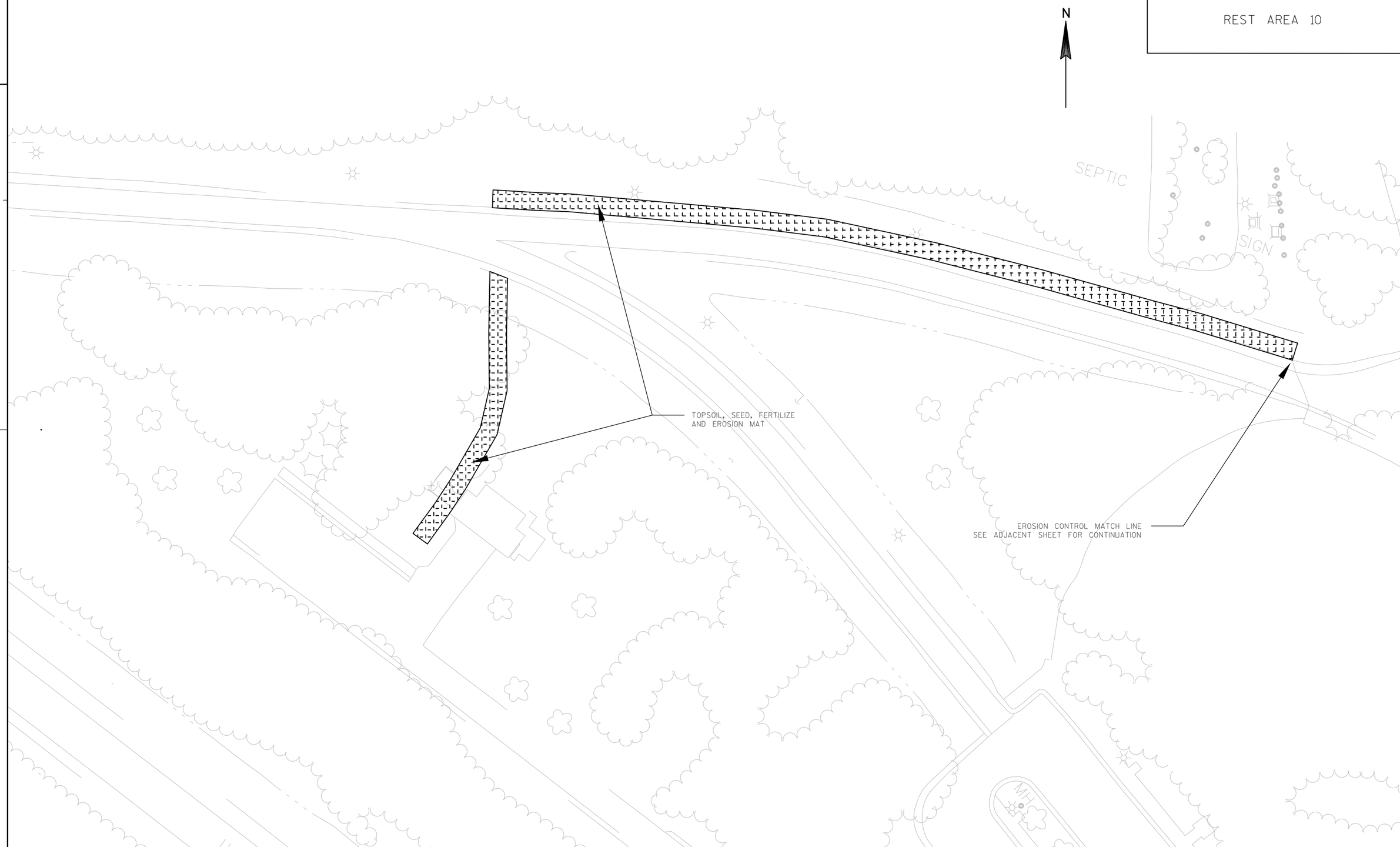

PROJECT NO:1016-05-78	HWY:REST AREAS 9 & 10	COUNTY:JUNEAU	PLAN: EROSION CONTROL	SHEET 32	E

FILE NAME : W:\03 PAVTROAD\DOTRJS\RA9_10_26\RA 9_10\CAD\SHEETSPLAN\022006_EC.DWG PLOT DATE : 1/4/2013 8:53 AM PLOT BY : SCHMALE, RICHARD J PLOT NAME : PLOT SCALE : 1 IN:50 FT

WISDOT/CADDS SHEET 42

2

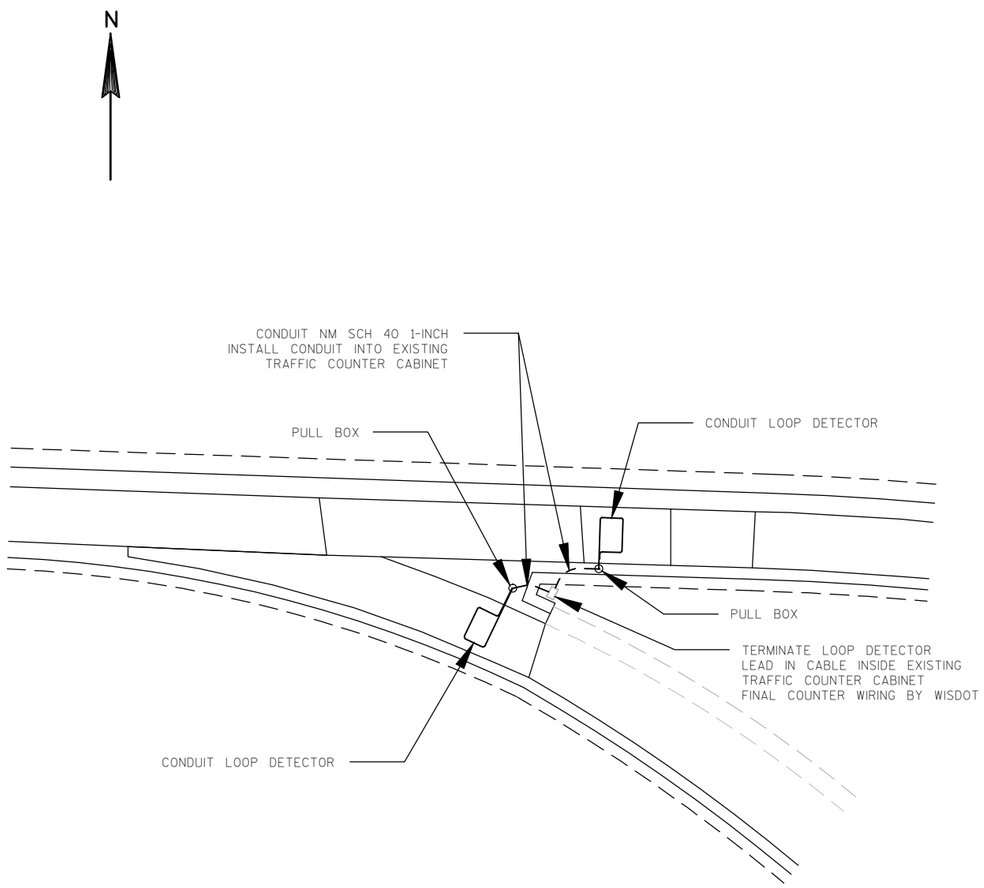

REST AREA 10
TRAFFIC COUNTER IMPROVEMENTS

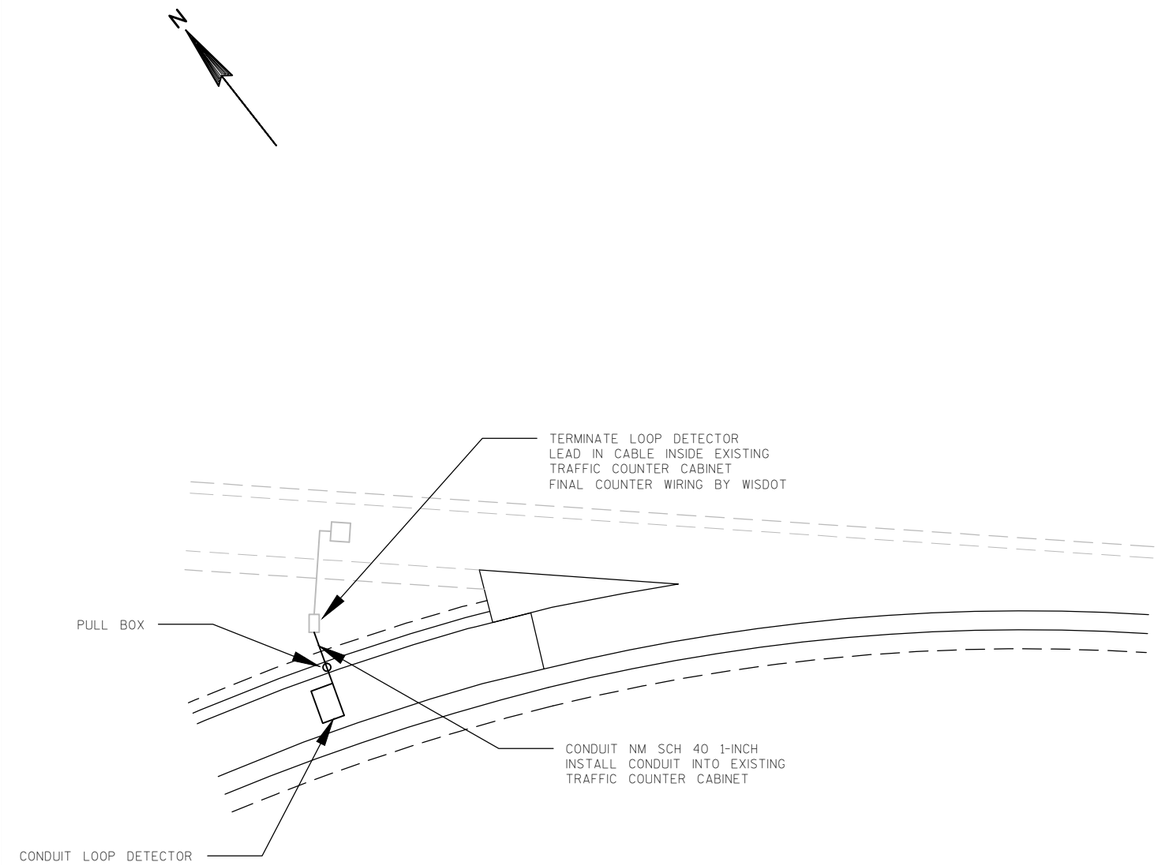

REST AREA 9
TRAFFIC COUNTER IMPROVEMENTS

2

PROJECT NO:1016-05-78	HWY:REST AREAS 9 & 10	COUNTY:JUNEAU	PLAN: TRAFFIC COUNTER IMPROVEMENTS	SHEET 33	E

REST AREA 9

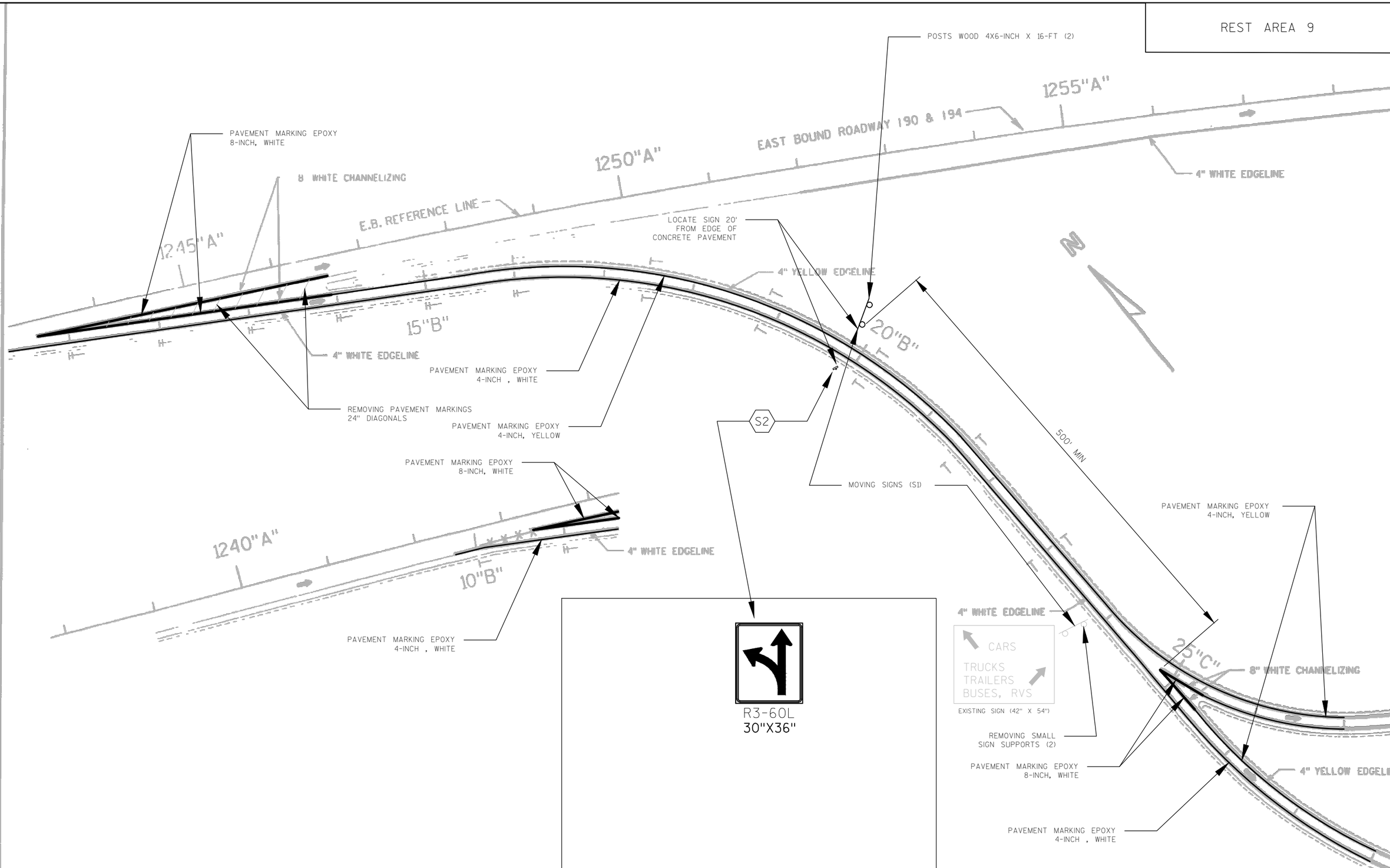

PROJECT NO:1016-05-78	HWY:REST AREAS 9 & 10	COUNTY:JUNEAU	PLAN: PAVEMENT MARKING	SHEET 34	E

REST AREA 9

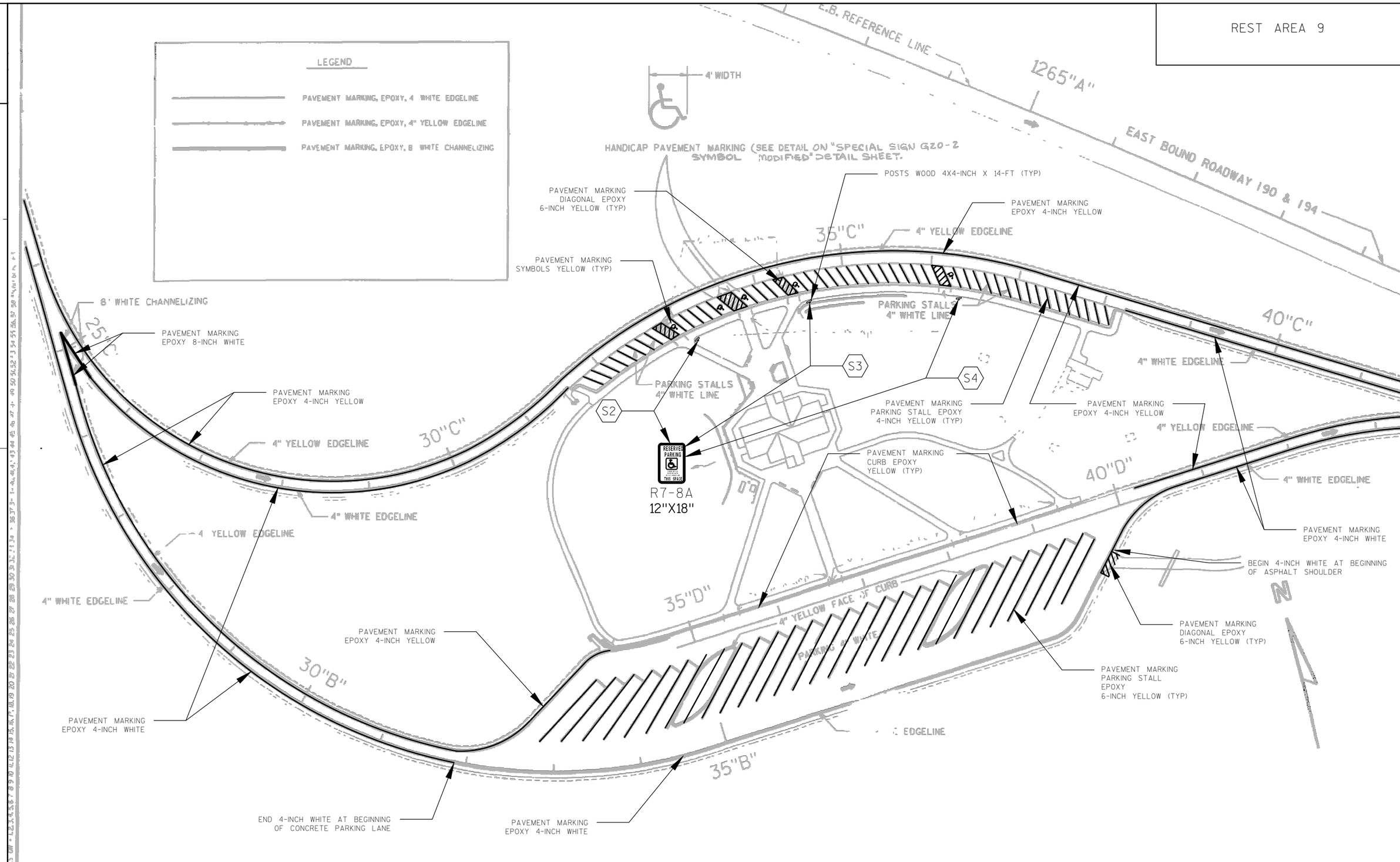

PROJECT NO:1016-05-78	HWY: REST AREAS 9 & 10	COUNTY: JUNEAU	PLAN: PAVEMENT MARKING	SHEET 35	E

REST AREA 9

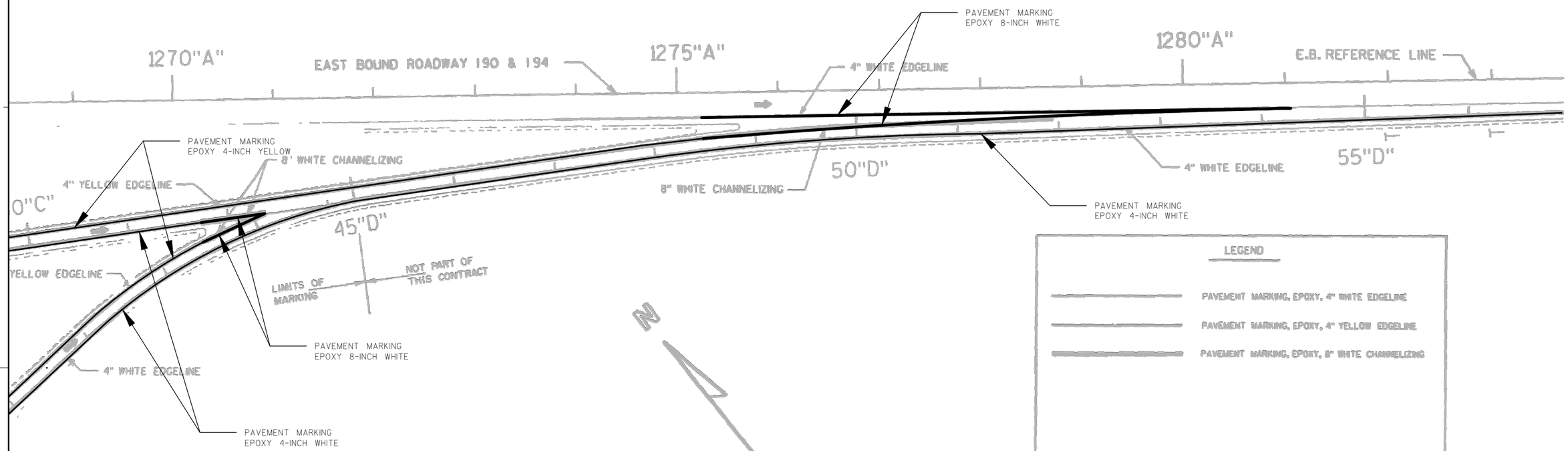

PROJECT NO:1016-05-78	HWY:REST AREAS 9 & 10	COUNTY:JUNEAU	PLAN: PAVEMENT MARKING	SHEET 36	E

REST AREA 10

2

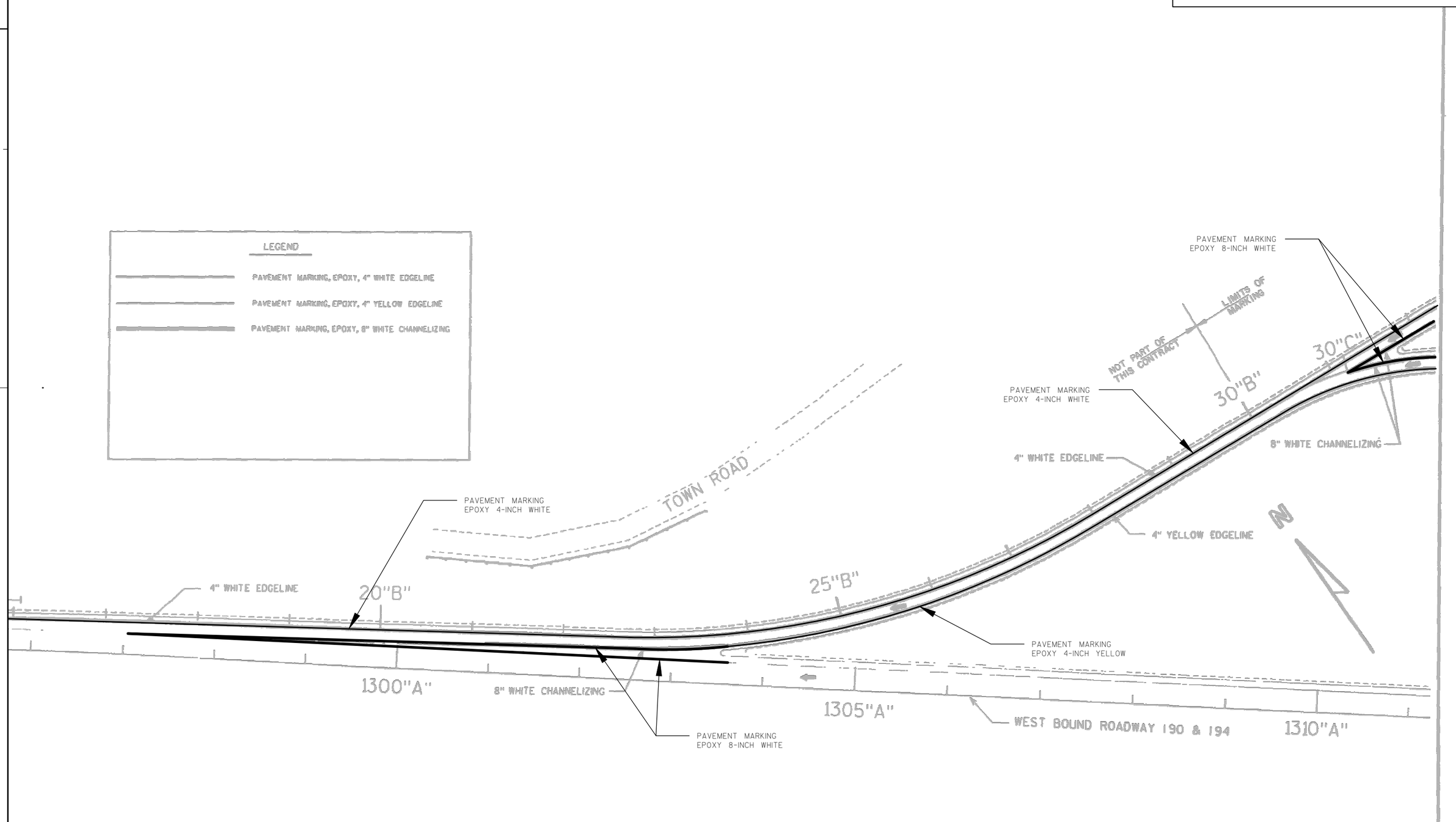

PROJECT NO: 1016-05-78	HWY: REST AREAS 9 & 10	COUNTY: JUNEAU	PLAN: PAVEMENT MARKING	SHEET 37	E

FILE NAME : W:\03 PAVTROAD\DOTRJS\RA9_10_26\RA 9_10\CAD\SHEETSPLAN\024511_PM.DWG PLOT DATE : 1/4/2013 8:57 AM PLOT BY : SCHMALE, RICHARD J PLOT NAME : PLOT SCALE : 1 IN:100 FT

REST AREA 10

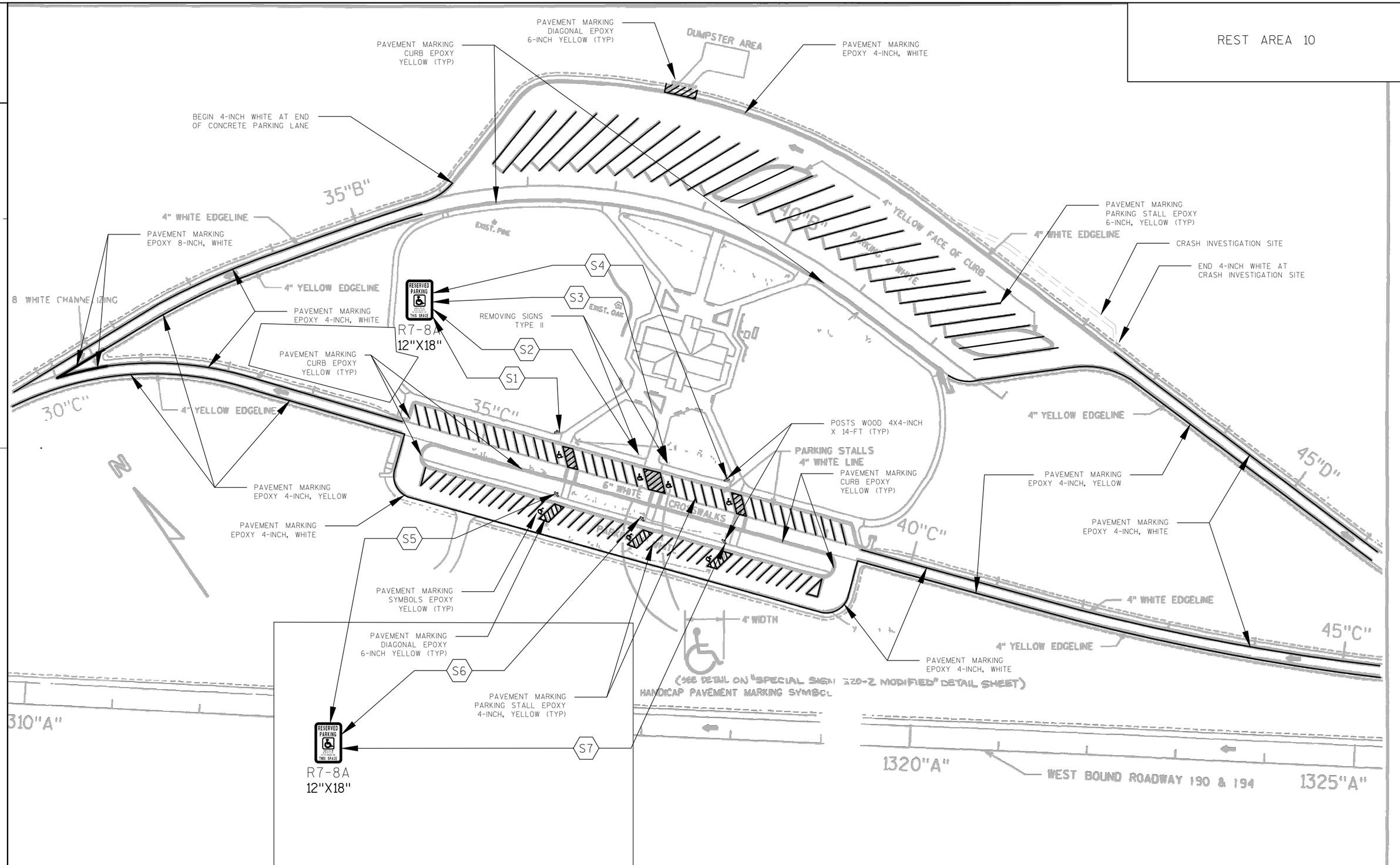

PROJECT NO:1016-05-78	HWY: REST AREAS 9 & 10	COUNTY: JUNEAU	PLAN: PAVEMENT MARKING	SHEET 38	E

REST AREA 10

2

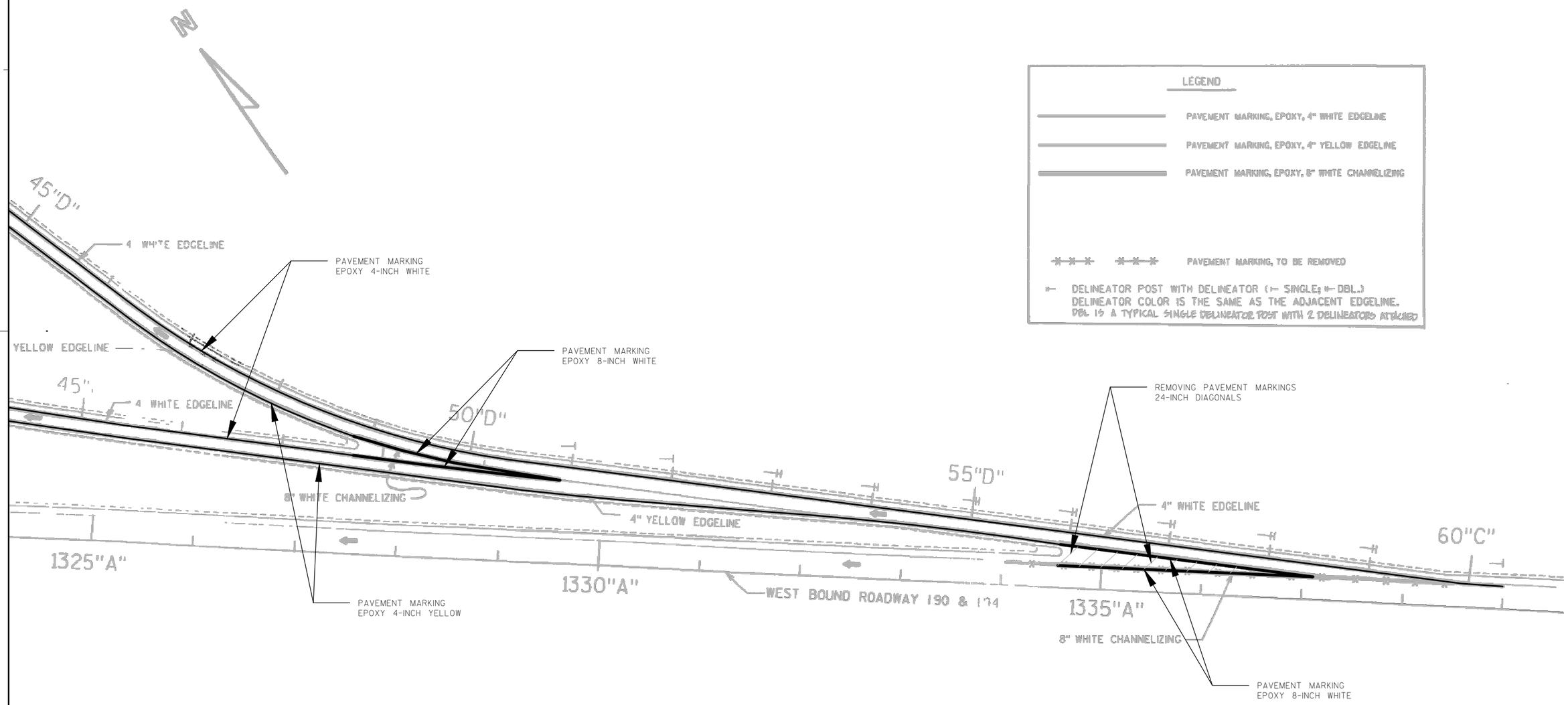

PROJECT NO:1016-05-78	HWY: REST AREAS 9 & 10	COUNTY: JUNEAU	PLAN: PAVEMENT MARKING	SHEET 39	E

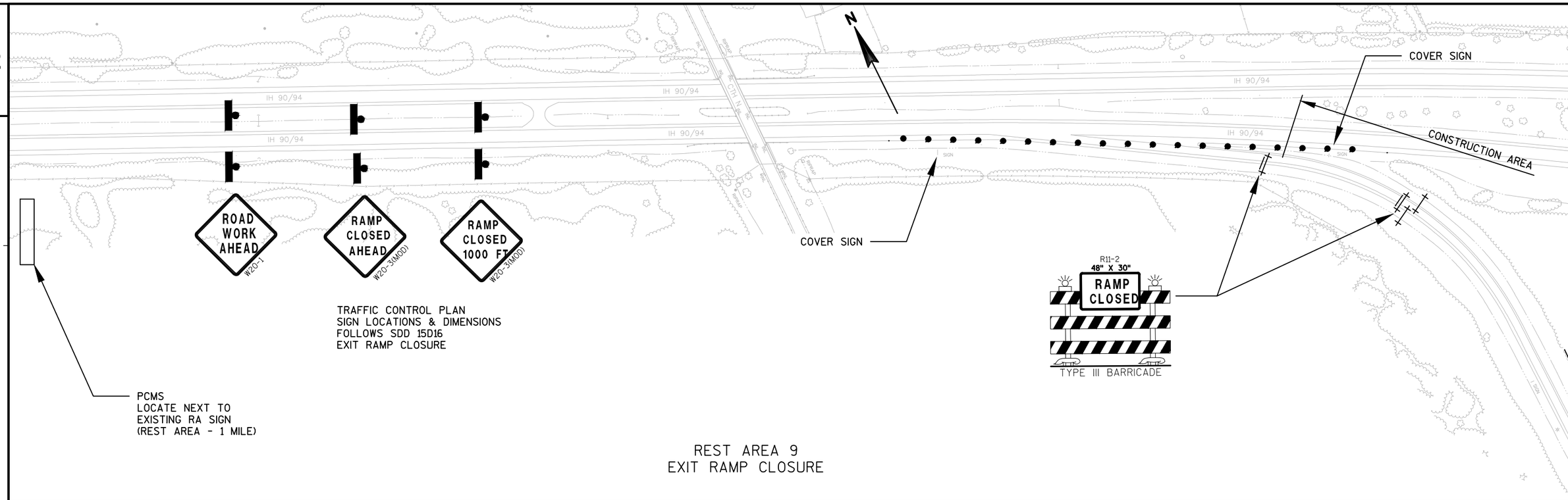

REST AREA 9
EXIT RAMP CLOSURE

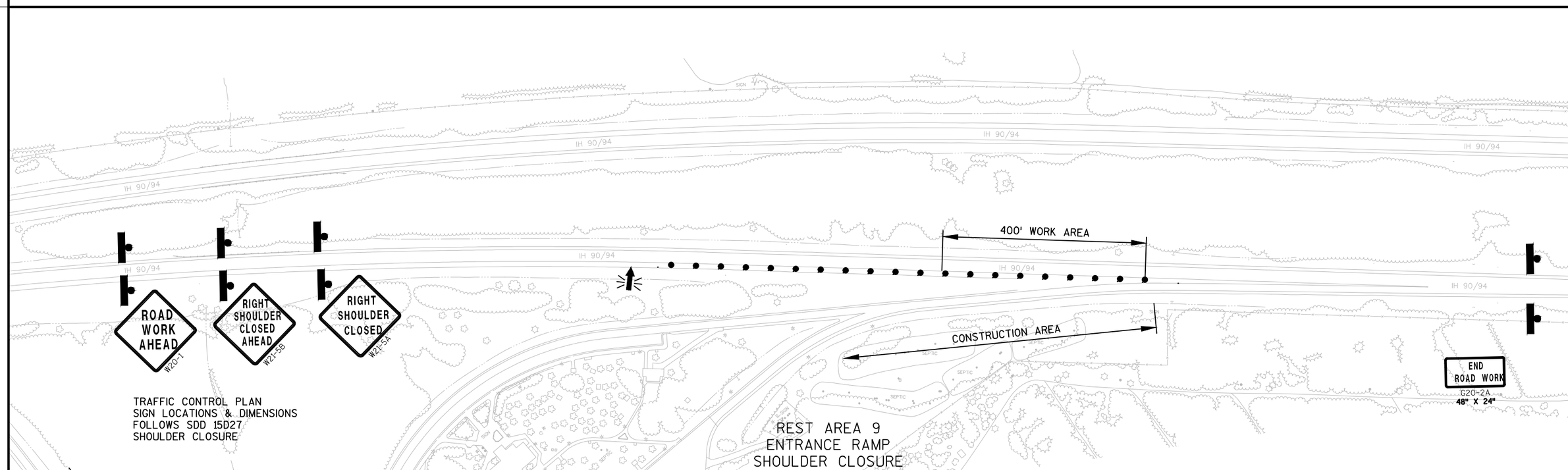

REST AREA 9
ENTRANCE RAMP
SHOULDER CLOSURE

PROJECT NO:1016-05-78	HWY:REST AREAS 9 & 10	COUNTY:JUNEAU	PLAN: RA 9 TRAFFIC CONTROL PLAN	SHEET 40	E

FILE NAME : W:\03 PAVTROAD\DOTRJS\RA9_10_26\RA 9_10\CAD\SHEETSPLAN\025001_TC.DWG PLOT DATE : 1/4/2013 9:00 AM PLOT BY : SCHMALE, RICHARD J PLOT NAME : ---------- PLOT SCALE : 1 IN:200 FT

WISDOT/CADDS SHEET 44

2

CONSTRUCTION AREA

57TH ST

IH 90/94

300' WORK AREA

END ROAD WORK
G20-2A
48" X 24"

TRAFFIC CONTROL PLAN
SIGN LOCATIONS & DIMENSIONS
FOLLOWS SDD 15D27
SHOULDER CLOSURE

RIGHT SHOULDER CLOSED
W21-5A

RIGHT SHOULDER CLOSED AHEAD
W21-5B

ROAD WORK AHEAD
W20-1

REST AREA 10
ENTRANCE RAMP
SHOULDER CLOSURE

STAGE 2 CONSTRUCTION AREA

COVER SIGN

R11-2
48" X 30"
RAMP CLOSED

TYPE III BARRICADE

TRAFFIC CONTROL PLAN
SIGN LOCATIONS & DIMENSIONS
FOLLOWS SDD 15D16
RAMP CLOSURE

RAMP CLOSED 1000 FT
W20-3(MOD)

RAMP CLOSED AHEAD
W20-3(MOD)

ROAD WORK AHEAD
W20-1

PCMS
LOCATE NEXT TO
EXISTING RA SIGN
(REST AREA - 1 MILE)

REST AREA 10
STAGE 2 - EXIT RAMP
RAMP CLOSURE

COVER SIGN

STAGE 1 CONSTRUCTION AREA

TRAFFIC CONTROL PLAN
SIGN LOCATIONS & DIMENSIONS
FOLLOWS SDD 15D12
LANE CLOSURE

A B C D

COVER SIGN

A B C D

W04-2R

RIGHT LANE CLOSED 1500 FT
W20-5

RIGHT LANE CLOSED 1/2 MILE
W20-5

ROAD WORK 1 MILE
W20-1

REST AREA 10
STAGE 1 - EXIT RAMP
LANE CLOSURE

PROJECT NO:1016-05-78	HWY:REST AREAS 9 & 10	COUNTY:JUNEAU	PLAN: RA 10 TRAFFIC CONTROL PLAN	SHEET 41	E

FILE NAME : W:\03 PAVTROAD\DOTRJS\RA9_10_26\RA 9_10\CAD\SHEETSPLAN\025002_TC.DWG PLOT DATE : 1/4/2013 9:01 AM PLOT BY : SCHMALE, RICHARD J PLOT NAME : PLOT SCALE : 1 IN:200 FT

2

REST AREA 9

2

BASELINE F

PI STA = 233+01.77	PI STA = 239+08.59
Y = 142106.39	Y = 142146.45
X = 491234.16	X = 491851.73
DELTA = 35°30'09"	DELTA = 46°32'43"
D = 9°48'30"	D = 88°08'50"
T = 187.01	T = 27.96
L = 361.97	L = 52.80
R = 584.16	R = 65.00
PC STA = 231+14.76	PC STA = 238+80.63
Y = 142204.92	Y = 142144.64
X = 491075.21	X = 491823.84
PT STA = 234+76.73	PT STA = 239+33.44
Y = 142118.50	Y = 142167.94
X = 491420.78	X = 491869.61
BK = S58° 12' 29.02"E	BK = N86° 17' 21.67"E
AH = N86° 17' 21.67"E	AH = N39° 44' 38.73"E

BASELINE C

PI STA = 29+76.83	PI STA = 34+63.90
Y = 142262.50	Y = 142705.10
X = 490820.40	X = 491631.28
DELTA = 117°05'14"	DELTA = 59°15'55"
D = 16°04'49"	D = 10°31'19"
T = 582.44	T = 309.75
L = 728.14	L = 563.25
R = 356.31	R = 544.53
PC STA = 23+94.39	PC STA = 31+54.16
Y = 142844.73	Y = 142556.70
X = 490804.75	X = 491359.40
PT STA = 31+22.53	PT STA = 37+17.41
Y = 142541.55	Y = 142547.25
X = 491331.64	X = 491897.79
BK = S1° 32' 22.52"E	BK = N61° 22' 23.79"E
AH = N61° 22' 23.79"E	AH = S59° 21' 41.36"E

BASELINE B

PI STA = 19+01.77
Y = 143393.26
X = 490790.01
DELTA = 57°29'34"
D = 9°32'48"
T = 329.21
L = 602.22
R = 600.16

PC STA = 15+72.56
Y = 143562.65
X = 490507.73

PT STA = 21+74.79
Y = 143064.17
X = 490798.85

BK = S59° 01' 56.62"E
AH = S1° 32' 22.52"E

PI STA = 31+49.42
Y = 142089.88
X = 490825.04
DELTA = 92°10'16"
D = 9°58'45"
T = 596.34
L = 923.64
R = 574.16

PC STA = 25+53.09
Y = 142686.01
X = 490809.02

PT STA = 34+76.73
Y = 142128.48
X = 491420.13

BK = S1° 32' 22.52"E
AH = N86° 17' 21.67"E

BASELINE D

PI STA = 43+68.86	PI STA = 49+18.84
Y = 142306.87	Y = 142020.68
X = 492302.90	X = 492784.40
DELTA = 34°31'48"	DELTA = 6°05'59"
D = 10°40'49"	D = 3°13'22"
T = 166.73	T = 94.72
L = 323.31	L = 189.27
R = 536.47	R = 1777.87
PC STA = 42+02.13	PC STA = 48+24.11
Y = 142295.81	Y = 142069.08
X = 492136.54	X = 492702.98
PT STA = 45+25.44	PT STA = 50+13.38
Y = 142221.68	Y = 141963.91
X = 492446.23	X = 492860.23
BK = N86° 11' 44.87"E	BK = S59° 16' 27.07"E
AH = S59° 16' 27.07"E	AH = S53° 10' 28.47"E

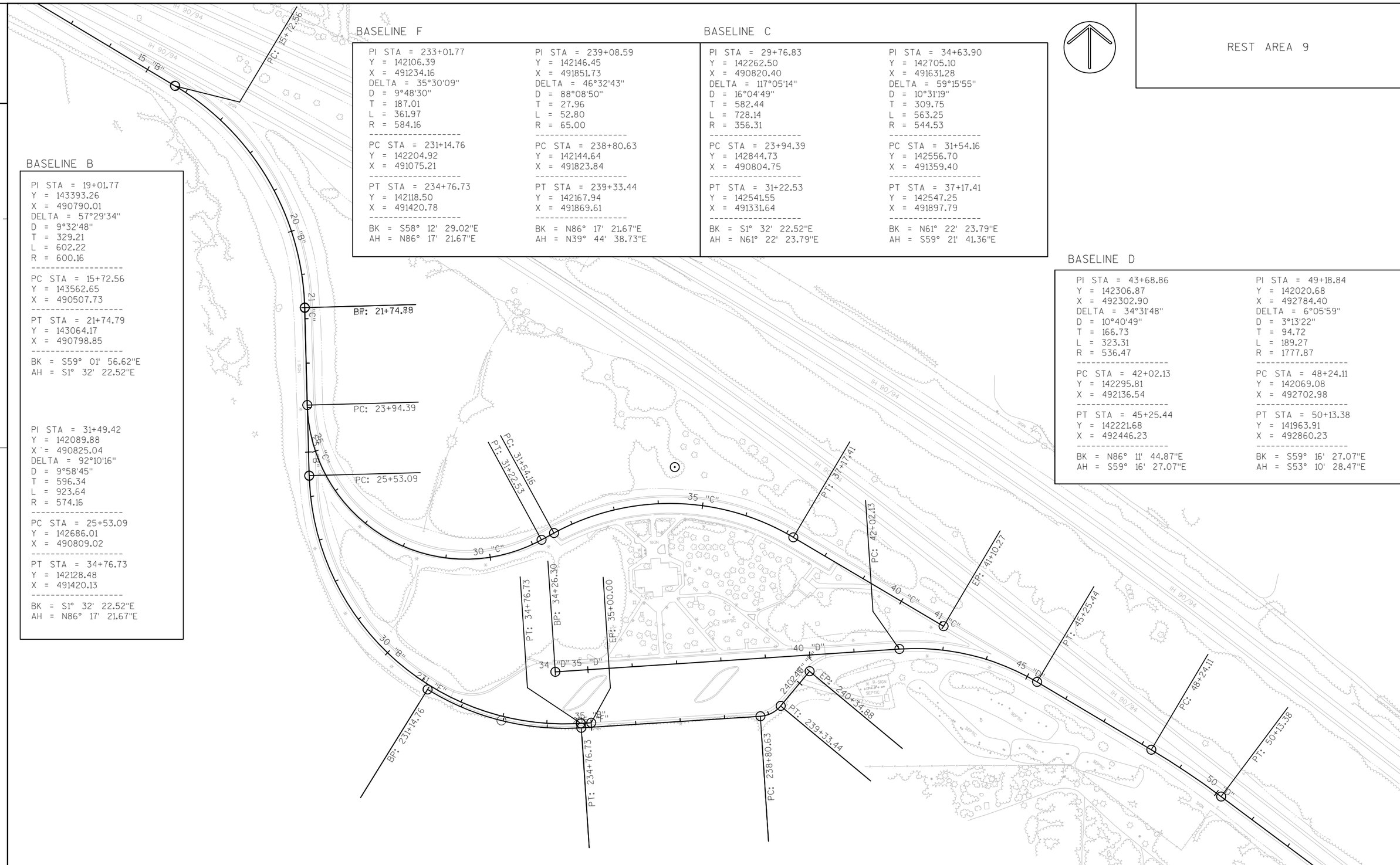

PROJECT NO:1016-05-78	HWY:REST AREAS 9 & 10	COUNTY:JUNEAU	PLAN: ALIGNMENT PLAN	SHEET 42	E

REST AREA 10

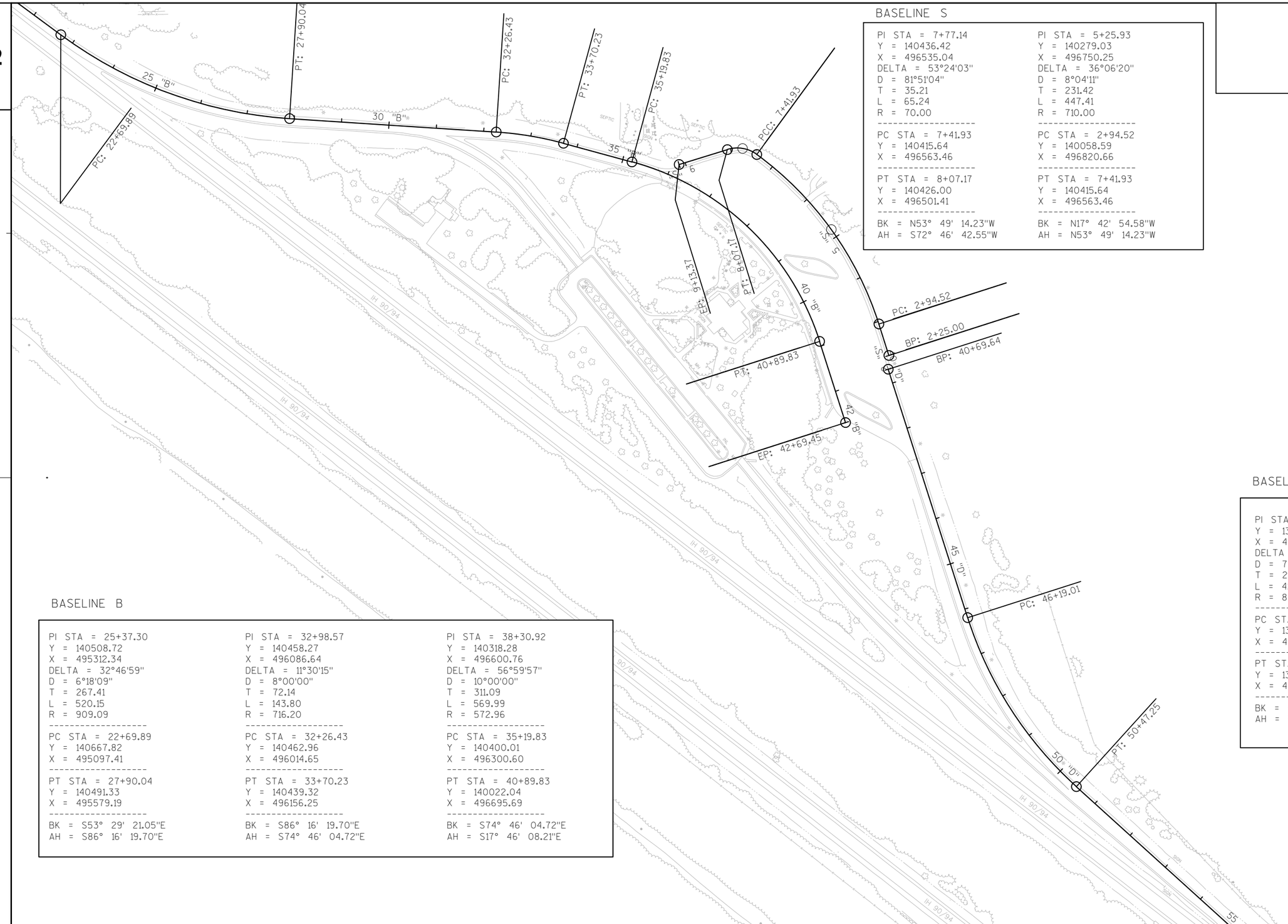

BASELINE S

PI STA = 7+77.14	PI STA = 5+25.93
Y = 140436.42	Y = 140279.03
X = 496535.04	X = 496750.25
DELTA = 53°24'03"	DELTA = 36°06'20"
D = 81°51'04"	D = 8°04'11"
T = 35.21	T = 231.42
L = 65.24	L = 447.41
R = 70.00	R = 710.00
PC STA = 7+41.93	PC STA = 2+94.52
Y = 140415.64	Y = 140058.59
X = 496563.46	X = 496820.66
PT STA = 8+07.17	PT STA = 7+41.93
Y = 140426.00	Y = 140415.64
X = 496501.41	X = 496563.46
BK = N53° 49' 14.23"W	BK = N17° 42' 54.58"W
AH = S72° 46' 42.55"W	AH = N53° 49' 14.23"W

BASELINE D

PI STA = 48+38.18
Y = 139231.36
X = 497074.55
DELTA = 30°03'57"
D = 7°01'14"
T = 219.18
L = 428.25
R = 816.10

PC STA = 46+19.01
Y = 139440.13
X = 497007.82

PT STA = 50+47.25
Y = 139084.11
X = 497236.90

BK = S17° 43' 30.92"E
AH = S47° 47' 28.19"E

BASELINE B

PI STA = 25+37.30	PI STA = 32+98.57	PI STA = 38+30.92
Y = 140508.72	Y = 140458.27	Y = 140318.28
X = 495312.34	X = 496086.64	X = 496600.76
DELTA = 32°46'59"	DELTA = 11°30'15"	DELTA = 56°59'57"
D = 6°18'09"	D = 8°00'00"	D = 10°00'00"
T = 267.41	T = 72.14	T = 311.09
L = 520.15	L = 143.80	L = 569.99
R = 909.09	R = 716.20	R = 572.96
PC STA = 22+69.89	PC STA = 32+26.43	PC STA = 35+19.83
Y = 140667.82	Y = 140462.96	Y = 140400.01
X = 495097.41	X = 496014.65	X = 496300.60
PT STA = 27+90.04	PT STA = 33+70.23	PT STA = 40+89.83
Y = 140491.33	Y = 140439.32	Y = 140022.04
X = 495579.19	X = 496156.25	X = 496695.69
BK = S53° 29' 21.05"E	BK = S86° 16' 19.70"E	BK = S74° 46' 04.72"E
AH = S86° 16' 19.70"E	AH = S74° 46' 04.72"E	AH = S17° 46' 08.21"E

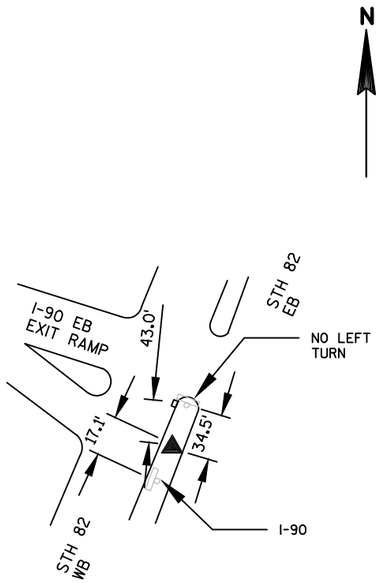

CONTROL SURVEY STATION

MONUMENT NO. 9900

MONUMENT DESCRIPTION
REBAR WITH RED CAP

LOCATION
ASPHALT MEDIAN
STH 82 AT EXIT #69

COORDINATES
X: 156656.80
Y: 467789.86
Z: 870.34 (GPS)

T15N R3E SEC 1

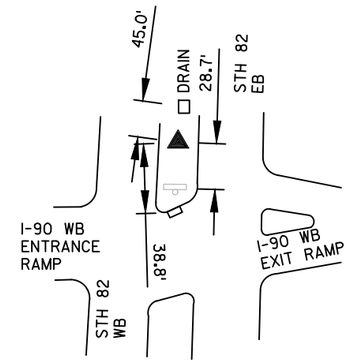

CONTROL SURVEY STATION

MONUMENT NO. 9904

MONUMENT DESCRIPTION
REBAR WITH RED CAP

LOCATION
GRASS MEDIAN
STH 82 AT EXIT #69

COORDINATES
X: 156660.73
Y: 468475.09
Z: 871.58 (GPS)

T15N R4E SEC 6

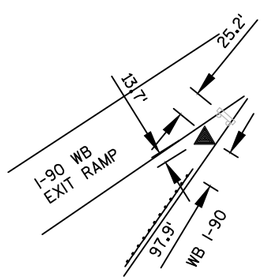

CONTROL SURVEY STATION

MONUMENT NO. 9903

MONUMENT DESCRIPTION
REBAR WITH RED CAP

LOCATION
GRASS GORE
STH 82 AT EXIT #69

COORDINATES
X: 156131.30
Y: 468530.29
Z: 875.77 (GPS)

T15N R4E SEC 6

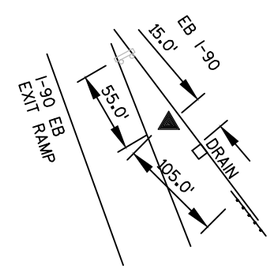

CONTROL SURVEY STATION

MONUMENT NO. 9901

MONUMENT DESCRIPTION
REBAR WITH RED CAP

LOCATION
GRASS GORE
STH 82 AT EXIT #69

COORDINATES
X: 157357.33
Y: 467536.00
Z: 895.60 (GPS)

T15N R3E SEC 1

3

DATE 14MAR13 E S T I M A T E O F Q U A N T I T I E S

LINE NUMBER	ITEM	ITEM DESCRIPTION	UNIT	TOTAL	1016-05-78 QUANTITY
0010	204.0100	REMOVING PAVEMENT	SY	10,015.000	10,015.000
0020	204.0150	REMOVING CURB & GUTTER	LF	1,540.000	1,540.000
0030	204.0155	REMOVING CONCRETE SIDEWALK	SY	860.000	860.000
0040	213.0100	FINISHING ROADWAY (PROJECT) 01. ID 1016-05-78	EACH	1.000	1.000
0050	325.0100	PULVERIZE AND RELAY	SY	12,520.000	12,520.000
0060	415.0090	CONCRETE PAVEMENT 9-INCH	SY	11,075.000	11,075.000
0070	415.1090	CONCRETE PAVEMENT HES 9-INCH	SY	540.000	540.000
0080	416.0610	DRILLED TIE BARS	EACH	4,905.000	4,905.000
0090	416.0620	DRILLED DOWEL BARS	EACH	4,780.000	4,780.000
0100	416.0750.S	CONCRETE PAVEMENT PARTIAL DEPTH REPAIR JOINT REPAIR	LF	2,250.000	2,250.000
0110	416.1710	CONCRETE PAVEMENT REPAIR	SY	1,210.000	1,210.000
0120	416.1720	CONCRETE PAVEMENT REPLACEMENT	SY	2,600.000	2,600.000
0130	465.0105	ASPHALTIC SURFACE	TON	1,170.000	1,170.000
0140	465.0315	ASPHALTIC FLUMES	SY	110.000	110.000
0150	601.0409	CONCRETE CURB & GUTTER 30-INCH TYPE A	LF	1,540.000	1,540.000
0160	602.0410	CONCRETE SIDEWALK 5-INCH	SF	7,600.000	7,600.000
0170	602.0505	CURB RAMP DETECTABLE WARNING FIELD YELLOW	SF	190.000	190.000
0180	619.1000	MOBILIZATION	EACH	1.000	1.000
0190	620.0300	CONCRETE MEDIAN SLOPED NOSE	SF	150.000	150.000
0200	625.0100	TOPSOIL	SY	1,760.000	1,760.000
0210	628.1104	EROSION BALES	EACH	100.000	100.000
0220	628.1905	MOBILIZATIONS EROSION CONTROL	EACH	2.000	2.000
0230	628.1910	MOBILIZATIONS EMERGENCY EROSION CONTROL	EACH	4.000	4.000
0240	628.2004	EROSION MAT CLASS I TYPE B	SY	4,670.000	4,670.000
0250	628.7504	TEMPORARY DITCH CHECKS	LF	470.000	470.000
0260	629.0210	FERTILIZER TYPE B	CWT	14.000	14.000
0270	630.0130	SEEDING MIXTURE NO. 30	LB	96.000	96.000
0280	634.0414	POSTS WOOD 4X4-INCH X 14-FT	EACH	10.000	10.000
0290	634.0616	POSTS WOOD 4X6-INCH X 16-FT	EACH	2.000	2.000
0300	634.0618	POSTS WOOD 4X6-INCH X 18-FT	EACH	1.000	1.000
0310	637.0202	SIGNS REFLECTIVE TYPE II	SF	30.000	30.000
0320	638.2102	MOVING SIGNS TYPE II	EACH	1.000	1.000
0330	638.2602	REMOVING SIGNS TYPE II	EACH	2.000	2.000
0340	638.3000	REMOVING SMALL SIGN SUPPORTS	EACH	2.000	2.000
0350	642.5001	FIELD OFFICE TYPE B	EACH	1.000	1.000
0360	643.0100	TRAFFIC CONTROL (PROJECT) 01. ID 1016-05-78	EACH	1.000	1.000
0370	643.0300	TRAFFIC CONTROL DRUMS	DAY	3,885.000	3,885.000
0380	643.0420	TRAFFIC CONTROL BARRICADES TYPE III	DAY	310.000	310.000
0390	643.0705	TRAFFIC CONTROL WARNING LIGHTS TYPE A	DAY	300.000	300.000
0400	643.0715	TRAFFIC CONTROL WARNING LIGHTS TYPE C	DAY	60.000	60.000
0410	643.0800	TRAFFIC CONTROL ARROW BOARDS	DAY	87.000	87.000
0420	643.0900	TRAFFIC CONTROL SIGNS	DAY	1,230.000	1,230.000
0430	643.0910	TRAFFIC CONTROL COVERING SIGNS TYPE I	EACH	12.000	12.000
0440	643.1050	TRAFFIC CONTROL SIGNS PCMS	DAY	104.000	104.000
0450	646.0106	PAVEMENT MARKING EPOXY 4-INCH	LF	21,310.000	21,310.000
0460	646.0126	PAVEMENT MARKING EPOXY 8-INCH	LF	4,870.000	4,870.000
0470	646.0600	REMOVING PAVEMENT MARKINGS	LF	355.000	355.000
0480	647.0256	PAVEMENT MARKING SYMBOLS EPOXY	EACH	16.000	16.000
0490	647.0456	PAVEMENT MARKING CURB EPOXY	LF	1,885.000	1,885.000
0500	647.0656	PAVEMENT MARKING PARKING STALL EPOXY	LF	9,690.000	9,690.000

3

DATE 14MAR13 E S T I M A T E O F Q U A N T I T I E S

LINE NUMBER	ITEM	ITEM DESCRIPTION	UNIT	TOTAL	1016-05-78 QUANTITY
0510	647.0706	PAVEMENT MARKING DIAGONAL EPOXY 6-INCH	LF	990.000	990.000
0520	649.0400	TEMPORARY PAVEMENT MARKING REMOVABLE TAPE 4-INCH	LF	1,125.000	1,125.000
0530	650.5500	CONSTRUCTION STAKING CURB GUTTER AND CURB & GUTTER	LF	3,055.000	3,055.000
0540	650.7000	CONSTRUCTION STAKING CONCRETE PAVEMENT	LF	4,850.000	4,850.000
0550	652.0125	CONDUIT RIGID METALLIC 2-INCH	LF	10.000	10.000
0560	652.0210	CONDUIT RIGID NONMETALLIC SCHEDULE 40 1-INCH	LF	60.000	60.000
0570	652.0225	CONDUIT RIGID NONMETALLIC SCHEDULE 40 2-INCH	LF	200.000	200.000
0580	652.0700.S	INSTALL CONDUIT INTO EXISTING ITEM	EACH	4.000	4.000
0590	652.0800	CONDUIT LOOP DETECTOR	LF	130.000	130.000
0600	653.0135	PULL BOXES STEEL 24X36-INCH	EACH	13.000	13.000
0610	654.0105	CONCRETE BASES TYPE 5	EACH	3.000	3.000
0620	655.0505	ELECTRICAL WIRE TRAFFIC SIGNALS 14 AWG	LF	1,800.000	1,800.000
0630	655.0615	ELECTRICAL WIRE LIGHTING 10 AWG	LF	195.000	195.000
0640	655.0625	ELECTRICAL WIRE LIGHTING 6 AWG	LF	585.000	585.000
0650	655.0700	LOOP DETECTOR LEAD IN CABLE	LF	80.000	80.000
0660	655.0800	LOOP DETECTOR WIRE	LF	420.000	420.000
0670	656.0500	ELECTRICAL SERVICE BREAKER DISCONNECT BOX (LOCATION) 01. CCTV-29-0109	LS	1.000	1.000
0680	656.0500	ELECTRICAL SERVICE BREAKER DISCONNECT BOX (LOCATION) 02. CCTV-29-0110	LS	1.000	1.000
0690	657.0255	TRANSFORMER BASES BREAKAWAY 11 1/2-INCH BOLT CIRCLE	EACH	3.000	3.000
0700	657.0322	POLES TYPE 5-ALUMINUM	EACH	3.000	3.000
0710	670.0100	FIELD SYSTEM INTEGRATOR	LS	1.000	1.000
0720	670.0200	ITS DOCUMENTATION	LS	1.000	1.000
0730	671.0112	CONDUIT HDPE 1-DUCT 2-INCH	LF	3,610.000	3,610.000
0740	672.0250	BASE CAMERA POLE 50-FT	EACH	2.000	2.000
0750	673.0225.S	INSTALL POLE MOUNTED CABINET	EACH	2.000	2.000
0760	674.0200	CABLE MICROWAVE DETECTOR	LF	1,790.000	1,790.000
0770	675.0300	INSTALL MOUNTED CONTROLLER MICROWAVE DETECTOR ASSEMBLY	EACH	4.000	4.000
0780	675.0400.S	INSTALL ETHERNET SWITCH	EACH	1.000	1.000
0790	677.0100	INSTALL CAMERA POLE	EACH	2.000	2.000
0800	677.0200	INSTALL CAMERA ASSEMBLY	EACH	2.000	2.000
0810	677.0300.S	INSTALL VIDEO ENCODER	EACH	2.000	2.000
0820	678.0006	INSTALL FIBER OPTIC CABLE OUTDOOR PLANT 6-CT	LF	1,830.000	1,830.000
0830	678.0400	FIBER OPTIC TERMINATION	EACH	12.000	12.000
0840	678.0500	COMMUNICATION SYSTEM TESTING	LS	1.000	1.000
0850	690.0250	SAWING CONCRETE	LF	18,420.000	18,420.000
0860	SPV.0060	SPECIAL 01. GROUND ROD	EACH	5.000	5.000
0870	SPV.0060	SPECIAL 02. INSTALL WIRELESS MODEM	EACH	1.000	1.000
0880	SPV.0060	SPECIAL 03. INSTALL EIA-232 TO EIA-422 CONVERTER	EACH	1.000	1.000
0890	SPV.0090	SPECIAL 01.CONCRETE CURB AND GUTTER 24-INCH SPECIAL	LF	1,555.000	1,555.000
0900	SPV.0105	SPECIAL 01. REST AREA 9 BUILDING CONNECTION	LS	1.000	1.000
0910	SPV.0105	SPECIAL 02. REST AREA 10 BUILDING CONNECTION	LS	1.000	1.000

3

3

SIDEWALK REPAIRS

Location	Area #	REMOVING CONCRETE SIDEWALK 204.0155 (SY)	CONCRETE SIDEWALK 5-INCH 602.0410 (SF)	CURB RAMP DETECTABLE WARNING FIELD YELLOW 602.0505 (SF)	SAWING CONCRETE 690.0250 (LF)	NOTES
RA 9	61	26	232	8	16	
RA 9	62	15	132	----	10	
RA 9	63	36	328	8	16	
RA 9	65	17	153	----	12	
RA 9	66	23	208	8	16	
RA 9	68	12	112	----	12	
RA 9	71	22	200	8	16	
RA 9	72	3	30	----	6	
RA 9	74	4	40	----	16	
RA 9	75	7	60	----	12	
RA 9	76	12	112	----	8	
RA 9	77	3	24	----	8	
RA 9	78	9	80	----	8	
RA 9	79	3	30	----	12	
RA 9	80	8	70	----	34	
RA 9	81	1	10	----	14	
RA 9	82	8	70	----	27	
RA 9	83	15	132	----	22	
RA 9	85	17	150	8	12	
RA 9	86	31	280	----	7	
RA 9	88	13	120	8	12	
RA 9	89	10	90	----	12	
RA 9	91	14	126	8	12	
RA 9	92	15	138	----	8	
RA 9	93	22	198	8	12	
RA 9	94	32	286	----	6	
RA9	UNDIST	81	689	16	74	
CAT 0010	TOTAL	460	4100	80	420	

3

SIDEWALK REPAIRS

Location	Area #	REMOVING CONCRETE SIDEWALK 204.0155 (SY)	CONCRETE SIDEWALK 5-INCH 602.0410 (SF)	CURB RAMP DETECTABLE WARNING FIELD YELLOW 602.0505 (SF)	SAWING CONCRETE 690.0250 (LF)	NOTES
RA 10	118	5	48	----	6	
RA 10	119	8	72	----	24	
RA 10	121	12	108	8	36	
RA 10	123	16	144	8	60	
RA 10	125	15	132	8	56	
RA 10	128	4	36	8	12	
RA 10	129	4	36	8	24	
RA 10	131	4	36	8	24	
RA 10	149	8	68	----	14	
RA 10	150	7	64	----	16	
RA 10	151	11	99	----	33	
RA 10	152	24	216	8	54	
RA 10	155	20	176	----	44	
RA 10	156	9	78	----	31	
RA 10	158	20	176	8	44	
RA 10	159	10	90	----	36	
RA 10	162	8	70	----	20	
RA 10	163	4	40	----	18	
RA 10	164	9	85	----	27	
RA 10	165	8	70	----	20	
RA 10	166	2	21	----	6	
RA 10	167	8	70	----	14	
RA 10	168	3	30	----	10	
RA 10	169	5	44	----	33	
RA 10	170	6	----	----	10	Remove only
RA 10	171	3	----	----	10	Remove only
RA 10	173	13	120	8	40	
RA 10	174	15	136	----	32	
RA 10	176	13	120	8	40	
RA 10	177	10	90	----	30	
RA 10	178	13	120	8	40	
RA 10	179	24	220	----	41	
RA 10	180	8	72	----	24	
RA 10	181	4	36	----	12	
RA10	UNDIST	67	578	22	209	
CAT 0020	TOTAL	400	3500	110	1150	
PROJECT	TOTAL	860	7600	190	1570	

3

PAVEMENT MARKING

		PAVEMENT MARKING EPOXY 4-INCH (WHITE) 646.0106	PAVEMENT MARKING EPOXY 4-INCH (YELLOW) 646.0106	PAVEMENT MARKING EPOXY 8-INCH (WHITE) 646.0126	REMOVING PAVEMENT MARKINGS 646.0600	PAVEMENT MARKING SYMBOLS EPOXY (YELLOW) 647.0256	PAVEMENT MARKING CURB EPOXY (YELLOW) 647.0456	PAVEMENT MARKING PARKING STALL EPOXY (4-INCH) (YELLOW) 647.0656	PAVEMENT MARKING PARKING STALL EPOXY (6-INCH) (YELLOW) 647.0656	PAVEMENT MARKING DIAGONAL EPOXY (6-INCH) (YELLOW) 647.0706	
LOCATION	AREA	(LF)	(LF)	(LF)	(LF)	(EACH)	(LF)	(LF)	(LF)	(LF)	NOTES
RA 9	ENTRANCE RAMP	2,000	1,580	780	155	----	----	----	----	----	SHT 501_PM
RA 9	ENTRANCE RAMP	840	815	----	----	----	----	----	----	----	SHT 502_PM
RA 9	CAR LOT	----	685	----	----	5	----	1,280	----	240	SHT 502_PM
RA 9	TRUCK LOT	140	220	----	----	----	556	----	2,760	120	SHT 502_PM
RA 9	EXIT RAMP	310	355	----	----	----	----	----	----	----	SHT 502_PM
RA 9	EXIT RAMP	1,870	825	1,300	----	----	----	----	----	----	SHT 503_PM
RA9	UNDIST	520	450	210	20	1	54	130	280	40	
CAT 0010	RA 9 TOTAL	5,680	4,930	2,290	175	6	610	1,410	3,040	400	
RA 10	EXIT RAMP	1,710	740	1,300	----	----	----	----	----	----	SHT 511_PM
RA 10	EXIT RAMP	860	790	120	----	----	----	----	----	----	SHT 512_PM
RA 10	CAR LOT	----	----	----	----	4	540	1,040	----	220	SHT 512_PM
RA 10	OVERFLOW CAR LOT	645	----	----	----	3	----	1,020	----	170	SHT 512_PM
RA 10	TRUCK LOT	----	215	----	----	----	618	----	2,700	140	SHT 512_PM
RA 10	ENTRANCE RAMP	815	780	----	----	----	----	----	----	----	SHT 512_PM
RA 10	ENTRANCE RAMP	1,800	1,360	920	155	----	----	----	----	----	SHT 513_PM
RA10	UNDIST	590	395	240	25	3	117	210	270	60	
CAT 0020	RA 10 TOTAL	6,420	4,280	2,580	180	10	1,275	2,270	2,970	590	
	PROJECT TOTAL	12,100	9,210	4,870	355	15	1,885	3,680	6,010	990	

TRAFFIC COUNTERS

		CONDUIT RIGID NONMETALLIC SCH 40 1-IN 652.0210	INSTALL CONDUIT INTO EXISTING ITEM 652.0700.S	CONDUIT LOOP DETECTOR 652.0800	PULL BOXES STEEL 24 X 36 653.0135	LOOP DETECTOR LEAD IN CABLE 655.0700	LOOP DETECTOR WIRE 655.0800	
LOCATION	SIDE	(LF)	(EACH)	(LF)	(EACH)	(LF)	(LF)	NOTES
RA 9	TRUCK EXIT	14	1	35	1	20	115	
RA9	UNDIST	6	0	10	0	5	25	
CAT 0010	TOTAL	20	1	45	1	25	140	
RA 10	CAR EXIT	15	1	35	1	20	115	
RA 10	TRUCK EXIT	18	1	35	1	25	115	
RA 10	UNDIST	7	0	15	0	10	50	
CAT 0020	TOTAL	40	2	85	2	55	280	
PROJECT	TOTAL	59	4	130	4	80	420	

3

SIGNS

LOCATION	AREA	POSTS WOOD 4X4-INCH X 14-FT 634.0414 (EACH)	POSTS WOOD 4X6-INCH X 16-FT 634.0616 (EACH)	POSTS WOOD 4X6-INCH X 18-FT 634.0618 (EACH)	SIGNS REFLECTIVE TYPE II 637.0202 (SF)	MOVING SIGNS TYPE II 638.2102 (EACH)	REMOVING SIGNS TYPE II 638.2602 (EACH)	REMOVING SMALL SIGN SUPPORTS 638.3000 (EACH)	NOTES
RA 9	ENTRANCE RAMP		2			1		2	S1 - EX. CAR, TRUCK DIRECTIONAL
RA 9	ENTRANCE RAMP			1	7.5				S1 - R3-60L
RA 9	CAR LOT	1			1.5				S2 - R7-8A
RA 9	CAR LOT	1			1.5				S3 - R7-8A
RA 9	CAR LOT	1			1.5				S4 - R7-8A
RA9	UNDIST	1	0	0	3	0	0	0	
CAT 0010	RA 9 TOTALS	4	2	1	15	1	0	2	
RA 10	CAR LOT	1			1.5				S1 - R7-8A
RA 10	CAR LOT				1.5		1		S2 - R7-8A
RA 10	CAR LOT				1.5		1		S3 - R7-8A
RA 10	CAR LOT	1			1.5				S4 - R7-8A
RA 10	OVERFLOW CAR LOT	1			1.5				S5 - R7-8A
RA 10	OVERFLOW CAR LOT	1			1.5				S6 - R7-8A
RA 10	OVERFLOW CAR LOT	1			1.5				S7 - R7-8A
RA10	UNDIST	1	0	0	4	0	0	0	
CAT 0020	RA 10 TOTALS	6	0	0	15	0	2	0	
	PROJECT TOTALS	10	2	1	30	1	2	2	

TRAFFIC CONTROL

LOCATION	AREA	DURATION (DAYS)	TRAFFIC CONTROL DRUMS (EACH)	TRAFFIC CONTROL DRUMS 643.0300 (DAYS)	TRAFFIC CONTROL BARRICADES TYPE III (EACH)	TRAFFIC CONTROL BARRICADES TYPE III 643.0420 (DAYS)	TRAFFIC CONTROL WARNING LIGHTS TYPE A (EACH)	TRAFFIC CONTROL WARNING LIGHTS TYPE A 643.0705 (DAYS)	TRAFFIC CONTROL WARNING LIGHTS TYPE C (EACH)	TRAFFIC CONTROL WARNING LIGHTS TYPE C 643.0715 (DAYS)	TRAFFIC CONTROL ARROW BOARDS (EACH)	TRAFFIC CONTROL ARROW BOARDS 643.0800 (DAYS)	TRAFFIC CONTROL SIGNS (EACH)	TRAFFIC CONTROL SIGNS 643.0900 (DAYS)	TRAFFIC CONTROL COVERING SIGNS TYPE I 643.0910 (EACH)	TRAFFIC CONTROL SIGNS PCMS (EACH)	TRAFFIC CONTROL SIGNS PCMS 643.1050 (DAYS)	TEMPORARY PAVEMENT MARKING REMOVEABLE TAPE 4-INCH 649.0400 (LF)	NOTES
RA 9	IH-90 ENTRANCE RAMP SHOULDER CLOSURE	30	15	450	----	----	----	----	----	----	1	30	8	240	----	----	----	----	
RA 9	IH-90 EXIT RAMP CLOSURE	30	40	1200	4	120	4	120	----	----	----	----	8	240	2	1	40	500	PCMS 10 DAYS BEFORE CONST.
RA9	UNDIST			415		30		30		0		10		120	3		10	125	
CAT 0010	TOTAL			2065		150		150		0		40		600	5		50	625	
RA 10	IH-90 LANE CLOSURE	3	45	135	2	6	----	----	16	48	2	6	8	24	2	1	3	----	
RA 10	IH-90 ENTRANCE RAMP SHOULDER CLOSURE	30	14	420	----	----	----	----	----	----	1	30	8	240	----	----	----	----	
RA 10	IH-90 EXIT RAMP CLOSURE	30	30	900	4	120	4	120	----	----	----	----	8	240	2	1	40	400	PCMS 10 DAYS BEFORE CONST.
RA10	UNDIST			365		34		30		12		11		126	3		11	100	
CAT 0020	TOTAL			1820		160		150		60		47		630	7		54	500	
PROJECT	TOTAL			3885		310		300		60		88		1230	13		103.75	1125	

3

3

SHOULDER REPAIRS

LOCATION	FROM	TO	SIDE	LENGTH	REMOVING PAVEMENT 204.0100 (SY)	PULVERIZE AND RELAY 325.0100 (SY)	CONCRETE PAVEMENT 9-INCH 415.0090 (SY)	ASPHALTIC SURFACE 465.0105 (TON)	CONSTRUCTION STAKING CURB GUTTER AND CURB & GUTTER 650.5500 (LF)	SAWING CONCRETE 690.0250 (LF)	CONCRETE CURB AND GUTTER 24-INCH SPECIAL SPV 0090.01 (LF)	NOTES
RA 9	13+65 "B"	31+95 "B"	RT	1830	0	2040	0	180	0	0	0	ENTRANCE RAMP / TRUCK RAMP
RA 9	16+10 "B"	23+95 "B"	LT	785	0	530	0	50	0	0	0	ENTRANCE RAMP
RA 9	23+95 "C"	25+15 "C"	LT	120	0	80	0	10	0	0	0	CAR ENTRANCE RAMP
RA 9	27+50 "C"	31+50 "C"	RT	400	0	450	0	40	0	0	0	CAR ENTRANCE RAMP
RA 9	25+00 "B"	31+95 "B"	LT	695	0	470	0	40	0	0	0	TRUCK ENTRANCE RAMP
RA 9	31+95 "B"	33+40 "B"	LT	210	0	140	0	20	0	0	0	NORTH SIDE OF TRUCK LOT
RA 9	231+95 "F"	233+15 "F"	RT	120	6	0	140	0	120	12	120	WEST SIDE OF TRUCK LOT
RA 9	235+13 "F"	240+00 "F"	RT	487	34	0	550	0	487	12	487	WEST & SOUTH SIDE OF TRUCK LOT
RA 9	240+15 "F"	52+10 "D"	RT	1245	0	1390	0	120	0	0	0	TRUCK LOT EXIT
RA 9	42+57 "D"	44+05 "D"	LT	210	0	140	0	20	0	0	0	TRUCK LOT EXIT
RA 9	45+25 "D"	45+75 "D"	LT	210	0	140	0	20	0	0	0	TRUCK LOT EXIT
RA9	UNDIST				10	1080	140	100	123	6	123	
	CAT 0010		RA 9 TOTAL		50	6460	830	600	730	30	730	
RA 10	23+70 "B"	9+13 "S"	RT	1256	0	1400	0	130	0	0	0	NORTH SIDE TRUCK EXIT
RA 10	29+58 "C"	34+03 "C"	LT	445	0	300	0	30	0	0	0	CAR LOT EXIT
RA 10	31+30 "B"	36+00 "B"	LT	470	0	320	0	30	0	0	0	TRUCK LOT EXIT
RA 10	2+25 "S"	9+13 "S"	RT	688	38	0	770	0	688	22	688	EAST & NORTH SIDE OF TRUCK LOT
RA 10	5+90 "S"	6+04 "S"	RT	14	43	0	0	10	0	0	0	MAINTENANCE GARAGE ACCESS ROAD
RA 10	42+37 "D"	60+00 "D"	RT	1763	6	1960	0	170	0	12	0	ENTRANCE RAMP / TRUCK RAMP
RA 10	39+55 "C"	49+10 "C"	RT	955	0	1070	0	100	0	0	0	CAR ENTRANCE RAMP
RA10	UNDIST				18	1010	154	100	137	8	137	
	CAT 0020		RA 10 TOTAL		105	6060	925	570	825	45	825	
			PROJECT TOTALS		155	12520	1755	1170	1555	75	1555	

3

3

EROSION CONTROL

LOCATION	FROM	TO	LENGTH	ASPHALTIC FLUMES 465.0315	TOPSOIL 625.0100 (SY)	EROSION BALES 628.1104 (EACH)	MOBILIZATIONS EROSION CONTROL 628.1905 (EACH)	MOBILIZATIONS EMERGENCY EROSION CONTROL 628.1910 (EACH)	EROSION MAT CLASS 1 TYPE B 628.2004 (SY)	TEMPORARY DITCH CHECKS 628.7504 (LF)	FERTILIZER TYPE B 629.0210 (CWT)	SEEDING MIXTURE NO 30 630.0130 (LB)	NOTES
RA 9	231+95		15	10	----	----	----	----	3	----	0.0	0.1	
RA 9	235+15		16	11	----	----	----	----	3	----	0.0	0.1	
RA 9	236+80		21	14	----	----	----	----	3	----	0.0	0.2	
RA 9	238+40		18	12	----	----	----	----	3	----	0.0	0.1	
RA 9	PB 65	PB 60	100	----	----	----	----	----	120	----	1.0	2.0	ITS CONDUIT RUN
RA 9	PB 60	CCTV-0110	15	----	----	----	----	----	20	----	1.0	1.0	ITS CONDUIT RUN
RA 9	PB 60	PB 55	350	----	----	----	----	----	390	----	1.0	7.0	ITS CONDUIT RUN
RA 9	PB 55	PB50	480	----	----	----	----	----	540	----	1.0	10.0	ITS CONDUIT RUN
RA 9	231+95	233+15	120	----	140	----	----	----	140	36	1.0	3.0	WEST SIDE OF TRUCK LOT
RA 9	235+13	240+00	487	----	550	----	----	----	550	146	1.0	12.0	WEST & SOUTH SIDE OF TRUCK LOT
RA 9	UNDIST			13	140	50	1	2	138	38	1.0	7.5	
	CAT 0010	RA 9 TOTAL		60	830	50	1	2	1910	220	7.0	43.0	
RA 10	2+45		16	11	----	----	----	----	3	----	0.0	0.1	
RA 10	3+55		16	11	----	----	----	----	3	----	0.0	0.1	
RA 10	4+80		12	8	----	----	----	----	3	----	0.0	0.1	
RA 10	6+20		11	8	----	----	----	----	3	----	0.0	0.1	
RA 10	EXCV05	PB 05	175	----	----	----	----	----	200	----	1.0	4.0	ITS CONDUIT RUN
RA 10	PB 05	PB 10	395	----	----	----	----	----	440	----	1.0	8.0	ITS CONDUIT RUN
RA 10	PB 10	PB 15	360	----	----	----	----	----	400	----	1.0	8.0	ITS CONDUIT RUN
RA 10	PB 15	PB 20	60	----	----	----	----	----	70	----	1.0	2.0	ITS CONDUIT RUN
RA 10	PB 15	PB 25	30	----	----	----	----	----	40	----	1.0	1.0	ITS CONDUIT RUN
RA 10	PB 25	DP 25	600	----	----	----	----	----	670	----	1.0	12.0	ITS CONDUIT RUN
RA 10	2+25	9+13	688	----	770	----	----	----	770	206	1.0	14.0	EAST & NORTH SIDE OF TRUCK LOT
RA 10	UNDIST			12	160	50	1	2	158	43	0.0	3.6	
	CAT 0020	RA 10 TOTAL		50	930	50	1	2	2760	250	7.0	53.0	
		PROJECT TOTALS		110	1760	100	2	4	4670	470	14.0	96.0	

3

PAVEMENT REPAIRS

Location	Area #	REMOVING PAVEMENT 204.0100 (SY)	CONCRETE PAVEMENT 9-INCH 415.0090 (SY)	CONCRETE PAVEMENT HES 9-INCH 415.1090	DRILLED TIE BARS 416.0610 (EACH)	DRILLED DOWEL BARS 416.0620 (EACH)	CONCRETE PAVEMENT PARTIAL DEPTH JOINT REPAIR 416.0750 S (LF)	CONCRETE PAVEMENT REPAIR 416.1710 (SY)	CONCRETE PAVEMENT REPLACEMENT 416.1720 (SY)	CONSTRUCTION STAKING CONCRETE PAVEMENT 650.7000 (LF)	SAWING CONCRETE 690.0250 (LF)
RA 9	1	707	707	----	333	24	----	----	----	420	30
RA 9	2	----	----	----	----	----	15	----	----	----	----
RA 9	3	1690	1690	----	805	24	----	----	----	1010	30
RA 9	4	----	----	----	26	12	----	----	122	67	84
RA 9	5	----	----	----	----	----	15	----	----	----	----
RA 9	6	----	----	----	----	----	15	----	----	----	----
RA 9	7	----	----	----	----	----	15	----	----	----	----
RA 9	8	----	----	----	----	----	15	----	----	----	----
RA 9	9	----	----	----	----	----	15	----	----	----	----
RA 9	10	----	----	----	----	----	15	----	----	----	----
RA 9	11	----	----	----	----	----	15	----	----	----	----
RA 9	12	----	----	----	----	----	15	----	----	----	----
RA 9	13	----	----	----	----	----	15	----	----	----	----
RA 9	14	----	----	----	----	----	15	----	----	----	----
RA 9	15	----	----	----	----	----	15	----	----	----	----
RA 9	16	----	----	----	----	----	15	----	----	----	----
RA 9	17	----	----	----	----	----	15	----	----	----	----
RA 9	18	----	----	----	----	----	15	----	----	----	----
RA 9	19	----	----	----	----	----	15	----	----	----	----
RA 9	20	----	----	----	----	----	15	----	----	----	----
RA 9	21	----	----	----	4	24	----	----	20	----	54
RA 9	22	----	----	----	----	----	15	----	----	----	----
RA 9	23	----	----	----	----	----	15	----	----	----	----
RA 9	24	----	----	----	----	----	15	----	----	----	----
RA 9	25	----	----	----	----	----	15	----	----	----	----
RA 9	26	----	----	----	----	----	15	----	----	----	----
RA 9	27	----	----	----	----	----	15	----	----	----	----
RA 9	28	----	----	----	----	----	15	----	----	----	----
RA 9	29	----	----	----	----	----	15	----	----	----	----
RA 9	30	----	----	----	----	----	15	----	----	----	----
RA 9	31	----	----	----	----	----	15	----	----	----	----
RA 9	32	----	----	----	----	----	15	----	----	----	----
RA 9	33	----	----	----	15	24	----	----	43	----	56
RA 9	34	----	----	----	2	24	----	10	----	----	40
RA 9	35	----	----	----	----	----	15	----	----	----	----
RA 9	36	----	----	----	----	----	15	----	----	----	----
RA 9	37	----	----	----	----	----	15	----	----	----	----
RA 9	38	----	----	----	----	----	15	----	----	----	----
RA 9	39	----	----	----	2	24	----	10	----	----	30

3

PAVEMENT REPAIRS

Location	Area #	REMOVING PAVEMENT 204.0100 (SY)	CONCRETE PAVEMENT 9-INCH 415.0090 (SY)	CONCRETE PAVEMENT HES 9-INCH 415.1090	DRILLED TIE BARS 416.0610 (EACH)	DRILLED DOWEL BARS 416.0620 (EACH)	CONCRETE PAVEMENT PARTIAL DEPTH JOINT REPAIR 416.0750 S (LF)	CONCRETE PAVEMENT REPAIR 416.1710 (SY)	CONCRETE PAVEMENT REPLACEMENT 416.1720 (SY)	CONSTRUCTION STAKING CONCRETE PAVEMENT 650.7000 (LF)	SAWING CONCRETE 690.0250 (LF)
RA 9	40	----	----	----	2	24	----	10	----	----	30
RA 9	41	----	----	----	23	24	----	----	60	----	30
RA 9	42	----	----	----	----	----	15	----	----	----	----
RA 9	44	----	----	----	2	36	----	15	----	----	64
RA 9	45	----	----	----	2	36	----	15	----	----	64
RA 9	46	----	----	----	2	36	----	15	----	----	64
RA 9	47	----	----	----	2	36	----	15	----	----	64
RA 9	48	----	----	----	2	36	----	15	----	----	64
RA 9	49	----	----	----	----	----	22	----	----	----	----
RA 9	50	----	----	----	----	----	22	----	----	----	----
RA 9	51	----	----	----	----	----	22	----	----	----	----
RA 9	52	----	----	----	----	----	22	----	----	----	----
RA 9	53	210	210	----	63	36	----	----	----	82	216
RA 9	54	----	----	----	27	36	----	----	100	----	126
RA 9	55	323	323	----	100	36	----	----	----	128	308
RA 9	56	----	----	----	31	36	----	----	112	----	136
RA 9	57	----	----	----	----	----	21	----	----	----	----
RA 9	58	----	----	----	----	----	21	----	----	----	----
RA 9	59	----	----	----	----	----	5	----	----	----	----
RA 9	97	----	----	----	6	16	----	18	----	----	36
RA 9	98	----	----	----	----	----	15	----	----	----	----
RA 9	99	----	----	----	9	10	----	13	----	----	50
RA 9	101	----	----	----	11	12	----	----	30	----	74
RA 9	102	----	----	----	4	24	----	----	22	----	56
RA 9	103	----	----	----	----	----	15	----	----	----	----
RA 9	104	----	----	----	5	18	----	15	----	----	36
RA 9	105	----	----	----	3	12	----	10	----	----	38
RA 9	106	----	----	----	----	----	3	----	----	----	----
RA 9	107	----	----	----	2	24	----	10	----	----	50
RA 9	108	----	----	----	3	24	----	18	----	----	52
RA 9	109	----	----	----	4	12	----	----	20	----	66
RA 9	110	----	----	----	5	24	----	----	23	----	58
RA 9	111	----	----	----	9	12	----	----	28	----	65
RA 9	113	----	----	----	10	12	----	----	21	----	58
RA 9	114	----	----	----	2	23	----	9	----	----	38
RA 9	115	----	----	----	2	24	----	10	----	----	40
RA 9	116	----	----	----	2	24	----	10	----	----	40
RA 9	117	----	----	----	----	----	15	----	----	----	----

3

PAVEMENT REPAIRS

Location	Area #	REMOVING PAVEMENT 204.0100 (SY)	CONCRETE PAVEMENT 9-INCH 415.0090 (SY)	CONCRETE PAVEMENT HES 9-INCH 415.1090	DRILLED TIE BARS 416.0610 (EACH)	DRILLED DOWEL BARS 416.0620 (EACH)	CONCRETE PAVEMENT PARTIAL DEPTH JOINT REPAIR 416.0750 S (LF)	CONCRETE PAVEMENT REPAIR 416.1710 (SY)	CONCRETE PAVEMENT REPLACEMENT 416.1720 (SY)	CONSTRUCTION STAKING CONCRETE PAVEMENT 650.7000 (LF)	SAWING CONCRETE 690.0250 (LF)
RA 9	118	----	----	----	2	24	----	10	----	----	40
RA 9	119	----	----	----	----	----	15	----	----	----	----
RA 9	120	----	----	----	31	24	----	----	77	----	76
RA 9	121	----	----	----	2	24	----	10	----	----	40
RA 9	122	----	----	----	----	----	15	----	----	----	----
RA 9	123	----	----	----	2	24	----	10	----	----	40
RA 9	124	----	----	----	----	----	15	----	----	----	----
RA 9	125	----	----	----	----	----	15	----	----	----	----
RA 9	126	----	----	----	2	24	----	10	----	----	50
RA 9	127	----	----	----	2	24	----	10	----	----	50
RA 9	128	----	----	----	2	24	----	10	----	----	50
RA 9	129	603	603	----	284	24	----	----	----	358	377
RA 9	131	----	----	----	2	24	----	10	----	----	50
RA 9	132	----	----	----	----	----	5	----	----	----	----
RA 9	133	----	----	----	2	24	----	10	----	----	50
RA 9	134	----	----	----	----	----	3	----	----	----	----
RA 9	135	----	----	----	2	24	----	10	----	----	50
RA 9	136	586	586	----	87	120	----	----	----	----	362
RA 9	~~137~~	----	----	----	----	----	----	----	----	----	----
RA 9	138	----	----	----	7	24	----	----	27	----	62
RA 9	139	----	----	----	2	24	----	10	----	----	50
RA 9	140	----	----	----	5	24	----	----	23	----	58
RA 9	141	----	----	----	2	24	----	10	----	----	50
RA 9	142	----	----	----	2	24	----	10	----	----	50
RA 9	143	----	----	----	2	24	----	10	----	----	50
RA 9	144	----	----	----	2	24	----	10	----	----	50
RA 9	145	----	----	----	7	24	----	----	23	----	60
RA 9	146	----	----	----	----	----	4	----	----	----	----
RA 9	147	----	----	----	----	----	4	----	----	----	----
RA 9	148	----	----	----	2	24	----	10	----	----	50
RA 9	~~149~~	----	----	----	----	----	----	----	----	----	----
RA 9	150	----	----	----	14	24	----	----	42	----	80
RA 9	151	----	----	----	----	----	3	----	----	----	----
RA 9	152	----	----	----	3	8	----	2	----	----	13
RA 9	153	----	----	----	----	----	20	----	----	----	----
RA 9	154	----	----	----	----	----	4	----	----	----	----
RA 9	156	----	----	----	2	28	----	11	----	----	44
RA 9	157	----	----	----	2	24	----	10	----	----	40

PAVEMENT REPAIRS

Location	Area #	REMOVING PAVEMENT 204.0100 (SY)	CONCRETE PAVEMENT 9-INCH 415.0090 (SY)	CONCRETE PAVEMENT HES 9-INCH 415.1090	DRILLED TIE BARS 416.0610 (EACH)	DRILLED DOWEL BARS 416.0620 (EACH)	CONCRETE PAVEMENT PARTIAL DEPTH JOINT REPAIR 416.0750 S (LF)	CONCRETE PAVEMENT REPAIR 416.1710 (SY)	CONCRETE PAVEMENT REPLACEMENT 416.1720 (SY)	CONSTRUCTION STAKING CONCRETE PAVEMENT 650.7000 (LF)	SAWING CONCRETE 690.0250 (LF)
RA 9	158	----	----	----	2	24	----	10	----	----	40
RA 9	159	----	----	----	2	24	----	10	----	----	40
RA 9	160	----	----	----	2	24	----	10	----	----	40
RA 9	161	----	----	----	----	----	11	----	----	----	----
RA 9	162	----	----	----	2	24	----	10	----	----	40
RA 9	163	----	----	----	2	24	----	10	----	----	40
RA 9	164	----	----	----	2	24	----	10	----	----	40
RA 9	165	----	----	----	2	24	----	10	----	----	40
RA 9	166	----	----	----	2	24	----	10	----	----	40
RA 9	167	----	----	----	2	24	----	10	----	----	40
RA 9	168	----	----	----	2	24	----	10	----	----	40
RA 9	169	----	----	----	2	24	----	10	----	----	40
RA 9	170	----	----	----	2	24	----	10	----	----	40
RA 9	171	----	----	----	2	24	----	10	----	----	40
RA 9	173	----	----	----	2	24	----	10	----	----	50
RA 9	174	----	----	----	17	12	----	----	45	----	106
RA 9	175	----	----	----	10	24	----	----	23	----	47
RA 9	176	----	----	----	2	24	----	10	----	----	50
RA 9	177	----	----	----	2	24	----	10	----	----	50
RA 9	178	----	----	----	4	24	----	----	22	----	56
RA 9	179	----	----	----	5	24	----	----	23	----	58
RA 9	~~180~~	----	----	----	----	----	----	----	----	----	----
RA 9	181	----	----	----	6	12	----	19	----	----	35
RA 9	182	----	----	----	9	12	----	----	26	----	43
RA 9	~~183~~	----	----	----	----	----	----	----	----	----	----
RA 9	184	----	----	----	9	12	----	----	26	----	40
RA 9	185	----	----	----	2	24	----	10	----	----	40
RA 9	186	----	----	----	2	24	----	10	----	----	40
RA 9	187	----	----	----	2	24	----	10	----	----	40
RA 9	188	----	----	----	2	24	----	10	----	----	40
RA 9	189	----	----	----	2	24	----	10	----	----	40
RA 9	190	----	----	----	2	24	----	10	----	----	40
RA 9	191	190	190	----	85	24	----	----	----	110	30
RA 9	192	----	----	----	34	24	----	----	83	----	30
RA 9	UNDIST	862	866	----	440	441	158	126	213	435	1106
CAT 0010	TOTAL	5,170	5,175	0	2,655	2,620	950	755	1,255	2,610	6,600

3

3

PAVEMENT REPAIRS

Location	Area #	REMOVING PAVEMENT 204.0100 (SY)	CONCRETE PAVEMENT 9-INCH 415.0090 (SY)	CONCRETE PAVEMENT HES 9-INCH 415.1090	DRILLED TIE BARS 416.0610 (EACH)	DRILLED DOWEL BARS 416.0620 (EACH)	CONCRETE PAVEMENT PARTIAL DEPTH JOINT REPAIR 416.0750 S (LF)	CONCRETE PAVEMENT REPAIR 416.1710 (SY)	CONCRETE PAVEMENT REPLACEMENT 416.1720 (SY)	CONSTRUCTION STAKING CONCRETE PAVEMENT 650.7000 (LF)	SAWING CONCRETE 690.0250 (LF)
RA 10	1	----	----	----	2	24	----	10	----	----	42
RA 10	2	----	----	----	2	24	----	10	----	----	42
RA 10	3	618	618	----	83	120	----	----	----	----	366
RA 10	4	----	----	----	32	24	----	----	80	----	74
RA 10	5	----	----	----	----	----	15	----	----	----	----
RA 10	6	----	----	----	2	24	----	10	----	----	42
RA 10	7	----	----	----	2	24	----	10	----	----	42
RA 10	8	----	----	----	2	24	----	10	----	----	42
RA 10	9	----	----	----	36	24	----	----	87	----	126
RA 10	10	----	----	----	2	24	----	10	----	----	42
RA 10	11	----	----	----	7	24	----	----	27	----	42
RA 10	12	----	----	----	2	24	----	10	----	----	36
RA 10	13	----	----	----	----	----	16	----	----	----	----
RA 10	14	----	----	----	4	24	----	----	22	----	42
RA 10	15	----	----	----	10	12	----	----	23	----	35
RA 10	16	----	----	----	----	----	20	----	----	----	----
RA 10	17	----	----	----	2	24	----	10	----	----	42
RA 10	18	----	----	----	2	24	----	10	----	----	42
RA 10	19	----	----	----	2	24	----	10	----	----	42
RA 10	20	----	----	----	2	24	----	10	----	----	42
RA 10	21	----	----	----	2	24	----	10	----	----	42
RA 10	22	----	----	----	2	24	----	10	----	----	42
RA 10	23	----	----	----	2	24	----	10	----	----	42
RA 10	24	----	----	----	2	24	----	10	----	----	42
RA 10	25	----	----	----	2	24	----	10	----	----	42
RA 10	26	----	----	----	5	24	----	----	23	----	50
RA 10	27	----	----	----	2	24	----	10	----	----	42
RA 10	28	----	----	----	5	24	----	----	23	----	50
RA 10	29	----	----	----	2	24	----	10	----	----	42
RA 10	30	----	----	----	15	24	----	----	43	----	74
RA 10	~~31~~	----	----	----	----	----	----	----	----	----	----
RA 10	~~32~~	----	----	----	----	----	----	----	----	----	----
RA 10	34	----	----	----	----	----	2	----	----	----	----
RA 10	35	149	149	----	19	24	----	----	----	----	177
RA 10	36	----	----	----	2	50	----	----	21	----	74
RA 10	~~37~~	----	----	----	----	----	----	----	----	----	----
RA 10	38	----	----	----	2	24	----	10	----	----	42
RA 10	39	----	----	----	2	24	----	10	----	----	42
RA 10	40	----	----	----	----	----	8	----	----	----	----
RA 10	41	----	----	----	4	24	----	----	22	----	48
RA 10	42	----	----	----	----	----	15	----	----	----	----
RA 10	43	----	----	----	----	----	15	----	----	----	----
RA 10	44	----	----	----	----	----	15	----	----	----	----
RA 10	45	----	----	----	----	----	15	----	----	----	----

3

PAVEMENT REPAIRS

Location	Area #	REMOVING PAVEMENT 204.0100 (SY)	CONCRETE PAVEMENT 9-INCH 415.0090 (SY)	CONCRETE PAVEMENT HES 9-INCH 415.1090	DRILLED TIE BARS 416.0610 (EACH)	DRILLED DOWEL BARS 416.0620 (EACH)	CONCRETE PAVEMENT PARTIAL DEPTH JOINT REPAIR 416.0750 S (LF)	CONCRETE PAVEMENT REPAIR 416.1710 (SY)	CONCRETE PAVEMENT REPLACEMENT 416.1720 (SY)	CONSTRUCTION STAKING CONCRETE PAVEMENT 650.7000 (LF)	SAWING CONCRETE 690.0250 (LF)
RA 10	46	----	----	----	----	----	15	----	----	----	----
RA 10	47	----	----	----	----	----	15	----	----	----	----
RA 10	48	----	----	----	----	----	17	----	----	----	----
RA 10	49	----	----	----	----	----	15	----	----	----	----
RA 10	50	----	----	----	----	----	15	----	----	----	----
RA 10	51	----	----	----	2	24	----	10	----	----	42
RA 10	52	----	----	----	19	12	----	5	----	----	27
RA 10	53	----	----	----	4	24	----	13	----	----	46
RA 10	54	----	----	----	2	24	----	10	----	----	42
RA 10	55	----	----	----	2	24	----	10	----	----	42
RA 10	56	----	----	----	2	24	----	10	----	----	42
RA 10	57	----	----	----	2	24	----	10	----	----	42
RA 10	58	----	----	----	2	24	----	10	----	----	42
RA 10	59	----	----	----	2	24	----	10	----	----	42
RA 10	~~60~~	----	----	----	----	----	----	----	----	----	----
RA 10	~~61~~	----	----	----	----	----	----	----	----	----	----
RA 10	~~62~~	----	----	----	----	----	----	----	----	----	----
RA 10	63	----	----	----	2	24	----	10	----	----	42
RA 10	64	----	----	----	----	----	215	----	----	----	----
RA 10	65	----	----	----	11	12	----	----	26	----	61
RA 10	66	----	----	----	2	24	----	10	----	----	42
RA 10	67	----	----	----	----	----	15	----	----	----	----
RA 10	68	----	----	----	10	24	----	----	33	----	62
RA 10	69	----	----	----	2	24	----	10	----	----	42
RA 10	70	----	----	----	----	----	15	----	----	----	----
RA 10	71	----	----	----	2	24	----	10	----	----	42
RA 10	72	----	----	----	2	24	----	10	----	----	30
RA 10	73	215	215	----	97	24	----	----	----	125	155
RA 10	74	----	----	----	10	24	----	----	33	----	30
RA 10	75	263	263	----	120	24	----	----	----	154	90
RA 10	76	148	148	----	25	12	----	----	----	65	20
RA 10	101	----	----	----	8	18	----	----	128	----	81
RA 10	102	----	----	----	----	----	40	----	----	----	----
RA 10	103	----	----	----	----	----	20	----	----	----	----
RA 10	104	----	----	----	2	36	----	15	----	----	56
RA 10	105	----	----	----	----	----	40	----	----	----	----
RA 10	106	----	----	----	----	----	40	----	----	----	----
RA 10	107	----	----	----	----	----	100	----	----	----	----
RA 10	108	----	----	----	4	18	----	16	----	----	20
RA 10	109	----	----	----	----	----	15	----	----	----	----
RA 10	110	----	----	----	----	----	15	----	----	----	----
RA 10	111	----	----	----	----	----	15	----	----	----	----

3

PAVEMENT REPAIRS

Location	Area #	REMOVING PAVEMENT 204.0100 (SY)	CONCRETE PAVEMENT 9-INCH 415.0090 (SY)	CONCRETE PAVEMENT HES 9-INCH 415.1090	DRILLED TIE BARS 416.0610 (EACH)	DRILLED DOWEL BARS 416.0620 (EACH)	CONCRETE PAVEMENT PARTIAL DEPTH JOINT REPAIR 416.0750 S (LF)	CONCRETE PAVEMENT REPAIR 416.1710 (SY)	CONCRETE PAVEMENT REPLACEMENT 416.1720 (SY)	CONSTRUCTION STAKING CONCRETE PAVEMENT 650.7000 (LF)	SAWING CONCRETE 690.0250 (LF)
RA 10	112	----	----	----	----	----	15	----	----	----	----
RA 10	113	----	----	----	----	----	15	----	----	----	----
RA 10	114	----	----	----	----	----	15	----	----	----	----
RA 10	115	----	----	----	----	----	15	----	----	----	----
RA 10	116	----	----	----	----	----	15	----	----	----	----
RA 10	132	----	----	----	----	----	19	----	----	----	----
RA 10	133	----	----	----	----	----	20	----	----	----	----
RA 10	134	----	----	----	----	----	21	----	----	----	----
RA 10	135	----	----	----	15	34	----	----	61	----	86
RA 10	136	----	----	----	----	----	21	----	----	----	----
RA 10	137	----	----	----	----	----	20	----	----	----	----
RA 10	138	----	----	----	----	----	20	----	----	----	----
RA 10	139	----	----	----	----	----	20	----	----	----	----
RA 10	140	----	----	----	29	36	----	----	108	----	124
RA 10	141	----	----	----	15	34	----	----	61	----	86
RA 10	142	----	----	----	----	----	20	----	----	----	----
RA 10	143	----	----	----	----	----	20	----	----	----	----
RA 10	144	156	156	----	45	36	----	----	----	60	164
RA 10	145	----	----	----	15	34	----	----	61	----	86
RA 10	146	----	----	----	----	----	19	----	----	----	----
RA 10	147	----	----	----	29	36	----	----	108	----	124
RA 10	182	----	----	----	4	24	----	----	22	----	48
RA 10	183	----	----	----	----	----	15	----	----	----	----
RA 10	184	----	----	----	----	----	13	----	----	----	----
RA 10	185	----	----	----	----	----	12	----	----	----	----
RA 10	186	----	----	----	----	----	11	----	----	----	----
RA 10	187	----	----	----	----	----	10	----	----	----	----
RA 10	188	----	----	----	3	11	----	8	----	----	24
RA 10	189	----	----	----	1	8	----	3	----	----	15
RA 10	190	----	----	----	1	4	----	2	----	----	11
RA 10	191	136		136	30	25	----	----	----	79	220
RA 10	192-A	478	478	----	225	24	----	----	----	285	600
RA 10	192-B	312		312	145	24	----	----	----	185	400
RA 10	193	----	----	----	----	----	15	----	----	----	----
RA 10	194	203	203	----	92	24	----	----	----	118	266
RA 10	195	----	----	----	47	24	----	----	110	62	154
RA 10	196	1223	1223	----	581	24	----	----	----	730	1490
RA 10	UNDIST	788	691	93	377	364	221	74	226	377	1405
CAT 0020	TOTAL	4,690	4,145	540	2,250	2,160	1,300	455	1,345	2,240	8,435
PROJECT	TOTAL	9,860	9,320	540	4,905	4,780	2,250	1,210	2,600	4,850	15,035

CURB & GUTTER REPAIRS

Location	Area #	REMOVING CURB AND GUTTER 204.0150 (LF)	CONCRETE CURB AND GUTTER 30-INCH TYPE A 601.0409 (LF)	CONCRETE MEDIAN SLOPED NOSE 620.0300 (SF)	CONSTRUCTION STAKING CURB GUTTER AND CURB & GUTTER 650.5500 (LF)	SAWING CONCRETE 690.0250 (LF)	NOTES
RA 9	43	38	38	----	38	43	
RA 9	60	41	41	----	41	46	
RA 9	64	28	28	----	28	33	
RA 9	67	21	21	----	21	26	
RA 9	69	11	11	----	----	16	
RA 9	70	25	25	----	25	30	
RA 9	73	8	8	----	----	13	
RA 9	84	42	42	----	42	47	
RA 9	87	30	30	----	30	35	
RA 9	90	40	40	----	40	45	
RA 9	95	27	27	----	27	32	
RA 9	100	33	33	25	33	38	SLOPE NOSE
RA 9	112	32	32	25	32	37	SLOPE NOSE
RA 9	130	25	25	25	25	30	SLOPE NOSE
RA 9	155	34	34	25	34	39	SLOPE NOSE
RA 9	172	14	14	----	----	19	
RA9	UNDIST	91	91	20	84	111	
CAT 0010	TOTAL	540	540	120	500	640	
RA 10	33	26	26	25	26	31	SLOPE NOSE
RA 10	117	75	75	----	75	81	
RA 10	120	25	25	----	25	31	
RA 10	122	22	22	----	22	28	
RA 10	124	24	24	----	24	30	
RA 10	126	48	48	----	48	54	
RA 10	127	120	120	----	120	126	
RA 10	130	30	30	----	30	36	
RA 10	148	38	38	----	38	44	
RA 10	153	40	40	----	40	46	
RA 10	154	81	81	----	81	87	
RA 10	157	41	41	----	41	47	
RA 10	160	21	21	----	21	27	
RA 10	161	36	36	----	36	42	
RA 10	172	18	18	----	18	24	
RA 10	175	178	178	----	178	184	
RA10	UNDIST	177	177	5	177	182	
CAT 0020	TOTAL	1000	1000	30	1000	1100	
PROJECT	TOTAL	1540	1540	150	1500	1740	

3

3

FTMS PULLBOXES & COMMUNICATION VAULTS

ROADWAY	ITEM ID	652.0700.S INSTALLING CONDUIT INTO EXISTING ITEM EACH	653.0135 PULL BOXES STEEL 24 X 36 - INCH EACH
IH 90/94			
	PB65	--	1
	PB60	--	1
	PB55	--	1
	PB50	--	1
	EXCV05	1	--
	PB05	--	1
	PB10	--	1
	PB15	--	1
	PB20	--	1
	PB25	--	1
	PB35	--	1
	CAT 0030 TOTALS	1	10

FTMS CABLE AND WIRE

ROADWAY	ITEM ID	LINEAR DISTANCE	655.0615 ELECTRICAL WIRE LIGHTING 10 AWG LF	655.0625 ELECTRICAL WIRE LIGHTING 6 AWG LF	674.0200 CABLE MICROWAVE DETECTOR LF
IH 90/94					
	REST AREA 9 BLDG - PB65	5	5	15	--
	PB65 -PB60	105	105	315	--
	PB60 - MBXX	5	5	15	--
	PB60 - CCTV-29-0110	5	--	--	5
	PB60 - PB55	360	--	--	360
	PB55-PB50	470	--	--	470
	PB50 - DP50	5	--	--	5
	PB10 - DP10	5	--	--	5
	PB10 - PB15	360	--	--	360
	PB15 - PB20	50	50	150	--
	PB20 - REST AREA 10 BLDG	5	5	15	--
	PB15 - PB 25	20	20	60	--
	PB 25 - MBYY	5	5	15	--
	PB25 - CCTV-29-0109	5	--	--	10
	PB25 - PB35	570	--	--	570
	PB35 - DP25	5	--	--	5
	CAT 0030 TOTALS		195	585	1790

FTMS CONDUIT

ROADWAY	ITEM ID	LINEAR DISTANCE	652.0125 CONDUIT RIGID METALLIC 2-INCH LF	652.0225 CONDUIT RIGID NONMETALLIC SCHEDULE 40 2-INCH LF	671.0112 CONDUIT HDPE 1-DUCT 2-INCH LF
IH 90/94					
	PB65-PB60	105	--	105	--
	PB60 - MBXX	5	--	--	--
	PB60 - CCTV-29-0110	5	5	10	--
	PB60 - PB55	360	--	--	720
	PB55 - PB50	470	--	--	940
	PB50 - DP50	5	--	5	--
	EXCV05 - PB05	205	--	--	205
	PB05 - PB10	395	--	--	395
	PB10 - DP10	5	--	5	--
	PB10 - PB15	380	--		760
	PB15 - PB20	60	--	60	--
	PB15 - PB 25	20	--	--	20
	PB25 - CCTV-29-0109	5	5	10	--
	PB25 - PB35	570	--	--	570
	PB35 - DP25	5	--	5	--
	CAT 0030 TOTALS		10	200	3610

FTMS CABLE, WIRE, AND GROUNDING

ROADWAY	ITEM ID	LINEAR DISTANCE	655.0505 ELECTRICAL WIRE TRAFFIC SIGNALS 14 AWG LF	678.0006 INSTALL FIBER OPTIC CABLE OUTDOOR PLANT 6-CT LF
IH 90/94				
	PB60 - CCTV-29-0110	5	5	5
	PB60 - PB55	360	360	360
	PB55-PB50	470	470	470
	MS05 - EXCV05	30	--	30
	EXCV05 - PB05	205	205	205
	PB05-PB10	395	395	395
	PB10 - PB15	360	360	360
	PB35 - CCTV-29-0109	5	5	5
	CAT 0030 TOTALS		1800	1830

3

3

FTMS COMMUNICATIONS (CABINETS)

ROADWAY	ITEM ID	673.0225.S INSTALL POLE MOUNTED CABINET EACH	675.0400.S INSTALL ETHERNET SWITCH EACH	677.0300.S INSTALL VIDEO ENCODER EACH	678.0400 FIBER OPTIC TERMINATION EACH	SPV.0105.01 REST AREA 9 BUILDING POWER CONNECTION L.S.	SPV.0105.02 REST AREA 10 BUILDING POWER CONNECTION L.S.
IH 90/94							
	CCTV-29-0110	1	--	1	--	--	--
	MS05	--	--	--	6	--	--
	CCTV-29-0109	1	1	1	6	--	--
	REST AREA 9	--	--	--	--	1	--
	REST AREA 10	--	--	--	--	--	1
	CAT 0030 TOTALS	2	1	2	12	1	1

FTMS LUMP SUM ITEMS

ROADWAY	670.0100 FIELD SYSTEM INTEGRATOR FTMS LS	670.0200 ITS DOCUMENTATION LS	678.0500 COMMUNICATION SYSTEM TESTING LS
IH 94	1	1	1
CAT 0030 TOTALS	1	1	1

3

FTMS BASES, POLES AND EQUIPMENT

ROADWAY	ITEM ID	654.0105 CONCRETE BASES TYPE 5 EACH	657.0255 BASE TRANSFORMER 11 1/2-IN BOLT CIRCLE EACH	657.0322 POLE TYPE 5-ALUMINUM EACH	672.0250 BASE CAMERA POLE 50-FT EACH	675.0300 INSTALL MOUNTED CONTROLLER MICROWAVE DETECTOR ASSEMBLY EACH	677.0100 INSTALL CAMERA POLE EACH	677.0200 INSTALL CAMERA ASSEMBLY EACH	656.0500.01 ELECTRICAL SERVICE BREAKER DISCONNECT BOX (CCTV-29-0110) L.S.	656.0500.02 ELECTRICAL SERVICE BREAKER DISCONNECT BOX (CCTV-29-0109) L.S.	SPV.0060.01 GROUND ROD EACH	SPV.0060.02 INSTALL WIRELESS MODEM EACH	SPV.0060.03 INSTALL EIA-232 TO EIA-422 CONVERTER EACH
IH 90/94													
	CCTV-29-0110	--	--	--	1	1	1	1	1	--	1	1	1
	DP50	1	1	1	--	1	--	--	--	--	1	--	--
	DP10	1	1	1	--	1	--	--	--	--	1	--	--
	CCTV-21-0109	--	--	--	1	--	1	1	--	1	1	--	--
	DP25	1	1	1	--	1	--	--	--	--	1	--	--
	CAT 0030 TOTALS	3	3	3	2	4	2	2	1	1	5	1	1

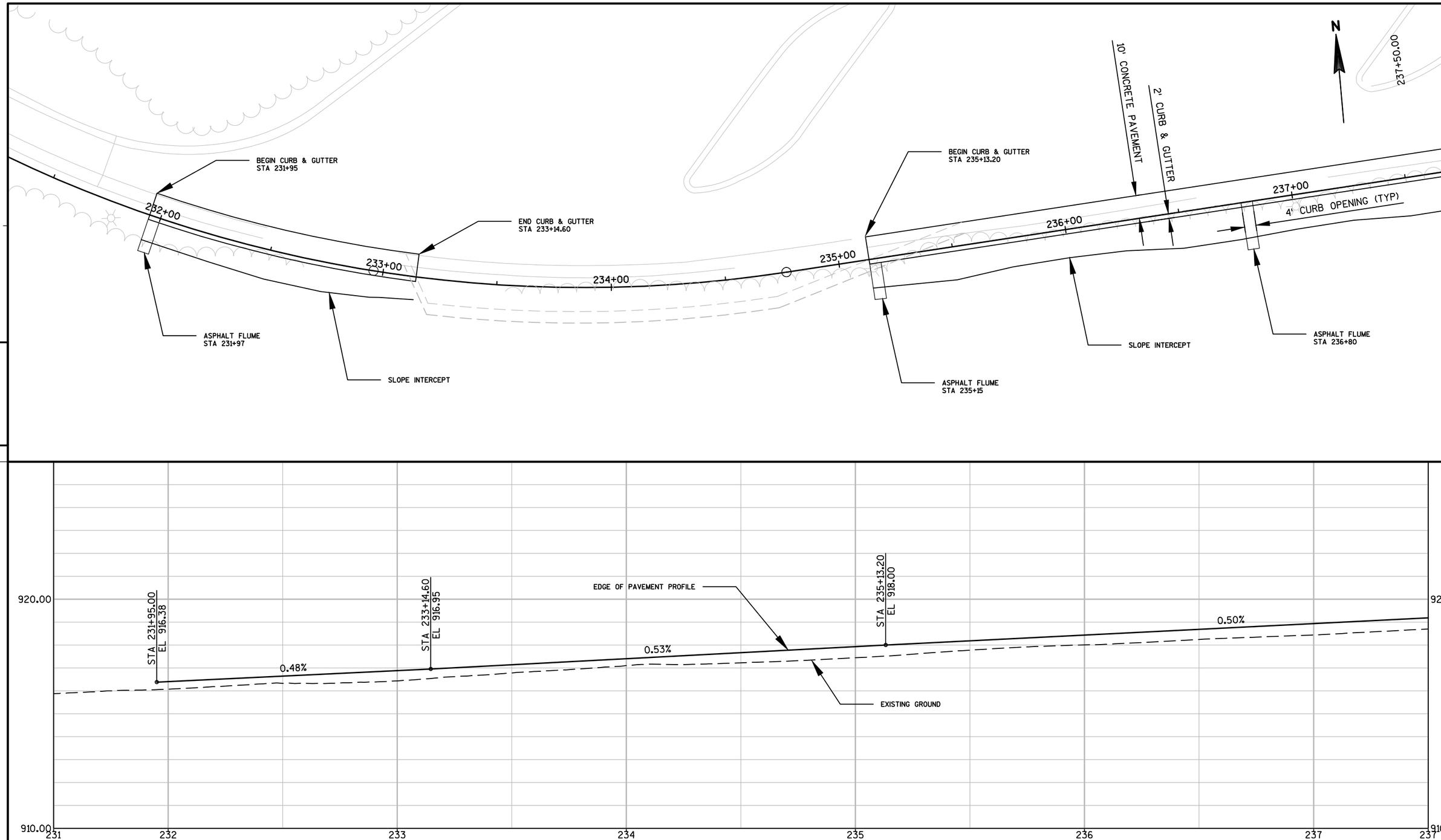

PROJECT NO: 1016-05-78	HWY: REST AREAS 9 & 10	COUNTY: JUNEAU	PLAN AND PROFILE: RA 9 TRUCK LOT WIDENING	SHEET	E

FILE NAME : W:\03 PAVTROAD\DOTRJS\RA9_10_26\RA 9_10\CAD\SHEETSPLAN\050101_PP.DWG PLOT DATE : 1/4/2013 9:14 AM PLOT BY : SCHMALE, RICHARD J PLOT NAME : ---------- PLOT SCALE : 1 IN:40 FT

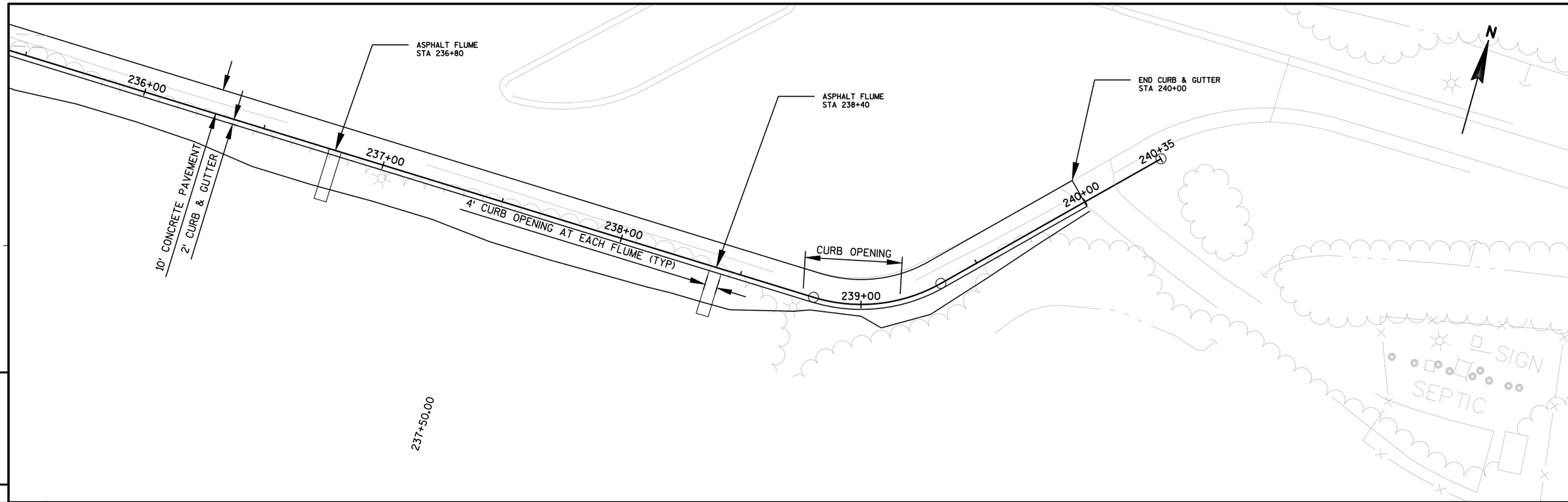

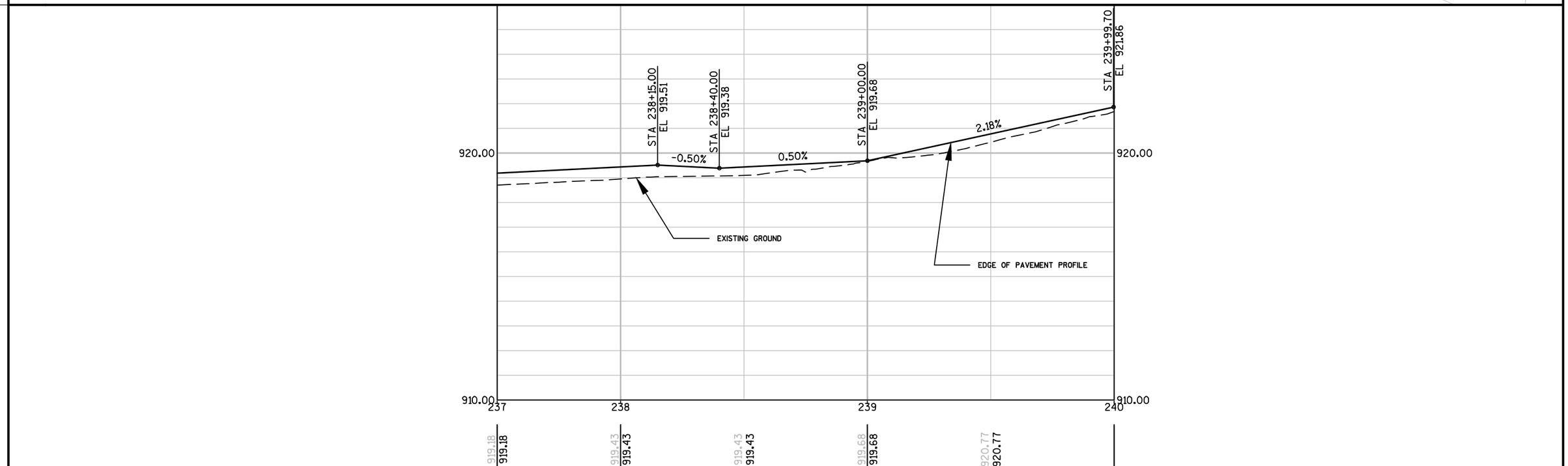

PROJECT NO:1016-05-78	HWY:REST AREAS 9 & 10	COUNTY:JUNEAU	PLAN AND PROFILE: RA 9 TRUCK LOT WIDENING	SHEET 59	E

FILE NAME : W:\03 PAVTROAD\DOTRJS\RA9_10_26\RA 9_10\CAD\SHEETSPLAN\050102_PP.DWG PLOT DATE : 1/4/2013 9:14 AM PLOT BY : SCHMALE, RICHARD J PLOT NAME : ---------- PLOT SCALE : 1 IN:40 FT

WISDOT/CADDS SHEET 44

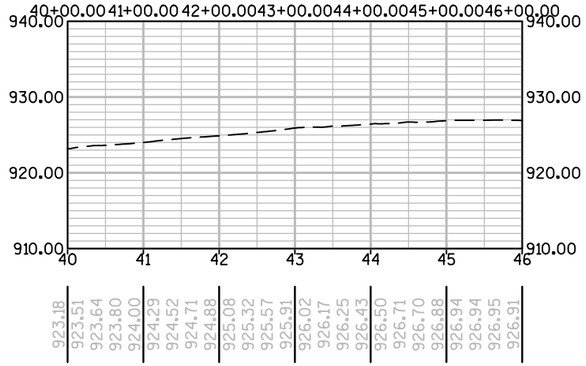

BASELINE D - EXISTING PROFILE

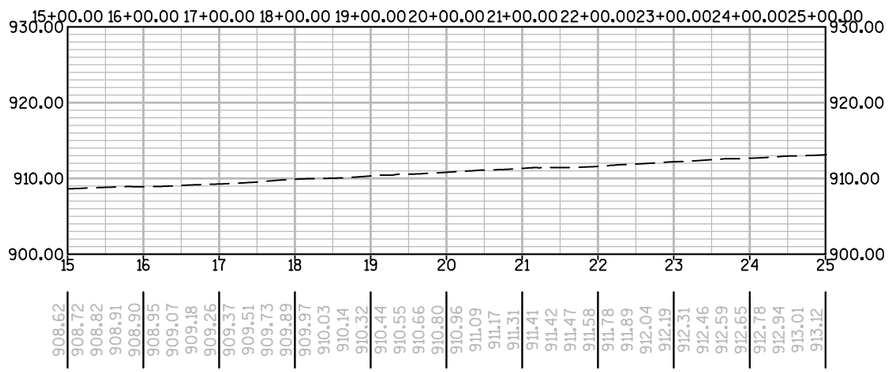

BASELINE B - EXISTING PROFILE

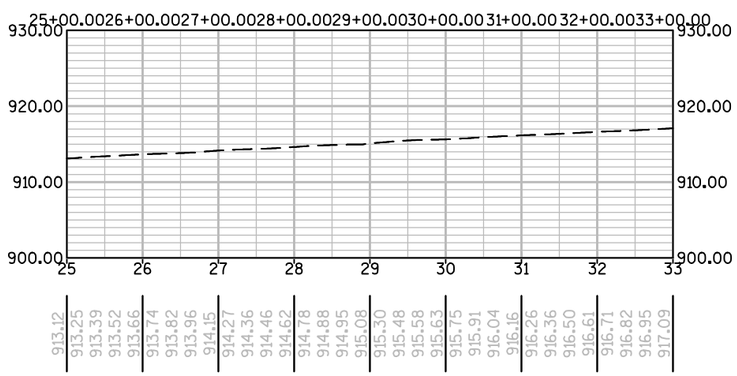

BASELINE B - EXISTING PROFILE

PROJECT NO:1016-05-78	HWY:REST AREAS 9 & 10	COUNTY:JUNEAU	PLAN AND PROFILE: RA 9 PAVEMENT REPAIRS	SHEET 60	E

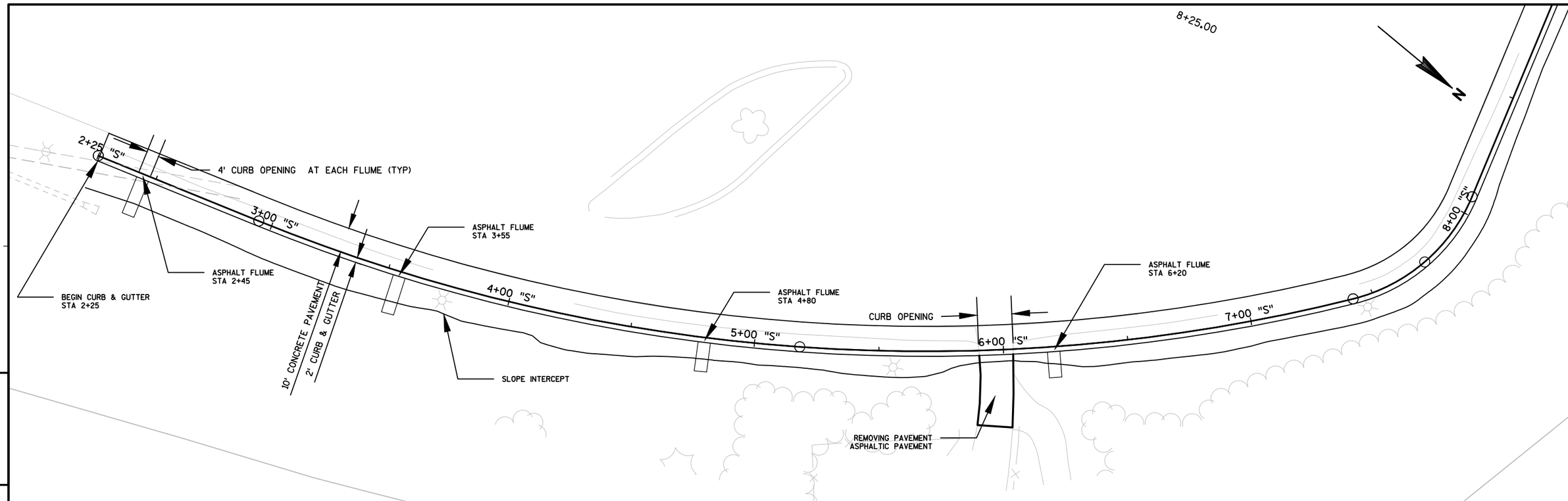

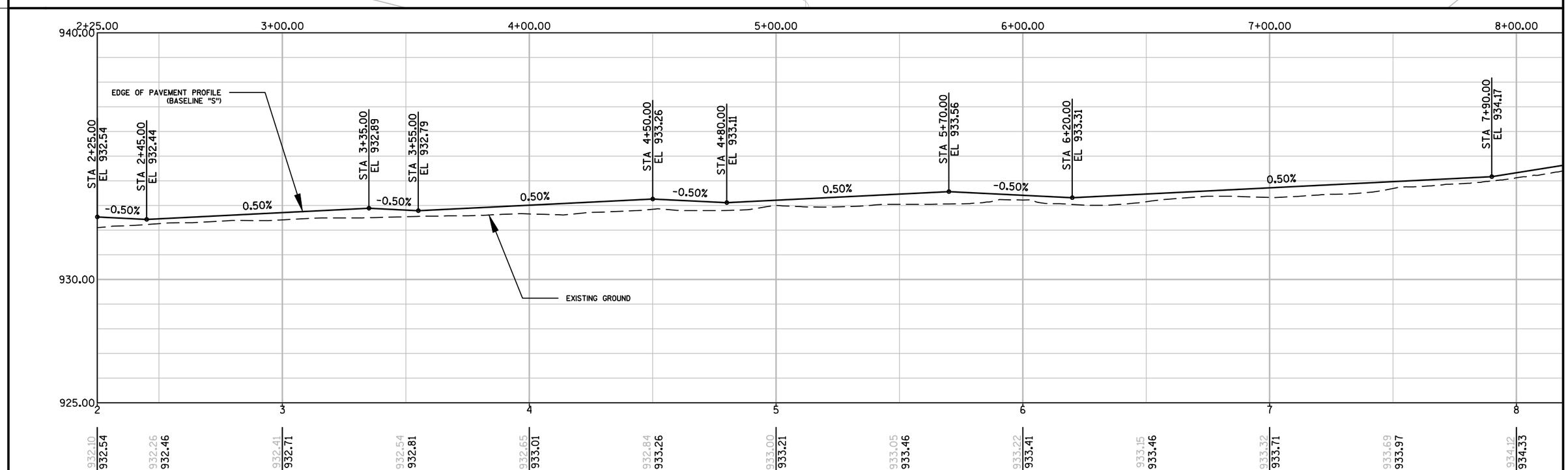

PROJECT NO: 1016-05-78	HWY: REST AREAS 9 & 10	COUNTY: JUNEAU	PLAN AND PROFILE: RA 10 TRUCK LOT WIDENING	SHEET	E

FILE NAME : W:\03 PAVTROAD\DOTRJS\RA9_10_26\RA 9_10\CAD\SHEETSPLAN\050111_PP.DWG PLOT DATE : 1/4/2013 9:15 AM PLOT BY : SCHMALE, RICHARD J PLOT NAME : ---------- PLOT SCALE : 1 IN:40 FT

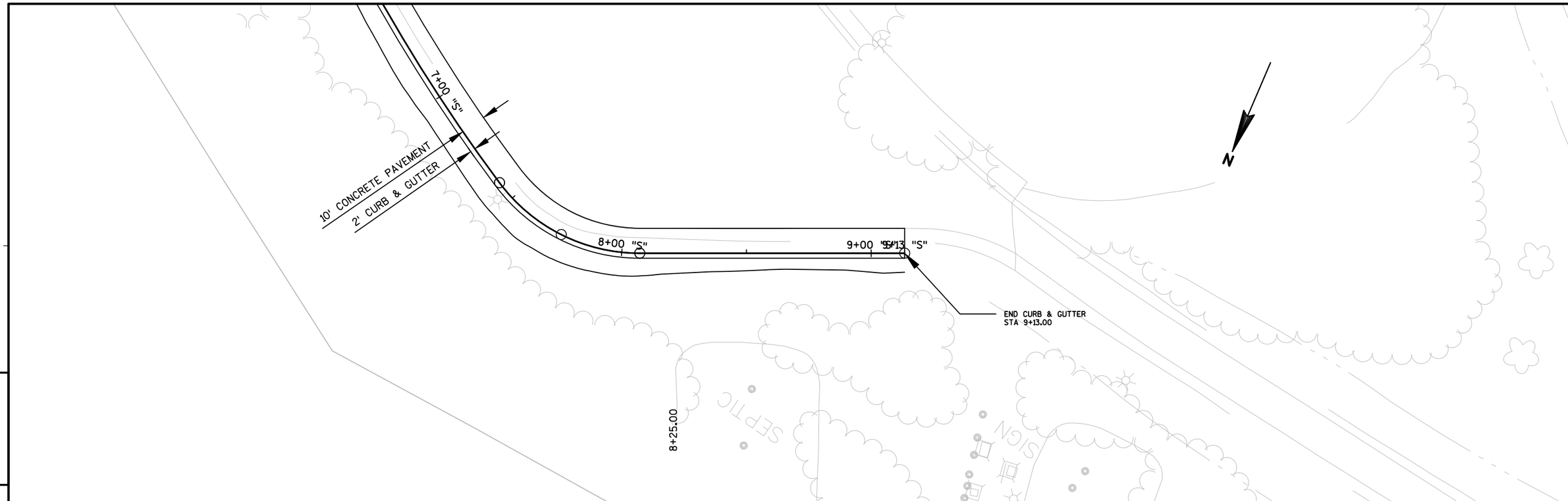

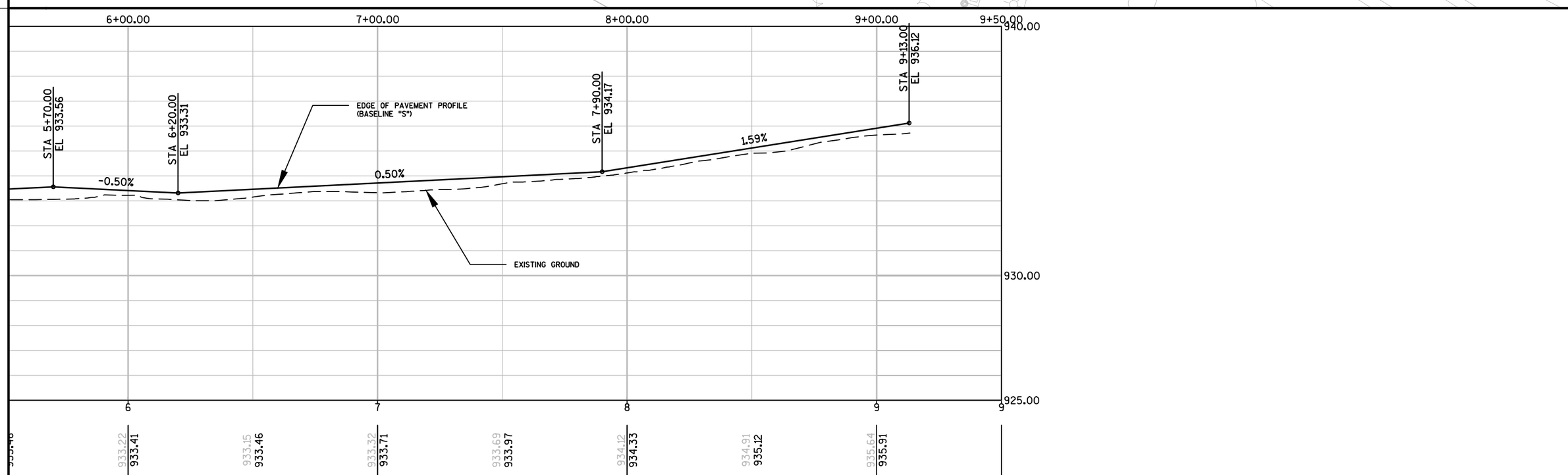

PROJECT NO: 1016-05-78	HWY: REST AREAS 9 & 10	COUNTY: JUNEAU	PLAN AND PROFILE: RA 10 TRUCK LOT WIDENING	SHEET 62	E

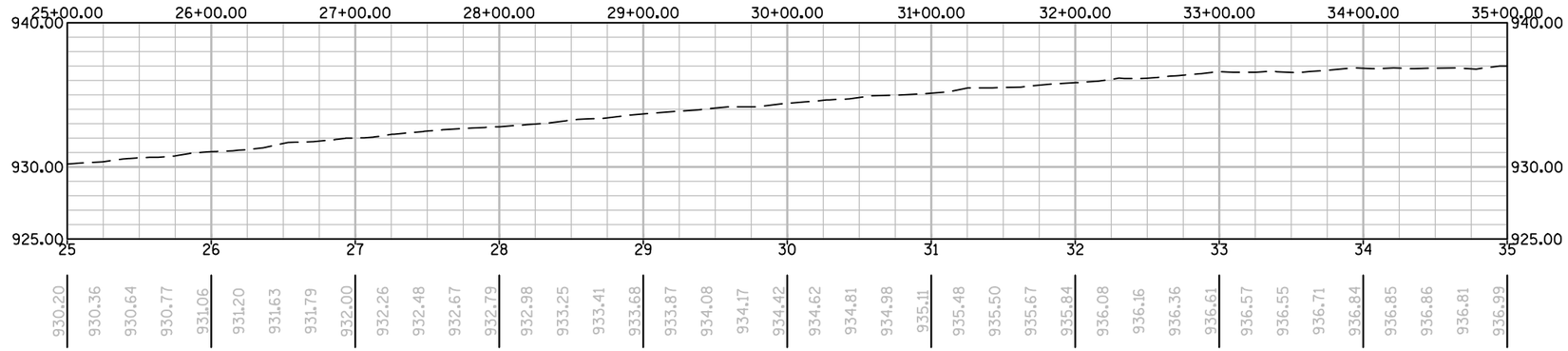

BASELINE B - EXISTING PROFILE

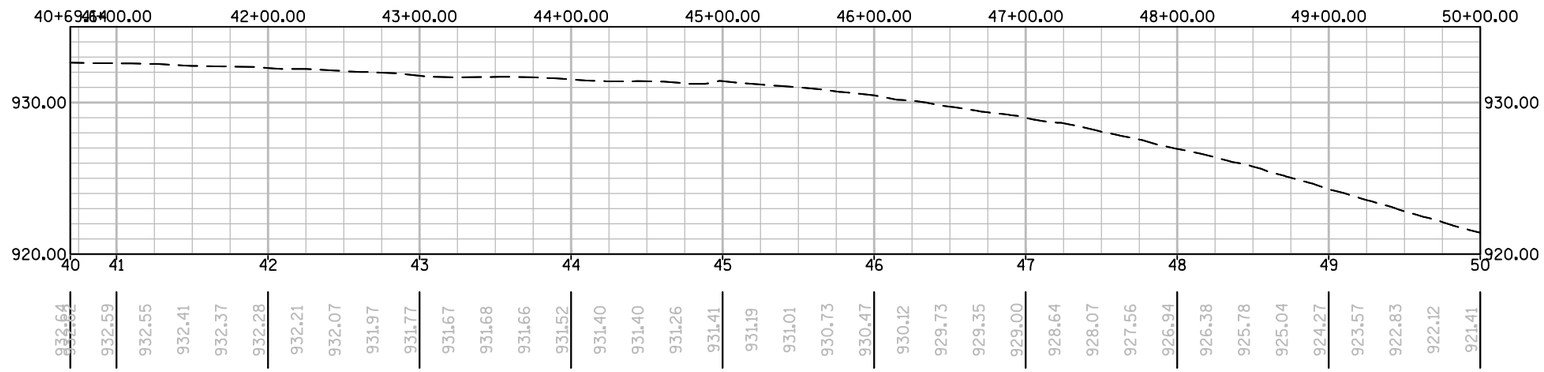

BASELINE D - EXISTING PROFILE

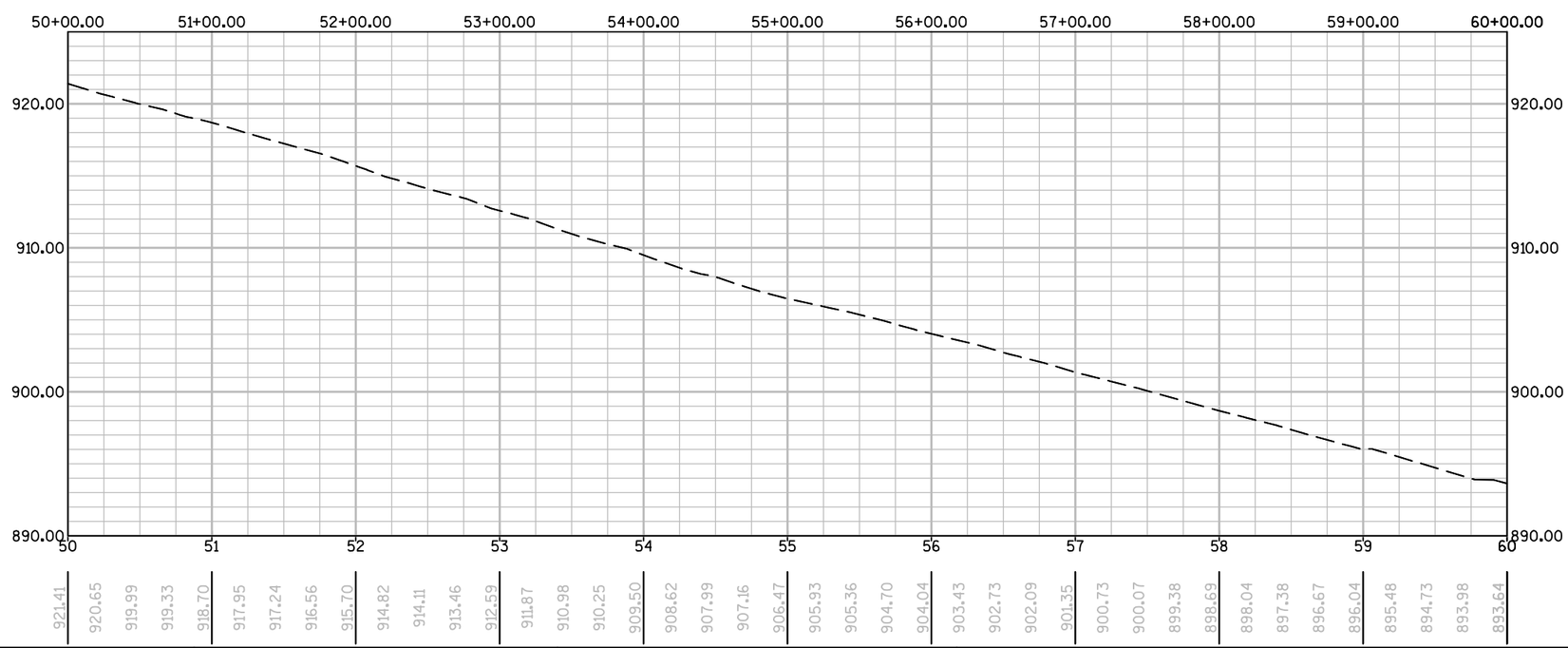

BASELINE D - EXISTING PROFILE

PROJECT NO:1016-05-78	HWY:REST AREAS 9 & 10	COUNTY:JUNEAU	PLAN AND PROFILE: RA 10 PAVEMENT REPAIRS	SHEET 63	E

Standard Detail Drawing List

08D04-05	CONCRETE SURFACE DRAINS & ASPHALTIC FLUMES
08D05-14A	CURB RAMPS TYPES 1 AND 1-A
08D05-14B	CURB RAMPS TYPES 2 AND 3
08D05-14C	CURB RAMPS TYPE 4A
08D05-14D	CURB RAMPS TYPE 4B
08D05-14E	CURB RAMPS TYPES 5, 6, 7A, 7B & 8
08E08-03	TYPICAL INSTALLATIONS OF EROSION BALES / TEMPORARY DITCH CHECKS
09B02-07	CONDUIT
09B04-09	PULL BOX
09C02-06	CONCRETE BASES, TYPES 1, 2 & 5
09E01-11D	POLE MOUNTINGS FOR LIGHTING UNITS, TYPE 5 (30 FEET)
09E02-03	FREEWAY LIGHTING UNIT POLE WIRING
09E03-04	NON-FREEWAY LIGHTING UNIT POLE WIRING
09F15-03B	LOOP DETECTOR INSTALLED IN BASE COURSE WITH PULL (SPLICE) BOX OFF ROADWAY (OPTION 2)
11B02-02	CONCRETE MEDIAN NOSE
13A03-05	CONCRETE PAVEMENT SHOULDERS
13C01-15	CONCRETE PAVEMENT LONGITUDINAL JOINTS AND TIES
13C08-02	CONCRETE PAVEMENT PARTIAL DEPTH REPAIR
13C09-09A	CONCRETE PAVEMENT REPAIR AND REPLACEMENT
13C09-09B	CONCRETE PAVEMENT REPAIR AND REPLACEMENT
13C09-09C	CONCRETE PAVEMENT REPAIR AND REPLACEMENT
13C18-01A	CONCRETE PAVEMENT JOINTING
13C18-01B	CONCRETE PAVEMENT STEEL REINFORCEMENT
13C18-01C	CONCRETE PAVEMENT JOINT TIES
13C18-01D	CONCRETE PAVEMENT JOINTING AT UTILITY FIXTURES
15C07-12A	PAVEMENT MARKING SYMBOLS
15C08-14A	PAVEMENT MARKING (MAINLINE)
15C08-14F	PAVEMENT MARKING (ISLANDS, STOP LINE & CROSS WALK)
15C31-01A	PAVEMENT MARKING (RAMPS AND GORES)
15D12-02	TRAFFIC CONTROL, LANE CLOSURE, SPEEDS GREATER THAN 40 M.P.H.
15D16-01	TRAFFIC CONTROL, EXIT RAMP CLOSURE
15D27-01	TRAFFIC CONTROL, SHOULDER CLOSURE ON DIVIDED ROADWAY, SPEEDS GREATER THAN 40 MPH

6

6

GENERAL NOTES

DETAILS OF CONSTRUCTION, MATERIALS AND WORKMANSHIP NOT SHOWN ON THIS DRAWING SHALL CONFORM TO PERTINENT REQUIREMENTS OF THE STANDARD SPECIFICATIONS AND APPLICABLE SPECIAL PROVISIONS.

WELDED STEEL WIRE FABRIC SHALL BE IN ACCORDANCE WITH AASHTO SPECIFICATION M55.

① JOINTS SHALL BE 1/8 TO 1/4 INCH WIDE BY 1 1/2 INCHES DEEP AND SPACED AT UNIFORM INTERVALS OF APPROXIMATELY 4 FEET.

② GEOTEXTILE FABRIC TYPE "R" SHALL UNDERLAY THE FULL LENGTH AND WIDTH OF THE CONCRETE SURFACE DRAIN AND RIPRAP.

③ CONCRETE SURFACE DRAIN WITHOUT CURB AND GUTTER MAY BE USED ON BACKSLOPES WHEN SPECIFIED

ASPHALTIC FLUME

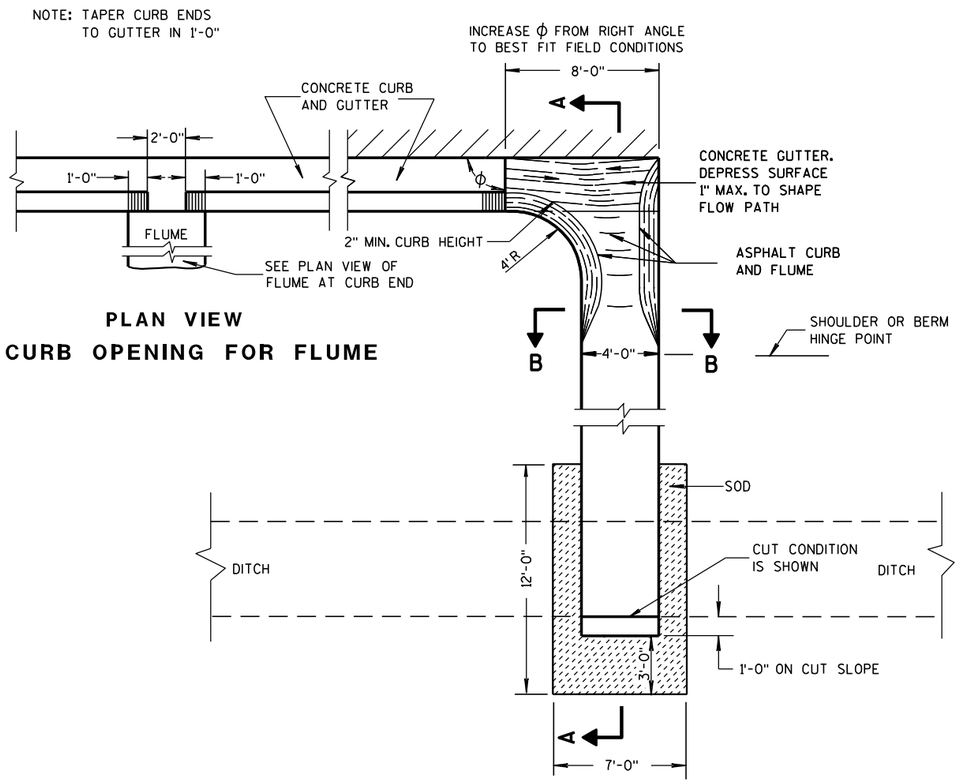

PLAN VIEW
CURB OPENING FOR FLUME

PLAN VIEW
FLUME AT CURB END

③ CONCRETE SURFACE DRAIN

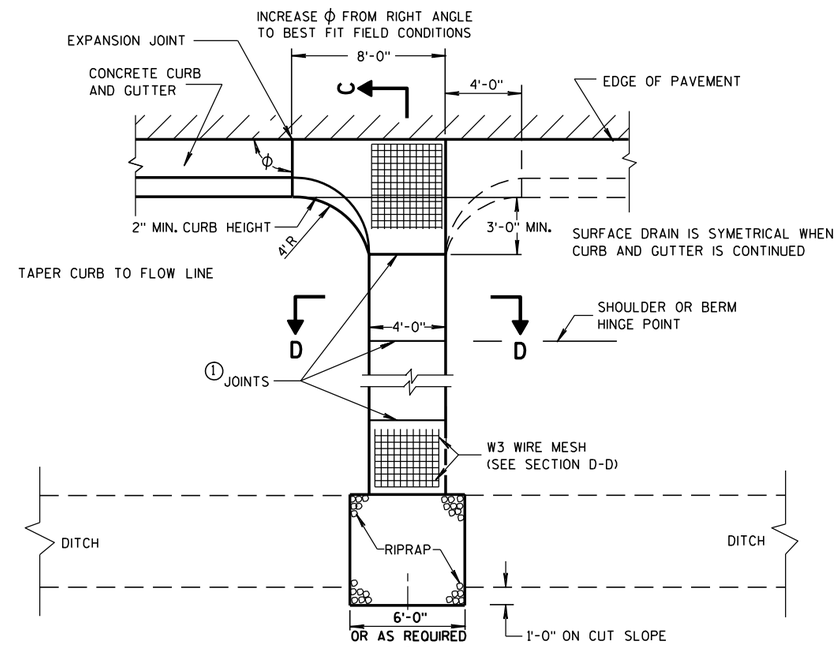

PLAN VIEW

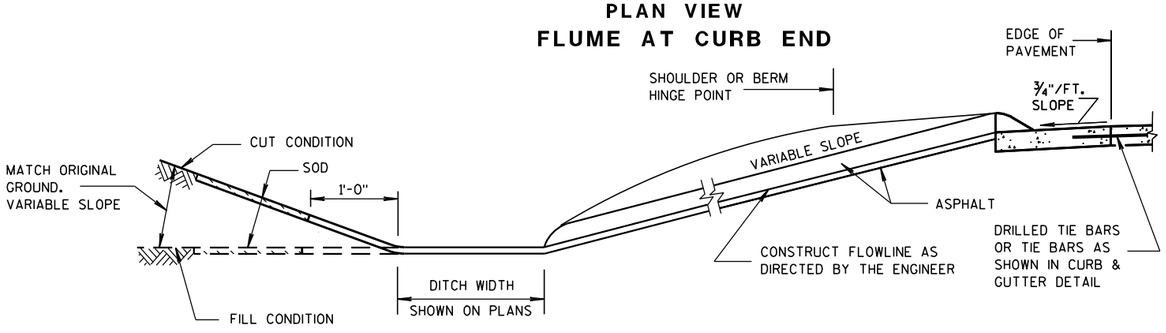

SECTION A-A

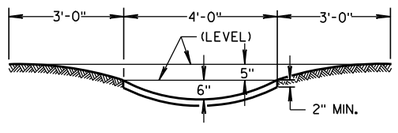

SECTION B-B

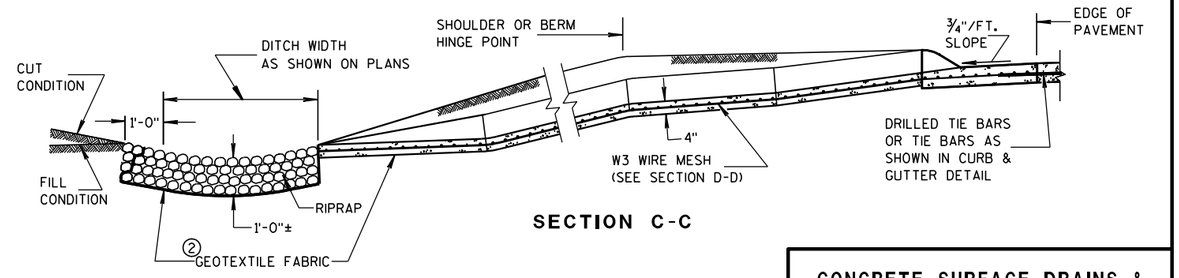

SECTION C-C

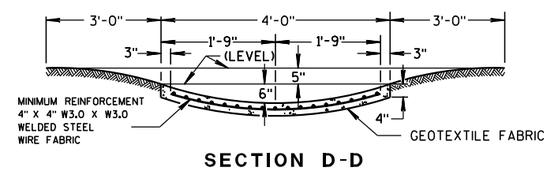

SECTION D-D

CONCRETE SURFACE DRAINS & ASPHALTIC FLUMES

STATE OF WISCONSIN
DEPARTMENT OF TRANSPORTATION

APPROVED
9-4-08 /S/ Jerry H. Zogg
DATE ROADWAY STANDARDS ENGINEER
FHWA

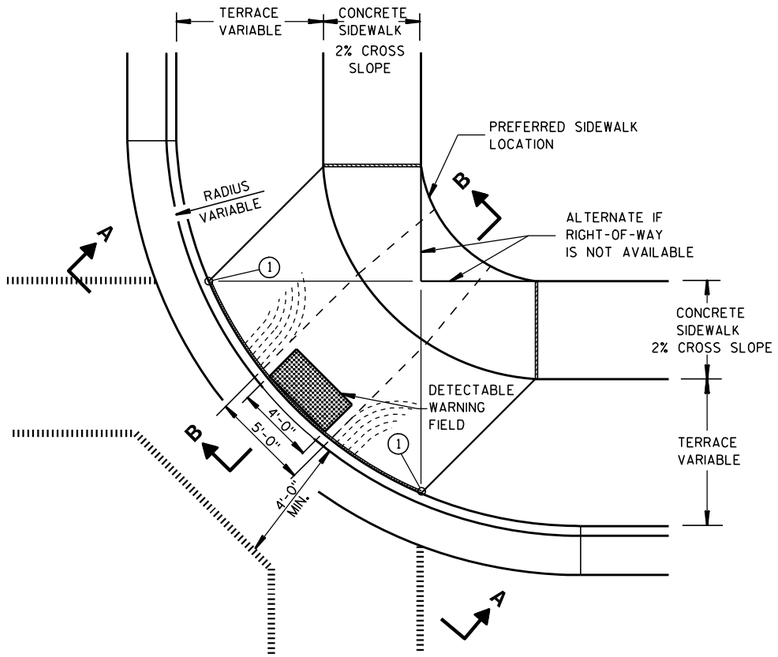

PLAN VIEW

TYPE 1 RAMP

(CENTER OF CORNER RADIUS)

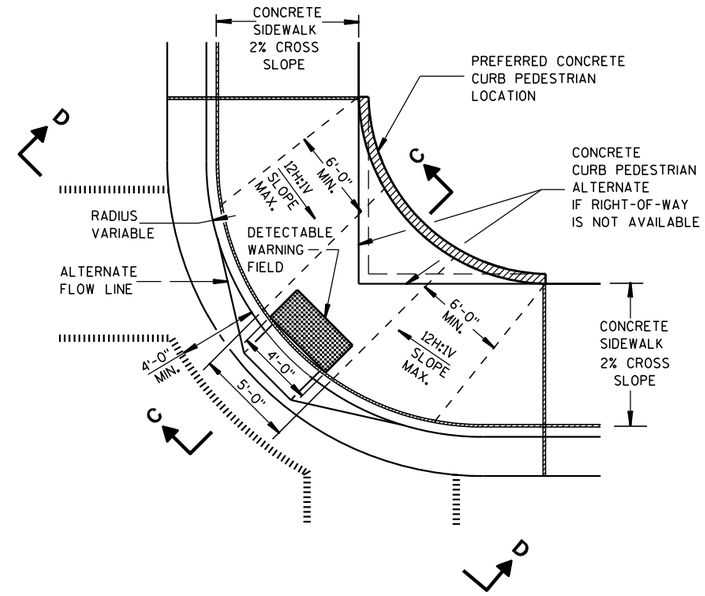

PLAN VIEW

TYPE 1-A RAMP

(NO TERRACE)

GENERAL NOTES

DETAILS OF CONSTRUCTION, MATERIALS AND WORKMANSHIP NOT SHOWN ON THIS DRAWING SHALL CONFORM TO THE PERTINENT REQUIREMENTS OF THE STANDARD SPECIFICATIONS AND THE APPLICABLE SPECIAL PROVISIONS.

RAMPS SHALL BE BUILT AT 12H:1V OR FLATTER. WHEN NECESSARY, THE SIDEWALK ELEVATION MAY BE LOWERED TO MEET THE HIGH POINT ON THE RAMP.

TYPE 1 RAMPS SHALL HAVE A NORMAL SIDEWALK APRON AND CURB ON BOTH SIDES OF RAMP.

DETECTABLE WARNING FIELD SHALL BE MEASURED AND PAID BY THE SQUARE FOOT AS "CURB RAMP DETECTABLE WARNING FIELD". THE CONCRETE PEDESTRIAN CURB, IF NEEDED, SHALL BE MEASURED AND PAID BY THE LINEAL FOOT AS "CONCRETE CURB PEDESTRIAN". CONCRETE SIDEWALK IN THE CURB RAMP AREA SHALL BE MEASURED AND PAID BY THE SQUARE FOOT AS CONCRETE SIDEWALK, INCLUDING THE AREA UNDER THE DETECTABLE WARNING FIELD.

SELECT CURB RAMP DETECTABLE WARNING FIELD MATERIALS AND DEVICES FROM THE DEPARTMENT'S APPROVED MATERIALS LIST. THE COLOR OF THE DETECTABLE WARNING FIELD IS SPECIFIED ELSEWHERE AND IS INCIDENTAL TO THE BID ITEM OF "CURB RAMP DETECTABLE WARNING FIELD".

SURFACE TEXTURE OF THE RAMP SHALL BE OBTAINED BY COARSE BROOMING TRANSVERSE TO THE SLOPE OF THE RAMP.

(1) THIS POINT IS AN EXTENSION OF OUTSIDE EDGE OF APPROACHING SIDEWALK WHERE IT MEETS THE BACK OF CONCRETE CURB.

(2) GRADE CHANGE BETWEEN GUTTER FLAG SLOPE AND THE CURB RAMP SLOPE SHALL NOT EXCEED 11%. PROVIDE DRAINAGE AWAY FROM CURB RAMP AT GUTTER FLAG INTERFACE.

LEGEND

- ½" EXPANSION JOINT-SIDEWALK
- CONTRACTION JOINT FIELD LOCATED
- PAVEMENT MARKING CROSSWALK (WHITE)
- ALTERNATIVE LAYOUT

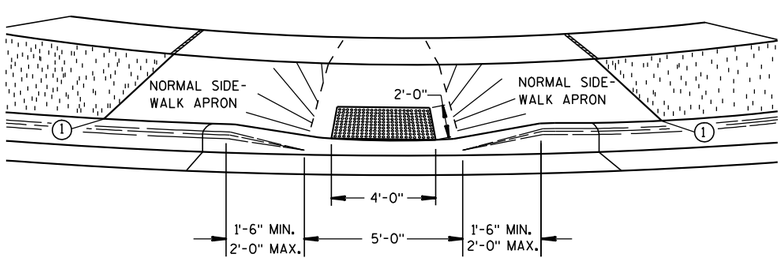

VIEW A-A

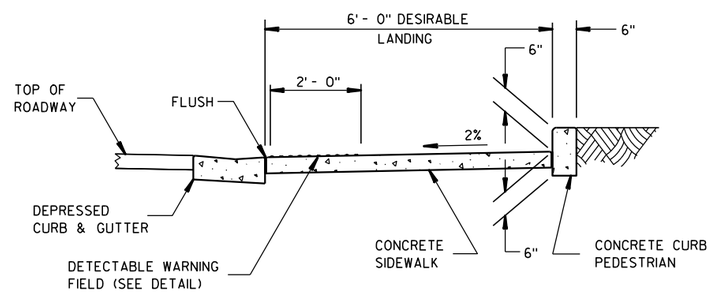

SECTION C-C

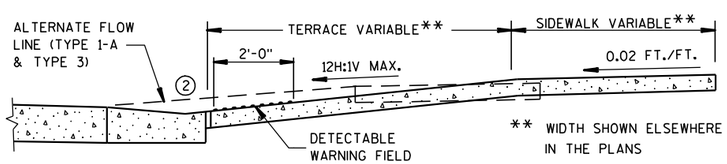

SECTION B-B

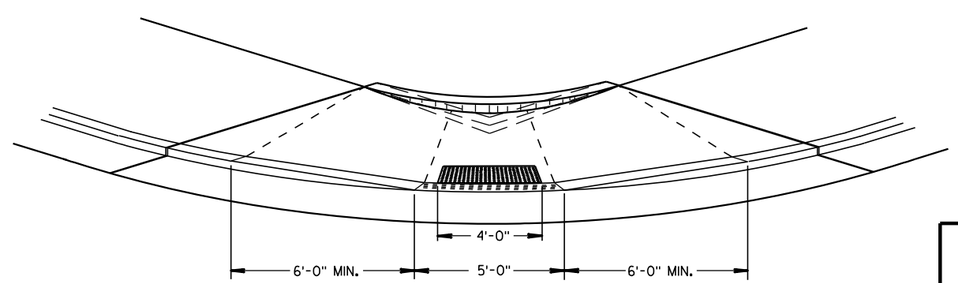

VIEW D-D

CURB RAMPS
TYPES 1 AND 1-A

STATE OF WISCONSIN
DEPARTMENT OF TRANSPORTATION

6

6

S.D.D. 8 D 5-14a

S.D.D. 8 D 5-14a

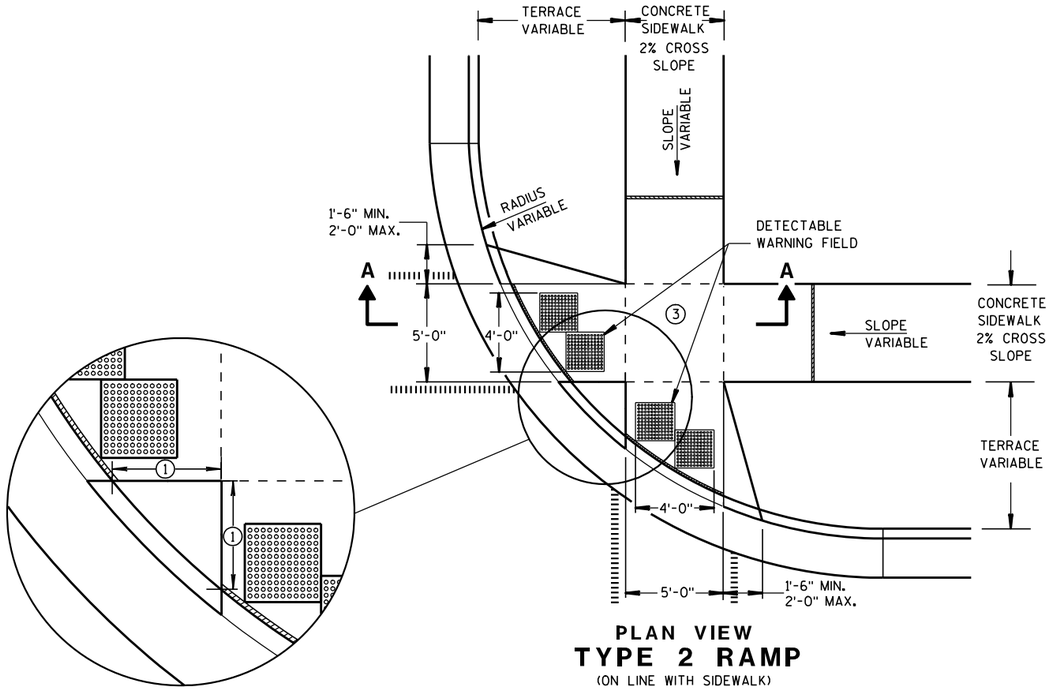

PLAN VIEW
TYPE 2 RAMP
(ON LINE WITH SIDEWALK)

GENERAL NOTES

USE THE TYPE 3 RAMP ONLY WHEN A TYPE 1 OR TYPE 2 CANNOT BE ACHIEVED BECAUSE OF FIELD CONDITIONS.

1. WHEN THIS DISTANCE IS LESS THAN 6'-0" IT MAY BE DIFFICULT TO ACHIEVE A 12H:1V SLOPE, OR FLATTER, ON THE RAMP. REDUCE CURB HEIGHT IN TRIANGLE AREA TO ACHIEVE 12H:1V SLOPE, OR FLATTER, ON RAMP. 2" MINIMUM CURB HEIGHT.

2. GRADE CHANGE BETWEEN GUTTER FLAG SLOPE AND THE CURB RAMP SLOPE SHALL NOT EXCEED 11%. PROVIDE DRAINAGE AWAY FROM CURB RAMP AT GUTTER FLAG INTERFACE.

3. PROVIDE LANDING AT TOP OF RAMP WITH NO MORE THAN 2% SLOPE IN ANY DIRECTION.

LEGEND

- ½" EXPANSION JOINT-SIDEWALK
- CONTRACTION JOINT FIELD LOCATED
- PAVEMENT MARKING CROSSWALK (WHITE)
- ALTERNATIVE LAYOUT

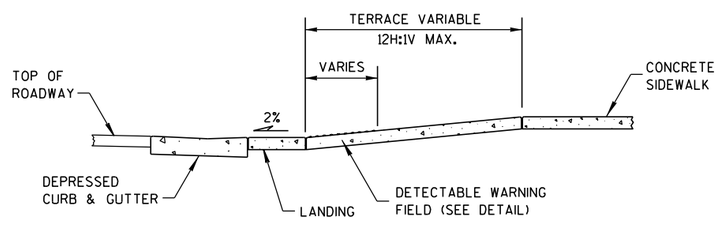

SECTION A-A

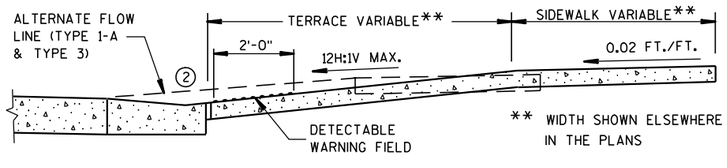

SECTION B-B

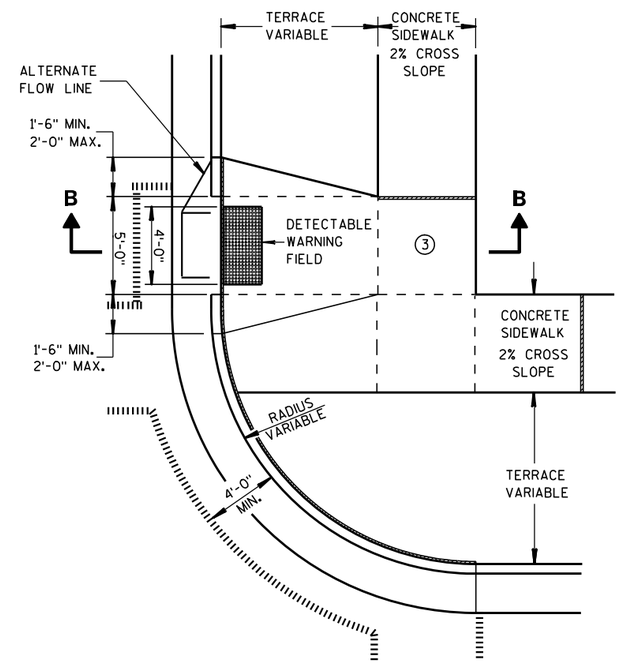

PLAN VIEW
TYPE 3 RAMP
(OUTSIDE OF CROSSWALK AREA)

CURB RAMPS TYPES 2 AND 3

STATE OF WISCONSIN
DEPARTMENT OF TRANSPORTATION

6

S.D.D. 8 D 5-14b

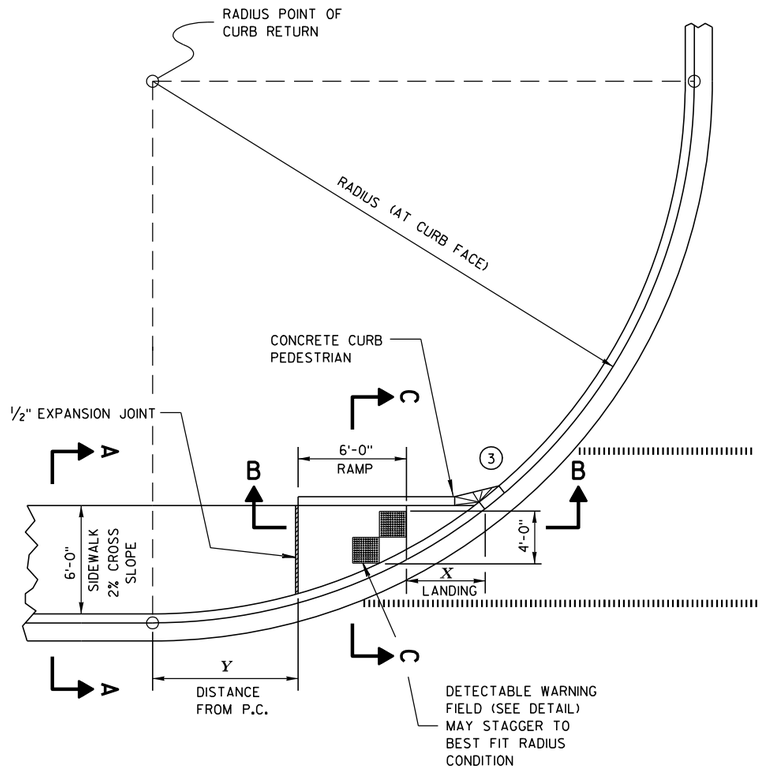

CURB RAMP TYPE 4A
PLAN VIEW

RADIUS (AT CURB FACE)	X	Y
20 FEET	6'-1¾"	2'-7¼"
30 FEET	7'-11¾"	4'-8¼"
40 FEET	9'-5¼"	6'-5"
50 FEET	10'-8¾"	7'-11¼"
60 FEET	11'-10¼"	9'-3½"

INTERMEDIATE RADII CAN BE INTERPOLATED

GENERAL NOTES

AVOID PLACING DRAINAGE STRUCTURES, JUNCTION BOXES OR OTHER OBSTRUCTIONS IN FRONT OF RAMP ACCESS AREAS.

RAMP SLOPES SHALL NOT BE STEEPER THAN 12:1.

SIDEWALK CROSS SLOPE SHALL NOT EXCEED 2%.

(3) INSTALL TRANSITION NOSE. (INCIDENTAL TO OTHER PAY ITEMS.) DO NOT MARK TRANSITION NOSE.

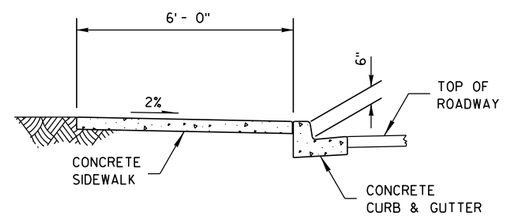

SECTION A-A

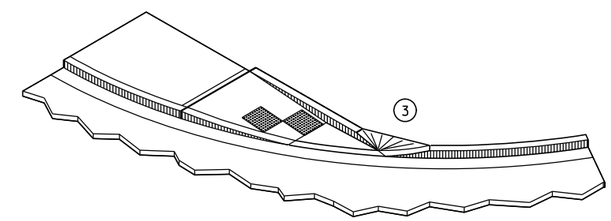

ISOMETRIC VIEW

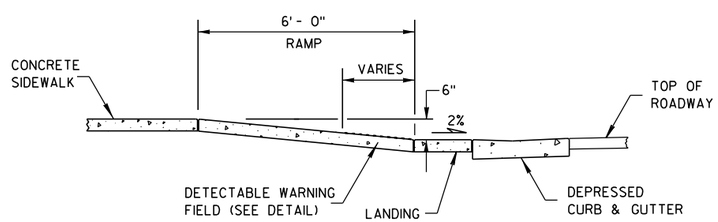

SECTION B-B

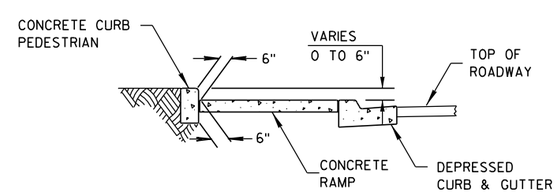

SECTION C-C

LEGEND

- ½" EXPANSION JOINT-SIDEWALK
- CONTRACTION JOINT FIELD LOCATED
- PAVEMENT MARKING CROSSWALK (WHITE)

CURB RAMPS
TYPE 4A

STATE OF WISCONSIN
DEPARTMENT OF TRANSPORTATION

6

6

S.D.D. 8 D 5-14c

S.D.D. 8 D 5-14c

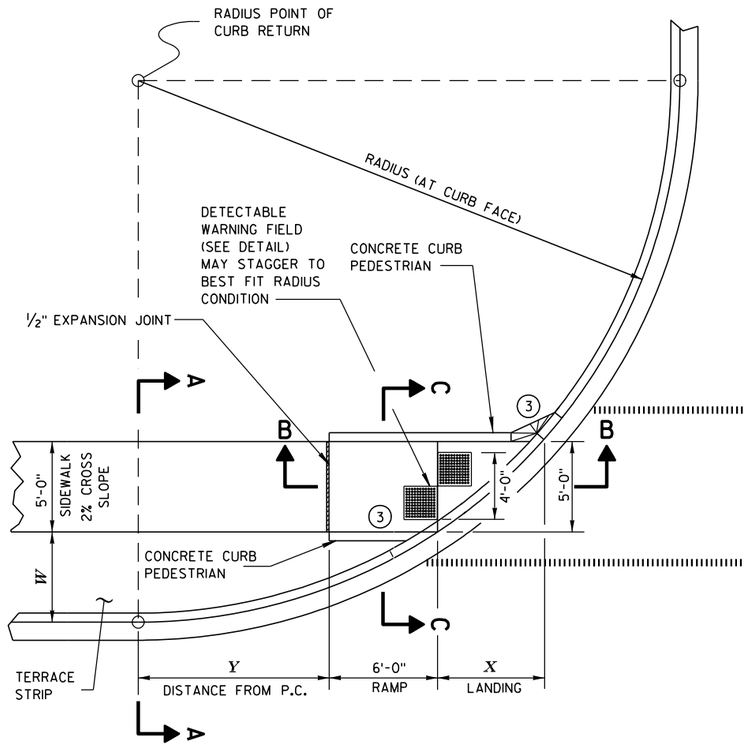

CURB RAMP TYPE 4B
PLAN VIEW

GENERAL NOTES

AVOID PLACING DRAINAGE STRUCTURES, JUNCTION BOXES OR OTHER OBSTRUCTIONS IN FRONT OF RAMP ACCESS AREAS.

RAMP SLOPES SHALL NOT BE STEEPER THAN 12:1.

SIDEWALK CROSS SLOPE SHALL NOT EXCEED 2%.

(3) INSTALL TRANSITION NOSE. (INCIDENTAL TO OTHER PAY ITEMS.) DO NOT MARK TRANSITION NOSE.

RADIUS (AT CURB FACE)	W = 3'- 0"		W = 4'- 0"		W = 5'- 0"		W = 6'- 0"		W = 7'- 0"	
	X	Y	X	Y	X	Y	X	Y	X	Y
20 FEET	5'-5½"	4'-6½"	4'-8½"	6'-0"	4'-1"	7'-2¾"	3'-7"	8'-3½"	3'-1½"	9'-2½"
30 FEET	7'-3¾"	7'-1"	6'-5½"	8'-11½"	5'-9¼"	10'-7"	5'-2½"	12'-0"	4'-8¾"	13'-3¼"
40 FEET	8'-9½"	9'-2½"	7'-10"	11'-5¼"	7'-1"	13'-4½"	6'-5¾"	15'-¾"	5'-11½"	16'-7¼"
50 FEET	10'-¾"	11'-¾"	9'-¼"	13'-7¼"	8'-2½"	15'-9½"	7'-6½"	17'-9"	6'-11¾"	19'-6¼"
60 FEET	11'-2½"	12'-8¾"	10'-¾"	15'-6½"	9'-2¼"	17'-11¾"	8'-5¾"	20'-1¾"	7'-10½"	22'-1½"
70 FEET	12'-2¾"	14'-3¼"	11'-¼"	17'-4"	10'-1"	19'-11¾"	9'-3¾"	22'-4¼"	8'-8¼"	24'-6¼"
80 FEET	13'-2"	15'-8½"	11'-10½"	18'-11¾"	10'-10¾"	21'-10"	10'-1"	24'-4¾"	9'-5"	26'-8¾"
90 FEET	14'- ½"	17'-½"	12'-8¼"	20'-6½"	11'-7¾"	23'-7"	10'-9¾"	26'-3¾"	10'-1¼"	28'-9½"
100 FEET	14'-10½"	18'-3¾"	13'-5½"	22'-0"	12'-4¼"	25'-2¾"	11'-5¾"	28'-1½"	10'-9"	30'-9"

INTERMEDIATE RADII CAN BE INTERPOLATED

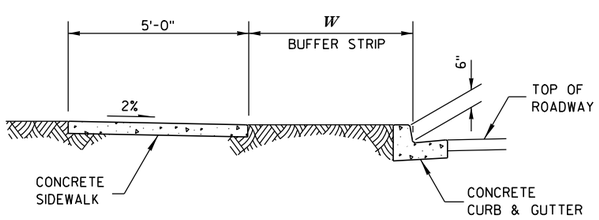

SECTION A-A

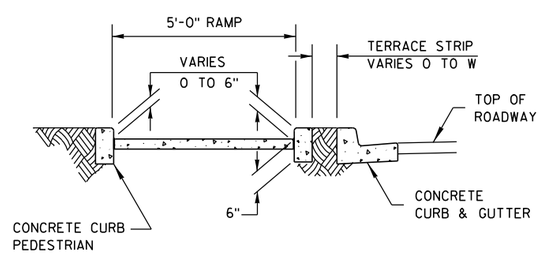

SECTION C-C

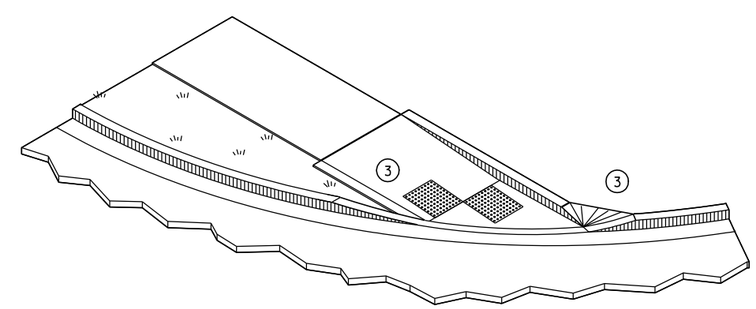

ISOMETRIC VIEW

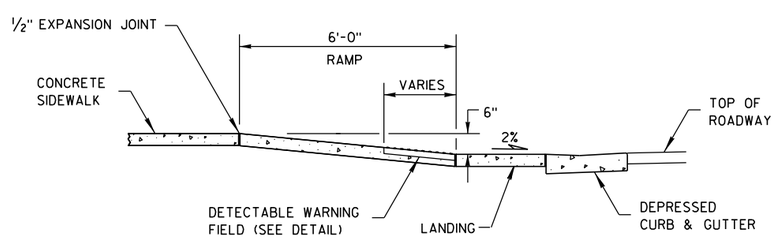

SECTION B-B

LEGEND

- ½" EXPANSION JOINT-SIDEWALK
- CONTRACTION JOINT FIELD LOCATED
- PAVEMENT MARKING CROSSWALK (WHITE)

CURB RAMPS TYPE 4B

STATE OF WISCONSIN
DEPARTMENT OF TRANSPORTATION

6

S.D.D. 8 D 5-14d

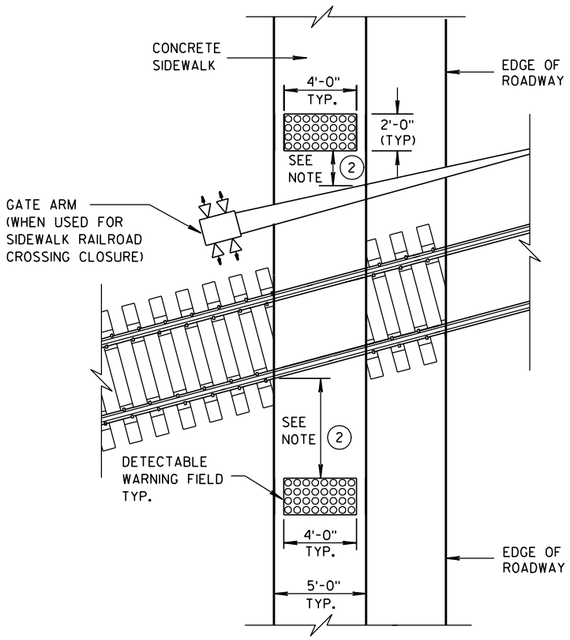

TYPE 8
DETECTABLE WARNINGS AT RAILROAD CROSSING

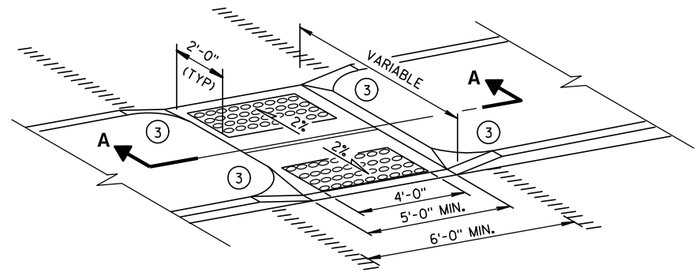

MEDIAN ISLAND
NON-ELEVATED CROSSING
TYPE 5

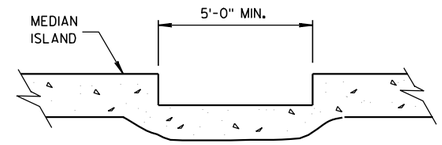

SECTION A-A

GENERAL NOTES

SIDEWALK CROSS SLOPE SHALL NOT EXCEED 2%.

1. SLOPE SIDEWALK TOWARD LANDING AS SHOWN WHERE THERE IS NO TERRACE OR WHERE THE TERRACE WIDTH IS LESS THAN 6 FEET WIDE.
2. THE EDGE OF THE DETECTABLE WARNING FIELD NEAREST TO A RAILROAD CROSSING SHALL BE 1.5 FEET ± 0.1' FROM THE FACE OF THE GATE ARM IF THE GATE ARM EXTENDS ACROSS THE SIDEWALK. WHERE THERE IS NO PEDESTRIAN GATE, THE EDGE OF THE DETECTABLE WARNING FIELD NEAREST TO THE RAILROAD CROSSING SHALL BE 15 FEET FROM THE NEAREST RAIL.
3. INSTALL TRANSITION NOSE. (INCIDENTAL TO OTHER PAY ITEMS.) DO NOT MARK TRANSITION NOSE.

LEGEND

- ½" EXPANSION JOINT-SIDEWALK
- CONTRACTION JOINT FIELD LOCATED
- PAVEMENT MARKING CROSSWALK (WHITE)

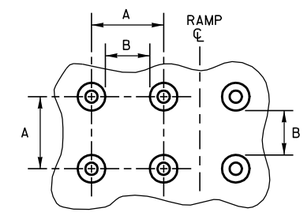

PLAN VIEW

	MIN.	MAX.
A	1.6"	2.4"
B	0.65"	1.5"
C	*	*
D	0.9"	1.4"

* THE C DIMENSION IS 50% TO 65% OF THE D DIMENSION.

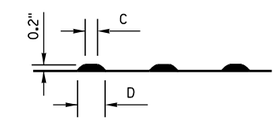

ELEVATION VIEW

TRUNCATED DOMES
DETECTABLE WARNING PATTERN DETAIL

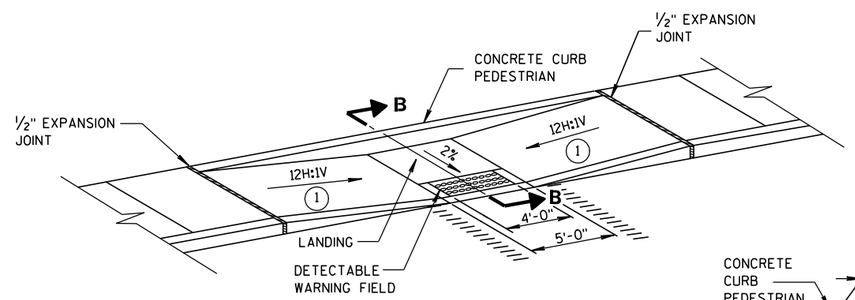

MID-BLOCK CROSSING
TYPE 7A

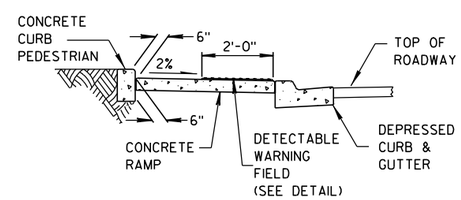

SECTION B-B

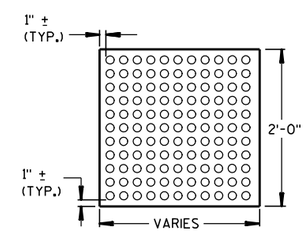

PLAN VIEW
DETECTABLE WARNING FIELD (TYPICAL)

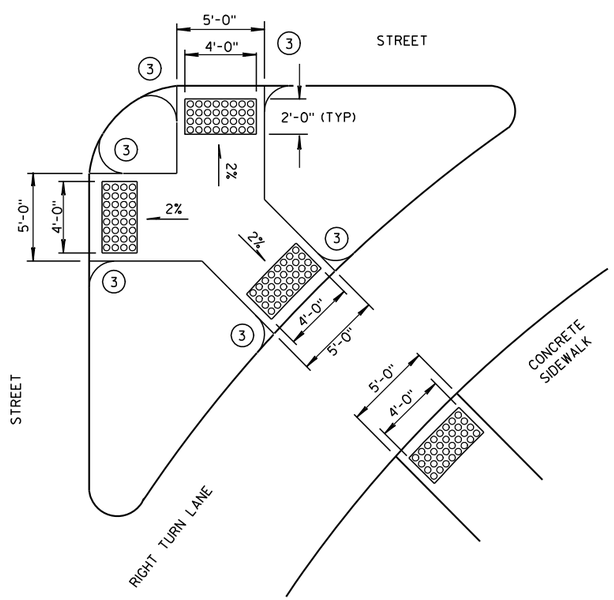

TYPE 6
DETECTABLE WARNING AT ISLANDS

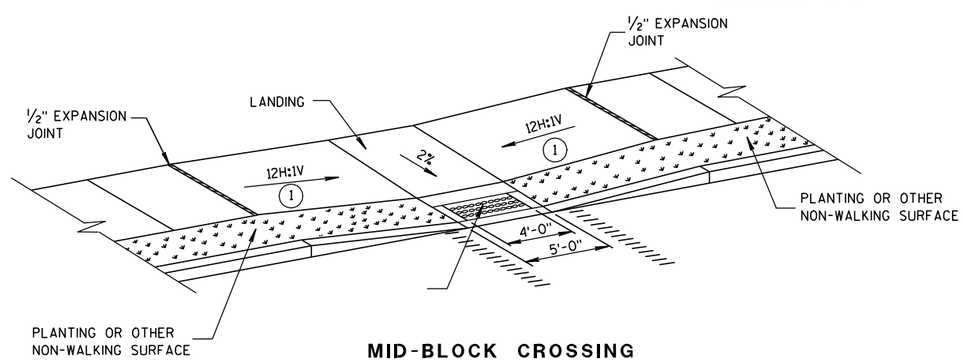

MID-BLOCK CROSSING
TYPE 7B

NOTE: THESE PARALLEL AND PARALLEL/PERPENDICULAR CURB RAMPS MAY BE USED AT INTERSECTIONS AND MID BLOCK LOCATIONS.

CURB RAMPS
TYPES 5, 6, 7A, 7B & 8

STATE OF WISCONSIN
DEPARTMENT OF TRANSPORTATION

APPROVED
2-9-10 DATE
/S/ Jerry H. Zogg ROADWAY STANDARDS ENGINEER
FHWA

6

S.D.D. 8 D 5-14e

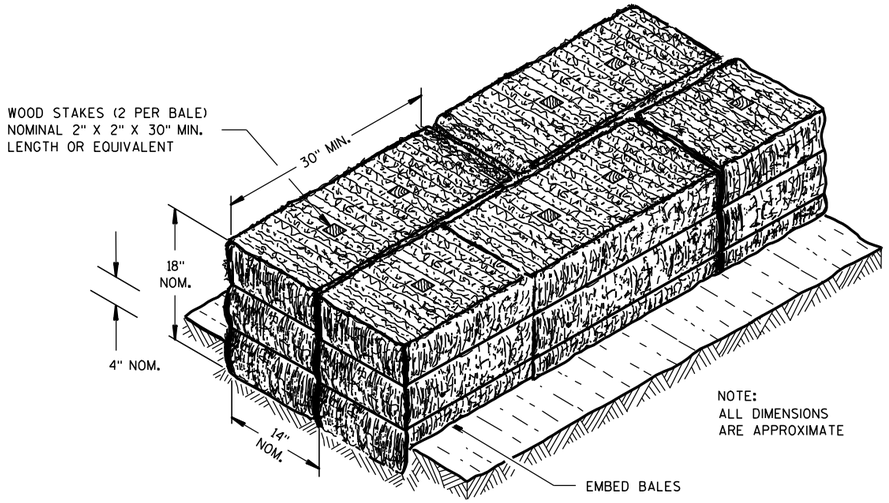

SECTION A-A

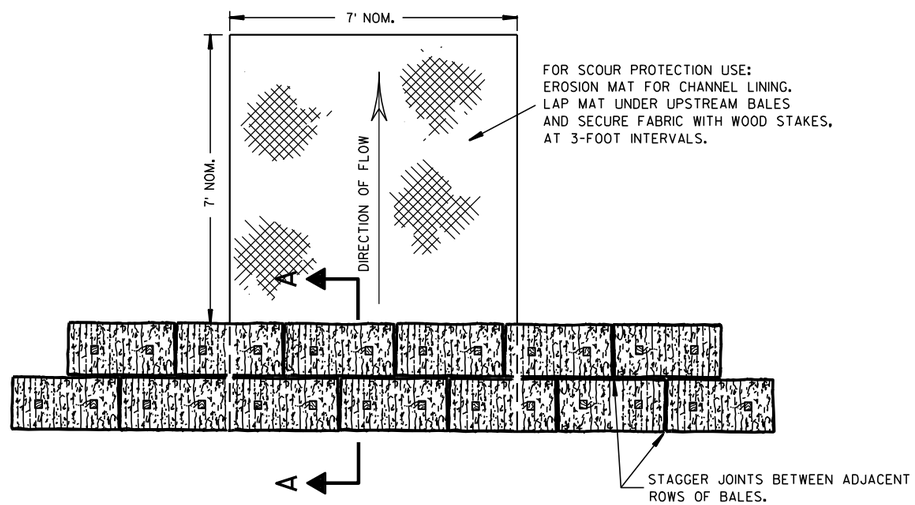

PLAN VIEW

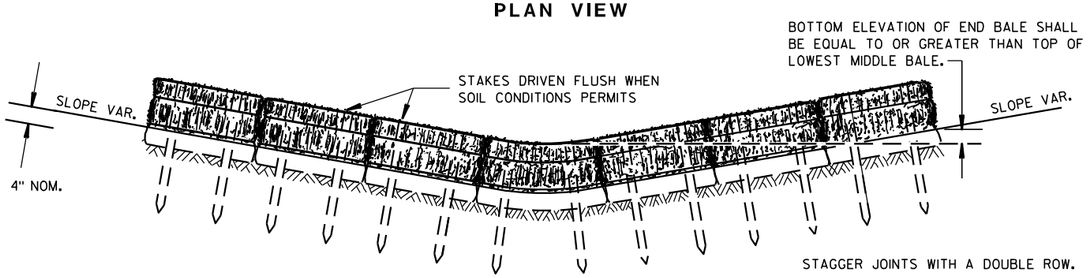

FRONT ELEVATION

TEMPORARY DITCH CHECK USING EROSION BALES ①

GENERAL NOTES

DETAILS OF CONSTRUCTION, MATERIALS AND WORKMANSHIP NOT SHOWN ON THIS DRAWING SHALL CONFORM TO THE PERTINENT REQUIREMENTS OF THE STANDARD SPECIFICATIONS AND THE APPLICABLE SPECIAL PROVISIONS.

① TEMPORARY DITCH CHECKS EITHER EROSION BALES OR MANUFACTURED SHALL BE PAID FOR UNDER THE BID ITEM OF TEMPORARY DITCH CHECK. THE DEPARTMENT WILL NOT PAY FOR TEMPORARY DITCH CHECKS CONSTRUCTED OF A SINGLE ROW OF EROSION BALES.

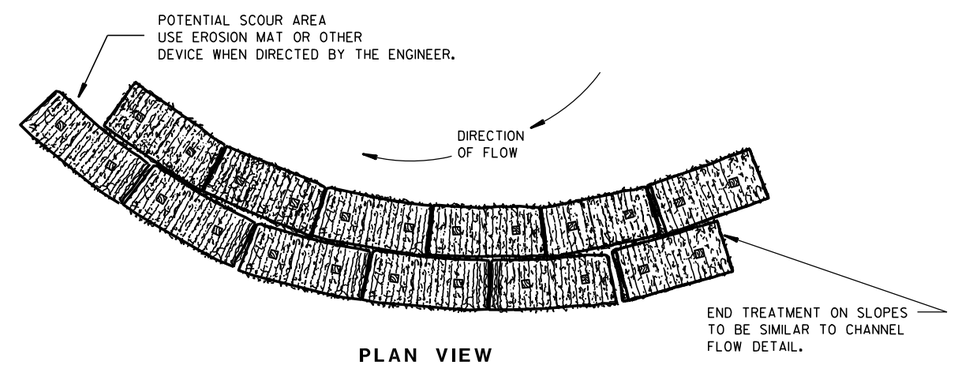

PLAN VIEW

WHEN ALTERING THE DIRECTION OF FLOW

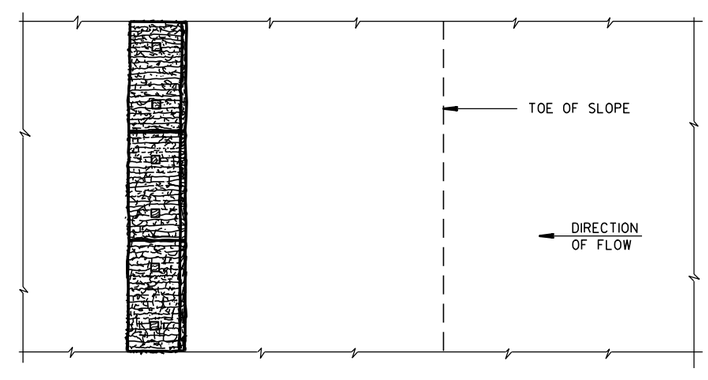

PLAN VIEW

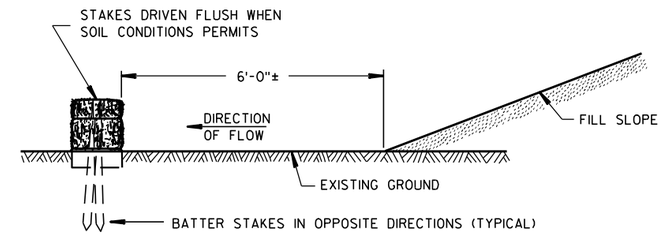

FRONT ELEVATION

WHEN EXISTING GROUND SLOPES AWAY FROM FILL SLOPE

EROSION BALES FOR SHEET FLOW

TYPICAL INSTALLATIONS OF EROSION BALES / TEMPORARY DITCH CHECKS

STATE OF WISCONSIN
DEPARTMENT OF TRANSPORTATION

APPROVED

6/04/02 — DATE

/S/ Beth Cann — CHIEF ROADWAY DEVELOPMENT ENGINEER

FHWA

6

6

S.D.D. 8 E 8-3

S.D.D. 8 E 8-3

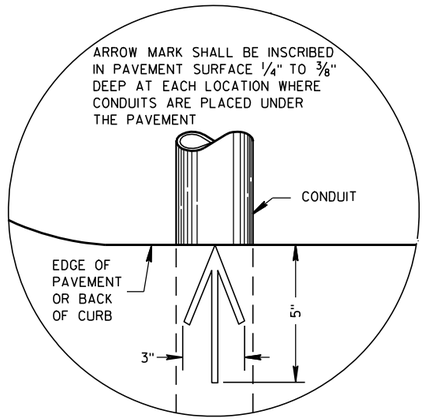

PLAN VIEW

ARROW MARK

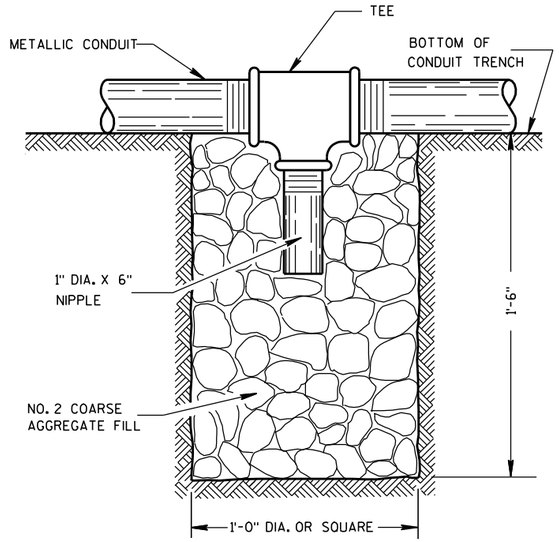

NOTE: INSTALL AT LOCATIONS WHERE METALLIC CONDUITS CANNOT BE PITCHED TO DRAIN INTO A PULL BOX.

DRAIN SUMP FOR METALLIC CONDUIT

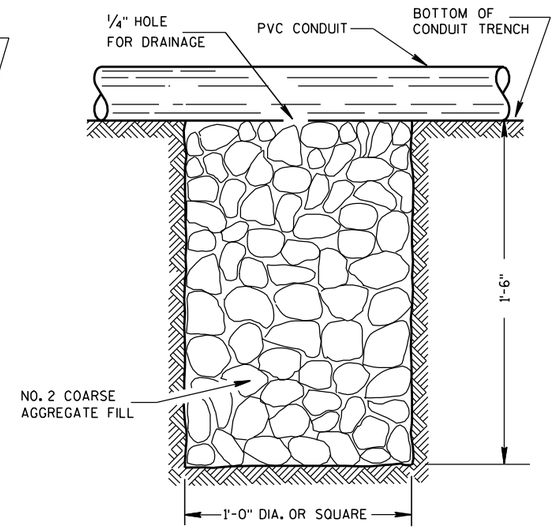

NOTE: INSTALL AT LOCATIONS WHERE PVC CONDUITS CANNOT BE PITCHED TO DRAIN INTO A PULL BOX.

DRAIN SUMP FOR PVC CONDUIT

GENERAL NOTES

DETAILS OF CONSTRUCTION, MATERIALS AND WORKMANSHIP NOT SHOWN ON THIS DRAWING SHALL CONFORM TO THE PERTINENT REQUIREMENTS OF THE CONTRACT.

METALLIC (STANDARD SPECIFICATION 652.2.2) OR NONMETALLIC (STANDARD SPECIFICATION 652.2.3) CONDUIT SHALL BE FURNISHED AND PLACED AS SHOWN.

DEPTH OF CONDUIT INSTALLED BELOW THE TRAVELED WAY SHALL BE 24 INCHES MINIMUM AND 36 INCHES MAXIMUM.

DEPTH OF CONDUIT INSTALLED THAT IS NOT BELOW THE TRAVELED WAY SHALL BE 18 INCHES MINIMUM AND 36 INCHES MAXIMUM.

ANY EXCEPTION TO THE MAXIMUM DEPTH SHALL BE ONLY WITH THE WRITTEN APPROVAL OF THE ENGINEER.

THE TRENCH SHALL NOT BE BACKFILLED PRIOR TO INSPECTION OF THE CONDUIT.

ALL METALLIC CONDUIT RACEWAY ENDS SHALL BE REAMED AND THREADED.

ALL METALLIC CONDUIT IN WHICH WIRE OR CABLE IS TO BE INSTALLED SHALL BE BUSHED WITH APPROVED THREADED BUSHINGS BEFORE INSTALLATION OF THE WIRE OR CABLE.

ALL METALLIC CONDUITS IN WHICH WIRE OR CABLE IS NOT TO BE INSTALLED SHALL BE CAPPED WITH THREADED PROTECTIVE CAPS, AS APPROVED BY THE ENGINEER.

ALL NONMETALLIC CONDUIT SHALL BE CAPPED OR PLUGGED IMMEDIATELY AFTER INSTALLATION AND SHALL REMAIN CAPPED OR PLUGGED UNTIL WIRE/CABLES ARE INSTALLED.

NONMETALLIC CONDUITS IN WHICH WIRE OR CABLE IS NOT BEING INSTALLED SHALL REMAIN CAPPED OR PLUGGED.

BENDING OF PVC ELECTRICAL CONDUIT SHALL BE ACCOMPLISHED BY USING A BLANKET OR EMERSION TYPE TANK DESIGNED FOR THE PURPOSE OF BENDING PVC ELECTRICAL CONDUIT.

ALL CUT ENDS SHALL BE TRIMMED INSIDE AND OUTSIDE TO REMOVE ALL ROUGH EDGES ON NONMETALLIC CONDUIT. (SEE NEC 347.5)

WHEN REQUIRED TO CONNECT NONMETALLIC CONDUIT TO METALLIC CONDUIT, ONLY U.L. LISTED ADAPTER FITTINGS SHALL BE USED.

PRIOR TO CONDUIT ACCEPTANCE, CONDUIT CAPS OR PLUGS SHALL BE REMOVED, AND THE CAPS, PLUGS AND CONDUIT ENDS SHALL BE THOROUGHLY CLEANED AND THEN THE CAPS OR PLUGS REINSTALLED TO ENSURE THAT THE CAPS OR PLUGS CAN BE EASILY REMOVED IN THE FUTURE.

ALL CONDUIT BEING FURNISHED AND INSTALLED SHALL HAVE THE U.L. LABEL FIRMLY ATTACHED.

CONDUIT RUNS SHALL BE THE SAME SIZE OF CONDUIT FROM ONE END TO THE OTHER (FROM PULL BOX TO PULL BOX-OR-JUNCTION BOX TO JUNCTION BOX-OR-BASE TO BASE, ETC.).

POLY ROPE OR A PULL WIRE SHALL BE INSTALLED AS STATED IN THE STANDARD SPECIFICATION, ITEM 652.3.1.1.

ALL CONDUIT RUNS SHALL BE STRAIGHT (WITHOUT BENDS) FROM PULL BOX TO PULL BOX, PULL BOX TO BASE AND BASE TO BASE AS SHOWN ON THE PLANS.

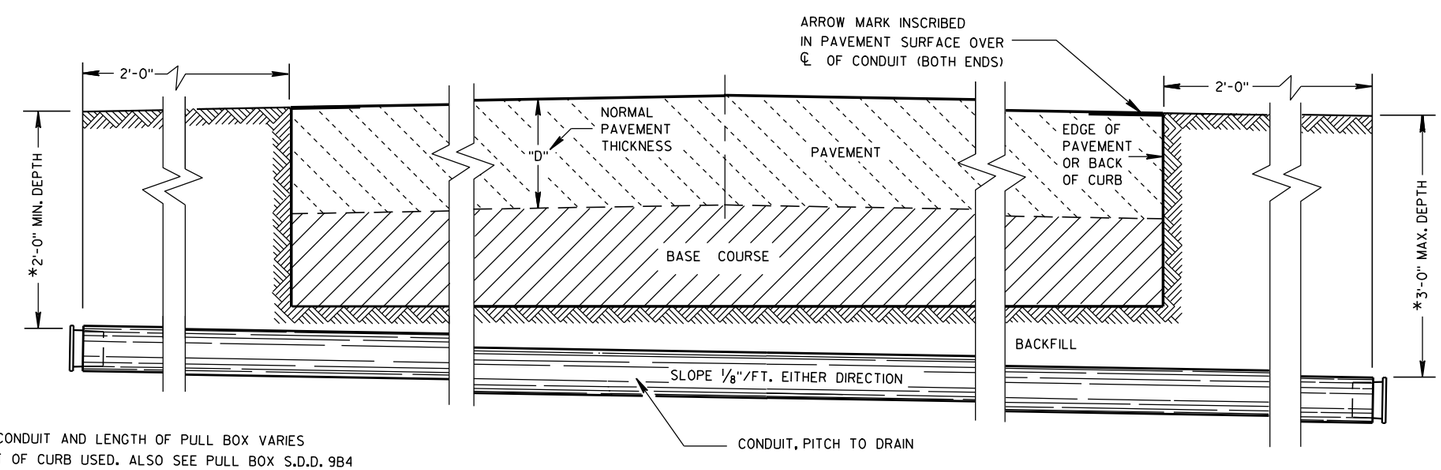

*DEPTH OF CONDUIT AND LENGTH OF PULL BOX VARIES WITH HEIGHT OF CURB USED. ALSO SEE PULL BOX S.D.D. 9B4

SIDE ELEVATION

DETAIL FOR CONDUIT UNDER PAVED HIGHWAYS

CONDUIT

STATE OF WISCONSIN
DEPARTMENT OF TRANSPORTATION

APPROVED

10/23/03	/S/ Balu Ananthanarayanan
DATE	STATE ELECTRICAL ENGI

FHWA

HWYS

6

S.D.D. 9 B 2-7

TABLE OF NOMINAL DIMENSIONS AND WEIGHTS

DIMENSION IN INCHES		CORRUGATED STEEL PIPE								
PIPE DIAMETER (INSIDE)	A	12	12	12	18	18	18	24	24	24
PIPE LENGTH **	B	24	30	36	24	30	36	36	42	48
WALL THICKNESS	C	0.064	0.064	0.064	0.064	0.064	0.064	0.064	0.064	0.064
COVER	D	10 1/4	10 1/4	10 1/4	16 1/4	16 1/4	16 1/4	22 1/4	22 1/4	22 1/4
FRAME	E	14 1/2	14 1/2	14 1/2	20 1/2	20 1/2	20 1/2	26 1/2	26 1/2	26 1/2
FRAME	F	8 1/2	8 1/2	8 1/2	14 1/2	14 1/2	14 1/2	20 1/2	20 1/2	20 1/2
FRAME	G	11 1/2	11 1/2	11 1/2	17 1/2	17 1/2	17 1/2	23 1/2	23 1/2	23 1/2
WEIGHT IN POUNDS *										
FRAME AND COVER		60	60	60	110	110	110	155	155	155

* THE ACTUAL WEIGHT OF THE MANHOLE FRAME AND COVER MAY VARY WITHIN 5 PERCENT PLUS OR MINUS OF THE WEIGHTS SHOWN.

** NORMALLY USED LENGTHS. THE PROJECT ENGINEER SHALL DETERMINE IF PIPE LENGTHS, OTHER THAN THOSE SPECIFIED, SHALL BE USED, TO A MAXIMUM OF 48" (CONTINUOUS LENGTH, NON-SPLICED). THE ADDITIONAL LENGTH SHALL BE INCIDENTAL TO THE PULL BOX BID PRICE.

GENERAL NOTES

DETAILS OF CONSTRUCTION, MATERIALS AND WORKMANSHIP NOT SHOWN ON THIS DRAWING SHALL CONFORM TO THE PERTINENT REQUIREMENTS OF THE CONTRACT.

ALL FRAMES AND COVERS SHALL BE HEAVY DUTY TYPE, SUITABLE FOR VEHICULAR TRAFFIC LOADS.

PULL BOXES LOCATED IN THE ROADWAYS SHALL HAVE LOCKING COVERS.

ENTRANCE HOLES INTO PULL BOXES SHALL BE CUT WITH A CIRCULAR HOLE SAW OR HYDRAULIC CONDUIT PUNCH. HOLE SIZE SHALL BE THE OUTSIDE DIAMETER OF THE CONDUIT THAT IS TO FIT IN THE OPENING PLUS NO MORE THAN 1/4".

THE CONTRACTOR SHALL NOT INSTALL WIRE IN ANY PULL BOX UNTIL ITS INSTALLATION HAS BEEN INSPECTED AND ACCEPTED BY THE ENGINEER.

GROUNDING LUGS (MECHANICAL CONNECTORS) SHALL BE U.L. LISTED AND APPROVED FOR USE WITH COPPER WIRE. THE MECHANICAL CONNECTION (INSIDE AND OUTSIDE) TO THE PULL BOX, SHALL BE TOTALLY AND PERMANENTLY SEALED WITH A SILICONE OR RUBBERIZED CAULKING COMPOUND AS APPROVED BY THE ENGINEER.

GROUNDING LUGS ARE NOT REQUIRED IN PULL BOXES WHEN VOLTAGES OF LESS THAN 50 VOLTS AC ARE THE ONLY VOLTAGES ENCOUNTERED IN THE BOXES.

ALL METALLIC CONDUIT IN WHICH WIRE AND/OR CABLE IS TO BE INSTALLED, SHALL BE BUSHED BEFORE INSTALLATION OF THE WIRE AND/OR CABLE.

S.D.D. 9B2, "CONDUIT", APPLIES TO THIS DRAWING.

WHEN PULL BOXES ARE INSTALLED FOR FUTURE USE, DO NOT INSTALL THE EQUIPMENT GROUNDING LUG. THE EQUIPMENT GROUNDING LUG, THE EQUIPMENT GROUNDING ELECTRODE AND THE EQUIPMENT GROUNDING CONDUCTOR SHALL BE REQUIRED AND INSTALLED UNDER A FUTURE WIRING CONTRACT.

IF PULL BOX EQUIPMENT GROUNDING IS REQUIRED USING AN EQUIPMENT GROUNDING ELECTRODE IN EACH PULL BOX, THE EQUIPMENT GROUNDING ELECTRODE SHALL BE 5/8" X 8'-0", COPPERCLAD AND BE EXOTHERMICALLY WELDED TO A #4 AWG, COPPER, STRANDED WIRE (BARE OR GREEN INSULATED). THE #4 AWG WIRE SHALL BE 4 FEET IN LENGTH, NEATLY COILED, TAPED AND AVAILABLE FOR USE WHEN REQUIRED.

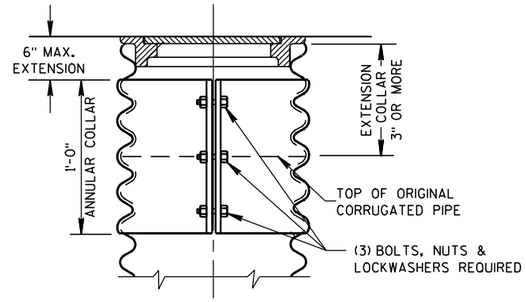

CORRUGATED PIPE EXTENDER

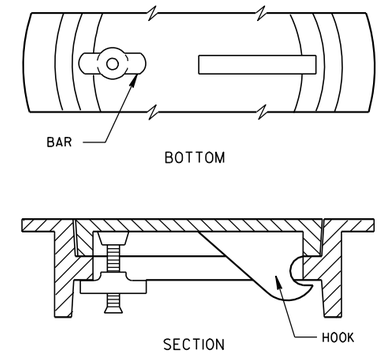

ALTERNATE COVER (LOCKING)

TIGHTENING BAR TYPE

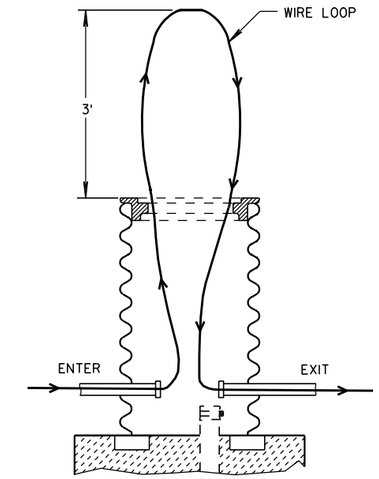

MEASUREMENT DETAIL FOR WIRE/CABLE IN THE PULL BOX

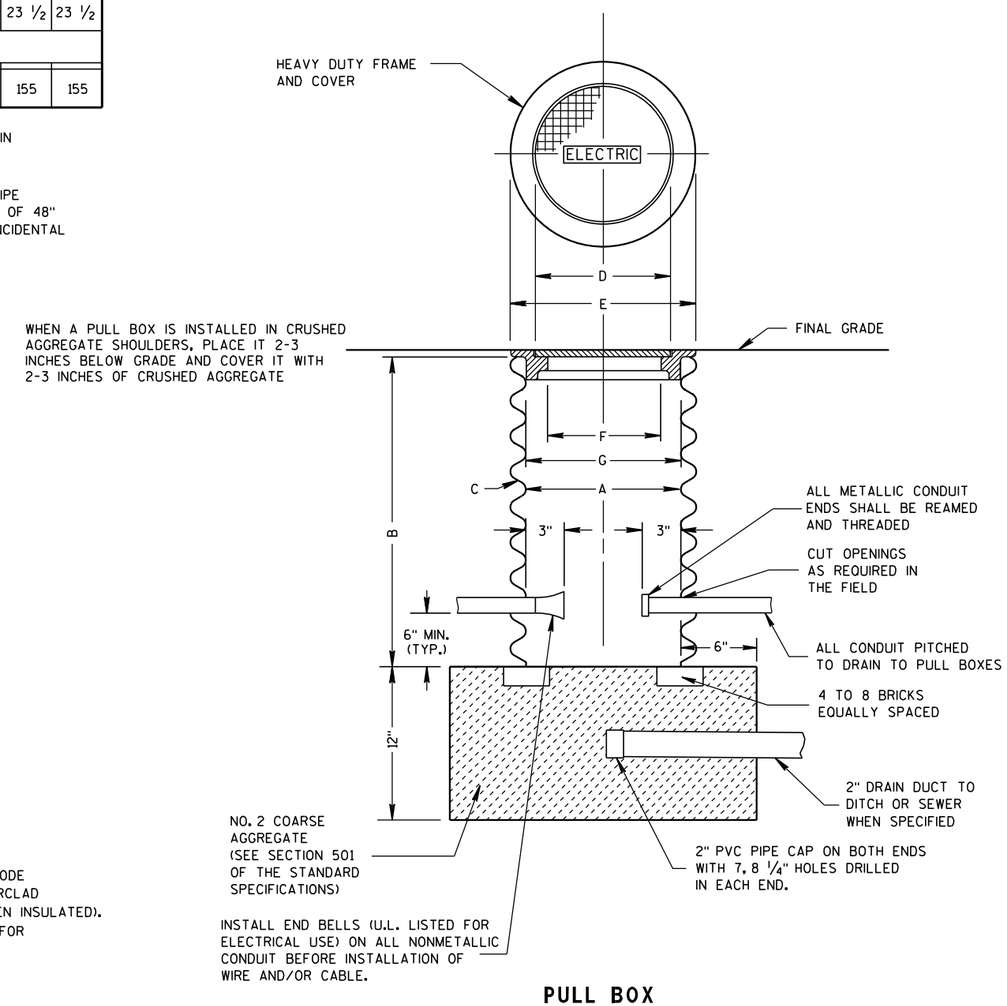

PULL BOX

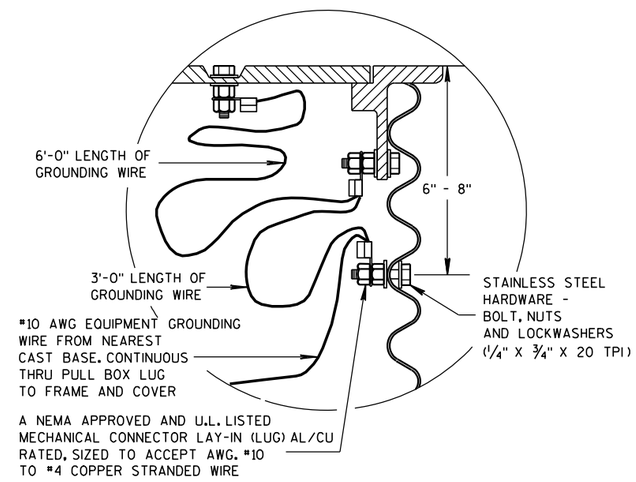

EQUIPMENT GROUNDING LUG AND LOCATION IN STEEL PULL BOXES

PULL BOX

STATE OF WISCONSIN
DEPARTMENT OF TRANSPORTATION

APPROVED
9/27/06 — DATE
/S/ Balu Ananthanarayanan — STATE ELECTRICAL ENGI
FHWA — HWYS

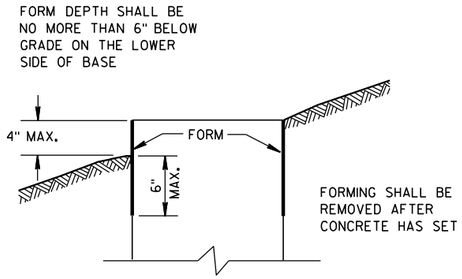

FORMING DETAIL

QUANTITY REQUIREMENTS	CONCRETE BASE TYPE		
	1	2	5
APPROX. CUBIC YARDS OF CONCRETE	0.40	0.57	0.40
LBS. OF HOOP BAR STEEL	NONE	23	16
LBS. OF VERTICAL BAR STEEL	NONE	60	18

GENERAL NOTES

DETAILS OF CONSTRUCTION, MATERIALS AND WORKMANSHIP NOT SHOWN ON THIS DRAWING SHALL CONFORM TO THE PERTINENT REQUIREMENTS OF THE CONTRACT.

BASES SHALL BE EXCAVATED BY USE OF A CIRCULAR AUGER.

TOP SURFACES OF CONCRETE BASES SHALL BE TROWEL FINISHED SMOOTH AND LEVEL.

CONDUIT SIZES AND LOCATIONS SHALL BE AS SHOWN ON THE PLANS.

THE FINAL OR TERMINATING CONCRETE BASE IN A CONDUIT RUN SHALL HAVE A 6" EXIT STUB INSTALLED FOR FUTURE CABLING USE. THE EXIT STUB SHALL BE SIZED AS USED THROUGHOUT THE CONDUIT RUN AS SHOWN AT THE ENTRANCE OF THE BASE.

MINIMUM BENDING RADIUS OF CONDUIT IS EQUAL TO 6 X THE DIAMETER.

CONDUIT HEIGHT ABOVE CONCRETE BASES SHALL BE 1 INCH. ALL METALLIC CONDUIT ENDS SHALL BE REAMED AND THREADED.

ALL CONDUIT ENDS AT THE TOP OF CONCRETE BASES SHALL BE CAPPED IF METALLIC OR PLUGGED IF NONMETALLIC IMMEDIATELY AFTER PLACEMENT AND BEFORE CONCRETE IS POURED. CONDUITS IN WHICH WIRE OR CABLE IS NOT INSTALLED SHALL REMAIN CAPPED OR PLUGGED.

GENERAL NOTES (CONTINUED)

BELL ENDS SHALL BE INSTALLED ON ALL PVC CONDUIT EXPOSED AT THE TOP OF CONCRETE BASES BEFORE INSTALLATION OF CABLE OR WIRE.

ENDS OF CONDUIT INSTALLED BELOW GRADE FOR FUTURE USE SHALL BE CAPPED IF METALLIC OR PLUGGED IF NONMETALLIC.

WHEN REQUIRED TO CONNECT NONMETALLIC CONDUIT TO METALLIC CONDUIT, ONLY ADAPTER FITTINGS, U.L. LISTED FOR ELECTRICAL USE, SHALL BE USED.

IF A BASE REQUIRES A DEEP FORM BECAUSE OF LOOSE DIRT OR FILL, THE FORM SHALL BE REMOVED BEFORE BACKFILLING AROUND THE BASE. BACKFILL SHALL BE TAMPED TIGHT AGAINST THE BARE CONCRETE BASE IN LAYERS OF 1 FOOT OR LESS.

A NO. 4 AWG, STRANDED COPPER EQUIPMENT GROUNDING CONDUCTOR SHALL BE EXOTHERMICALLY WELDED TO THE EQUIPMENT GROUNDING ELECTRODE (GROUND ROD) FOR TYPE 2 AND TYPE 5 BASES.

THE EQUIPMENT GROUNDING CONDUCTOR SHALL BE FURNISHED AND INSTALLED TO ENTER THE BASE OF THE TYPE 2 AND TYPE 5 BASES THROUGH A 1 INCH CONDUIT INSTALLED FOR GROUNDING PURPOSES, LEAVING A 4 FOOT COIL OF WIRE ABOVE THE CONCRETE BASE. THE EQUIPMENT GROUNDING CONDUCTOR SHALL BE NEATLY COILED AND THE COILS TIED TOGETHER.

ANCHOR RODS SHALL BE THREADED 12" IN LENGTH ON EACH END OF THE ROD. ANCHOR RODS SHALL BE MANUFACTURED IN ACCORDANCE WITH SECTION 654.2.1 AND 641.2.2 OF THE STANDARD SPECIFICATIONS, ASTM A-449, OR ASTM A-687 (GRADE 105).

WASHERS AND LOCK WASHERS ARE REQUIRED ON ALL ANCHOR RODS.

WHEN ANCHOR RODS USING THE ALTERNATE "L" BEND ARE FURNISHED, THE 4" "L" BEND SHALL BE IN ADDITION TO THE SPECIFIED ANCHOR ROD BAR LENGTH. THE "L" BEND END SHALL NOT BE THREADED.

ANCHOR RODS SHALL BE INSTALLED WITH MISALIGNMENTS OF LESS THAN 1:40 FROM VERTICAL.

WELDING OF THE ANCHOR RODS TO THE CAGE IS UNACCEPTABLE. TIE WIRES SHALL BE USED.

BAR STEEL REINFORCEMENT SHALL BE COATED WITH POWDERED EPOXY RESIN IN ACCORDANCE WITH SECTION 505 OF THE STANDARD SPECIFICATIONS (LATEST EDITION).

(1) THE MINIMUM DEPTH OF CONDUIT EXITING THE CONCRETE BASE AND INSTALLED BELOW THE TRAVELED WAY SHALL BE 24 INCHES. THE MINIMUM DEPTH OF CONDUIT EXITING THE CONCRETE BASE THAT IS NOT INSTALLED BELOW THE TRAVELED WAY SHALL BE 18 INCHES. THE MAXIMUM DEPTH OF ALL CONDUIT SHALL BE 36 INCHES EXCEPT WITH WRITTEN APPROVAL BY THE ENGINEER.

(2) (4) 1" DIA. X 3'-6" ANCHOR RODS.

(3) (4) 1" DIA. X 5'-0" ANCHOR RODS.

(4) (6) NO. 6 X 6'-8" BAR STEEL REINFORCEMENT.

(5) (7) NO. 4 X 5'-1" BAR STEEL REINFORCEMENT @ 1'-0" C-C.

(6) (4) 1" DIA. X 3'-6" ANCHOR RODS.

(7) (6) NO.4 X 4'-8" BAR STEEL REINFORCEMENT.

(8) (5) NO. 4 X 5'-1" BAR STEEL REINFORCEMENT @ 1'-0" C-C.

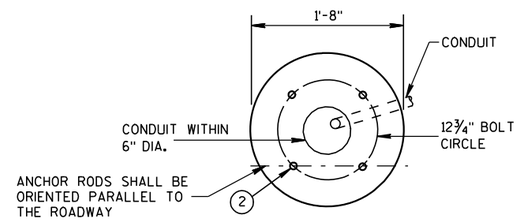

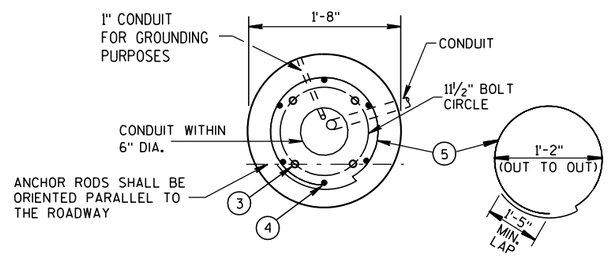

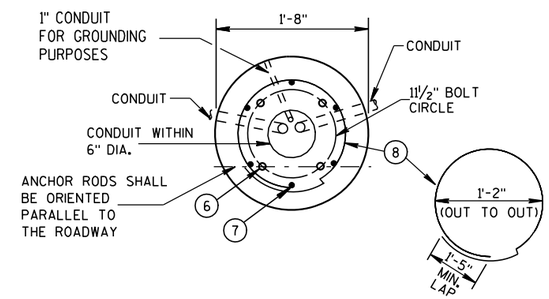

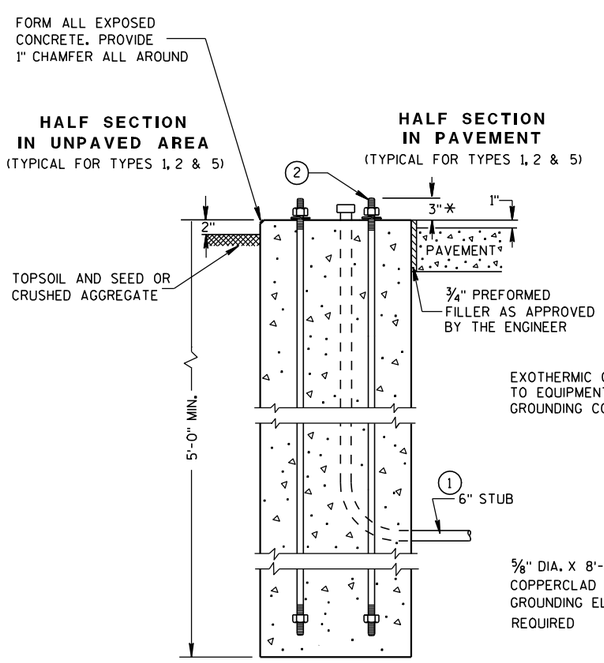

TYPE 1

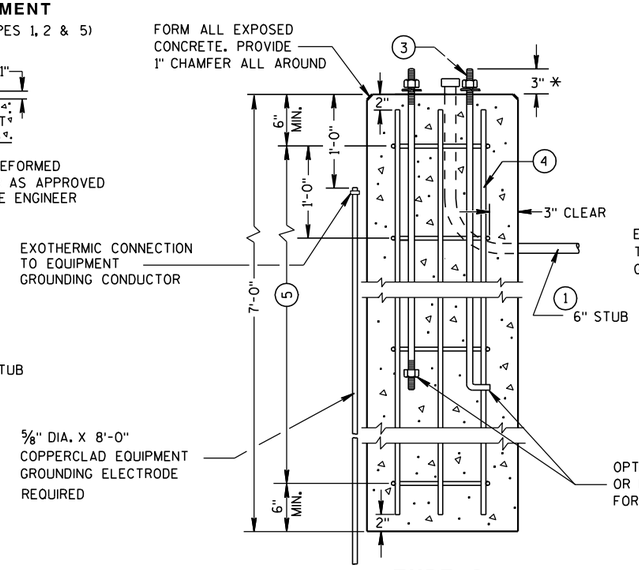

TYPE 2

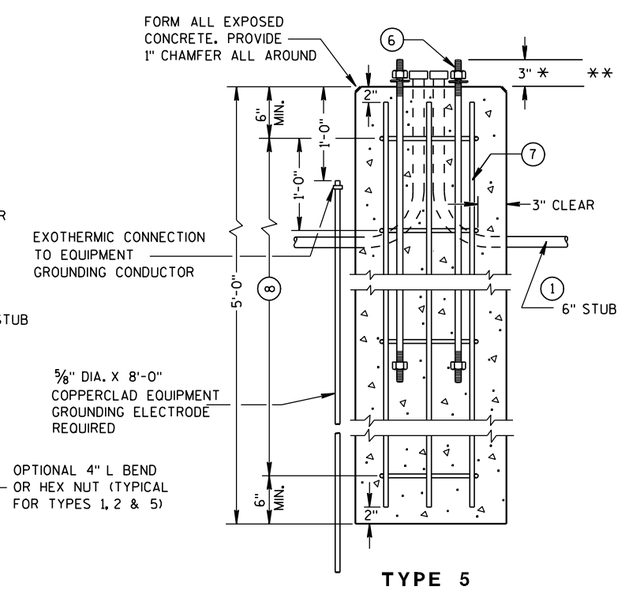

TYPE 5

CONCRETE BASES

* ANY ANCHOR ROD PROJECTION SHORTER THAN 2¾" OR LONGER THAN 3¼" SHALL REQUIRE THE BASE TO BE REMOVED AND REPLACED AT THE CONTRACTORS EXPENSE.

** FOR NONBREAKAWAY INSTALLATIONS, 4½" ± ANCHOR ROD PROJECTION WITH THE USE OF LEVELING NUTS. RODENT SCREEN REQUIRED.

CONCRETE BASES, TYPES 1, 2 & 5

STATE OF WISCONSIN
DEPARTMENT OF TRANSPORTATION

APPROVED

3/3/10	/S/ Joanna L. Rush	
DATE	STATE ELECTRICAL ENGI 74	HWYS

FHWA

6

S.D.D. 9 C 2-6

6

S.D.D. 9 C 2-6

*RISE FOR 4' ARM SHALL BE 2'-0".

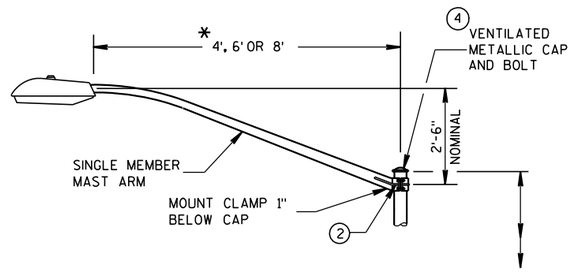

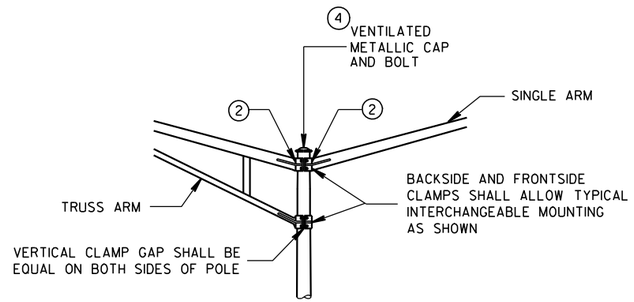

INTERCHANGEABLE MOUNTING DETAIL

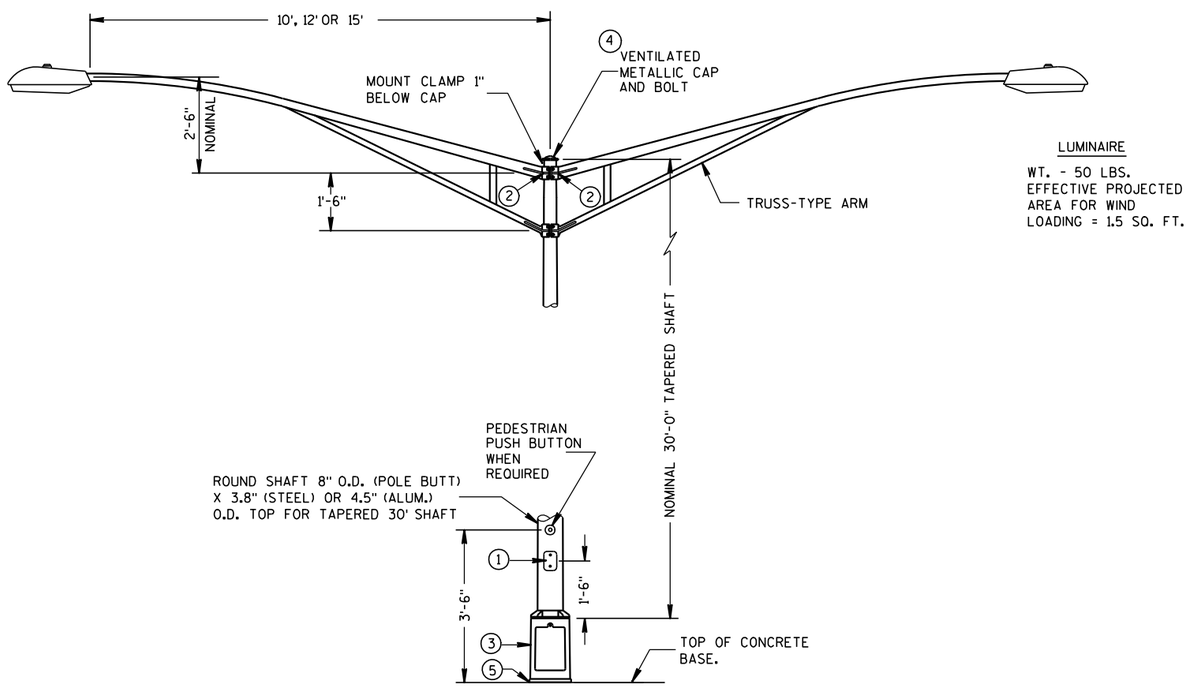

LUMINAIRE

WT. - 50 LBS.
EFFECTIVE PROJECTED
AREA FOR WIND
LOADING = 1.5 SQ. FT.

TYPE 5 POLE MOUNTING CONFIGURATION

(MAXIMUM LOAD)

LIGHTING ONLY

GENERAL NOTES

DETAILS OF CONSTRUCTION, MATERIALS AND WORKMANSHIP NOT SHOWN ON THIS DRAWING SHALL CONFORM TO THE PERTINENT REQUIREMENTS OF THE CONTRACT.

ALL TYPE 5 POLE MOUNTINGS SHALL BE DESIGNED TO INCLUDE TWIN 15' ARMS WITH LUMINAIRES.

POLES SHALL BE GALVANIZED STEEL OR ALUMINUM, AS CALLED FOR IN THE CONTRACT.

TYPE 5 ALUMINUM POLES SHALL BE CONSTRUCTED OF 6063-T6 ALUMINUM ALLOY. SLEEVING INSIDE THE POLE IS NOT ACCEPTABLE.

THE TYPE 5 ALUMINUM POLES SHALL HAVE A MINIMUM WALL THICKNESS OF 0.188".

TYPE 5 STEEL POLES SHALL HAVE A MINIMUM WALL THICKNESS OF U.S. STANDARD 11 GAGE (.1196").

THE SLIPFITTER END OF THE LUMINAIRE MAST ARM SHALL BE A NOMINAL 2⅜ INCHES IN OUTSIDE DIAMETER. THE STRAIGHT PORTION OF THE SLIPFITTER END OF THE LUMINAIRE ARM SHALL BE A NOMINAL 12 INCHES IN LENGTH.

WHEN TRANSFORMER BASES ARE USED, WIRE CONEECTIONS SHALL BE MADE IN THE TRANSFORMER BASE.

1. 4" x 6" REINFORCED HANDHOLE & COVER ASSEMBLY WITH 2 (TWO) ¼" X ¾" - 20 TPI HEX HEAD STAINLESS STEEL BOLTS.
2. GROMMETS, 1" CHASE NIPPLES OR 1" CLOSE CONDUIT NIPPLES WITH BUSHINGS SHALL BE PROVIDED FOR 1⅜" HOLE IN POLE SHAFT FOR WIRING.
3. CAST ALUMINUM TRANSFORMER BASE, WHEN REQUIRED.
4. FURNISH AND INSTALL VENTILATED, CAST, METALLIC (ALUMINUM ALLOY) CAPS. FASTEN CAPS WITH ONE (1) ¼" X ¾" - 20 TPI STAINLESS STEEL, HEX HEAD BOLT.
5. SHIMMING, IF NEEDED, SHALL BE LOCATED BETWEEN THE CONCRETE FOUNDATION AND THE TRANSFORMER BASE.

POLE MONTINGS FOR LIGHTING UNITS, TYPE 5 (30 FEET)

STATE OF WISCONSIN
DEPARTMENT OF TRANSPORTATION

6
S.D.D. 9 E 1-11d

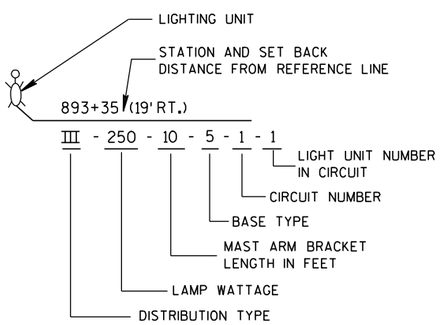

LIGHTING UNIT CODE
(TYPICAL)

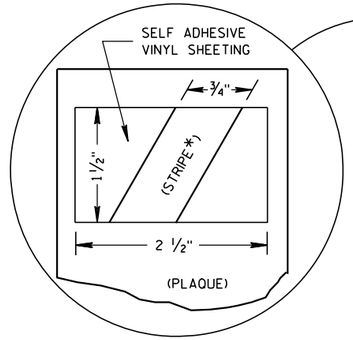

COLOR PATCH CODE FOR LUMINAIRES

(HIGH PRESSURE SODIUM)

1000 WATT - NO PATCH
400 WATT - ORANGE
310 WATT - BLUE
250 WATT - ORANGE W/WHITE STRIPE*
200 WATT - RED
150 WATT - GREEN
100 WATT - BROWN

(MERCURY VAPOR)

400 WATT - (NO PATCH)
250 WATT - YELLOW

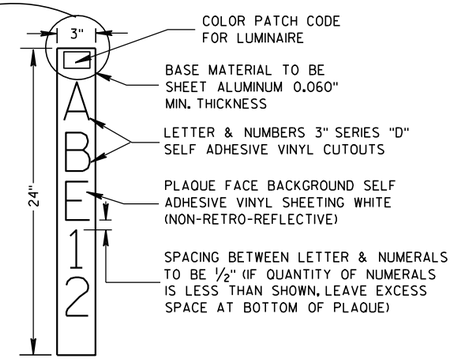

IDENTIFICATION PLAQUE

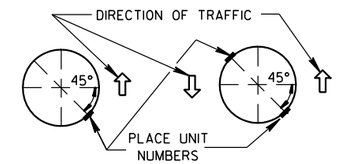

SINGLE ARM POLE MEDIAN POLE

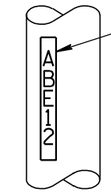

FASTEN TOP, CENTER AND BOTTOM OF PLAQUE WITH 3 ALUMINUM POP RIVETS (ALUM. POLES) OR STAINLESS STEEL POP RIVETS (STEEL POLES)

NOTES:

1) PLACE BOTTOM OF UNIT NUMBER PLAQUE 5'-0" ABOVE ELEVATION OF ADJACENT CURB OR SHOULDER.

2) UNIT NUMBERS: ONE REQUIRED FOR SINGLE ARM POLES TWO REQUIRED FOR MEDIAN MOUNT POLES.

LIGHTING UNIT IDENTIFICATION PLAQUE REQUIREMENTS AND PLACEMENT

(TYPICAL ALL LIGHTING UNITS)

FURNISH PLAQUE WHEN CALLED FOR BY SPECIAL PROVISIONS

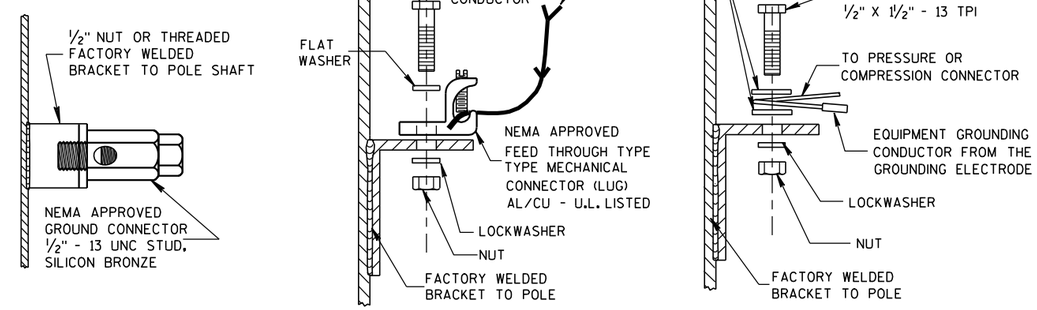

TYPICAL GROUNDING CONNECTIONS

NUT, BOLT AND WASHERS SHALL BE STAINLESS STEEL

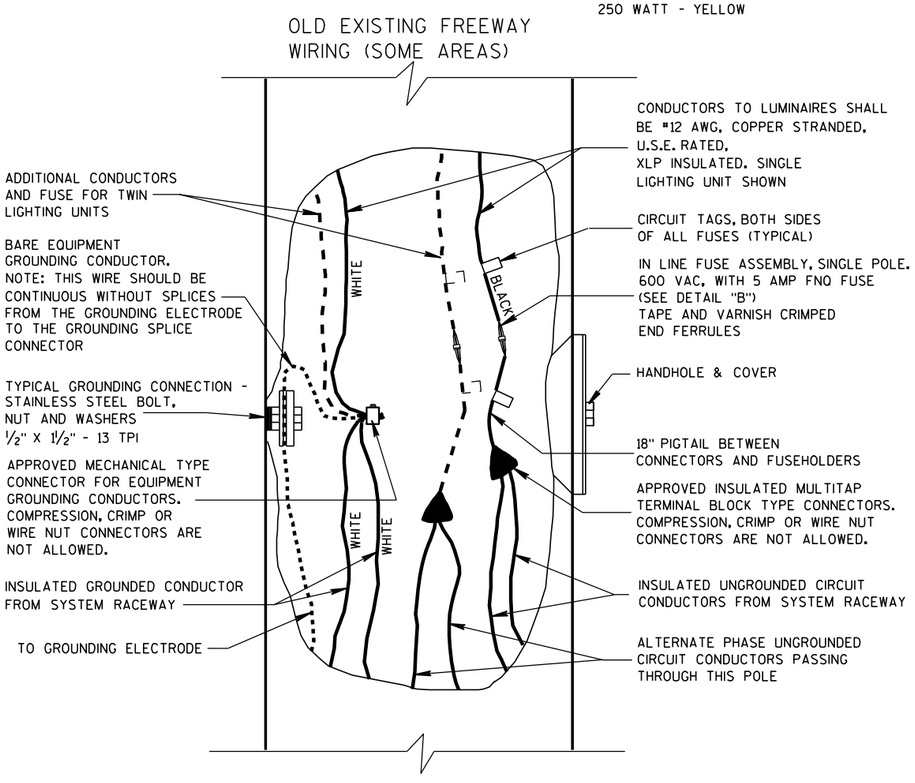

2 WIRE - 120, 240 OR 480 VAC TO GROUND

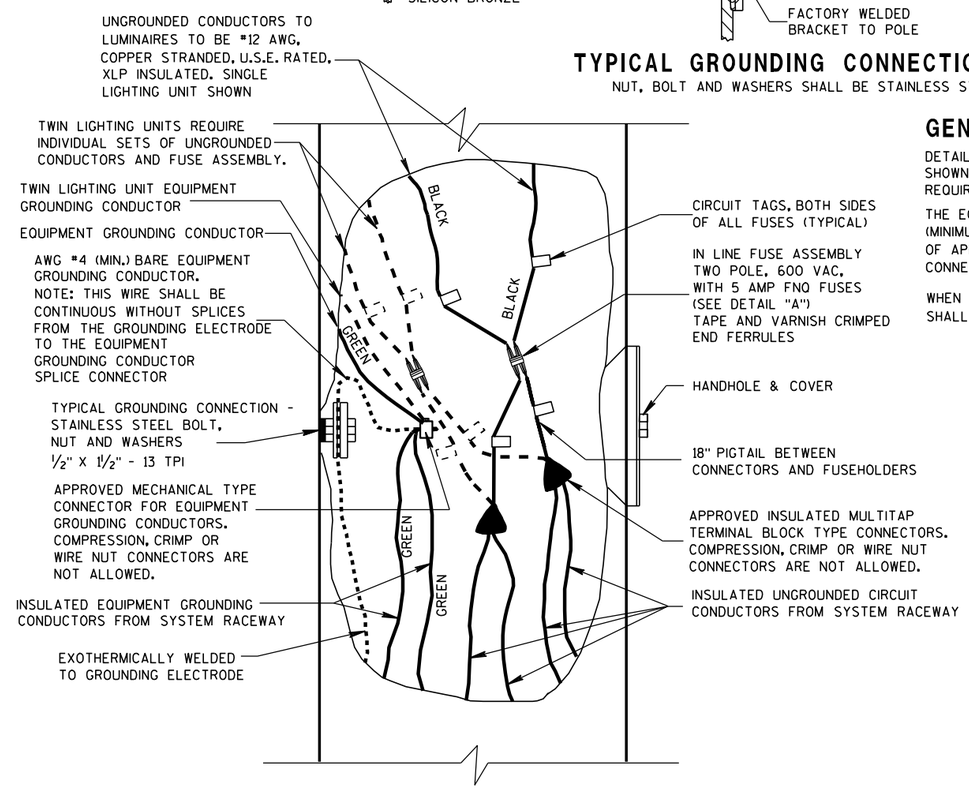

2 WIRE - 240 OR 480 VAC (UNGROUNDED CONDUCTORS) WITH EQUIPMENT GROUNDING CONDUCTOR

GENERAL NOTES

DETAILS OF CONSTRUCTION, MATERIALS AND WORKMANSHIP NOT SHOWN ON THIS DRAWING SHALL CONFORM TO THE PERTINENT REQUIREMENTS OF THE CONTRACT.

THE EQUIPMENT GROUND CONNECTOR SHALL BE TAPED WITH 3 WRAPS (MINIMUM) OF APPROVED RUBBER TAPE AND THEN 3 WRAPS (MINIMUM) OF APPROVED VINYL TAPE TO COVER SHARP WIRE ENDS AFTER THE CONNECTION IS COMPLETED.

WHEN TRANSFORMER BASES ARE USED, ALL WIRING CONNECTIONS SHALL OCCUR WITHIN THE TRANSFORMER BASES.

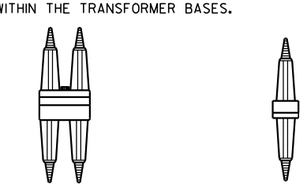

DETAIL "A"
BREAKAWY DOUBLE POLE WITH WATERPROOF INSULATING BOOT

DETAIL "B"
BREAKAWY SINGLE POLE WITH WATERPROOF INSULATING BOOT

FREEWAY LIGHTING UNIT POLE WIRING

STATE OF WISCONSIN
DEPARTMENT OF TRANSPORTATION

APPROVED
3/2/2011 — DATE
/S/ Thomas J. Gorrise — STATE ELECTRICAL ENGI
FHWA — 76 — HWYS

6

S.D.D. 9 E 2-3

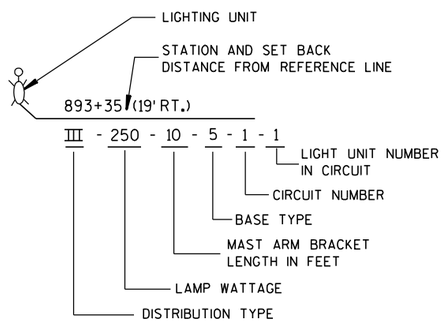

LIGHTING UNIT CODE
(TYPICAL)

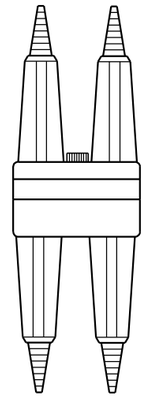

DETAIL "A"
BREAKAWY
DOUBLE POLE WITH
WATERPROOF
INSULATING BOOT

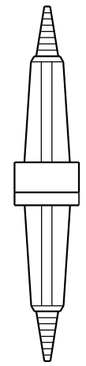

DETAIL "B"
BREAKAWY
SINGLE POLE WITH
WATERPROOF
INSULATING BOOT

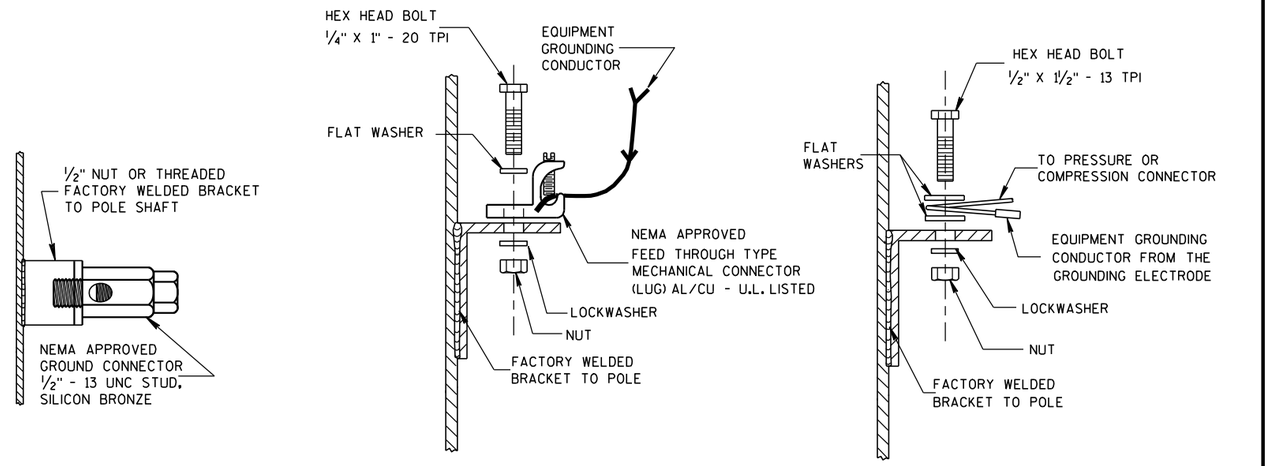

TYPICAL GROUNDING CONNECTIONS
NUT, BOLT, WASHERS AND LOCKWASHERS SHALL BE STAINLESS STEEL

GENERAL NOTES

DETAILS OF CONSTRUCTION, MATERIALS AND WORKMANSHIP NOT SHOWN ON THIS DRAWING SHALL CONFORM TO THE PERTINENT REQUIREMENTS OF THE CONTRACT.

THE EQUIPMENT GROUNDING CONNECTOR SHALL BE TAPED WITH 3 WRAPS (MINIMUM) OF APPROVED RUBBER TAPE AND THEN 3 WRAPS (MINIMUM) OF APPROVED VINYL TAPE TO COVER SHARP WIRE ENDS AFTER THE CONNECTION IS COMPLETED.

WHEN TRANSFORMER BASES ARE USED, ALL WIRING CONNECTIONS SHALL OCCUR WITHIN THE TRANSFORMER BASES.

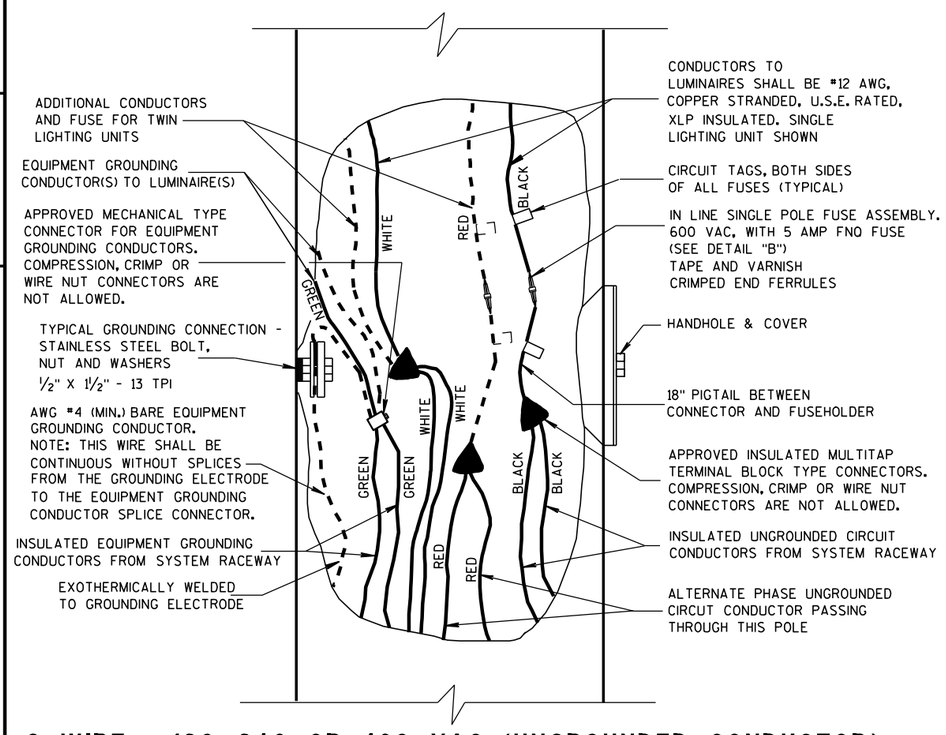

3 WIRE - 120, 240 OR 480 VAC (UNGROUNDED CONDUCTOR) WITH GROUNDED CONDUCTOR AND WITH EQUIPMENT GROUNDING CONDUCTOR

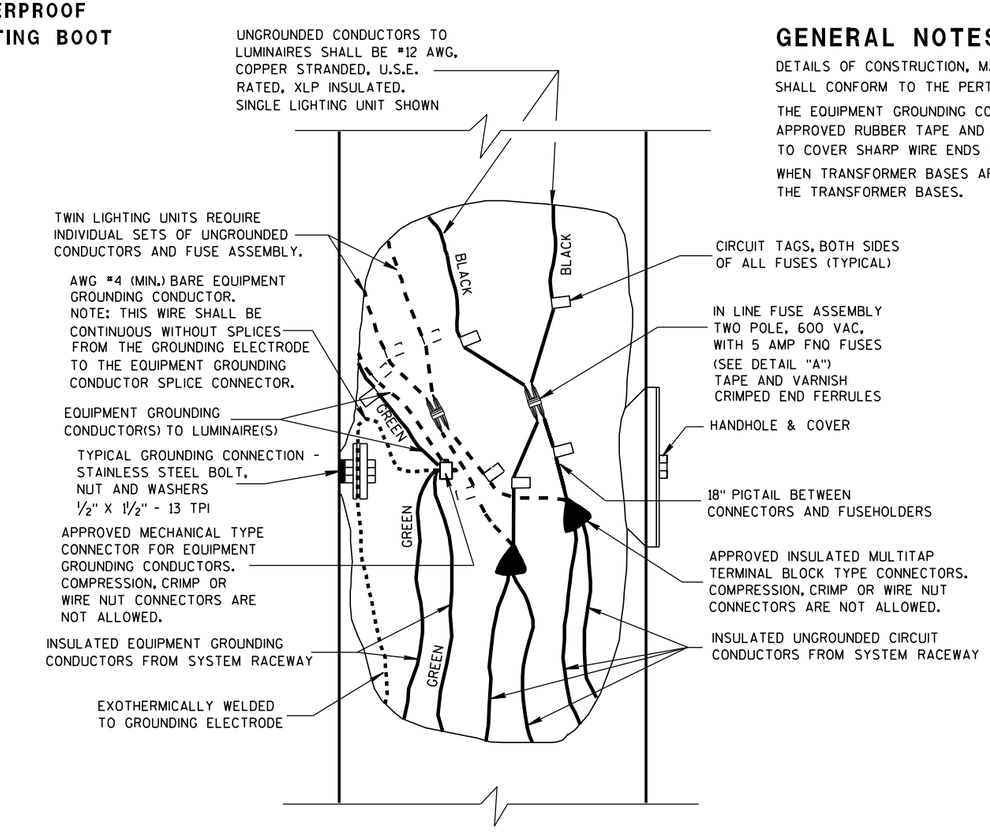

2 WIRE - 240 OR 480 VAC (UNGROUNDED CONDUCTORS) WITH EQUIPMENT GROUNDING CONDUCTOR

NON-FREEWAY LIGHTING UNIT POLE WIRING

STATE OF WISCONSIN
DEPARTMENT OF TRANSPORTATION

APPROVED
3/2/2011 — DATE
/S/ Thomas J. Gaspian — STATE ELECTRICAL ENGI 77 — HWYS
FHWA

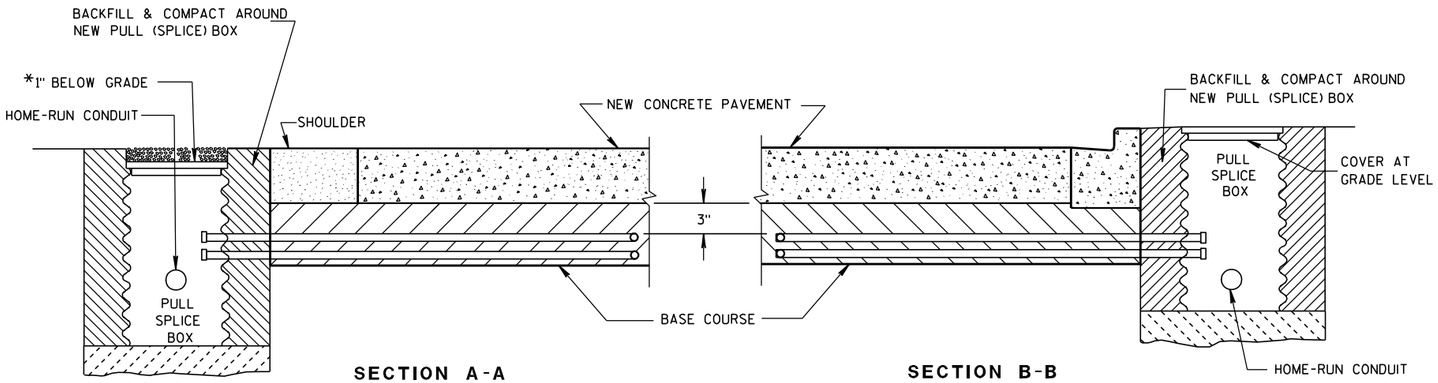

SECTION A-A
NO CURB & GUTTER

SECTION B-B
CURB & GUTTER

*RECESS PULL (SPLICE) BOX SO THAT THE COVER IS 3" BELOW GRADE IN SHOULDER AREAS OF CRUSHED AGGREGATE. BACKFILL OVER COVER WITH THE CRUSHED AGGREGATE TO BRING THE AREA TO GRADE LEVEL.

LOOP DETECTOR INSTALLATION DETAIL

GENERAL NOTES

DETAILS OF CONSTRUCTION, MATERIALS AND WORKMANSHIP NOT SHOWN ON THIS DRAWING SHALL CONFORM TO THE PERTINENT REQUIREMENTS OF THE CONTRACT.

LOOP SIZE, CONFIGURATION LOCATION, NUMBER OF TURNS OF WIRE AND ASSOCIATED SIGNAL PHASE SHALL BE AS SHOWN ON THE PLANS.

PITCH LEAD OUT CONDUIT TO DRAIN TO ROADSIDE PULL (SPLICE) BOX.

SPLICES SHALL BE INSTALLED BY USING CAST IN PLACE SPLICE KITS SUCH AS 3M TYPE 82A1 OR APPROVED EQUAL. NON-INSULATED BUTT SPLICES TO FIT #12 AWG STRANDED WIRE SHALL BE USED. SPLICES SHALL BE SOLDERED AND INSULATED FROM EACH OTHER AS PER INSTRUCTIONS INCLUDED IN THE SPLICE KIT.

MEASURE GROUND RESISTANCE USING A MEGGER. REPLACE LOOP WIRE NOT ATTAINING A READING OF INFINITY TO GROUND.

AFTER SPLICING THE LOOP WIRE TO THE LOOP LEAD-IN CABLE, THE CONTRACTOR SHALL MEASURE INDUCTANCE, GROUND RESISTANCE AND WIRE RESISTANCE AT THE CABINET END OF THE LEAD-IN CABLE AND FURNISH A COPY OF THE READINGS TO THE PROJECT ENGINEER FOR EVALUATION.

LOOP DETECTOR LEADS SHALL BE IDENTIFIED WITH THEIR ASSOCIATED LOOP BY USE OF WATERPROOF TAGS AT BOTH ENDS OF THE CABLE. A LISTING OF THE CABLE IDENTIFICATION PER INDIVIDUAL LOOP LEAD-IN SHALL BE PLACED IN THE CABINET.

THE #12 AWG. LOOP WIRE IN THE PULL (SPLICE) BOX SHALL BE HAND TWISTED AT LEAST 3 TWISTS PER FOOT BEFORE BEING SPLICED TO THE LOOP LEAD-IN CABLE.

SPLICES OF LOOP WIRE TO LEAD-IN CABLE SHALL BE MADE ONLY IN PULL (SPLICE) BOXES AT THE SIDE OF THE ROAD.

THE #12 AWG LOOP WIRE SHALL BE INSTALLED FROM THE ROADSIDE PULL (SPLICE) BOX, THROUGH THE LOOP CONDUIT, BACK TO THE ROADSIDE PULL (SPLICE) BOX, AND BE INSTALLED IN ONE, NON-SPLICED CONTINUOUS LENGTH.

PROTECTION OF THE CONDUITS IN THE BASE COURSE SHALL BE REQUIRED AFTER INSTALLATION AND BEFORE NEW PAVEMENT IS INSTALLED.

SHOULD INSTALLATION REPAIR BE REQUIRED, IT SHALL BE DONE UNDER THE DIRECTION OF THE PROJECT ENGINEER.

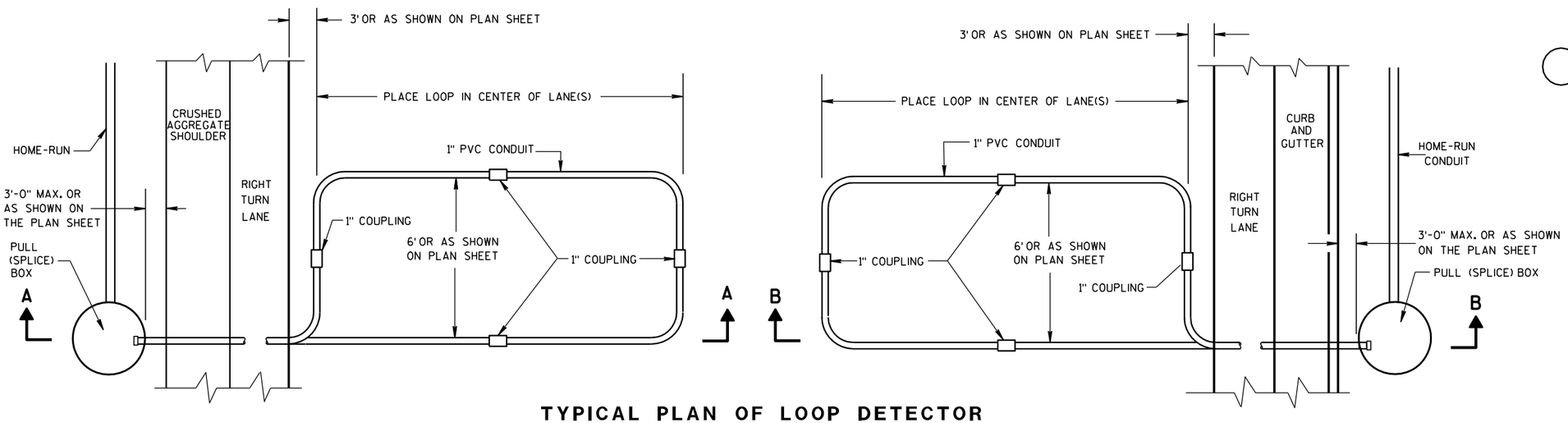

TYPICAL PLAN OF LOOP DETECTOR WITH 24" PULL (SPLICE) BOX

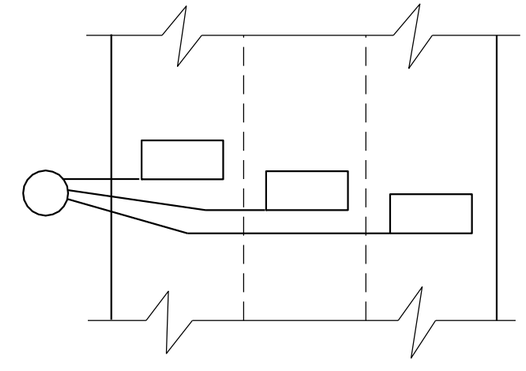

MULTI-LANE INSTALLATION

LOOP DETECTOR INSTALLED IN BASE COURSE WITH PULL (SPLICE) BOX OFF ROADWAY (OPTION 2)
STATE OF WISCONSIN DEPARTMENT OF TRANSPORTATION
APPROVED 6/7/06 DATE /S/ Balu Ananthanarayanan STATE ELECTRICAL ENGI HWYS FHWA

6
S.D.D. 9 F 15-3b

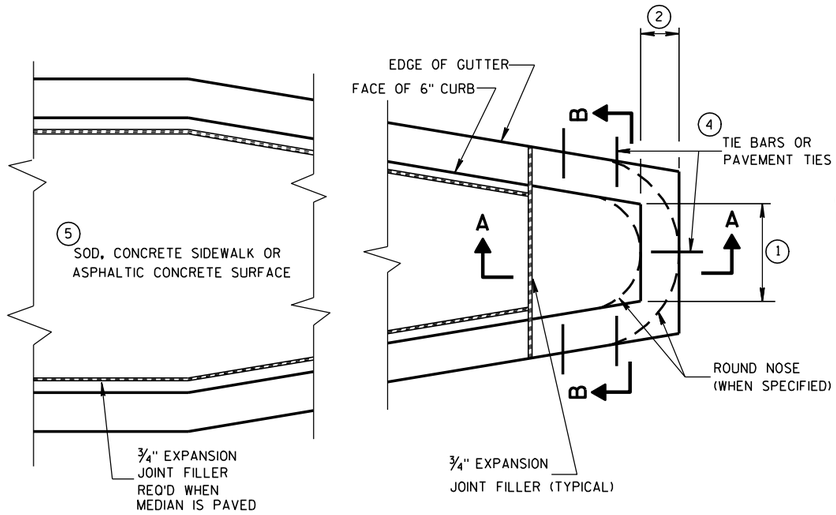

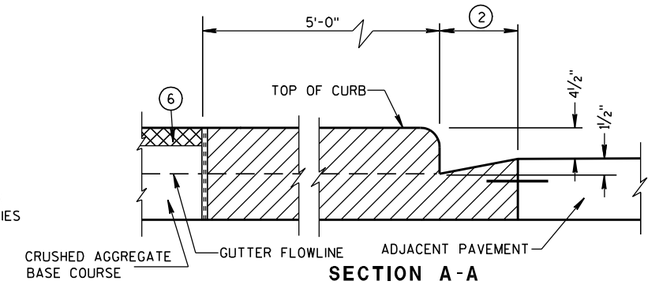

SECTION A-A

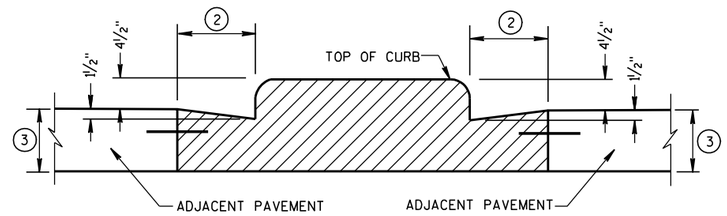

SECTION B-B

CONCRETE MEDIAN BLUNT NOSE DETAIL

GENERAL NOTES

DETAILS OF CONSTRUCTION, MATERIALS AND WORKMANSHIP NOT SHOWN ON THIS DRAWING SHALL CONFORM TO THE PERTINENT REQUIREMENTS OF THE STANDARD SPECIFICATIONS AND THE APPLICABLE SPECIAL PROVISIONS.

1. SEE PLAN FOR MEDIAN NOSE WIDTH AND RADIUS (FOR ROUND NOSE ALTERNATE).
2. WIDTH OF GUTTER TO MATCH EXISTING ADJACENT GUTTER OR AS SPECIFIED ELSEWHERE IN THE PLAN.
3. DEPTH EQUAL TO ADJACENT PAVEMENT. ADJACENT PAVEMENT STRUCTURE DETAILS ARE SHOWN ON THE PLAN. TYPICAL OPTIONS ARE:
   (1) NEW OR EXISTING CONCRETE PAVEMENT.
   (2) ASPHALTIC CONCRETE PAVEMENT OVER NEW OR EXISTING CONCRETE BASE COURSE.
   (3) ASPHALTIC CONCRETE PAVEMENT OVER CRUSHED AGGREGATE BASE COURSE.
4. TIE BARS OR PAVEMENT TIES REQUIRED IN NEW CONCRETE PAVEMENT OR CONCRETE BASE COURSE. TIE BARS SHALL BE NO. 4 X 2'-0" SPACED AT 2'-0" C-C.

   PAVEMENT TIES REQUIRED IN EXISTING CONCRETE BASE COURSE. PAVEMENT TIES SHALL BE NO. 6 X 1'-0" SPACED AT 3'-0" C-C INSTALLED ON A HORIZONTAL SKEW OF 6:1. THE DIRECTION OF SKEW SHALL ALTERNATE AFTER EVERY ONE OR TWO BARS.
5. SURFACE TYPE AND DETAILS ARE SHOWN ELSEWHERE IN THE PLAN.

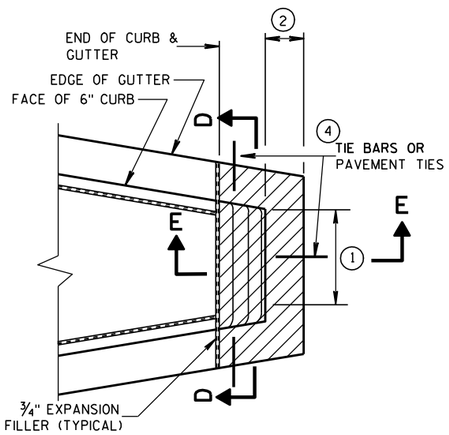

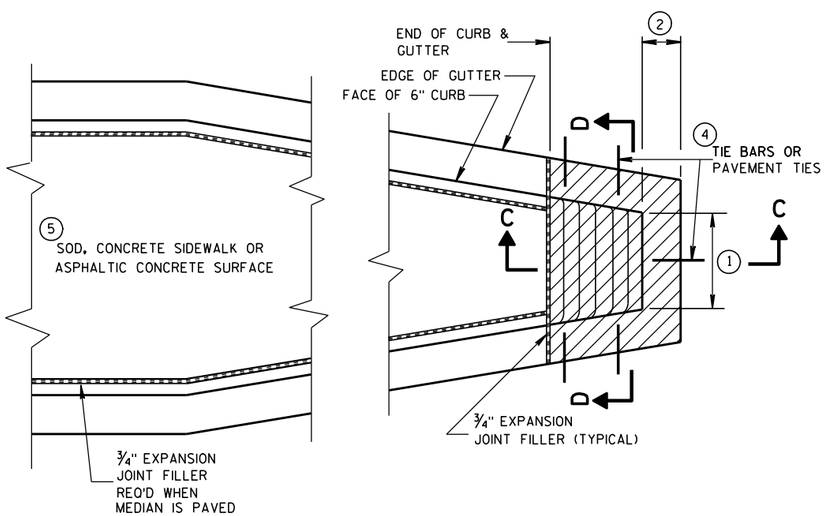

CONCRETE MEDIAN SLOPED NOSE TYPE 1

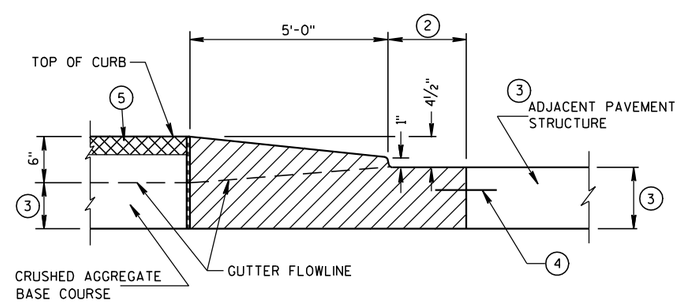

SECTION C-C

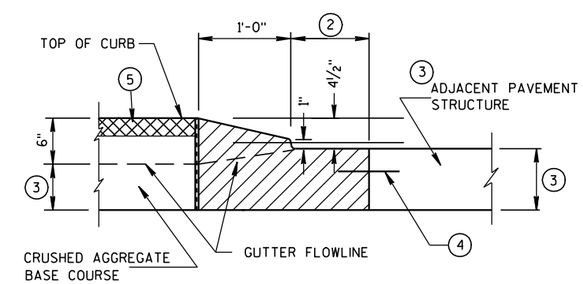

SECTION E-E

CONCRETE MEDIAN SLOPED NOSE TYPE 2

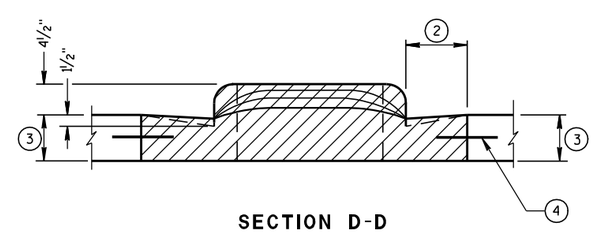

SECTION D-D

CONCRETE MEDIAN NOSE	
STATE OF WISCONSIN DEPARTMENT OF TRANSPORTATION	
APPROVED 6/8/2006 DATE	/S/ Jerry H. ---- ROADWAY STANDARDS ENGINEER
FHWA	NT

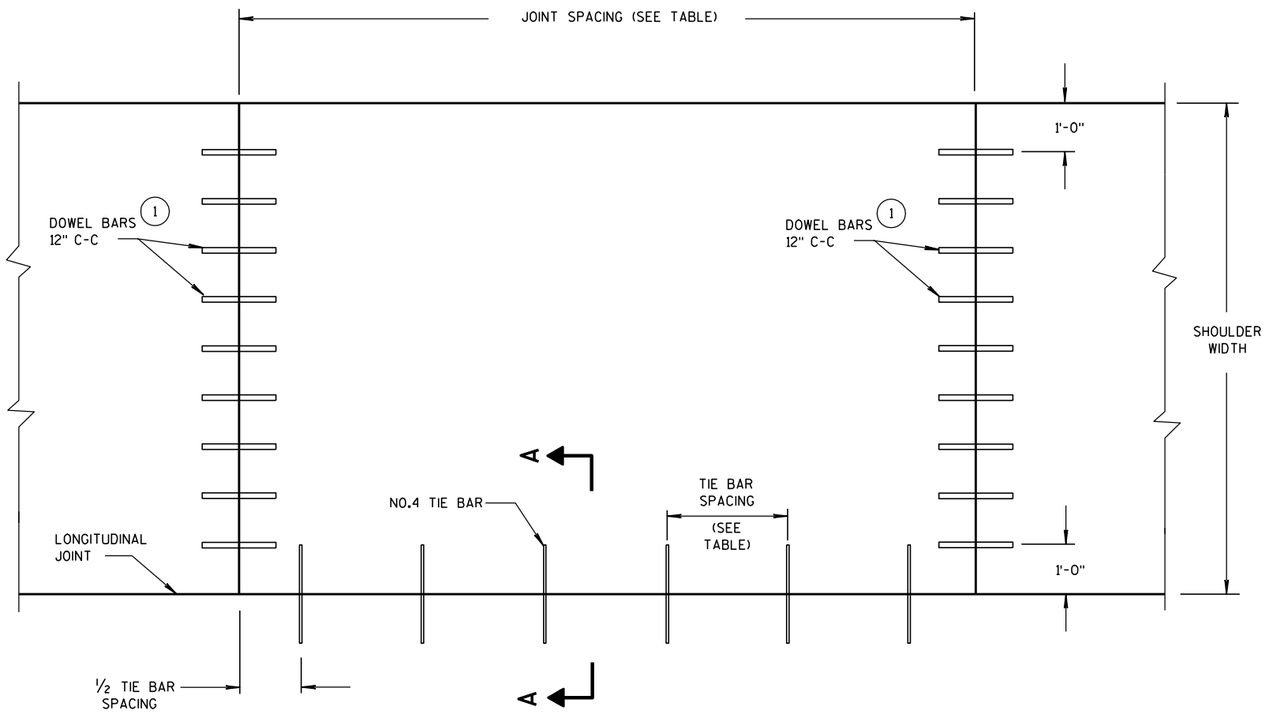

PLAN VIEW

CONCRETE PAVEMENT SHOULDER

GENERAL NOTES

DETAILS OF CONSTRUCTION, MATERIALS AND WORKMANSHIP NOT SHOWN ON THIS DRAWING SHALL CONFORM TO THE PERTINENT REQUIREMENTS OF THE STANDARD SPECIFICATIONS AND THE APPLICABLE SPECIAL PROVISIONS.

TRANSVERSE JOINT DETAILS ARE SHOWN ELSEWHERE IN THE PLAN.

FINISH THE SHOULDER PAVEMENT CONFORMING TO SUBSECTION 415.3.8 OF THE STANDARD SPECIFICATIONS.

TIE BARS SHALL CONFORM TO SUBSECTION 505.2.4 OF THE STANDARD SPECIFICATIONS.

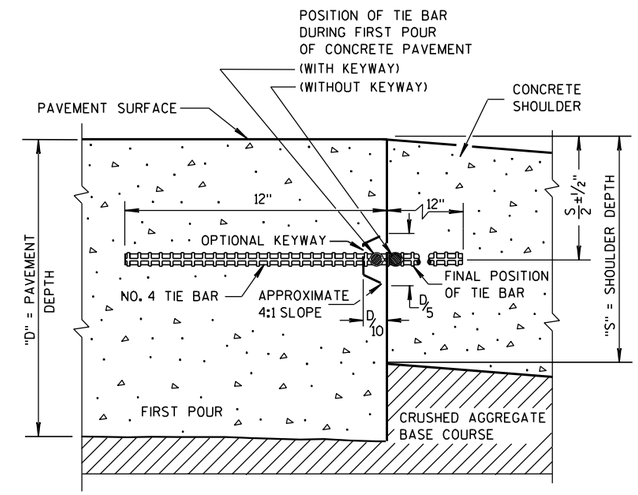

SECTION A-A

LONGITUDINAL CONSTRUCTION JOINT

PAVEMENT TYPE OF TRAFFIC LANES	TIE BAR SPACING	SHOULDER JOINT SPACING
NON-REINFORCED	30"	MATCH JOINT SPACING OF ADJACENT TRAFFIC LANE
CONTINUOUSLY REINFORCED	30"	15' FOR 6' TO 10' WIDE SHOULDERS
CONTINUOUSLY REINFORCED	36"	12' FOR 3' WIDE SHOULDERS

(1) **PAVEMENT DEPTH, DOWEL BAR SIZE AND JOINT SPACING TABLE**

PAVEMENT DEPTH (D)	DOWEL BAR DIAMETER	CONTRACTION JOINT SPACING
5 ½", 6", 6 ½"	NONE	12'
7", 7 ½"	1"	14'
8", 8 ½"	1¼"	15'
9", 9 ½"	1¼"	15'
10" & ABOVE	1½"	15'

FOR DOWELED CONCRETE SHOULDERS WITH TRAPEZOIDAL CROSS SECTIONS, CHOSE THE APPROPRIATE DOWEL BAR DIAMETER BASED ON THE SMALLER PAVEMENT DEPTH (LIKELY THE OUTSIDE EDGE OF THE SHOULDER). IF USING BASKETS, USE BASKETS FOR THE AVERAGE THICKNESS OF THE CROSS SECTION.

CONCRETE PAVEMENT SHOULDERS

STATE OF WISCONSIN
DEPARTMENT OF TRANSPORTATION

APPROVED
8/15/2011 — DATE
/S/ Deb Bischoff — PAVEMENT POLICY & D 80 INEER
FHWA

6
S.D.D. 13 A 3-5

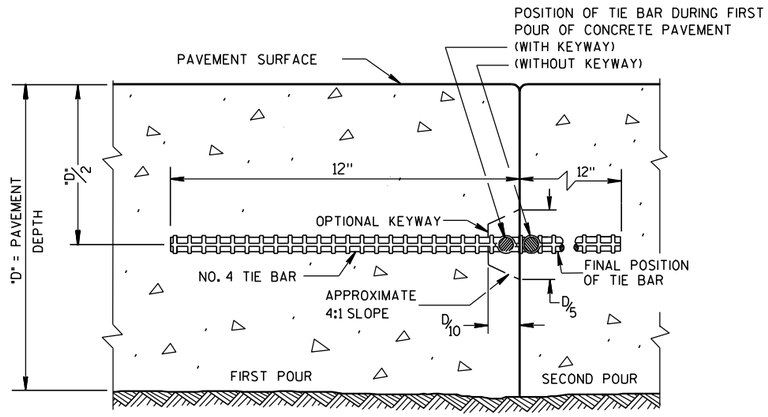

CONSTRUCTION JOINT

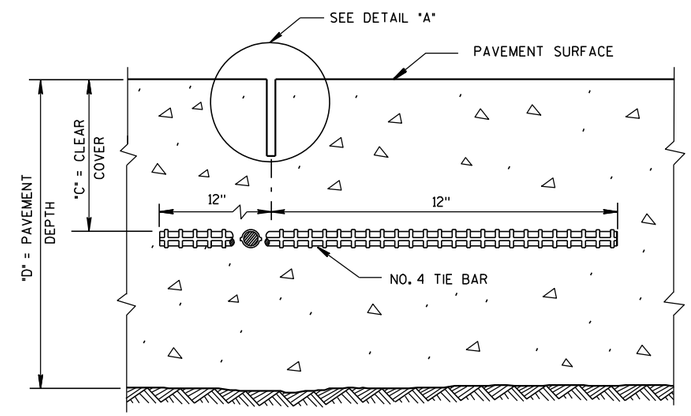

SAWED JOINT

GENERAL NOTES

DO NOT SEAL OR FILL LONGITUDINAL JOINTS.

CREATE A LONGITUDINAL JOINT FOR PAVEMENT WIDTHS GREATER THAN 15 FEET.

CORRELATE LONGITUDINAL JOINTS WITH LANE LINES WHEN POSSIBLE.

(1) ANCHOR TIE BARS INTO DRILLED HOLES WITH AN EPOXY.

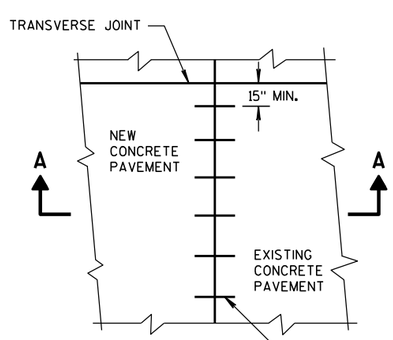

PLAN VIEW

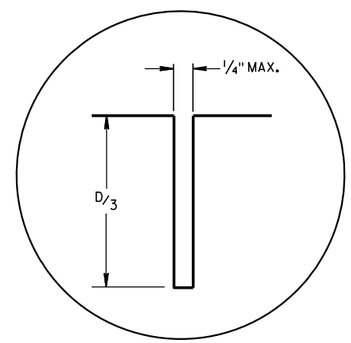

DETAIL "A"

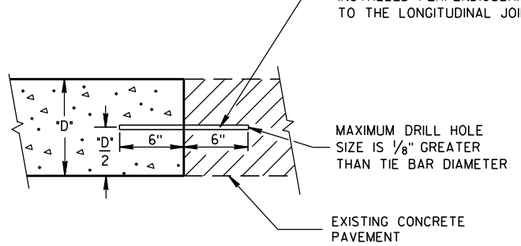

SECTION A-A
LONGITUDINAL CONSTRUCTION JOINT TIE BARS ANCHORED INTO EXISTING PAVEMENT

PAVEMENT DEPTH "D"	CLEAR COVER "C"	MAXIMUM TIE BAR SPACING "S"	
		PAVEMENT WIDTH	
		24' OR 26'	≥30'
6, 6 1/2"	3"±1/2"	48"	42"
7, 7 1/2"	3 1/4"±1"	45"	36"
8, 8 1/2"	3 3/4"±1"	39"	30"
9, 9 1/2"	4 1/4"±1"	33"	27"
10, 10 1/2"	4 3/4"±1"	30"	24"
11, 11 1/2"	5 1/4"±1"	27"	21"
12"	5 3/4"±1"	24"	21"

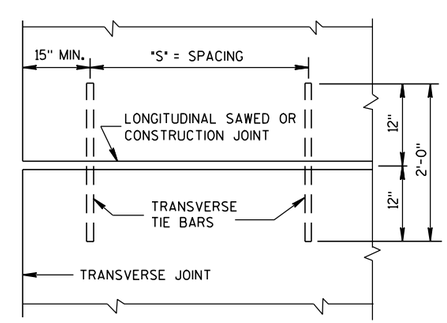

PLAN VIEW
SHOWING LOCATION OF TIE BARS

CONCRETE PAVEMENT LONGITUDINAL JOINTS AND TIES

STATE OF WISCONSIN
DEPARTMENT OF TRANSPORTATION

APPROVED
10-5-2010 — DATE
/S/ Deb Bischoff — PAVEMENT POLICY & DESIGN ENGINEER
FHWA

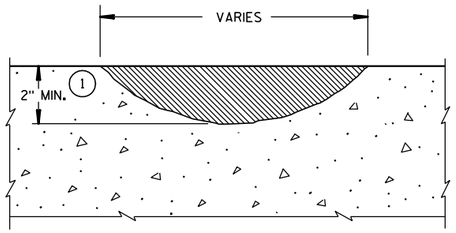

PROFILE VIEW

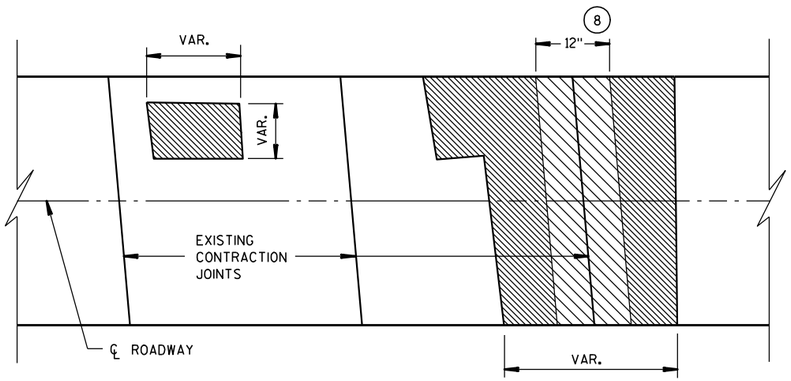

PLAN VIEW

SURFACE REPAIR

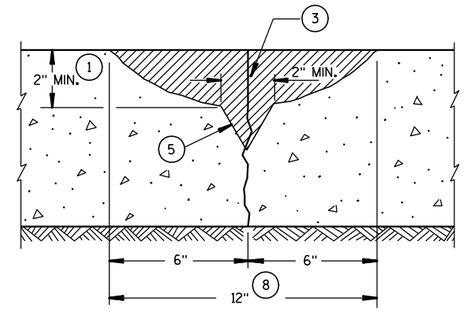

SECTION A-A

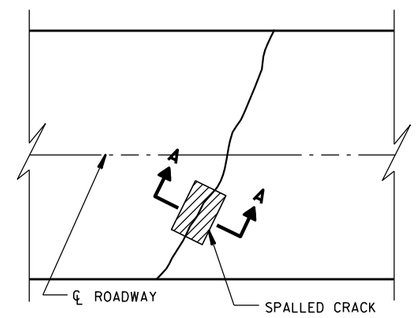

PLAN VIEW

CRACK REPAIR

GENERAL NOTES

1. REMOVE ALL CONCRETE, TO LIMITS SHOWN, TO A MAXIMUM OF ½ THE PAVEMENT DEPTH OR TOP OF DOWELS.
2. IF REPAIR IS DEEPER THAN ANTICIPATED SAWCUT, COMPRESSION RELIEF MATERIAL MUST BE USED. THE THICKNESS OF COMPRESSION RELIEF MATERIAL MUST BE EQUAL TO OR GREATER THAN THE WIDTH OF THE JOINT OR CRACK (1/4"). THIS MATERIAL SHOULD EXTEND FULL DEPTH OF THE REPAIR.
3. COMPRESSION RELIEF MATERIAL MUST BE USED. THE THICKNESS OF COMPRESSION RELIEF MATERIAL MUST BE EQUAL TO OR GREATER THAN THE WIDTH OF THE JOINT OR CRACK (1/4"). THIS MATERIAL SHOULD EXTEND FULL DEPTH OF THE REPAIR.
4. CLEAN, DRY SAND WHEN NECESSARY.
5. REMOVE UNSOUND MATERIAL BY CHIPPING AT 1:1 SLOPE.
6. 1/4" MINIMUM PREFORMED JOINT FILLER IF ADJACENT TO CONCRETE. EDGING REQUIRED. FULLY FORMED EDGE IF ADJACENT TO SHOULDER.
7. PAVEMENT TIES AS SHOWN. ALL EMBEDMENTS 6" MINIMUM AND INSTALLED WITH GROUT.
8. OVER 12" (NOMINAL WIDTH) WILL BE PAID AS SURFACE REPAIR.
9. PAID AS JOINT OR CRACK REPAIR.
10. FULL-DEPTH ADJUSTMENT SHALL BE CHIPPED TO BOTTOM OF PCC PAVEMENT AT 1:1 SLOPE.
11. BEYOND 18" WILL BE PAID AS SURFACE REPAIR.

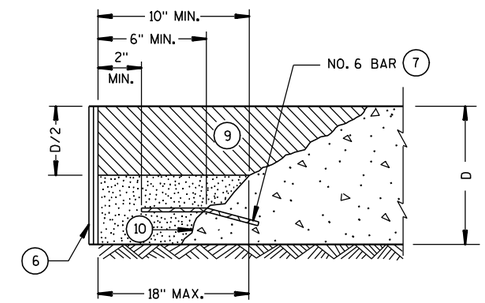

PROFILE VIEW

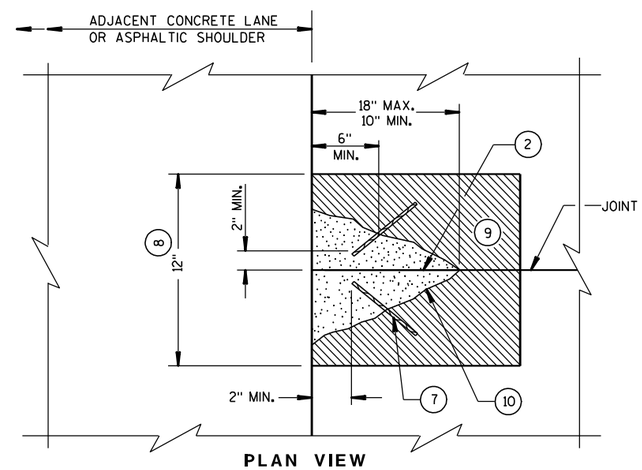

PLAN VIEW

FULL DEPTH REPAIR ADJUSTMENT

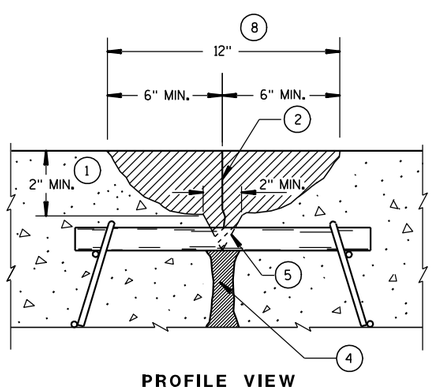

PROFILE VIEW

JOINT REPAIR

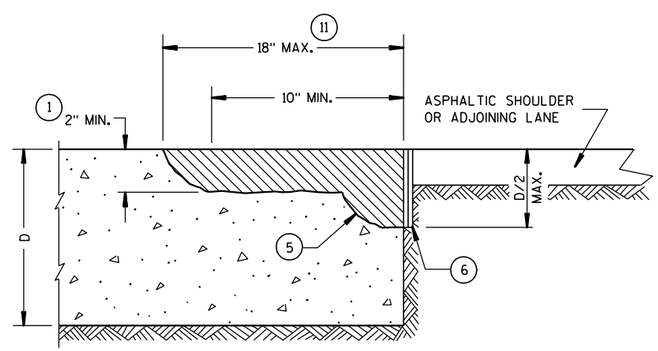

PROFILE VIEW

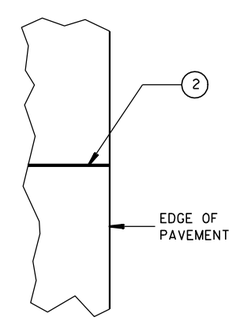

PLAN VIEW

EDGE REPAIR

CONCRETE PAVEMENT
PARTIAL DEPTH REPAIR

STATE OF WISCONSIN
DEPARTMENT OF TRANSPORTATION

APPROVED

3/21/03 — DATE

/S/ Bill Duckett — PAVEMENT ENGIN

FHWA

6

6

S.D.D. 13 C 8-2

S.D.D. 13 C 8-2

GENERAL NOTES

SAW CUT, DRILL, AND LIFT OUT EXISTING CONCRETE PAVEMENT WITHIN THE BOUNDARIES OF CONCRETE REPAIR AREAS. THE CONTRACTOR MAY MAKE ADDITIONAL SAW CUTS INSIDE THE REPAIR LIMITS TO REDUCE WEIGHT AND SIZE OF CONCRETE PIECES. ADDITIONAL SAW CUTS ARE NOT PAID FOR BY THE DEPARTMENT.

PROVIDE 6-FOOT MINIMUM DISTANCE FROM BOUNDARIES OF CONCRETE REPAIR AREAS TO ADJACENT TRANSVERSE JOINT OR CRACK IN THE SAME LANE.

THE LENGTH OF THE REPAIRS MAY VARY FROM THE DIMENSIONS SHOWN IF THE EXISTING CONCRETE PAVEMENT IS NONDOWELED AND THE PAVEMENT IS TO BE OVERLAID AFTER REPAIRING.

(1) DOWEL BARS MIGHT NOT EXIST.

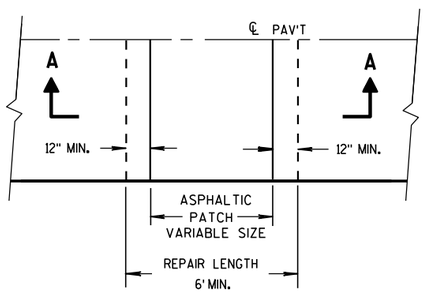

PLAN VIEW

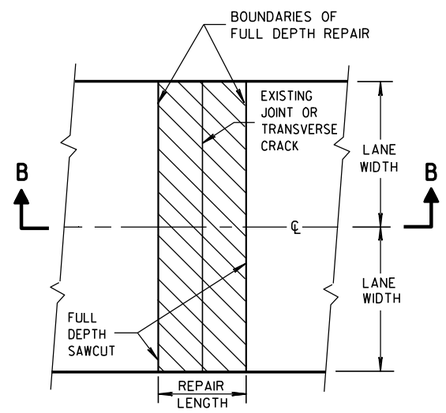

PLAN VIEW
(DOUBLE LANE REPAIR)

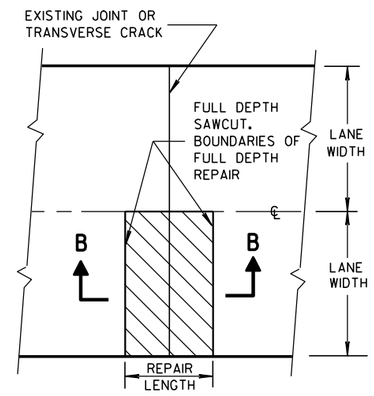

PLAN VIEW
(SINGLE LANE REPAIR)

FULL DEPTH CONCRETE PAVEMENT REMOVAL

(SEE NOTE)

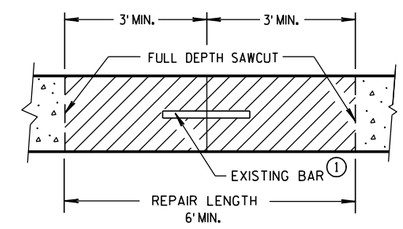

SECTION B-B

CONCRETE REMOVAL

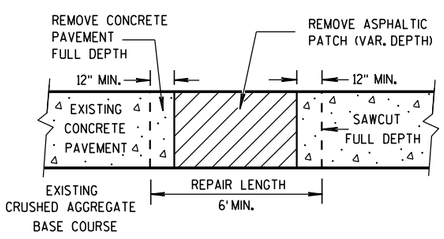

SECTION A-A

HMA PATCH REMOVAL

6

6

CONCRETE PAVEMENT REPAIR AND REPLACEMENT

STATE OF WISCONSIN
DEPARTMENT OF TRANSPORTATION

S.D.D. 13 C 9-9a

S.D.D. 13 C 9-9a

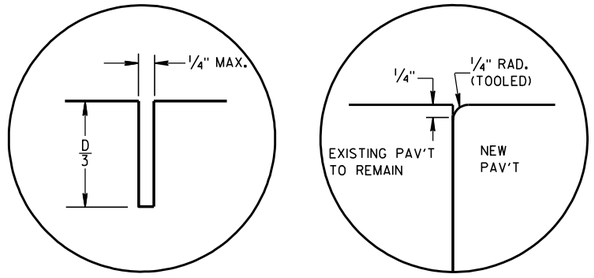

C1 C2

TRANSVERSE JOINTS

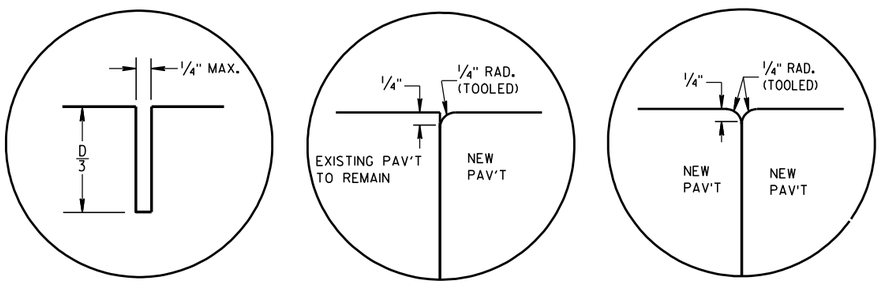

L1 L2 L3

LONGITUDINAL JOINTS

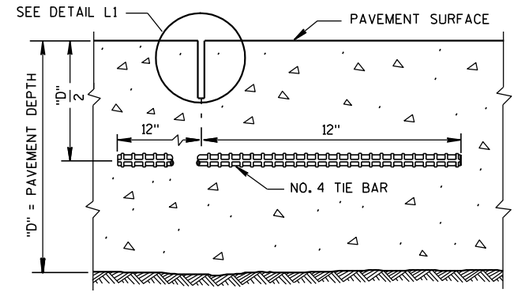

SECTION C-C

SAWED LONGITUDINAL JOINT

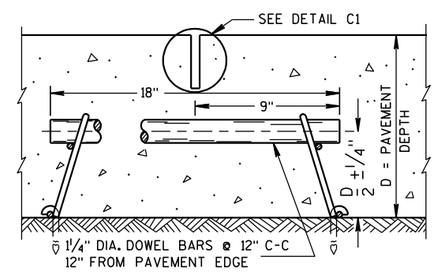

SECTION F-F

CONTRACTION JOINT

GENERAL NOTES

INSTALL DOWEL BARS PARALLEL TO THE PAVEMENT CENTERLINE AND PAVEMENT SURFACE.

CONCRETE PAVEMENT REPAIRS OF EXISTING NONDOWELED CONCRETE PAVEMENTS DO NOT NEED TO BE DOWELED.

DO NOT SEAL OR FILL JOINTS.

ANCHOR DOWEL BARS AND TIE BARS INTO DRILLED HOLES WITH AN EPOXY.

PROVIDE A MINIMUM DISTANCE OF 24 INCHES FROM AN EXISTING TRANSVERSE JOINT OR THE EDGE OF REPLACEMENT TO THE CENTER OF THE TIE BAR NEAREST THAT JOINT OR EDGE.

(1) APPLY A THIN UNIFORM COATING OF SURFACE TREATMENT TO THE FREE END OF DOWEL BARS TO PREVENT BONDING.

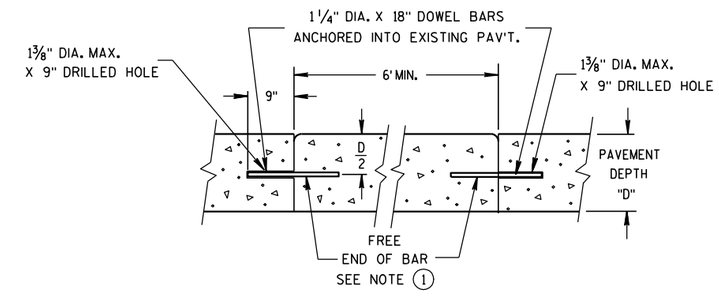

SECTION D-D

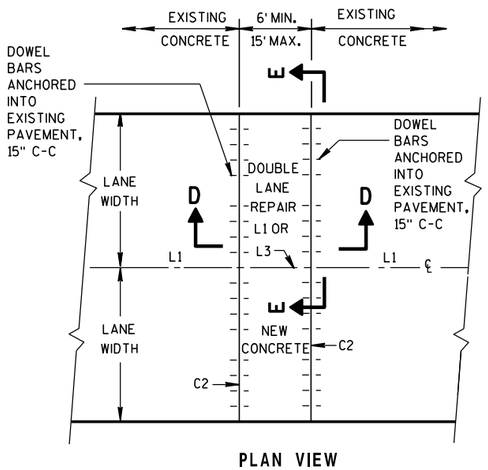

PLAN VIEW

MULTI-LANE CONCRETE PAVEMENT REPAIR

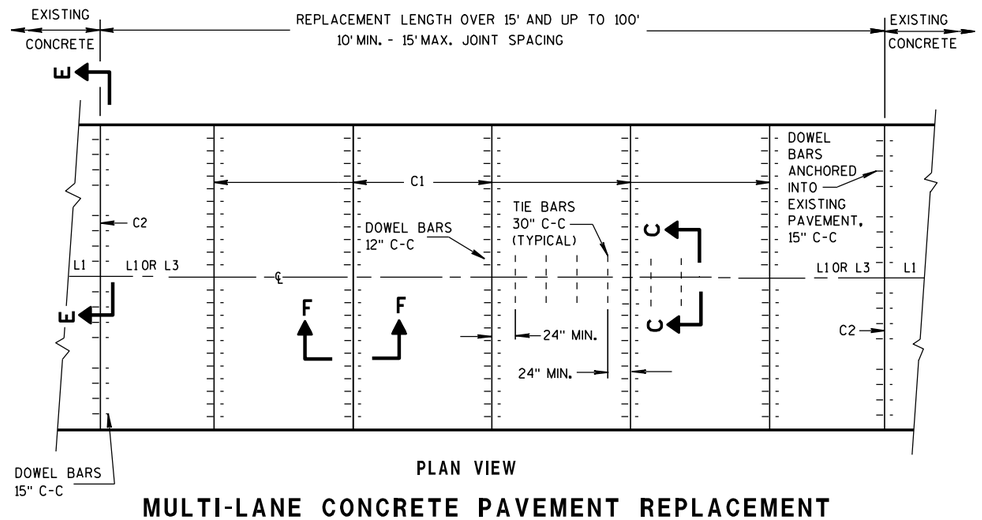

PLAN VIEW

MULTI-LANE CONCRETE PAVEMENT REPLACEMENT

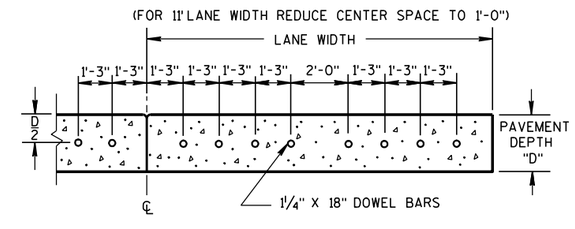

SECTION E-E

SPACING OF DOWEL BARS ANCHORED INTO EXISTING PAVEMENT

CONCRETE PAVEMENT REPAIR AND REPLACEMENT

STATE OF WISCONSIN
DEPARTMENT OF TRANSPORTATION

6

6

S.D.D. 13 C 9-9b

S.D.D. 13 C 9-9b

GENERAL NOTES

1. WITH THE APPROVAL OF THE ENGINEER, FOR SINGLE LANE PAVEMENT REPLACEMENTS LESS THAN 30 FEET IN LENGTH, THE CONTRACTOR MAY INSTALL DRILLED TIE BARS ON 6:1 SKEW HORIZONTALLY, DIRECTION OF SKEW ALTERNATING WITH EACH SUCCESSIVE BAR. DRIVE SKEWED TIE BARS TO A DEPTH OF 6 INCHES AND TO SUCH A DIAMETER AS TO PROVIDE A TIGHT DRIVEN FIT.

2. USE AN ENGINEER-APPROVED BOND BREAKER (E.G. RELEASE AGENT, CURING COMPOUND) FOR SINGLE LANE REPAIRS UP TO 15 FEET IN LENGTH.

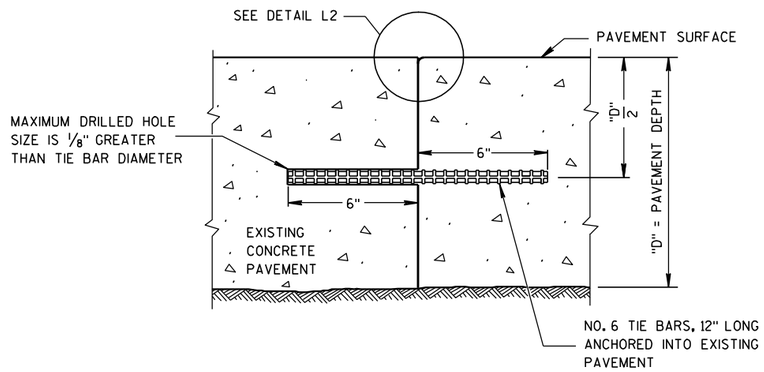

SECTION G-G

TIE BARS ANCHORED INTO EXISTING PAVEMENT

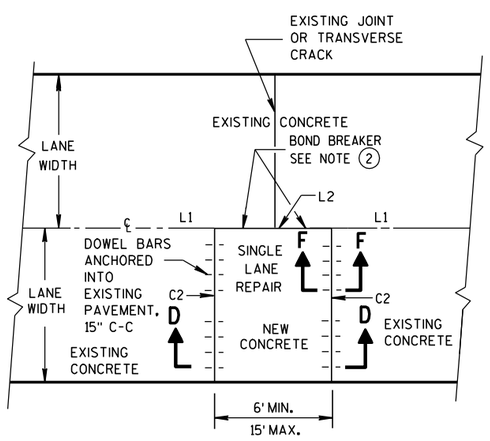

PLAN VIEW

SINGLE LANE CONCRETE PAVEMENT REPAIR

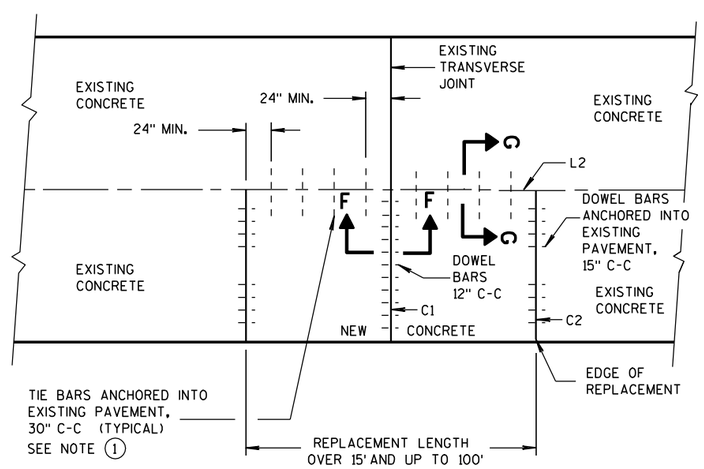

PLAN VIEW

SINGLE LANE CONCRETE PAVEMENT REPLACEMENT

CONCRETE PAVEMENT REPAIR AND REPLACEMENT

STATE OF WISCONSIN
DEPARTMENT OF TRANSPORTATION

APPROVED

11-1-2011 — DATE

/S/ Deb Bischoff — PAVEMENT POLICY & DE[illegible]NEER

FHWA

6

S.D.D. 13 C 9-9c

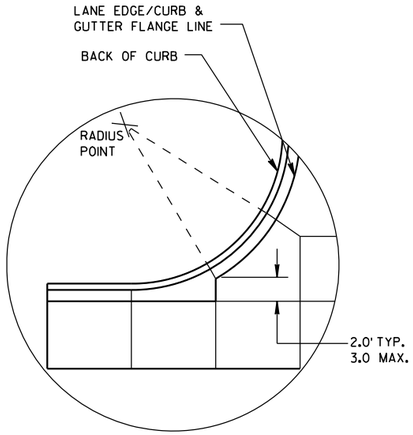

DETAIL "A"

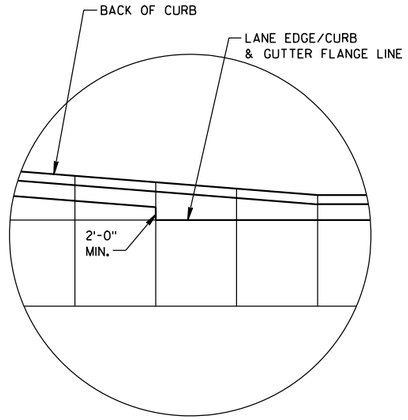

DETAIL "B"

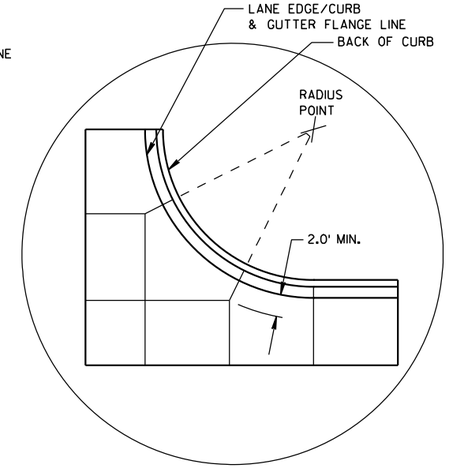

DETAIL "C"

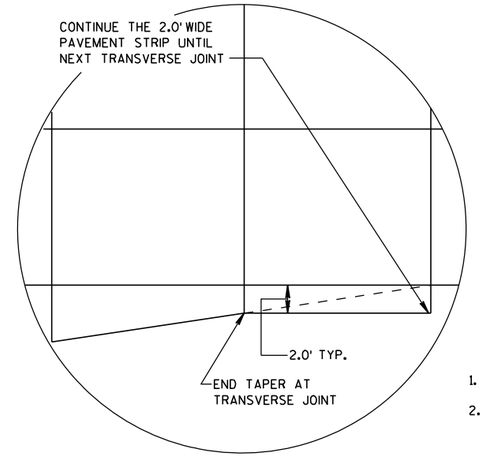

DETAIL "D"

GENERAL NOTES

THE PRIMARY ROADWAY CONTROLS THE TRANSVERSE JOINT PATTERN.

ALIGN NEW JOINTS WITH EXISTING JOINTS OR CRACKS.

CONSTRUCT TRANSVERSE JOINTS PERPENDICULAR TO THE ROADWAY.

ADJUST TRANSVERSE JOINTS TO ALIGN WITH UTILITY FIXTURES (E.G. MANHOLES AND INLETS) IN THE PAVEMENT STRUCTURE WHEN POSSIBLE. WATER VALVES DO NOT REQUIRE JOINT ADJUSTMENT.

AVOID SLABS LESS THAN 2 FEET WIDE OR GREATER THAN 15 FEET WIDE.

SEE TABLE FOR TRANSVERSE JOINT SPACING. JOINT SPACING SPECIFIED IS MAXIMUM AND ACTUAL SPACING CAN BE ADJUSTED TO ACCOMMODATE INTERSECTIONS.

AVOID ANGLES LESS THAN 60° BY DOGLEGGING JOINTS THROUGH CURVE RADIUS POINTS. USE 90° ANGLES WHEN POSSIBLE.

CORRELATE LONGITUDINAL JOINTS WITH LANE LINES WHEN POSSIBLE.

1. PROVIDE TRANSVERSE JOINTS AT ALL PAVEMENT WIDTH CHANGES.
2. CONSTRUCT DOWELED EXPANSION JOINT ON THE SIDE ROAD OF AN INTERSECTION IF THE SIDE ROAD IS CONCRETE PAVEMENT AND GREATER THAN 300 FEET IN LENGTH. ALIGN EXPANSION JOINT WITH EDGE OF RADIUS.
3. THE ENGINEER MAY APPROVE SLIGHT VARIATIONS FROM THESE JOINTING DETAILS.

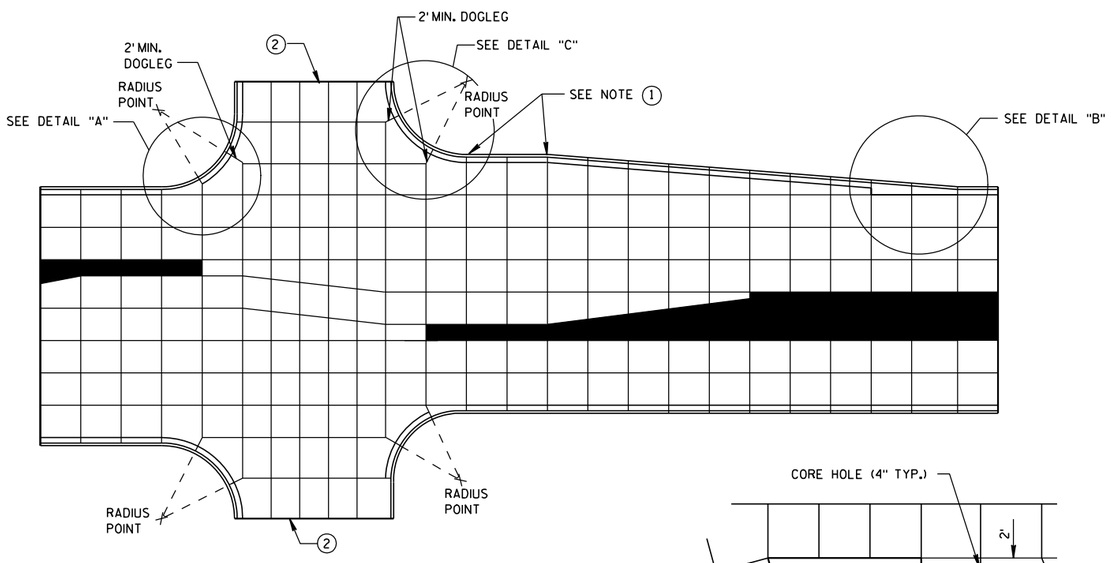

STANDARD INTERSECTION

PAVEMENT DEPTH AND JOINT SPACING TABLE

PAVEMENT DEPTH (D)	CONTRACTION JOINT SPACING
6", 6½"	12'
7", 7½"	14'
8" & ABOVE	15'

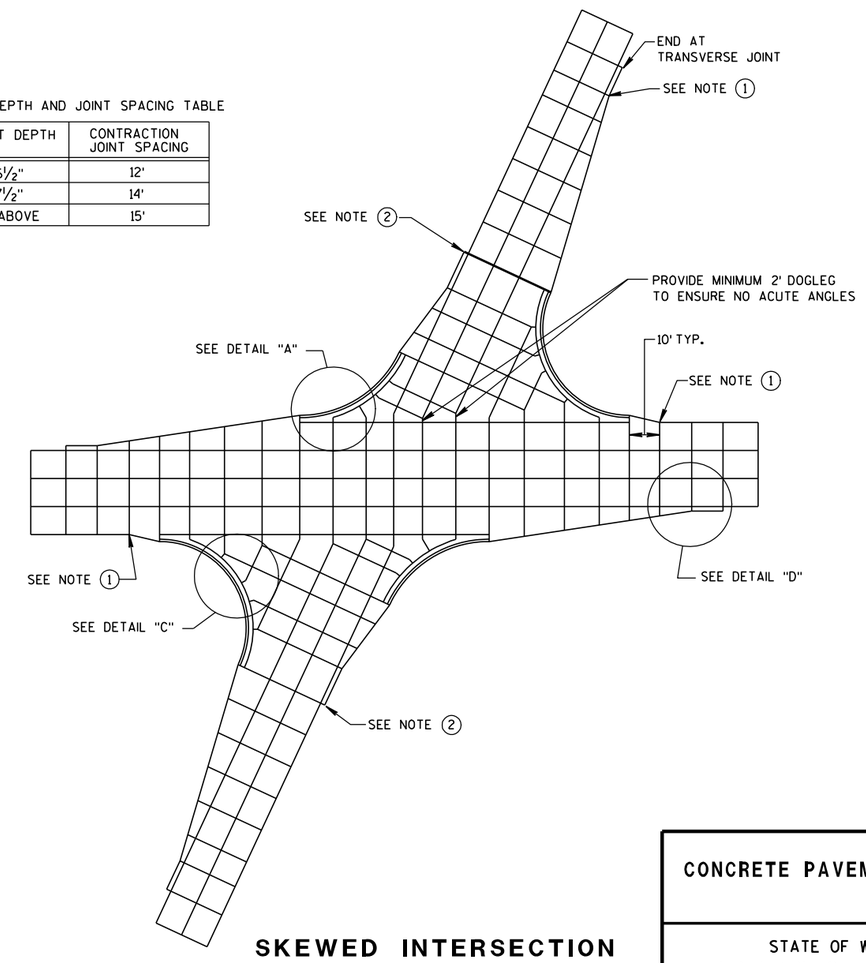

SKEWED INTERSECTION

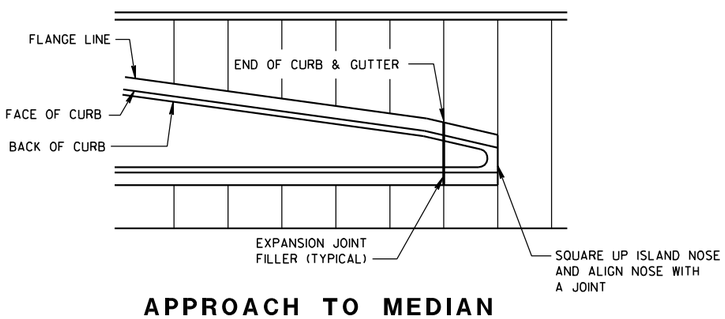

APPROACH TO MEDIAN

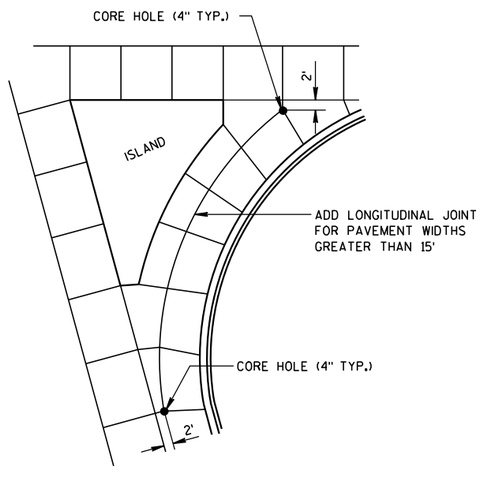

LARGE RIGHT TURN

CONCRETE PAVEMENT JOINTING

STATE OF WISCONSIN
DEPARTMENT OF TRANSPORTATION

6

S.D.D. 13 C 18-1a

LEGEND

POTENTIAL DOWELED EXPANSION JOINT

DOWELED JOINT

TIED JOINT

GENERAL NOTES

USE AN EXPANSION JOINT FILLER MEETING THE REQUIREMENTS OF STANDARD SPECIFICATION 415.

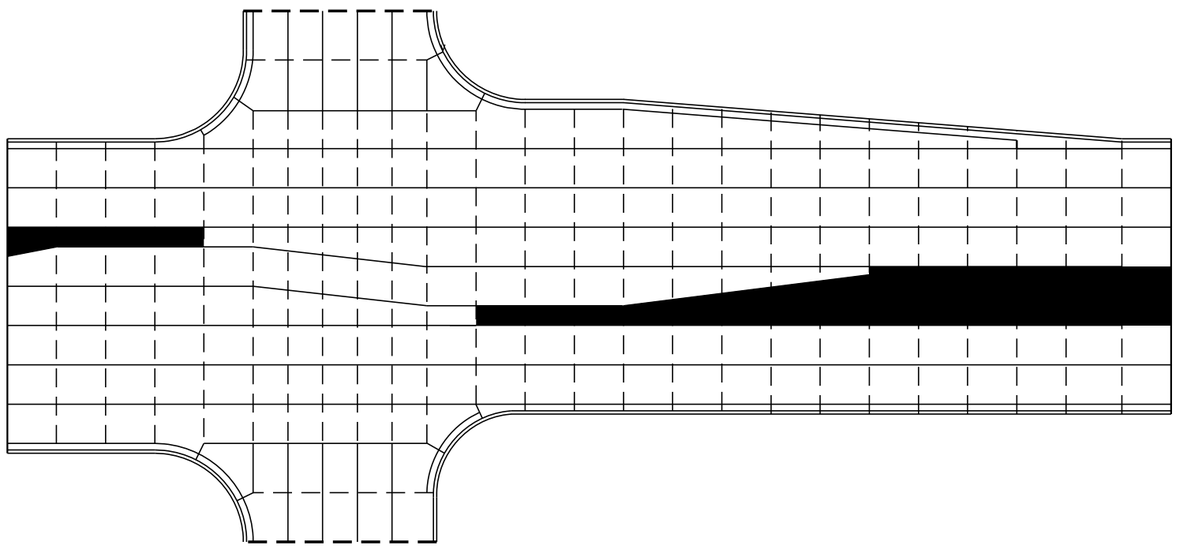

STANDARD INTERSECTION

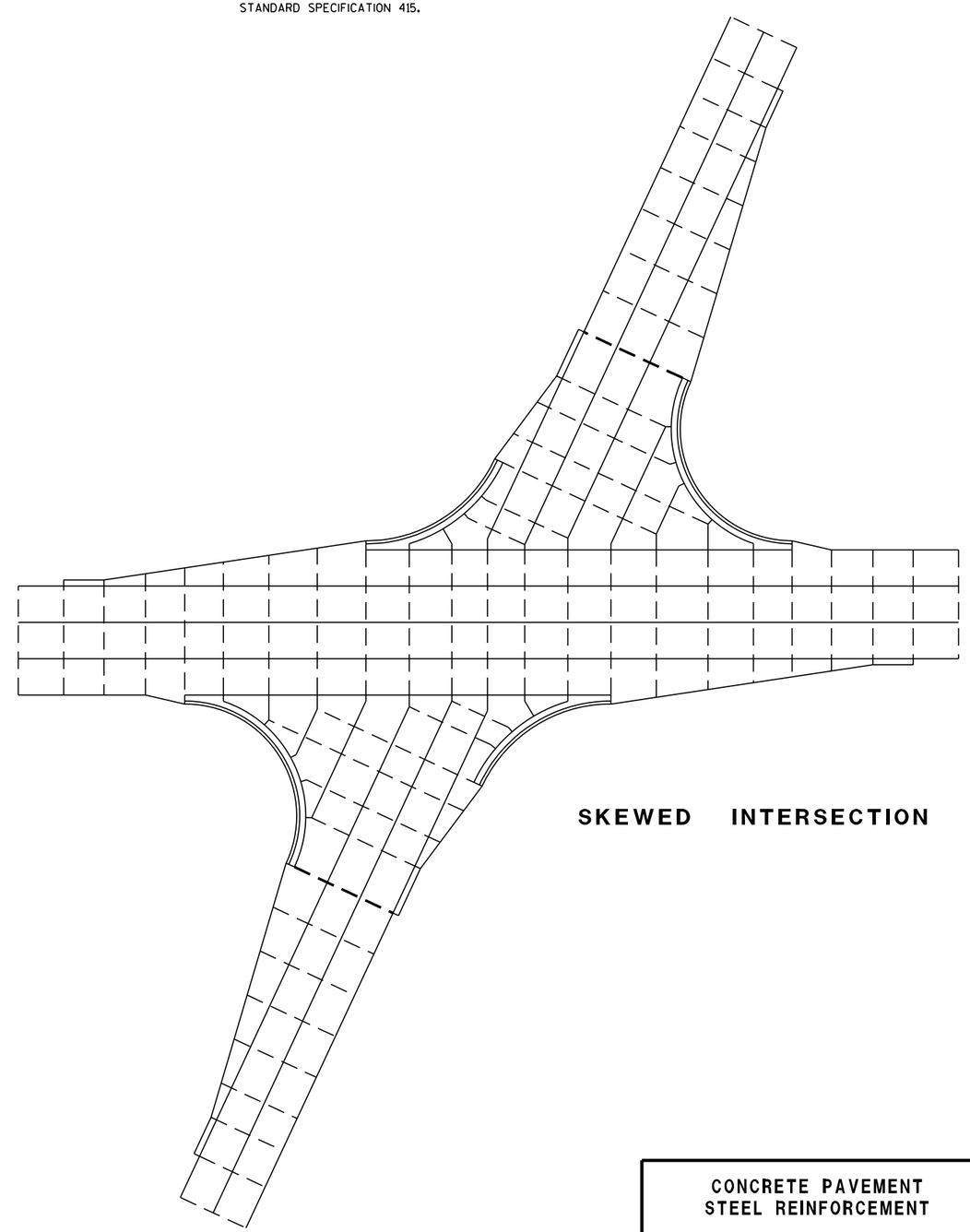

SKEWED INTERSECTION

CONCRETE PAVEMENT
STEEL REINFORCEMENT

STATE OF WISCONSIN
DEPARTMENT OF TRANSPORTATION

6

S.D.D. 13 C 18-1b

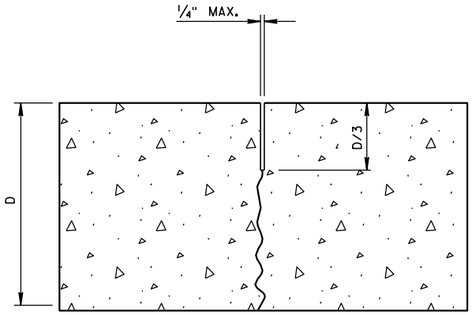

UNDOWELED-TRANSVERSE

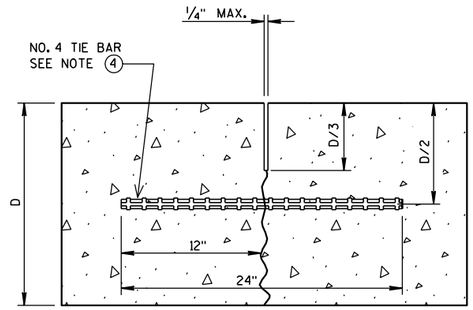

TIED LONGITUDINAL

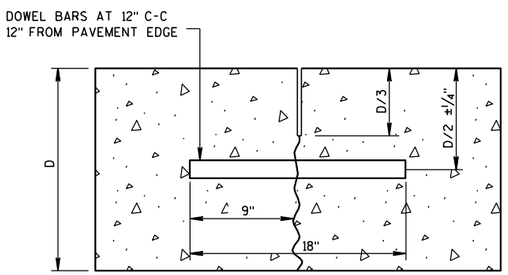

DOWELED-TRANSVERSE

CONTRACTION JOINTS

SEE NOTE 2

GENERAL NOTES

1. USE DOWELED EXPANSION JOINTS ON SIDE ROADS AT INTERSECTIONS (TO ISOLATE THE SIDE ROAD FROM THE THROUGH STREET) IF THE SIDE ROAD IS CONCRETE PAVEMENT AND GREATER THAN 300 FEET IN LENGTH.
2. SPACE CONTRACTION JOINTS IN ACCORDANCE WITH 13C4, 13C11 OR 13C13.
3. LOCATE CONSTRUCTION JOINTS A MINIMUM OF 4 FEET FROM THE NEAREST CONTRACTION JOINT AND ALIGN PARALLEL TO THE CONTRACTION JOINTS.
4. SPACE TIE BARS AT LONGITUDINAL CONSTRUCTION OR CONTRACTION JOINTS IN ACCORDANCE WITH SDD 13C1.
5. CONSTRUCTION JOINTS CAN BE FORMED OR SAWED.
6. IF JOINT IS FORMED, PROVIDE A 1/4-INCH RADIUS.

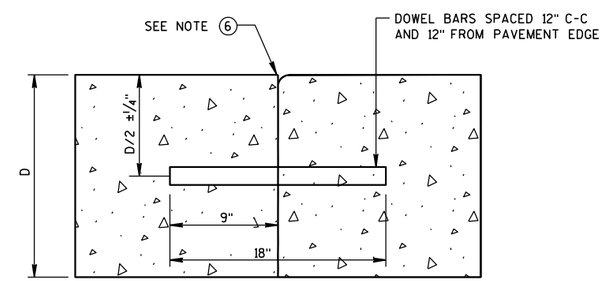

DOWELED TRANSVERSE

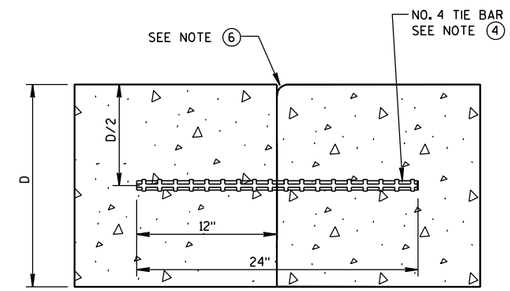

TIED LONGITUDINAL

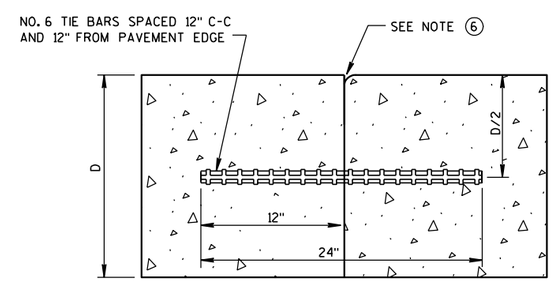

TIED TRANSVERSE

SEE NOTE 3

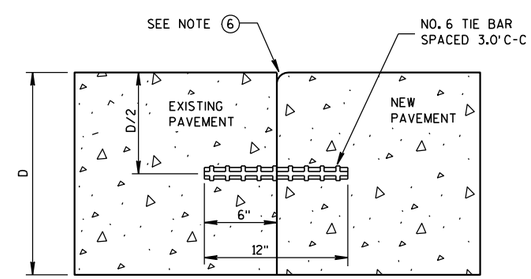

TIED LONGITUDINAL TO EXISTING

CONSTRUCTION JOINTS

SEE NOTE 5

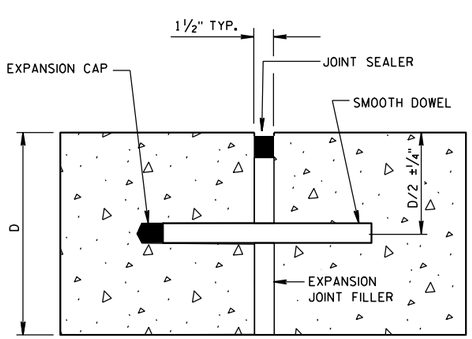

DOWELED-TRANSVERSE

SEE NOTE 1

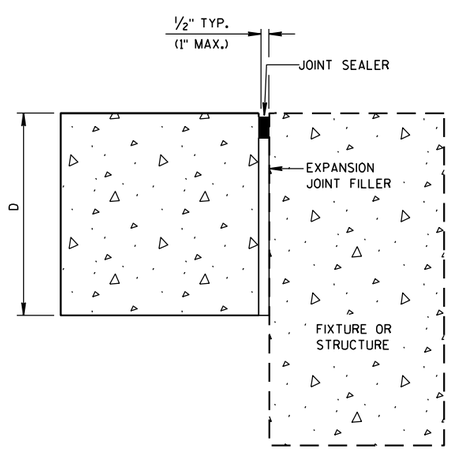

UNTIED-LONGITUDINAL

EXPANSION JOINTS

6

6

S.D.D. 13 C 18-1c

S.D.D. 13 C 18-1c

CONCRETE PAVEMENT
JOINT TYPES

STATE OF WISCONSIN
DEPARTMENT OF TRANSPORTATION

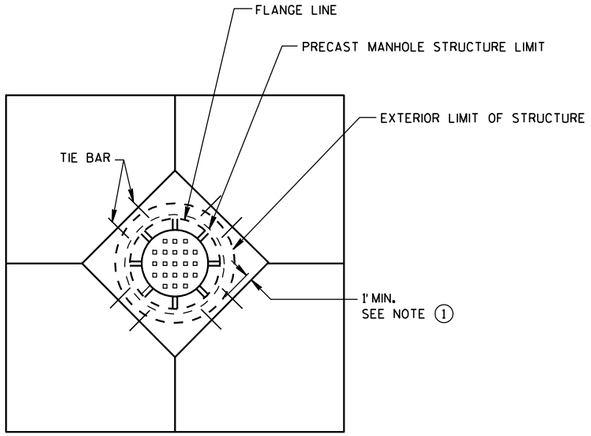

DIAGONAL MANHOLE BOXOUT FOR CONSTRUCTION JOINTS

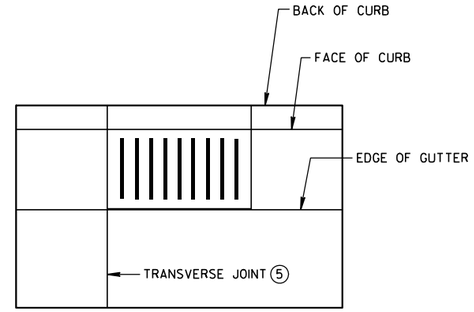

INLET WITH TRANSVERSE JOINT

GENERAL NOTES

1. USE BOXOUTS WHEN UTILITY STRUCTURE IS IN THE PATH OF CONSTRUCTION JOINTS. PROVIDE A 1 FOOT MINIMUM CLEARANCE BETWEEN THE EXTERIOR LIMIT OF THE STRUCTURE TO THE DIAMOND BOXOUT.
2. ADJUST TRANSVERSE JOINT TO INTERSECT MANHOLE IF POSSIBLE.
3. IF DISTANCE BETWEEN THE LONGITUDINAL JOINT AND THE EDGE OF MANHOLE IS GREATER THAN 2 FEET, DO NOT DIVERT JOINT AND SAW LONGITUDINAL JOINT AS NORMAL. IF DISTANCE IS 2 FEET OR LESS, DIVERT LONGITUDINAL JOINT AT A 2:1 TAPER RATE TO THE CENTER OF THE MANHOLE.
4. IF DISTANCE FROM THE EDGE OF MANHOLE TO THE NEAREST TRANSVERSE JOINT IS GREATER THAN 4 FEET, REDIRECT JOINT TO INTERSECT MANHOLE. IF DISTANCE IS 4 FEET OR LESS, PLACE REBAR REINFORCEMENT AROUND MANHOLE.
5. ALIGN TRANSVERSE JOINT WITH ONE EDGE OF INLET WHEN PRACTICAL.

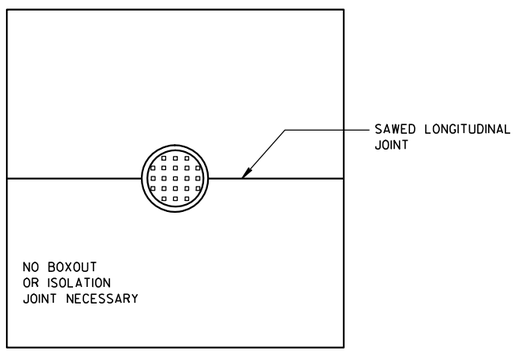

MANHOLE WITH LONGITUDINAL JOINT

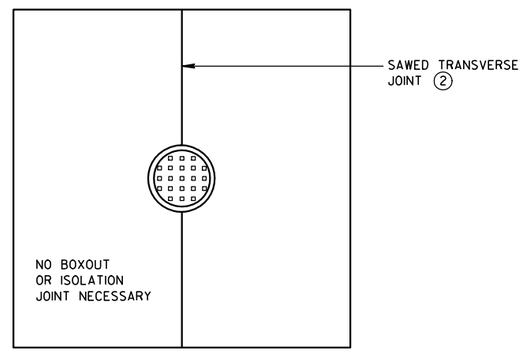

MANHOLE WITH TRANSVERSE JOINT

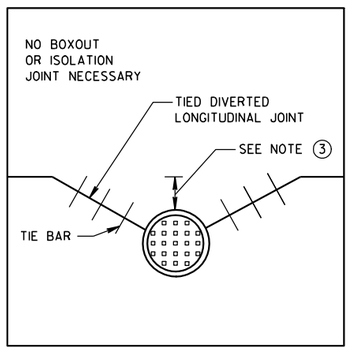

MANHOLE WITH DIVERTED LONGITUDINAL CONTRACTION JOINT

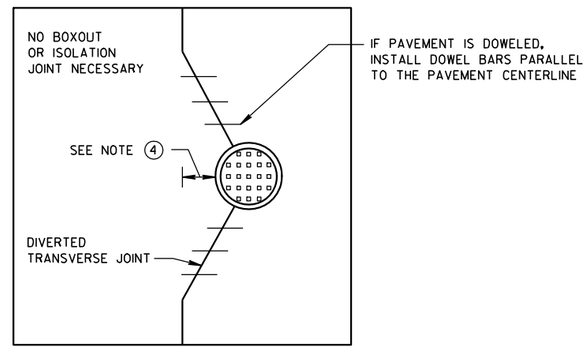

MANHOLE WITH DIVERTED TRANSVERSE CONTRACTION JOINT

CONCRETE PAVEMENT JOINTING AT UTILITY FIXTURES

STATE OF WISCONSIN
DEPARTMENT OF TRANSPORTATION

APPROVED
10-5-2010 /S/ Deb Bischoff
DATE PAVEMENT POLICY & D 89 INEER
FHWA

6
S.D.D. 13 C 18-1d

GENERAL NOTES

DETAILS OF INSTALLATION, MATERIALS AND WORKMANSHIP NOT SHOWN ON THIS DRAWING SHALL CONFORM TO THE PERTINENT REQUIREMENTS OF THE STANDARD SPECIFICATIONS AND APPLICABLE SPECIAL PROVISIONS.

ALL LETTERS, ARROWS AND SYMBOLS SHALL BE IN CONFORMANCE WITH REQUIREMENTS INCLUDED IN "STANDARD ALPHABETS FOR HIGHWAY SIGNS AND PAVEMENT MARKING" BOOK BY THE FEDERAL HIGHWAY ADMINISTRATION. ALL LETTERS, ARROWS AND SYMBOLS SHALL BE WHITE AND REFLECTORIZED. SMALL DIFFERENCES IN DIMENSIONS WITHIN THE TOLERANCES OF THAT BOOK ARE ACCEPTABLE.

A DETAILED DRAWING OF THE HANDICAPPED PARKING SYMBOL IS ILLUSTRATED IN THE "STANDARD HIGHWAY SIGNS MANUAL" BY THE FEDERAL HIGHWAY ADMINISTRATION.

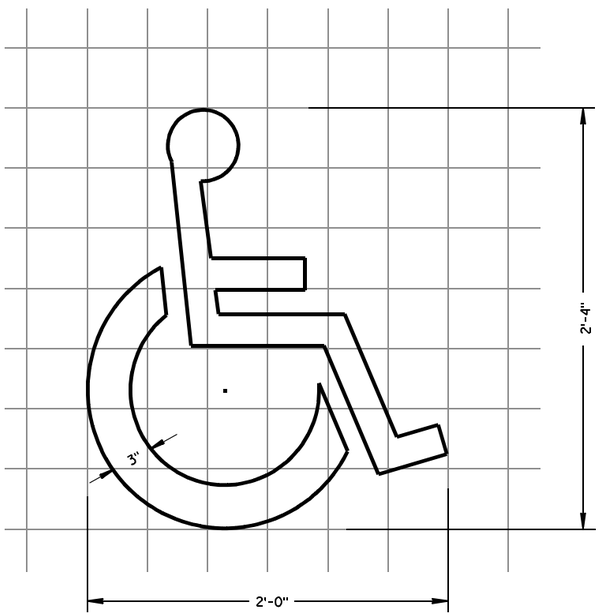

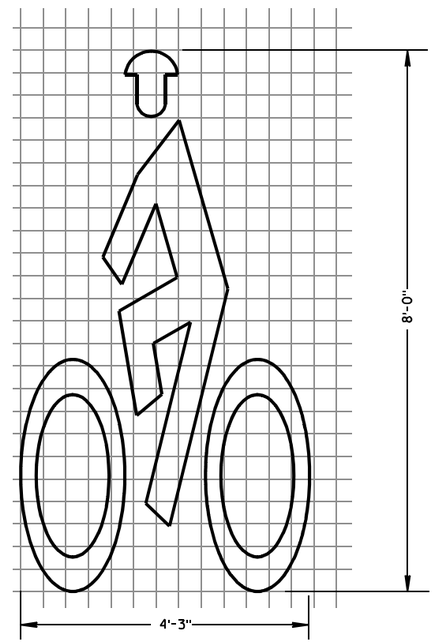

BIKE CROSSING SYMBOL

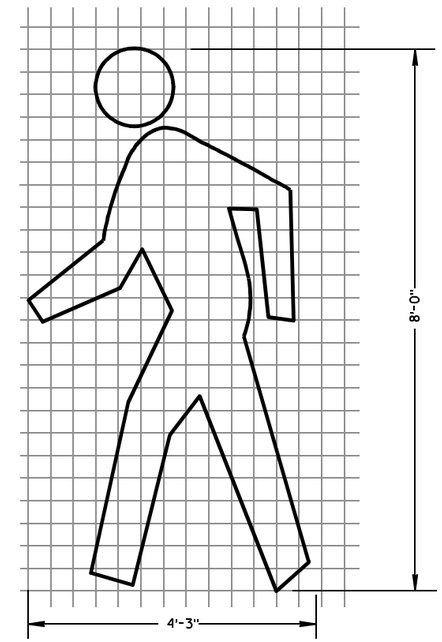

PEDESTRIAN SYMBOL

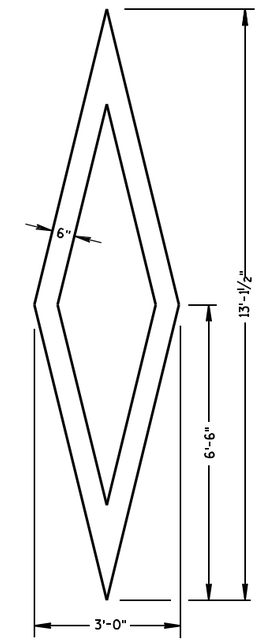

PREFERENTIAL LANE SYMBOL

6

6

PAVEMENT MARKING SYMBOLS

STATE OF WISCONSIN
DEPARTMENT OF TRANSPORTATION

APPROVED

7/1/11 — DATE

/S/ Thomas N Nathan — STATE TRAFFIC ENGINEER

FHWA

S.D.D. 15 C 7-12a

S.D.D. 15 C 7-12a

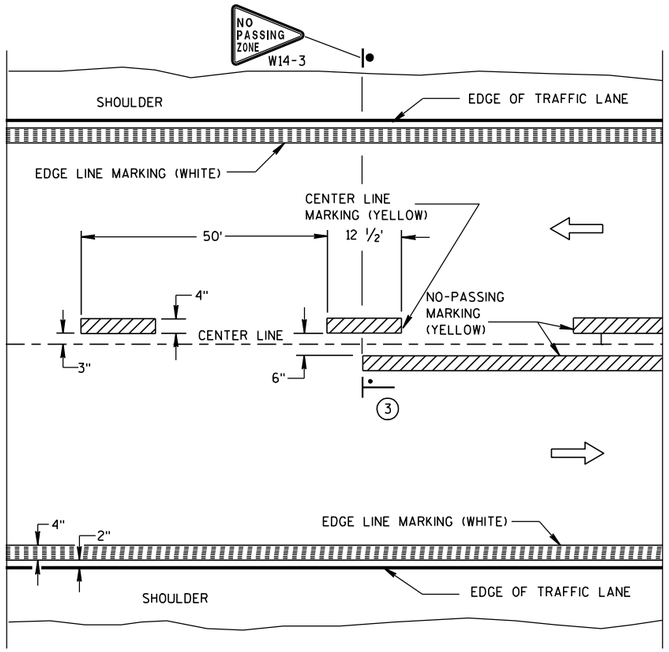

TWO WAY TRAFFIC

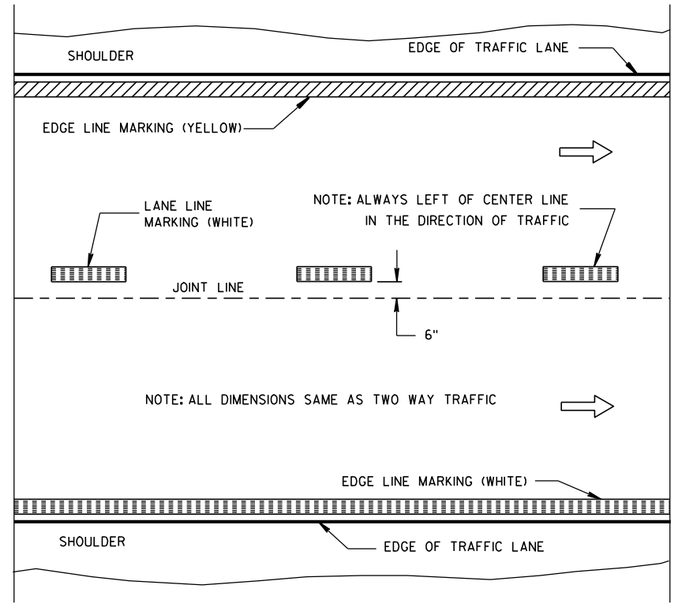

ONE WAY TRAFFIC

PERMANENT PAVEMENT MARKING

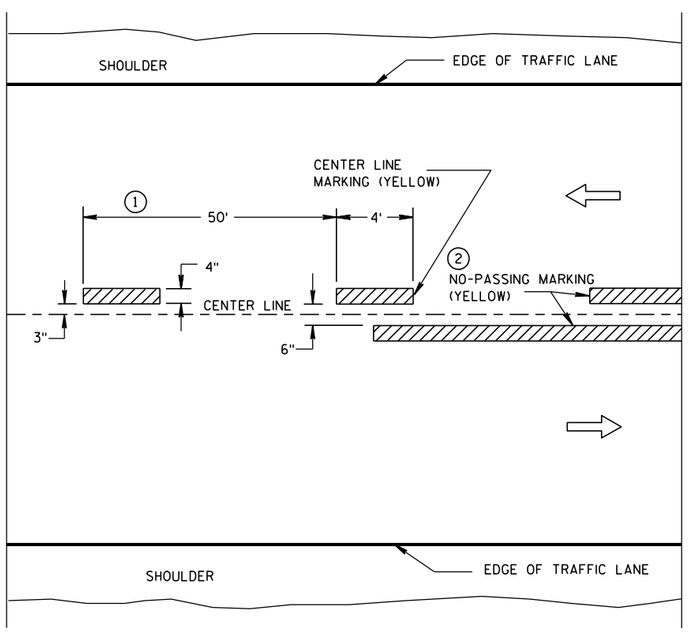

TWO WAY TRAFFIC

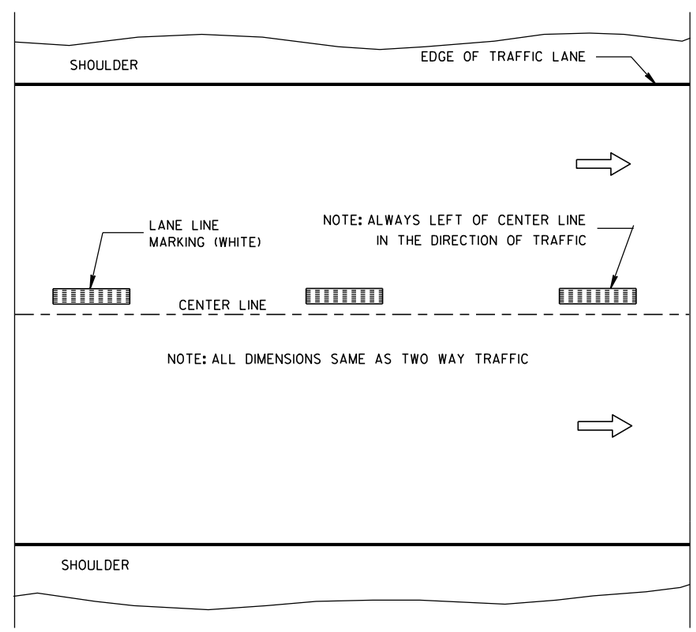

ONE WAY TRAFFIC

TEMPORARY (INTERMEDIATE) PAVEMENT MARKING

(SHOWS CYCLE FOR TEMPORARY CENTER LINE OR TEMPORARY LANE LINE MARKING)

GENERAL NOTES

DETAILS OF CONSTRUCTION NOT SHOWN ON THIS DRAWING SHALL CONFORM TO STANDARD SPECIFICATIONS AND SPECIAL PROVISIONS.

1. HALF CYCLE LENGTHS (25'±) WITH 2' MINIMUM STRIPE LENGTHS SHALL BE PROVIDED ON ROADWAYS (INCLUDING TEMPORARY TRAVELED WAYS) WITH REVERSE CURVATURE, CURVATURE OF OVER 5 DEGREES OR WHEN DIRECTED BY THE ENGINEER TO MARK UNUSUAL ALIGNMENT OF THE TRAVELED WAY.
2. NO PASSING ZONE TEMPORARY PAVEMENT MARKING IS REQUIRED TO BE PLACED, WHERE APPROPRIATE, ALONG WITH CENTERLINE TEMPORARY PAVEMENT MARKING WHEN A SAME DAY PERMANENT PAVEMENT MARKING ITEM IS INCLUDED IN THE CONTRACT.
3. NO PASSING ZONE MARKINGS ARE PLACED ACCORDING TO "T" MARKINGS. IF EXISTING NO PASSING ZONE W14-3 SIGNS ARE BEYOND 50 FEET IN EITHER DIRECTION, THE SIGNS SHALL BE MOVED TO THE "T" MARKINGS.

NOTE

ARROW SYMBOL (⇨) SHOWS DIRECTION OF TRAVEL

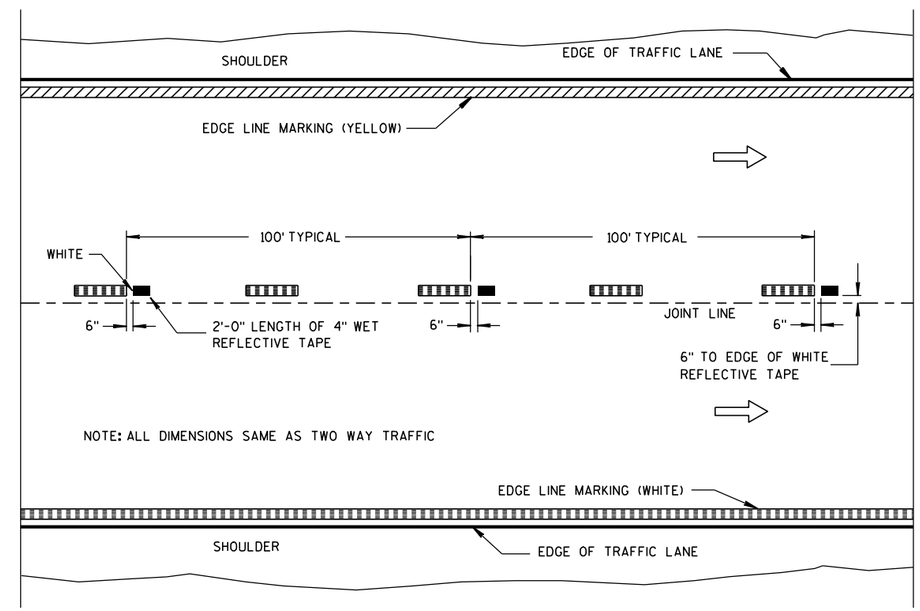

WET REFLECTIVE TAPE SUPPLEMENT TO SPRAYED OR NON WET REFLECTIVE TAPE LANE LINE

LEGEND

"T" MARKING

POST MOUNTED SIGN

PAVEMENT MARKING (MAINLINE)

STATE OF WISCONSIN
DEPARTMENT OF TRANSPORTATION

APPROVED
6-23-11 /S/ Thomas N. Notbohm
DATE STATE TRAFFIC ENGINEER
FHWA

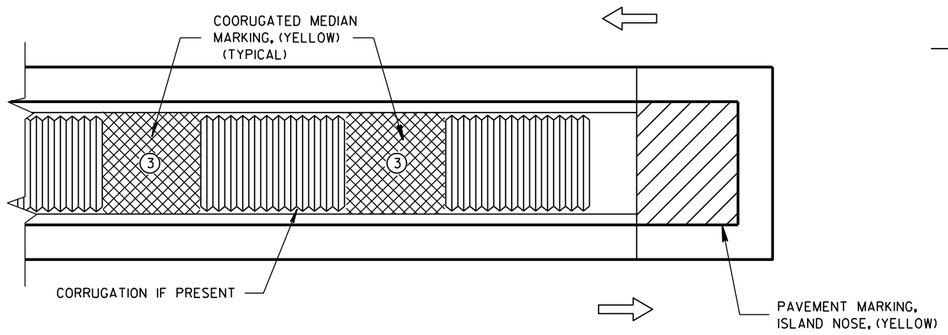

MEDIAN ISLAND WITH SQUARE BLUNT NOSE

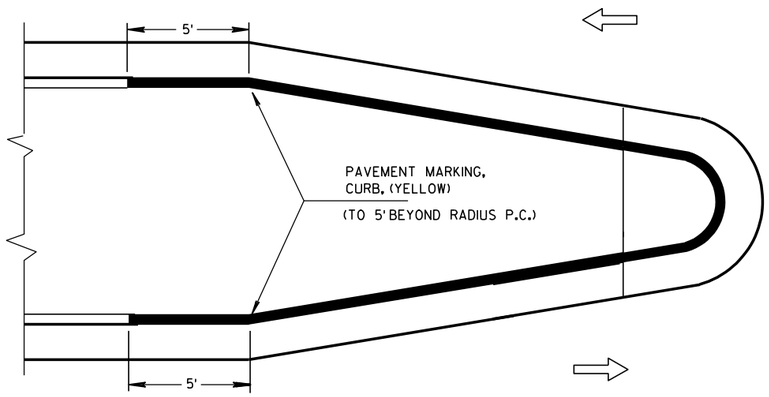

MEDIAN ISLAND WITH ROUND BLUNT NOSE

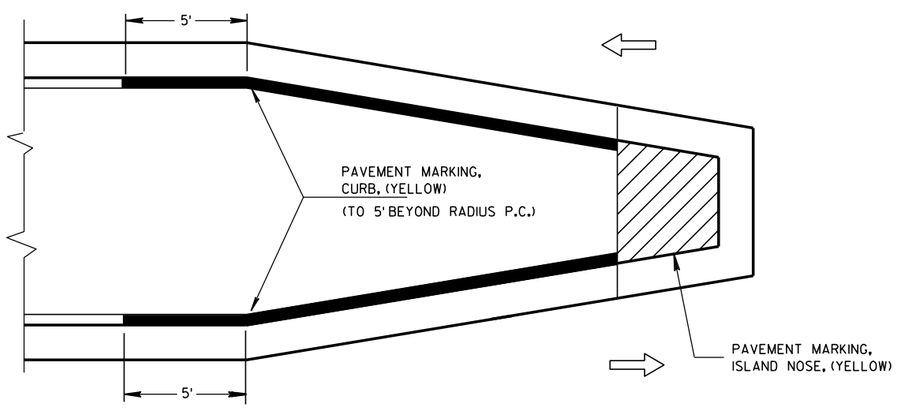

MEDIAN ISLAND WITH SLOPED NOSE

TYPICAL PLACEMENT OF PAVEMENT MARKING ON MEDIAN ISLANDS

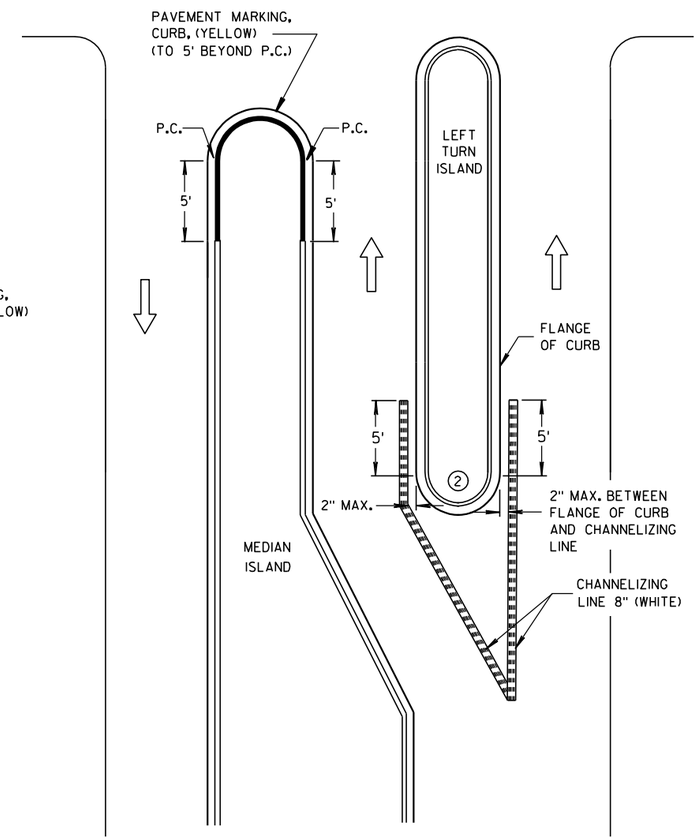

LEFT TURN & MEDIAN ISLAND

GENERAL NOTES

1. STOP LINE IS REQUIRED ONLY WHEN SPECIFIED IN THE CONTRACT.
2. DO NOT MARK CURB NOSES THAT SEPARATE LANES OF TRAFFIC TRAVELING IN THE SAME DIRECTION.
3. WHEN CONCRETE CORRUGATED MEDIAN IS CONSTRUCTED TO SEPARATE TRAFFIC OPERATING IN THE OPPOSING DIRECTION YELLOW PAVEMENT MARKING SHALL BE APPLIED TO THE FLAT PORTION OF THE CONCRETE CORRUGATED MEDIAN. THE ITEM OF PAVEMENT MARKING, CONCRETE CORRUGATED MEDIAN, WILL BE MEASURED IN PLACE AND AND ACCEPTED IN ACCORDANCE WITH THE CONTRACT AND PAID FOR AT THE CONTRACT UNIT PRICE PER SQUARE FOOT.

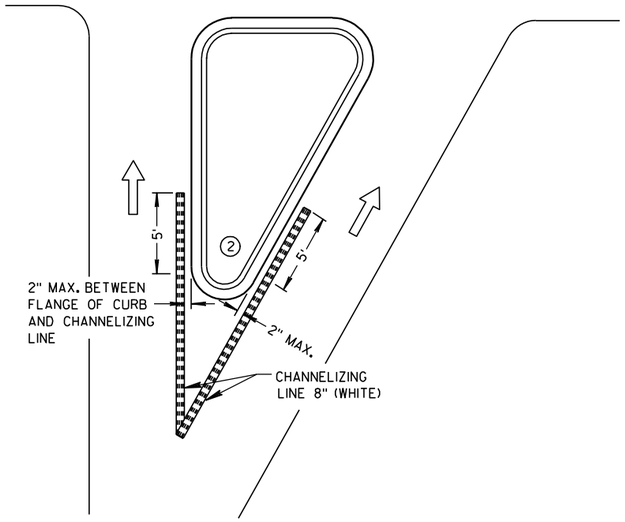

RIGHT TURN ISLAND

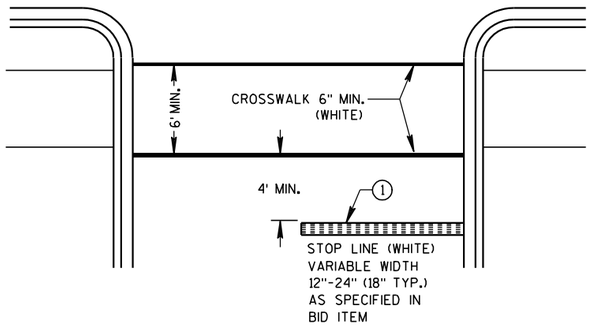

STOP LINE AND CROSSWALK

LEGEND

- ISLAND NOSE MARKING
- CURB MAKING
- CORRUGATED MEDIAN MARKING
- DIRECTION OF TRAVEL

PAVEMENT MARKING (ISLANDS, STOP LINE & CROSS WALK)

STATE OF WISCONSIN
DEPARTMENT OF TRANSPORTATION

6

6

S.D.D. 15 C 8-14f

S.D.D. 15 C 8-14f

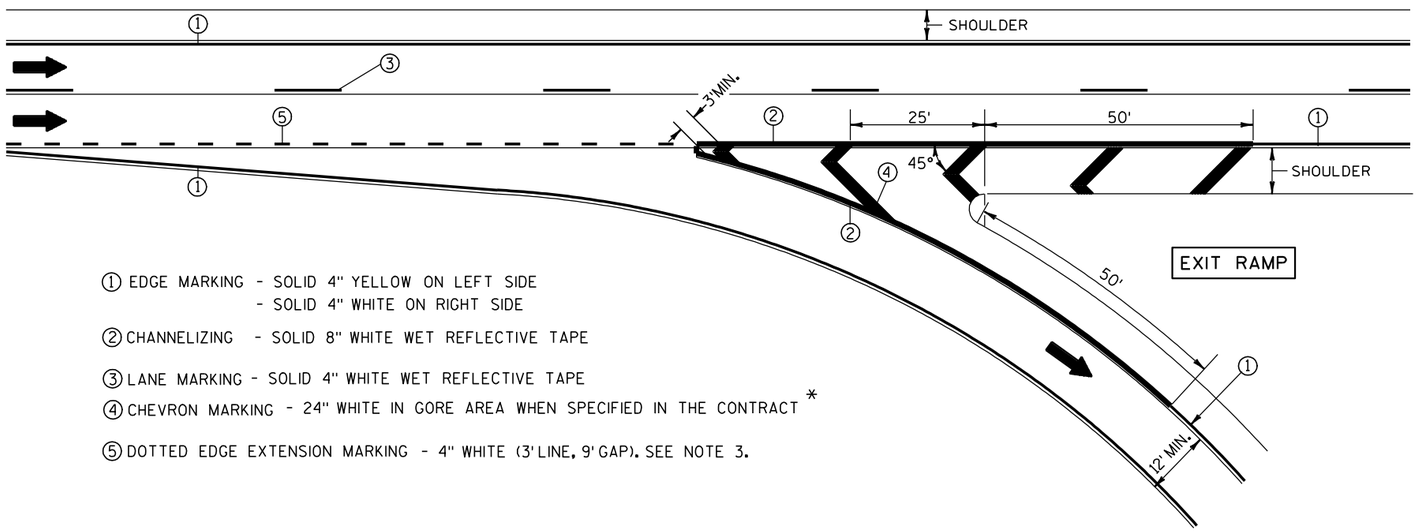

① EDGE MARKING - SOLID 4" YELLOW ON LEFT SIDE
- SOLID 4" WHITE ON RIGHT SIDE

② CHANNELIZING - SOLID 8" WHITE WET REFLECTIVE TAPE

③ LANE MARKING - SOLID 4" WHITE WET REFLECTIVE TAPE

④ CHEVRON MARKING - 24" WHITE IN GORE AREA WHEN SPECIFIED IN THE CONTRACT *

⑤ DOTTED EDGE EXTENSION MARKING - 4" WHITE (3' LINE, 9' GAP). SEE NOTE 3.

NOTES:

1. ARROWS SHOWN ON THIS MARKING PLAN DESIGNATE TRAFFIC FLOW, AND SHALL NOT BE TAKEN AS PROPOSED PAVEMENT MARKINGS.

2. PLACE WHITE EDGE OF TAPE 6" LEFT FROM JOINT.

3. 3' LINE 9' GAP, EXCEPT RETRACE THE EXISTING LINE-GAP PATTERN WHERE EXISTING MARKINGS ARE IN PLACE.

4. RETRACE EXISTING DIAGONAL MARKINGS.

* REFER TO DESIGN NOTES.

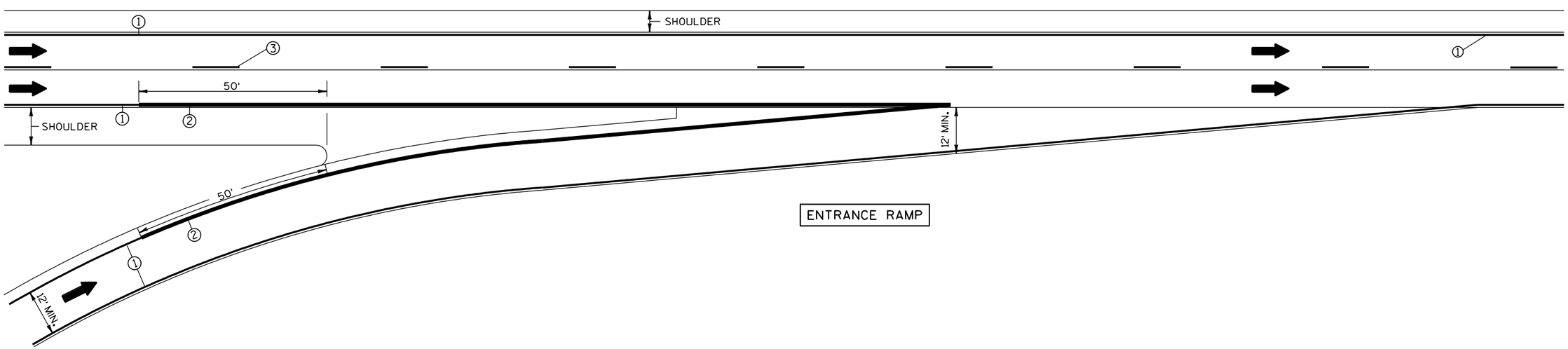

6

6

S.D.D. 15 C 31-1a

S.D.D. 15 C 31-1a

PAVEMENT MARKING
(RAMPS AND GORES)

STATE OF WISCONSIN
DEPARTMENT OF TRANSPORTATION

LEGEND

- POST WITH ATTACHED SIGN
- POST WITH ATTACHED SIGN IN DRUM
- DRUM WITH WARNING LIGHT (TYPE C)
- DRUM
- ARROW BOARD
- 8' TYPE III BARRICADE
- REMOVING PAVEMENT MARKING
- DIRECTION OF TRAFFIC

GENERAL NOTES :

THE EXACT NUMBER, LOCATION, AND SPACING OF ALL SIGNS AND DEVICES SHALL BE ADJUSTED TO FIT FIELD CONDITIONS AS APPROVED BY THE ENGINEER.

THE SPACING BETWEEN SIGNS SHOULD BE ADJUSTED TO NOT CONFLICT WITH AND TO PROVIDE A MINIMUM OF 200 FEET, (500 FEET DESIREABLE) DISTANCE TO EXISTING SIGNS.

THIS LANE CLOSURE IS TYPICAL FOR CLOSING RIGHT LANE - REVERSE FOR CLOSING LEFT LANE.

ALL SIGNS ARE 48"x48" UNLESS OTHERWISE NOTED.

"WO" IS THE SAME AS "W" EXCEPT THE BACKGROUND IS ORANGE.

ANY SIGNS TEMPORARY OR EXISTING, WHICH CONFLICT WITH TRAFFIC CONTROL "IN USE" SHALL BE REMOVED OR COVERED AS NEEDED AND AS APPROVED BY THE ENGINEER. NO WARNING LIGHTS SHALL BE WORKING ON "COVERED" OR "DOWNED" SIGNS.

(1) CONSIDER GEOMETRICS WHEN LOCATING SIGNS AND ARROW BOARD SO THE DRIVER HAS A CLEAR VIEW OF THE ARROW BOARD AND LANE CLOSURE DRUMS FOR A MINIMUM 1500 FEET IN FRONT OF DRUMS.

FOR A LANE CLOSURE THAT IS IN PLACE LESS THAN 7 CONTINUOUS DAYS AND NIGHTS, THE ADVANCED WARNING SIGNS MAY BE MOUNTED ON PORTABLE SUPPORTS.

GENERAL NOTES CONTINUED:

REMOVE PAVEMENT MARKINGS IF LANE CLOSURE IS TO BE IN PLACE FOR LONGER THAN 7 CONTINUOUS DAYS AND NIGHTS.

WARNING LIGHTS ARE NOT REQUIRED IF THE LANE CLOSURE IS A DAYTIME ONLY OPERATION.

IF THE HORIZONTAL ALIGNMENT IS SUCH THAT A CURVE MAY REQUIRE ADDITIONAL DELINEATION, THE DEVICE SPACING MAY BE DECREASED TO 50 FEET.

IF LANE CLOSURE IS MORE THAN 1 MILE, PLACE A TYPE III BARRICADE APPROXIMATELY EVERY 1/4 MILE ACROSS THE CLOSED LANE TO HELP ENFORCE THE DRUM LINE.

ADJUSTMENTS IN BUFFER SPACE NEED TO BE INCORPORATED WHEN THE LANE CLOSURE OCCURS NEAR AN INTERCHANGE EXIT OR ENTRANCE RAMP. THE LANE CLOSURE MUST MUST TAKE PLACE FAR ENOUGH IN ADVANCE OF AN EXIT OR ENTRANCE RAMP TO STILL ALLOW FOR ADEQUATE BUFFER SPACE. THE MINIMUM LENGTH OF THE BUFFER SPACE BEFORE AN EXIT RAMP SHOULD BE 1/2 THE LENGTH OF THE TRANSITION AREA. THE ENTRANCE RAMP SHOULD BE FOLLOWED BY THE ORIGINAL BUFFER SPACE LENGTH OF 800 FEET DESIRABLE PRIOR TO ANOTHER TRAFFIC CONTROL CHANGE SUCH AS A CROSSOVER MANEUVER.

* THE LEFT REVERSE CURVE SIGN (WO1-4L) IS ONLY REQUIRED WHEN THIS DETAIL IS USED IN COMBINATION WITH "SINGLE LANE CROSSOVER" DETAIL.

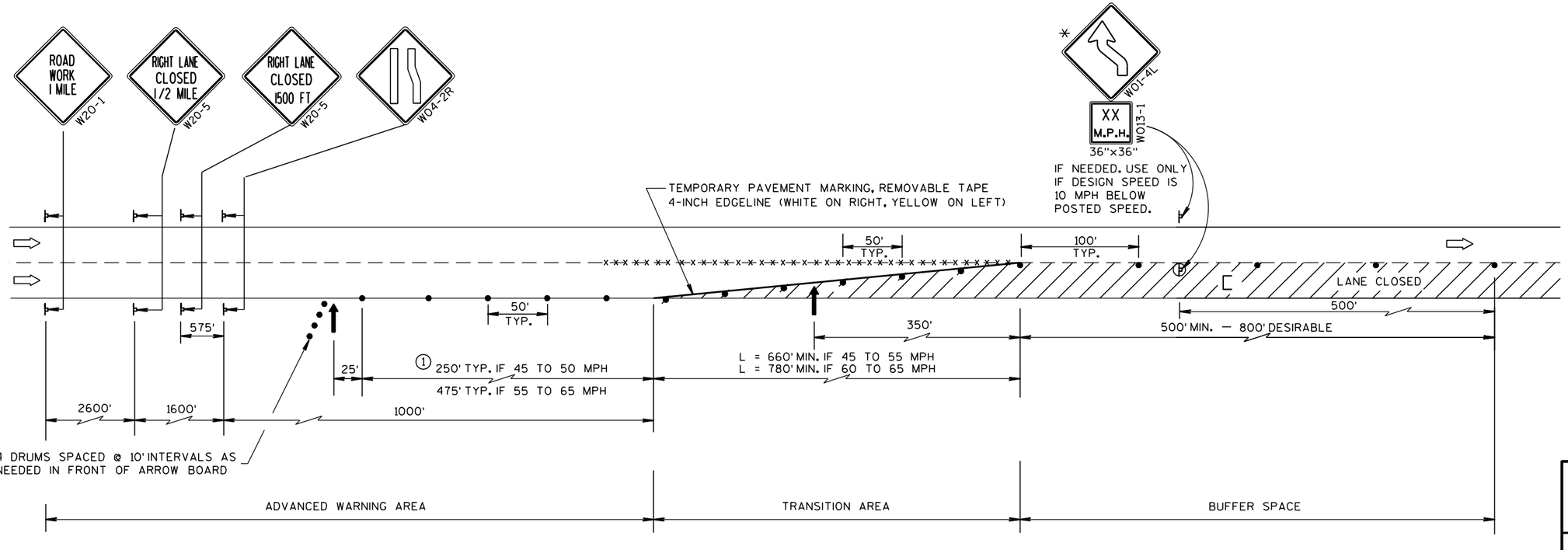

TRAFFIC CONTROL, LANE CLOSURE, SPEEDS GREATER THAN 40 M.P.H.

STATE OF WISCONSIN
DEPARTMENT OF TRANSPORTATION

APPROVED
8-7-95 — DATE
/S/ Chester J. [illegible] — DIRECTOR, OFFICE OF [illegible]
FHWA

SYMBOLS

IC/C	TYPE III BARRICADE (8' EQUIVALENT) WITH/WITHOUT SIGN
•	DRUM
	POST MOUNTED SIGN
(A)	WARNING LIGHT, TYPE A (FLASHING)
⇨	DIRECTION OF TRAFFIC

GENERAL NOTES

THIS RAMP CLOSURE DETAIL IS TYPICAL FOR CLOSING A RIGHT SIDE EXIT RAMP. FOR A LEFT SIDE EXIT RAMP, REVERSE THE TRAFFIC CONTROL.

THE EXACT NUMBER, LOCATION, AND SPACING OF ALL SIGNS AND DEVICES SHALL BE ADJUSTED TO FIT FIELD CONDITIONS AS APPROVED BY THE ENGINEER.

THE SPACING BETWEEN TRAFFIC CONTROL SIGNS SHOULD BE ADJUSTED TO NOT CONFLICT WITH AND SHOULD PROVIDE A MINIMUM OF 200 FEET (500 FEET DESIRABLE) CLEARANCE TO EXISTING SIGNS THAT WILL REMAIN IN PLACE.

ALL SIGNS ARE 48" X 48" UNLESS OTHERWISE NOTED.

SIGNS THAT WILL BE IN PLACE LESS THAN 7 CONTINUOUS DAYS AND NIGHTS MAY BE MOUNTED ON PORTABLE SUPPORTS.

ANY SIGNS TEMPORARY OR EXISTING, WHICH CONFLICT WITH TRAFFIC CONTROL "IN USE" SHALL BE REMOVED OR COVERED AS NEEDED AND AS APPROVED BY THE ENGINEER.

PLACE TEMPORARY PAVEMENT MARKING, REMOVABLE TAPE IF RAMP CLOSURE IS TO BE IN PLACE FOR 7 OR MORE CONTINUOUS DAYS AND NIGHTS.

WORK AREAS WITH A DROPOFF ALONG THE EDGE OF AN OPEN TRAVEL LANE SHALL BE LEVELED WITH TEMPORARY FILL WHEN THE CONTRACTOR IS NOT WORKING ADJACENT TO THE TRAVEL LANE. DRUMS SHALL BE PLACED ENTIRELY OUTSIDE THE TRAVEL LANE, ALLOWING THE FULL UNOBSTRUCTED LANE WIDTH, WHEN THE WORK IS NOT IN PROGRESS.

WHERE MEDIAN BARRIER IS IN PLACE, SIGNS SHOWN ON LEFT SIDE OF ROADWAY MAY BE OMITTED FOR RIGHT SIDE RAMP CLOSURES OF LESS THAN 12-HOUR DURATION.

*W20-1 AND G20-2A SIGNS ARE NOT REQUIRED IF THE RAMP CLOSURE IS WITHIN A LARGER WORK ZONE WHERE THESE SIGNS ARE ALREADY PRESENT.

**USE THE "RAMP WILL BE CLOSED" SIGN IF INDICATED IN MISCELLANEOUS QUANTITIES. PLACE 10 CALENDAR DAYS PRIOR TO CLOSURE OR AS DIRECTED BY THE ENGINEER. SEE WISCONSIN STANDARD SIGN PLATES FOR SIGN LAYOUT.

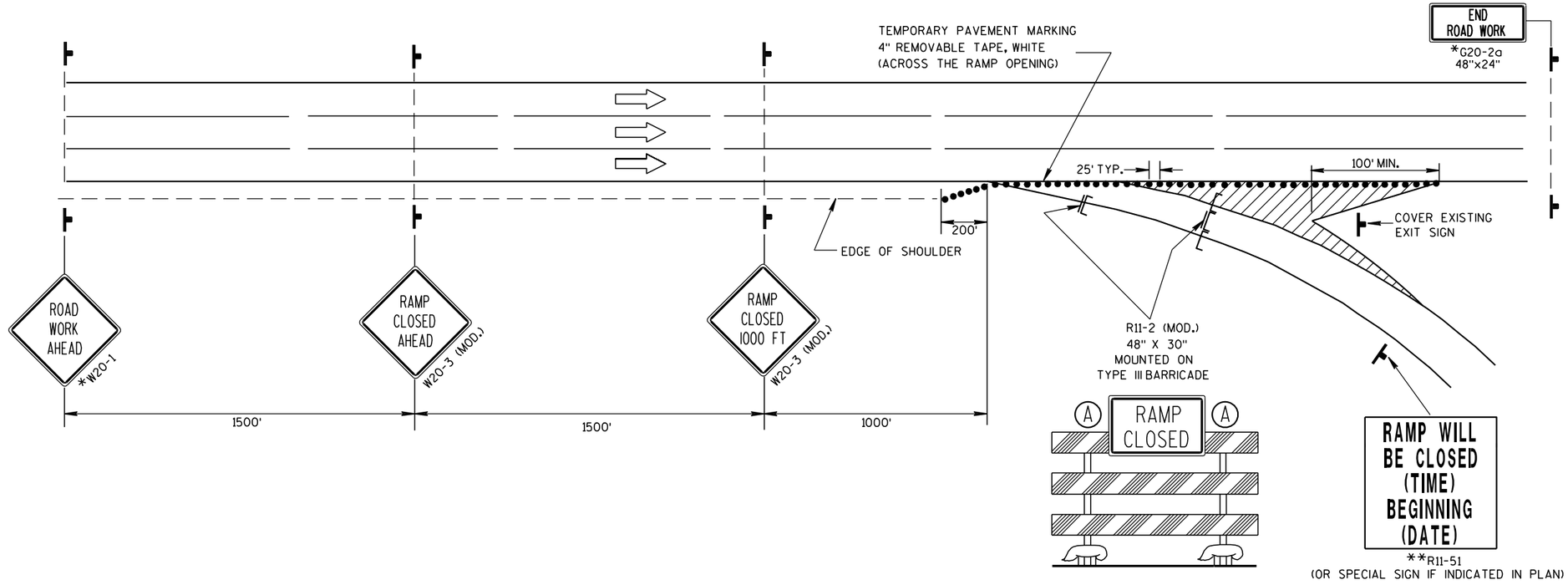

TRAFFIC CONTROL, EXIT RAMP CLOSURE

STATE OF WISCONSIN
DEPARTMENT OF TRANSPORTATION

APPROVED
5/23/2000 — DATE
/S/ Chester J. [illegible] — CHIEF SIGNS AND MAR[illegible] INEER
FHWA

SYMBOLS

- TRAFFIC CONTROL DRUM
- POST MOUNTED SIGN
- DIRECTION OF TRAFFIC FLOW
- ARROW BOARD IN CAUTION MODE

GENERAL NOTES

THIS DETAIL IS TYPICAL FOR CLOSING THE RIGHT SHOULDER. FOR CLOSING THE LEFT SHOULDER, REVERSE THE TRAFFIC CONTROL.

THIS DETAIL MAY BE USED FOR DIVIDED ROADWAYS WITH ANY NUMBER OF TRAVEL LANES.

THE EXACT NUMBER, LOCATION AND SPACING OF ALL SIGNS AND DEVICES SHALL BE ADJUSTED TO FIT FIELD CONDITIONS AS APPROVED BY THE ENGINEER.

ALL SIGNS ARE 48" X 48" UNLESS OTHERWISE NOTED.

SIGN LAYOUTS SHALL BE IN ACCORDANCE WITH THE FHWA'S MANUAL OF STANDARD HIGHWAY SIGNS OR THE WISCONSIN STANDARD SIGN PLATES.

SIGNS THAT WILL BE IN PLACE LESS THAN 7 CONTINUOUS DAYS AND NIGHTS MAY BE MOUNTED ON PORTABLE SUPPORTS.

ANY SIGNS TEMPORARY OR EXISTING, WHICH CONFLICT WITH TRAFFIC CONTROL "IN USE" SHALL BE REMOVED OR COVERED AS NEEDED AND AS APPROVED BY THE ENGINEER.

CHANNELIZING DEVICES PLACED ADJACENT TO THE WORK AREA SHALL BE PULLED BACK FROM THE TRAVEL LANE WHEN WORK IS NOT IN PROGRESS.

WHEN A RAMP INTERSECTS THE FACILITY ON WHICH THE WORK IS BEING PERFORMED, ADDITIONAL TRAFFIC CONTROLS SHALL BE PROVIDED AS SPECIFIED IN THE PLANS AND/OR THE SPECIAL PROVISIONS OR AS APPROVED BY THE ENGINEER.

*FOR SHORT DURATION SHOULDER WORK OF LESS THAN ONE HOUR, THE W21-5a SIGN MAY BE OMITTED.

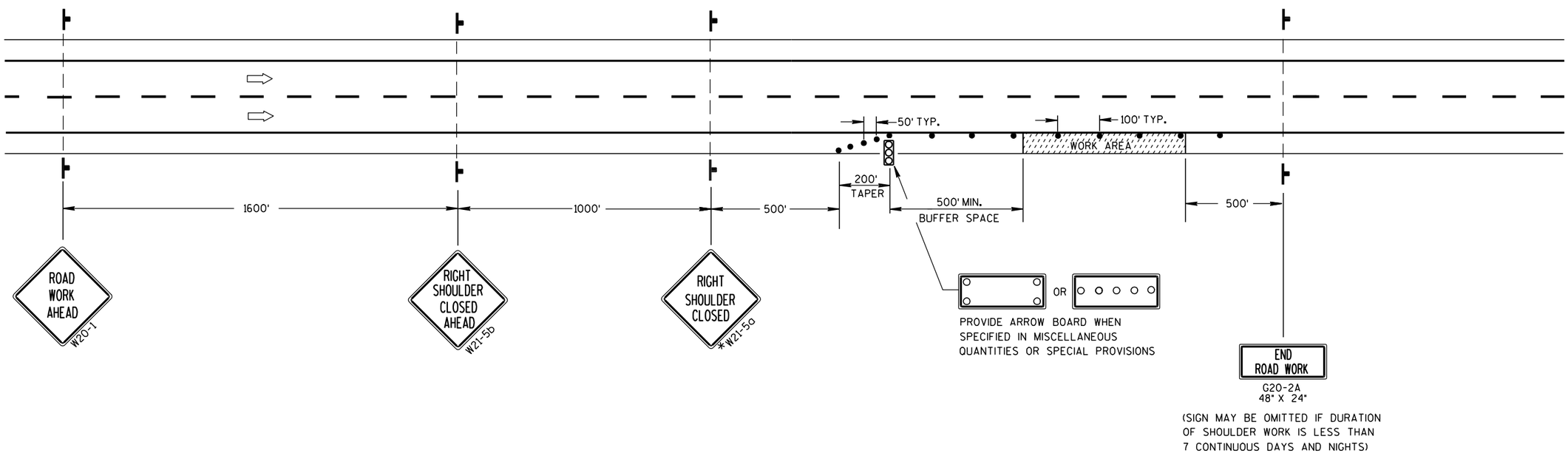

TRAFFIC CONTROL SHOULDER CLOSURE ON DIVIDED ROADWAY, SPEEDS GREATER THAN 40 MPH

STATE OF WISCONSIN
DEPARTMENT OF TRANSPORTATION

APPROVED

5/23/00 — DATE

/S/ Chester J Spaan — CHIEF SIGNS AND MAR INEER

FHWA

STATION	AREA (SF) Cut	Salvaged/Unusable Pavement Material	Fill	Marsh Exc	Rock Exc	EBS	Incremental Vol (CY) (Unadjusted) Cut Note 1	Salvaged/Unusable Pavement Material Note 2	Fill Note 3	Marsh Exc	Rock Exc	EBS	Cumulative Vol (CY) Cut 1.00 Note 1	Expanded Fill 1.25	Expanded Marsh Backfill 1.50 Note 4	Expanded Rock 1.10	Expanded EBS Backfill 1.30 Note 5	Reduced Marsh in Fill 0.60 Note 6	Reduced EBS In Fill 0.80 Note 7	Mass Ordinate Note 8
231+95	6.49	0.00	3.36	0.00	0.00	0.00	0	0	0	0	0	0	0	0	0	0	0	0.00	0.00	0.00
232+00	6.50	0.00	3.44	0.00	0.00	0.00	1	0	1	0	0	0	1	1	0	0	0	0.00	0.00	0.41
232+25	6.79	0.00	3.49	0.00	0.00	0.00	6	0	3	0	0	0	7	5	0	0	0	0.00	0.00	2.55
232+50	6.83	0.00	3.56	0.00	0.00	0.00	6	0	3	0	0	0	14	9	0	0	0	0.00	0.00	4.78
232+75	6.34	0.00	4.65	0.00	0.00	0.00	6	0	4	0	0	0	20	14	0	0	0	0.00	0.00	6.13
233+00	6.03	0.00	3.84	0.00	0.00	0.00	6	0	4	0	0	0	25	19	0	0	0	0.00	0.00	6.95
233+14.6	6.18	0.00	3.09	0.00	0.00	0.00	3	0	2	0	0	0	29	21	0	0	0	0.00	0.00	7.90
					Total		29	0	17	0	0	0								

STATION	AREA (SF) Cut	Salvaged/Unusable Pavement Material	Fill	Marsh Exc	Rock Exc	EBS	Incremental Vol (CY) (Unadjusted) Cut Note 1	Salvaged/Unusable Pavement Material Note 2	Fill Note 3	Marsh Exc	Rock Exc	EBS	Cumulative Vol (CY) Cut 1.00 Note 1	Expanded Fill 1.25	Expanded Marsh Backfill 1.50 Note 4	Expanded Rock 1.10	Expanded EBS Backfill 1.30 Note 5	Reduced Marsh in Fill 0.60 Note 6	Reduced EBS In Fill 0.80 Note 7	Mass Ordinate Note 8
235+13.2	5.53	0.00	5.56	0.00	0.00	0.00	0	0	0	0	0	0	0	0	0	0	0	0.00	0.00	0.00
235+25	5.85	0.00	6.08	0.00	0.00	0.00	2	0	3	0	0	0	2	3	0	0	0	0.00	0.00	-0.69
235+50	6.17	0.00	6.91	0.00	0.00	0.00	6	0	6	0	0	0	8	11	0	0	0	0.00	0.00	-2.64
235+75	6.28	0.00	5.89	0.00	0.00	0.00	6	0	6	0	0	0	14	18	0	0	0	0.00	0.00	-4.28
236+00	5.90	0.00	4.92	0.00	0.00	0.00	6	0	5	0	0	0	19	24	0	0	0	0.00	0.00	-4.90
236+25	5.56	0.00	4.87	0.00	0.00	0.00	5	0	5	0	0	0	25	30	0	0	0	0.00	0.00	-5.26
236+50	5.59	0.00	7.16	0.00	0.00	0.00	5	0	6	0	0	0	30	37	0	0	0	0.00	0.00	-7.06
236+75	5.80	0.00	9.16	0.00	0.00	0.00	5	0	8	0	0	0	35	46	0	0	0	0.00	0.00	-11.23
237+00	5.58	0.00	7.57	0.00	0.00	0.00	5	0	8	0	0	0	40	56	0	0	0	0.00	0.00	-15.64
237+25	5.53	0.00	7.72	0.00	0.00	0.00	5	0	7	0	0	0	46	65	0	0	0	0.00	0.00	-19.35
237+50	5.58	0.00	10.47	0.00	0.00	0.00	5	0	8	0	0	0	51	75	0	0	0	0.00	0.00	-24.73
237+75	5.60	0.00	10.74	0.00	0.00	0.00	5	0	10	0	0	0	56	88	0	0	0	0.00	0.00	-31.82
238+00	5.59	0.00	11.09	0.00	0.00	0.00	5	0	10	0	0	0	61	100	0	0	0	0.00	0.00	-39.27
238+25	6.18	0.00	10.20	0.00	0.00	0.00	5	0	10	0	0	0	67	113	0	0	0	0.00	0.00	-46.14
238+50	6.78	0.00	7.79	0.00	0.00	0.00	6	0	8	0	0	0	73	123	0	0	0	0.00	0.00	-50.55
238+75	7.02	0.00	2.72	0.00	0.00	0.00	6	0	5	0	0	0	79	129	0	0	0	0.00	0.00	-50.24
238+80.63	7.62	0.00	1.34	0.00	0.00	0.00	2	0	0	0	0	0	80	130	0	0	0	0.00	0.00	-49.25
238+85	7.93	0.00	1.02	0.00	0.00	0.00	1	0	0	0	0	0	82	130	0	0	0	0.00	0.00	-48.23
238+90	8.10	0.00	0.88	0.00	0.00	0.00	1	0	0	0	0	0	83	130	0	0	0	0.00	0.00	-46.96
238+95	8.42	0.00	0.83	0.00	0.00	0.00	2	0	0	0	0	0	85	130	0	0	0	0.00	0.00	-45.63
239+00	9.25	0.00	0.92	0.00	0.00	0.00	2	0	0	0	0	0	86	131	0	0	0	0.00	0.00	-44.20
239+05	9.35	0.00	2.12	0.00	0.00	0.00	2	0	0	0	0	0	88	131	0	0	0	0.00	0.00	-42.83
239+10	9.09	0.00	3.60	0.00	0.00	0.00	2	0	1	0	0	0	90	132	0	0	0	0.00	0.00	-41.78
239+15	8.67	0.00	2.70	0.00	0.00	0.00	2	0	1	0	0	0	91	132	0	0	0	0.00	0.00	-40.87
239+20	8.03	0.00	3.27	0.00	0.00	0.00	2	0	1	0	0	0	93	133	0	0	0	0.00	0.00	-40.01
239+25	7.14	0.00	4.29	0.00	0.00	0.00	1	0	1	0	0	0	94	134	0	0	0	0.00	0.00	-39.48
239+30	6.87	0.00	3.59	0.00	0.00	0.00	1	0	1	0	0	0	96	135	0	0	0	0.00	0.00	-39.10
239+33.44	6.69	0.00	3.28	0.00	0.00	0.00	1	0	0	0	0	0	97	135	0	0	0	0.00	0.00	-38.78
239+50	6.97	0.00	2.57	0.00	0.00	0.00	4	0	2	0	0	0	101	138	0	0	0	0.00	0.00	-36.84
239+75	7.28	0.00	1.31	0.00	0.00	0.00	7	0	2	0	0	0	107	140	0	0	0	0.00	0.00	-32.48
240+00	0.00	0.00	0.00	0.00	0.00	0.00	3	0	1	0	0	0	111	141	0	0	0	0.00	0.00	-29.87
					Total		111	0	112	0	0	0								

Notes
1) Common Excavation is the sum of the Cut and EBS Excavation columns. Item number 205.0100
2) Salvaged/Unsuable Pavement Material is included in Cut.
3) EBS Excavation to be backfilled with Select Borrow material. Note: this is designers choice, can be backfilled with Borrow, or Cut as well.
4) Salvaged/Unusable Pavement Material
5) Available Material = Cut - Salvaged/Unusuable Pavement Material
6) Marsh Excavation - to be backfilled with Select Borrow Material. Note: this is designers choice, can be backfilled with Borrow, or Cut as well. Item number 20505
7) Rock Excavation item number 205.0200
8) Reduced Marsh in Fill - Excavated Marsh material is usuable in Fills outside the 1:1 slope. Marsh in Fill Reduction factor = 0.6
9) Reduced EBS in Fill - Excavated EBS material is usuable in Fills outside the 1:1 slope. EBS in Fill Reduction factor = 0.8
10) Expanded Marsh Backfill - This is to be filled with Select Borrow material. Marsh Backfill Factor = 1.5. Item number 208.1100
11) Expanded EBS Backfill - This is to be filled with Select Borrow material. EBS Backfill Factor = 1.3. Item number 208.1100
12) Expanded Rock - Factor = 1.1
13) Expanded Fill. Factor = 1.25
Depending on selections: **Expanded Fill = (Unexpanded Fill - Rock* Rock Factor - Reduced Marsh - Reduced EBS) * Fill Factor**
Or Expanded Fill = (Unexpanded Fill - Rock* Rock Factor - Reduced EBS) * Fill Factor
Or Expanded Fill = (Unexpanded Fill - Rock* Rock Factor - Reduced Marsh) * Fill Factor
Or Expanded Fill = (Unexpanded Fill - Rock* Rock Factor) * Fill Factor
14) The Mass Ordinate + or - Qty calculated for the Division. Plus quantity indicates an excess of material within the Division. Minus indicates a shortage of material within the Division.

STATION	Real Station	Distance	AREA (SF) Cut	Salvaged/Unusable Pavement Material	Fill	Marsh Exc	Rock Exc	EBS	Incremental Vol (CY) (Unadjusted) Cut Note 1	Salvaged/Unusable Pavement Material Note 2	Fill Note 3	Marsh Exc	Rock Exc	EBS	Cumulative Vol (CY) Cut 1.00 Note 1	Expanded Fill 1.25	Expanded Marsh Backfill 1.50 Note 4	Expanded Rock 1.10	Expanded EBS Backfill 1.30 Note 5	Reduced Marsh in Fill 0.60 Note 6	Reduced EBS In Fill 0.80 Note 7	Mass Ordinate Note 8
02+25	225.00	0.00	5.85	0.00	5.96	0.00	0.00	0.00	0	0	0	0	0	0	0	0	0	0	0	0.00	0.00	0.00
02+50	250.00	25.00	7.30	0.00	3.48	0.00	0.00	0.00	6	0	4	0	0	0	6	5	0	0	0	0.00	0.00	0.63
02+75	275.00	25.00	6.82	0.00	5.14	0.00	0.00	0.00	7	0	4	0	0	0	13	10	0	0	0	0.00	0.00	2.18
02+94.52	294.52	19.52	6.80	0.00	6.33	0.00	0.00	0.00	5	0	4	0	0	0	18	16	0	0	0	0.00	0.00	1.92
03+00	300.00	5.48	6.83	0.00	6.58	0.00	0.00	0.00	1	0	1	0	0	0	19	17	0	0	0	0.00	0.00	1.67
03+25	325.00	25.00	6.40	0.00	6.78	0.00	0.00	0.00	6	0	6	0	0	0	25	25	0	0	0	0.00	0.00	0.06
03+50	350.00	25.00	6.71	0.00	5.24	0.00	0.00	0.00	6	0	6	0	0	0	31	32	0	0	0	0.00	0.00	-0.83
03+75	375.00	25.00	6.59	0.00	4.06	0.00	0.00	0.00	6	0	4	0	0	0	37	37	0	0	0	0.00	0.00	-0.05
04+00	400.00	25.00	6.48	0.00	3.89	0.00	0.00	0.00	6	0	4	0	0	0	43	42	0	0	0	0.00	0.00	1.39
04+25	425.00	25.00	5.35	0.00	5.08	0.00	0.00	0.00	5	0	4	0	0	0	49	47	0	0	0	0.00	0.00	1.67
04+50	450.00	25.00	5.64	0.00	4.03	0.00	0.00	0.00	5	0	4	0	0	0	54	52	0	0	0	0.00	0.00	1.49
04+75	475.00	25.00	6.35	0.00	2.01	0.00	0.00	0.00	6	0	3	0	0	0	59	56	0	0	0	0.00	0.00	3.54
05+00	500.00	25.00	6.84	0.00	1.43	0.00	0.00	0.00	6	0	2	0	0	0	66	58	0	0	0	0.00	0.00	7.65
05+18.22	518.22	18.22	5.46	0.00	2.01	0.00	0.00	0.00	4	0	1	0	0	0	70	59	0	0	0	0.00	0.00	10.35
05+25	525.00	6.78	5.39	0.00	2.22	0.00	0.00	0.00	1	0	1	0	0	0	71	60	0	0	0	0.00	0.00	11.05
05+50	550.00	25.00	5.21	0.00	3.99	0.00	0.00	0.00	5	0	3	0	0	0	76	64	0	0	0	0.00	0.00	12.36
05+75	575.00	25.00	5.08	0.00	2.41	0.00	0.00	0.00	5	0	3	0	0	0	81	67	0	0	0	0.00	0.00	13.42
06+00	600.00	25.00	7.24	0.00	0.68	0.00	0.00	0.00	6	0	1	0	0	0	86	69	0	0	0	0.00	0.00	17.34
06+25	625.00	25.00	6.19	0.00	1.54	0.00	0.00	0.00	6	0	1	0	0	0	93	70	0	0	0	0.00	0.00	22.27
06+50	650.00	25.00	6.38	0.00	2.02	0.00	0.00	0.00	6	0	2	0	0	0	98	72	0	0	0	0.00	0.00	26.03
06+75	675.00	25.00	7.67	0.00	2.47	0.00	0.00	0.00	7	0	2	0	0	0	105	75	0	0	0	0.00	0.00	29.95
07+00	700.00	25.00	5.72	0.00	2.89	0.00	0.00	0.00	6	0	2	0	0	0	111	78	0	0	0	0.00	0.00	33.04
07+25	725.00	25.00	5.71	0.00	3.71	0.00	0.00	0.00	5	0	3	0	0	0	116	82	0	0	0	0.00	0.00	34.52
07+41.93	741.93	16.93	5.52	0.00	4.71	0.00	0.00	0.00	4	0	3	0	0	0	120	85	0	0	0	0.00	0.00	34.74
07+45	745.00	3.07	5.92	0.00	4.88	0.00	0.00	0.00	1	0	1	0	0	0	121	86	0	0	0	0.00	0.00	34.71
07+50	750.00	5.00	6.58	0.00	4.97	0.00	0.00	0.00	1	0	1	0	0	0	122	87	0	0	0	0.00	0.00	34.72
07+55	755.00	5.00	7.40	0.00	3.83	0.00	0.00	0.00	1	0	1	0	0	0	123	88	0	0	0	0.00	0.00	35.00
07+60	760.00	5.00	7.44	0.00	3.22	0.00	0.00	0.00	1	0	1	0	0	0	124	89	0	0	0	0.00	0.00	35.56
07+65	765.00	5.00	7.41	0.00	2.92	0.00	0.00	0.00	1	0	1	0	0	0	126	90	0	0	0	0.00	0.00	36.22
07+70	770.00	5.00	7.46	0.00	2.98	0.00	0.00	0.00	1	0	1	0	0	0	127	90	0	0	0	0.00	0.00	36.92
07+74.55	774.55	4.55	7.42	0.00	3.50	0.00	0.00	0.00	1	0	1	0	0	0	128	91	0	0	0	0.00	0.00	37.49
07+75	775.00	0.45	7.38	0.00	3.43	0.00	0.00	0.00	0	0	0	0	0	0	129	91	0	0	0	0.00	0.00	37.54
07+80	780.00	5.00	7.46	0.00	2.74	0.00	0.00	0.00	1	0	1	0	0	0	130	92	0	0	0	0.00	0.00	38.20
07+85	785.00	5.00	7.51	0.00	2.71	0.00	0.00	0.00	1	0	1	0	0	0	131	92	0	0	0	0.00	0.00	38.96
07+90	790.00	5.00	7.67	0.00	3.25	0.00	0.00	0.00	1	0	1	0	0	0	133	93	0	0	0	0.00	0.00	39.67
07+95	795.00	5.00	7.73	0.00	3.19	0.00	0.00	0.00	1	0	1	0	0	0	134	94	0	0	0	0.00	0.00	40.35
08+00	800.00	5.00	8.01	0.00	3.59	0.00	0.00	0.00	1	0	1	0	0	0	136	95	0	0	0	0.00	0.00	41.03
08+05	805.00	5.00	7.71	0.00	3.27	0.00	0.00	0.00	1	0	1	0	0	0	137	95	0	0	0	0.00	0.00	41.69
08+07.17	807.17	2.17	7.49	0.00	3.15	0.00	0.00	0.00	1	0	0	0	0	0	138	96	0	0	0	0.00	0.00	41.98
08+25	825.00	17.83	6.88	0.00	1.40	0.00	0.00	0.00	5	0	2	0	0	0	142	98	0	0	0	0.00	0.00	44.84
08+50	850.00	25.00	7.22	0.00	1.48	0.00	0.00	0.00	7	0	1	0	0	0	149	99	0	0	0	0.00	0.00	49.71
08+75	875.00	25.00	6.70	0.00	1.45	0.00	0.00	0.00	6	0	1	0	0	0	155	101	0	0	0	0.00	0.00	54.46
09+00	900.00	25.00	6.37	0.00	1.62	0.00	0.00	0.00	6	0	1	0	0	0	161	103	0	0	0	0.00	0.00	58.73
09+13.37	913.37	13.37	0.00	0.00	0.00	0.00	0.00	0.00	2	0	0	0	0	0	163	103	0	0	0	0.00	0.00	59.81
							Total		163	0	83	0	0	0								

Notes
1) Common Excavation is the sum of the Cut and EBS Excavation columns. Item number 205.0100
2) Salvaged/Unsuable Pavement Material is included in Cut.
3) EBS Excavation to be backfilled with Select Borrow material. Note: this is designers choice, can be backfilled with Borrow, or Cut as well.
4) Salvaged/Unusable Pavement Material
5) Available Material = Cut - Salvaged/Unusuable Pavement Material
6) Marsh Excavation - to be backfilled with Select Borrow Material. Note: this is designers choice, can be backfilled with Borrow, or Cut as well. Item number 20505
7) Rock Excavation item number 205.0200
8) Reduced Marsh in Fill - Excavated Marsh material is usuable in Fills outside the 1:1 slope. Marsh in Fill Reduction factor = 0.6
9) Reduced EBS in Fill - Excavated EBS material is usuable in Fills outside the 1:1 slope. EBS in Fill Reduction factor = 0.8
10) Expanded Marsh Backfill - This is to be filled with Select Borrow material. Marsh Backfill Factor = 1.5. Item number 208.1100
11) Expanded EBS Backfill - This is to be filled with Select Borrow material. EBS Backfill Factor = 1.3. Item number 208.1100
12) Expanded Rock - Factor = 1.1
13) Expanded Fill. Factor = 1.25
Depending on selections: **Expanded Fill = (Unexpanded Fill - Rock* Rock Factor - Reduced Marsh - Reduced EBS) * Fill Factor**
Or Expanded Fill = (Unexpanded Fill - Rock* Rock Factor - Reduced EBS) * Fill Factor
Or Expanded Fill = (Unexpanded Fill - Rock* Rock Factor - Reduced Marsh) * Fill Factor
Or Expanded Fill = (Unexpanded Fill - Rock* Rock Factor) * Fill Factor
14) The Mass Ordinate + or - Qty calculated for the Division. Plus quantity indicates an excess of material within the Division. Minus indicates a shortage of material within the Division.

9 9

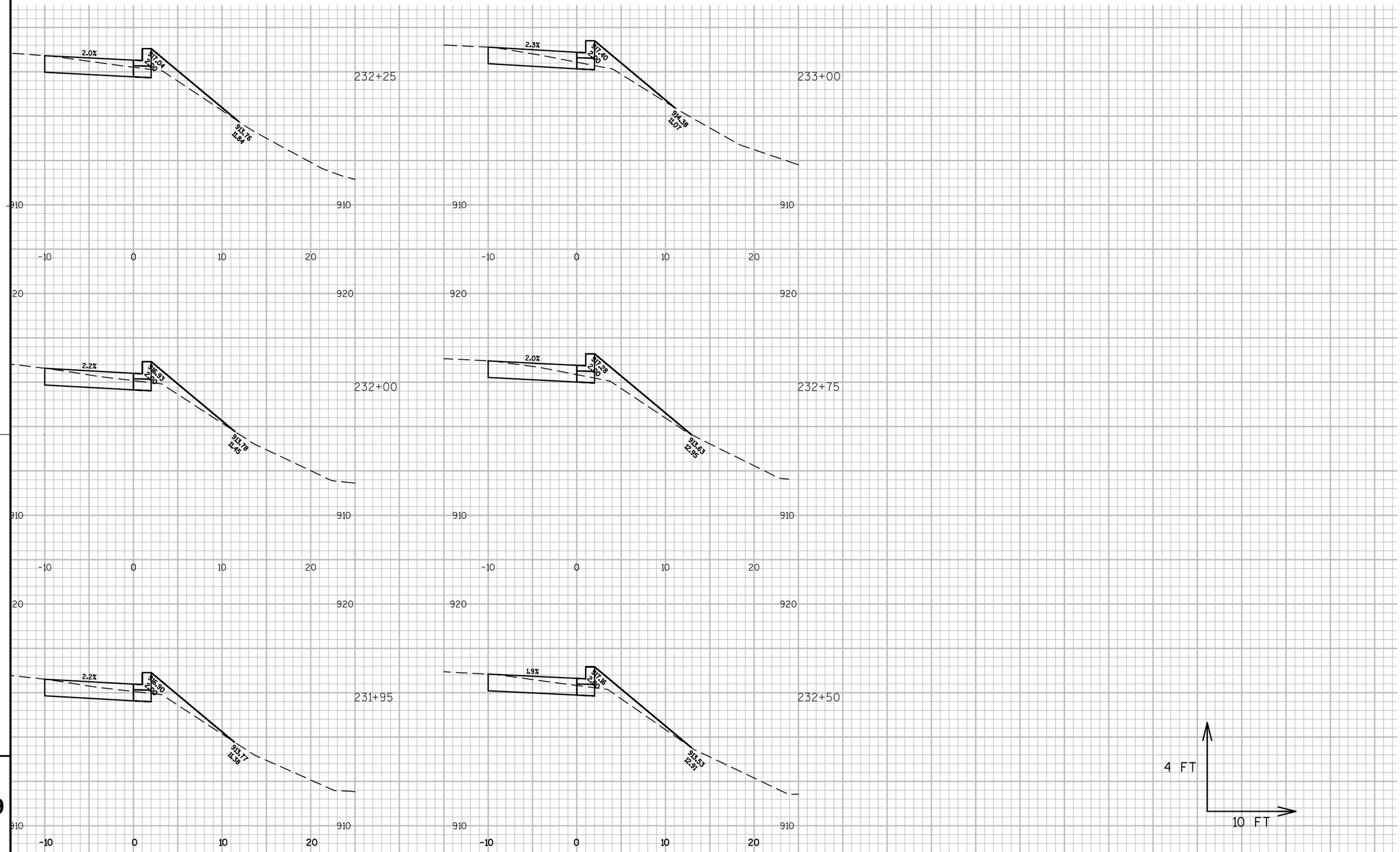

9

9

PROJECT NO:1016-05-78	HWY:REST AREAS 9 & 10	COUNTY:JUNEAU	CROSS SECTIONS:REST AREA 9	SHEET 99	E

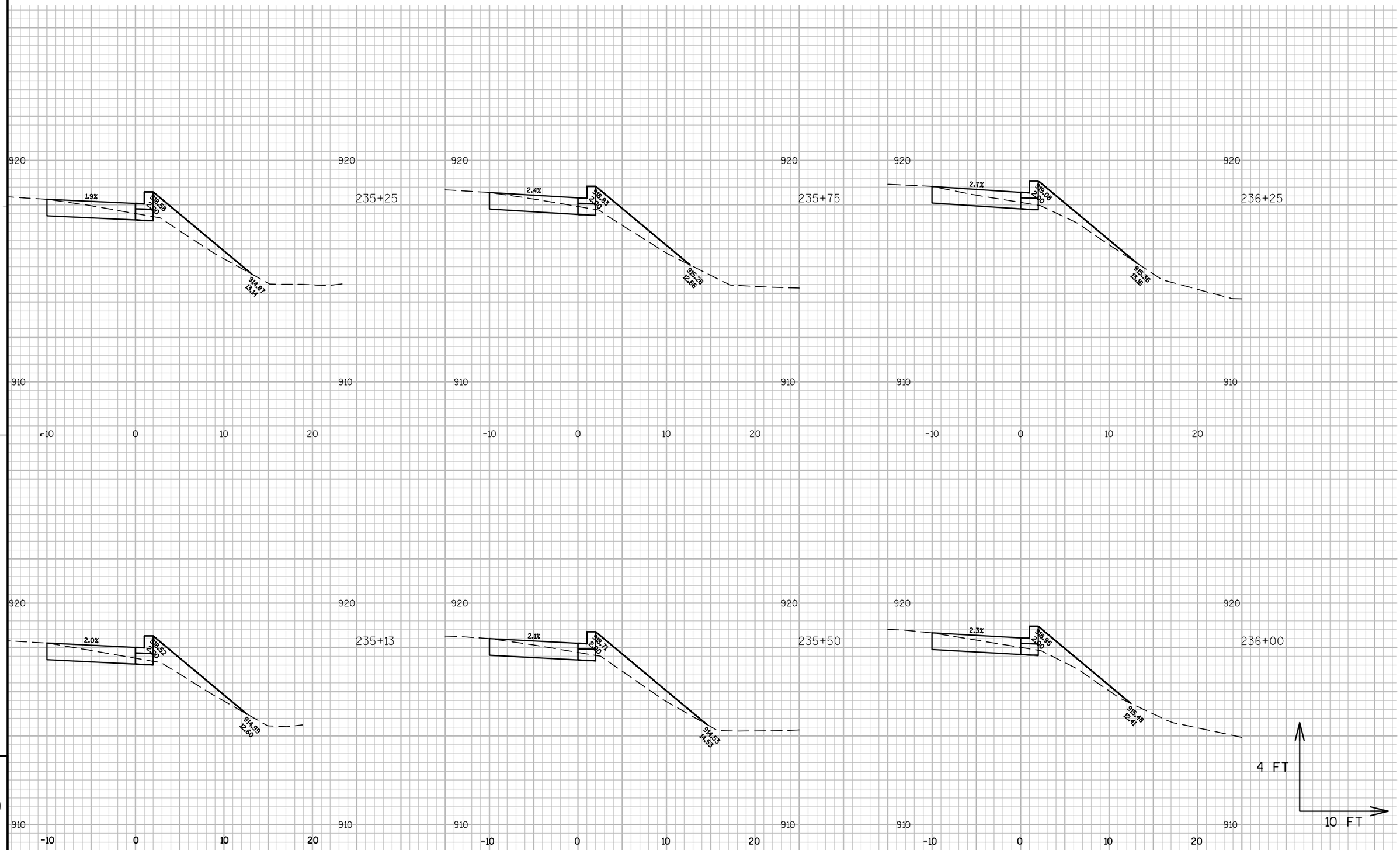

9

9

PROJECT NO:1016-05-78	HWY:REST AREAS 9 & 10	COUNTY:JUNEAU	CROSS SECTIONS:REST AREA 9	SHEET 100	E

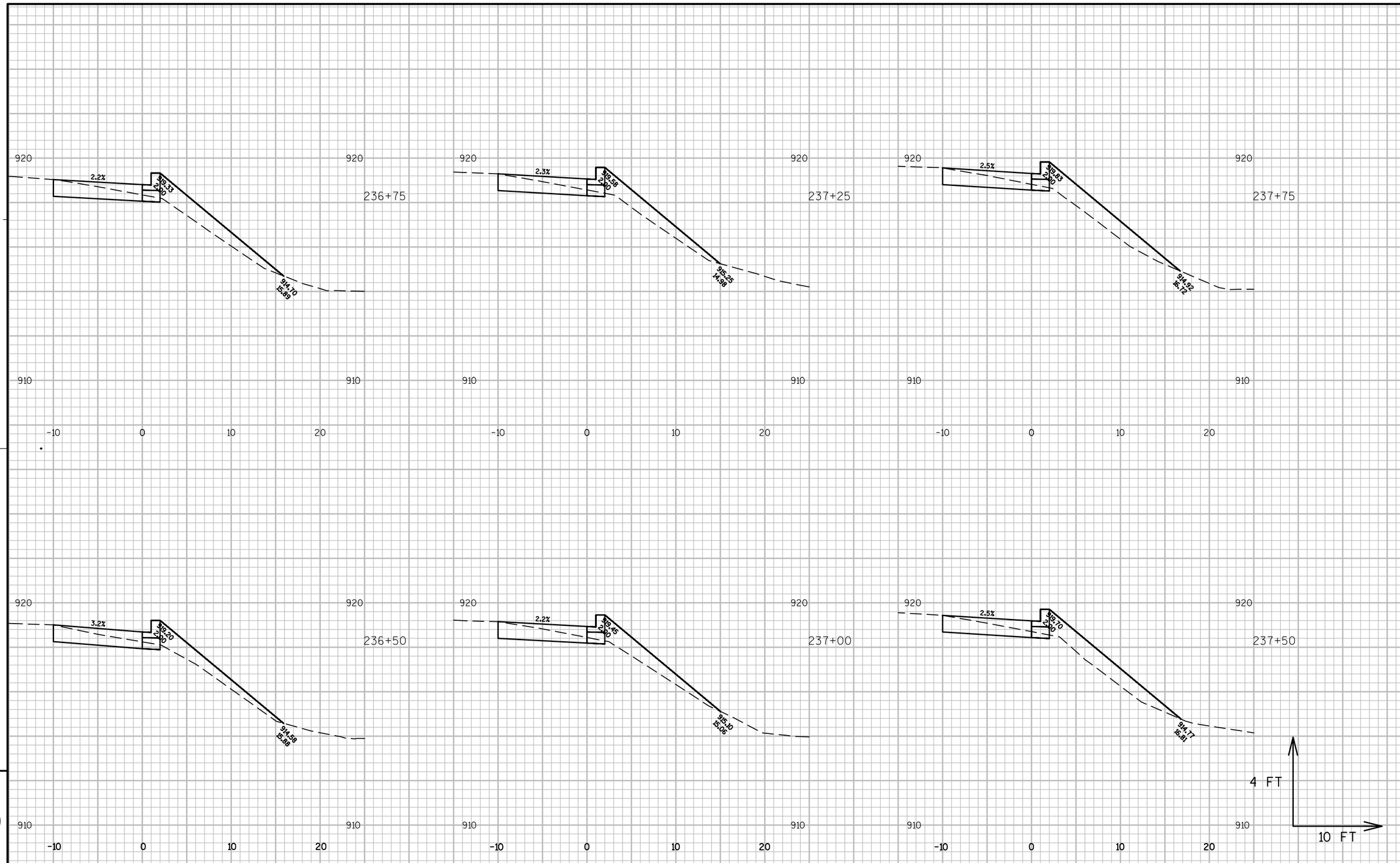

9

9

PROJECT NO:1016-05-78	HWY:REST AREAS 9 & 10	COUNTY:JUNEAU	CROSS SECTIONS:REST AREA 9	SHEET 101	E

FILE NAME : W:\03 PAVTROAD\DOTRJS\RA9_10_26\RA 9_10\CAD\SHEETSPLAN\090203_XS.DWG PLOT DATE : 1/4/2013 9:25 AM PLOT BY : SCHMALE, RICHARD J PLOT NAME : ---------- PLOT SCALE : 1 IN:10 FT

WISDOT/CADDS SHEET 49

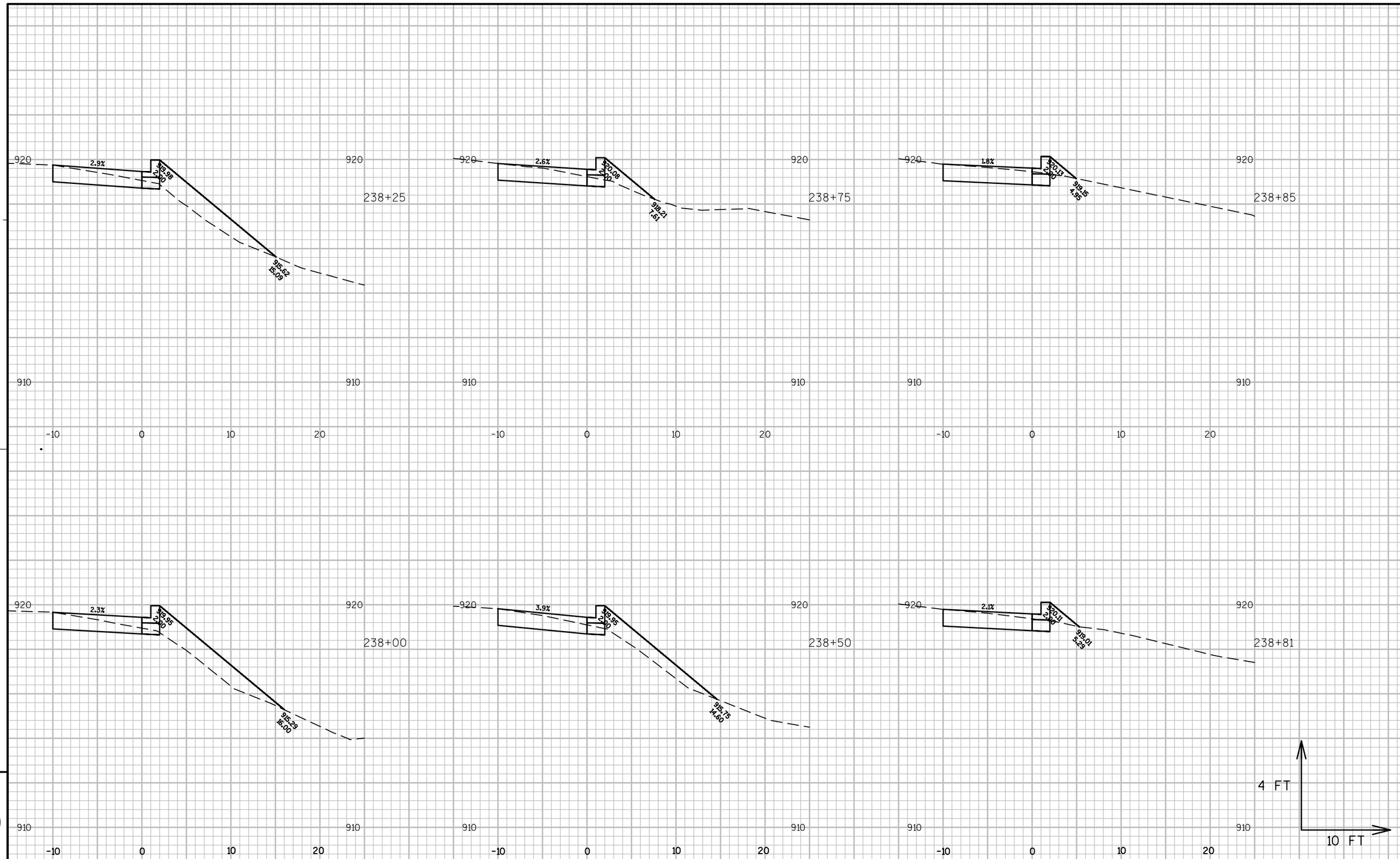

PROJECT NO:1016-05-78	HWY:REST AREAS 9 & 10	COUNTY:JUNEAU	CROSS SECTIONS:REST AREA 9	SHEET 102	E

FILE NAME : W:\03 PAVTROAD\DOTRJS\RA9_10_26\RA 9_10\CAD\SHEETSPLAN\090204_XS.DWG PLOT DATE : 1/4/2013 9:26 AM PLOT BY : SCHMALE, RICHARD J PLOT NAME : ---------- PLOT SCALE : 1 IN:10 FT

WISDOT/CADDS SHEET 49

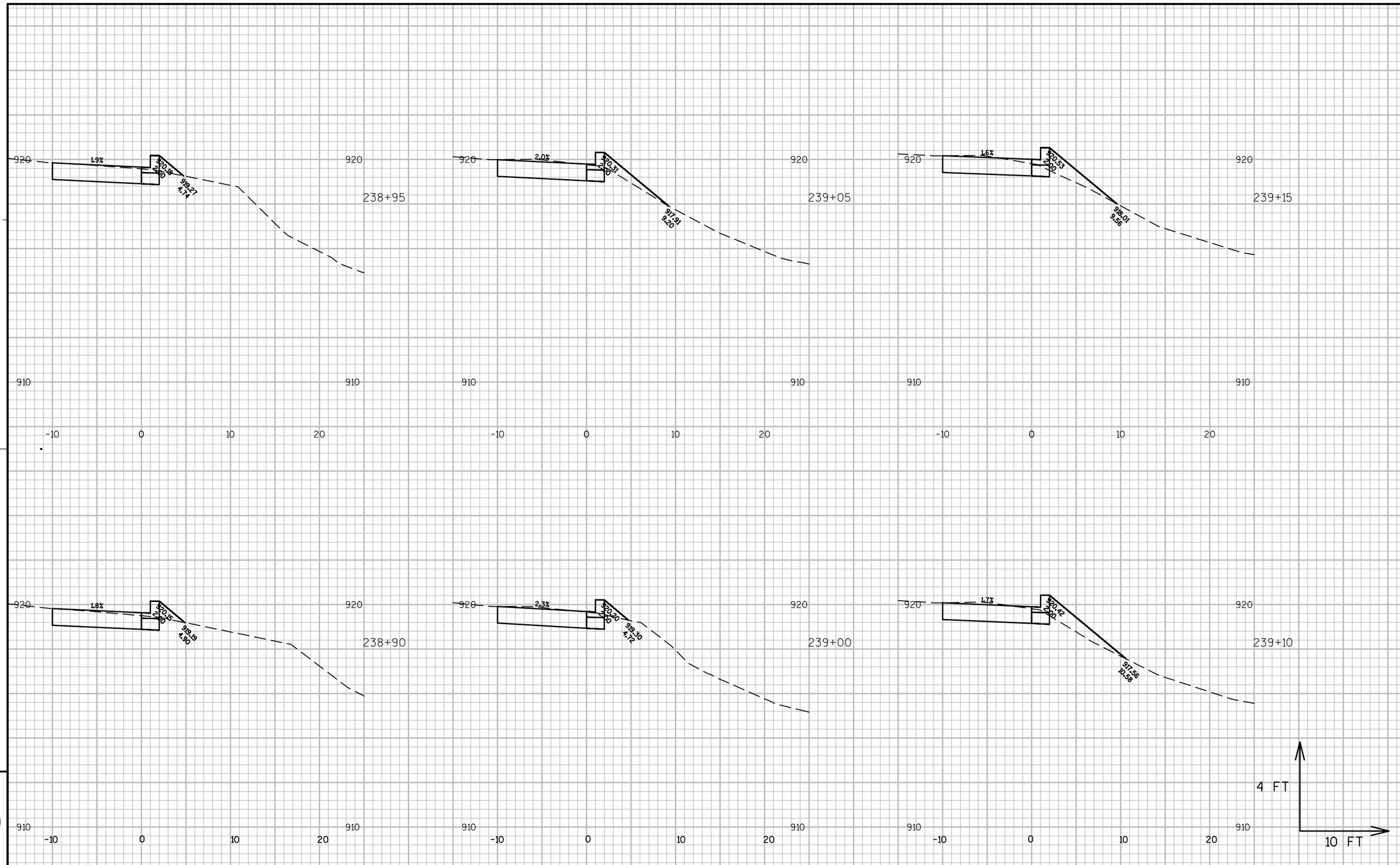

9

9

PROJECT NO:1016-05-78	HWY:REST AREAS 9 & 10	COUNTY:JUNEAU	CROSS SECTIONS:REST AREA 9	SHEET	E

FILE NAME : W:\03 PAVTROAD\DOTRJS\RA9_10_26\RA 9_10\CAD\SHEETSPLAN\090205_XS.DWG PLOT DATE : 1/4/2013 9:26 AM PLOT BY : SCHMALE, RICHARD J PLOT NAME : ---------- PLOT SCALE : 1 IN:10 FT

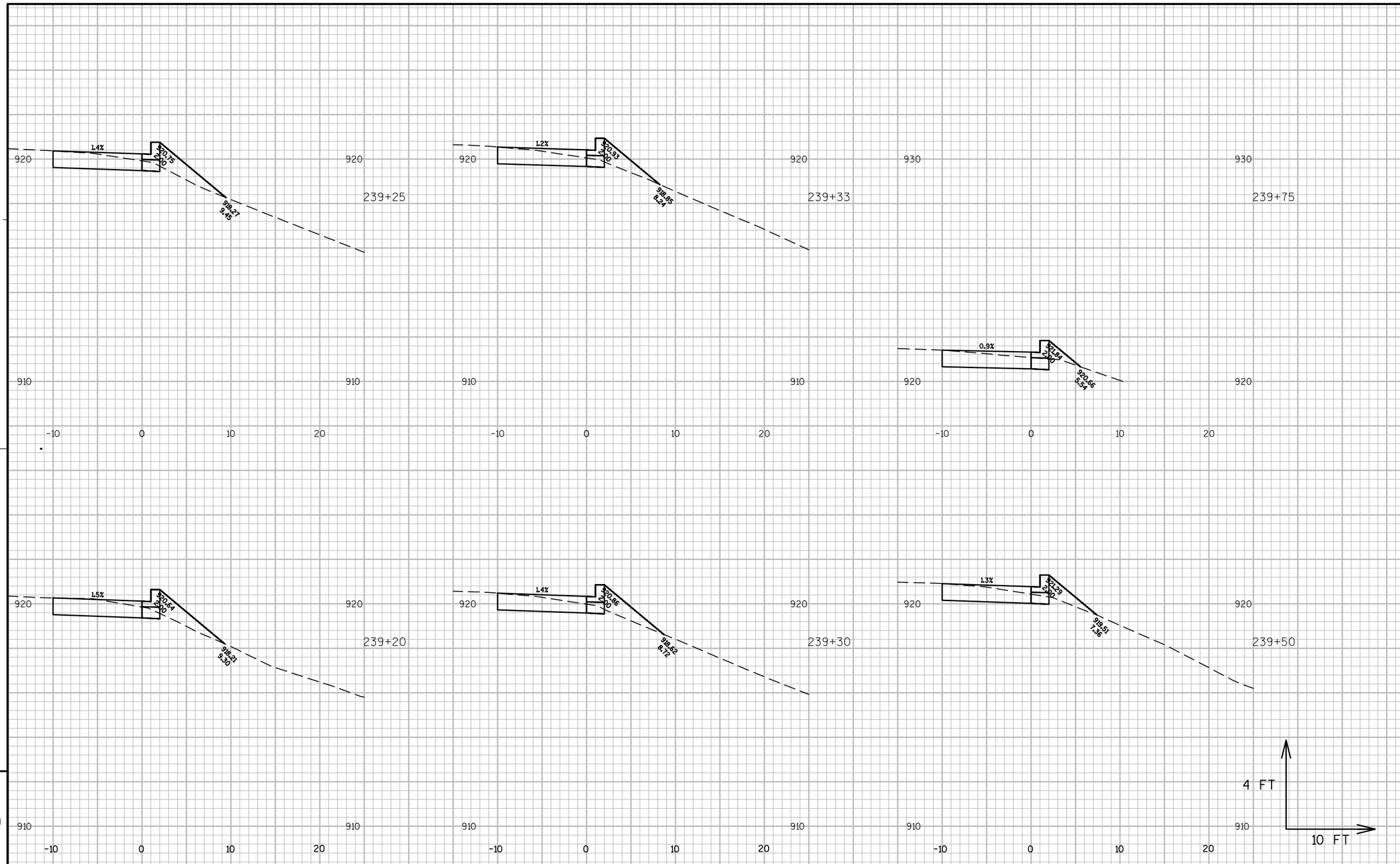

PROJECT NO:1016-05-78	HWY:REST AREAS 9 & 10	COUNTY:JUNEAU	CROSS SECTIONS:REST AREA 9	SHEET 104	E

FILE NAME : W:\03 PAVTROAD\DOTRJS\RA9_10_26\RA 9_10\CAD\SHEETSPLAN\090206_XS.DWG PLOT DATE : 1/4/2013 9:27 AM PLOT BY : SCHMALE, RICHARD J PLOT NAME : ---------- PLOT SCALE : 1 IN:10 FT

WISDOT/CADDS SHEET 49

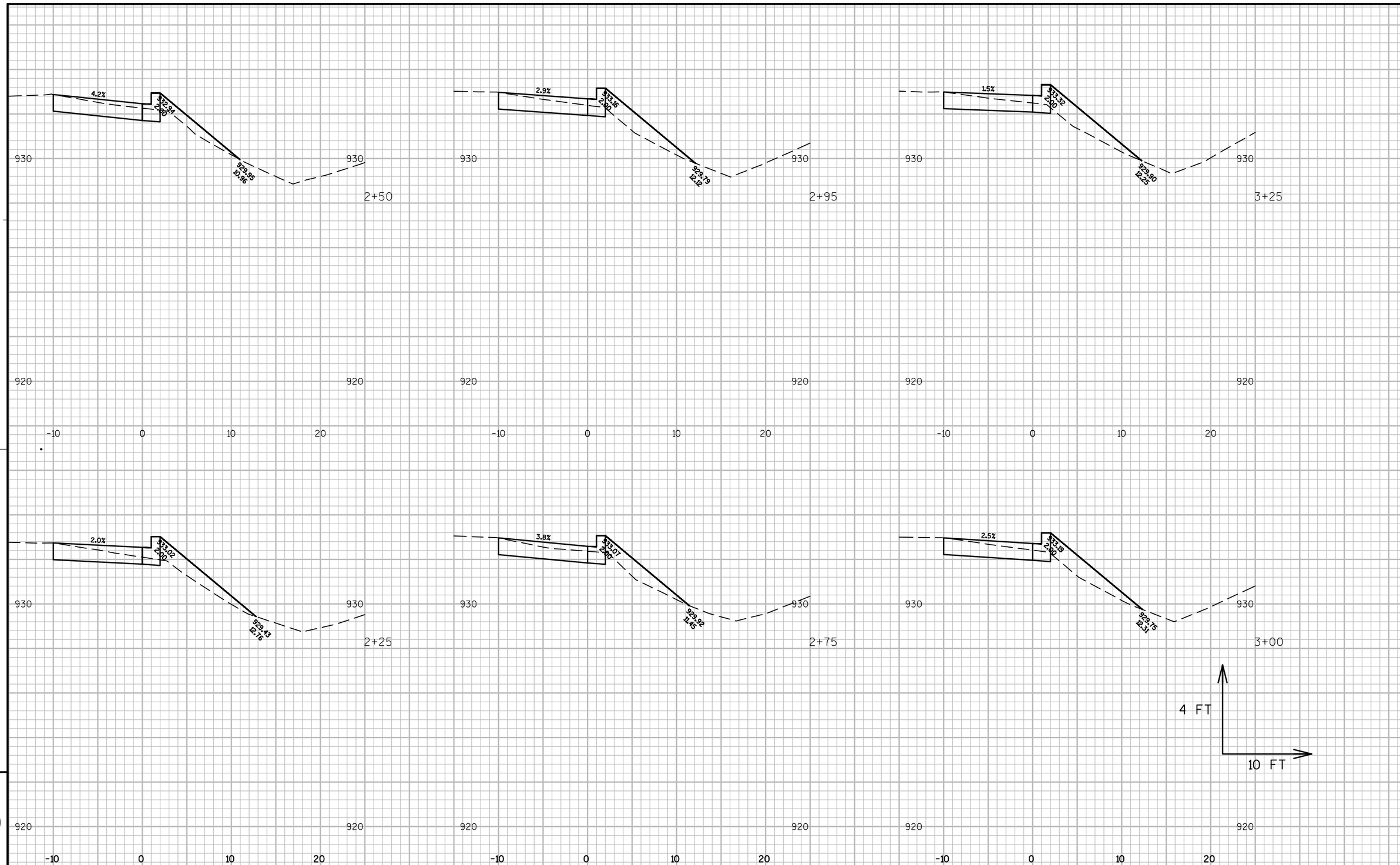

PROJECT NO:1016-05-78	HWY:REST AREAS 9 & 10	COUNTY:JUNEAU	CROSS SECTIONS:REST AREA 10	SHEET 105	E

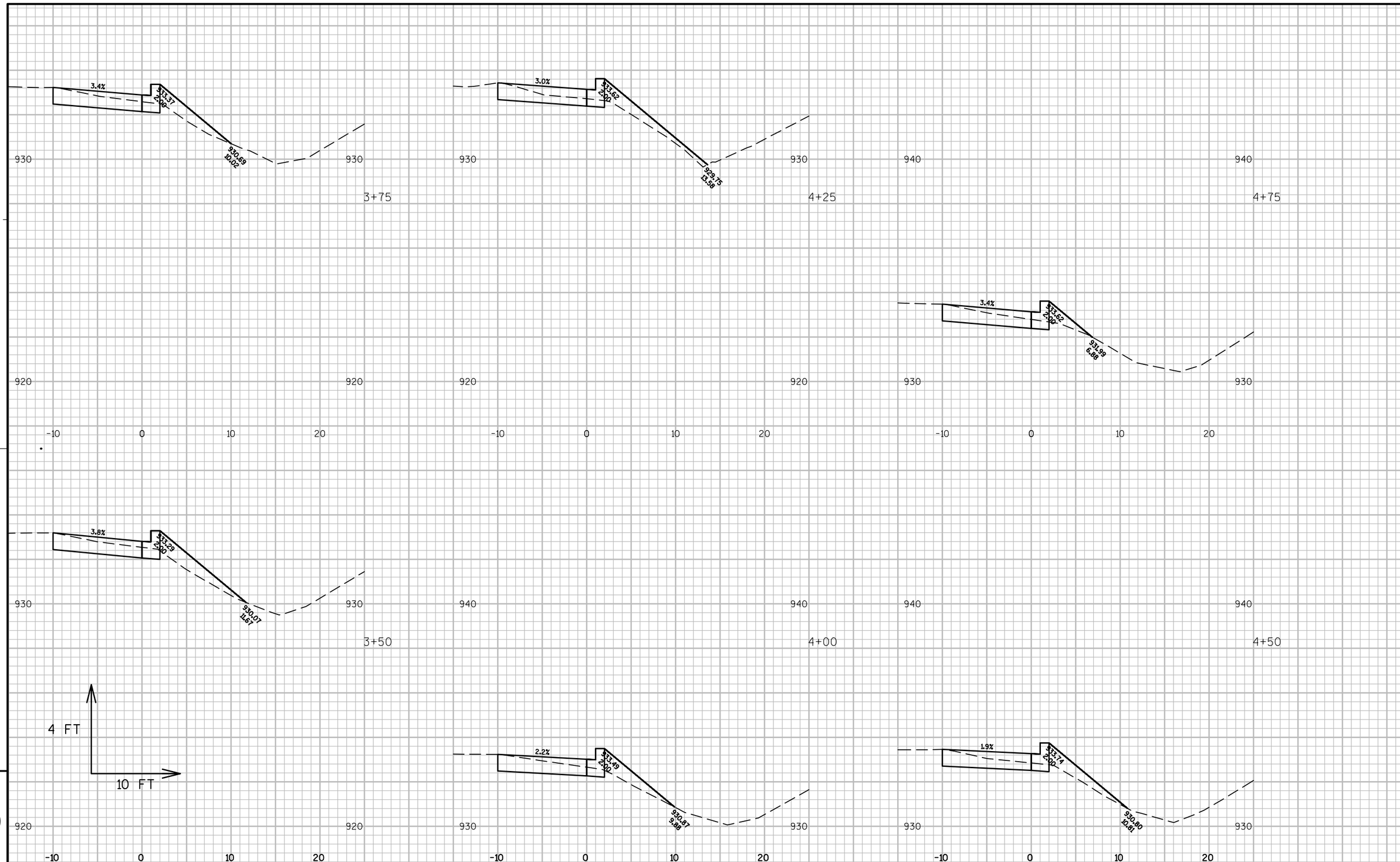

PROJECT NO:1016-05-78	HWY:REST AREAS 9 & 10	COUNTY:JUNEAU	CROSS SECTIONS:REST AREA 10	SHEET	E

9 9

FILE NAME : W:\03 PAVTROAD\DOTRJS\RA9_10_26\RA 9_10\CAD\SHEETSPLAN\090212_XS.DWG PLOT DATE : 1/4/2013 9:28 AM PLOT BY : SCHMALE, RICHARD J PLOT NAME : PLOT SCALE : 1 IN:10 FT

WISDOT/CADDS SHEET 49

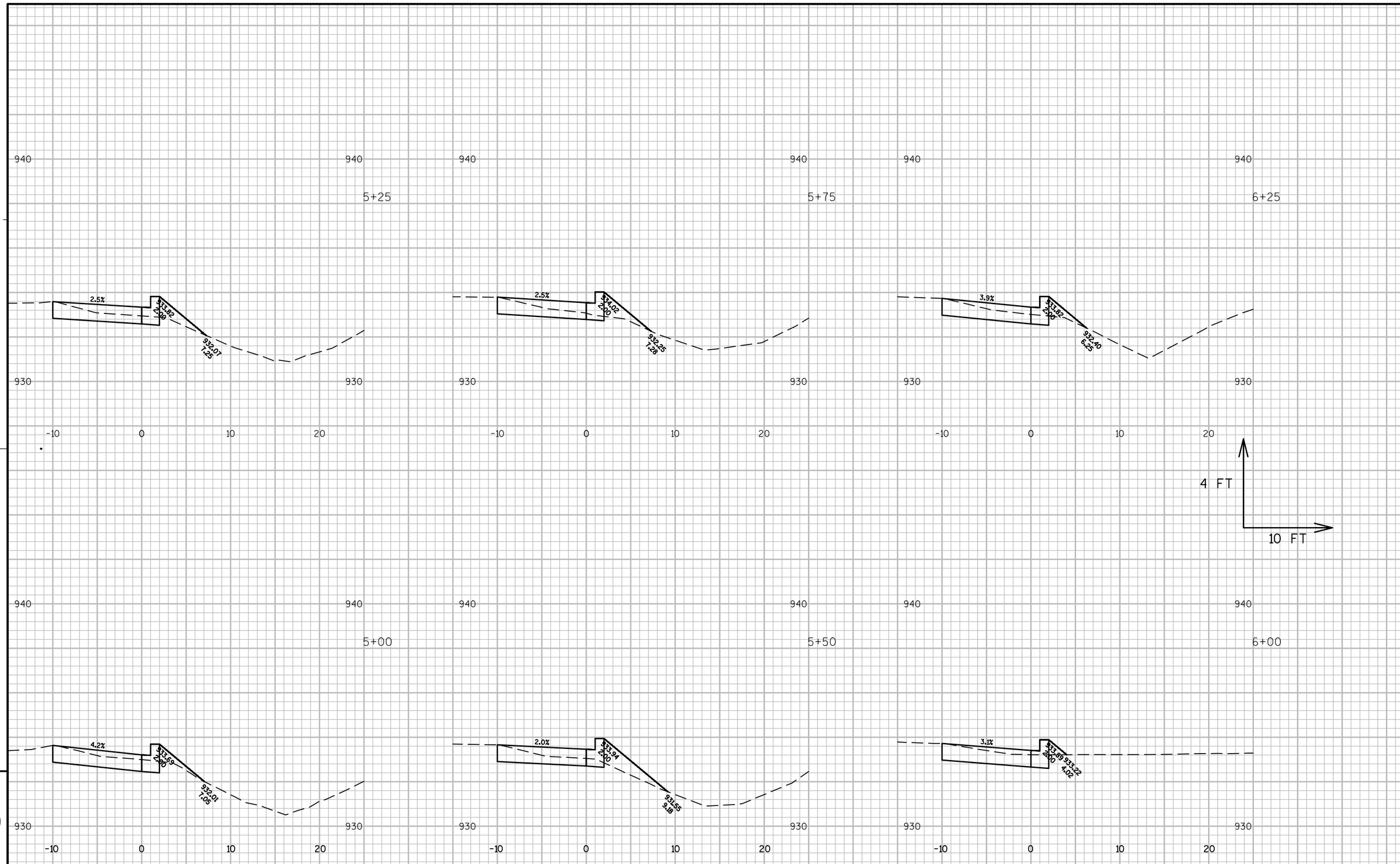

9

9

PROJECT NO:1016-05-78	HWY:REST AREAS 9 & 10	COUNTY:JUNEAU	CROSS SECTIONS:REST AREA 10	SHEET 107	E

FILE NAME : W:\03 PAVTROAD\DOTRJS\RA9_10_26\RA 9_10\CAD\SHEETSPLAN\090213_XS.DWG PLOT DATE : 1/4/2013 9:28 AM PLOT BY : SCHMALE, RICHARD J PLOT NAME : ---------- PLOT SCALE : 1 IN:10 FT

WISDOT/CADDS SHEET 49

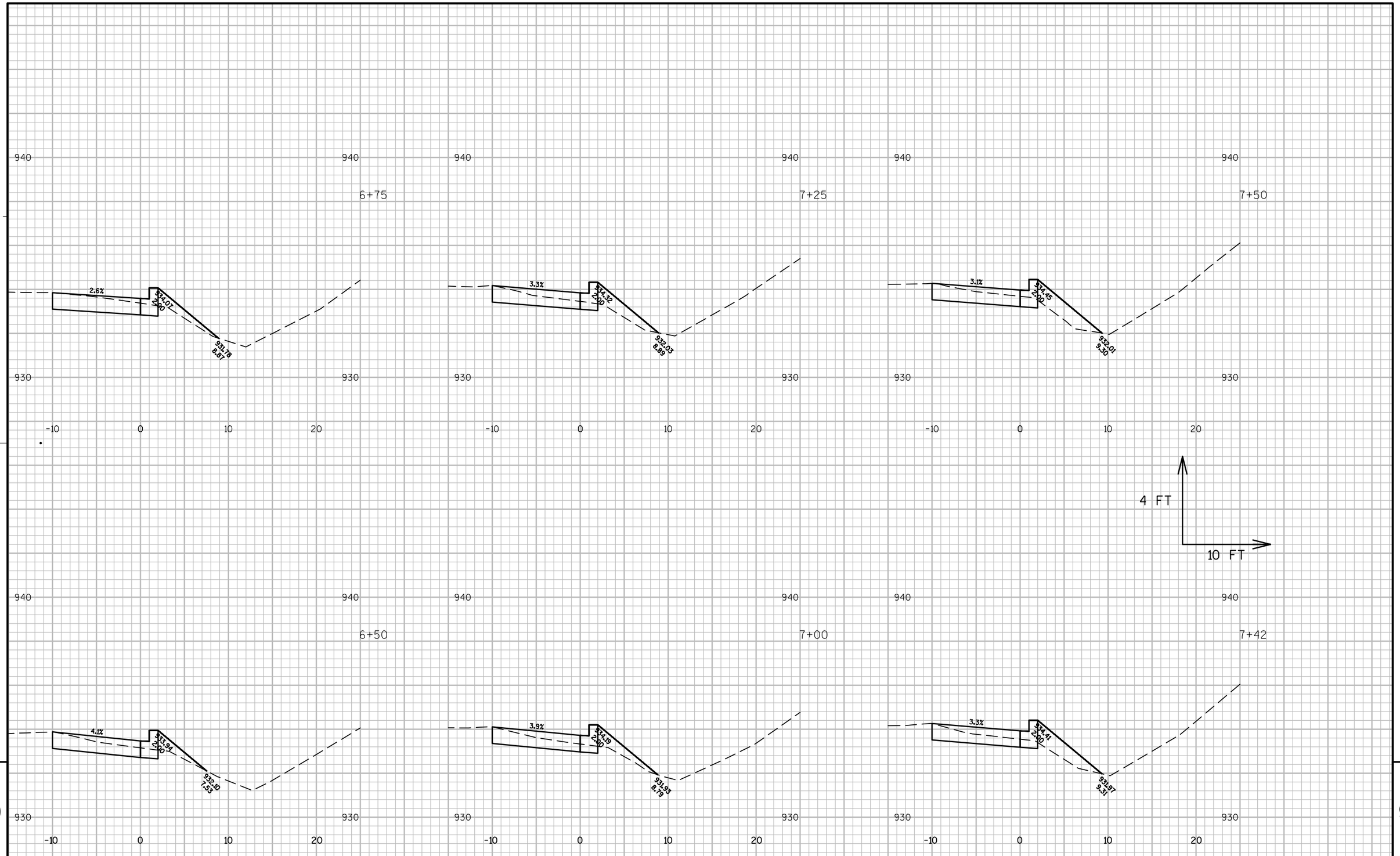

PROJECT NO:1016-05-78	HWY:REST AREAS 9 & 10	COUNTY:JUNEAU	CROSS SECTIONS:REST AREA 10	SHEET 108	E

FILE NAME : W:\03 PAVTROAD\DOTRJS\RA9_10_26\RA 9_10\CAD\SHEETSPLAN\090214_XS.DWG PLOT DATE : 1/4/2013 9:29 AM PLOT BY : SCHMALE, RICHARD J PLOT NAME : ---------- PLOT SCALE : 1 IN:10 FT

WISDOT/CADDS SHEET 49

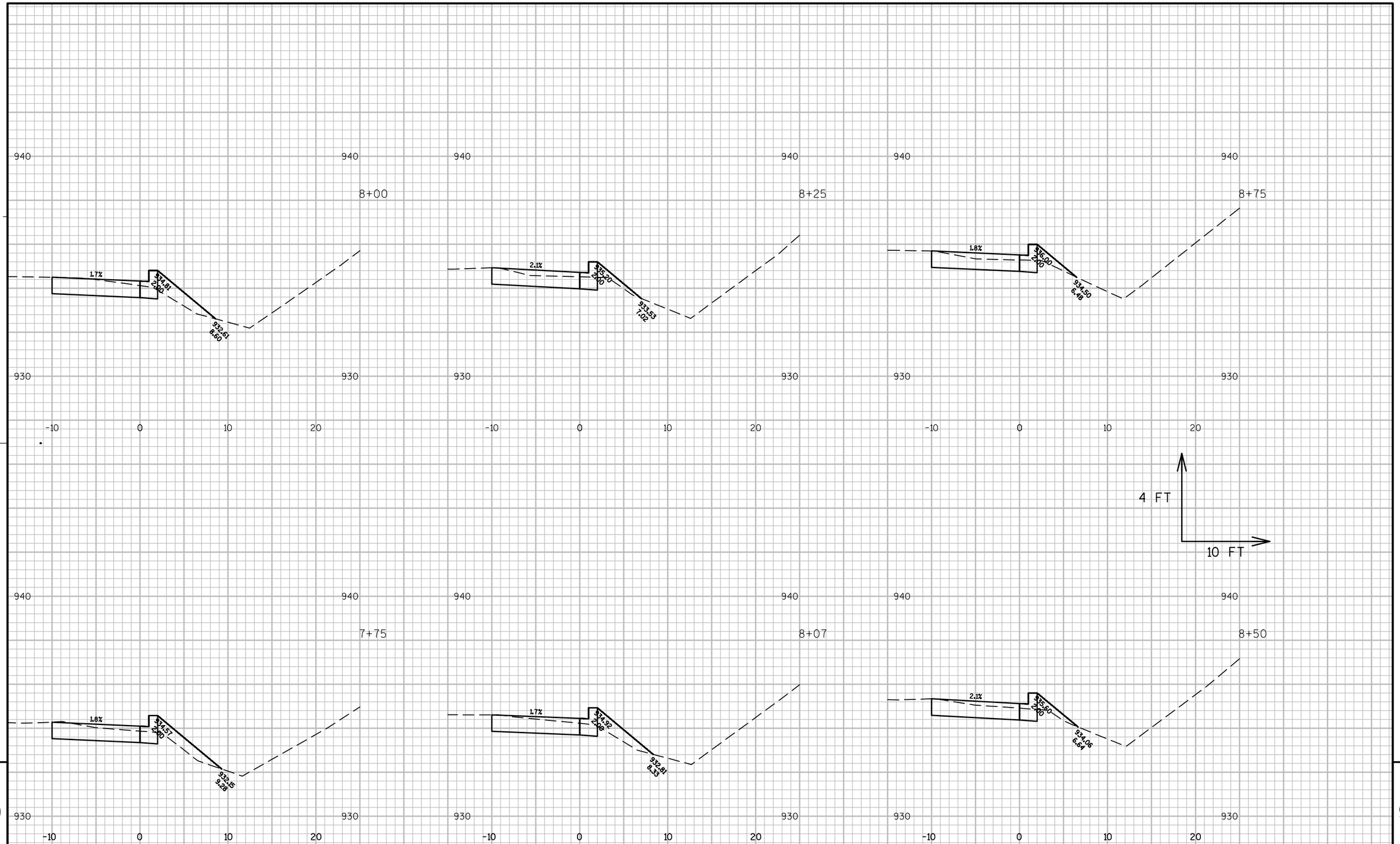

9

9

PROJECT NO:1016-05-78	HWY:REST AREAS 9 & 10	COUNTY:JUNEAU	CROSS SECTIONS:REST AREA 10	SHEET	E

FILE NAME : W:\03 PAVTROAD\DOTRJS\RA9_10_26\RA 9_10\CAD\SHEETSPLAN\090215_XS.DWG PLOT DATE : 1/4/2013 9:29 AM PLOT BY : SCHMALE, RICHARD J PLOT NAME : ---------- PLOT SCALE : 1 IN:10 FT

WISDOT/CADDS SHEET 49

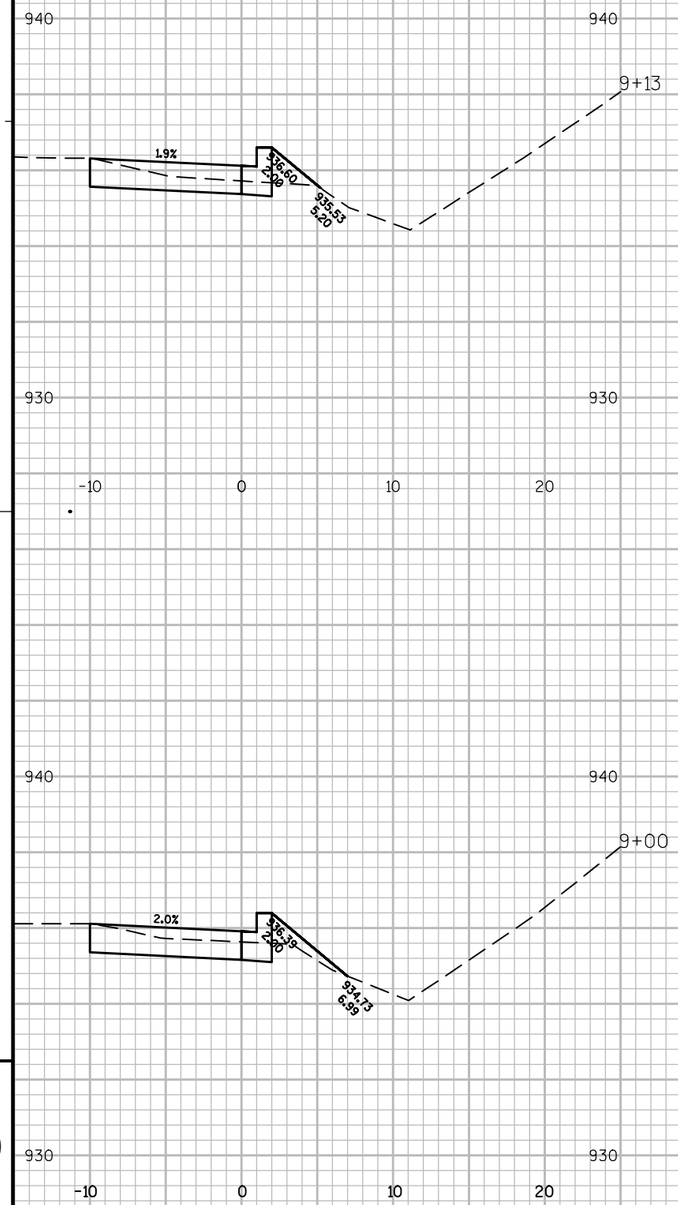

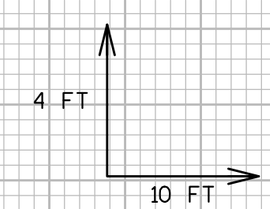

9

9

PROJECT NO:1016-05-78	HWY:REST AREAS 9 & 10	COUNTY:JUNEAU	CROSS SECTIONS:REST AREA 10	SHEET 110	E

FILE NAME : W:\03 PAVTROAD\DOTRJS\RA9_10_26\RA 9_10\CAD\SHEETSPLAN\090216_XS.DWG PLOT DATE : 1/4/2013 9:29 AM PLOT BY : SCHMALE, RICHARD J PLOT NAME : ---------- PLOT SCALE : 1 IN:10 FT

WISDOT/CADDS SHEET 49

Notes

Wisconsin Department of Transportation

Dedicated people creating transportation solutions through innovation and exceptional service.

http://www.dot.wisconsin.gov