SWL

APR 13

PROJECT ID: 5648-00-72
WITH:

COUNTY: LAFAYETTE

ORDER OF SHEETS

Section No.	1	Title
Section No.	2	Typical Sections and Details (Includes Erosion Control)
Section No.	3	Estimate of Quantities
Section No.	3	Miscellaneous Quantities
Section No.	4	Right of Way Plat
Section No.	5	Plan and Profile
Section No.	6	Standard Detail Drawings
Section No.	7	Sign Plates
Section No.	8	Structure Plans
Section No.	9	Computer Earthwork Data
Section No.	9	Cross Sections

TOTAL SHEETS = 182

STATE PROJECT	FEDERAL PROJECT	
	PROJECT	CONTRACT
5648-00-72	WISC 2013208	1

STATE OF WISCONSIN
DEPARTMENT OF TRANSPORTATION

PLAN OF PROPOSED IMPROVEMENT

CTH F-IOWA COUNTY LINE

CANNON ROAD TO CTH S

CTH D

LAFAYETTE COUNTY

STATE PROJECT NUMBER
5648-00-72

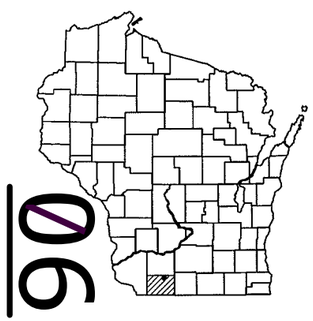

N

BEGIN PROJECT
STA. 107+50
Y = 210,430.55
X = 501,192.56

END PROJECT
STA. 163+05

STRUCTURE
B-33-123

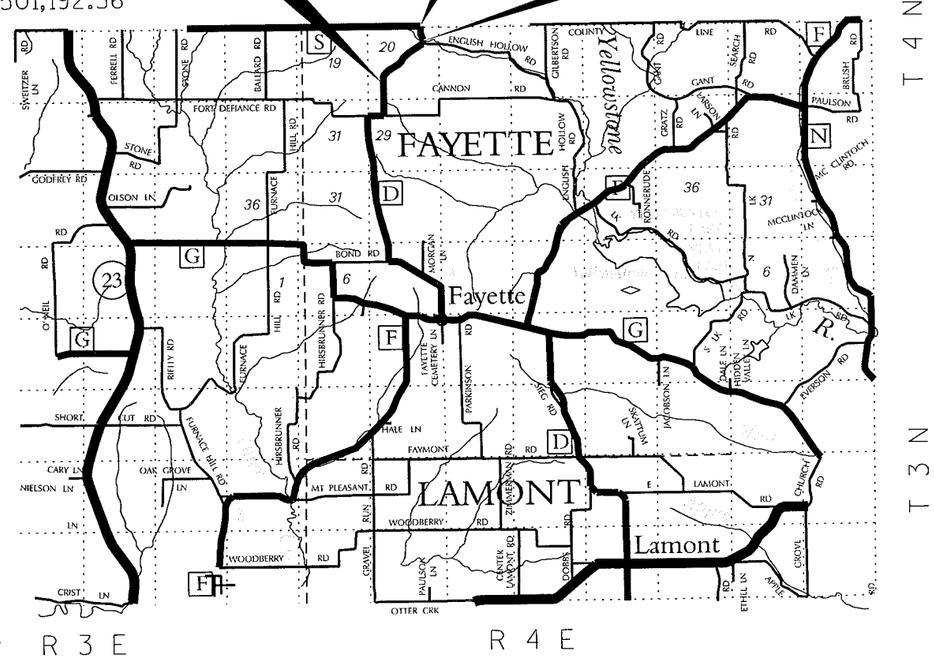

LAYOUT
SCALE 0 — 1 MI.

TOTAL NET LENGTH OF CENTERLINE = 1.052 MI.

-"COORDINATES ON THIS PLAN ARE REFERENCED TO THE WISCONSIN COUNTY COORDINATE SYSTEM (WCCS), LAFAYETTE COUNTY."

DESIGN DESIGNATION

A.A.D.T. 2013	=	115
A.A.D.T. 2033	=	185
D.H.V.	=	30
D.D.	=	60/40
T.	=	5.1%
DESIGN SPEED	=	45 MPH
ESALS	=	14,600

CONVENTIONAL SYMBOLS

PLAN
- CORPORATE LIMITS
- PROPERTY LINE
- LOT LINE
- LIMITED HIGHWAY EASEMENT
- EXISTING RIGHT OF WAY
- PROPOSED OR NEW R/W LINE
- SLOPE INTERCEPT
- REFERENCE LINE
- EXISTING CULVERT
- PROPOSED CULVERT (Box or Pipe)
- COMBUSTIBLE FLUIDS — CAUTION
- MARSH AREA
- WOODED OR SHRUB AREA

PROFILE
- GRADE LINE
- ORIGINAL GROUND
- MARSH OR ROCK PROFILE (To be noted as such) — ROCK
- SPECIAL DITCH — LABEL
- GRADE ELEVATION — 95.36
- CULVERT (Profile View)

UTILITIES
- ELECTRIC — E
- FIBER OPTIC — FO
- GAS — G
- SANITARY SEWER — SAN
- STORM SEWER — SS
- TELEPHONE — T
- WATER — W
- UTILITY PEDESTAL
- POWER POLE
- TELEPHONE POLE

ACCEPTED FOR
COUNTY of LAFAYETTE

8-9-2012 Thomas R. Jean
(Date) (HIGHWAY COMMISSIONER)

ORIGINAL PLANS PREPARED BY

MSA
PROFESSIONAL SERVICES
TRANSPORTATION • MUNICIPAL • REMEDIATION
DEVELOPMENT • ENVIRONMENTAL

2901 International Lane, Suite 300 Madison, WI 53704-3133
608-242-7779 1-800-449-0839 FAX 608-242-5664

WISCONSIN
MICHAEL J. STATZ
E-31249
MADISON
WI
PROFESSIONAL ENGINEER

7-9-12 Michael J. Statz
(Date) (Professional Engineer)

STATE OF WISCONSIN
DEPARTMENT OF TRANSPORTATION

PREPARED BY

Surveyor	MSA PROFESSIONAL SERVICES
Designer	MSA PROFESSIONAL SERVICES
Management Consultant	KJOHNSON ENGINEERS, INC.
C.O. Examiner	

APPROVED FOR DEPARTMENT
DATE: 8/15/12 Jeff Mehrdad
(Management Consultant Signature)

E

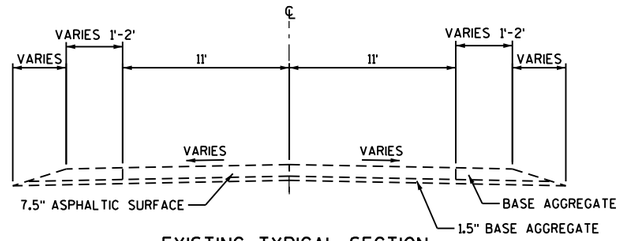

EXISTING TYPICAL SECTION
CTH D

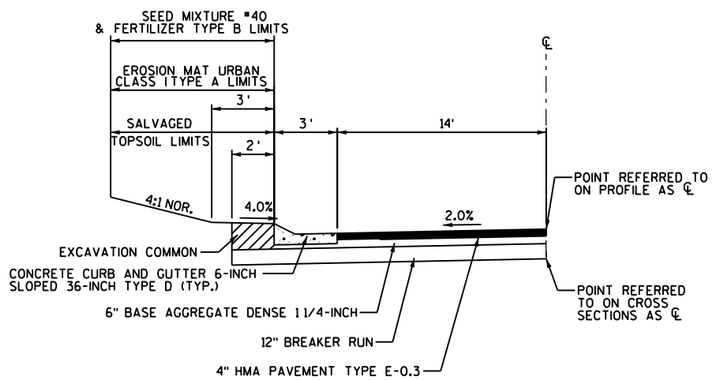

TYPICAL SECTION
CTH D
(STA. 119+80 - STA. 127+30)

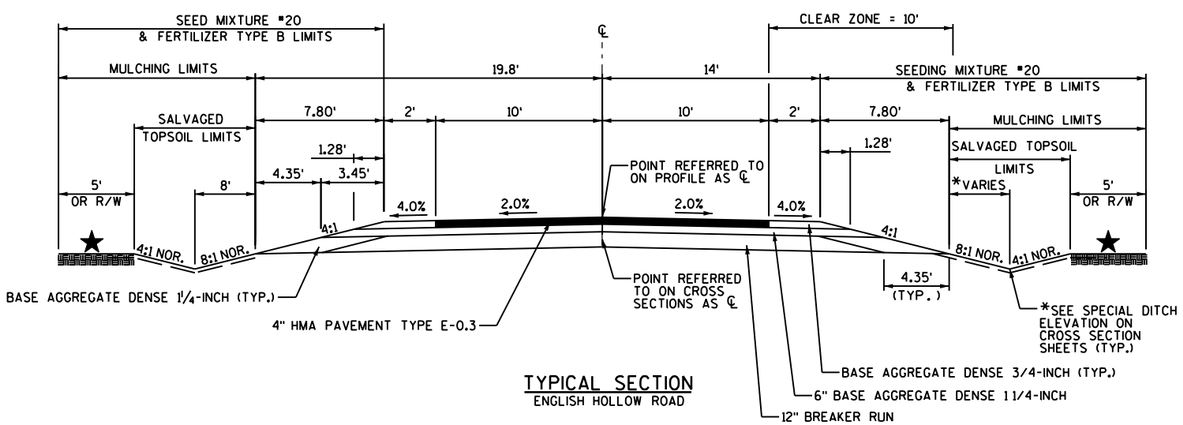

TYPICAL SECTION
ENGLISH HOLLOW ROAD

★WETLANDS EXIST FROM STA. 126+00 TO STA. 127+00, RT, STA. 133+00 TO STA. 134+00, RT, STA. 136+00 TO STA. 138+00, RT, AND AT STA. 152+80, LT & RT. THE CONTRACTOR SHALL NOT DISTURB AREAS OUTSIDE THE SLOPE INTERCEPT IN THESE AREAS.

GENERAL NOTES

DISTURBED AREAS WITHIN THE RIGHT-OF-WAY, EXCEPT THE AREAS WITHIN THE FINISHED SHOULDER POINTS SHALL BE FERTILIZED, SEEDED AND MULCHED AS DIRECTED BY THE ENGINEER.

THE LOCATIONS OF EXISTING AND PROPOSED UTILITY INSTALLATIONS AS SHOWN ON THE PLANS ARE APPROXIMATE. THERE MAY BE OTHER UTILITY INSTALLATIONS WITHIN THE AREA THAT ARE NOT SHOWN.

NO TREES OR SHRUBS ARE TO BE REMOVED WITHOUT APPROVAL OF THE ENGINEER.

ELEVATIONS SHOWN ON THIS PLAN ARE REFERENCED TO NAVD88 BENCHMARK "WISDOT GEODETIC SURVEY CONTROL STATION" LOCATED 1.5 MILES SOUTHWEST OF THE EXISTING BRIDGE, ELEV. 1083.36.

THE DEPARTMENT OF TRANSPORTATION WILL FURNISH A BENCHMARK MONUMENT TO BE INSTALLED BY THE CONTRACTOR AS DIRECTED BY THE ENGINEER.

THE 4" HMA PAVEMENT TYPE E-0.3 SHALL BE CONSTRUCTED USING A 2 1/4" LOWER LAYER OF 19MM NOMINAL SIZE AGGREGATE AND A 1 3/4" UPPER LAYER OF 12.5MM NOMINAL SIZE AGGREGATE.

SILT FENCE TO BE PLACED AS SHOWN ON THE PLAN OR AS DIRECTED BY THE ENGINEER AND IN PLACE PRIOR TO BRIDGE REMOVAL.

WETLANDS EXIST FROM STA. 126+00 TO STA. 127+00, RT, STA. 133+00 TO STA. 134+00, RT, STA. 136+00 TO STA. 138+00, RT, AND AT STA. 152+80, LT & RT. THE CONTRACTOR SHALL NOT DISTURB AREAS OUTSIDE THE SLOPE INTERCEPT IN THESE AREAS.

PRIOR TO THE PLACEMENT OF STEEL PLATE BEAM GUARD, THE SHOULDERS SHALL BE IN PLACE, SHAPED, AND COMPACTED.

THE CONTRACTOR'S PAVING OPERATIONS SHALL BE CONSISTENT WITH THE PLAN TYPICAL SECTIONS AND CONSTRUCTED TO PREVENT HMA LONGITUDINAL JOINTS FROM BEING LOCATED WITHIN A DRIVING, TURNING, PASSING OR PARKING LANE.

SLOPES STEEPER THAN 3:1 REQUIRE EROSION MAT.

UTILITIES

TELEPHONE:
CENTURYLINK
ATTN: STEVE NELSON
135 N. BONSON STREET
PLATTEVILLE, WI 53818
PHONE: (608) 342-4369
EMAIL: STEVE.NELSON@CENTURYLINK.COM

ELECTRIC:
ALLIANT ENERGY
ATTN: GREG EWERS
490 SHAKE RAG ROAD
MINERAL POINT, WI 53565
PHONE: (608) 458-4209
EMAIL: GREGEWERS@ALLIANTENERGY.COM

**-DENOTES UTILITIES THAT ARE NOT DIGGERS HOTLINE MEMBERS

DNR LIAISON

DEPARTMENT OF NATURAL RESOURCES
ATTN.: AMANDA CUSHMAN
ENVIRONMENTAL REVIEW AND ANALYSIS SPECIALIST
3911 FISH HATCHERY ROAD
FITCHBURG, WI 53711-5397
PHONE: (608) 275-3485
EMAIL: AMANDA.CUSHMAN@WISCONSIN.GOV

DESIGN CONTACT

MSA PROFESSIONAL SERVICES, INC.
ATTN: MICHAEL J. STATZ, P.E.
2901 INTERNATIONAL LANE, SUITE 300
MADISON, WI 53704-3133
PHONE: (608) 242-7779
EMAIL: MSTATZ@MSA-PS.COM

LAFAYETTE COUNTY
ATTN: THOMAS R. JEAN, COMMISSIONER
P.O. BOX 100
DARLINGTON, WI 53530
PHONE: (608) 776-4919
EMAIL: TOM.JEAN@LAFAYETTECOUNTYWI.ORG

DIGGERS HOTLINE
Toll Free (800) 242-8511
Hearing Impaired TDD (800) 542-2289
www.DiggersHotline.com

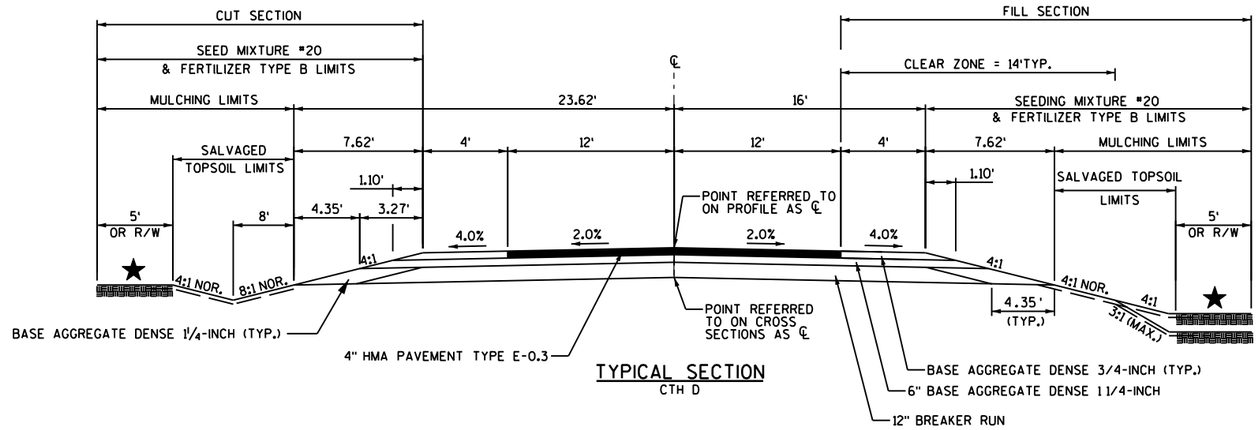

TYPICAL SECTION
CTH D

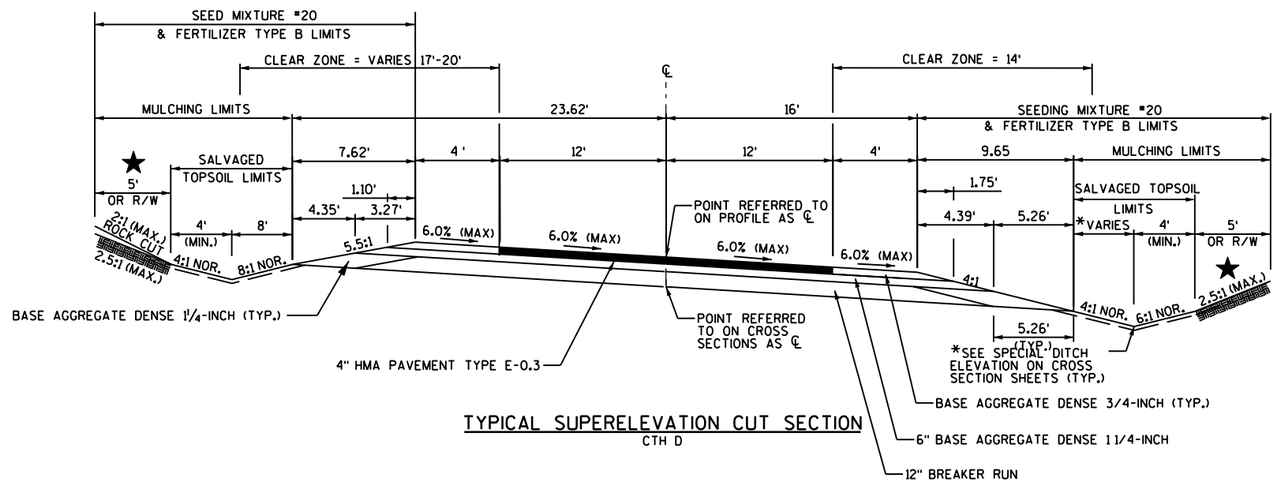

TYPICAL SUPERELEVATION CUT SECTION
CTH D

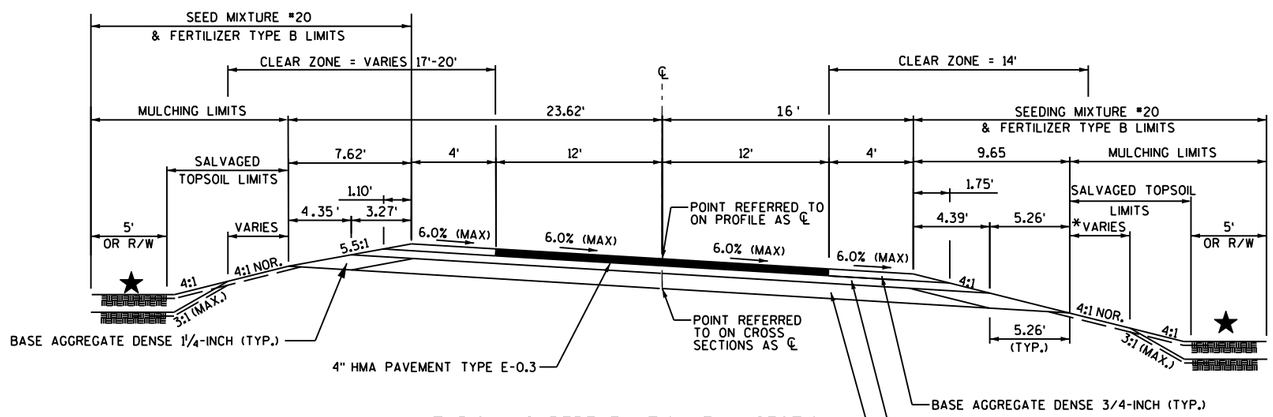

TYPICAL SUPERELEVATION FILL SECTION
CTH D

★ WETLANDS EXIST FROM STA. 126+00 TO STA. 127+00, RT, STA. 133+00 TO STA. 134+00, RT, STA. 136+00 TO STA. 138+00, RT, AND AT STA. 152+80, LT & RT. THE CONTRACTOR SHALL NOT DISTURB AREAS OUTSIDE THE SLOPE INTERCEPT IN THESE AREAS.

PROJECT NO:5648-00-72	HWY:CTH D	COUNTY:LAFAYETTE	TYPICAL SECTIONS	SHEET 3	E

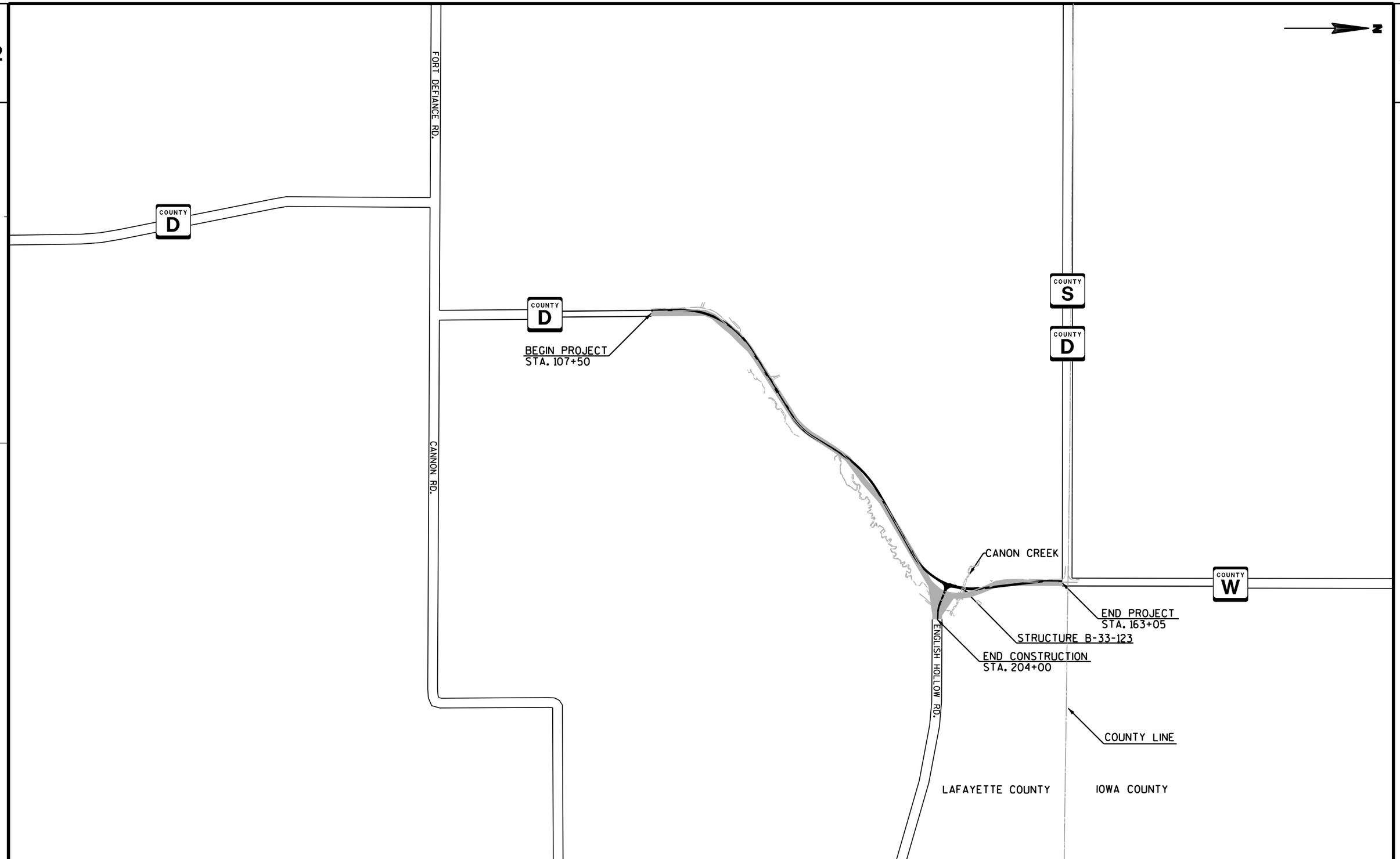

PROJECT NO:5648-00-72	HWY:CTH D	COUNTY:LAFAYETTE	PROJECT OVERVIEW	SHEET 4	E

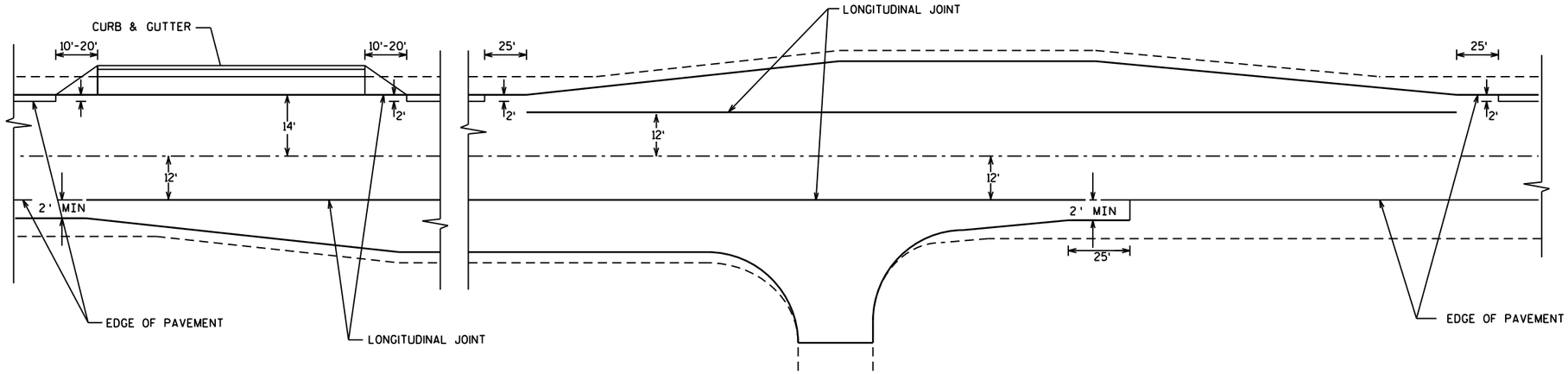

HMA LONGITUDINAL JOINT DETAIL

TO BE USED AT ALL INTERSECTIONS, BYPASS AND PASSING LANES, AND RURAL CURB SECTIONS

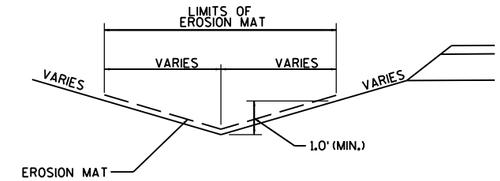

EROSION MAT DITCH DETAIL

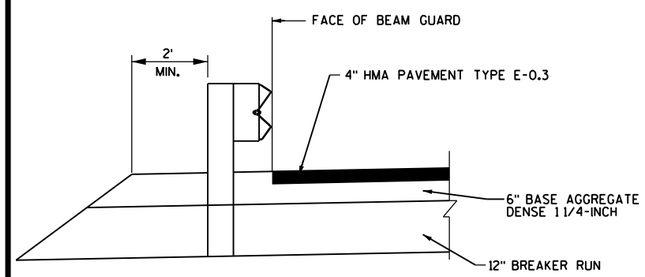

SECTION A-A THRU BEAM GUARD

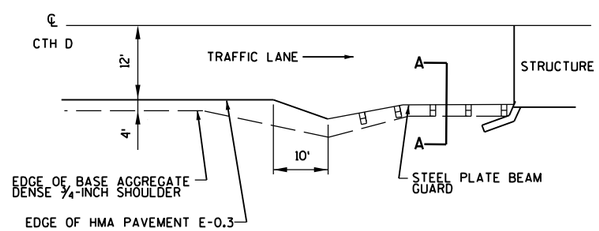

PLAN - ASPHALTIC PAVEMENT SHOULDER AT BEAM GUARD

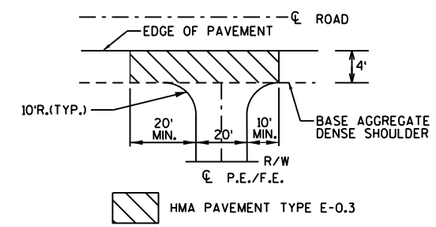

PRIVATE/FIELD ENTRANCE PLAN

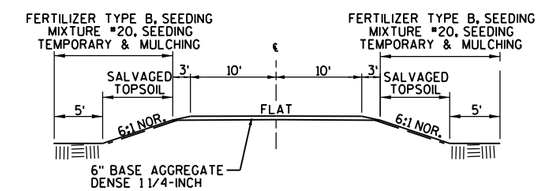

PRIVATE/FIELD ENTRANCE - TYPICAL SECTION

FIELD ENTRANCE DETAILS

RUNOFF COEFFICIENT TABLE

	HYDROLOGIC SOIL GROUP											
	A			B			C			D		
	SLOPE RANGE (PERCENT)			SLOPE RANGE (PERCENT)			SLOPE RANGE (PERCENT)			SLOPE RANGE (PERCENT)		
LAND USE:	0-2	2-6	6 & OVER	0-2	2-6	6 & OVER	0-2	2-6	6 & OVER	0-2	2-6	6 & OVER
ROW CROPS	.08 .22	.16 .30	.22 .38	.12 .26	.20 .34	.27 .44	.15 .30	.24 .37	.33 .50	.19 .34	.28 .41	.38 .56
MEDIAN STRIP-TURF	.19 .24	.20 .26	.24 .30	.19 .25	.22 .28	.26 .33	.20 .26	.23 .30	.30 .37	.20 .27	.25 .32	.30 .40
SIDE SLOPE-TURF			.25 .32			.27 .34			.28 .36			.30 .38
PAVEMENT:												
ASPHALT	.70 - .95											
CONCRETE	.80 - .95											
BRICK	.70 - .80											
DRIVES, WALKS	.75 - .85											
ROOFS	.75 - .95											
GRAVEL ROADS, SHOULDERS	.40 - .60											

TOTAL PROJECT AREA = 17.8 ACRES
TOTAL AREA EXPECTED TO BE DISTURBED BY CONSTRUCTION ACTIVITIES = 15.5 ACRES

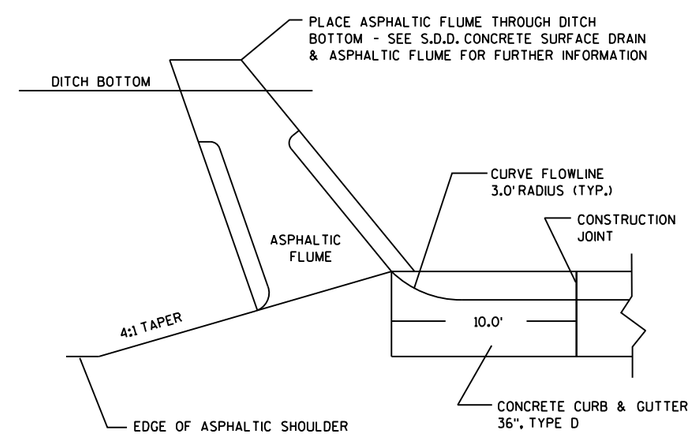

CURB & GUTTER TERMINI

& ASPHALTIC FLUME DETAIL

2

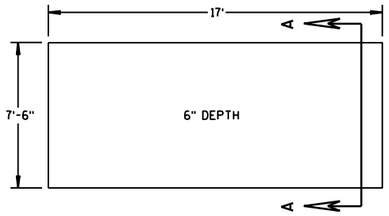

PLAN VIEW
(TYPICAL EXCAVATION DIMENSIONS FOR CATTLEGUARD INSTALLATION)

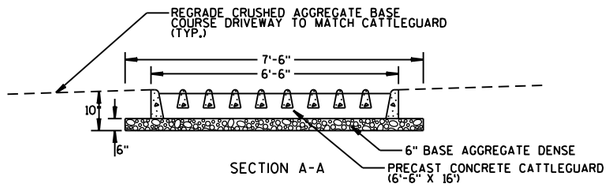

SECTION A-A

PRECAST CONCRETE CATTLEGUARD DETAIL

STA. 200+38, RT.

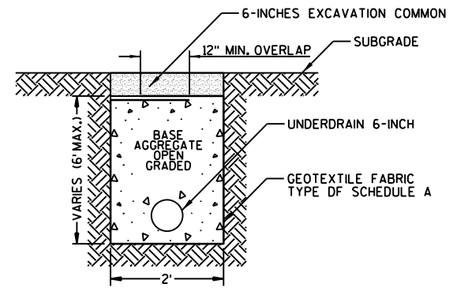

SECTION A-A
(WITH PIPE UNDERDRAIN)

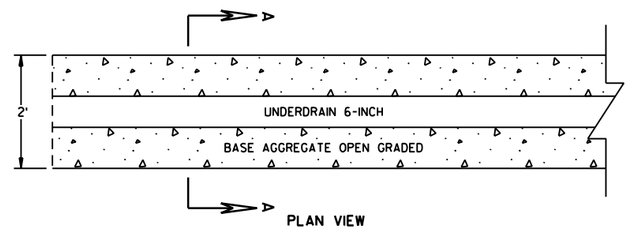

PLAN VIEW

SPRING BOX DETAIL

STA. 136+00 RT

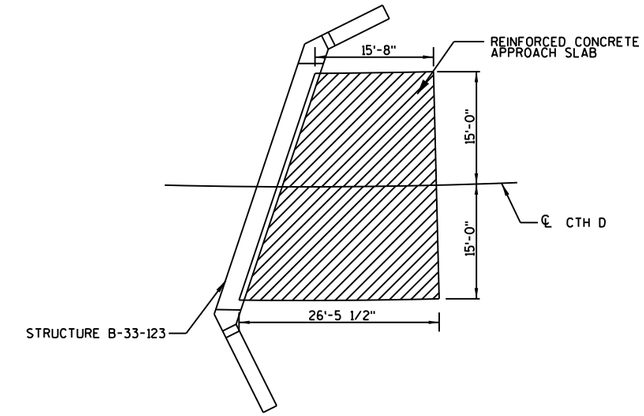

APPROACH SLAB DETAIL

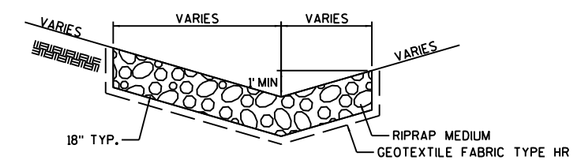

RIPRAP MEDIUM DITCH

STA. 107+00 - STA. 114+00, LT.
STA. 107+00 - STA. 113+00, RT.
STA. 156+90 - STA. 163+00, LT.
STA. 157+85 - STA. 163+00, RT.

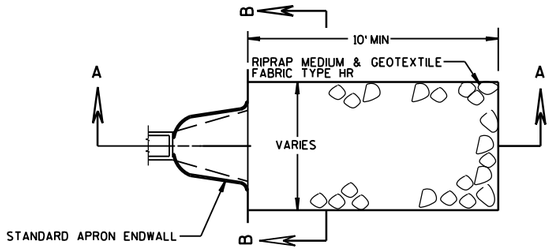

PLAN VIEW

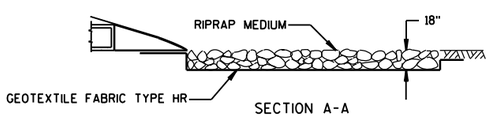

SECTION A-A

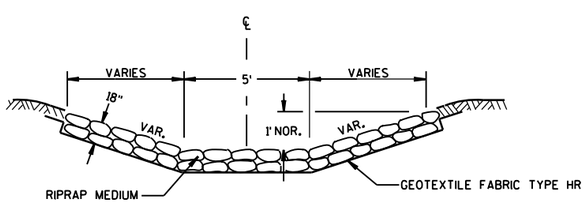

SECTION B-B

RIPRAP MEDIUM AND GEOTEXTILE FABRIC DETAIL AT APRON ENDWALLS

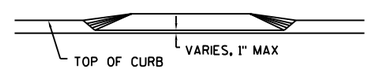

SECTION A-A

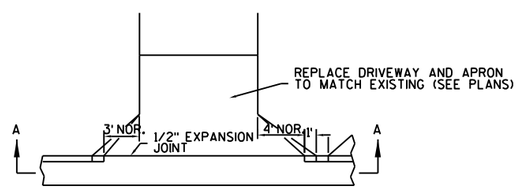

PLAN

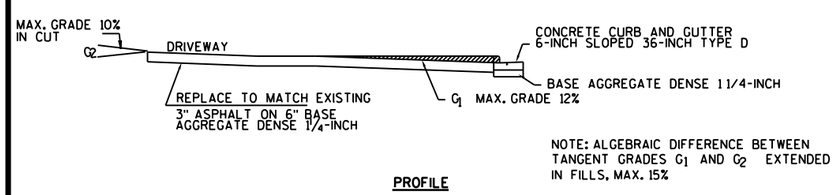

PROFILE

DRIVEWAY DETAIL

STA. 123+00, LT

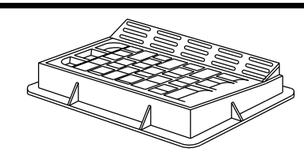

INLET COVER TYPE "HM"

STATION, OFFSETS FOR INLETS ARE TO CENTER OF STRUCTURE

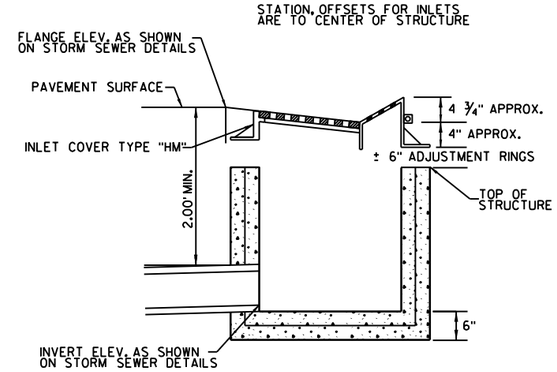

TYPE 3-HM INLET DETAIL

2

PROJECT NO:5648-00-72	HWY:CTH D	COUNTY:LAFAYETTE	CONSTRUCTION DETAILS	SHEET 6	E

2

P.I. = 151+02.86
Y = 213,334.37
X = 504,096.39
Δ. = 67.40
D. = 4.46
T. = 476.01
L. = 632.85
R. = 710.00
P.C. = 146+26.84
P.T. = 154+65.51
S.E. = 6.0% (MAX)

P.I. = 202+58.36
Y = 213,366.90
X = 504,235.55
Δ. = 20.33
D. = 15.29
T. = 67.11
L. = 132.79
R. = 370.00
P.C. = 201+91.24
P.T. = 203+24.04

PT	STATION	OFFSET	ELEV.
1	200+18.12	47.38' LT	984.80
2	200+26.84	32.22' LT	985.18
3	200+41.55	22.75' LT	985.53
4	200+15.35	70.32' RT	988.52
5	200+32.20	32.78' RT	987.46
6	200+69.28	14.92' RT	986.37
7	201+29.59	10.00' LT	983.32
8	201+18.94	10.00' RT	984.37
9	152+02.01	15.00' RT	983.74
10	149+74.98	12.00' RT	991.96

PT	STATION	OFFSET
A	200+53.63	57.72' LT
B	200+75.20	74.63' RT

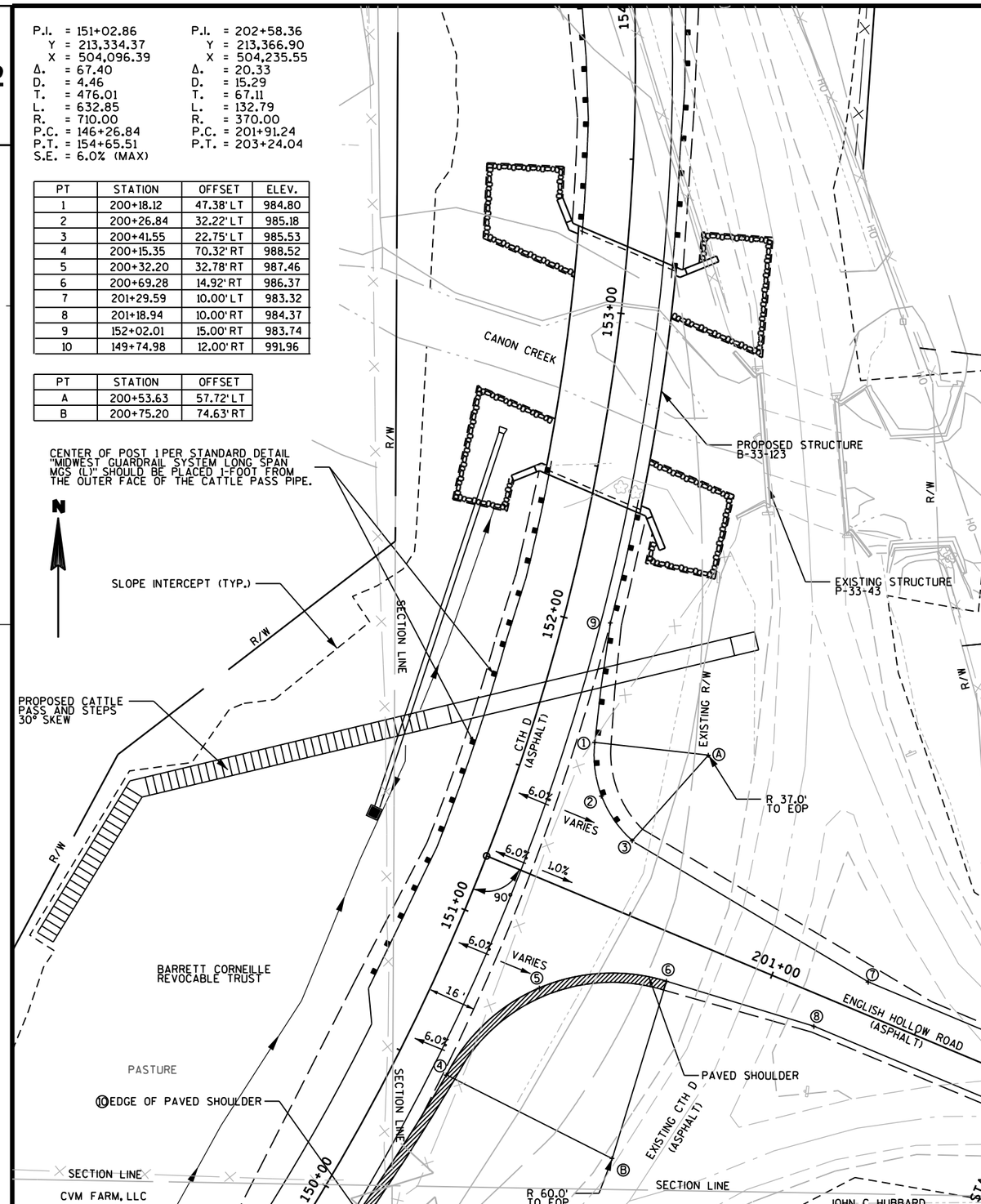

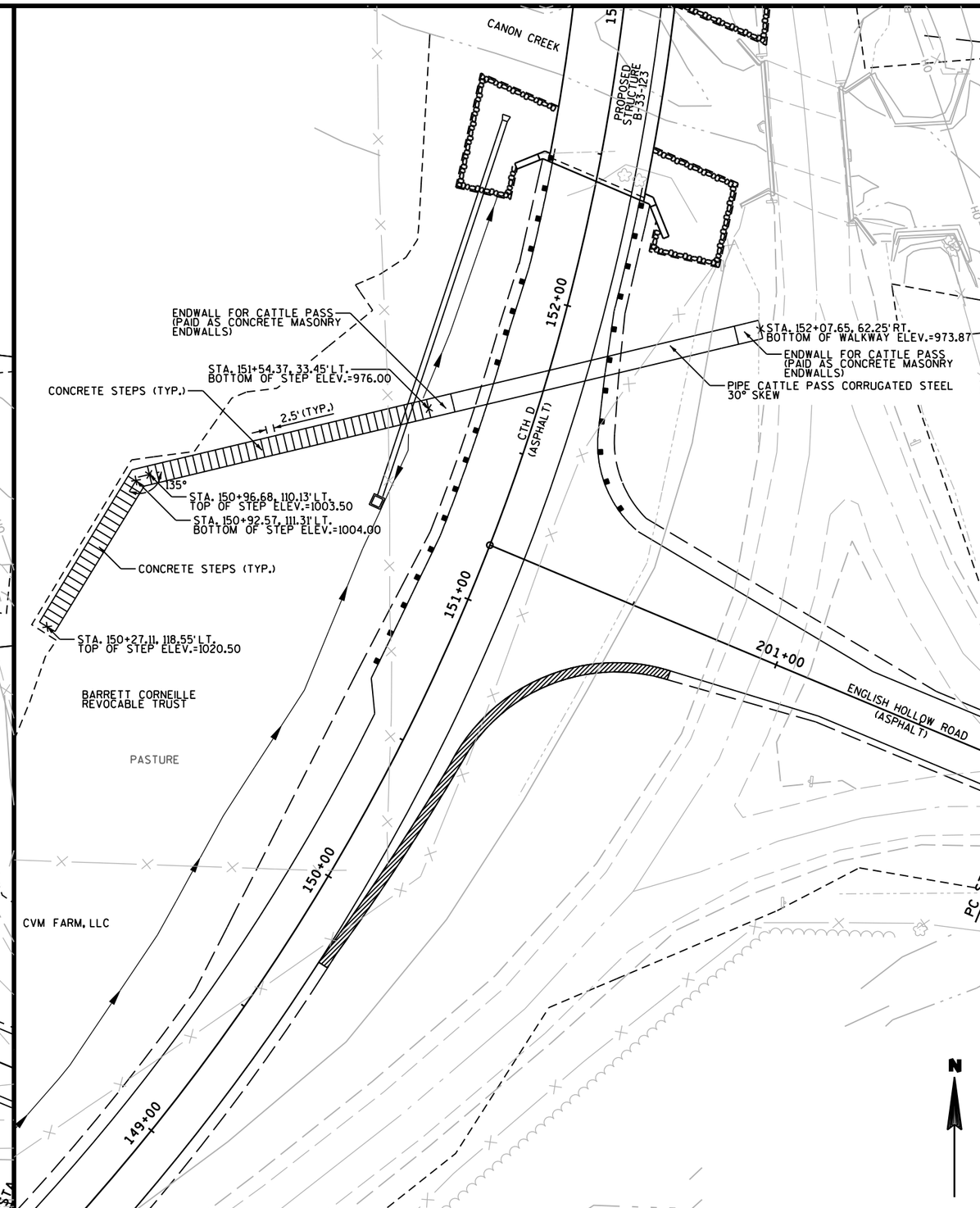

2

PROJECT NO:5648-00-72	HWY:CTH D	COUNTY:LAFAYETTE	INTERSECTION AND CATTLE PASS DETAIL	SHEET 7	E

2

EXISTING 18" CMP CULVERT PIPE TO REMAIN

TLE

CVM FARM, LLC

SLOPE INTERCEPTS (TYP.)

NEW R/W

STA. 116+13.83, 33.95' LT.
INLET MEDIAN 2 GRATE
INLET COVER TYPE MS
SINGLE SLOPE
1.1

CONNECT EXISTING 18" CMP CULVERT PIPE INTO NEW STRUCTURE

EXISTING R/W

CTH D

116+00

117+00

EW.1 STA. 116+13.92, 30.90' RT.
36" CMP APRON ENDWALL REQ'D.

PROPOSED DITCH (TYP.)

EXISTING R/W

STA. 122+75.86, 44.57' LT.
INLET MEDIAN 1 GRATE
INLET COVER TYPE MS
SINGLE SLOPE
2.1

2.2 STA. 123+12.67, 44.57' LT.
INLET MEDIAN 1 GRATE
INLET COVER TYPE MS
SINGLE SLOPE

NEW R/W

SLOPE INTERCEPTS (TYP.)

CVM FARM, LLC

EXISTING R/W

2.3 STA. 123+31.13, 15.50' LT.
INLET 2X3
INLET COVER TYPE HM

CTH D

123+00

EW.2 STA. 123+31.13, 30.25' RT.
24" CMP APRON ENDWALL REQ'D.

EXISTING R/W

2

1054
1052
1050
1048
1046
1044
1042
1040

EXISTING 18" CMP CULVERT PIPE TO REMAIN

EX. I.E. = 1052.51

INLET 1.1
RIM=1052.09

EX. I.E. = 1049.54

CONNECT TO EXISTING 18" CMP PIPE

3 L.F.-18" CMP @ APPROX. 9.37% (MATCH EXISTING PIPE SLOPE)

I.E. = 1049.26 WEST
I.E. = 1047.97 EAST

65 L.F. - 36" CMP @ 0.65%

EW.1

I.E. = 1047.56
I.E. = 1047.52

36" CMP APRON ENDWALL REQ'D.

VERIFIY INVERT ELEVATION PRIOR TO FABRICATION OF THE INLET

1050
1048
1046
1044
1042
1040
1038
1036

INLET 2.1
RIM=1048.37

I.E. = 1045.69

37 L.F. - 12" CMP @ 1.76%

INLET 2.2
RIM=1047.84

SOUTH I.E. = 1045.09
EAST I.E. = 1044.84

34 L.F. - 12" CMP @ 8.70%

INLET 2.3
FLANGE=1044.89

WEST I.E. = 1041.88
EAST I.E. = 1039.88

46 L.F. - 24" CMP @ 1.55%

EW.2

I.E. = 1039.23
I.E. = 1039.13

24" CMP APRON ENDWALL REQ'D.

PROJECT NO:5648-00-72	HWY:CTH D	COUNTY:LAFAYETTE	CONSTRUCTION DETAILS - STORM SEWER	SHEET 8	E

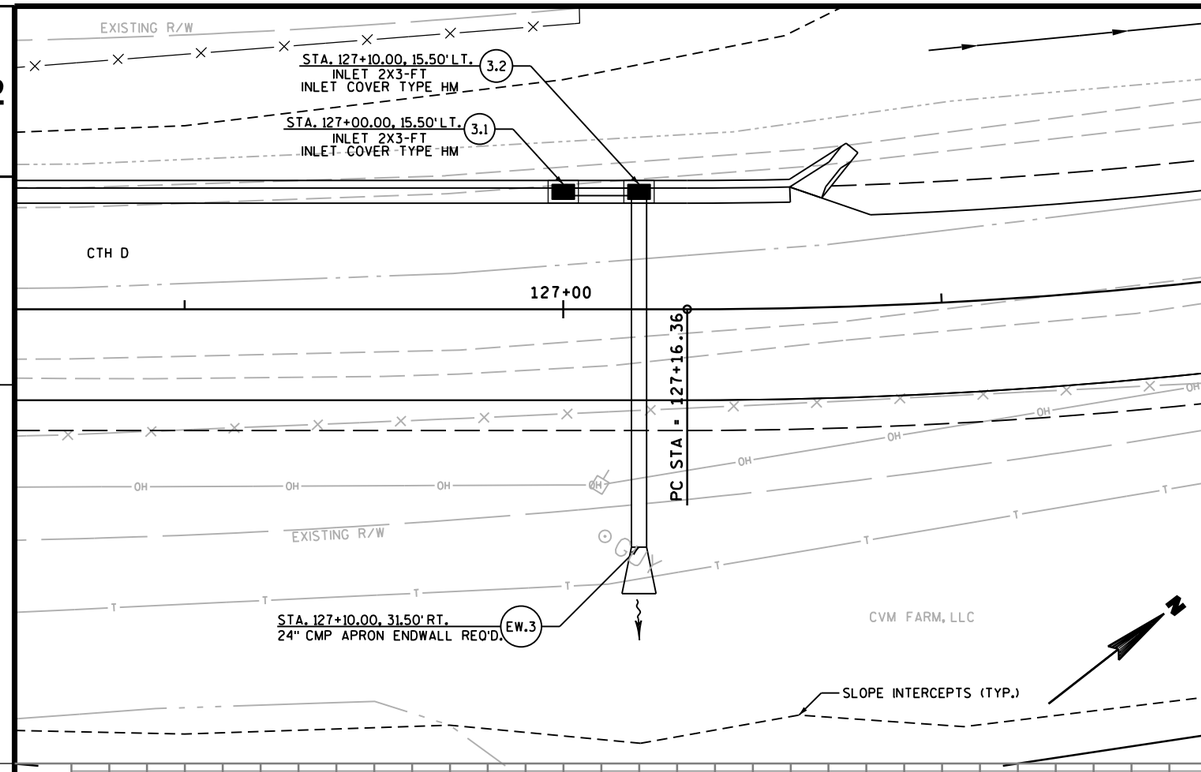

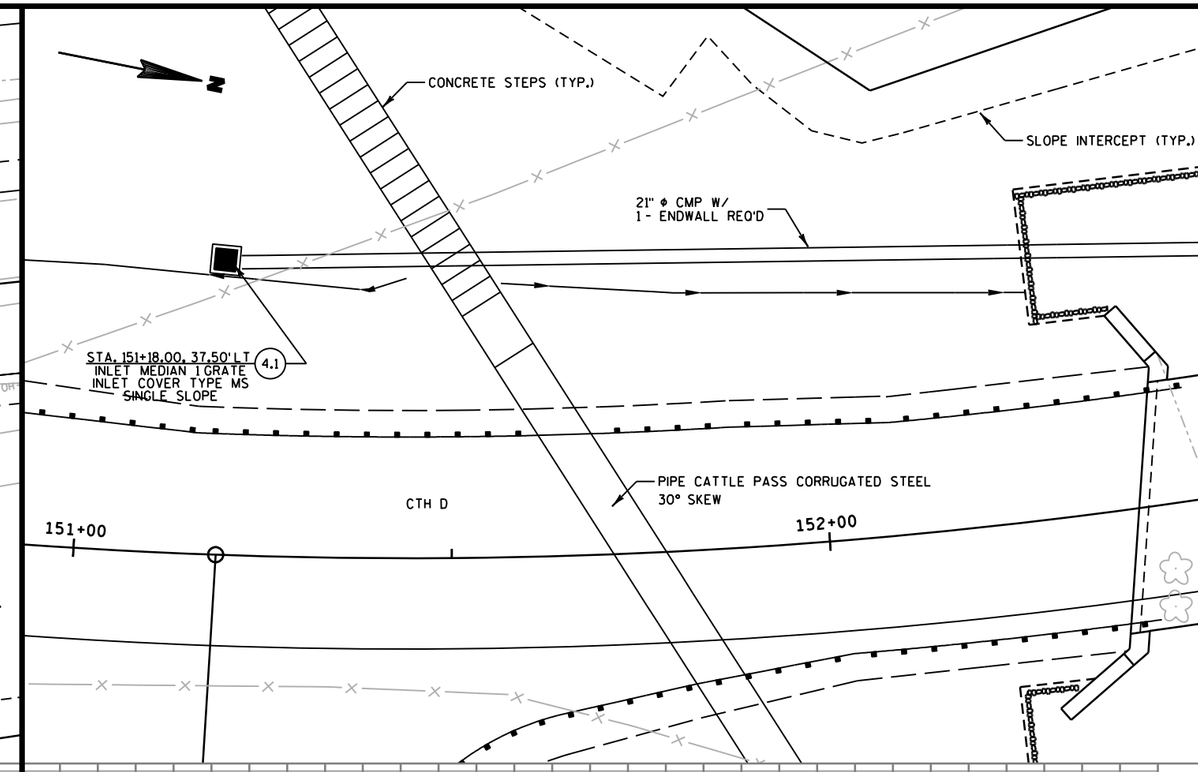

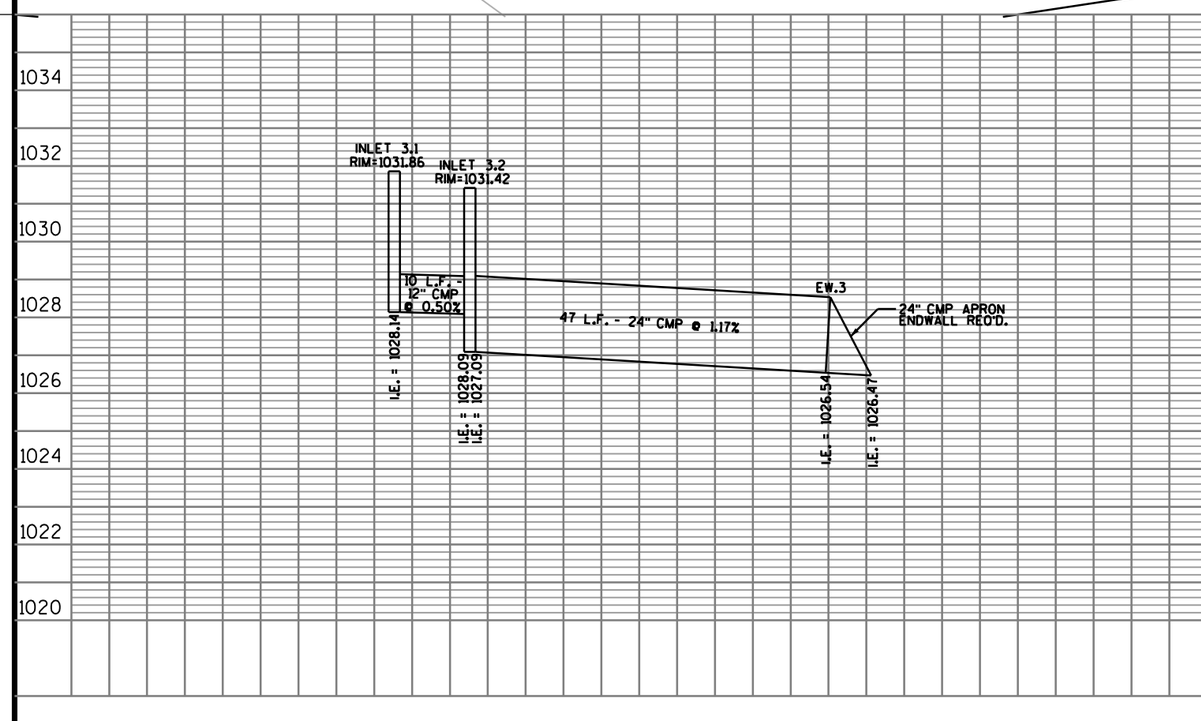

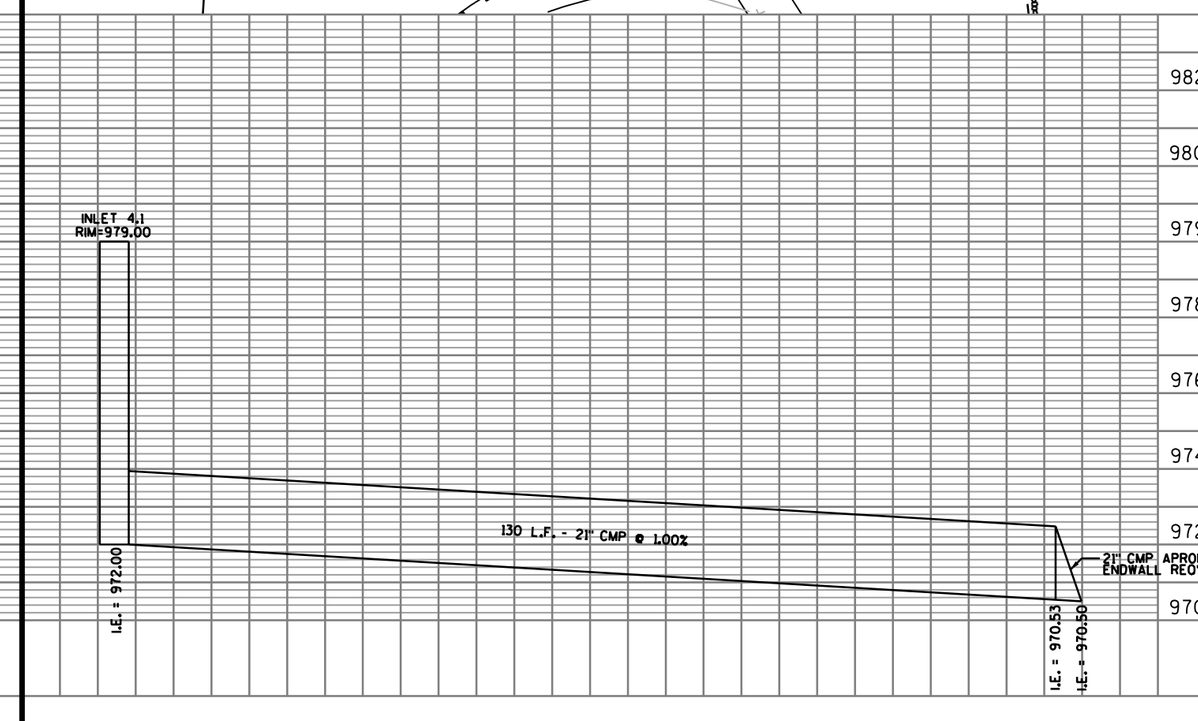

PROJECT NO:5648-00-72	HWY:CTH D	COUNTY:LAFAYETTE	CONSTRUCTION DETAILS - STORM SEWER	SHEET 9	E

2

2

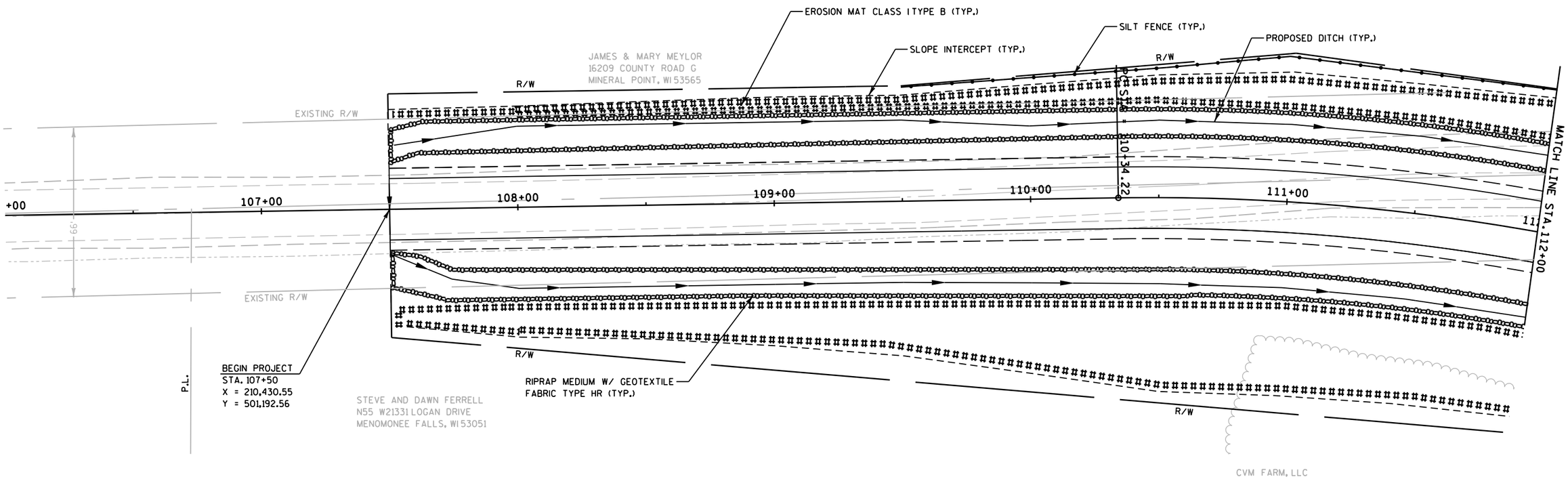

PROJECT NO:5648-00-72	HWY:CTH D	COUNTY:LAFAYETTE	EROSION CONTROL	SHEET 10	E

2

2

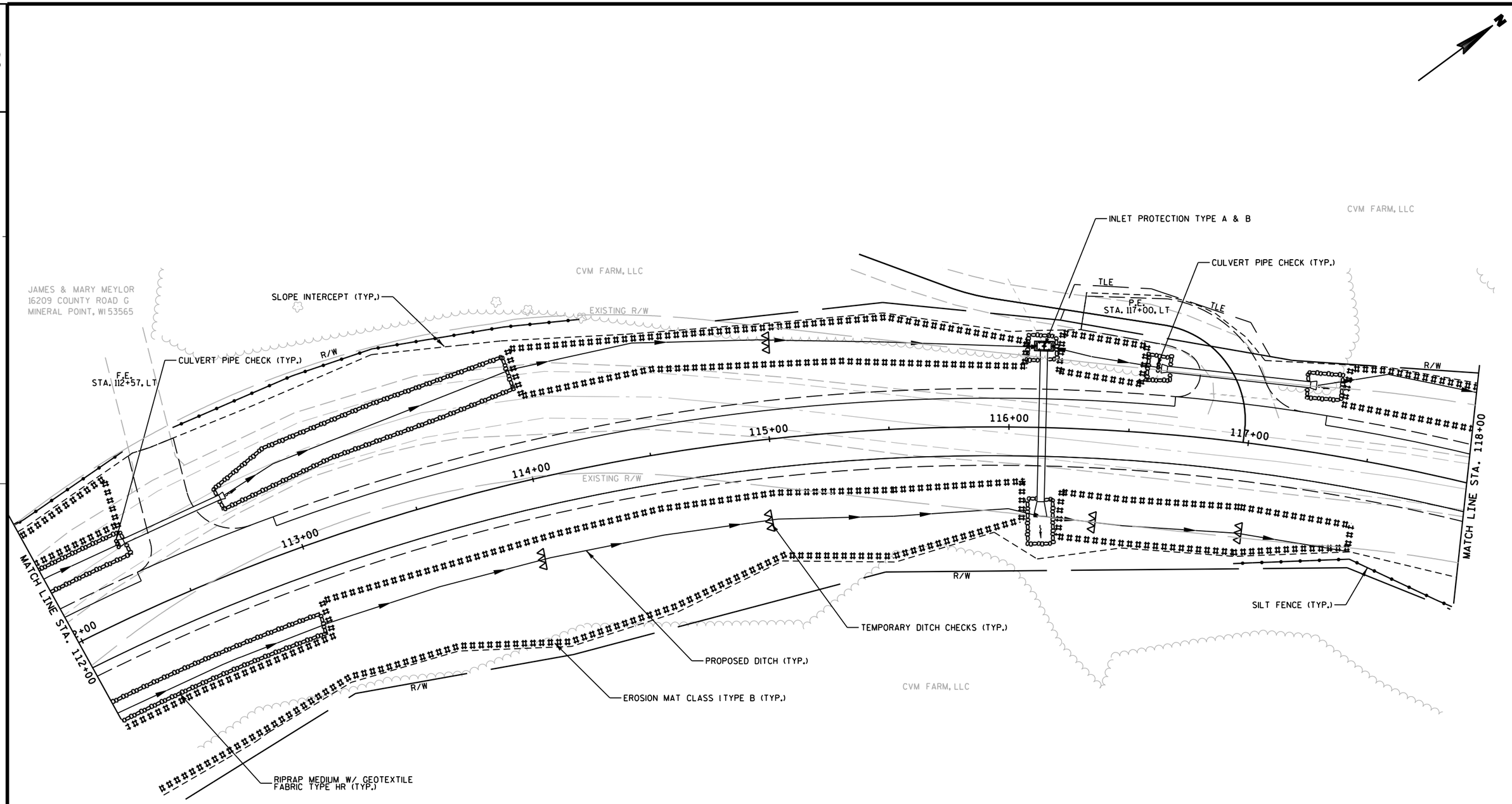

PROJECT NO:5648-00-72	HWY:CTH D	COUNTY:LAFAYETTE	EROSION CONTROL	SHEET 11	E

2

2

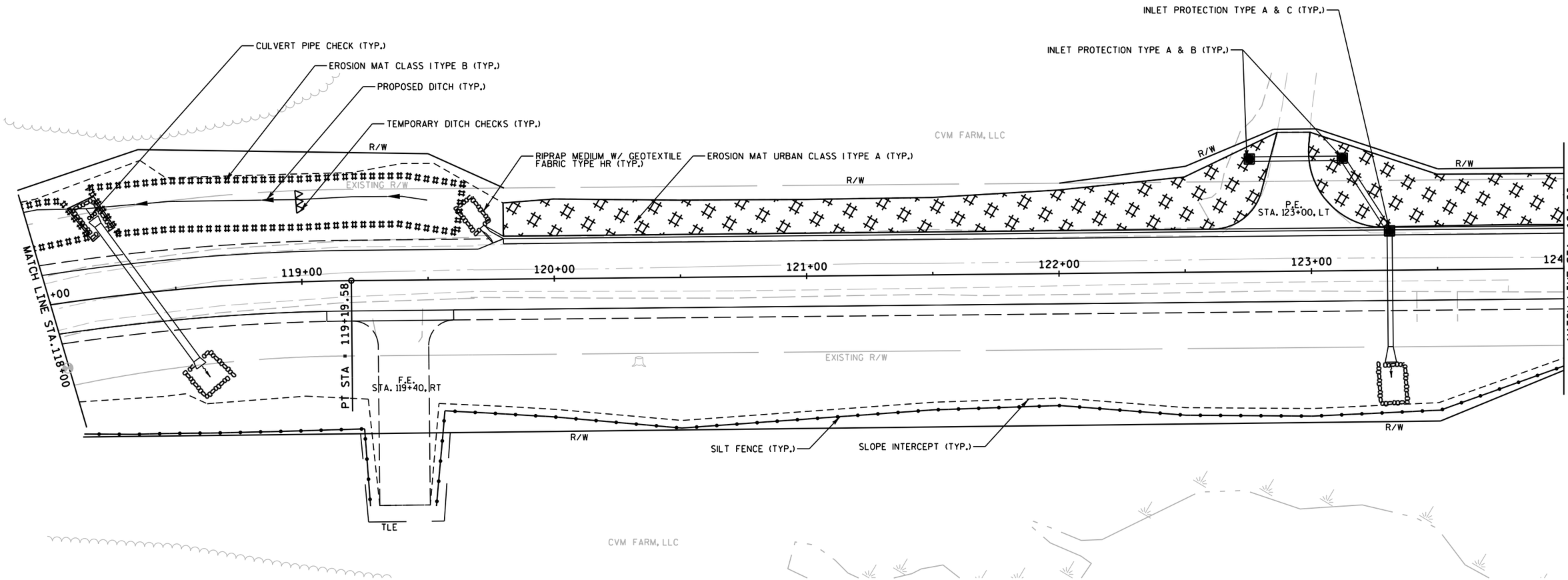

PROJECT NO:5648-00-72	HWY:CTH D	COUNTY:LAFAYETTE	EROSION CONTROL	SHEET 12	E

2

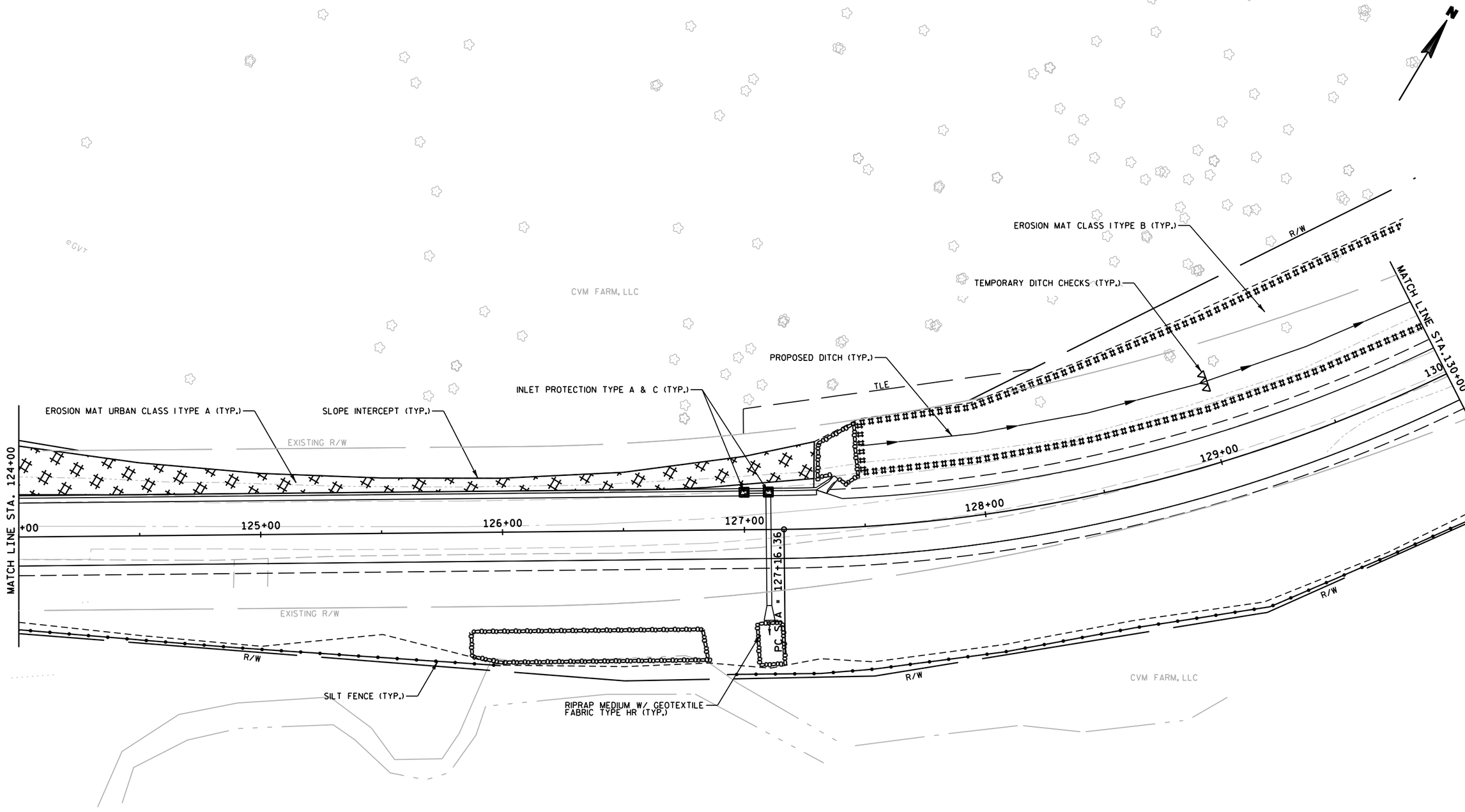

2

PROJECT NO: 5648-00-72	HWY: CTH D	COUNTY: LAFAYETTE	EROSION CONTROL	SHEET 13	E

FILE NAME : $$....designfile....$$ PLOT DATE : $$...plottingdate...$$ PLOT BY : $$...plotuser...$$ PLOT NAME : PLOT SCALE : $$.....plotscale.....$$ WISDOT/CADDS SHEET 42

2

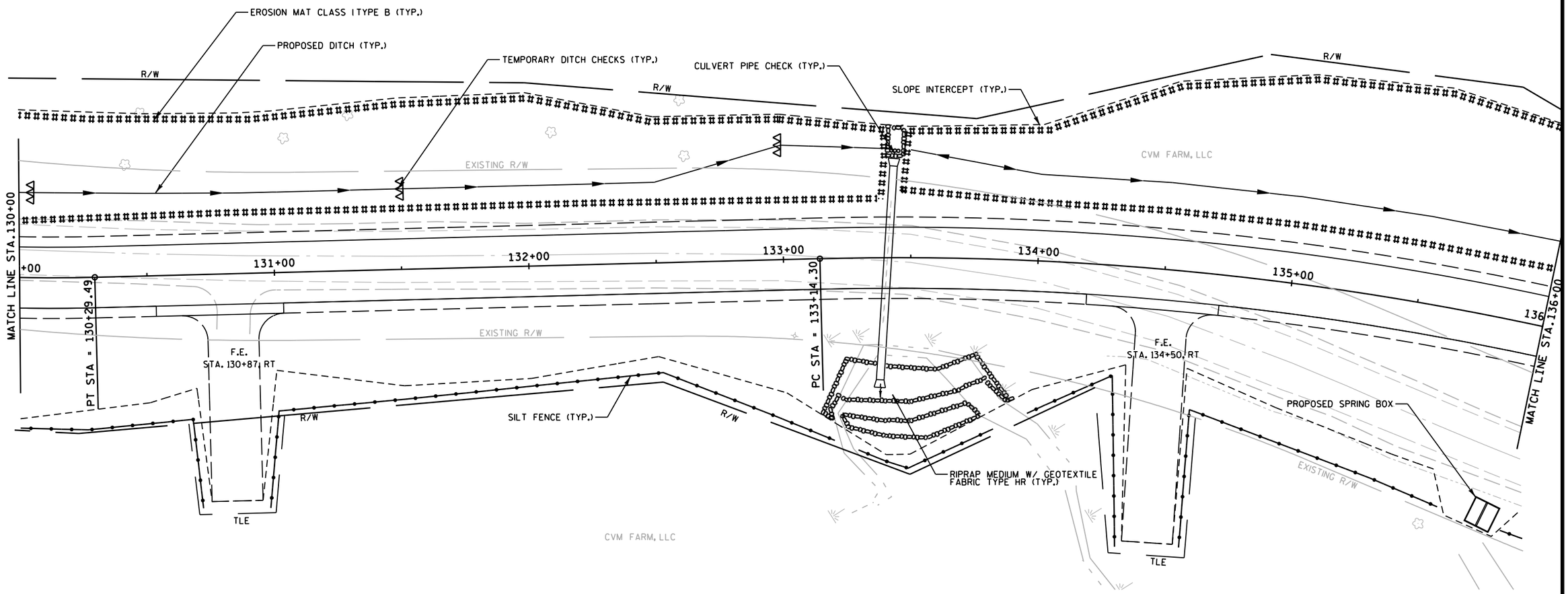

PROJECT NO:5648-00-72	HWY:CTH D	COUNTY:LAFAYETTE	EROSION CONTROL	SHEET 14	E

2

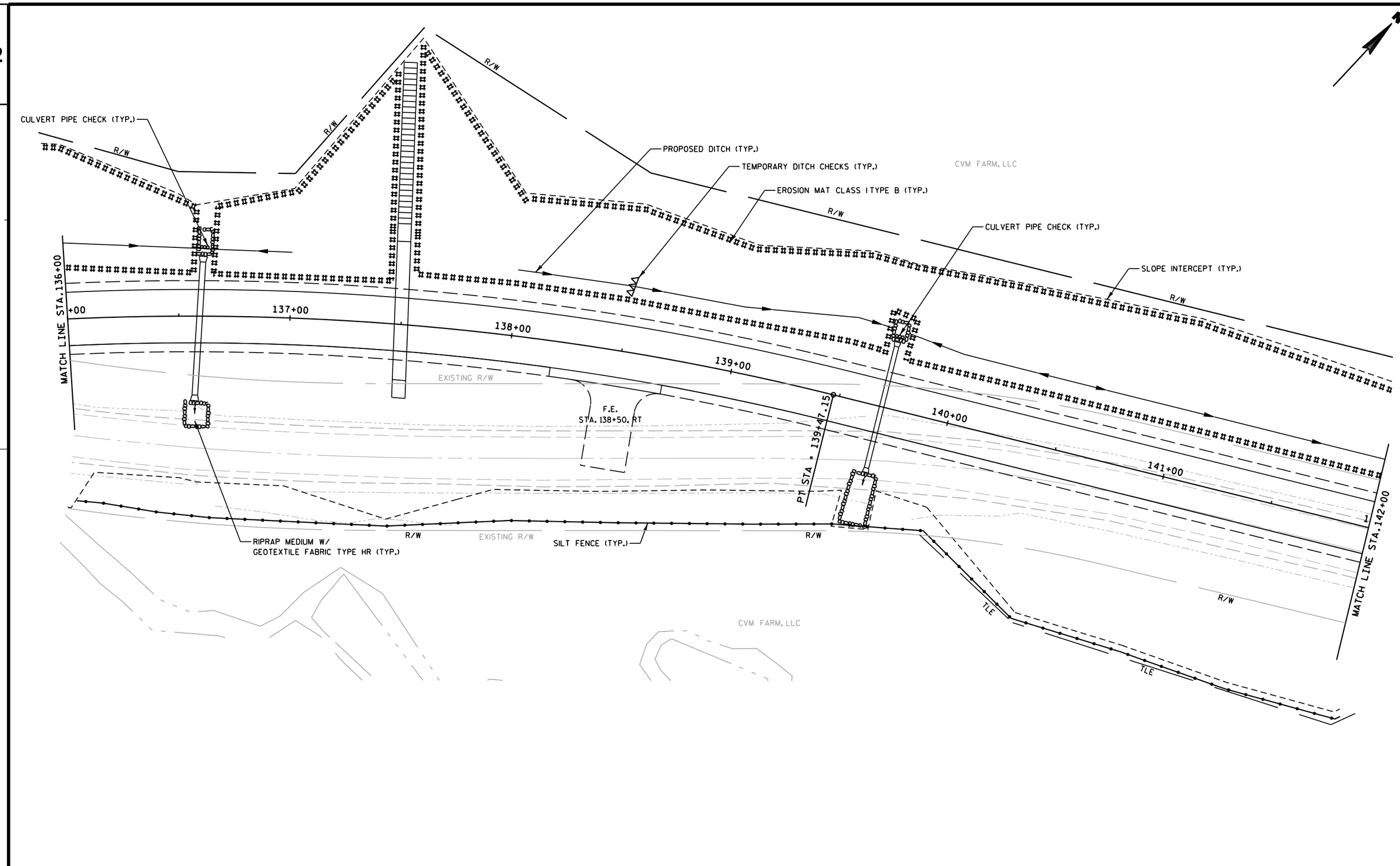

2

PROJECT NO:5648-00-72	HWY:CTH D	COUNTY:LAFAYETTE	EROSION CONTROL	SHEET 15	E

2

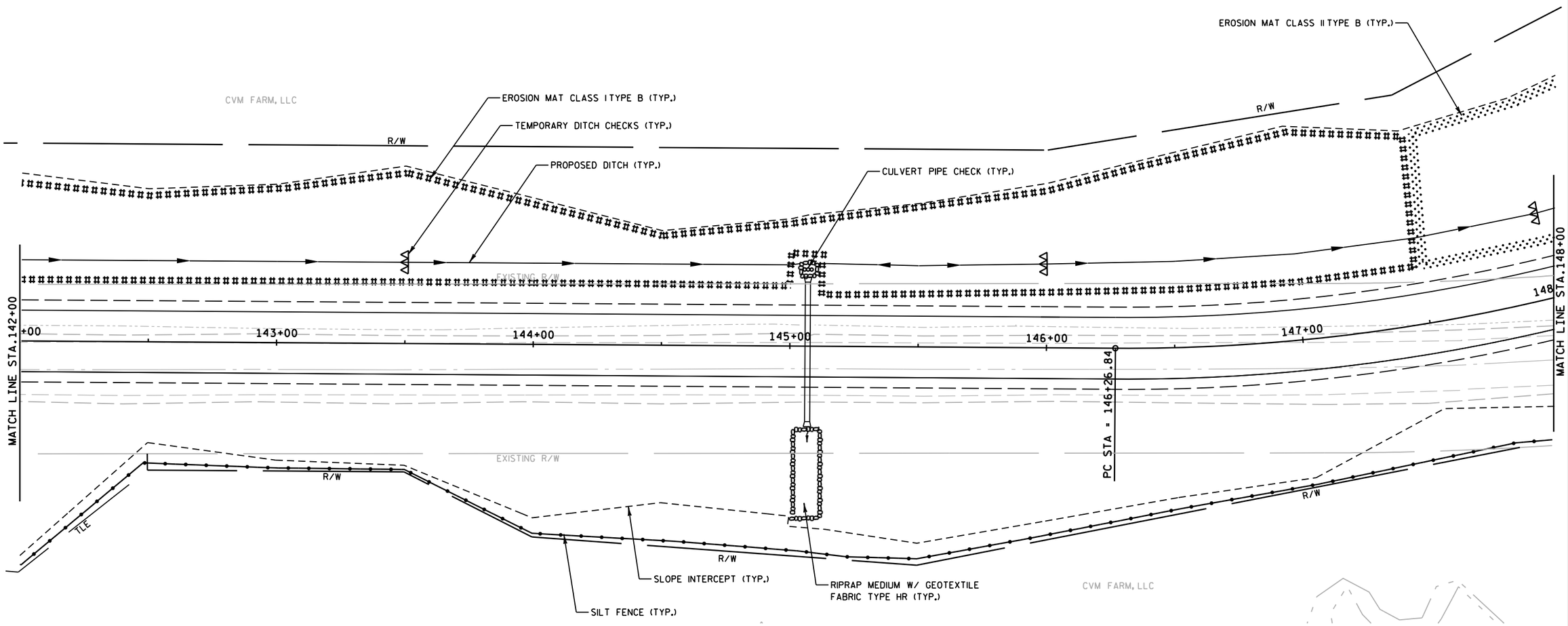

PROJECT NO:5648-00-72	HWY:CTH D	COUNTY:LAFAYETTE	EROSION CONTROL	SHEET 16	E

2

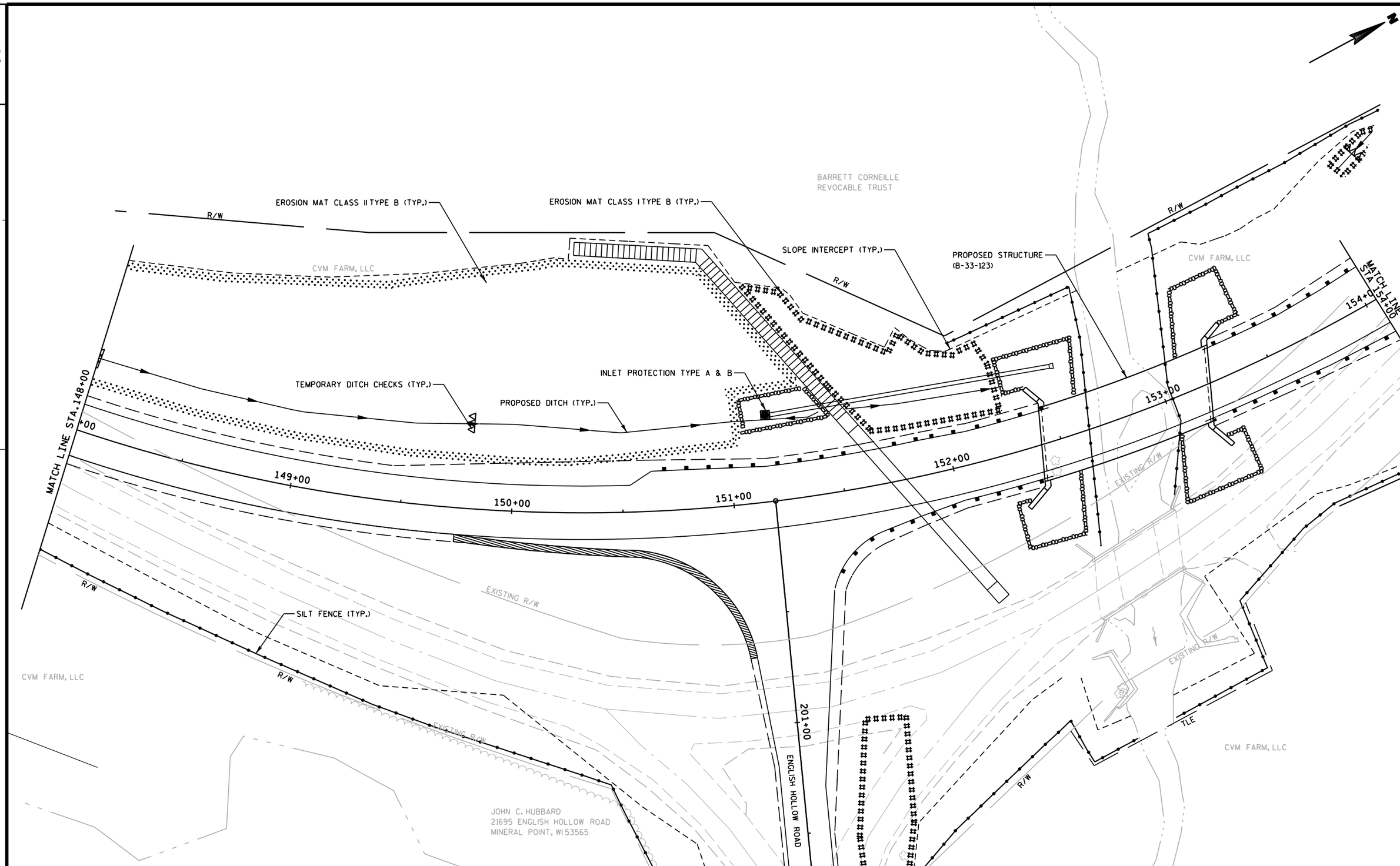

PROJECT NO:5648-00-72	HWY:CTH D	COUNTY:LAYAYETTE	EROSION CONTROL	SHEET 17	E

FILE NAME : $$....designfile....$$ PLOT DATE : $$...plottingdate...$$ PLOT BY : $$...plotuser...$$ PLOT NAME : PLOT SCALE : $$.....plotscale.....$$ WISDOT/CADDS SHEET 42

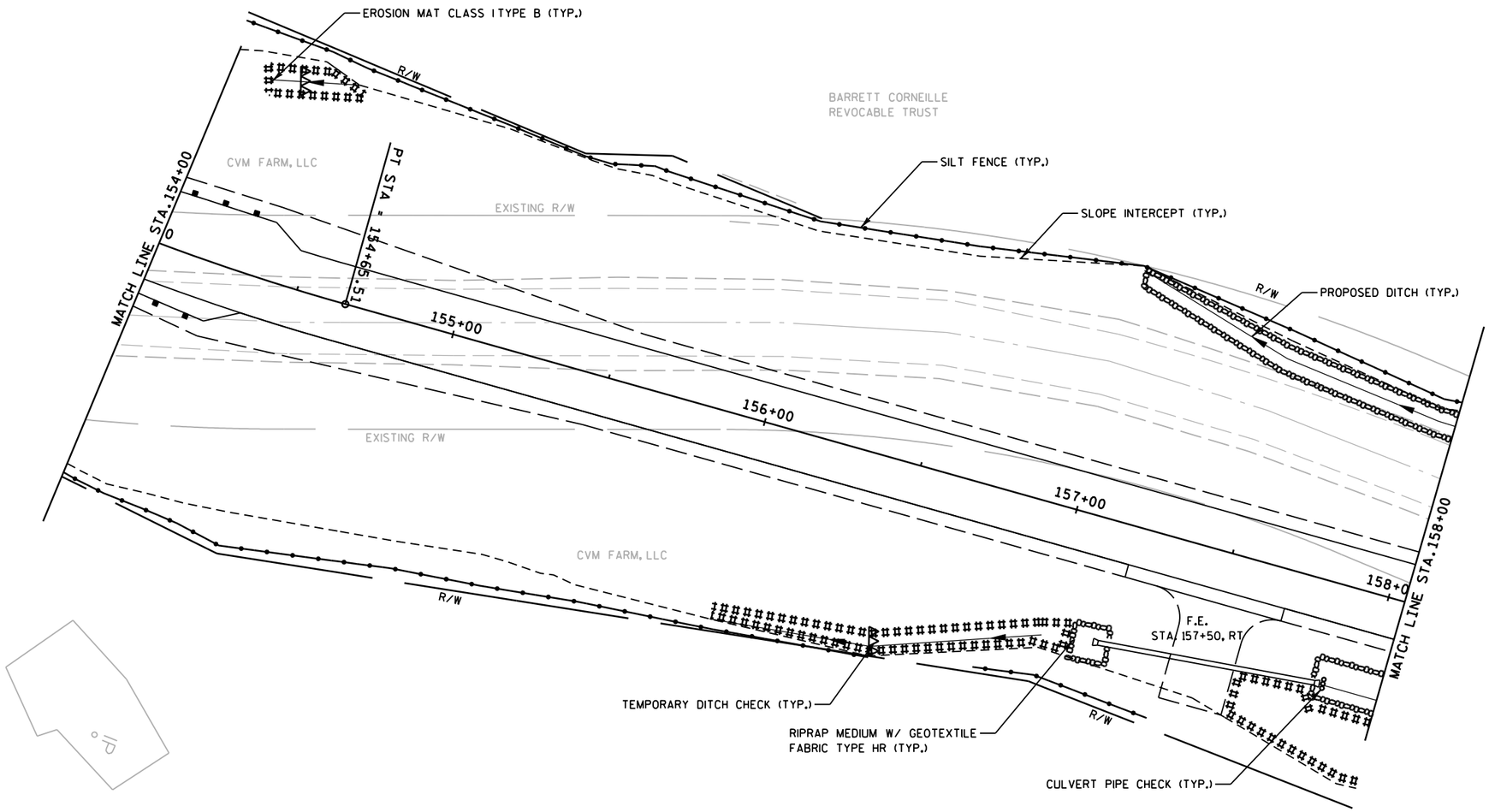

PROJECT NO:5648-00-72	HWY:CTH D	COUNTY:LAFAYETTE	EROSION CONTROL	SHEET 18	E

FILE NAME : $$....designfile....$$ PLOT DATE : $$...plottingdate...$$ PLOT BY : $$...plotuser...$$ PLOT NAME : PLOT SCALE : $$.....plotscale.....$$ WISDOT/CADDS SHEET 42

2

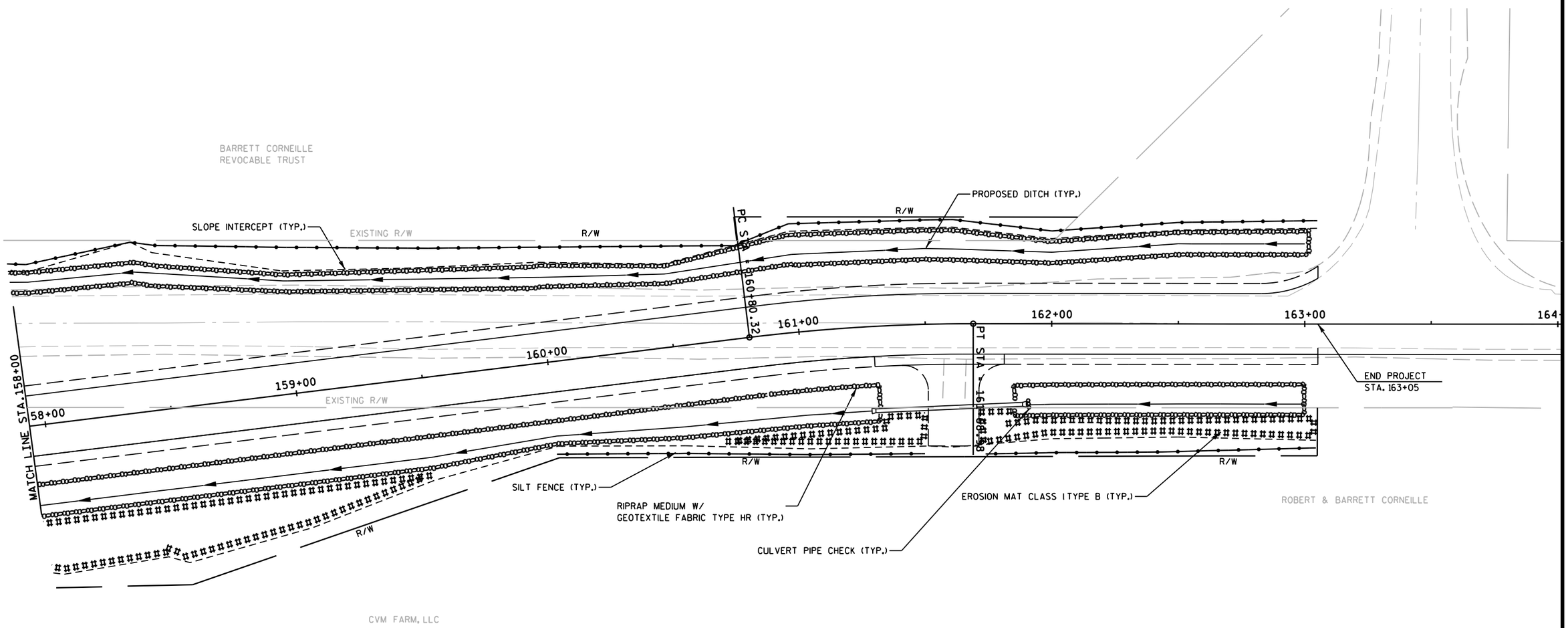

2

PROJECT NO:5648-00-72	HWY:CTH D	COUNTY:LAFAYETTE	EROSION CONTROL	SHEET 19	E

FILE NAME : $$....designfile....$$ PLOT DATE : $$...plottingdate...$$ PLOT BY : $$...plotuser...$$ PLOT NAME : PLOT SCALE : $$.....plotscale.....$$ WISDOT/CADDS SHEET 42

2

2

N

CTH D

151+00

201+00

202+00

203+00

204+00

205+00

206+00

R/W

R/W

R/W

R/W

RIPRAP MEDIUM W/ GEOTEXTILE
FABRIC TYPE HR (TYP.)

EROSION MAT CLASS 1 TYPE B (TYP.)

SILT FENCE (TYP.)

SLOPE INTERCEPT (TYP.)

END CONSTRUCTION
STA. 204+00

EXISTING R/W

ENGLISH HOLLOW ROAD

EXISTING R/W

CVM FARM, LLC

JOHN C. HUBBARD
21695 ENGLISH HOLLOW ROAD
MINERAL POINT, WI 53565

PC STA = 201+91.24

500+00

PT STA = 499+76.72

P.E.
STA. 202+61 RT

PT STA = 203+24.04

PC STA = 499+46.89

CULVERT PIPE CHECKS (TYP.)

499+00

BOP STA = 498+80.07

PROJECT NO:5648-00-72	HWY:CTH D	COUNTY:LAFAYETTE	EROSION CONTROL	SHEET 20	E

FILE NAME : $$....designfile....$$ PLOT DATE : $$...plottingdate...$$ PLOT BY : $$...plotuser...$$ PLOT NAME : PLOT SCALE : $$.....plotscale.....$$ WISDOT/CADDS SHEET 42

2

JAMES & MARY MEYLOR
16209 COUNTY ROAD G
MINERAL POINT, WI 53565

40 M.P.H. (TO REMAIN)

EXISTING 4-INCH DOUBLE YELLOW PAVEMENT MARKINGS TO REMAIN

MATCH INTO EXISTING PAVEMENT MARKINGS

PAVEMENT MARKING PAINT 4-INCH, WHITE EDGELINE

PAVEMENT MARKING PAINT 4-INCH, DOUBLE YELLOW

PC STA = 110+34.22

105+00 106+00 107+00 108+00 109+00 110+00 111

CTH D

1" 11" 11" 1"

MATCH LINE STA. 111+00

STEVE AND DAWN FERRELL
N55 W21331 LOGAN DRIVE
MENOMONEE FALLS, WI 53051

CVM FARM, LLC

NOTE: ALL EXISTING SIGNS TO BE REMOVED AND SALVAGED BY CONTRACTOR FOR LAFAYETTE COUNTY UNLESS OTHERWISE NOTED.

JAMES & MARY MEYLOR
16209 COUNTY ROAD G
MINERAL POINT, WI 53565

CVM FARM, LLC

EXISTING CTH D

PAVEMENT MARKING PAINT 4-INCH, WHITE EDGELINE

CTH D

112+00 113+00 114+00 115+00 116+00 117

1" 11" 11" 1"

PAVEMENT MARKING PAINT 4-INCH, DOUBLE YELLOW

21333 MOVING SIGNS TYPE II

MATCH LINE STA. 111+00

MATCH LINE STA. 117+00

CVM FARM, LLC

NOTE: ALL EXISTING SIGNS TO BE REMOVED AND SALVAGED BY CONTRACTOR FOR LAFAYETTE COUNTY UNLESS OTHERWISE NOTED.

PROJECT NO:5648-00-72	HWY:CTH D	COUNTY:LAFAYETTE	PERMANENT SIGNING & PAVEMENT MARKINGS	SHEET 21	E

FILE NAME : $$....designfile....$$ PLOT DATE : $$...plottingdate...$$ PLOT BY : $$...plotuser...$$ PLOT NAME : PLOT SCALE : $$.....plotscale.....$$ WISDOT/CADDS SHEET 42

2

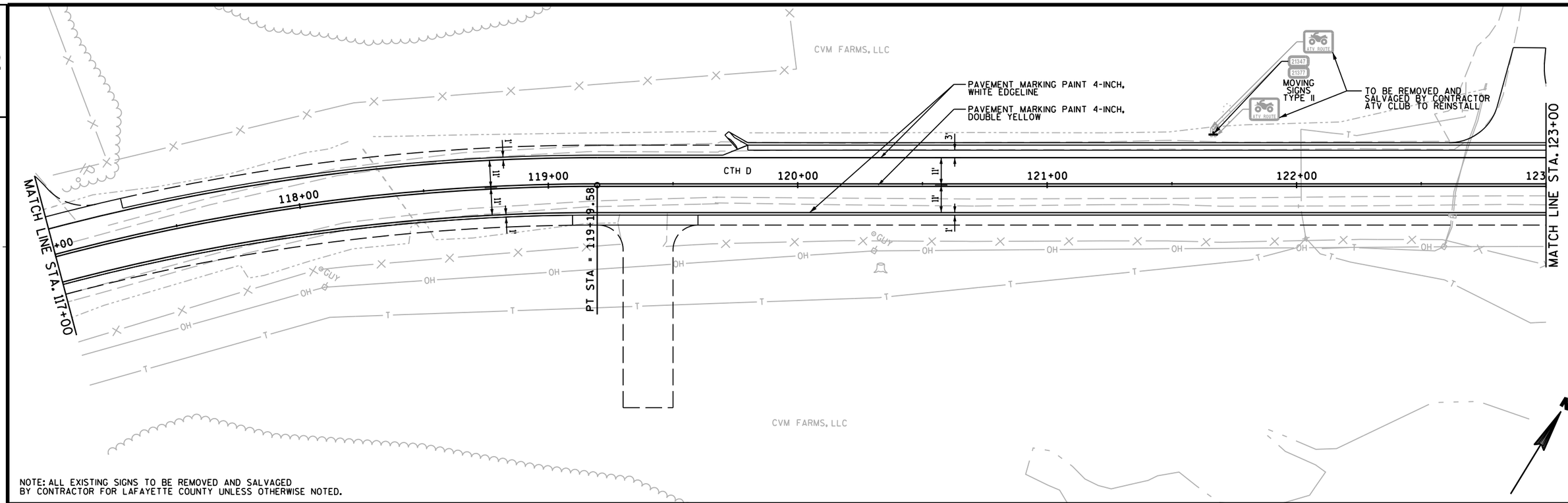

NOTE: ALL EXISTING SIGNS TO BE REMOVED AND SALVAGED BY CONTRACTOR FOR LAFAYETTE COUNTY UNLESS OTHERWISE NOTED.

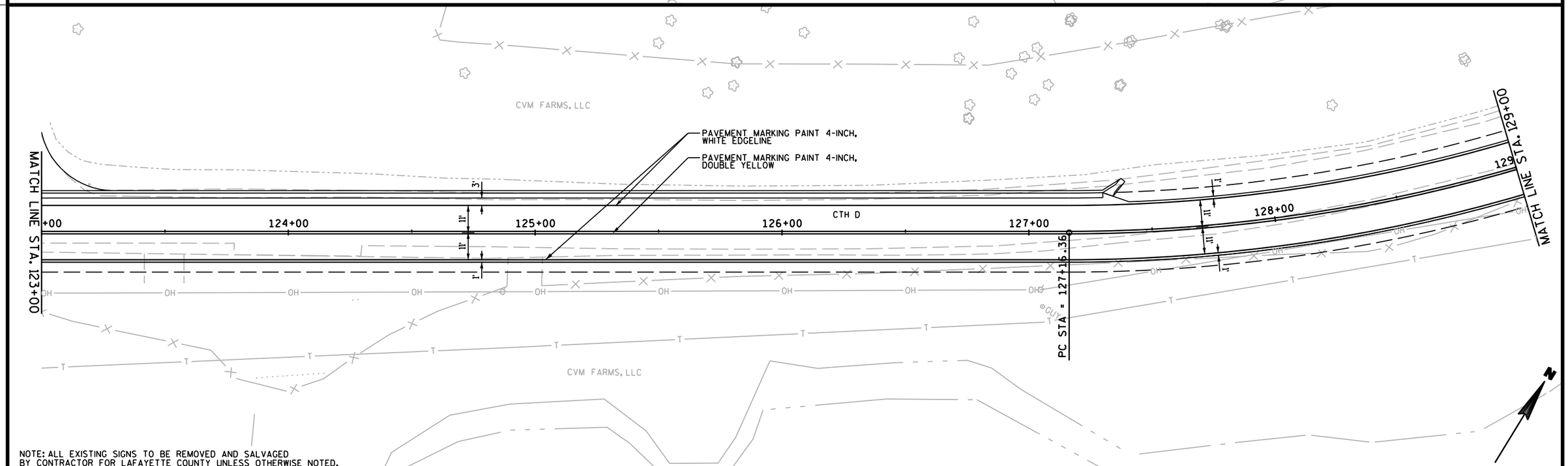

NOTE: ALL EXISTING SIGNS TO BE REMOVED AND SALVAGED BY CONTRACTOR FOR LAFAYETTE COUNTY UNLESS OTHERWISE NOTED.

PROJECT NO:5648-00-72	HWY:CTH D	COUNTY:LAFAYETTE	PERMANENT SIGNING & PAVEMENT MARKINGS	SHEET 22	E

FILE NAME : $$....designfile....$$ PLOT DATE : $$...plottingdate...$$ PLOT BY : $$...plotuser...$$ PLOT NAME : PLOT SCALE : $$.....plotscale.....$$ WISDOT/CADDS SHEET 42

2

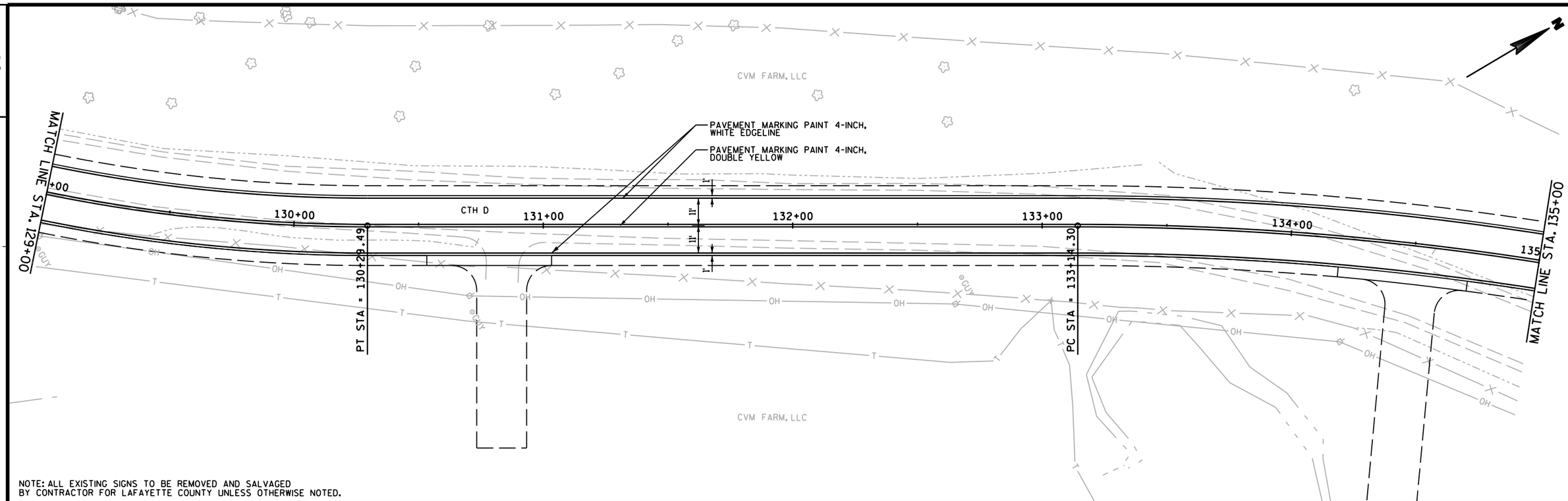

NOTE: ALL EXISTING SIGNS TO BE REMOVED AND SALVAGED BY CONTRACTOR FOR LAFAYETTE COUNTY UNLESS OTHERWISE NOTED.

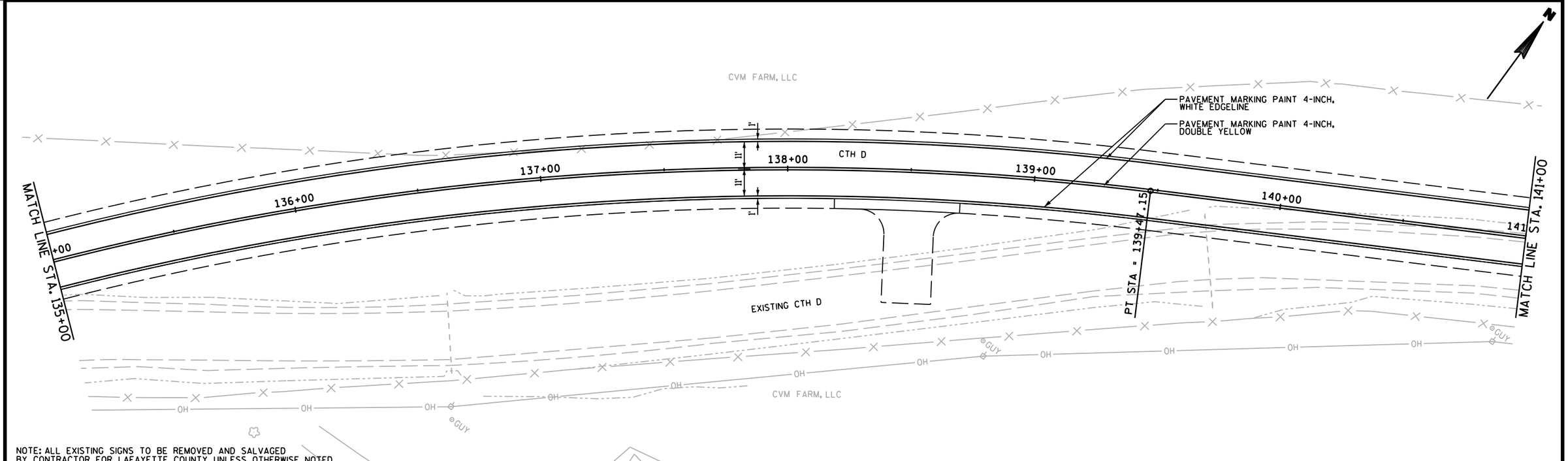

NOTE: ALL EXISTING SIGNS TO BE REMOVED AND SALVAGED BY CONTRACTOR FOR LAFAYETTE COUNTY UNLESS OTHERWISE NOTED.

PROJECT NO:5648-00-72	HWY:CTH D	COUNTY:LAFAYETTE	PERMANENT SIGNING & PAVEMENT MARKINGS	SHEET 23	E

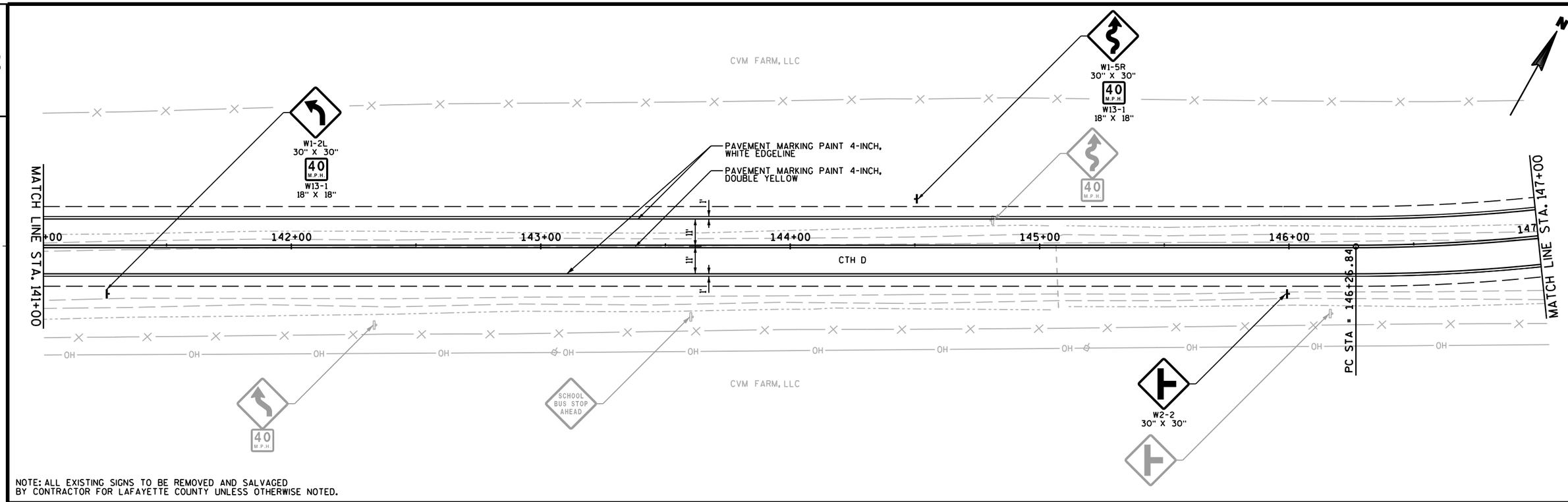

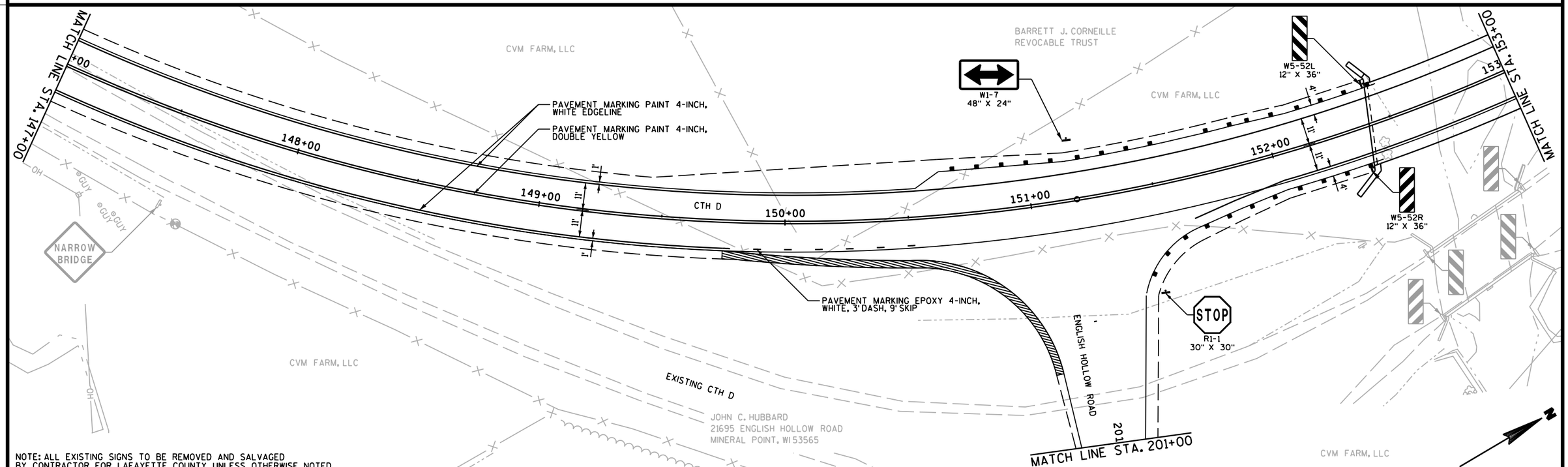

PROJECT NO:5648-00-72	HWY:CTH D	COUNTY:LAFAYETTE	PERMANENT SIGNING & PAVEMENT MARKINGS	SHEET 24	E

FILE NAME : $$....designfile....$$ PLOT DATE : $$...plottingdate...$$ PLOT BY : $$...plotuser...$$ PLOT NAME : PLOT SCALE : $$.....plotscale.....$$ WISDOT/CADDS SHEET 42

2

BARRETT J. CORNEILLE
REVOCABLE TRUST

W5-52R
12" X 36"

W5-52L
12" X 36"

CVM FARM, LLC

PUBLIC FISHING ONLY
TO BE REMOVED BY OTHERS

MATCH LINE STA. 153+00

PT STA = 154+65.51

154+00

155+00

156+00

157+00

158+00

159

MATCH LINE STA. 159+00

W2-2
30" X 30"

NARROW BRIDGE

EXISTING CTH D

PAVEMENT MARKING PAINT 4-INCH, WHITE EDGELINE

PAVEMENT MARKING PAINT 4-INCH, DOUBLE YELLOW

CTH D

JCT COUNTY S COUNTY W

CVM FARM, LLC

J1-2
48" X 39"

JCT COUNTY S JCT COUNTY W

NOTE: ALL EXISTING SIGNS TO BE REMOVED AND SALVAGED BY CONTRACTOR FOR LAFAYETTE COUNTY UNLESS OTHERWISE NOTED.

2

COUNTY D

BARRETT J. CORNEILLE
REVOCABLE TRUST

PAVEMENT MARKING PAINT 4-INCH, WHITE EDGELINE

LaFayette County
MOVING SIGNS TYPE II

PAVEMENT MARKING PAINT 4-INCH, DOUBLE YELLOW

EXISTING CTH D

MATCH LINE STA. 159+00

PC STA = 160+80.32

160+00

161+00

CTH D

COUNTY D
M1-5A
24" X 24"

STOP
(TO REMAIN)

CTH S

EXISTING 4-INCH DOUBLE YELLOW PAVEMENT MARKINGS TO REMAIN

COUNTY S COUNTY D
(TO REMAIN)

COUNTY S COUNTY D
(TO REMAIN)

W1-5R
30" X 30"
40 M.P.H.
W13-1
18" X 18"

162+00

PT STA = 161+68.98

163+00

MATCH INTO EXISTING PAVEMENT MARKINGS

EXISTING 4-INCH DOUBLE YELLOW PAVEMENT MARKINGS TO REMAIN

164+00

CTH W

EOP STA = 164+75.80

CVM FARM, LLC

ROBERT & BARRETT CORNEILLE

(TO REMAIN)
COUNTY W COUNTY D
Fayette
Waldwick

Welcome to Iowa County
(TO REMAIN)

COUNTY W
(TO REMAIN)

NOTE: ALL EXISTING SIGNS TO BE REMOVED AND SALVAGED BY CONTRACTOR FOR LAFAYETTE COUNTY UNLESS OTHERWISE NOTED.

PROJECT NO:5648-00-72	HWY:CTH D	COUNTY:LAFAYETTE	PERMANENT SIGNING & PAVEMENT MARKINGS	SHEET 25	E

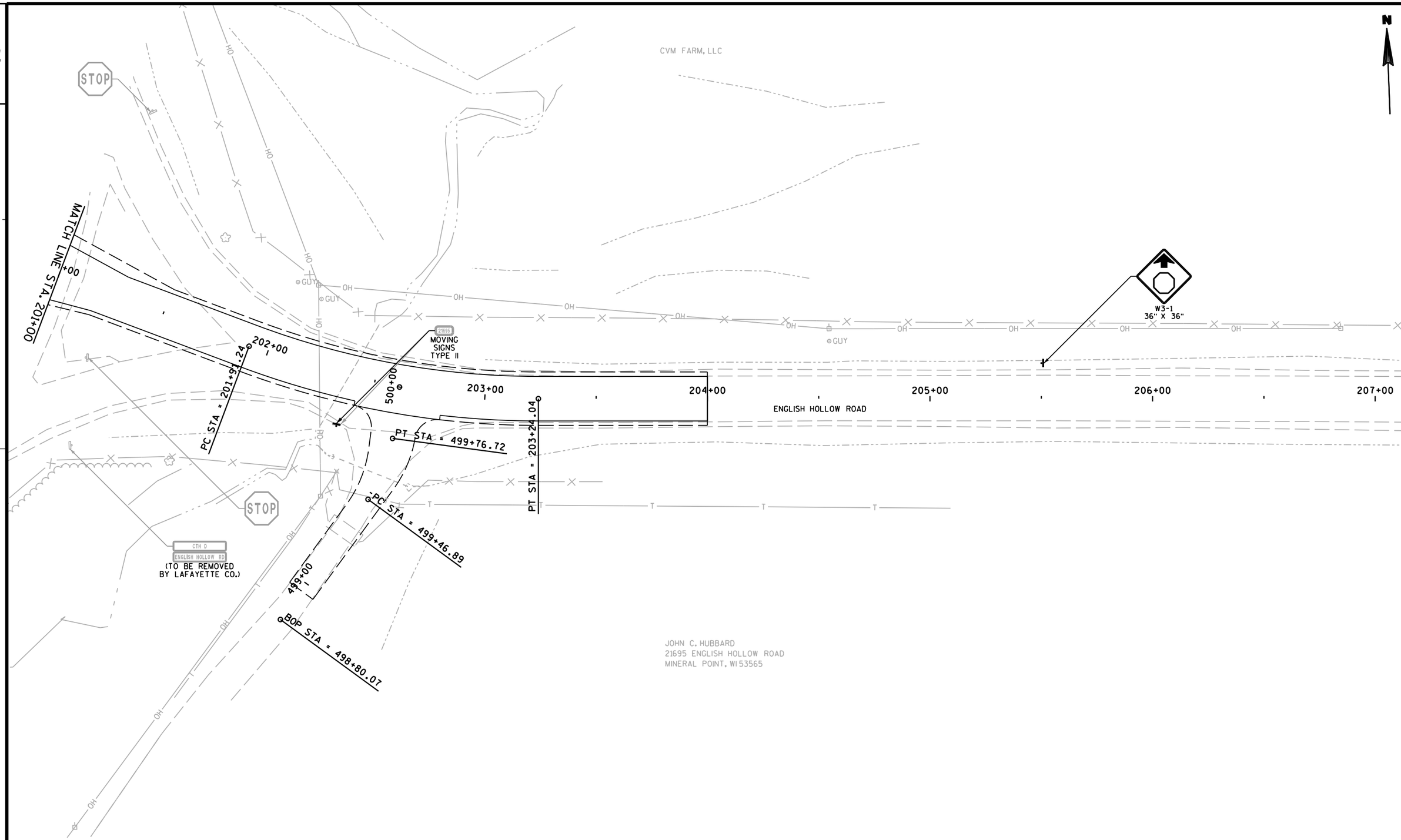

NOTE: ALL EXISTING SIGNS TO BE REMOVED AND SALVAGED
BY CONTRACTOR FOR LAFAYETTE COUNTY UNLESS OTHERWISE NOTED.

PROJECT NO:5648-00-72	HWY:CTH D	COUNTY:LAFAYETTE	PERMANENT SIGNING & PAVEMENT MARKINGS	SHEET 26	E

2

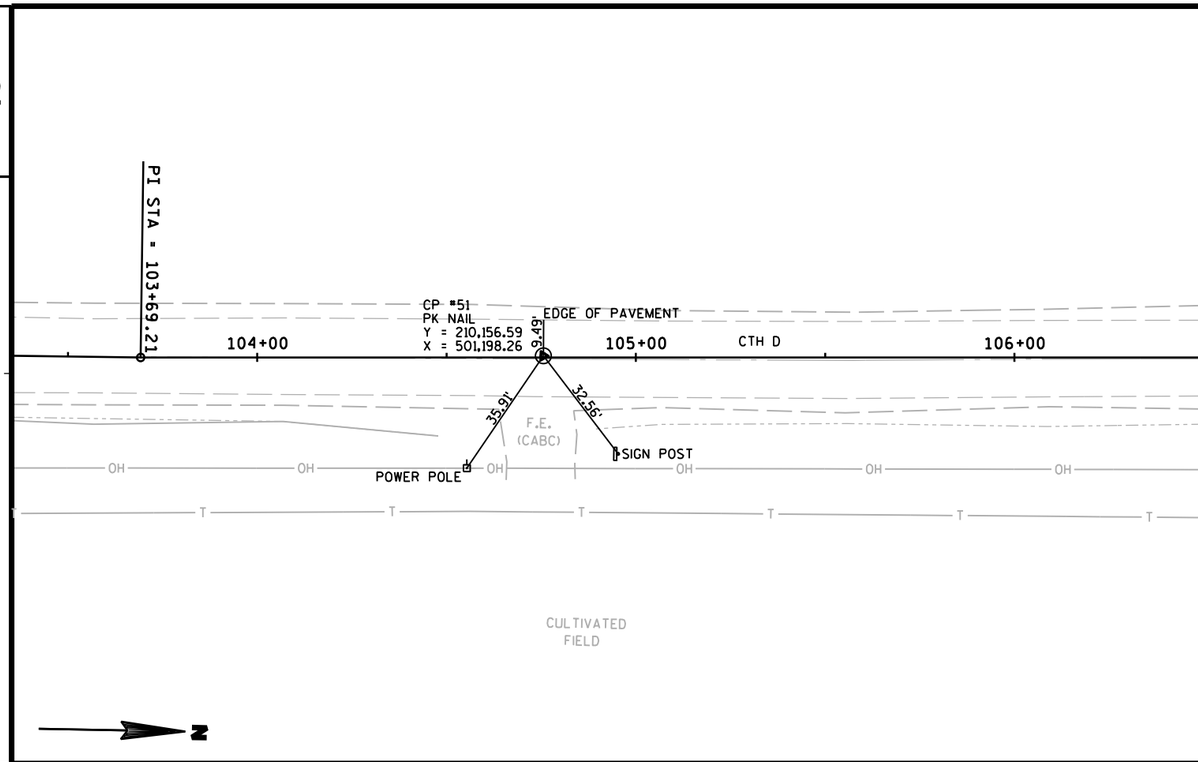

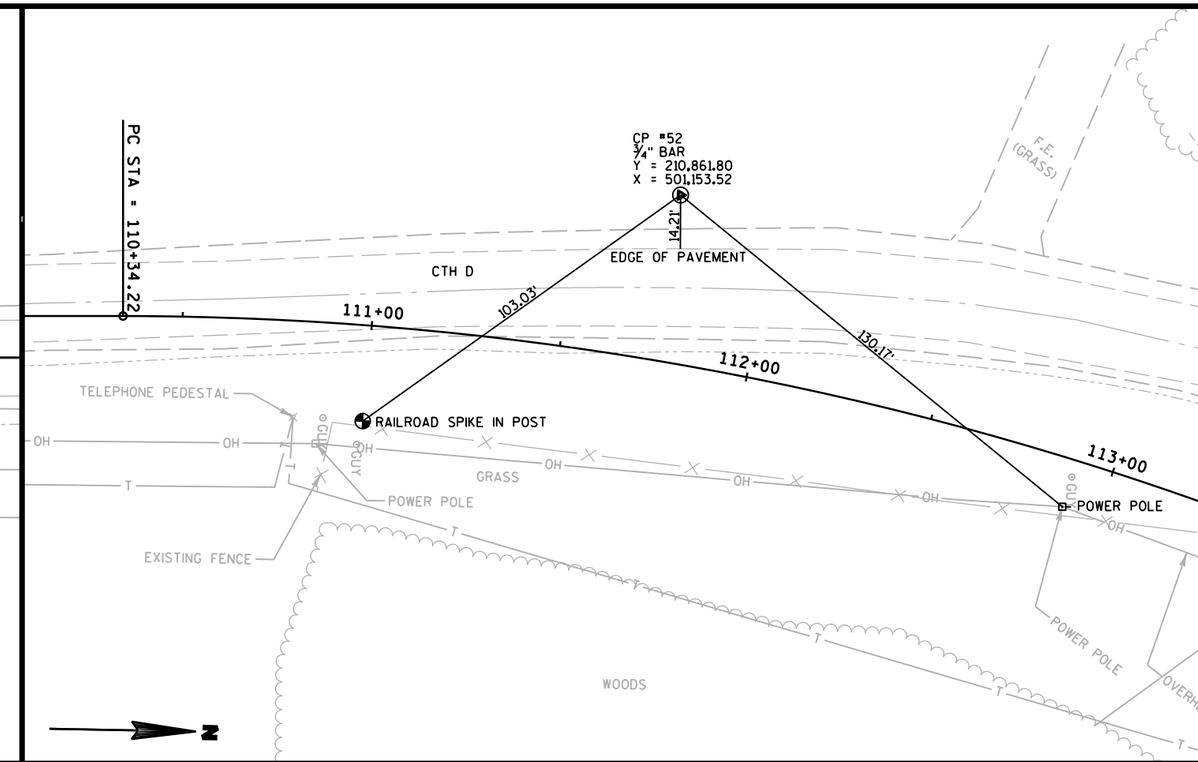

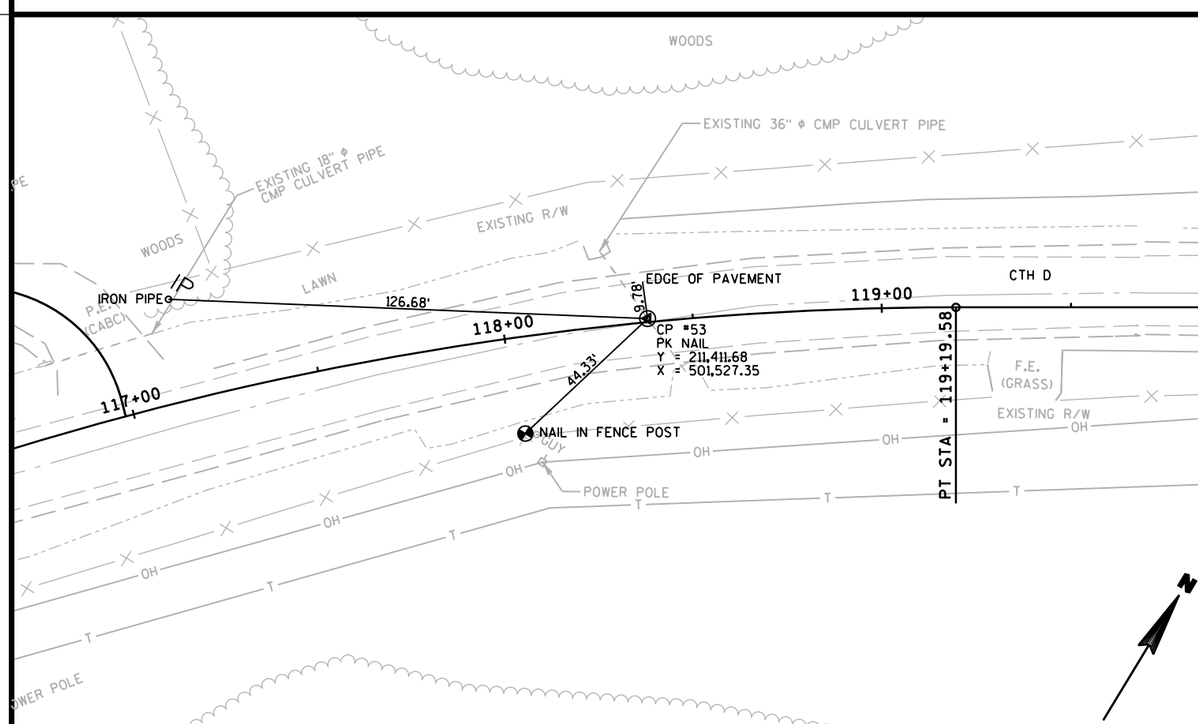

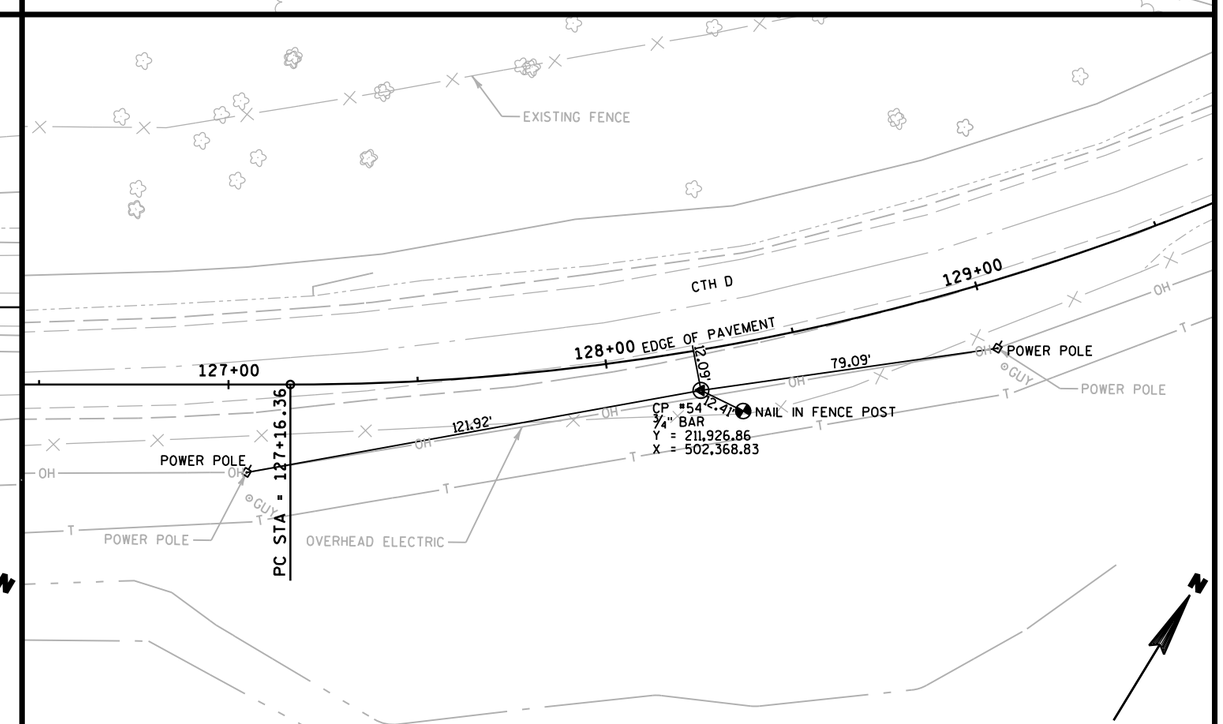

PROJECT NO:5648-00-72	HWY:CTH D	COUNTY:LAFAYETTE	CONTROL POINT TIES	SHEET 27	E

FILE NAME : $$....designfile....$$ PLOT DATE : $$...plottingdate...$$ PLOT BY : $$...plotuser...$$ PLOT NAME : PLOT SCALE : $$.....plotscale.....$$ WISDOT/CADDS SHEET 42

Control Point 01.dgn 7/23/2012 10:47:12 AM jkurten

2

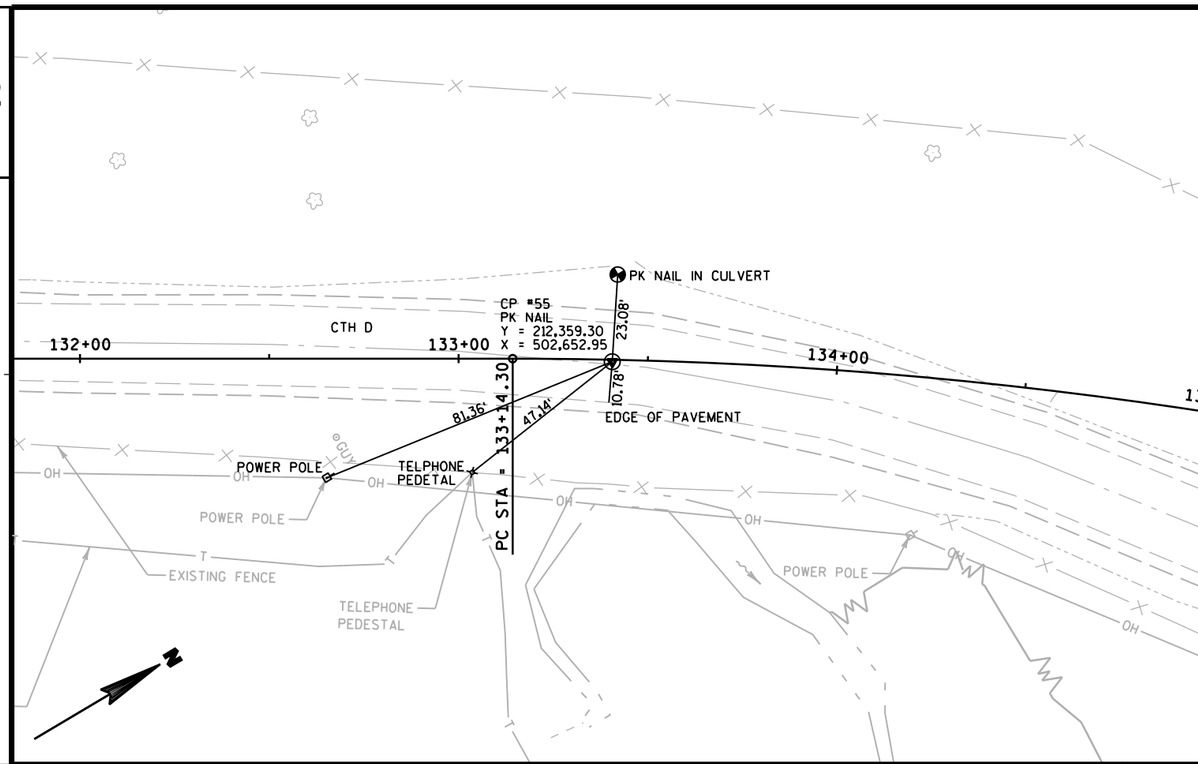

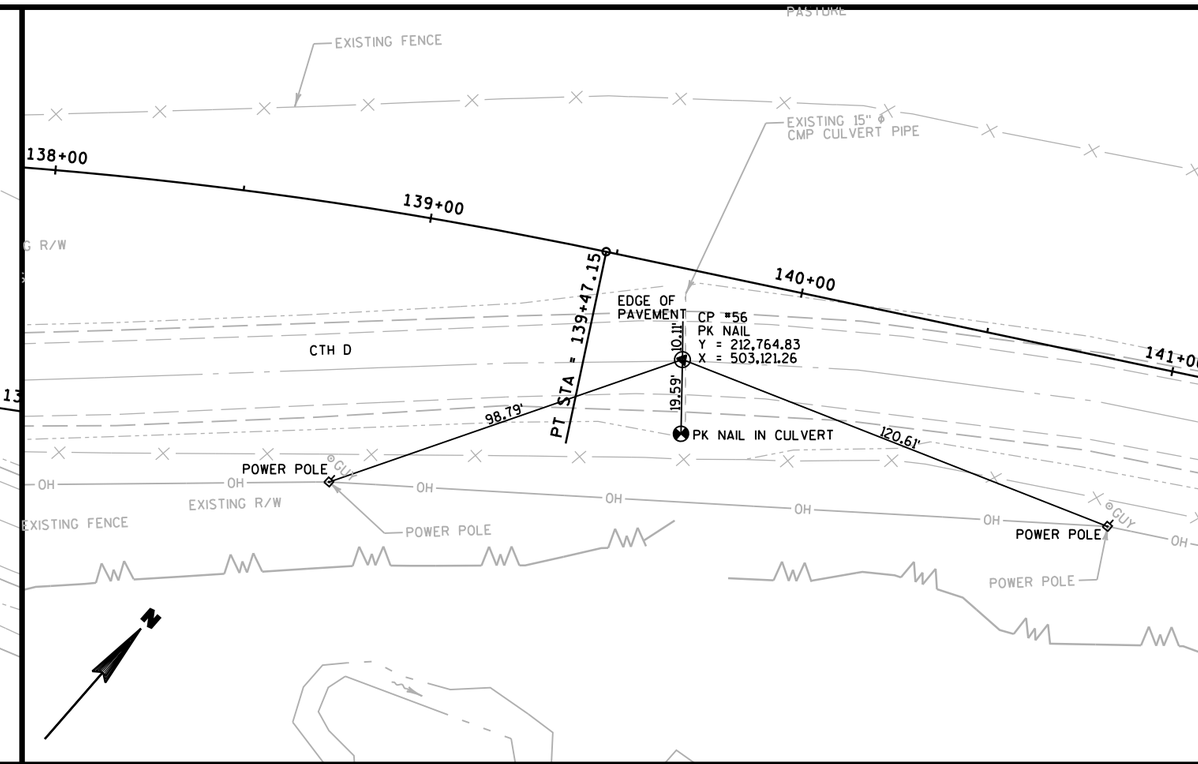

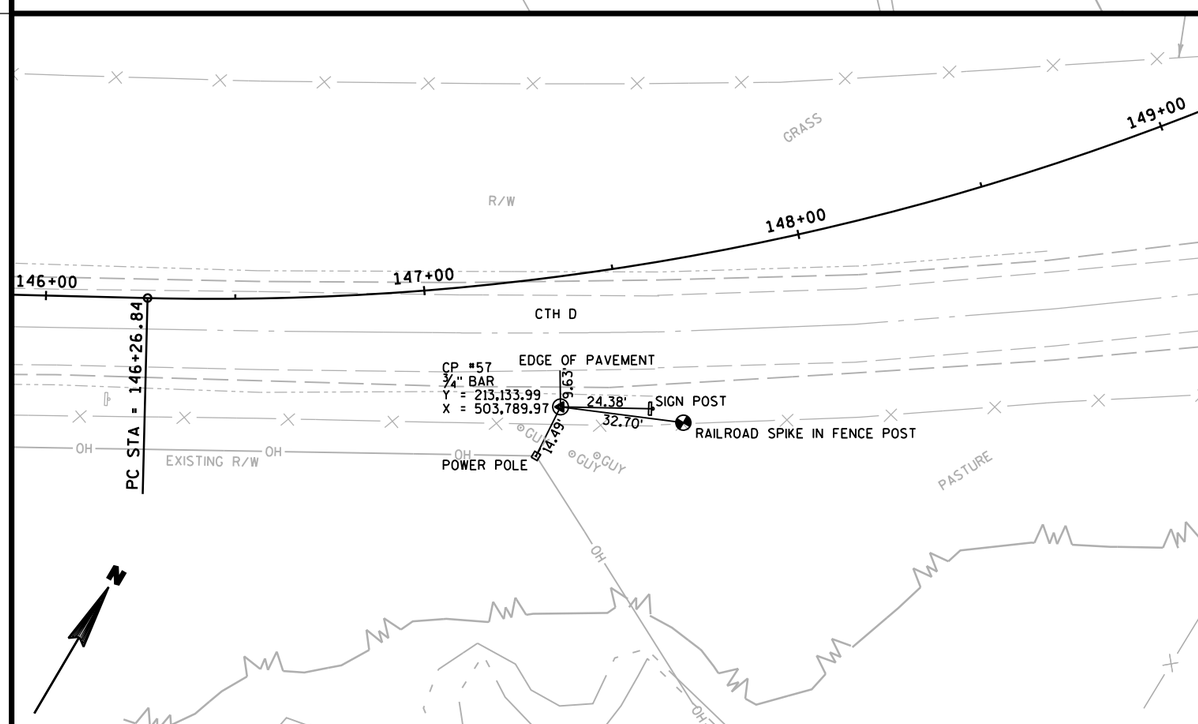

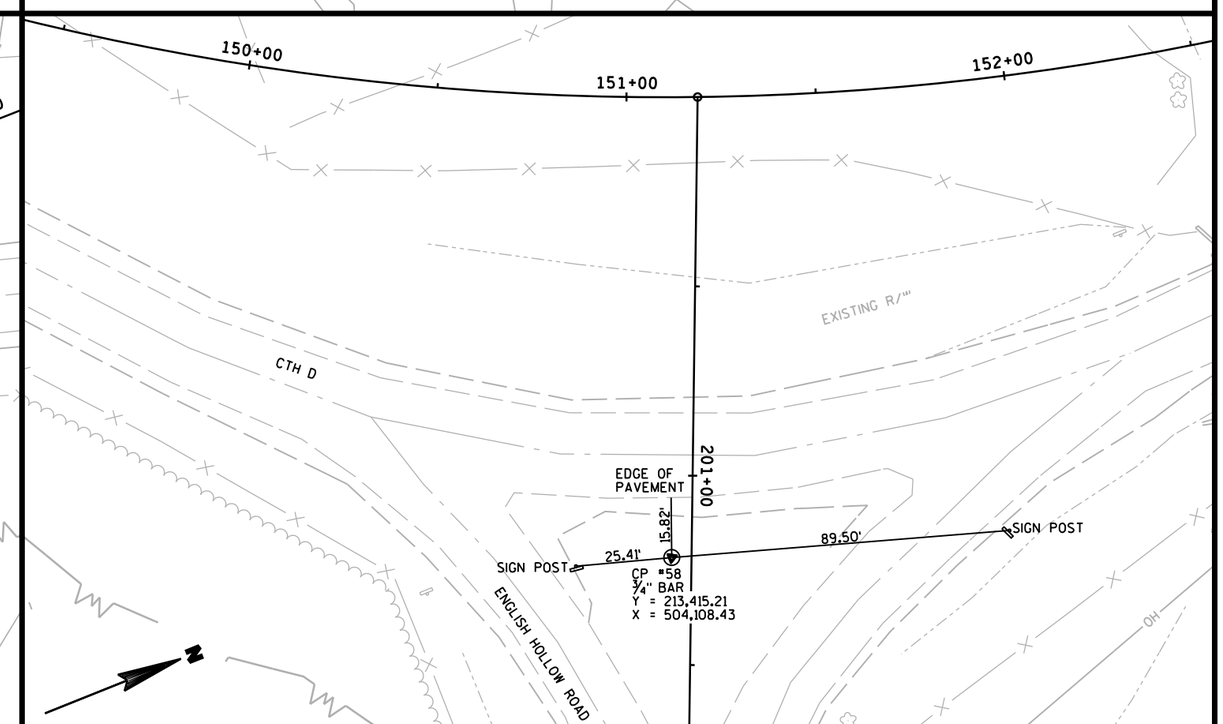

2

PROJECT NO:5648-00-72	HWY:CTH D	COUNTY:LAFAYETTE	CONTROL POINT TIES	SHEET 28	E

Control Point 02.dgn 7/23/2012 10:47:14 AM jkurten

2

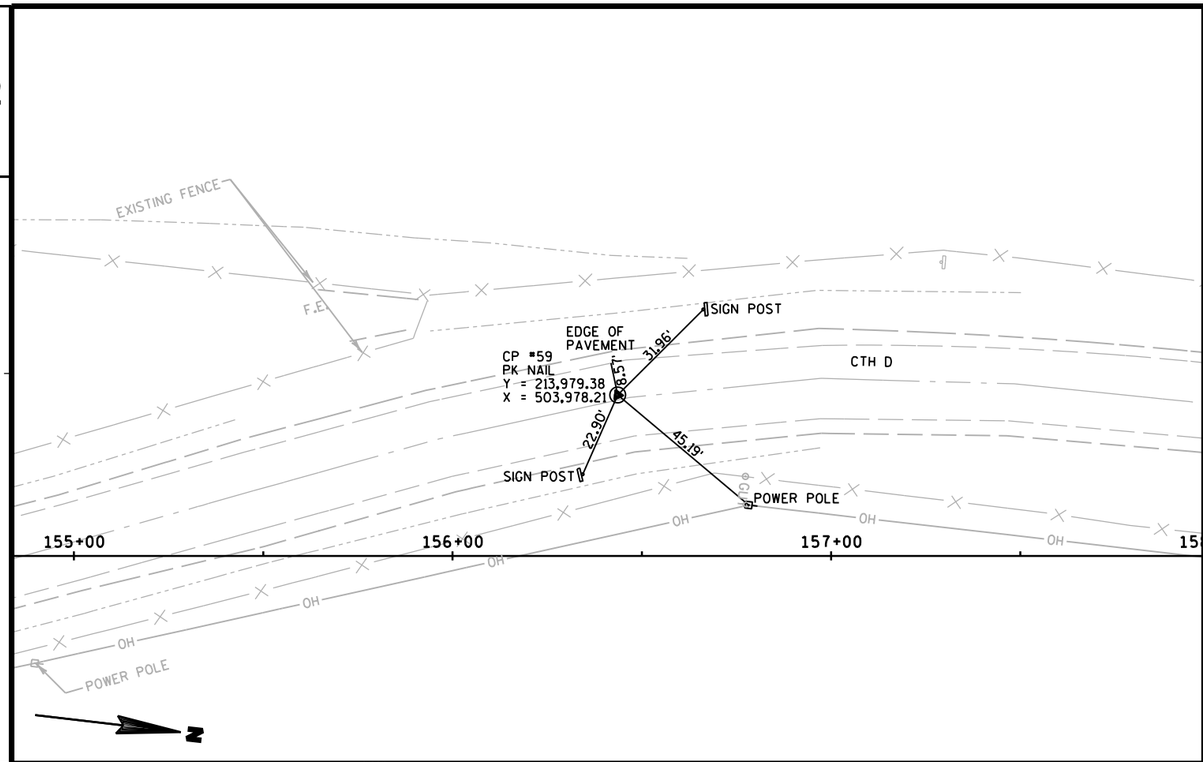

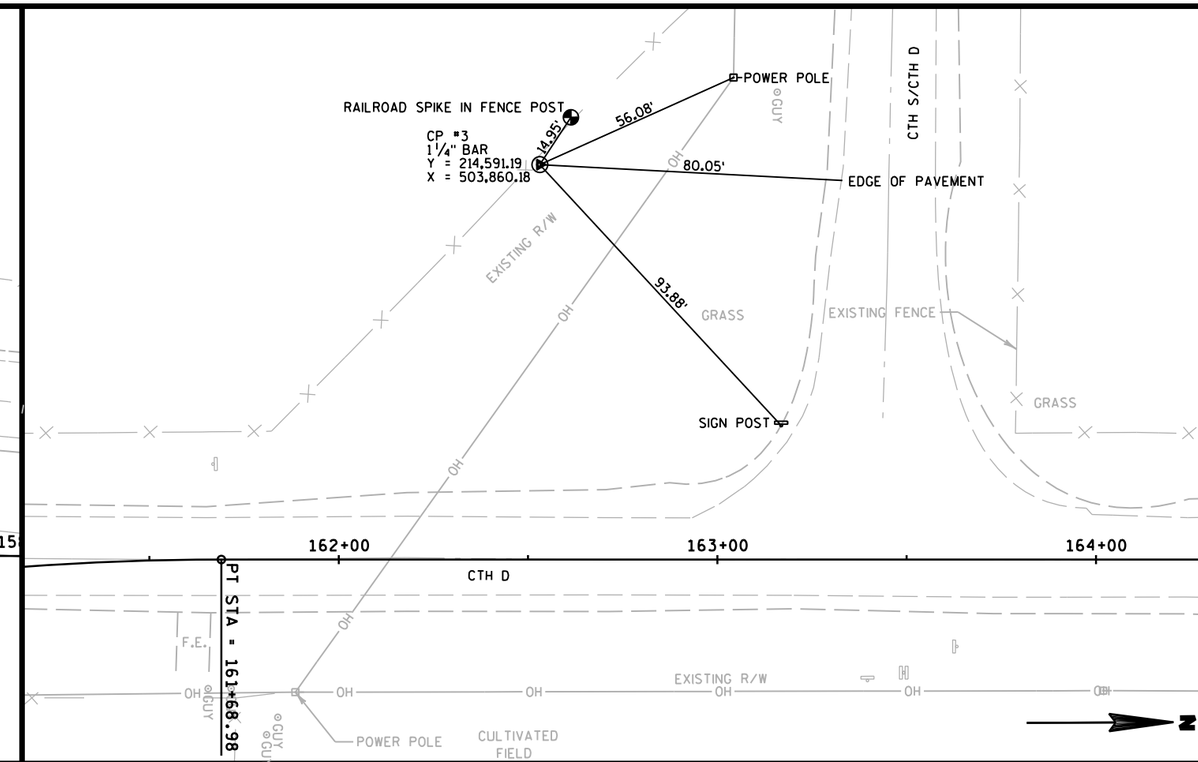

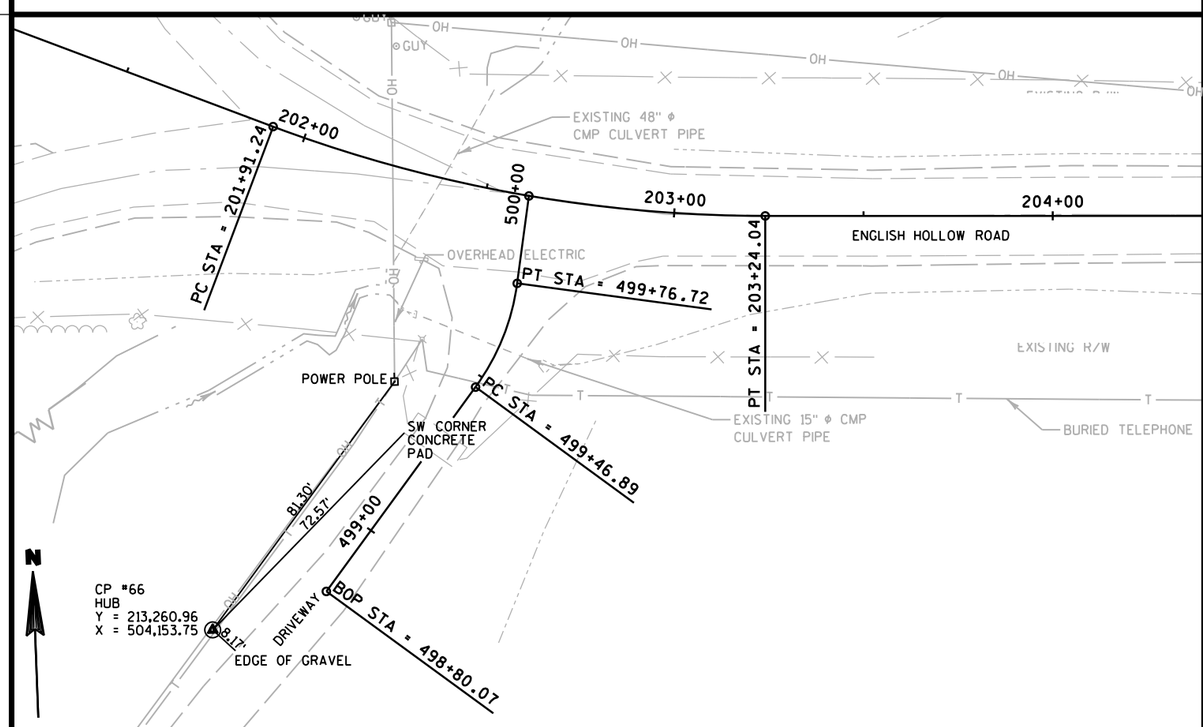

PROJECT NO:5648-00-72	HWY:CTH D	COUNTY:LAFAYETTE	CONTROL POINT TIES	SHEET 29	E

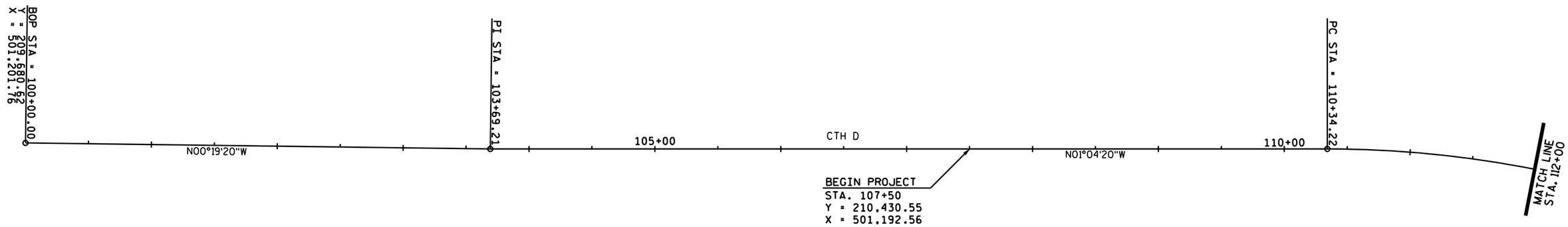

CTH D CURVE & P.I. DATA

P.I. = STA. 103+69.21
Y = 210,049.83
X = 501,199.68
Δ. = 00°45'00"

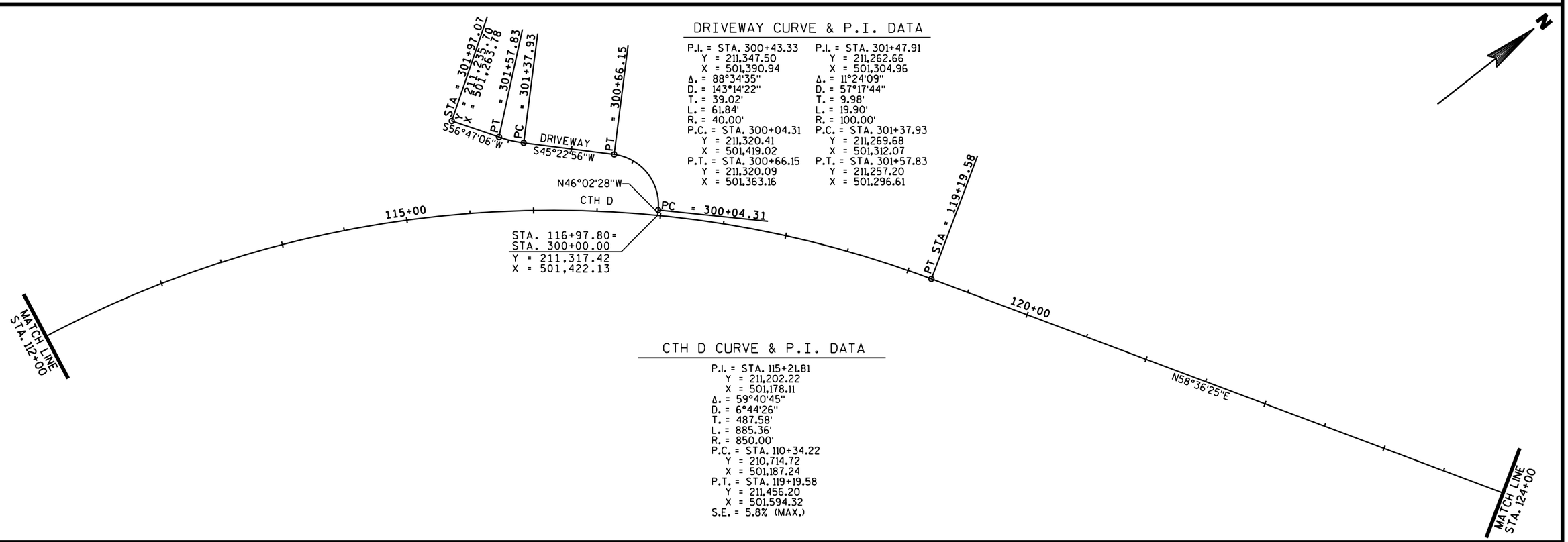

DRIVEWAY CURVE & P.I. DATA

P.I. = STA. 300+43.33
Y = 211,347.50
X = 501,390.94
Δ. = 88°34'35"
D. = 143°14'22"
T. = 39.02'
L. = 61.84'
R. = 40.00'
P.C. = STA. 300+04.31
Y = 211,320.41
X = 501,419.02
P.T. = STA. 300+66.15
Y = 211,320.09
X = 501,363.16

P.I. = STA. 301+47.91
Y = 211,262.66
X = 501,304.96
Δ. = 11°24'09"
D. = 57°17'44"
T. = 9.98'
L. = 19.90'
R. = 100.00'
P.C. = STA. 301+37.93
Y = 211,269.68
X = 501,312.07
P.T. = STA. 301+57.83
Y = 211,257.20
X = 501,296.61

CTH D CURVE & P.I. DATA

P.I. = STA. 115+21.81
Y = 211,202.22
X = 501,178.11
Δ. = 59°40'45"
D. = 6°44'26"
T. = 487.58'
L. = 885.36'
R. = 850.00'
P.C. = STA. 110+34.22
Y = 210,714.72
X = 501,187.24
P.T. = STA. 119+19.58
Y = 211,456.20
X = 501,594.32
S.E. = 5.8% (MAX.)

PROJECT NO:5648-00-72	HWY:CTH D	COUNTY:LAFAYETTE	ALIGNMENT OVERVIEW (CTH D)	SHEET 30	E

2

CTH D CURVE & P.I. DATA

P.I. = STA. 128+76.09
Y = 211,954.46
X = 502,410.81
Δ. = 27°54'07"
D. = 8°54'38"
T. = 159.73'
L. = 313.13'
R. = 643.00'
P.C. = STA. 127+16.36
Y = 211,871.25
X = 502,274.46
P.T. = STA. 130+29.49
Y = 212,091.80
X = 502,492.37
S.E. = 6.0% (MAX.)

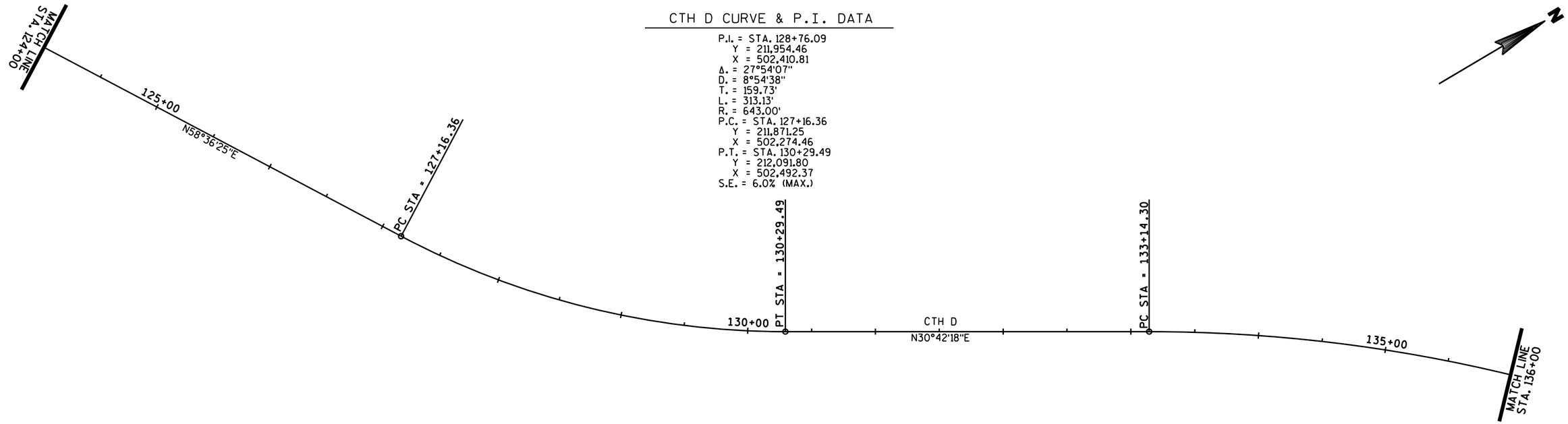

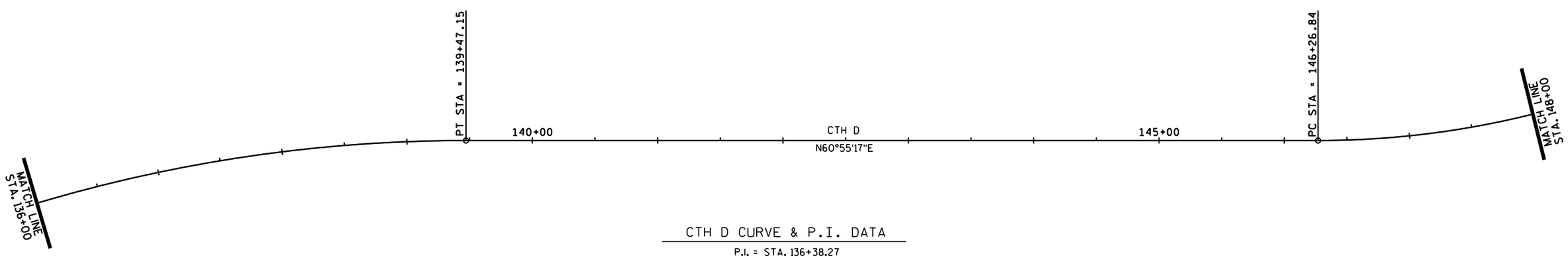

CTH D CURVE & P.I. DATA

P.I. = STA. 136+38.27
Y = 212,615.23
X = 502,803.22
Δ. = 30°12'58"
D. = 4°46'28"
T. = 323.97'
L. = 632.85'
R. = 1,200.00'
P.C. = STA. 133+14.30
Y = 212,336.68
X = 502,637.80
P.T. = STA. 139+47.15
Y = 212,772.68
X = 503,086.35
S.E. = 5.0% (MAX.)

N

2

PROJECT NO:5648-00-72	HWY:CTH D	COUNTY:LAFAYETTE	ALIGNMENT OVERVIEW (CTH D)	SHEET 31	E

Alignment02.dgn 7/23/2012 10:47:18 AM jkurten

2

CTH D CURVE & P.I. DATA

P.I. = STA. 151+02.86
Y = 213,334.37
X = 504,096.39
Δ. = 67°40'44"
D. = 8°04'11"
T. = 476.01'
L. = 838.67'
R. = 710.00'
P.C. = STA. 146+26.84
Y = 213,103.02
X = 503,680.38
P.T. = STA. 154+65.51
Y = 213,807.07
X = 504,040.38
S.E. = 6.0% (MAX.)

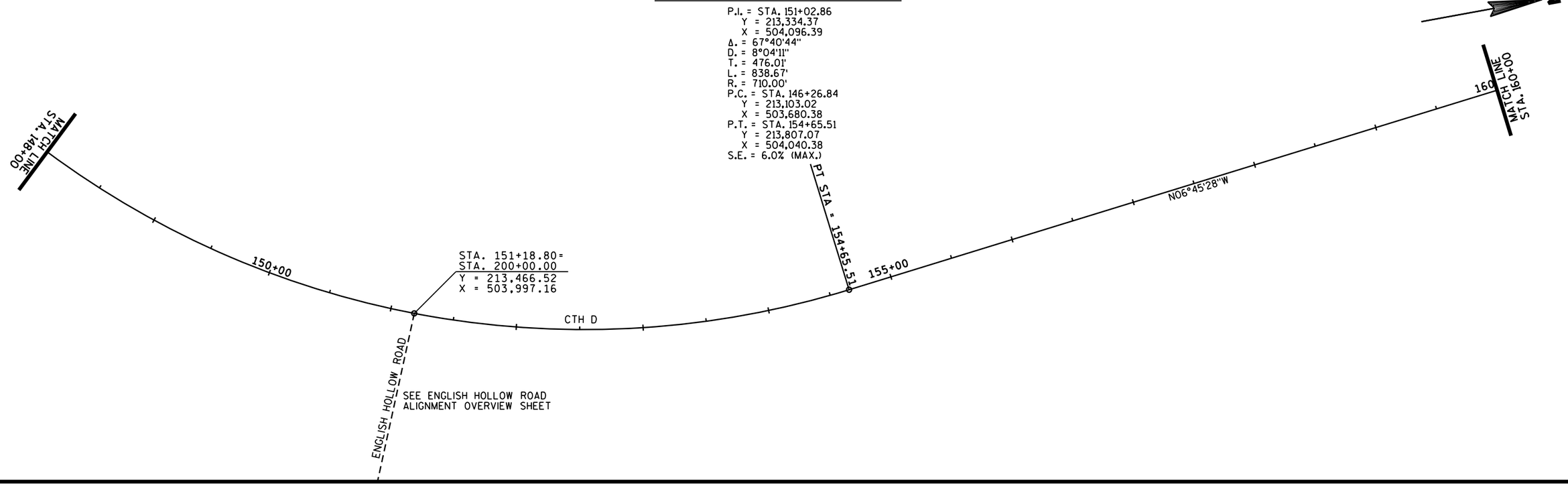

2

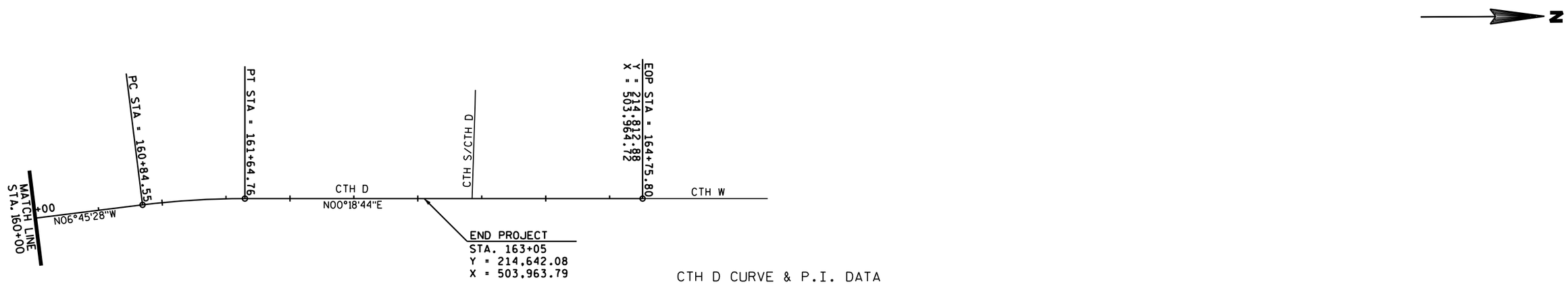

CTH D CURVE & P.I. DATA

P.I. = STA. 161+24.70
Y = 214,461.69
X = 503,962.81
Δ. = 7°04'12"
D. = 7°58'48"
T. = 44.39'
L. = 88.66'
R. = 718.55'
P.C. = STA. 160+80.32
Y = 214,417.60
X = 503,968.03
P.T. = STA. 161+68.98
Y = 214,506.07
X = 503,963.05
S.E. = 6.0% (MAX.)

PROJECT NO:5648-00-72	HWY:CTH D	COUNTY:LAFAYETTE	ALIGNMENT OVERVIEW (CTH D)	SHEET 32	E

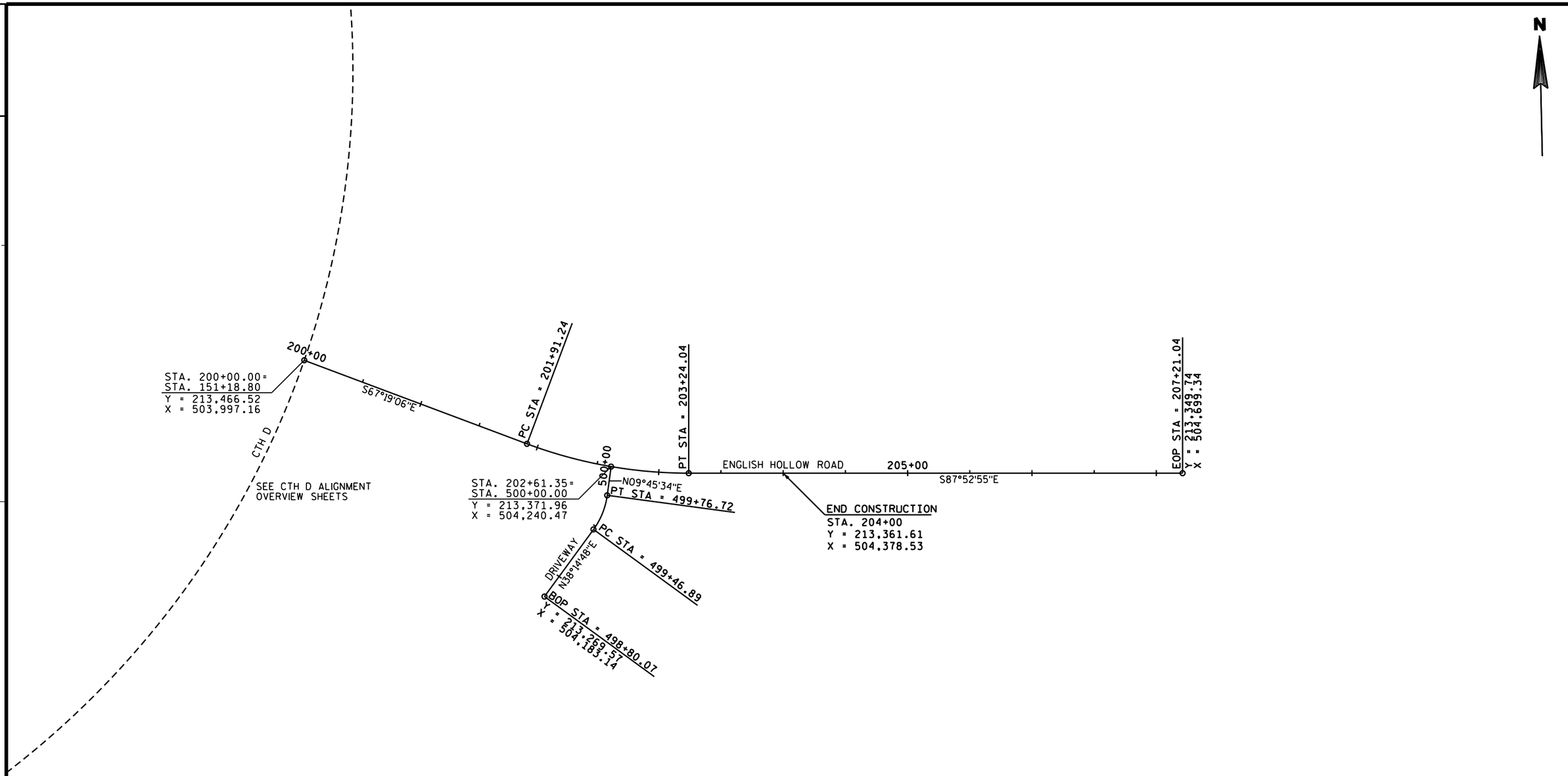

DRIVEWAY CURVE & P.I. DATA

P.I. = STA. 499+62.12
Y = 213,334.01
X = 504,233.93
Δ. = 28°29'13"
D. = 95°29'34"
T. = 15.23'
L. = 29.83'
R. = 60.00'
P.C. = STA. 499+46.89
Y = 213,322.05
X = 504,224.50
P.T. = STA. 499+76.72
Y = 213,349.02
X = 504,236.51

ENGLISH HOLLOW ROAD CURVE & P.I. DATA

P.I. = STA. 202+58.36
Y = 213,366.90
X = 504,235.55
Δ. = 20°33'48"
D. = 15.29°
T. = 67.12'
L. = 132.79'
R. = 370.00'
P.C. = STA. 201+91.24
Y = 213,392.78
X = 504,173.62
P.T. = STA. 203+24.04
Y = 213,364.42
X = 504,302.62

PROJECT NO:5648-00-72	HWY:CTH D	COUNTY:LAFAYETTE	ALIGNMENT OVERVIEW (ENGLISH HOLLOW ROAD)	SHEET 33	E

DATE 06FEB13 E S T I M A T E O F Q U A N T I T I E S

LINE NUMBER	ITEM	ITEM DESCRIPTION	UNIT	TOTAL	5648-00-72 QUANTITY
0010	201.0105	CLEARING	STA	17.000	17.000
0020	201.0205	GRUBBING	STA	17.000	17.000
0030	203.0100	REMOVING SMALL PIPE CULVERTS	EACH	8.000	8.000
0040	203.0600.S	REMOVING OLD STRUCTURE OVER WATERWAY WITH MINIMAL DEBRIS (STATION) 01. 152+65, 64.4' RT.	LS	1.000	1.000
0050	205.0100	EXCAVATION COMMON	CY	63,567.000	63,567.000
0060	205.0200	EXCAVATION ROCK	CY	23,802.000	23,802.000
0070	206.1000	EXCAVATION FOR STRUCTURES BRIDGES (STRUCTURE) 01. B-33-123	LS	1.000	1.000
0080	210.0100	BACKFILL STRUCTURE	CY	530.000	530.000
0090	213.0100	FINISHING ROADWAY (PROJECT) 01. 5648-00-72	EACH	1.000	1.000
0100	305.0110	BASE AGGREGATE DENSE 3/4-INCH	TON	1,100.000	1,100.000
0110	305.0120	BASE AGGREGATE DENSE 1 1/4-INCH	TON	16,160.000	16,160.000
0120	310.0110	BASE AGGREGATE OPEN GRADED	TON	10.000	10.000
0130	311.0110	BREAKER RUN	TON	12,000.000	12,000.000
0140	415.0410	CONCRETE PAVEMENT APPROACH SLAB	SY	140.000	140.000
0150	440.4410.S	INCENTIVE IRI RIDE	DOL	4,000.000	4,000.000
0160	455.0105	ASPHALTIC MATERIAL PG58-28	TON	219.000	219.000
0170	455.0605	TACK COAT	GAL	398.000	398.000
0180	460.1100	HMA PAVEMENT TYPE E-0.3	TON	3,705.000	3,705.000
0190	460.2000	INCENTIVE DENSITY HMA PAVEMENT	DOL	2,370.000	2,370.000
0200	465.0120	ASPHALTIC SURFACE DRIVEWAYS AND FIELD ENTRANCES	TON	17.000	17.000
0210	465.0315	ASPHALTIC FLUMES	SY	10.000	10.000
0220	502.0100	CONCRETE MASONRY BRIDGES	CY	201.000	201.000
0230	502.3200	PROTECTIVE SURFACE TREATMENT	SY	330.000	330.000
0240	503.0146	PRESTRESSED GIRDER TYPE I 45W-INCH	LF	316.000	316.000
0250	504.0900	CONCRETE MASONRY ENDWALLS	CY	20.000	20.000
0260	505.0405	BAR STEEL REINFORCEMENT HS BRIDGES	LB	5,040.000	5,040.000
0270	505.0605	BAR STEEL REINFORCEMENT HS COATED BRIDGES	LB	21,990.000	21,990.000
0280	506.2605	BEARING PADS ELASTOMERIC NON-LAMINATED	EACH	8.000	8.000
0290	506.4000	STEEL DIAPHRAGMS (STRUCTURE) 01. B-33-123	EACH	3.000	3.000
0300	513.4060	RAILING TUBULAR TYPE M (STRUCTURE) 01. B-33-123	LS	1.000	1.000
0310	516.0500	RUBBERIZED MEMBRANE WATERPROOFING	SY	15.000	15.000
0320	520.0112	CULVERT PIPE CLASS III 12-INCH	LF	81.000	81.000
0330	520.0118	CULVERT PIPE CLASS III 18-INCH	LF	183.000	183.000
0340	520.0121	CULVERT PIPE CLASS III 21-INCH	LF	130.000	130.000
0350	520.0124	CULVERT PIPE CLASS III 24-INCH	LF	307.000	307.000
0360	520.0130	CULVERT PIPE CLASS III 30-INCH	LF	144.000	144.000
0370	520.0136	CULVERT PIPE CLASS III 36-INCH	LF	131.000	131.000
0380	520.0148	CULVERT PIPE CLASS III 48-INCH	LF	75.000	75.000
0390	520.1018	APRON ENDWALLS FOR CULVERT PIPE 18-INCH	EACH	6.000	6.000
0400	520.1021	APRON ENDWALLS FOR CULVERT PIPE 21-INCH	EACH	1.000	1.000
0410	520.1024	APRON ENDWALLS FOR CULVERT PIPE 24-INCH	EACH	10.000	10.000
0420	520.1030	APRON ENDWALLS FOR CULVERT PIPE 30-INCH	EACH	4.000	4.000
0430	520.1036	APRON ENDWALLS FOR CULVERT PIPE 36-INCH	EACH	3.000	3.000
0440	520.1048	APRON ENDWALLS FOR CULVERT PIPE 48-INCH	EACH	2.000	2.000
0450	521.1900	PIPE CATTLE PASS CORRUGATED STEEL	LF	150.000	150.000
0460	550.0020	PRE-BORING ROCK OR CONSOLIDATED MATERIALS	LF	69.000	69.000

3

DATE 06FEB13 E S T I M A T E O F Q U A N T I T I E S

LINE NUMBER	ITEM	ITEM DESCRIPTION	UNIT	TOTAL	5648-00-72 QUANTITY
0470	550.1100	PILING STEEL HP 10-INCH X 42 LB	LF	258.000	258.000
0480	601.0557	CONCRETE CURB AND GUTTER 6-INCH SLOPED 36-INCH TYPE D	LF	750.000	750.000
0490	602.1500	CONCRETE STEPS	SF	1,335.000	1,335.000
0500	606.0200	RIPRAP MEDIUM	CY	1,683.000	1,683.000
0510	606.0300	RIPRAP HEAVY	CY	350.000	350.000
0520	611.0627	INLET COVERS TYPE HM	EACH	3.000	3.000
0530	611.0642	INLET COVERS TYPE MS	EACH	5.000	5.000
0540	611.3230	INLETS 2X3-FT	EACH	3.000	3.000
0550	611.3901	INLETS MEDIAN 1 GRATE	EACH	3.000	3.000
0560	611.3902	INLETS MEDIAN 2 GRATE	EACH	1.000	1.000
0570	612.0106	PIPE UNDERDRAIN 6-INCH	LF	10.000	10.000
0580	612.0406	PIPE UNDERDRAIN WRAPPED 6-INCH	LF	140.000	140.000
0590	614.2300	MGS GUARDRAIL 3	LF	100.000	100.000
0600	614.2340	MGS GUARDRAIL 3 L	LF	70.000	70.000
0610	614.2500	MGS THRIE BEAM TRANSITION	LF	158.000	158.000
0620	614.2610	MGS GUARDRAIL TERMINAL EAT	EACH	4.000	4.000
0630	616.0700.S	FENCE SAFETY	LF	1,140.000	1,140.000
0640	619.1000	MOBILIZATION	EACH	1.000	1.000
0650	623.0200	DUST CONTROL SURFACE TREATMENT	SY	29,400.000	29,400.000
0660	625.0500	SALVAGED TOPSOIL	SY	38,500.000	38,500.000
0670	627.0200	MULCHING	SY	25,550.000	25,550.000
0680	628.1104	EROSION BALES	EACH	50.000	50.000
0690	628.1504	SILT FENCE	LF	6,900.000	6,900.000
0700	628.1520	SILT FENCE MAINTENANCE	LF	13,800.000	13,800.000
0710	628.1905	MOBILIZATIONS EROSION CONTROL	EACH	6.000	6.000
0720	628.1910	MOBILIZATIONS EMERGENCY EROSION CONTROL	EACH	3.000	3.000
0730	628.2004	EROSION MAT CLASS I TYPE B	SY	16,380.000	16,380.000
0740	628.2006	EROSION MAT URBAN CLASS I TYPE A	SY	1,220.000	1,220.000
0750	628.2023	EROSION MAT CLASS II TYPE B	SY	2,830.000	2,830.000
0760	628.7005	INLET PROTECTION TYPE A	EACH	7.000	7.000
0770	628.7010	INLET PROTECTION TYPE B	EACH	4.000	4.000
0780	628.7015	INLET PROTECTION TYPE C	EACH	3.000	3.000
0790	628.7504	TEMPORARY DITCH CHECKS	LF	176.000	176.000
0800	628.7555	CULVERT PIPE CHECKS	EACH	57.000	57.000
0810	628.7560	TRACKING PADS	EACH	3.000	3.000
0820	629.0210	FERTILIZER TYPE B	CWT	34.000	34.000
0830	630.0120	SEEDING MIXTURE NO. 20	LB	1,430.000	1,430.000
0840	630.0140	SEEDING MIXTURE NO. 40	LB	30.000	30.000
0850	630.0200	SEEDING TEMPORARY	LB	50.000	50.000
0860	631.1100	SOD EROSION CONTROL	SY	50.000	50.000
0870	633.0200	DELINEATORS FLEXIBLE	EACH	2.000	2.000
0880	633.5100	MARKERS ROW	EACH	81.000	81.000
0890	633.5200	MARKERS CULVERT END	EACH	22.000	22.000
0900	634.0612	POSTS WOOD 4X6-INCH X 12-FT	EACH	4.000	4.000
0910	634.0614	POSTS WOOD 4X6-INCH X 14-FT	EACH	7.000	7.000
0920	634.0616	POSTS WOOD 4X6-INCH X 16-FT	EACH	5.000	5.000
0930	637.0202	SIGNS REFLECTIVE TYPE II	SF	90.250	90.250
0940	638.2102	MOVING SIGNS TYPE II	EACH	5.000	5.000
0950	638.2602	REMOVING SIGNS TYPE II	EACH	17.000	17.000
0960	638.3000	REMOVING SMALL SIGN SUPPORTS	EACH	15.000	15.000
0970	642.5001	FIELD OFFICE TYPE B	EACH	1.000	1.000
0980	643.0100	TRAFFIC CONTROL (PROJECT) 01. 5648-00-72	EACH	1.000	1.000
0990	643.0420	TRAFFIC CONTROL BARRICADES TYPE III	DAY	3,200.000	3,200.000

3

DATE 06FEB13 E S T I M A T E O F Q U A N T I T I E S

LINE NUMBER	ITEM	ITEM DESCRIPTION	UNIT	TOTAL	5648-00-72 QUANTITY
1000	643.0705	TRAFFIC CONTROL WARNING LIGHTS TYPE A	DAY	6,400.000	6,400.000
1010	643.0900	TRAFFIC CONTROL SIGNS	DAY	3,840.000	3,840.000
1020	645.0111	GEOTEXTILE FABRIC TYPE DF SCHEDULE A	SY	20.000	20.000
1030	645.0120	GEOTEXTILE FABRIC TYPE HR	SY	5,227.000	5,227.000
1040	645.0140	GEOTEXTILE FABRIC TYPE SAS	SY	1,400.000	1,400.000
1050	646.0103	PAVEMENT MARKING PAINT 4-INCH	LF	22,100.000	22,100.000
1060	650.4000	CONSTRUCTION STAKING STORM SEWER	EACH	7.000	7.000
1070	650.4500	CONSTRUCTION STAKING SUBGRADE	LF	5,913.000	5,913.000
1080	650.5000	CONSTRUCTION STAKING BASE	LF	5,913.000	5,913.000
1090	650.5500	CONSTRUCTION STAKING CURB GUTTER AND CURB & GUTTER	LF	750.000	750.000
1100	650.6000	CONSTRUCTION STAKING PIPE CULVERTS	EACH	15.000	15.000
1110	650.6500	CONSTRUCTION STAKING STRUCTURE LAYOUT (STRUCTURE) 01. B-33-123	LS	1.000	1.000
1120	650.7000	CONSTRUCTION STAKING CONCRETE PAVEMENT	LF	40.000	40.000
1130	650.9910	CONSTRUCTION STAKING SUPPLEMENTAL CONTROL (PROJECT) 01. 5648-00-72	LS	1.000	1.000
1140	650.9920	CONSTRUCTION STAKING SLOPE STAKES	LF	5,913.000	5,913.000
1150	690.0150	SAWING ASPHALT	LF	81.000	81.000
1160	715.0415	INCENTIVE STRENGTH CONCRETE PAVEMENT	DOL	4,200.000	4,200.000
1170	715.0502	INCENTIVE STRENGTH CONCRETE STRUCTURES	DOL	1,206.000	1,206.000
1180	ASP.1T0A	ON-THE-JOB TRAINING APPRENTICE AT $5. 00/HR	HRS	500.000	500.000
1190	ASP.1T0G	ON-THE-JOB TRAINING GRADUATE AT $5.00/HR	HRS	450.000	450.000
1200	SPV.0060	SPECIAL 01. PRECAST CONCRETE CATTLEGUARD	EACH	1.000	1.000
1210	SPV.0090	SPECIAL 01. SALVAGED CUT STONE RIPRAP	LF	320.000	320.000

3

3

3

CLEARING & GRUBBING

CATEGORY	STATION	TO STATION	LOCATION	(201.0105) CLEARING STA	(201.0205) GRUBBING STA
010	111+00	114+00	RT	3	3
	115+00	116+00	LT & RT	1	1
	116+00	117+00	LT	1	1
	120+00	121+00	RT	1	1
	128+00	133+00	LT	5	5
	134+00	135+00	LT	1	1
	149+00	153+00	LT & RT	4	4
	201+00	202+00	LT & RT	1	1
		PROJECT TOTALS		**17**	**17**

REMOVING SMALL PIPE CULVERTS

CATEGORY	STATION	LOCATION	TYPE	DIAMETER	LENGTH	(203.0100) EACH
010	116+95	LT	CMP	18"	30'	1
	118+38	CL	CMP	36"	40'	1
	133+45	CL	CMP	30"	65'	1
	136+55	RT	CMP	18"	35'	1
	139+74	RT	CMP	15"	38'	1
	145+07	CL	CMP	16"	31'	1
	202+38	CL	CMP	48"	52'	1
	499+58	CL	CMP	15"	36'	1
				PROJECT TOTAL		**8**

BASE AGGREGATE DENSE AND BREAKER RUN

CATEGORY	STATION	TO STATION	LOCATION	(305.0110) 3/4-INCH TON	(305.0120) 1 1/4-INCH TON	(311.0110) BREAKER RUN TON
010	107+50	152+41	LT & RT	820	10,780	8,320
	153+22	163+05	LT & RT	215	2,320	1,950
	200+26	204+00	LT & RT	65	830	730
		PE'S & FE'S		-	230	-
		UNDISTRIBUTED		-	2,000	1,000
		PROJECT TOTALS		**1,100**	**16,160**	**12,000**

3

CONCRETE PAVEMENT APPROACH SLAB

CATEGORY	STATION	(415.0410) CONCRETE PAVEMENT APPROACH SLAB SY	(650.7000) CONSTRUCTION STAKING CONCRETE PAVEMENT LF
010	152+41	70	20
	153+22	70	20
	PROJECT TOTALS	**140**	**40**

HMA PAVEMENT ITEMS

CATEGORY	STATION	TO STATION	LOCATION	(455.0105) ASPHALTIC MATERIAL PG58-28 TON	(455.0605) TACK COAT GAL	(460.1100) HMA PAVEMENT TYPE E-0.3 TON	(465.0120) ASPHALTIC SURFACE DRIVEWAYS AND FIELD ENTRANCES TON
010	107+50	152+41	RT & LT	170	305	2,840	-
	153+22	163+05	RT & LT	35	68	630	-
	200+26	204+00	RT & LT	14	25	235	-
	123+00	-	PE LT	-	-	-	17
		PROJECT TOTALS		**219**	**398**	**3,705**	**17**

ASPHALTIC FLUMES

CATEGORY	STATION	LOCATION	(465.0315) SY
010	119+80	LT	5
	127+30	LT	5
		PROJECT TOTAL	**10**

PRECAST CONCRETE CATTLEGUARD

CATEGORY	STATION	LOCATION	(SPV.0060.01) EACH
010	499+30	CL	1
		PROJECT TOTAL	**1**

CONCRETE MASONRY ENDWALL

CATEGORY	STATION	LOCATION	(504.0900) CY
010	137+50	LT	5
	137+50	RT	5
	151+58	LT	5
	152+04	RT	5
		PROJECT TOTAL	**20**

PIPE CATTLE PASS CORRUGATED STEEL

CATEGORY	STATION	LOCATION	(521.1900) LF
010	137+50	CL	56
	151+75	CL	94
		PROJECT TOTAL	**150**

CONCRETE CURB AND GUTTER 6-INCH SLOPED 36-INCH TYPE D

CATEGORY	STATION	TO STATION	LOCATION	(601.0557) LF	(650.5500) CONSTRUCTION STAKING CURB GUTTER AND CURB & GUTTER LF
010	119+80	127+30	LT	750	750
		PROJECT TOTALS		**750**	**750**

CONCRETE STEPS

CATEGORY	STATION	LOCATION	(602.1500) SF
010	137+50	LT	435
	151+75	LT	900
		PROJECT TOTAL	**1,335**

DELINEATORS FLEXIBLE

CATEGORY	STATION	LOCATION	(633.0200) EACH
010	119+80	LT	1
	127+30	LT	1
		PROJECT TOTAL	**2**

EARTHWORK PROJECT I.D. 5648-00-72

Division	From / To Station	Location	Common Excavation (1) Cut (2)	Common Excavation (1) (item # 205.0100) EBS Excavation (3)	Salvaged / Unusable Pavement Material (4)	Available Material (5)	Rock Excavation (7) (item #205.0200)	Expanded Rock (12) Factor 1.10	Unexpanded Fill	Expanded Fill (13) Factor 1.25	Mass Ordinate + / - (14)	Waste	Comment:
1	107+50 - 152+42	CTH D	52130	0	0	75932	23802	26182	13601	17001	61311	61311	
	Structure B-33-123		0	0	0	0	0	0	0	0	0	0	
2	153+20 - 163+05	CTH D	2366	0	0	2366	0	0	17727	22158	-19792	-19792	
3	200+00 - 204+00	ENGLISH HOLLOW ROAD	715	0	0	715	0	0	1537	-1207	-1207	-1207	
		P.E. Sta 117+00, LT	50	0	0	50	0	0	170	213	-163	-163	
		P.E. Sta. 202+65, RT	15	0	0	15	0	0	125	156	-141	-141	
		Field Entrances	0	0	0	0	0	0	20	25	-25	-25	
		UNDISTRIBUTED EBS	0	8291									
Subtotal			55276	8291									
Grand Total			63567		0	79078	23802	26182	33180	38347	39983	39983	

1) Common Excavation is the sum of the Cut and EBS Excavation columns. Item number 205.0100
2) Salvaged/Unsuable Pavement Material is included in Cut.
3) EBS Excavation and Breaker Run Fill Found Elsewhere.
4) Salvaged/Unusable Pavement Material
5) Available Material = Cut - Salvaged/Unusuable Pavement Material
7) Rock Excavation item number 205.0200
12) Expanded Rock - Factor = 1.1.
13) Expanded Fill. Factor = 1.25
14) The Mass Ordinate + or - Qty calculated for the Division. Plus quantity indicates an excess of material within the Division. Minus indicates a shortage of material within the Division.

3

CULVERT PIPE AND APRON ENDWALLS FOR CULVERT PIPE

CATEGORY	STATION	LOCATION	(520.0118) CLASS III 18-INCH LF	(520.0121) CLASS III 21-INCH LF	* (520.0124) CLASS III 24-INCH LF	(520.0130) CLASS III 30-INCH LF	(520.0136) CLASS III 36-INCH LF	(520.0148) CLASS III 48-INCH LF	THICKNESS STEEL IN	THICKNESS ALUM IN	(520.1018) APRON ENDWALLS FOR CULVERT PIPE 18-INCH EACH	(520.1021) 21-INCH EACH	* (520.1024) 24-INCH EACH	(520.1030) 30-INCH EACH	(520.1036) 36-INCH EACH	(520.1048) 48-INCH EACH
010	112+54	LT	-	-	44	-	-	-	0.064	0.075	-	-	2	-	-	-
	116+14	CL	-	-	-	-	65	-	0.079	0.105	-	-	-	-	1	-
	116+14	LT	3	-	-	-	-	-	0.064	0.060	-	-	-	-	-	-
	116+93	LT	-	-	60	-	-	-	0.064	0.075	-	-	2	-	-	-
	118+39	CL	-	-	-	-	66	-	0.079	0.105	-	-	-	-	2	-
	133+41	CL	-	-	-	84	-	-	0.079	0.075	-	-	-	2	-	-
	136+59	CL	-	-	-	60	-	-	0.079	0.075	-	-	-	2	-	-
	139+70	CL	-	-	56	-	-	-	0.064	0.075	-	-	2	-	-	-
	145+07	CL	-	-	54	-	-	-	0.064	0.075	-	-	2	-	-	-
	151+81	CL	-	130	-	-	-	-	0.064	0.075	-	1	-	-	-	-
	157+50	RT	68	-	-	-	-	-	0.064	0.060	2	-	-	-	-	-
	161+61	RT	58	-	-	-	-	-	0.064	0.060	2	-	-	-	-	-
	202+38	CL	-	-	-	-	-	75	0.109	0.105	-	-	-	-	-	2
	499+59	CL	54	-	-	-	-	-	0.064	0.060	2	-	-	-	-	-
	PROJECT TOTALS		**183**	**130**	**214**	**144**	**131**	**75**			**6**	**1**	**8**	**4**	**3**	**2**

*ADDITIONAL QUANTITIES FOUND ELSEWHERE

CULVERT PIPE AND STORM SEWER STRUCTURES

CATEGORY	STRUCTURE NO.	STATION	LOCATION	(520.0112) CULVERT PIPE CLASS III 12-INCH LF	* (520.0124) CULVERT PIPE CLASS III 24-INCH LF	* (520.1024) APRON ENDWALLS FOR CULVERT PIPE 24-INCH EACH	(611.3230) INLETS 2X3 EACH	(611.3901) INLETS MEDIAN 1 GRATE SINGLE SLOPE EACH	(611.3902) INLETS MEDIAN 2 GRATE SINGLE SLOPE EACH	(611.0627) INLET COVERS TYPE HM EACH	(611.0642) INLET COVERS TYPE MS EACH	(650.4000) CONSTRUCTION STAKING STORM SEWER EACH
010	1.1	116+13.83	33.95' LT	-	-	-	-	-	1	-	2	1
	2.1	122+75.86	44.57' LT	37	-	-	-	1	-	-	1	1
	2.2	123+12.67	44.57' LT	34	-	-	-	1	-	-	1	1
	2.3	123+31.13	15.50' LT	-	46	-	1	-	-	1	-	1
	EW.2	123+31.13	26.26' RT	-	-	1	-	-	-	-	-	-
	3.1	127+00.00	15.50' LT	10	-	-	1	-	-	1	-	1
	3.2	127+10.00	15.50' LT	-	47	-	1	-	-	1	-	1
	EW.3	127+10.00	31.50' RT	-	-	1	-	-	-	-	-	-
	4.1	151+18.00	42.50' LT	-	-	-	-	1	-	-	1	1
		PROJECT TOTALS		**81**	**93**	**2**	**3**	**3**	**1**	**3**	**5**	**7**

*ADDITIONAL QUANTITIES FOUND ELSEWHERE

CONSTRUCTION STAKING PIPE CULVERTS

CATEGORY	STATION	LOCATION	(650.6000) EACH
010	112+54	LT	1
	116+14	CL	1
	116+93	LT	1
	118+39	CL	1
	123+31	RT	1
	127+10	RT	1
	133+41	CL	1
	136+59	CL	1
	139+70	CL	1
	145+07	CL	1
	151+87	LT	1
	157+50	RT	1
	161+61	RT	1
	202+38	CL	1
	499+59	CL	1
	PROJECT TOTAL		**15**

MARKERS CULVERT END

CATEGORY	STATION	LOCATION	(633.5200) EACH
010	116+14	LT & RT	2
	118+39	LT & RT	2
	123+31	RT	1
	127+10	RT	1
	133+41	LT & RT	2
	136+00	RT	1
	136+59	LT & RT	2
	137+50	LT & RT	2
	139+75	LT & RT	2
	145+07	LT & RT	2
	151+20	LT	1
	151+50	LT	1
	152+00	RT	1
	202+38	LT & RT	2
	PROJECT TOTALS		**22**

STEEL PLATE BEAM GUARD

CATEGORY	STATION	TO STATION	LOCATION	(614.2300) MGS GUARDRAIL 3 LF	(614.2340) MGS GUARDRAIL 3 L LF	(614.2500) MGS THRIE BEAM TRANSITION LF	(614.2610) MGS GUARDRAIL TERMINAL EAT EACH
010	150+63	151+15	LT	-	-	39.5	-
	151+88	152+09	LT	25	-	-	-
	151+15	151+88	LT	-	70	-	-
	151+35	151+88	LT	-	-	-	1
	152+02	152+42	RT	-	-	39.5	-
	151+81	152+02	RT	25	-	-	-
	151+28	151+81	RT	-	-	-	1
	153+24	153+63	RT	-	-	39.5	-
	153+63	153+84	RT	25	-	-	-
	153+84	154+37	RT	-	-	-	1
	153+13	153+52	LT	-	-	39.5	-
	153+52	153+73	LT	25	-	-	-
	153+73	154+26	LT	-	-	-	1
	PROJECT TOTALS			**100**	**70**	**158**	**4**

3

FINISHING ITEMS

CATEGORY	STATION	TO STATION	LOCATION	(625.0500) SALVAGED TOPSOIL SY	(627.0200) MULCHING SY	(629.0210) FERTILIZER TYPE B CWT	(630.0120) SEEDING MIXTURE NO. 20 LB	(630.0140) SEEDING MIXTURE NO. 40 LB	(630.0200) SEEDING TEMPORARY LB	(628.2004) EROSION MAT CLASS I TYPE B SY	(628.2006) EROSION MAT URBAN CLASS I TYPE A SY	(628.2023) EROSION MAT CLASS II TYPE B SY
0010	107+50	112+50	LT	680	290	0.8	35	0	-	630	0	0
	107+50	112+50	RT	1,470	260	1.3	55	0	-	1,470	0	0
	112+50	117+00	LT	1,060	780	1.0	45	0	-	510	0	0
	112+50	117+00	RT	1,460	260	1.3	60	0	-	1,430	0	0
	117+00	123+00	LT	1,040	320	1.0	25	15	-	540	540	0
	117+00	123+00	RT	1,540	1,830	1.5	65	0	-	85	0	0
	123+00	127+50	LT	670	200	0.6	0	15	-	0	630	0
	123+00	127+50	RT	1,080	1,310	1.1	45	0	-	0	0	0
	127+50	134+50	LT	2,680	340	2.3	100	0	-	2,760	0	0
	127+50	134+50	RT	2,000	2,460	2.0	85	0	-	0	0	0
	134+50	140+50	LT	3,360	370	2.6	115	0	-	3,420	0	0
	134+50	140+50	RT	2,300	2,700	2.1	85	0	-	0	0	0
	140+50	147+50	LT	3,090	390	2.5	110	0	-	3,150	0	0
	140+50	147+50	RT	3,070	3,460	2.5	110	0	-	0	0	0
	147+50	152+50	LT	3,020	330	2.4	100	0	-	410	0	2,730
	147+50	152+50	RT	3,460	3,620	2.8	120	0	-	130	0	0
	152+50	157+50	LT	1,850	2,050	1.5	70	0	-	30	0	0
	152+50	157+50	RT	2,120	2,330	1.7	75	0	-	85	0	0
	157+50	163+05	LT	760	1,070	1.0	45	0	-	0	0	0
	157+50	163+05	RT	750	420	0.9	40	0	-	620	0	0
	201+50	204+00	LT	470	200	0.6	20	0	-	390	0	0
	201+50	204+00	RT	570	560	0.6	25	0	-	220	0	0
		UNDISTRIBUTED		-	-	-	-	-	50	500	50	100
		PROJECT TOTALS		**38,500**	**25,550**	**34.0**	**1,430**	**30**	**50**	**16,380**	**1,220**	**2,830**

RIPRAP AND GEOTEXTILE FABRIC

CATEGORY	STATION	LOCATION	(606.0200) RIPRAP MEDIUM CY	(645.0120) GEOTEXTILE FABRIC TYPE HR SY	(645.0140) GEOTEXTILE FABRIC TYPE SAS SY
010	107+50 - 113+00	RT	370	920	-
	107+50 - 112+40	LT	300	760	-
	112+61 - 114+00	LT	100	250	-
	116+13	LT & RT	17	51	-
	166+55	LT	6	19	-
	117+26	LT	10	25	-
	117+60	LT	6	19	-
	118+25	LT	7	19	-
	118+60	RT	11	27	-
	119+80	LT	6	18	-
	123+30	RT	13	31	-
	125+85 - 126+90	RT	70	175	-
	127+10	RT	10	28	-
	127+30	LT	17	48	-
	133+40	LT	5	13	-
	133+00 - 134+00	RT	64	185	-
	136+10	LT & RT	9	42	-
	139+75	LT & RT	16	50	-
	145+08	LT & RT	20	61	-
	151+00 - 151+50	LT	29	71	-
	157+10	RT	6	21	-
	157+00 - 163+00	LT	290	875	-
	157+85 - 161+30	RT	225	610	-
	161+85 - 163+05	RT	76	200	-
	UNDISTRIBUTED		-	-	1,400
	PROJECT TOTALS		**1,683**	**4,517**	**1,400**

SPRING BOX ITEMS

CATEGORY	STATION	LOCATION	(310.0110) BASE AGGREGATE OPEN GRADED TON	(612.0106) PIPE UNDERDRAIN 6-INCH LF	(645.0111) GEOTEXTILE FABRIC TYPE DF SCHEDULE A SY
010	136+00	RT	10	10	20
	PROJECT TOTALS		**10**	**10**	**20**

MOBILIZATION EROSION CONTROL

CATEGORY	DESCRIPTION	(628.1905) EACH	(628.1910) EMERGENCY EACH
010	PROJECT 5648-00-72	6	3
	PROJECT TOTALS	**6**	**3**

SOD EROSION CONTROL

CATEGORY	LOCATION	(631.1100) SY
0010	UNDISTRIBUTED	50
	PROJECT TOTAL	**50**

FENCE SAFETY

CATEGORY	STATION	TO STATION	LOCATION	(616.0700.S) LF
010	121+00	122+00	RT	100
	124+37	132+87	LT	835
	135+55	135+85	RT	30
	153+54	155+16	RT	175
		PROJECT TOTAL		**1,140**

DUST CONTROL SURFACE TREATMENT

CATEGORY	DESCRIPTION	(623.0200) SY
010	PROJECT 5648-00-72	29,400
	PROJECT TOTALS	**29,400**

TRACKING PADS

CATEGORY	LOCATION	(628.7560) EACH
0010	BEGIN PROJECT	1
	END PROJECT	1
	ENGLISH HOLLOW ROAD	1
	PROJECT TOTAL	**3**

EROSION BALES

CATEGORY	LOCATION	(628.1104) EACH
0010	UNDISTRIBUTED	50
	PROJECT TOTAL	**50**

INLET PROTECTION

CATEGORY	STATION	LOCATION	(628.7005) TYPE A EACH	(628.7010) TYPE B EACH	(628.7015) TYPE C EACH
010	116+14	32' LT	1	1	-
	122+76	44.5' LT	1	1	-
	123+17	44.5' LT	1	1	-
	123+31	15.5' LT	1	-	1
	127+00	15.5' LT	1	-	1
	127+10	15.5' LT	1	-	1
	151+18	42.5' LT	1	1	-
	PROJECT TOTALS		**7**	**4**	**3**

3

SILT FENCE

CATEGORY	STATION	TO STATION	LOCATION	(628.1504) LF	(628.1520) MAINTENANCE LF
010	109+50	112+47	LT	315	630
	112+68	114+32	LT	180	360
	117+00	119+26	RT	245	490
	119+53	126+00	RT	685	1,370
	126+92	130+70	RT	440	880
	130+96	133+18	RT	265	530
	133+28	133+84	RT	60	120
	133+98	134+39	RT	105	210
	134+66	150+43	RT	1,695	3,390
	151+52	152+44	RT	145	290
	152+11	152+52	LT/RT	180	360
	152+60	156+50	RT	460	920
	152+89	163+05	RT/LT	1,100	2,200
	156+82	157+38	RT	55	110
	160+00	161+49	RT	145	290
	161+74	163+05	RT	130	260
	201+20	202+28	RT	165	330
	201+74	202+46	LT	65	130
	202+50	204+03	RT	205	410
	202+69	204+00	LT	125	250
		UNDISTRIBUTED		135	270
		PROJECT TOTALS		**6,900**	**13,800**

TRAFFIC CONTROL

CATEGORY	STAGE	STATION	BARRICADES TYPE III NO. DEVICES	(643.0420) BARRICADES TYPE III DAYS	WARNING LIGHTS TYPE A NO. DEVICES	(643.0705) WARNING LIGHTS TYPE A DAYS	SIGNS NO. DEVICES	(643.0900) SIGNS DAYS	DURATION
010	TOTAL PROJECT		40	3200	80	6400	48	3840	80
	PROJECT TOTAL		**40**	**3,200**	**80**	**6,400**	**48**	**3,840**	**80**

PAVEMENT MARKING PAINT 4-INCH

CATEGORY	STATION	TO STATION	LOCATION	(646.0103) YELLOW LF	(646.0103) WHITE LF	NOTES
010	107+50	163+05	LT & RT	-	10,990	EDGELINE
	107+50	163+05	CL	11,110	-	SOLID CENTERLINE (DOUBLE YELLOW)
		PROJECT TOTALS		**22,100**		

TEMPORARY DITCH CHECKS

CATEGORY	STATION	LOCATION	(628.7504) LF
010	114+00	RT	8
	115+00	RT	8
	115+00	LT	8
	116+35	RT	8
	117+00	RT	8
	119+00	LT	8
	129+00	LT	8
	130+00	LT	8
	131+50	LT	8
	133+00	LT	8
	138+50	LT	8
	143+50	LT	8
	146+00	LT	8
	148+00	LT	8
	149+75	LT	8
	154+30	LT	8
	156+50	RT	8
	UNDISTRIBUTED		40
	PROJECT TOTAL		**176**

CULVERT PIPE CHECKS

CATEGORY	STATION	LOCATION	(628.7555) EACH
010	112+30	LT	5
	116+60	LT	8
	118+20	LT	8
	133+45	LT	7
	136+60	LT	7
	139+70	LT	5
	145+10	LT	5
	157+90	RT	4
	161+90	RT	4
	202+87	RT	4
	PROJECT TOTAL		**57**

MOVING SIGNS TYPE II

CATEGORY	STATION	LOCATION	(638.2102) EACH	* (634.0614) POSTS WOOD 4x6-INCH 14-FT EACH
010	116+81	LT	1	-
	121+67	LT	2	-
	161+67	LT	1	2
	202+38	RT	1	-
	PROJECT TOTAL		**5**	**2**

*ADDITIONAL QUANTITIES FOUND ELSEWHERE

REMOVING SIGNS TYPE II

CATEGORY	STATION	LOCATION	(638.2602) EACH	(638.3000) REMOVING SMALL SIGN SUPPORTS EACH
010	142+34	RT	2	1
	143+61	RT	1	1
	144+80	LT	2	1
	146+17	RT	1	1
	147+55	RT	1	1
	152+44	RT	1	1
	152+46	RT	1	1
	152+83	RT	1	1
	152+88	RT	1	1
	156+30	LT	1	1
	156+66	LT	1	1
	157+30	LT	1	1
	159+17	LT	1	1
	201+13	LT	1	1
	201+24	RT	1	1
	PROJECT TOTALS		**17**	**15**

PERMANENT SIGNING

CATEGORY	SIGN CODE	SIGN SIZE	STATION	LOCATION	(637.0202) SIGNS REFLECTIVE TYPE II SF	(634.0612) POSTS WOOD 4x6-INCH 12-FT EACH	* (634.0614) POSTS WOOD 4x6-INCH 14-FT EACH	(634.0616) POSTS WOOD 4x6-INCH 16-FT EACH
010	W1-2L	30"x30"	141+24	RT	6.25	-	-	1
	W13-1	18"x18"	141+24	RT	2.25	-	-	-
	W1-5R	30"x30"	144+50	LT	6.25	-	-	1
	W13-1	18"x18"	144+50	LT	2.25	-	-	-
	W2-2	30"x30"	146+00	RT	6.25	-	1	-
	W1-7	48"x24"	151+20	LT	8.00	-	1	-
	W5-52R	12"x36"	152+44	RT	3.00	1	-	-
	W5-52L	12"x36"	152+46	LT	3.00	1	-	-
	W5-52R	12"x36"	153+24	LT	3.00	1	-	-
	W5-52L	12"x36"	153+18	RT	3.00	1	-	-
	W2-2	30"x30"	156+00	LT	6.25	-	1	-
	J1-2	48"x39"	158+50	RT	13.00	-	-	1
	M1-5A	24"x24"	162+00	LT	4.00	-	1	-
	W1-5R	30"x30"	164+50	LT	6.25	-	-	1
	W13-1	18"x18"	164+50	LT	2.25	-	-	-
	R1-1	30"x30"	200+41	LT	6.25	-	1	-
	W3-1	36"x36"	205+50	RT	9.00	-	-	1
		PROJECT TOTALS			**90.25**	**4**	**5**	**5**

*ADDITIONAL QUANTITIES FOUND ELSEWHERE

3

3

MARKERS ROW

CATEGORY	R/W PT	STATION	LOCATION	(633.5100) EACH
010	100	107+50	35.15' LT	1
	101	107+50	45.00' LT	1
	102	109+50	45.00' LT	1
	103	111+00	58.00' LT	1
	104	111+98	56.31' LT	1
	105	113+90	67.73' LT	1
	106	113+97	66.98' LT	1
	107	114+06	66.77' LT	1
	108	114+83	51.64' LT	1
	109	115+50	53.00' LT	1
	111	117+13	36.60' LT	1
	112	118+40	56.72' LT	1
	113	119+50	50.00' LT	1
	114	119+80	36.10' LT	1
	122	126+05	35.30' LT	1
	123	128+00	47.61' LT	1
	124	129+29	74.08' LT	1
	125	132+00	72.00' LT	1
	126	133+74	54.97' LT	1
	127	134+37	72.91' LT	1
	128	134+81	88.15' LT	1
	129	135+74	90.50' LT	1
	130	136+50	65.00' LT	1
	131	137+00	65.00' LT	1
	132	137+50	134.00' LT	1
	133	138+50	81.20' LT	1
	134	146+00	77.00' LT	1
	135	147+50	90.00' LT	1
	136	149+16	118.08' LT	1
	137	151+03	122.87' LT	1
	138	152+10	58.88' LT	1
	139	155+24	64.85' LT	1
	140	155+50	71.39' LT	1
	141	156+00	65.26' LT	1
	142	157+90	74.32' LT	1
	143	160+80	38.60' LT	1
	144	160+80	48.00' LT	1
	145	162+10	42.13' LT	1
	146	163+05	33.06' RT	1
	147	163+05	52.00' RT	1
	148	161+91	52.40' RT	1
	149	160+00	38.00' RT	1
	150	158+50	70.00' RT	1
	151	157+00	55.00' RT	1
	152	154+50	85.00' RT	1
	153	153+50	74.44' RT	1
	154	153+33	79.11' RT	1
	155	152+90	102.76' RT	1
	156	152+41	114.04' RT	1
	157	151+52	176.62' RT	1
	158	151+58	286.32' RT	1
	159	151+54	325.73' RT	1
	160	151+11	346.04' RT	1
	161	150+42	124.08' RT	1
	162	147+74	54.07' RT	1
	163	145+50	85.00' RT	1
	164	144+00	75.00' RT	1
	165	143+50	50.00' RT	1
	166	142+50	50.00' RT	1
	167	142+49	43.62' RT	1

CONTINUED

MARKERS ROW CONT.

CATEGORY	R/W PT	STATION	LOCATION	(633.5100) EACH
010	168	140+82	44.87' RT	1
	169	139+56	60.73' RT	1
	170	137+45	93.18' RT	1
	171	135+95	85.04' RT	1
	172	135+16	68.08' RT	1
	173	134+25	48.43' RT	1
	174	133+50	85.00' RT	1
	175	132+51	46.87' RT	1
	176	130+22	61.21' RT	1
	177	129+00	65.00' RT	1
	178	127+50	62.00' RT	1
	179	126+50	62.00' RT	1
	180	124+00	40.00' RT	1
	181	123+50	59.91' RT	1
	182	117+50	45.00' RT	1
	183	115+45	59.26' RT	1
	184	114+00	75.00' RT	1
	185	113+00	65.00' RT	1
	186	110+66	81.09 RT	1
	187	107+50	50.00' RT	1
	188	107+50	30.85' RT	1
		PROJECT TOTAL		**81**

CONSTRUCTION STAKING

CATEGORY	STATION	TO STATION	LOCATION	(650.4500) SUBGRADE LF	(650.5000) BASE LF	(650.6500) STRUCTURE LAYOUT LS	(650.9910) SUPPLEMENTAL CONTROL LS	(650.9920) SLOPE STAKING LF
010	107+50	152+41	LT & RT	4,491	4,491	-	-	4,491
	153+22	163+05	LT & RT	983	983	-	-	983
	200+75	204+00	LT & RT	325	325	-	-	325
	300+40	301+00	LT & RT	60	60	-	-	60
	498+96	499+50	LT & RT	54	54	-	-	54
	PROJECT 5648-00-72		LT & RT	-	-	-	1	-
	CATEGORY 010 SUBTOTALS			**5,913**	**5,913**	**0**	**1**	**5,913**
020	STRUCTURE B-33-123		-	-	-	1	-	-
	CATEGORY 020 SUBTOTALS			**0**	**0**	**1**	**0**	**0**
	PROJECT TOTALS			**5,913**	**5,913**	**1**	**1**	**5,913**

SAWING ASPHALT

CATEGORY	STATION	LOCATION	(690.0150) LF
010	107+50	LT & RT	20
	122+93	LT	13
	163+05	LT & RT	27
	204+00	LT & RT	21
	PROJECT TOTAL		**81**

R/W PROJECT NUMBER	SHEET NUMBER	TOTAL SHEETS
5648-00-01	4.1	6
FEDERAL PROJECT NUMBER		

PLAT OF RIGHT-OF-WAY REQUIRED FOR

CTH F-IOWA COUNTY LINE

(CANNON ROAD TO CTH S)

CTH D — LAFAYETTE CO.

CONSTRUCTION PROJECT NUMBER
5648-00-72

CONVENTIONAL ABBREVIATIONS

ACCESS POINT/ DRIVEWAY CONNECTION	AP	REFERENCE LINE	R/L
ACCESS RIGHTS	AR	RELEASE OF RIGHTS	ROR
ACRES	AC.	REMAINING	REM.
AND OTHERS	ET.AL.	RIGHT-OF-WAY	R/W
CENTERLINE	C/L	SECTION	SEC.
CERTIFIED SURVEY MAP	CSM	STATION	STA.
CORNER	COR.	TEMPORARY LIMITED EASEMENT	T.L.E
DOCUMENT	DOC.	VOLUME	V.
EASEMENT	EASE.	**CURVE DATA**	
HIGHWAY EASEMENT	H.E.	LONG CHORD	LC
LAND CONTRACT	LC	RADIUS	R
MONUMENT	MON.	DEGREE OF CURVE	D
PAGE	P.	CENTRAL ANGLE OR DELTA	DELTA
PERMANENT LIMITED EASEMENT	PLE	LENGTH OF CURVE	L
PROPERTY LINE	PL	TANGENT	TAN
RECORDED AS	(100')		

CONVENTIONAL SYMBOLS

FOUND IRON PIPE/PIN	I.P. (1" UNLESS NOTED)	PROPOSED R/W LINE	
		EXISTING H.E. LINE	
R/W MONUMENT	•(SET)	PROPERTY LINE	
R/W STANDARD	△(SET)	LOT & TIE LINES	
SIGN	SIGN	SLOPE INTERCEPTS	
SECTION CORNER MONUMENT		CORPORATE LIMITS	
SECTION CORNER SYMBOL	1/4 1/4 1/4 1/4	NO ACCESS (BY PREVIOUS ACQUISITION/CONTROL)	
FEE (HATCH VARIES)		NO ACCESS (BY ACQUISITION)	
TEMPORARY LIMITED EASEMENT		NO ACCESS (BY STATUTORY AUTHORITY)	
PERMANENT LIMITED EASEMENT		SECTION LINE	
R/W BOUNDARY POINT	HWB20	QUARTER LINE	
PARCEL NUMBER	102	SIXTEENTH LINE	
UTILITY PARCEL NUMBER	32	EXISTING CENTERLINE	
SIGN NUMBER (OFF PREMISE)	21-1	PROPOSED REFERENCE LINE	
BUILDING		PARALLEL OFFSET	

CONVENTIONAL UTILITY SYMBOLS

WATER	W	
GAS	G	
TELEPHONE	T	
OVERHEAD TRANSMISSION LINES	OH	
ELECTRIC	E	
CABLE TELEVISION	TV	
FIBER OPTIC	FO	
SANITARY SEWER	SAN	
STORM SEWER	SS	
	NON COMPENSABLE	COMPENSABLE
POWER POLE		
TELEPHONE POLE		
TELEPHONE PEDESTAL		
ELECTRIC TOWER		

BEGIN RELOCATION
ORDER STA.107+50.00
Y = 210430.55
X = 501192.56
APPROXIMATELY 1,205 FEET EAST OF AND 999 FEET NORTH OF THE SOUTHWEST CORNER OF SECTION 20, T-4-N, R-4-E, TOWN OF FAYETTE, LAFAYETTE COUNTY, WI.

END RELOCATION
ORDER STA.163+05.00
Y = 214642.08
X = 503963.79
APPROXIMATELY 1,304 FEET EAST OF AND 71 FEET SOUTH OF THE NORTH QUARTER CORNER OF SECTION 20, T-4-N, R-4-E, TOWN OF FAYETTE, LAFAYETTE COUNTY, WI.

IOWA COUNTY
LAFAYETTE COUNTY

IOWA COUNTY
LAFAYETTE COUNTY

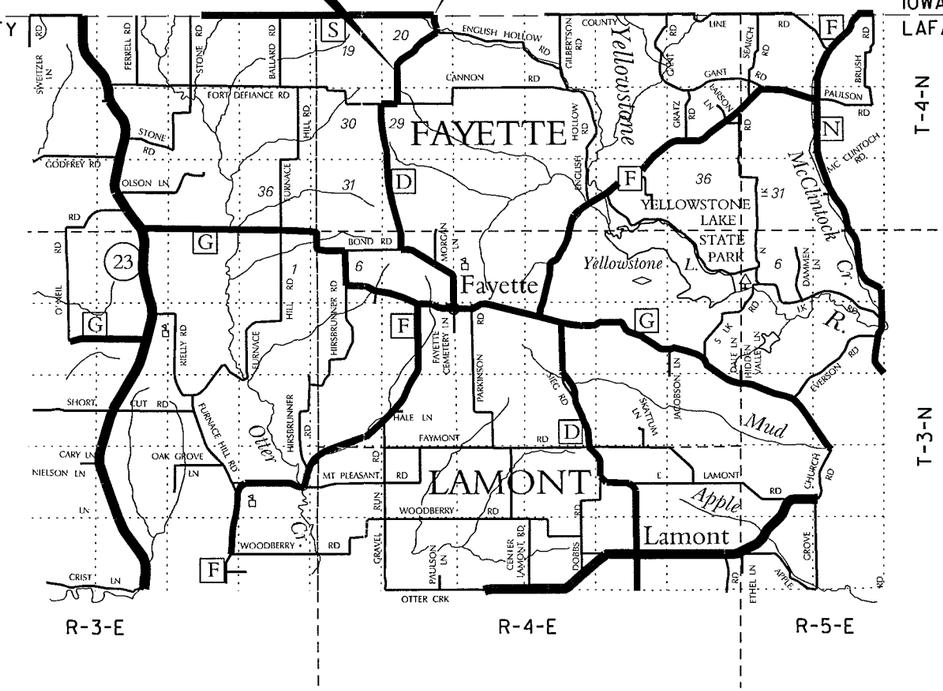

ACCEPTED FOR

COUNTY of LAFAYETTE

Aug. 9, 2012 — Thomas R. Flo
(Date) — (COUNTY HIGHWAY COMMISSIONER)

ORIGINAL PLAT PREPARED BY

MSA PROFESSIONAL SERVICES
TRANSPORTATION • MUNICIPAL • REMEDIATION
DEVELOPMENT • ENVIRONMENTAL

2901 International Lane, Suite 300 Madison, WI 53704-3133
608-242-7779 1-800-146-0879 Fax: 608-242-5664

WISCONSIN DANIEL R. HIGGS S-2878 MADISON WI LAND SURVEYOR

10/12/12 — Daniel R. Higgs
(Date) — (Registered Land Surveyor)

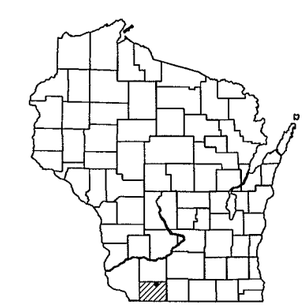

NOTES:

COORDINATES AND BEARINGS ON THIS PLAT ARE ORIENTED TO THE WISCONSIN COUNTY COORDINATE SYSTEM, LAFAYETTE COUNTY ZONE, NAD 83 (2007) ADJUSTMENT. THE COORDINATES SHOWN ARE GRID COORDINATES AND ARE TO BE USED AS GRID OR GROUND VALUES ON THIS PLAT.

RIGHT-OF-WAY MONUMENTS ARE TYPE 2 MONUMENTS (TYPICALLY 3/4" x 24" REBAR) AND WILL BE PLACED PRIOR TO THE COMPLETION OF THE PROJECT.

RIGHT-OF-WAY BOUNDARIES ARE DEFINED WITH COURSES OF THE PERIMETER OF THE HIGHWAY LANDS REFERENCED TO THE U.S. PUBLIC LAND SURVEY SYSTEM.

EXISTING RIGHT-OF-WAY IS BASED ON DEEDS AND SURVEYS OF RECORD.

ALL STATION/OFFSET DATA IS REFERENCED TO THE MAINLINE ALIGNMENT (CTH D). PARCEL 3 DRIVEWAY ALIGNMENT DATA AND SIDEROAD ALIGNMENT DATA (ENGLISH HOLLOW ROAD) OMITTED FOR CLARITY.

N

LAYOUT
SCALE 0 — 1 MI.

TOTAL NET LENGTH OF CENTERLINE = 1.052 MI.

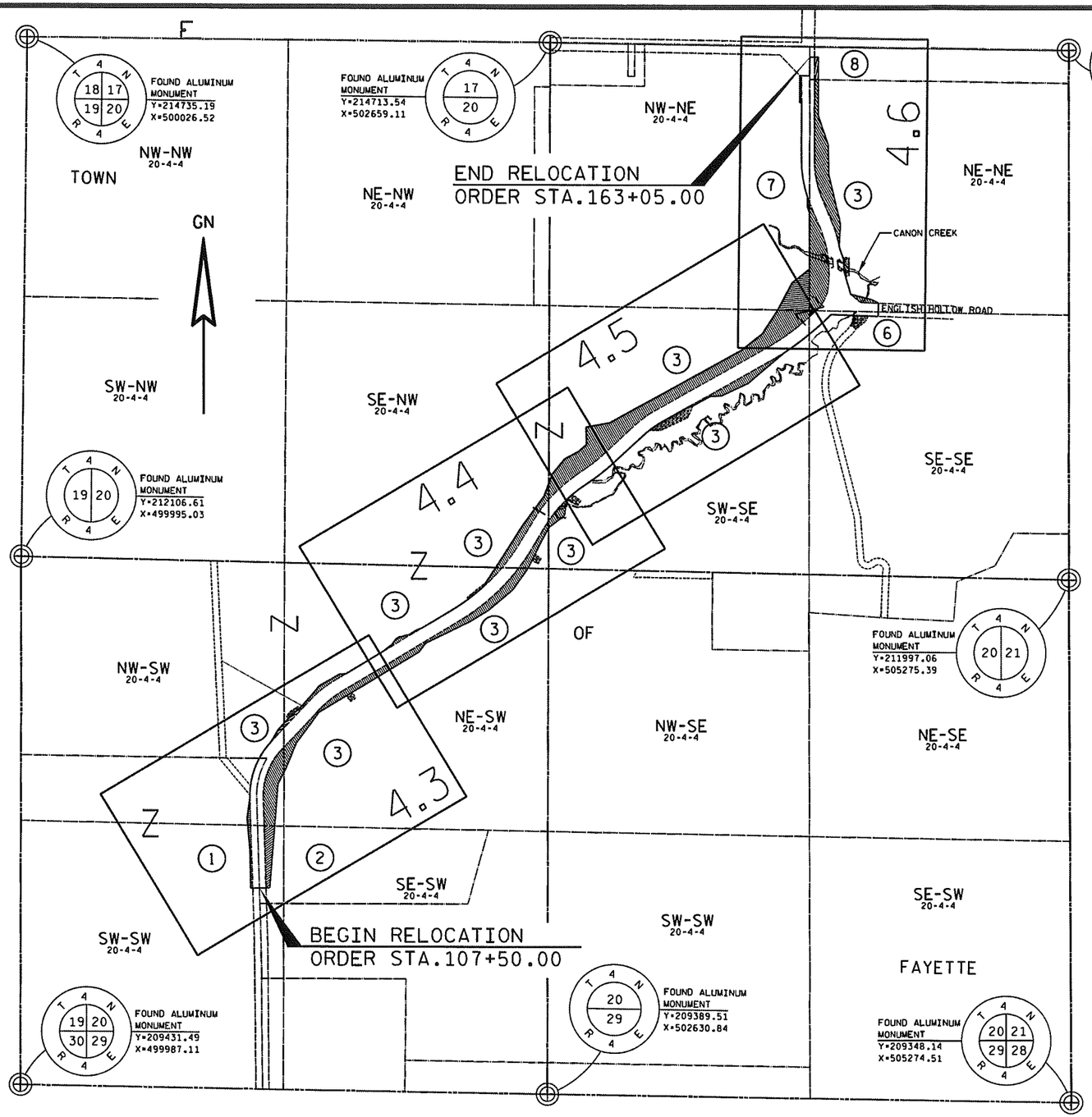

SCHEDULE OF LANDS & INTERESTS REQUIRED

OWNER'S NAMES ARE SHOWN FOR REFERENCE PURPOSES ONLY AND ARE SUBJECT TO CHANGE PRIOR TO THE TRANSFER OF LAND INTERESTS TO LAFAYETTE COUNTY.

PARCEL NUMBER	OWNER(S)	INTEREST REQUIRED	EXISTING R/W	NEW R/W (FEE)	TOTAL R/W	PERMANENT LIMITED EASEMENT (PLE)	TEMPORARY LIMITED EASEMENT (TLE)	SHEET NUMBER(S)
1	JAMES N. AND MARY L. MEYLOR	FEE	0.51 ACRES	0.10 ACRES	0.61 ACRES	--	--	4.3
2	STEVEN M. AND DAWN F. FERRELL	FEE	0.24 ACRES	0.26 ACRES	0.50 ACRES	--	--	4.3
3	CVM FARM, LLC	FEE/TLE	7.44 ACRES	7.39 ACRES	14.83 ACRES	--	0.42 ACRES	4.3, 4.4, 4.5, 4.6
4								
5								
6	JOHN C. HUBBARD	FEE/TLE	0.27 ACRES	0.01 ACRES	0.28 ACRES	--	0.09 ACRES	4.6
7	BARRETT J. CORNEILLE REVOCABLE TRUST	FEE	0.44 ACRES	0.51 ACRES	0.95 ACRES	--	--	4.6
8	J. ROBERT CORNEILLE AND BARRETT J. CORNEILLE	FEE	0.09 ACRES	0.05 ACRES	0.14 ACRES	--	--	4.6
81	CENTURYLINK	CONVEYANCE OF RIGHTS	--	--	--	--	--	4.3, 4.4
82	ALLIANT ENERGY	CONVEYANCE OF RIGHTS	--	--	--	--	--	4.3, 4.4, 4.5, 4.6
TOTALS			8.99 ACRES	8.32 ACRES	17.31 ACRES	--	0.51 ACRES	

REVISION DATE	DATE	SCALE, FEET	HWY: CTH D	STATE R/W PROJECT NUMBER 5648-00-01	PLAT SHEET 4.2	
	GRID FACTOR	0 300' 600'	COUNTY: LAFAYETTE	CONSTRUCTION PROJECT NUMBER 5648-00-72	PS&E SHEET	E

FILE NAME : P:\2300s\2390s\2398\02398000\CADD\Plansht s\PLAT02.dgn PLOT DATE : 6/12/2012 PLOT BY : dhiggs PLOT NAME : PLOT SCALE : 1:600

WISDOT/CADDS SHEET 75

PLAT02.dgn 6/12/2012 9:51:06 AM dhiggs

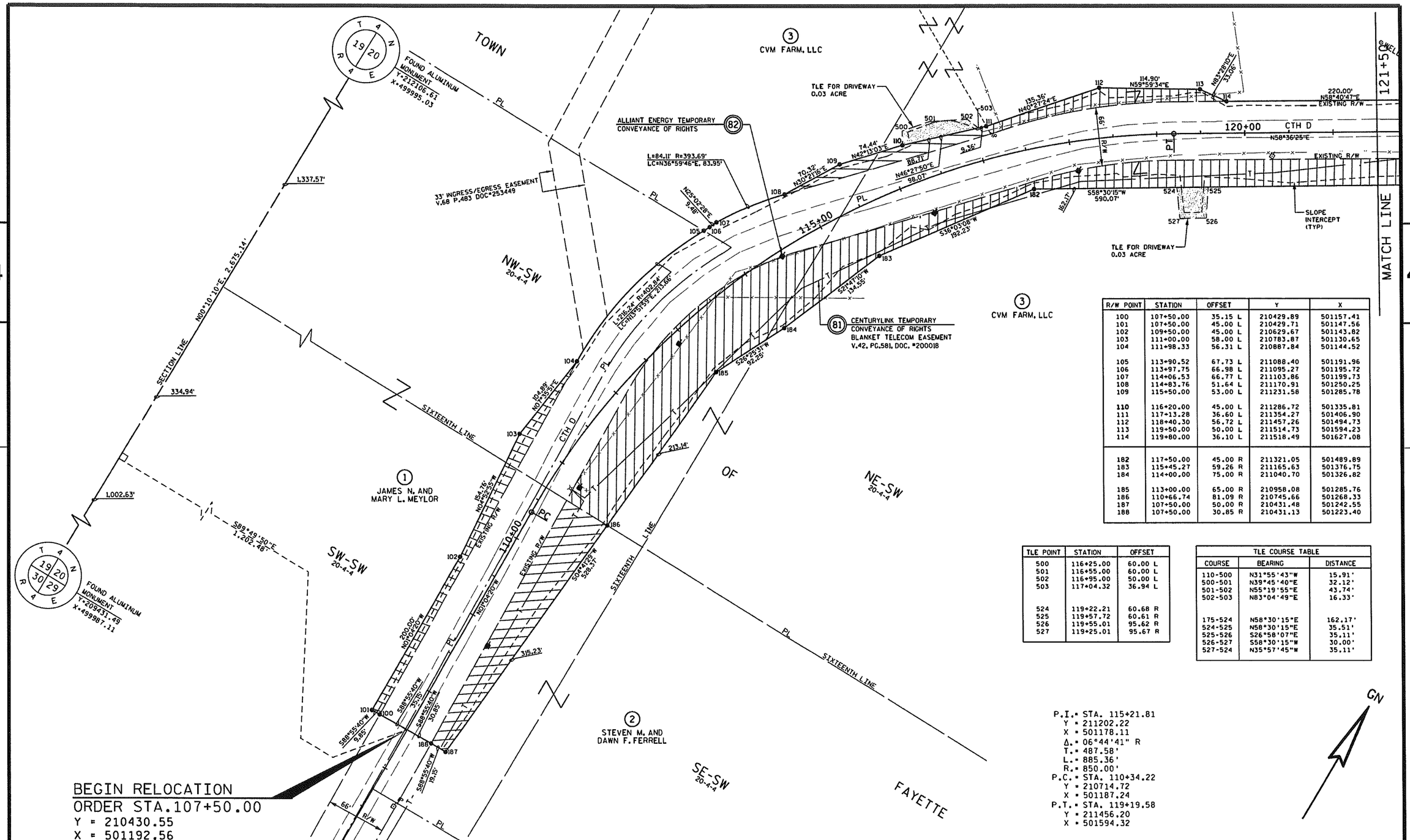

R/W POINT	STATION	OFFSET	Y	X
100	107+50.00	35.15 L	210429.89	501157.41
101	107+50.00	45.00 L	210429.71	501147.56
102	109+50.00	45.00 L	210629.67	501143.82
103	111+00.00	58.00 L	210783.87	501130.65
104	111+98.33	56.31 L	210887.84	501144.52
105	113+90.52	67.73 L	211088.40	501191.96
106	113+97.75	66.98 L	211095.27	501195.72
107	114+06.53	66.77 L	211103.86	501199.73
108	114+83.76	51.64 L	211170.91	501250.25
109	115+50.00	53.00 L	211231.58	501285.78
110	116+20.00	45.00 L	211286.72	501335.81
111	117+13.28	36.60 L	211354.27	501406.90
112	118+40.30	56.72 L	211457.26	501494.73
113	119+50.00	50.00 L	211514.73	501594.23
114	119+80.00	36.10 L	211518.49	501627.08
182	117+50.00	45.00 R	211321.05	501489.89
183	115+45.27	59.26 R	211165.63	501376.75
184	114+00.00	75.00 R	211040.70	501326.82
185	113+00.00	65.00 R	210958.08	501285.76
186	110+66.74	81.09 R	210745.66	501268.33
187	107+50.00	50.00 R	210431.48	501242.55
188	107+50.00	30.85 R	210431.13	501223.40

TLE POINT	STATION	OFFSET
500	116+25.00	60.00 L
501	116+55.00	60.00 L
502	116+95.00	50.00 L
503	117+04.32	36.94 L
524	119+22.21	60.68 R
525	119+57.72	60.61 R
526	119+55.01	95.62 R
527	119+25.01	95.67 R

TLE COURSE TABLE		
COURSE	BEARING	DISTANCE
110-500	N31°55'43"W	15.91'
500-501	N39°45'40"E	32.12'
501-502	N55°19'55"E	43.74'
502-503	N83°04'49"E	16.33'
175-524	N58°30'15"E	162.17'
524-525	N58°30'15"E	35.51'
525-526	S26°58'07"E	35.11'
526-527	S58°30'15"W	30.00'
527-524	N35°57'45"W	35.11'

P.I. = STA. 115+21.81
Y = 211202.22
X = 501178.11
Δ. = 06°44'41" R
T. = 487.58'
L. = 885.36'
R. = 850.00'
P.C. = STA. 110+34.22
Y = 210714.72
X = 501187.24
P.T. = STA. 119+19.58
Y = 211456.20
X = 501594.32

GN

REVISION DATE	DATE	SCALE, FEET	HWY: CTH D	STATE R/W PROJECT NUMBER 5648-00-01	PLAT SHEET 4.3	
	GRID FACTOR	0 50' 100'	COUNTY: LAFAYETTE	CONSTRUCTION PROJECT NUMBER 5648-00-72	PS&E SHEET	E

FILE NAME : P:\2300s\2390s\2398\02398000\CADD\Plansht s\PLAT03.dgn PLOT DATE : 6/12/2012 PLOT BY : dhiggs PLOT NAME : PLOT SCALE : 1:100

WISDOT/CADDS SHEET 75

PLAT03.dgn 6/12/2012 9:51:25 AM dhiggs

TLE POINT	STATION	OFFSET
521	127+00.00	39.60 L
522	127+00.00	50.00 L
523	128+30.00	56.11 L
528	130+64.97	58.47 R
529	131+02.61	56.13 R
530	130+98.31	94.21 R
531	130+68.31	94.21 R
532	134+67.76	56.82 R
533	134+69.13	112.02 R
534	134+36.03	112.71 R

TLE COURSE TABLE

COURSE	BEARING	DISTANCE
521-522	N31°23'35"W	10.40'
522-523	N51°20'09"E	120.51'
523-123	S32°41'30"W	28.86'
169-528	N27°08'51"E	43.44'
528-529	N27°08'51"E	37.71'
529-530	S52°50'49"E	38.32'
530-531	S30°42'18"W	30.00'
531-528	N64°37'48"W	35.89'
166-532	L=41.14 R=617.00 LC=N48°47'52"E, 41.14'	
532-533	S53°15'26"E	55.22'
533-534	S35°59'26"W	30.00'
534-166	N62°18'41"W	65.01'

R/W POINT	STATION	OFFSET	Y	X
115	122+00.00	35.82 L	211632.85	501815.02
116	122+50.00	42.00 L	211664.17	501854.49
117	122+85.13	56.32 L	211694.70	501877.02
118	123+02.03	56.32 L	211703.50	501891.44
119	123+50.00	40.00 L	211714.55	501940.89
120	124+00.00	40.00 L	211740.60	501983.57
121	124+25.00	35.53 L	211749.81	502007.24
122	126+05.30	35.30 L	211843.53	502161.26
123	128+00.00	47.61 L	211956.41	502312.96
124	129+29.23	74.08 L	212057.18	502377.63
125	132+00.00	72.00 L	212275.17	502517.53
126	133+74.53	54.97 L	212418.07	502624.04
127	134+37.14	72.91 L	212482.34	502647.26
128	134+81.71	88.15 L	212529.31	502664.23
129	135+74.68	90.50 L	212606.32	502727.87
130	136+50.00	65.00 L	212645.08	502802.55
131	137+00.00	65.00 L	212680.39	502841.67
171	135+95.67	85.04 R	212500.40	502869.42
172	135+16.42	68.08 R	212456.89	502807.00
173	134+25.64	48.43 R	212401.16	502738.17
174	133+50.00	85.00 R	212321.54	502728.24
175	132+51.58	46.87 R	212258.82	502646.07
176	130+22.30	61.21 R	212053.79	502540.94
177	129+00.00	65.00 R	211944.15	502463.64
178	127+50.00	62.00 R	211838.35	502337.72
179	126+50.00	62.00 R	211783.76	502250.11
180	124+00.00	40.00 R	211672.31	502025.24
181	123+50.11	59.91 R	211629.33	501993.02

P.I. = STA. 136+38.27
Y = 212615.23
X = 502803.22
Δ. = 04°46'34" R
T. = 323.97'
L. = 632.85'
R. = 1,200.00'
P.C. = STA. 133+14.30
Y = 212336.68
X = 502637.80
P.T. = STA. 139+47.15
Y = 212772.68
X = 503086.35

P.I. = STA. 128+76.09
Y = 211954.46
X = 502410.81
Δ. = 08°55'11" L
T. = 159.73'
L. = 313.13'
R. = 643.00'
P.C. = STA. 127+16.36
Y = 211871.25
X = 502274.46
P.T. = STA. 130+29.49
Y = 212091.80
X = 502492.37

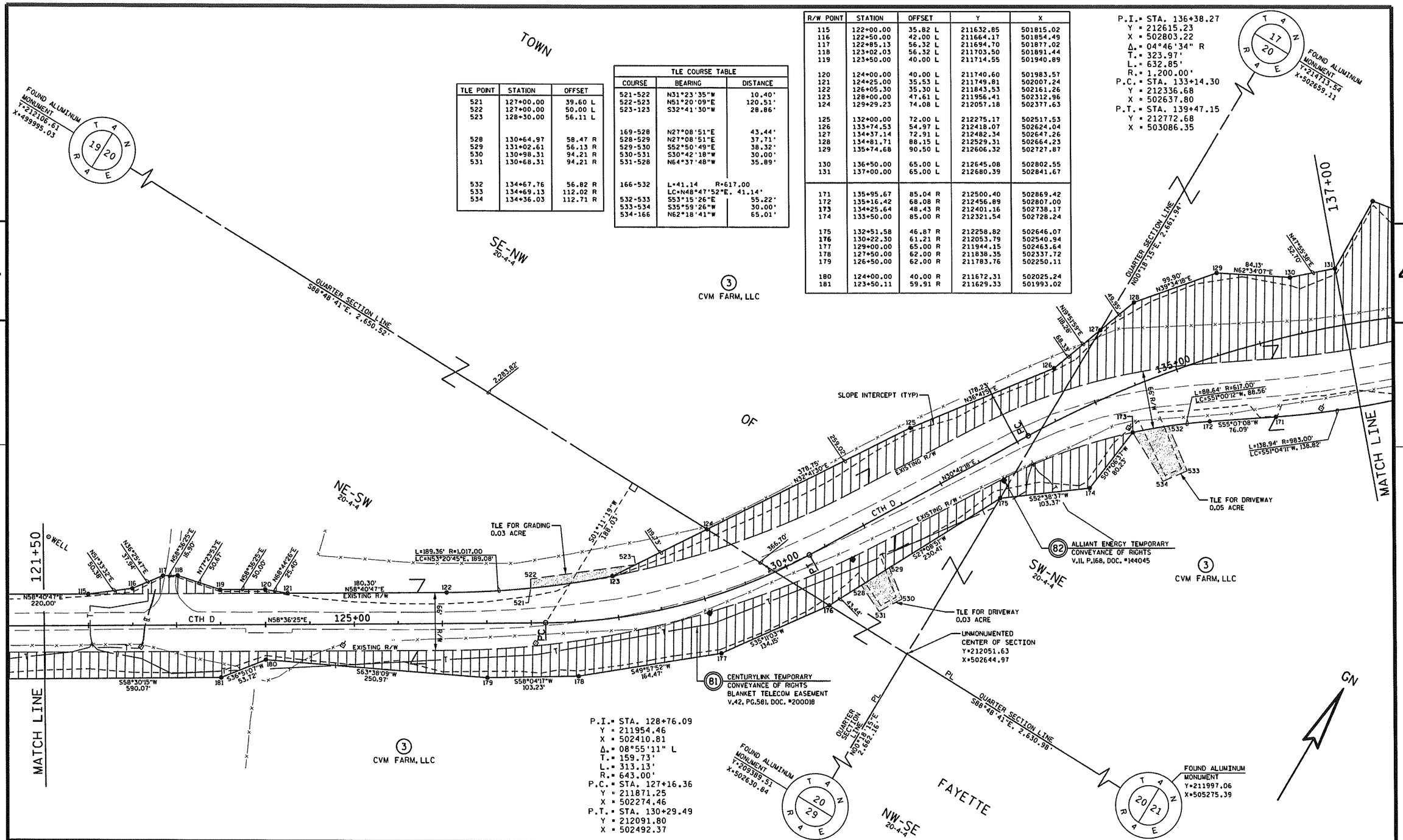

REVISION DATE	DATE	SCALE, FEET 0 50' 100'	HWY: CTH D	STATE R/W PROJECT NUMBER 5648-00-01	PLAT SHEET 4.4	
	GRID FACTOR		COUNTY: LAFAYETTE	CONSTRUCTION PROJECT NUMBER 5648-00-72	PS&E SHEET	E

FILE NAME : P:\2300s\2390s\2398\02398000\CADD\Plansht s\PLAT04.dgn PLOT DATE : 6/12/2012 PLOT BY : dhiggs PLOT NAME : PLOT SCALE : 1:100 WISDOT/CADDS SHEET 75

PLAT04.dgn 6/12/2012 9:51:34 AM dhiggs

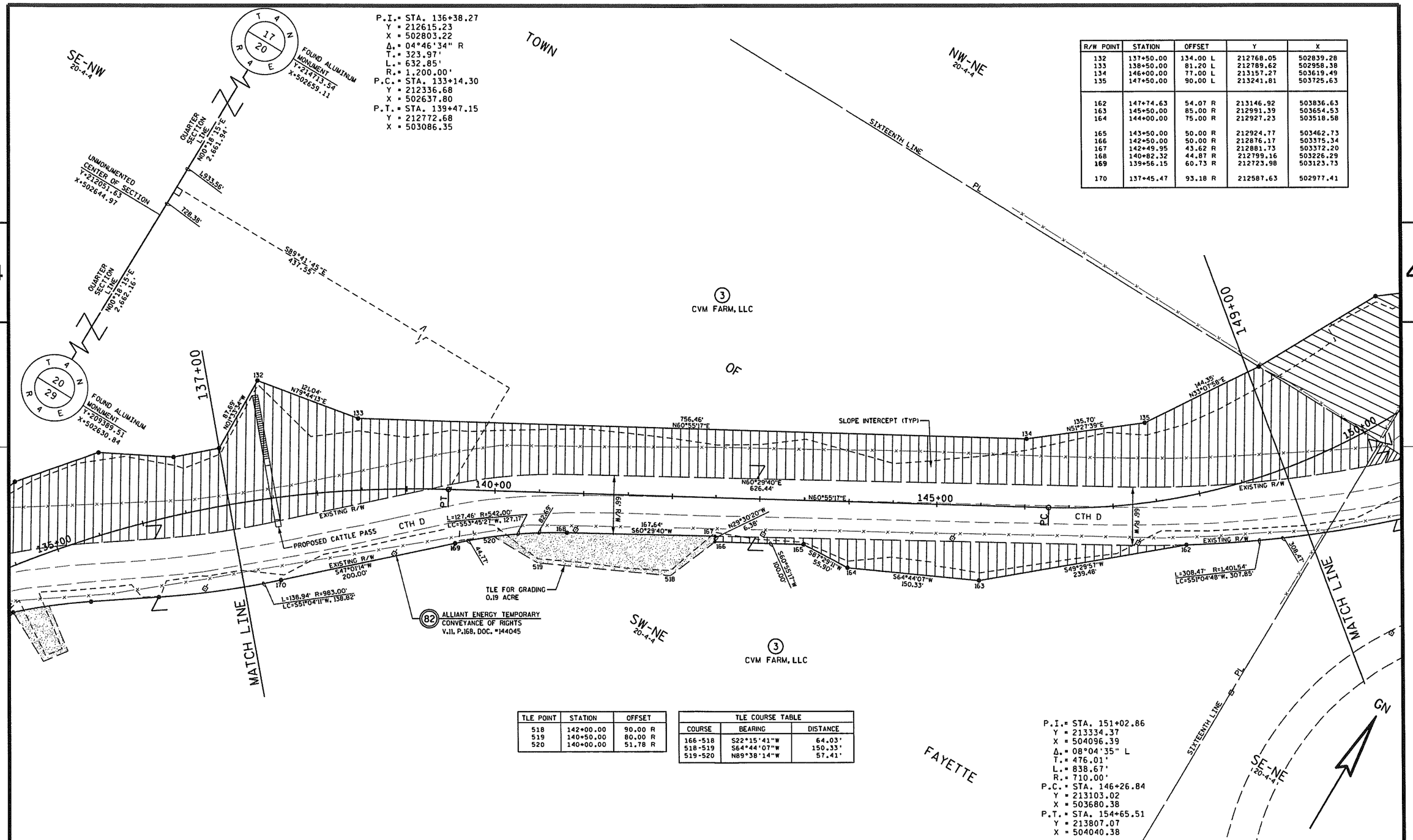

R/W POINT	STATION	OFFSET	Y	X
132	137+50.00	134.00 L	212768.05	502839.28
133	138+50.00	81.20 L	212789.62	502958.38
134	146+00.00	77.00 L	213157.27	503619.49
135	147+50.00	90.00 L	213241.81	503725.63
162	147+74.63	54.07 R	213146.92	503836.63
163	145+50.00	85.00 R	212991.39	503654.53
164	144+00.00	75.00 R	212927.23	503518.58
165	143+50.00	50.00 R	212924.77	503462.73
166	142+50.00	50.00 R	212876.17	503375.34
167	142+49.95	43.62 R	212881.73	503372.20
168	140+82.32	44.87 R	212799.16	503226.29
169	139+56.15	60.73 R	212723.98	503123.73
170	137+45.47	93.18 R	212587.63	502977.41

TLE POINT	STATION	OFFSET
518	142+00.00	90.00 R
519	140+50.00	80.00 R
520	140+00.00	51.78 R

TLE COURSE TABLE		
COURSE	BEARING	DISTANCE
166-518	S22°15'41"W	64.03'
518-519	S64°44'07"W	150.33'
519-520	N89°38'14"W	57.41'

REVISION DATE	DATE	SCALE, FEET 0 50' 100'	HWY: CTH D	STATE R/W PROJECT NUMBER 5648-00-01	PLAT SHEET 4.5
	GRID FACTOR		COUNTY: LAFAYETTE	CONSTRUCTION PROJECT NUMBER 5648-00-72	PS&E SHEET E

FILE NAME : P:\2300s\2390s\2398\02398000\CADD\Plansh ts\PLAT05.dgn PLOT DATE : 6/12/2012 PLOT BY : dhiggs PLOT NAME : PLOT SCALE : 1:100 WISDOT/CADDS SHEET 75

PLAT05.dgn 6/12/2012 9:51:46 AM dhiggs

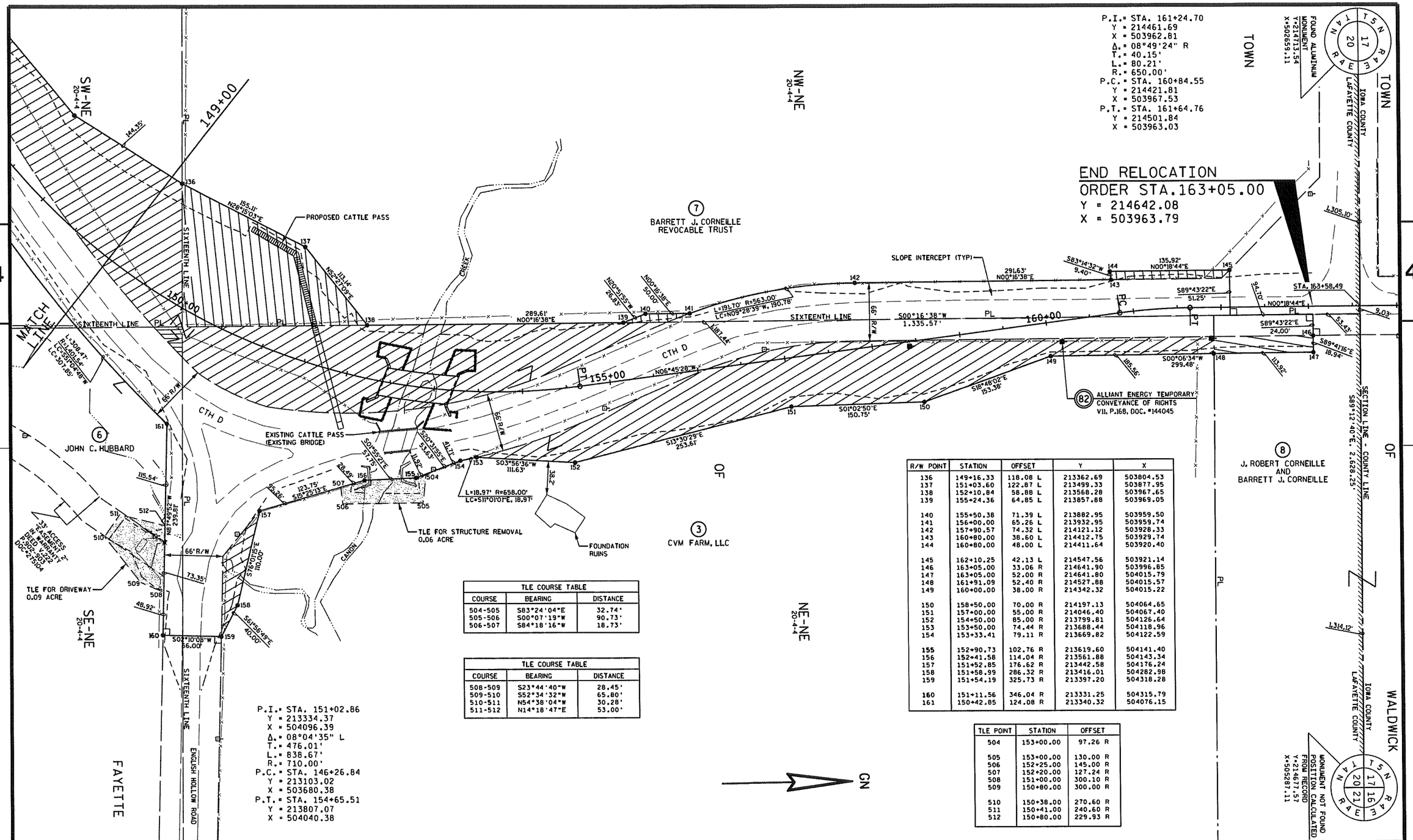

R/W POINT	STATION	OFFSET	Y	X
136	149+16.33	118.08 L	213362.69	503804.53
137	151+03.60	122.87 L	213499.33	503877.95
138	152+10.84	58.88 L	213568.28	503967.65
139	155+24.36	64.85 L	213857.88	503969.05
140	155+50.38	71.39 L	213882.95	503959.50
141	156+00.00	65.26 L	213932.95	503959.74
142	157+90.57	74.32 L	214121.12	503928.33
143	160+80.00	38.60 L	214412.75	503929.74
144	160+80.00	48.00 L	214411.64	503920.40
145	162+10.25	42.13 L	214547.56	503921.14
146	163+05.00	33.06 R	214641.90	503996.85
147	163+05.00	52.00 R	214641.80	504015.79
148	161+91.09	52.40 R	214527.88	504015.57
149	160+00.00	38.00 R	214342.32	504015.22
150	158+50.00	70.00 R	214197.13	504064.65
151	157+00.00	55.00 R	214046.40	504067.40
152	154+50.00	85.00 R	213799.81	504126.64
153	153+50.00	74.44 R	213688.44	504118.96
154	153+33.41	79.11 R	213669.82	504122.59
155	152+90.73	102.76 R	213619.60	504141.40
156	152+41.58	114.04 R	213561.88	504143.34
157	151+52.85	176.62 R	213442.58	504176.24
158	151+58.99	286.32 R	213416.01	504282.98
159	151+54.19	325.73 R	213397.20	504318.28
160	151+11.56	346.04 R	213331.25	504315.79
161	150+42.85	124.08 R	213340.32	504076.15

TLE COURSE TABLE		
COURSE	BEARING	DISTANCE
504-505	S83°24'04"E	32.74'
505-506	S00°07'19"W	90.73'
506-507	S84°18'16"W	18.73'

TLE COURSE TABLE		
COURSE	BEARING	DISTANCE
508-509	S23°44'40"W	28.45'
509-510	S52°34'32"W	65.80'
510-511	N54°38'04"W	30.28'
511-512	N14°18'47"E	53.00'

TLE POINT	STATION	OFFSET
504	153+00.00	97.26 R
505	153+00.00	130.00 R
506	152+25.00	145.00 R
507	152+20.00	127.24 R
508	151+00.00	300.10 R
509	150+80.00	300.00 R
510	150+38.00	270.60 R
511	150+41.00	240.60 R
512	150+80.00	229.93 R

REVISION DATE	DATE	SCALE, FEET 0 50' 100'	HWY: CTH D	STATE R/W PROJECT NUMBER 5648-00-01	PLAT SHEET 4,6
	GRID FACTOR		COUNTY: LAFAYETTE	CONSTRUCTION PROJECT NUMBER 5648-00-72	PS&E SHEET E

FILE NAME : P:\2300s\2390s\2398\02398000\CADD\Plansht s\PLAT06.dgn PLOT DATE : 6/12/2012 PLOT BY : dhiggs PLOT NAME : PLOT SCALE : 1:100 WISDOT/CADDS SHEET 75

PLAT06.dgn 6/12/2012 9:51:56 AM dhiggs

BENCH MARKS

NO.	STATION	DESCRIPTION	OFFSET	ELEV.
22	111+00.51	RR SPIKE IN POST	30.09'RT	1089.01

P.I. = 115+21.81
Y = 211,202.22
X = 501,178.11
Δ. = 59.40
D. = 6.44
T. = 487.58
L. = 885.36
R. = 850.00
P.C. = 110+34.22
P.T. = 119+19.58
S.E. = 5.8% (MAX)

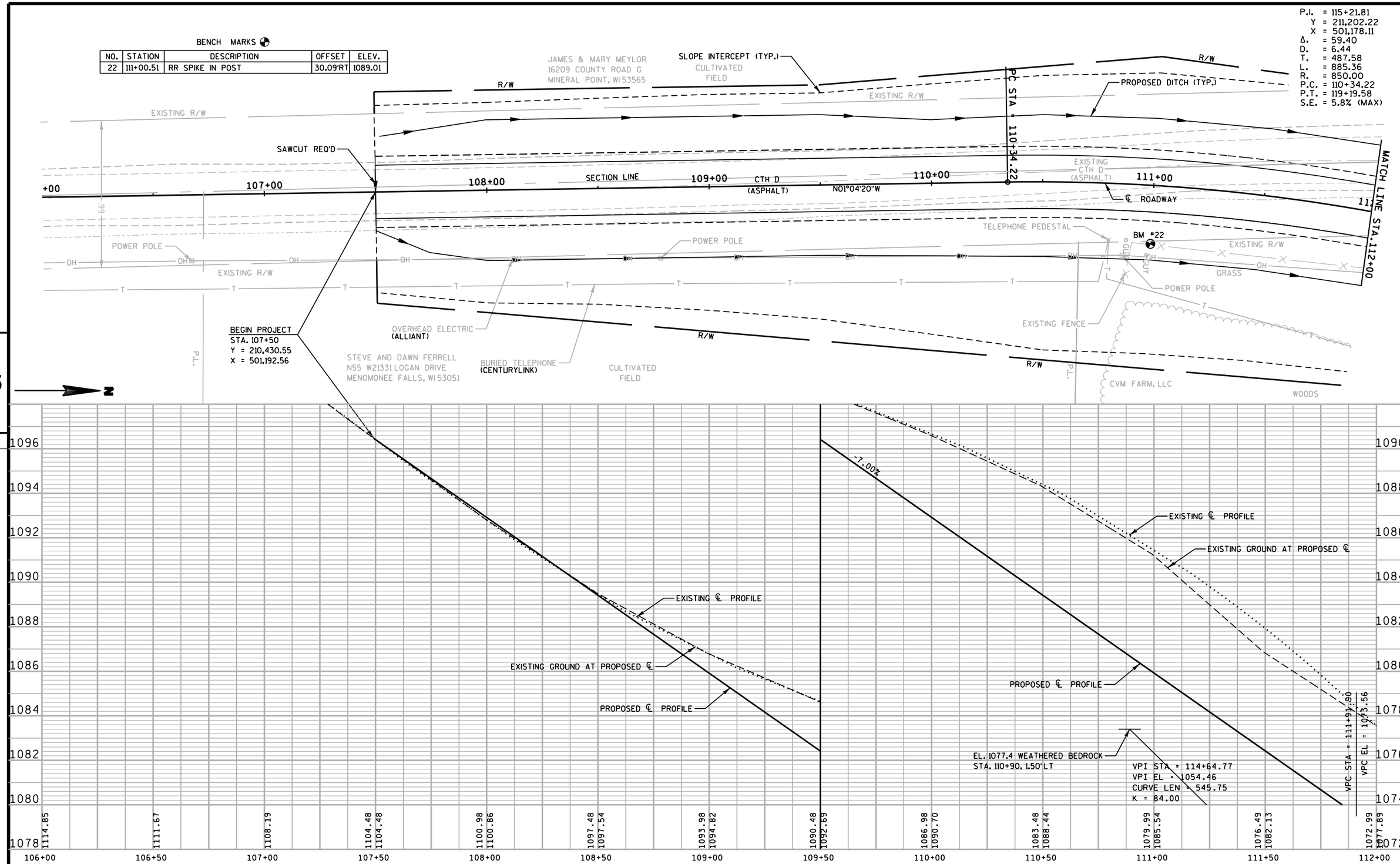

PROJECT NO:5648-00-72	HWY:CTH D	COUNTY:LAFAYETTE	PLAN AND PROFILE	SHEET 48	E

P.I. = 115+21.81
Y = 211,202.22
X = 501,178.11
Δ. = 59.40
D. = 6.44
T. = 487.58
L. = 885.36
R. = 850.00
P.C. = 110+34.22
P.T. = 119+19.58
S.E. = 5.8% (MAX)

JAMES & MARY MEYLOR
16209 COUNTY ROAD G
MINERAL POINT, WI 53565

F.E.
STA. 112+57, LT
24" ϕ CP
W/ ENDWALLS REQ'D

F.E.
(GRASS)

SLOPE INTERCEPT (TYP.)

WOODS

CVM FARM, LLC

R/W

EXISTING R/W

EXISTING CTH D (ASPHALT)

EXISTING 18" ϕ CMP CULVERT PIPE (TO REMAIN)

TLE

P.E.
STA. 117+00, LT
24" ϕ CP
W/ ENDWALLS REQ'D

EXISTING 18" ϕ CMP CULVERT PIPE (REMOVE)

LAWN

116+00

115+00

114+00

113+00

117+00

118+00

STA. 116+13.83, 33.95' LT
INLET MEDIAN 2 GRATE
INLET COVER TYPE MS (2)
SINGLE SLOPE

1.1

CTH D
(ASPHALT)

STA. 116+97.80=
STA. 300+00

℄ ROADWAY

36" ϕ CP W/
1 - ENDWALL REQ'D

POWER POLE

PASTURE

PROPOSED DITCH (TYP.)

MATCH LINE STA. 118+00

MATCH LINE STA. 112+00

EXISTING FENCE

OVERHEAD ELECTRIC
(ALLIANT)

BURIED TELEPHONE
(CENTURYLINK)

5

5

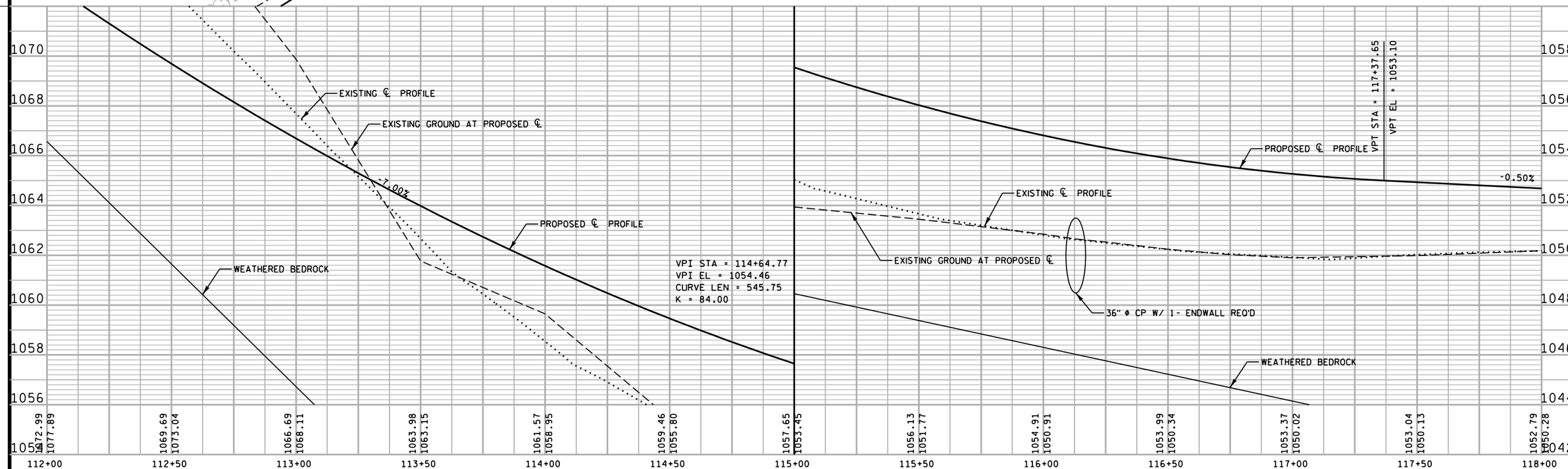

PROJECT NO:5648-00-72	HWY:CTH D	COUNTY:LAFAYETTE	PLAN AND PROFILE	SHEET 49	E

BENCH MARKS

NO.	STATION	DESCRIPTION	OFFSET	ELEV.
23	118+05.51	NAIL IN FENCE POST	26.38'RT	1047.56

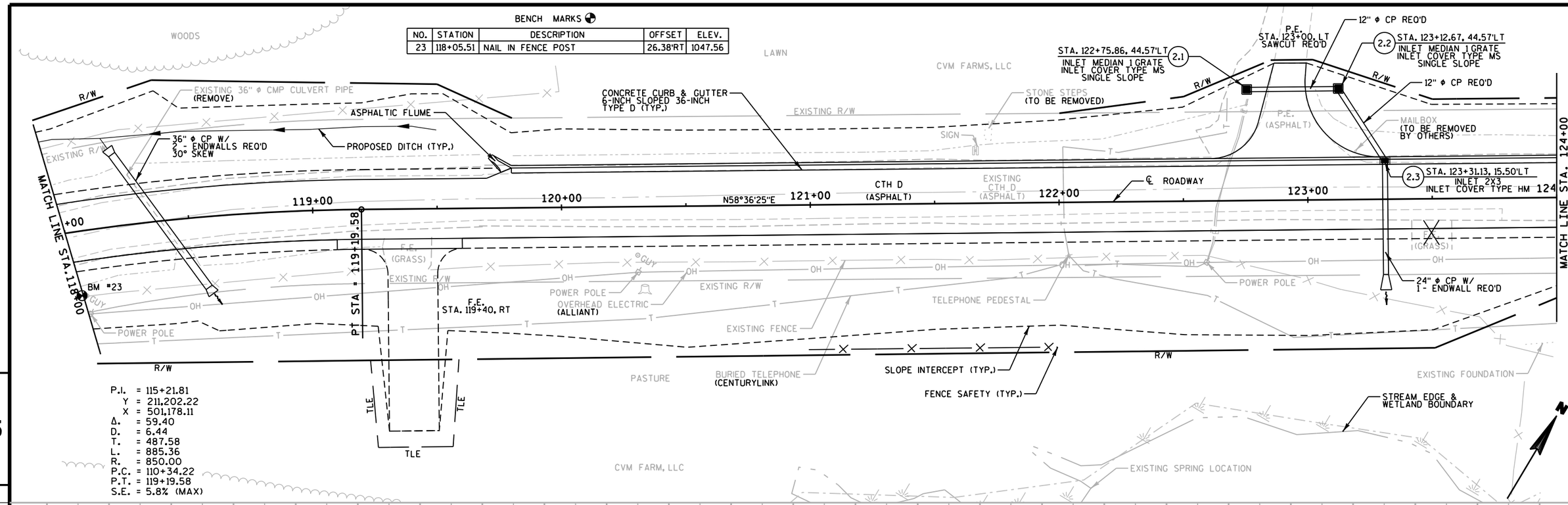

P.I. = 115+21.81
Y = 211,202.22
X = 501,178.11
Δ. = 59.40
D. = 6.44
T. = 487.58
L. = 885.36
R. = 850.00
P.C. = 110+34.22
P.T. = 119+19.58
S.E. = 5.8% (MAX)

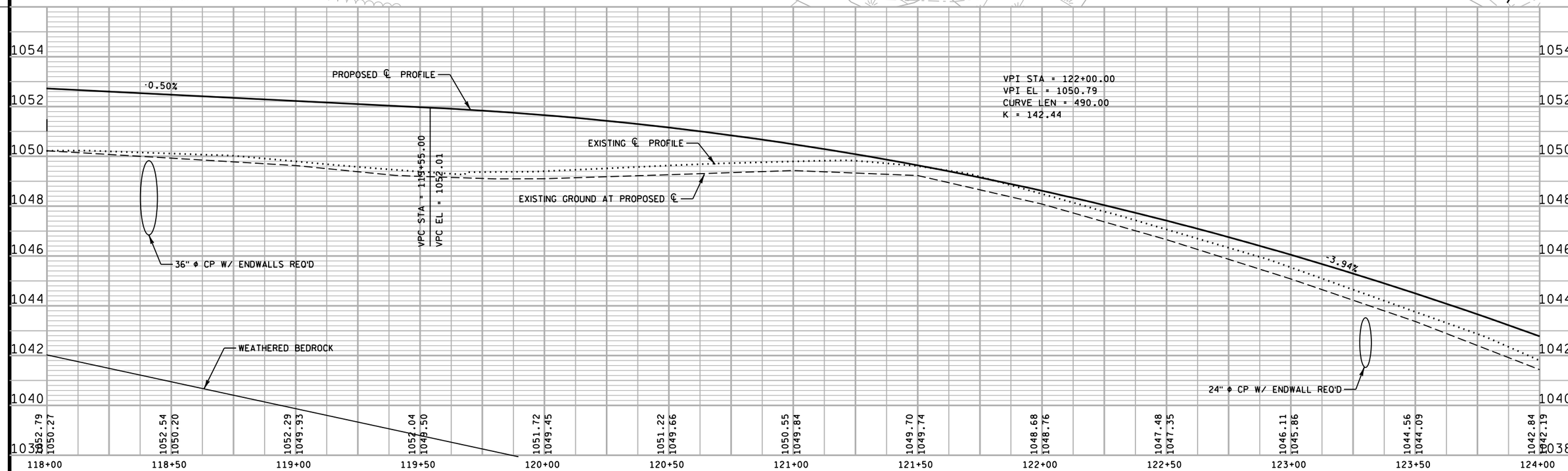

PROJECT NO:5648-00-72	HWY:CTH D	COUNTY:LAFAYETTE	PLAN AND PROFILE	SHEET 50	E

BENCH MARKS

NO.	STATION	DESCRIPTION	OFFSET	ELEV.
24	128+36.72	NAIL IN FENCE POST	18.27'RT	1025.56

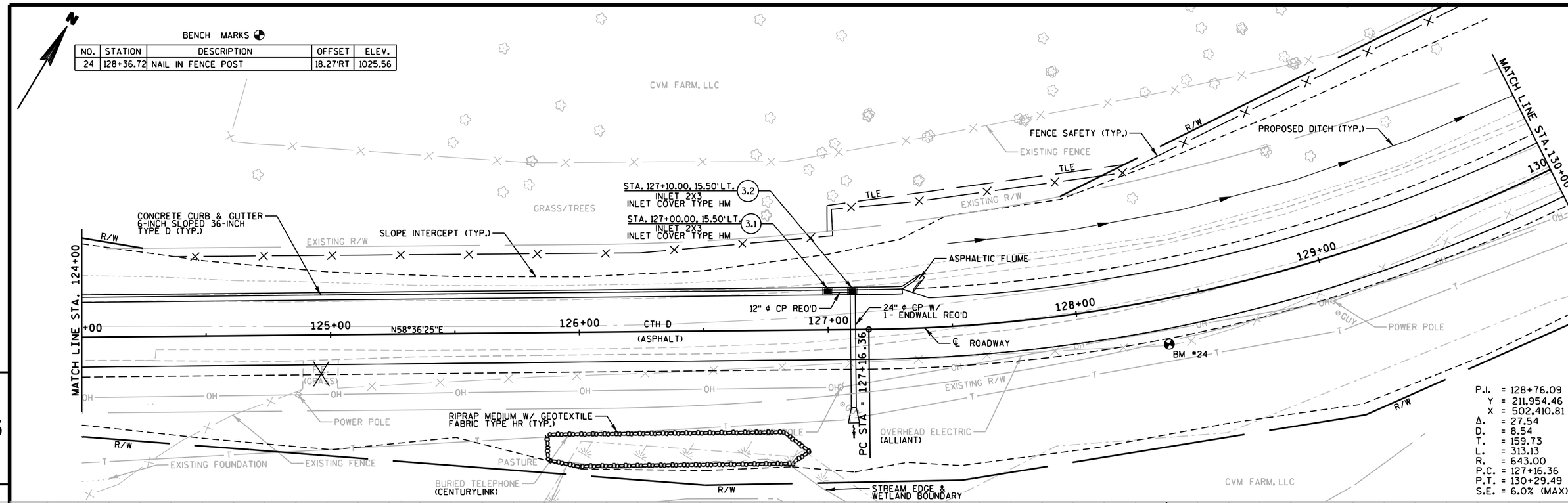

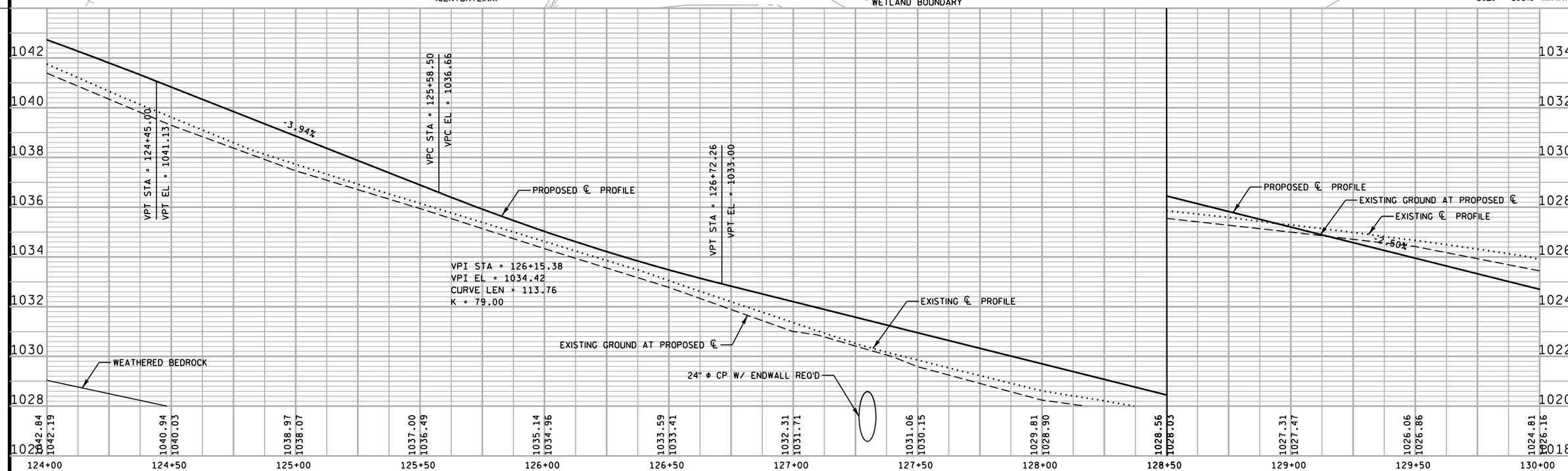

PROJECT NO:5648-00-72	HWY:CTH D	COUNTY:LAFAYETTE	PLAN AND PROFILE	SHEET 51	E

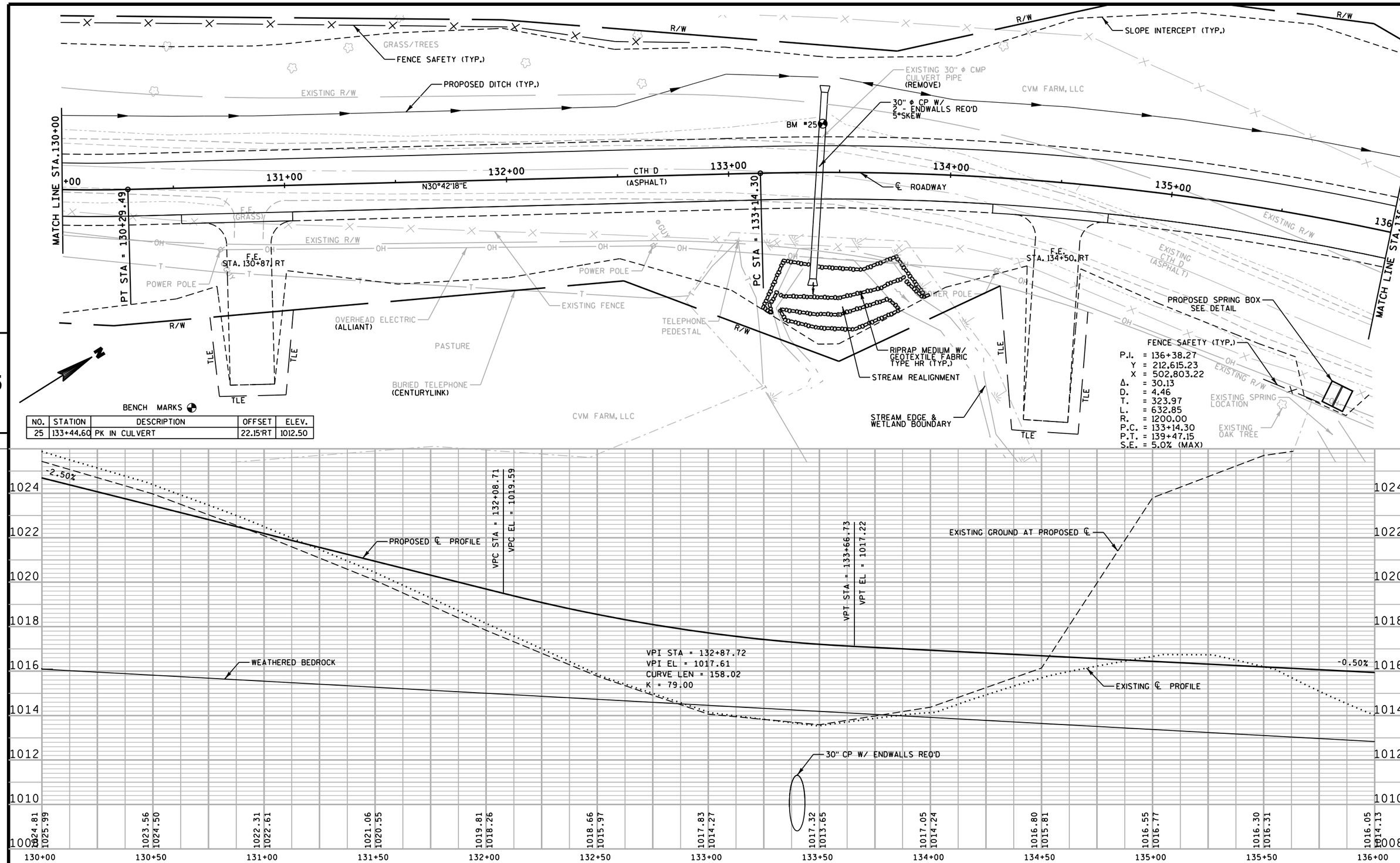

NO.	STATION	DESCRIPTION	OFFSET	ELEV.
25	133+44.60	PK IN CULVERT	22.15'RT	1012.50

PROJECT NO:5648-00-72	HWY:CTH D	COUNTY:LAFAYETTE	PLAN AND PROFILE	SHEET 52	E

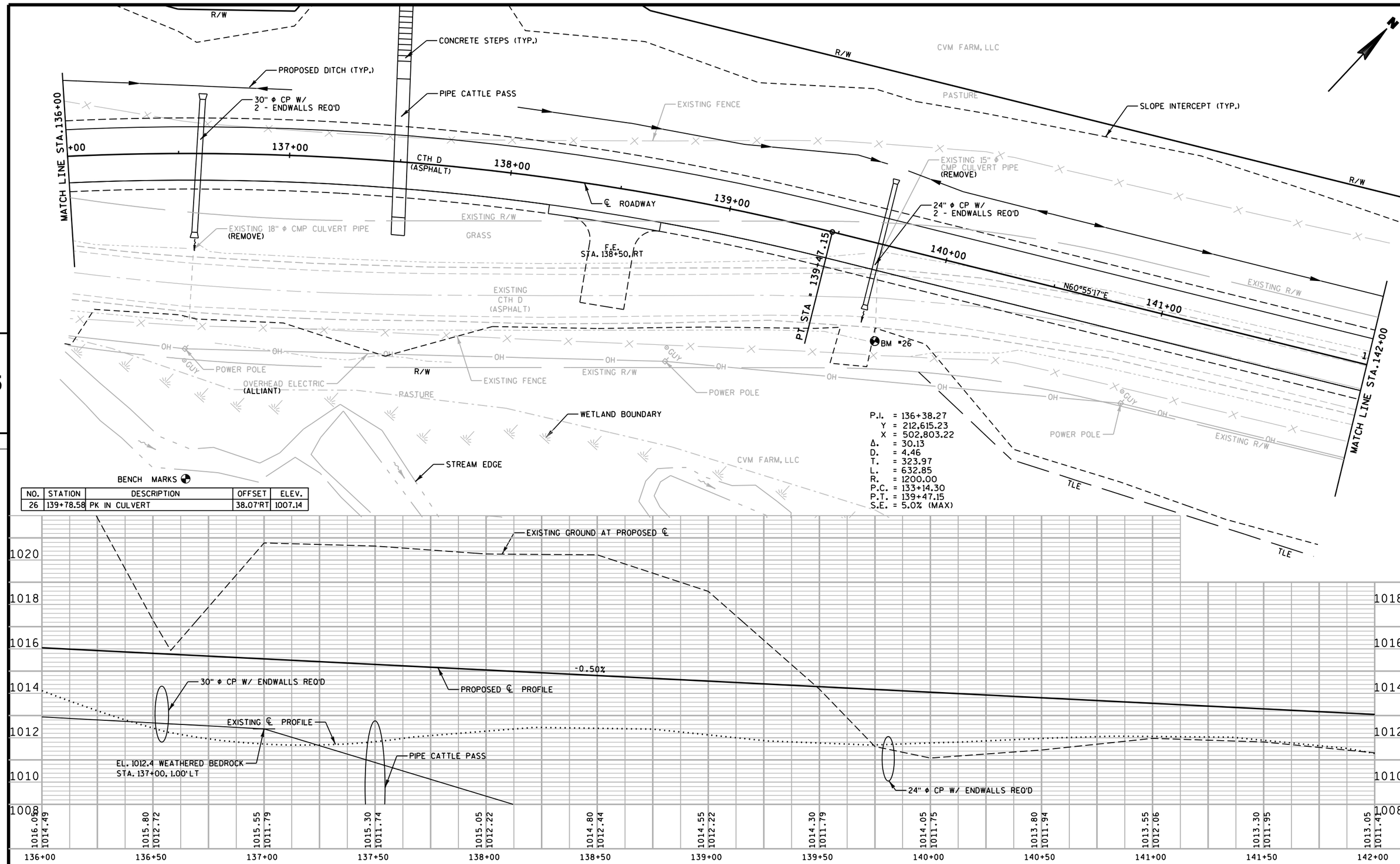

NO.	STATION	DESCRIPTION	OFFSET	ELEV.
26	139+78.58	PK IN CULVERT	38.07'RT	1007.14

5

5

PROJECT NO:5648-00-72	HWY:CTH D	COUNTY:LAFAYETTE	PLAN AND PROFILE	SHEET 53	E

FILE NAME : $$....designfile....$$ PLOT DATE : $$...plottingdate...$$ PLOT BY : $$...plotuser...$$ PLOT NAME : PLOT SCALE : $$.....plotscale.....$$ WISDOT/CADDS SHEET 30

1004

1004

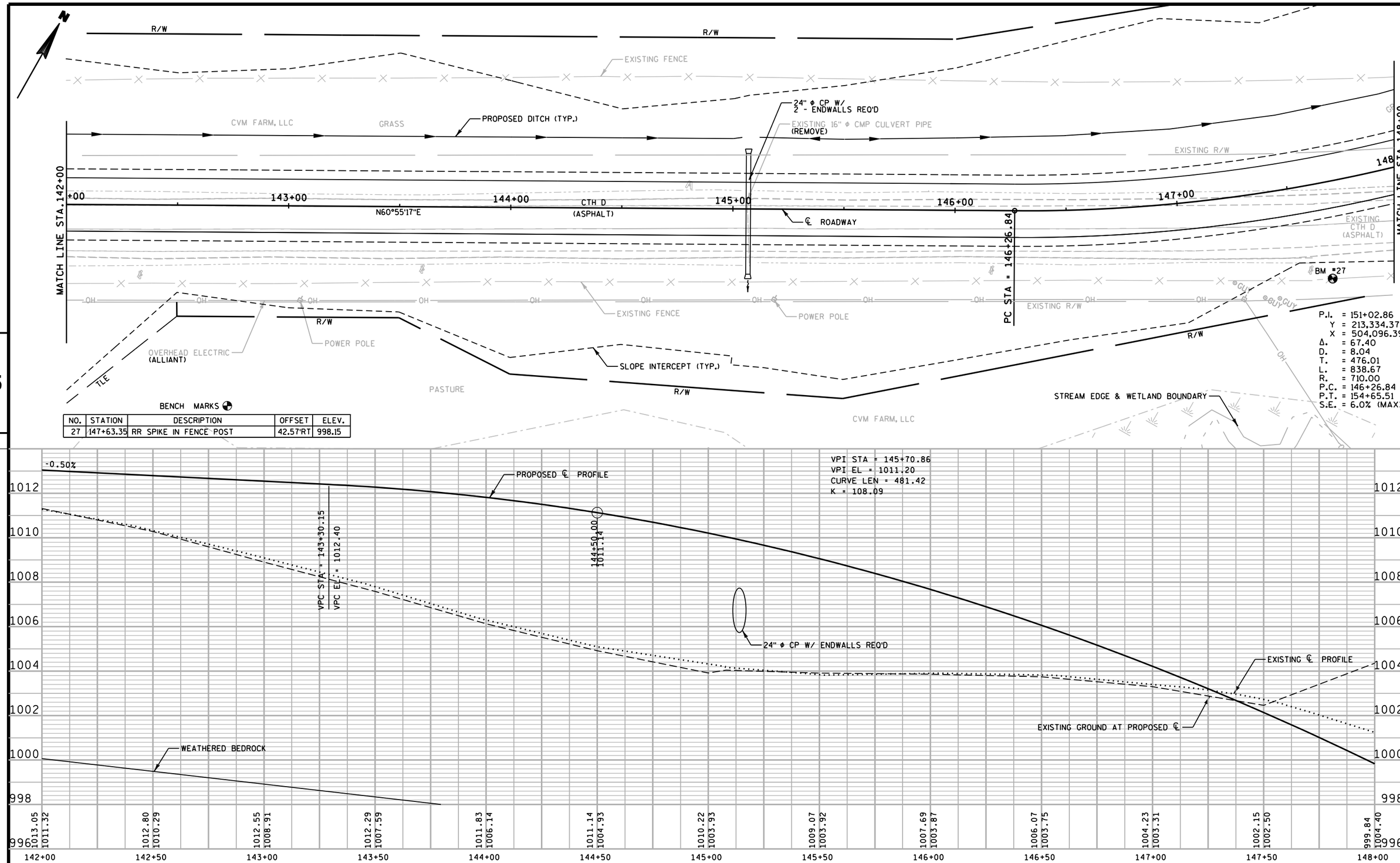

BENCH MARKS

NO.	STATION	DESCRIPTION	OFFSET	ELEV.
27	147+63.35	RR SPIKE IN FENCE POST	42.57'RT	998.15

PROJECT NO:5648-00-72	HWY:CTH D	COUNTY:LAFAYETTE	PLAN AND PROFILE	SHEET 54	E

P.I. = 151+02.86
Y = 213,334.37
X = 504,096.39
Δ. = 67.40
D. = 8.04
T. = 476.01
L. = 838.67
R. = 710.00
P.C. = 146+26.84
P.T. = 154+65.51
S.E. = 6.0% (MAX)

BENCH MARKS

NO.	STATION	DESCRIPTION	OFFSET	ELEV.
28	152+81.79	CHISELED X ON WINGWALL	73.29'RT	973.10
31	152+75.52	OLD REBAR STUB	93.17'RT	970.21

MATCH LINE STA. 148+00

MATCH LINE STA 154+00

PASTURE

CVM FARM, LLC

GRASS

EXISTING FENCE

PROPOSED DITCH (TYP.)

BEAM GUARD (TYP.)

STA. 151+18.00, 37.50' LT
INLET MEDIAN 1 GRATE
INLET COVER TYPE MS
SINGLE SLOPE

4.1

STA. 151+18.80 =
STA. 200+00.00
TYPE C INTERSECTION REQ'D

149+00

150+00

151+00

152+00

153+00

154

CTH D
(ASPHALT)

90.0°

PAVED SHOULDER

EXISTING
℄ ROADWAY

EXISTING
CTH D
(ASPHALT)

P.L.

JOHN C. HUBBARD
21695 ENGLISH HOLLOW ROAD
MINERAL POINT, WI 53565

ENGLISH HOLLOW ROAD
(ASPHALT)

BARRETT J. CORNEILLE
REVOCABLE TRUST

R/W

CONCRETE STEPS (TYP.)

PROPOSED STRUCTURE
(B-33-123)

SLOPE INTERCEPT (TYP.)

24" ϕ CP W/
1 - ENDWALL REQ'D

CANYON CREEK

FENCE SAFETY (TYP.)

OVERHEAD
ELECTRIC
(ALLIANT)

POWER POLE

BM #28

BM #31

EXISTING STRUCTURE
P-33-43 (REMOVE)

ABUTMENT REMAINS
(REMOVE)

TILE

PIPE CATTLE PASS
CORRUGATED STEEL
30° SKEW

EXISTING R/W

REMOVE EXISTING STRUCTURE P-33-43
STA. 152+64, RT.
TWO SPAN CONCRETE CULVERT
23.5' CLEAR ROADWAY WIDTH
43.6' OVERALL LENGTH

5

5

EARTHWORK SUMMARY
STA. 107+50 - STA. 163+05

COMMON EXC.	63,567 C.Y.
ROCK EXC.	23,802 C.Y.
ROCK EXPANSION	10%
FILL	33,180 C.Y.
FILL EXPANSION	25%
WASTE	39,893 C.Y.

EXISTING GROUND AT PROPOSED ℄

PROPOSED ℄ PROFILE

EXISTING ℄ PROFILE

EXISTING ℄ PROFILE

WEATHERED BEDROCK

VPT STA = 148+11.57
VPT EL = 999.28

-4.95%

EL. 994.5 WEATHERED BEDROCK
STA. 148+94, 2.50' RT

VPI STA = 145+70.86
VPI EL = 1011.20
CURVE LEN = 481.42
K = 108.09

PROPOSED ℄ PROFILE

VPC STA = 149+80.89
VPC EL = 990.89

STA. 152+76 STRUCTURE B-33-123 REQUIRED
SINGLE SPAN 45"W PRESTRESSED CONCRETE GIRDER
78.0 FOOT SPAN LENGTH
30.0 FOOT CLEAR ROADWAY WIDTH
15° LHF SKEW

OBSERVED WATER EL. 962.50±
(3-24-10)
STREAMBED EL. 961.80±

VPI STA = 154+84.48
VPI EL = 965.94
CURVE LEN = 1007.18
K = 84.25

1000 998 996 994 992 990 988 986 984

984 982 980 978 976 974 972 970 968

999.84 1004.40
997.37 1006.32
994.90 1007.78
992.42 1007.20
989.96 1007.36
987.75 1006.84
985.83 1002.14
984.21 978.49
982.88 976.05
981.80 972.35
981.12 972.80
980.69 971.65
980.55 970.59

148+00 148+50 149+00 149+50 150+00 150+50 151+00 151+50 152+00 152+50 153+00 153+50 154+00

PROJECT NO:5648-00-72	HWY:CTH D	COUNTY:LAFAYETTE	PLAN AND PROFILE	SHEET 55	E

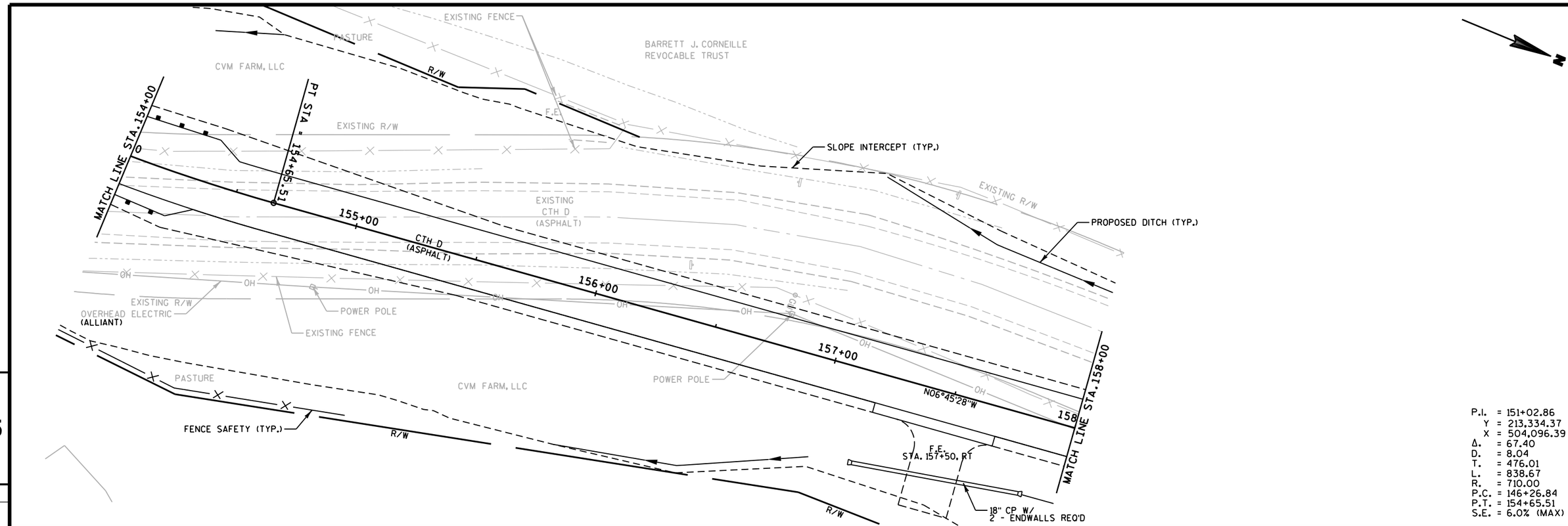

P.I. = 151+02.86
Y = 213,334.37
X = 504,096.39
Δ. = 67.40
D. = 8.04
T. = 476.01
L. = 838.67
R. = 710.00
P.C. = 146+26.84
P.T. = 154+65.51
S.E. = 6.0% (MAX)

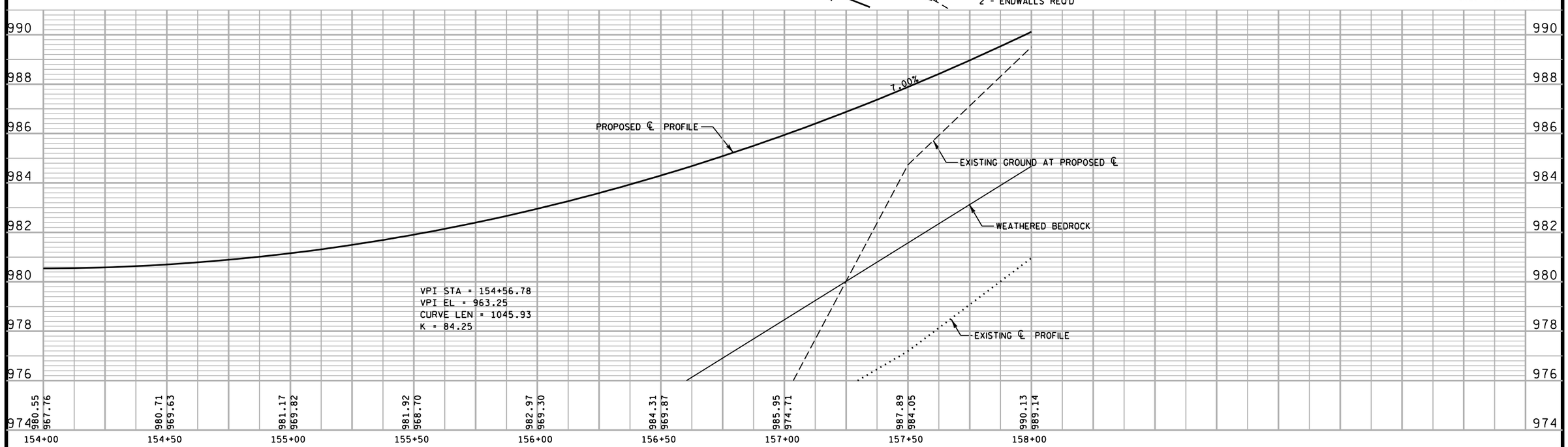

PROJECT NO:5648-00-72	HWY:CTH D	COUNTY:LAFAYETTE	PLAN AND PROFILE	SHEET 56	E

BENCH MARKS

NO.	STATION	DESCRIPTION	OFFSET	ELEV.
30	162+60.92	RR SPIKE IN FENCE POST	115.82'LT	1018.08

P.I. = 161+24.70
Y = 214,461.69
X = 503,962.81
Δ. = 7.04
D. = 7.58
T. = 44.39
L. = 88.66
R. = 718.55
P.C. = 160+80.32
P.T. = 161+68.98
S.E. = 6.0% (MAX)

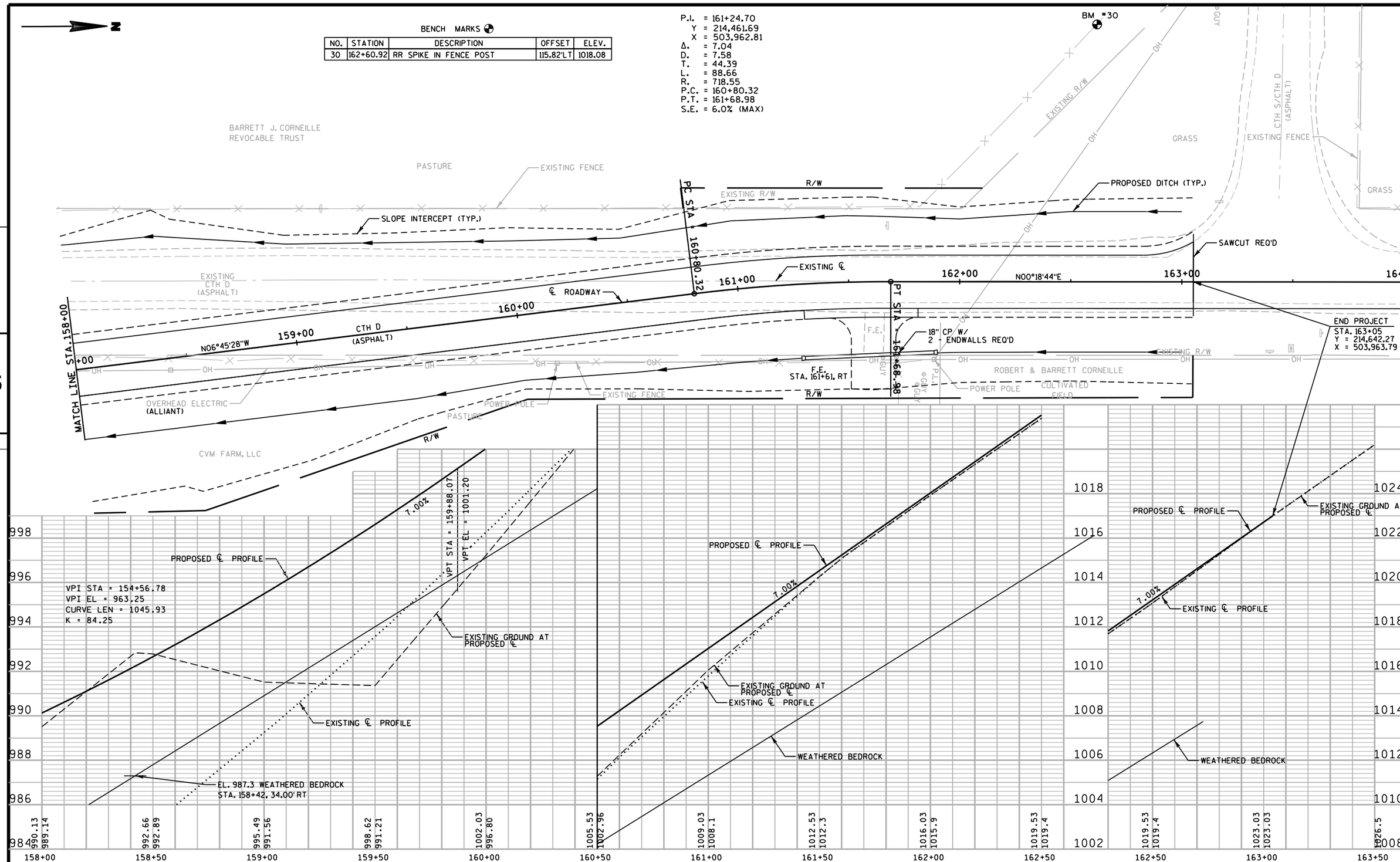

PROJECT NO:5648-00-72	HWY:CTH D	COUNTY:LAFAYETTE	PLAN AND PROFILE	SHEET 57	E

P.I. = 202+58.36
Y = 213,366.90
X = 504,235.55
Δ. = 20.33
D. = 15.29
T. = 67.12
L. = 132.79
R. = 370.00
P.C. = 201+91.24
P.T. = 203+24.04

N

CTH D (ASPHALT)
151+00
S67°19'06"E
201+00
202+00
203+00
204+00
205+00
206+00
R/W
EXISTING R/W
EXISTING CTH D (ASPHALT)
STA. 151+18.80=
STA. 200+00.00
PC STA = 201+91.24
48" CP W/
2 - ENDWALLS REQ'D
25° SKEW
STA. 202+61.35=
STA. 500+00.00
EXISTING 48" ϕ
CMP CULVERT PIPE (REMOVE)
500+00
SLOPE INTERCEPT (TYP.)
END CONSTRUCTION
STA. 204+00
Y = 213,361.61
X = 504,378.53
POWER POLE
GUY
OH
CVM FARM, LLC
ENGLISH HOLLOW ROAD
(ASPHALT)
S87°52'55"E
PT STA = 203+24.04
OVERHEAD ELECTRIC
(ALLIANT)
PT STA = 499+76.72
F.E.
STA. 200+38, RT
PC STA = 498+
DRIVEWAY GRATE
(REMOVE)
PRECAST CONCRETE CATTLEGUARD
18" CP W/
2 - ENDWALLS REQ'D
10° SKEW
EXISTING 15" ϕ CMP
CULVERT PIPE
(REMOVE)
BURIED TELEPHONE
(CENTURYLINK)
JOHN C. HUBBARD
21695 ENGLISH HOLLOW ROAD
MINERAL POINT, WI 53565

5

5

EARTHWORK SUMMARY
STA. 200+50 - STA. 204+00

COMMON EXC.	793 C.Y.
FILL	1459 C.Y.
FILL EXPANSION	25%
WASTE	0 C.Y.

988
986
984
982
980
978
976
974
972

VPI STA = 200+16.00
VPI EL = 986.14
CURVE LEN = 0.00

VPI STA = 200+86.00
VPI EL = 986.84
CURVE LEN = 104.00
K = 13.00

6.00%
1.00%
-1.00%
3.02%

VPC STA = 200+34.00
VPC EL = 986.32
VPT STA = 201+38.00
VPT EL = 983.20
VPC STA = 201+63.40
VPC EL = 981.42

VPI STA = 202+68.40
VPI EL = 974.07
CURVE LEN = 210.01
K = 20.95

VPT STA = 203+73.41
VPT EL = 977.25

PROPOSED ℄ PROFILE
EXISTING GROUND AT PROPOSED ℄
PROPOSED INVERT WILL BE 1-FOOT
BELOW THE EXISTING STREAM BED
48" CP W/ ENDWALLS REQ'D

985.18
986.38 993.37
985.30 985.05
982.36 978.53
979.18 974.65
977.15 973.40
976.31 974.58
976.67 976.24
977.90 977.90

200+00
200+50
201+00
201+50
202+00
202+50
203+00
203+50
204+00
204+50
205+00
205+50
206+00

PROJECT NO:5648-00-72	HWY:CTH D	COUNTY:LAFAYETTE	PLAN AND PROFILE - ENGLISH HOLLOW ROAD	SHEET 58	E

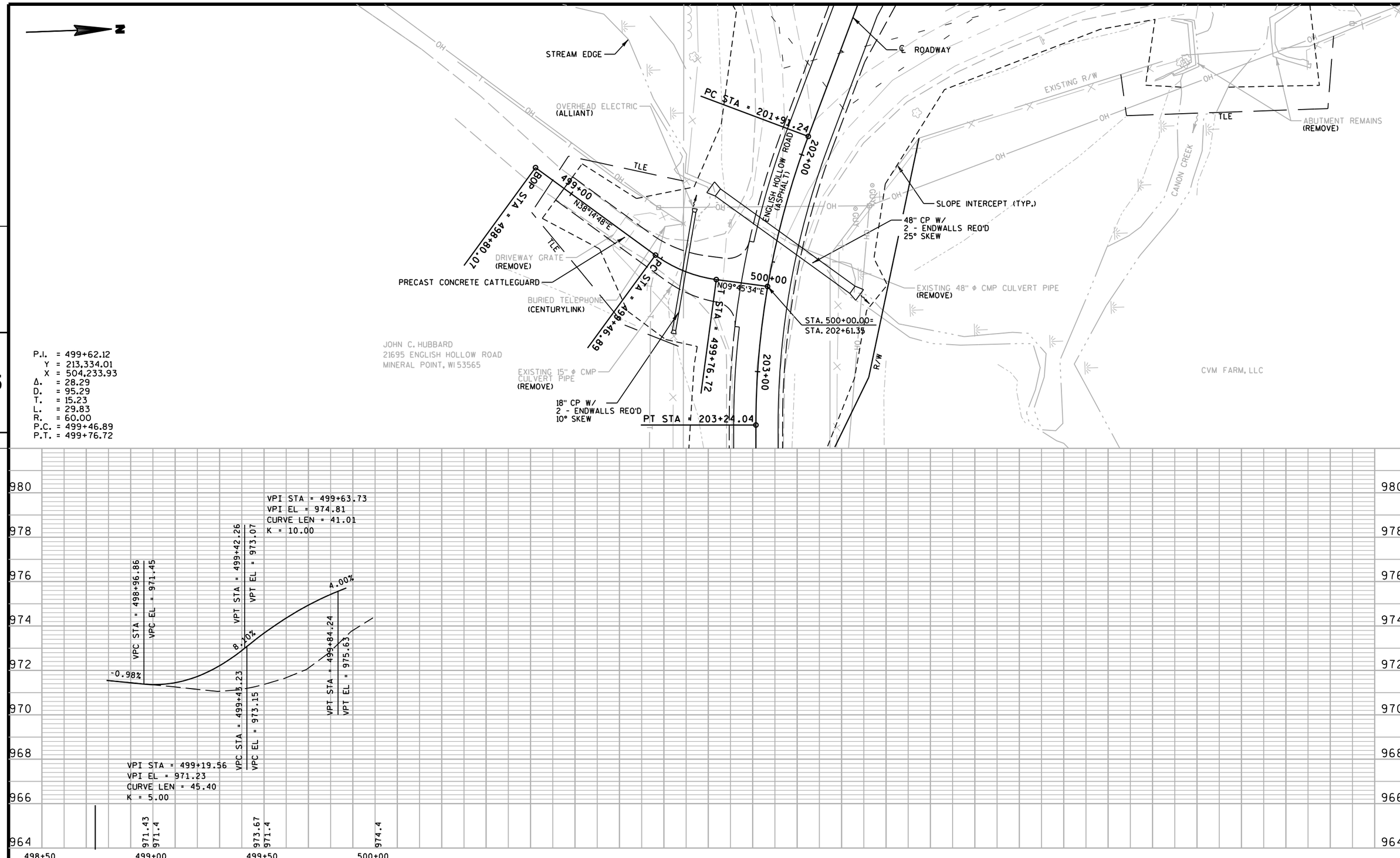

PROJECT NO:5648-00-72	HWY:CTH D	COUNTY:LAFAYETTE	PLAN AND PROFILE - ENGLISH HOLLOW ROAD DRIVEWAY	SHEET 59	E

P.I. = 115+21.81
Y = 211,202.22
X = 501,178.11
Δ. = 59.40
D. = 6.44
T. = 487.58
L. = 885.36
R. = 850.00
P.C. = 110+34.22
P.T. = 119+19.58
S.E. = 5.8% (MAX)

JAMES & MARY MEYLOR
16209 COUNTY ROAD G
MINERAL POINT, WI 53565

F.E.
STA. 112+57, LT
24" Φ CP
W/ ENDWALLS REQ'D

F.E.
(GRASS)

SLOPE INTERCEPT (TYP.)

FOREST

CVM FARM, LLC

R/W

EXISTING R/W

EXISTING
CTH D
(ASPHALT)

EXISTING 18" Φ CMP CULVERT PIPE (TO REMAIN)

TLE

CVM FARM, LLC

P.E.
STA. 117+00, LT
24" Φ CP
W/ ENDWALLS REQ'D

WOODS

EXISTING 18" Φ
CMP CULVERT PIPE
(REMOVE)

R/W

LAWN

116+00

115+00

114+00

113+00

+00

STA. 116+13.83, 33.95' LT
INLET MEDIAN 2 GRATE
INLET COVER TYPE MS (2)
SINGLE SLOPE

1.1

CTH D
(ASPHALT)

STA. 116+97.80=
STA. 300+00

117+00

℄ ROADWAY

36" Φ CP W/
1 - ENDWALL REQ'D

POWER POLE

PASTURE

PROPOSED DITCH (TYP.)

MATCH LINE STA. 112+00

MATCH LINE STA. 118+00

POWER POLE

R/W

POWER POLE

EXISTING FENCE

OVERHEAD ELECTRIC
(ALLIANT)

WOODS

R/W

BURIED TELEPHONE
(CENTURYLINK)

CVM FARM, LLC

WOODS

5

5

VPI STA = 300+41.00
VPI EL = 1054.32
CURVE LEN = 23.52
K = 4.63

5.80%

0.08%

-5.00%

3.71%

VPC STA = 300+29.24
VPC EL = 1054.31

VPT STA = 300+52.76
VPT EL = 1053.73

VPC STA = 300+63.38
VPC EL = 1053.20

VPT STA = 300+98.23
VPT EL = 1052.98

VPI STA = 300+80.81
VPI EL = 1052.33
CURVE LEN = 34.85
K = 4.00

1060
1058
1056
1054
1052
1050
1048
1046
1044

1050.0
1054.31
1050.5
1053.86
1051.2
1053.0
1054.3
1055.8
1058.0

300+00
300+50
301+00
301+50

PROJECT NO:5648-00-72	HWY:CTH D	COUNTY:LAFAYETTE	PLAN AND PROFILE - STA. 117+00 DRIVEWAY	SHEET 60	E

Standard Detail Drawing List

08A05-16B	INLET COVERS TYPE B, B-A, C, MS, MS-A, & WM
08A05-17C	INLET COVERS TYPE F, HM, HM-S, S, T, V, HM-GJ, & HM-GJ-S
08C07-01	INLETS 2X2-FT, 2X2.5-FT, 2X3-FT AND 2.5X3-FT
08C08-01	INLETS MEDIAN 1 AND 2 GRATE
08D01-17	CONCRETE CURB, CONCRETE CURB AND GUTTER AND TIES
08D04-05	CONCRETE SURFACE DRAINS & ASPHALTIC FLUMES
08E08-03	TYPICAL INSTALLATIONS OF EROSION BALES / TEMPORARY DITCH CHECKS
08E09-06	SILT FENCE
08E10-02	INLET PROTECTION TYPE A, B, C AND D
08E14-01	TRACKING PAD
08F01-11	APRON ENDWALLS FOR CULVERT PIPE
08F03-03	DETAILS FOR PIPE CATTLE PASS, CONCRETE ENDWALLS AND STEPS
08F04-07	JOINT TIES FOR CONCRETE PIPE AND CONCRETE COLLAR DETAIL
09A01-12A	AT-GRADE SIDE ROAD INTERSECTION, TYPES "B1", "B2", "C" AND D AND TEE INTERSECTION BYPASS LANE
12A03-10	NAME PLATE (STRUCTURES)
13B02-06	CONCRETE PAVEMENT APPROACH SLAB
14B15-07A	STEEL PLATE BEAM GUARD, CLASS "A" INSTALLATION & ELEMENTS
14B15-07B	STEEL PLATE BEAM GUARD, CLASS "A" INSTALLATION & ELEMENTS
14B18-06A	STEEL PLATE BEAM GUARD, CLASS "A" (AT BRIDGES, OBSTACLES AND SIDEROADS/DRIVEWAYS)
14B42-02A	MIDWEST GUARDRAIL SYSTEM (MGS) GUARDRAIL
14B42-02B	MIDWEST GUARDRAIL SYSTEM (MGS) GUARDRAIL
14B42-02C	MIDWEST GUARDRAIL SYSTEM (MGS) GUARDRAIL
14B43-01A	MIDWEST GUARDRAIL SYSTEM LONG SPAN MGS (L)
14B43-01B	MIDWEST GUARDRAIL SYSTEM LONG SPAN MGS (L)
14B43-01C	MIDWEST GUARDRAIL SYSTEM LONG SPAN MGS (L)
14B43-02A	MIDWEST GUARDRAIL SYSTEM LONG SPAN MGS (L)
14B43-02B	MIDWEST GUARDRAIL SYSTEM LONG SPAN MGS (L)
14B43-02C	MIDWEST GUARDRAIL SYSTEM LONG SPAN MGS (L)
14B44-01A	MIDWEST GUARDRAIL SYSTEM ENERGY ABSORBING TERMINAL (MGS)
14B44-01B	MIDWEST GUARDRAIL SYSTEM ENERGY ABSORBING TERMINAL (MGS)
14B44-01C	MIDWEST GUARDRAIL SYSTEM ENERGY ABSORBING TERMINAL (MGS)
14B45-02A	MIDWEST GUARDRAIL SYSTEM THRIE BEAM TRANSITION (MGS)
14B45-02B	MIDWEST GUARDRAIL SYSTEM THRIE BEAM TRANSITION (MGS)
14B45-02C	MIDWEST GUARDRAIL SYSTEM THRIE BEAM TRANSITION (MGS)
14B45-02D	MIDWEST GUARDRAIL SYSTEM THRIE BEAM TRANSITION (MGS)
14B45-02E	MIDWEST GUARDRAIL SYSTEM THRIE BEAM TRANSITION (MGS)
14B45-02F	MIDWEST GUARDRAIL SYSTEM THRIE BEAM TRANSITION (MGS)
14B45-02G	MIDWEST GUARDRAIL SYSTEM THRIE BEAM TRANSITION (MGS)
14B45-02H	MIDWEST GUARDRAIL SYSTEM THRIE BEAM TRANSITION (MGS)
14B45-02I	MIDWEST GUARDRAIL SYSTEM THRIE BEAM TRANSITION (MGS)
14B45-02J	MIDWEST GUARDRAIL SYSTEM THRIE BEAM TRANSITION (MGS)
15A01-11	MARKER POST FOR RIGHT-OF-WAY
15A03-01	MARKER POSTS, FLEXIBLE, FOR CULVERT END
15A04-01	FLEXIBLE DELINEATOR POST
15C02-04A	BARRICADES AND SIGNS FOR MAINLINE CLOSURES
15C02-04B	BARRICADES AND SIGNS FOR MAINLINE CLOSURES
15C03-01	BARRICADES AND SIGNS FOR SIDEROAD CLOSURES
15C06-05	SIGNING & MARKING FOR TWO LANE BRIDGES
15C08-14A	PAVEMENT MARKING (MAINLINE)
15C08-14B	PAVEMENT MARKING (INTERSECTIONS)

6

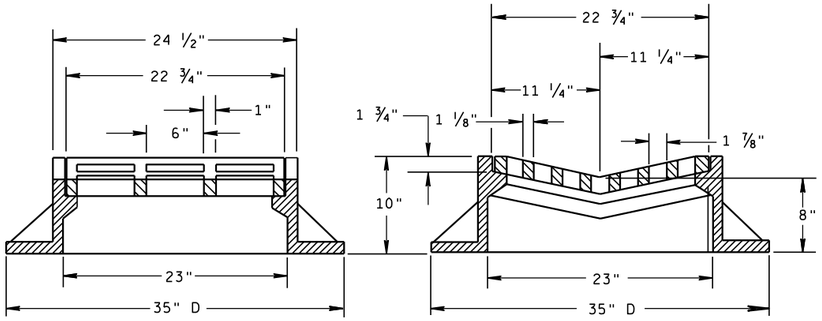

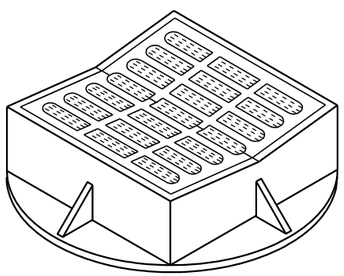

TYPE "B"

(APPROXIMATE WEIGHT 395 LBS.)

FRAME..... 285 LBS.
GRATE..... 110 LBS.

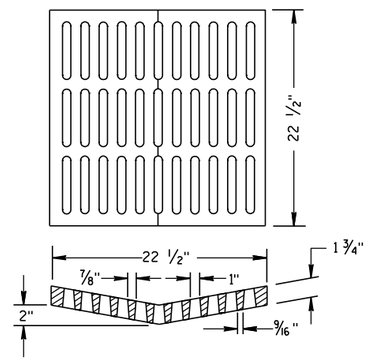

ALTERNATIVE GRATE FOR TYPE "B" COVER

(APPROXIMATE GRATE WEIGHT 125 LBS.)
GRATE.....125 LBS.

USE WHERE PEDESTRIAN OR BICYCLE TRAFFIC IS POSSIBLE.

NOTED AS TYPE B-A ON THE DRAINAGE TABLE

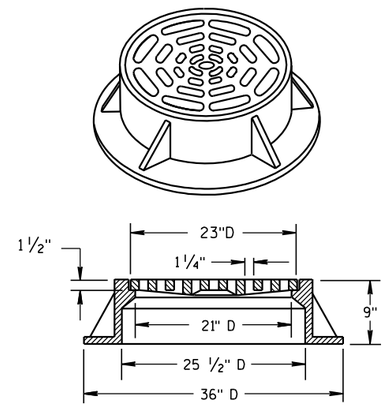

TYPE "C"

(APPROXIMATE WEIGHT 340 LBS.)

FRAME..... 235 LBS.
GRATE..... 105 LBS.

GENERAL NOTES

DETAILS OF CONSTRUCTION, MATERIALS AND WORKMANSHIP NOT SHOWN ON THIS DRAWING SHALL CONFORM TO THE PERTINENT REQUIREMENTS OF THE STANDARD SPECIFICATIONS AND THE APPLICABLE SPECIAL PROVISIONS.

DETAIL DRAWINGS FOR PROPOSED ALTERNATE DESIGNS FOR CATCH BASIN, MANHOLE AND INLET COVERS SHALL BE SUBMITTED TO THE ENGINEER FOR APPROVAL PROVIDING THAT SUCH ALTERNATE DESIGNS MAKE PROVISION FOR EQUIVALENT CAPACITY AND STRENGTH.

ROUND FRAMES AND COVERS SHALL HAVE CONTINUOUSLY MACHINED BEARING SURFACES TO PREVENT ROCKING AND RATTLING.

THE ACTUAL WEIGHT OF COVERS MAY VARY WITHIN 5 PERCENT, PLUS OR MINUS, OF THE APPROXIMATE WEIGHT.

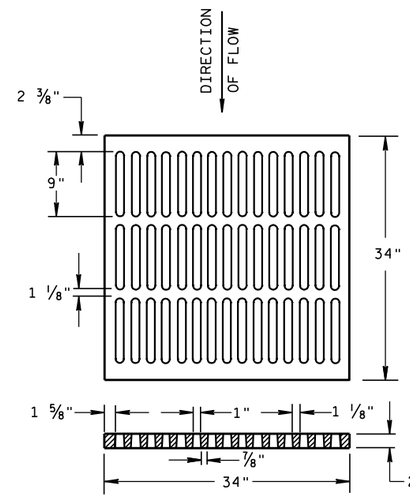

ALTERNATIVE TYPE "MS"

(APPROXIMATE GRATE WEIGHT 365 LBS.)
GRATE.....365 LBS.

USE WHERE PEDESTRIAN OR BICYCLE TRAFFIC IS PERMITTED

NOTED AS TYPE MS-A ON THE DRAINAGE TABLE

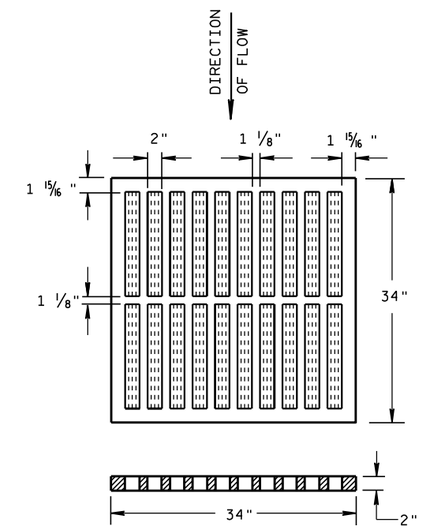

TYPE "MS"

(APPROXIMATE GRATE WEIGHT 270 LBS.)
GRATE.....270 LBS.

USE ON FREEWAYS AND EXPRESSWAYS

NOTED AS TYPE MS ON DRAINAGE TABLE

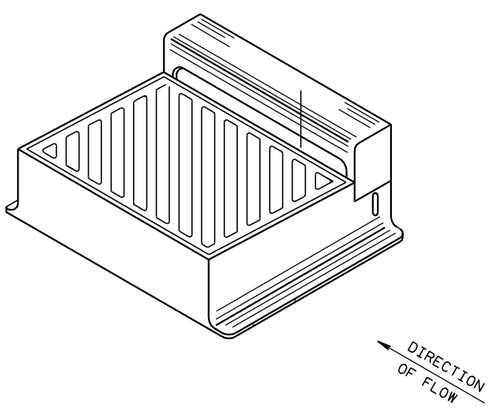

DIAGONAL SLOTS, SHALL BE ORIENTED TO THE DIRECTION OF FLOW AS ILLUSTRATED. GRATES ARE MANUFACTURED TO BE REVERSIBLE.

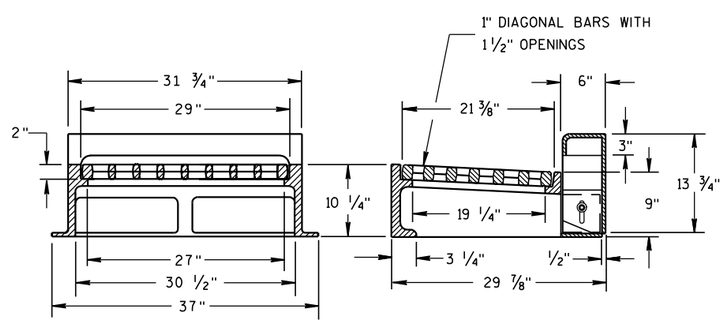

NOTE: CURB BOX HEIGHT ADJUSTABLE 6" TO 9"

TYPE "WM"

(APPROXIMATE WEIGHT 670 LBS.)

FRAME..... 360 LBS.
GRATE..... 160 LBS.
CURB BOX..... 150 LBS.

INLET COVERS
TYPE B, B-A, C, MS, MS-A, & WM

STATE OF WISCONSIN
DEPARTMENT OF TRANSPORTATION

APPROVED
10/4/1999 — DATE
/S/ Rory L. Rhinesmith — CHEIF ROADWAY DEVELOPMENT ENGINEER
FHWA

GENERAL NOTES

DETAILS OF CONSTRUCTION, MATERIALS AND WORKMANSHIP NOT SHOWN ON THIS DRAWING SHALL CONFORM TO THE PERTINENT REQUIREMENTS OF THE STANDARD SPECIFICATIONS AND THE APPLICABLE SPECIAL PROVISIONS.

DETAIL DRAWINGS FOR PROPOSED ALTERNATE DESIGNS FOR INLET COVERS SHALL BE SUBMITTED TO THE ENGINEER FOR APPROVAL PROVIDING THAT SUCH ALTERNATE DESIGNS MAKE PROVISION FOR EQUIVALENT CAPACITY AND STRENGTH.

THE ACTUAL WEIGHT OF COVERS MAY VARY WITHIN 5 PERCENT, PLUS OR MINUS, OF THE APPROXIMATE WEIGHT.

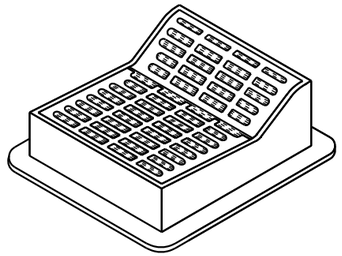

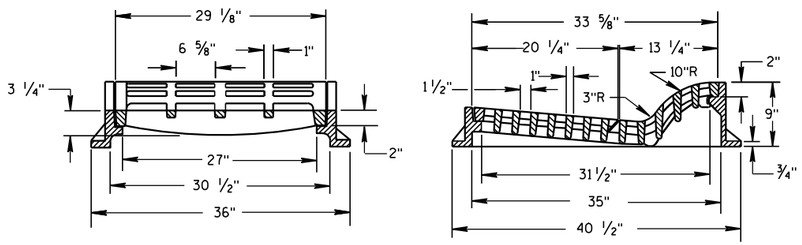

TYPE "F"

(APPROXIMATE WEIGHT 645 LBS.)

FRAME.....300 LBS.
GRATE..... 165 LBS.
GRATE..... 180 LBS.

USE WITH TYPES A & D CONCRETE CURB & GUTTER, 36 INCH.

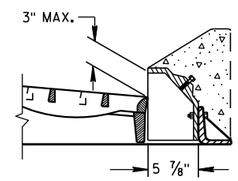

ALTERNATIVE CURB BOX FOR TYPE "HM" COVER

(APPROXIMATE WEIGHT 79 LBS.)
CURB BOX.....79 LBS.

USE WITH TYPES G & J CONCRETE CURB & GUTTER, 30 INCH
NOTED AS TYPE HM-GJ ON DRAINAGE TABLE

NOTE:
SPECIAL GRATE FOR THE
TYPE "H" COVER MAY ALSO BE
USED FOR THE TYPE "HM-GJ" COVER
NOTED AS TYPE HM-GJ-S ON DRAINAGE TABLE

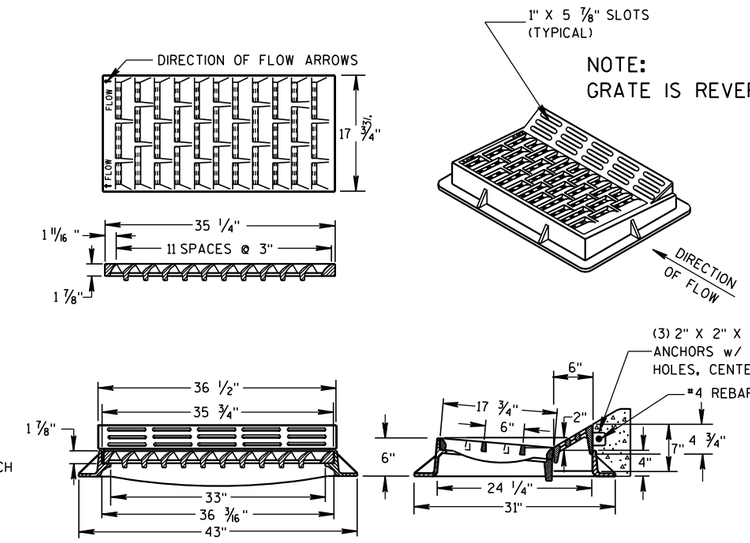

TYPE "HM"

(APPROXIMATE WEIGHT 375 LBS.)

FRAME.....175 LBS.
GRATE.....138 LBS.
CURB BOX..... 62 LBS.

USE WITH TYPES A & D CONCRETE CURB & GUTTER, 36 INCH.

NOTE:
SPECIAL GRATE FOR THE
TYPE "H" COVER MAY ALSO BE
USED FOR THE TYPE "HM" COVER
NOTED AS TYPE HM-S ON DRAINAGE TABLE

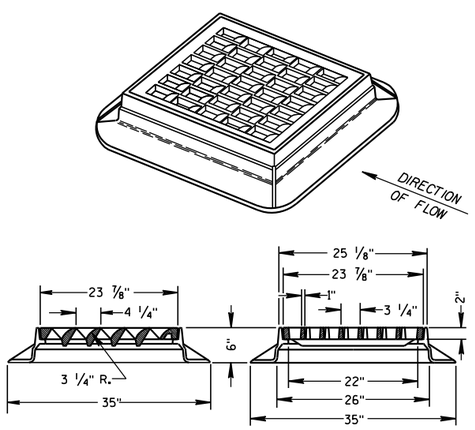

TYPE "S"

(APPROXIMATE WEIGHT 334 LBS.)

FRAME.....165 LBS.
GRATE..... 169 LBS.

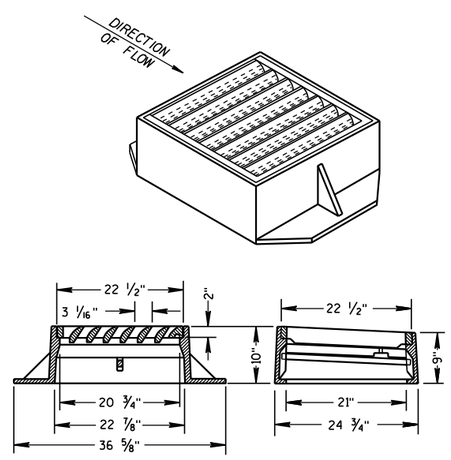

TYPE "V"

(APPROXIMATE WEIGHT 405 LBS.)

FRAME.....270 LBS.
GRATE..... 130 LBS.
SAFETY BAR..... 5 LBS.

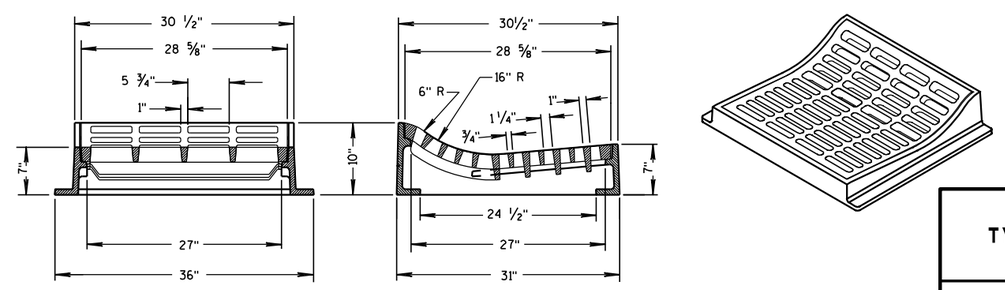

TYPE "T"

(APPROXIMATE WEIGHT 530 LBS.)

FRAME.....270 LBS.
GRATE.....260 LBS.

USE WITH TYPES R & T CONCRETE CURB & GUTTER, 36 INCH.

INLET COVERS
TYPE F, HM, HM-S, S, T, V, HM-GJ, & HM-GJ-S

STATE OF WISCONSIN
DEPARTMENT OF TRANSPORTATION

APPROVED

1/7/08	/S/ Jerry H. [illegible]	
DATE	ROADWAY STANDARDS DEVELOPMENT ENGINEER	

FHWA

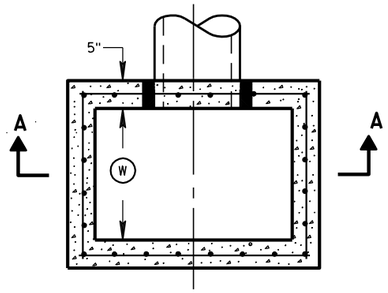

PLAN VIEW

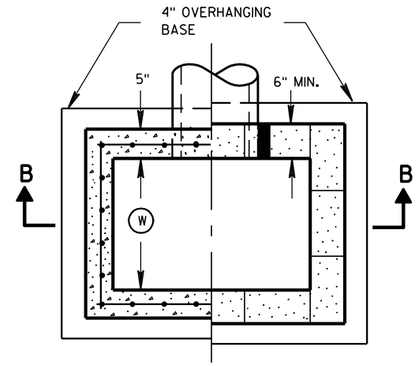

PLAN VIEW

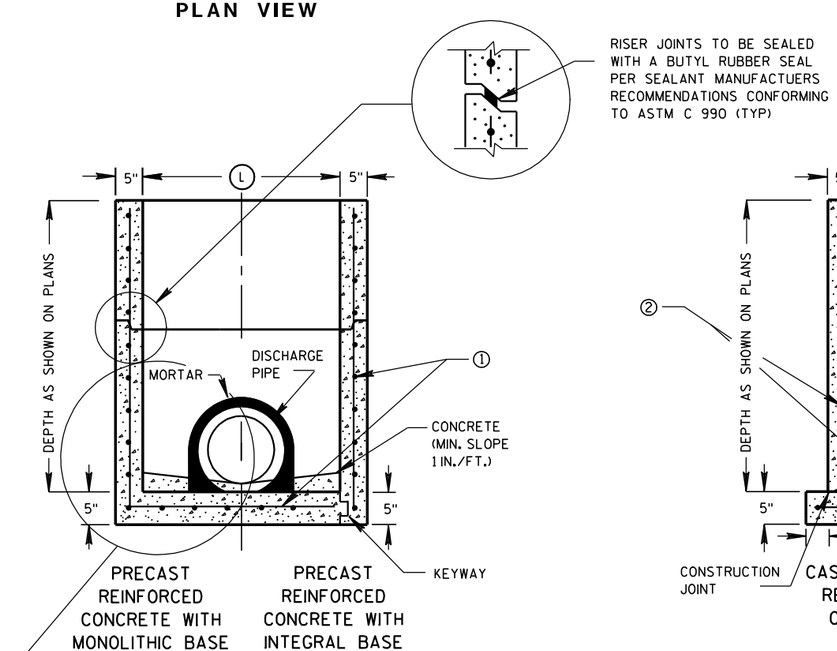

SECTION A-A

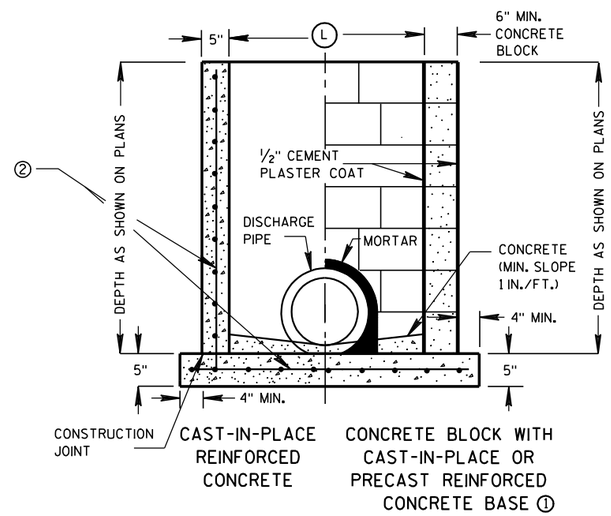

SECTION B-B

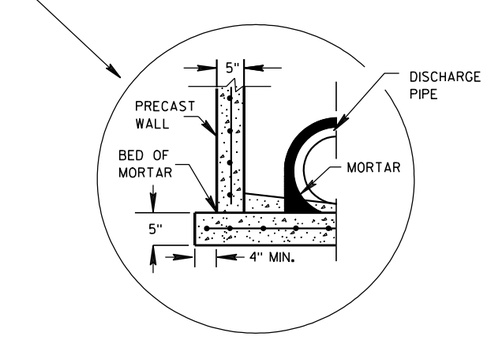

SEPERATE PRECAST REINFORCED CONCRETE BASE OPTION

GENERAL NOTES

DETAILS OF CONSTRUCTION, MATERIALS AND WORKMANSHIP NOT SHOWN ON THIS DRAWING SHALL CONFORM TO THE PERTINENT REQUIREMENTS OF THE STANDARD SPECIFICATIONS AND THE APPLICABLE SPECIAL PROVISIONS.

UNLESS OTHERWISE AUTHORIZED IN WRITING BY THE ENGINEER, THE CONTRACTOR SHALL NOT ORDER AND DELIVER PRECAST INLET UNITS REQUIRED FOR THE PROJECT UNTIL A LIST OF SIZES IS FURNISHED BY THE ENGINEER.

DETAILED DRAWINGS FOR PROPOSED ALTERNATE DESIGNS FOR UNDERGROUND DRAINAGE STRUCTURES SHALL BE SUBMITTED TO THE ENGINEER FOR APPROVAL PROVIDING THAT SUCH ALTERNATE DESIGNS MAKE PROVISION FOR EQUIVALENT CAPACITY AND STRENGTH.

ALL PRECAST INLET UNITS SHALL CONFORM TO THE PERTINENT REQUIREMENTS OF ASTM C 913.

ALL DRAINAGE STRUCTURES ARE DESIGNATED ON THE PLANS AS "MANHOLES 3X3-L", "CATCH BASINS 4-B", "INLETS 2X3-H", ETC. THE FIRST NUMBERS DESIGNATES THE SIZE OF THE STRUCTURE, AND THE FOLLOWING LETTER DESIGNATES THE TYPE OF COVER TO BE USED TO COMPRISE THE COMPLETE UNIT.

BASES SHALL BE PLACED ON A BED OF MATERIAL AT LEAST 6 INCHES IN DEPTH, WHICH MEETS THE REQUIREMENTS OF GRANULAR BACKFILL. THIS BEDDING SHALL BE COMPACTED AND PROVIDE UNIFORM SUPPORT FOR THE ENTIRE AREA OF THE BASE.

ALL BAR STEEL REINFORCEMENT SHALL BE EMBEDDED 2 INCHES CLEAR UNLESS OTHERWISE SHOWN OR NOTED.

PRECAST REINFORCED RISERS SHALL HAVE A TONGUE AND GROOVE JOINT WITH TONGUE UP OR DOWN.

4" OVERHANGING BASES ARE REQUIRED FOR CAST-IN-PLACE REINFORCED CONCRETE AND CONCRETE BLOCK INSTALLATIONS.
4" OVERHANG IS REQUIRED WHEN SEPERATE PRECAST BASE IS PROVIDED.
OVERHANG IS NOT REQUIRED ON PRECAST STRUCTURES WITH AN INTEGRAL OR MONOLITHIC BASE.

MAXIMUM INSIDE PIPE DIAMETER DETERMINED BY 3 INCH CLEARANCE ON EACH SIDE OF THE OUTSIDE WALL OF THE PIPE. SEE DETAIL "A". ASSUMES PIPE ENTERS PERPENDICULAR TO THE STRUCTURE.

① FOR PRECAST INLETS PROVIDE REINFORCING STEEL IN ACCORDANCE TO ASTM C 913.

② CONTRACTOR TO PROVIDE DRAWING(S) STAMPED BY A PROFESSIONAL ENGINEER FOR STEEL REINFORCING DESIGN FOR CAST-IN-PLACE STRUCTURES.

INLET COVER MATRIX

INLET SIZE		INLET COVER TYPE	ALL A'S	ALL B'S	BW	F	ALL H'S	S	T	V	WM
	WIDTH Ⓦ (FT)	LENGTH Ⓛ (FT)									
2X2-FT	2	2	X	X				X		X	
2X2.5-FT	2	2.5			X			X	X	X	X
2X3-FT	2	3					X				
2.5X3-FT	2.5	3				X					

PIPE MATRIX

INLET SIZE	MAXIMUM INSIDE PIPE DIAMETER	
	WIDTH (IN)	LENGTH (IN)
2X2-FT	12	12
2X2.5-FT	12	18
2X3-FT	12	24
2.5X3-FT	18	24

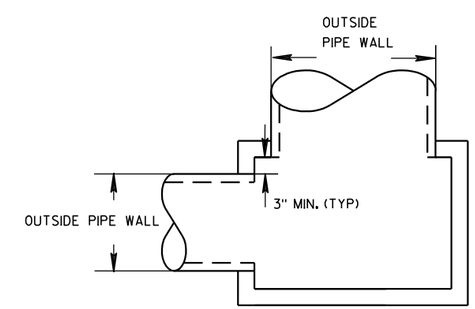

DETAIL "A"

INLETS 2X2-FT, 2X2.5-FT, 2X3-FT AND 2.5X3-FT

INLETS 2X2-FT, 2X2.5-FT, 2X3-FT AND 2.5X3-FT

STATE OF WISCONSIN
DEPARTMENT OF TRANSPORTATION

APPROVED
6/5/2012 — DATE
/S/ Jerry H. Zoda — ROADWAY STANDARDS DEVELOPMENT ENGINEER
FHWA

6

6

S.D.D. 8 C 7-1

S.D.D. 8 C 7-1

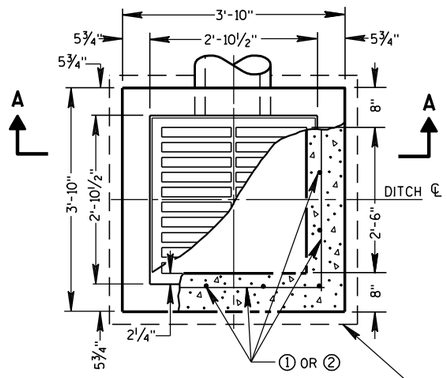

PLAN VIEW

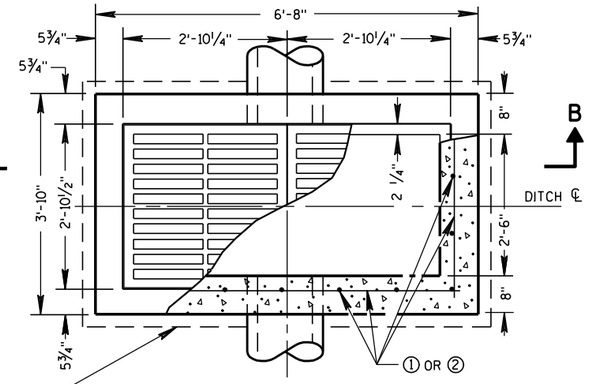

PLAN VIEW

4" OVERHANGING BASE ON REINFORCED CAST-IN-PLACE CONCRETE INLETS

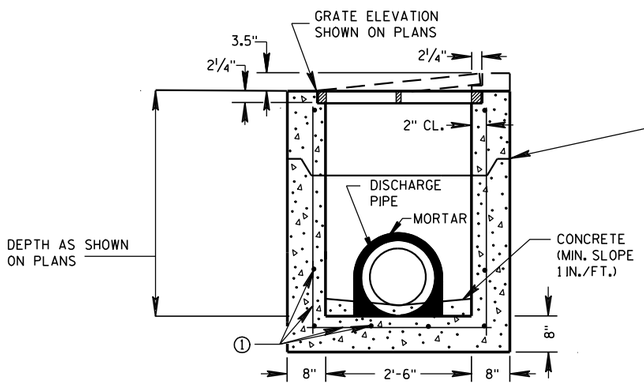

PRECAST REINFORCED CONCRETE SECTION A-A

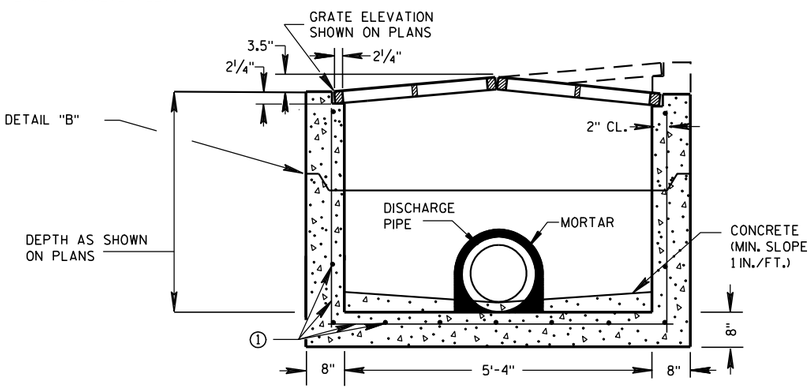

PRECAST REINFORCED CONCRETE SECTION B-B

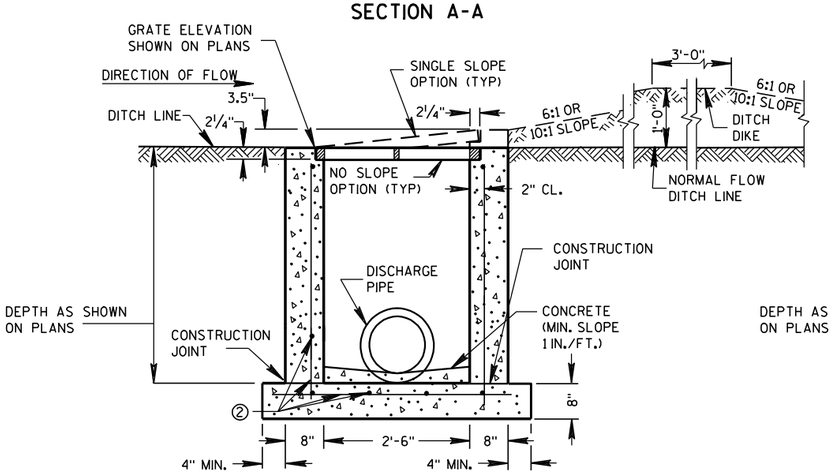

REINFORCED CAST-IN-PLACE CONCRETE SECTION A-A

INLETS MEDIAN 1 GRATE

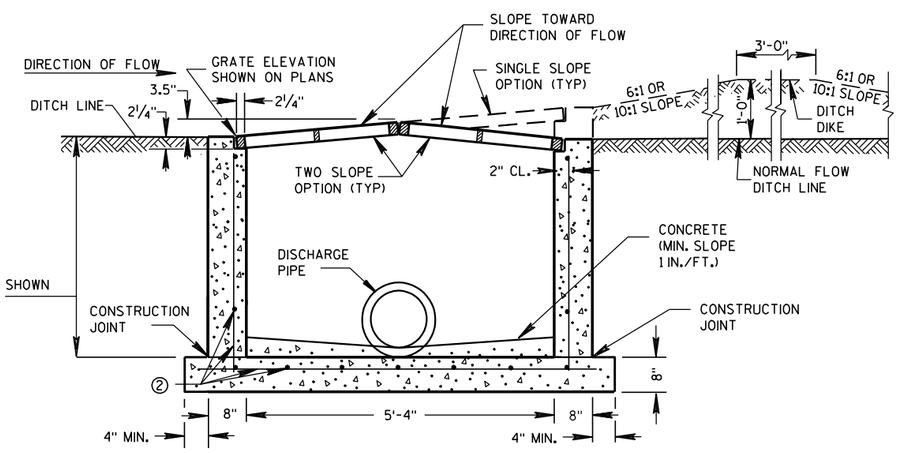

REINFORCED CAST-IN-PLACE CONCRETE SECTION B-B

INLETS MEDIAN 2 GRATE

GENERAL NOTES

DETAILS OF CONSTRUCTION, MATERIALS AND WORKMANSHIP NOT SHOWN ON THIS DRAWING SHALL CONFORM TO THE PERTINENT REQUIREMENTS OF THE STANDARD SPECIFICATIONS AND THE APPLICABLE SPECIAL PROVISIONS.

UNLESS OTHERWISE AUTHORIZED IN WRITING BY THE ENGINEER, THE CONTRACTOR SHALL NOT ORDER AND DELIVER PRECAST INLET UNITS REQUIRED FOR THE PROJECT UNTIL A LIST OF SIZES IS FURNISHED BY THE ENGINEER.

DETAILED DRAWINGS FOR PROPOSED ALTERNATE DESIGNS FOR INLETS WHICH MAY INCLUDE PRECAST REINFORCED CONCRETE INLETS, SHALL BE SUBMITTED TO THE ENGINEER FOR APPROVAL PROVIDING THAT SUCH ALTERNATE DESIGNS MAKE PROVISION FOR EQUIVALENT CAPACITY AND STRENGTH.

ALL MEDIAN INLETS ARE DESIGNATED ON THE PLANS AS "INLETS, 1G-MS", ETC. THE FIRST NUMBER AND LETTER DESIGNATE THE TYPE OF STRUCTURE, AND THE FOLLOWING LETTERS DESIGNATE THE TYPE OF COVER TO BE USED TO COMPRISE THE COMPLETE UNIT.

ALL BAR STEEL REINFORCEMENT SHALL BE EMBEDDED 2 INCHES CLEAR UNLESS OTHERWISE SHOWN OR NOTED.

PRECAST REINFORCED RISERS SHALL HAVE A TONGUE AND GROOVE JOINT WITH TONGUE UP OR DOWN.

ALL PRECAST INLET UNITS SHALL CONFORM TO THE PERTINENT REQUIREMENTS OF ASTM C 913.

MAXIMUM INSIDE PIPE DIAMETER DETERMINED BY 3" CLEARANCE ON EACH SIDE OF THE OUTSIDE WALL OF THE PIPE. SEE DETAIL "A". ASSUMES PIPE ENTERS PERPENDICULAR TO THE STRUCTURE.

① FOR PRECAST INLETS PROVIDE REINFORCING STEEL IN ACCORDANCE TO ASTM C 913.

② CONTRACTOR TO PROVIDE DRAWING(S) STAMPED BY A PROFESSIONAL ENGINEER FOR STEEL REINFORCING DESIGN FOR CAST-IN-PLACE STRUCTURES.

PIPE MATRIX

	MAXIMUM INSIDE PIPE DIAMETER	
INLET SIZE	WIDTH (IN)	LENGTH (IN)
1 GRATE	18	18
2 GRATE	18	42

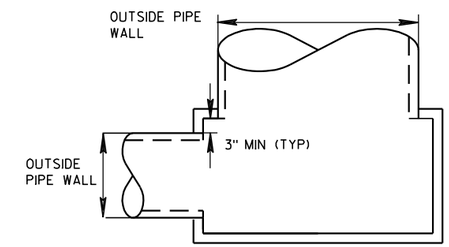

DETAIL "A"

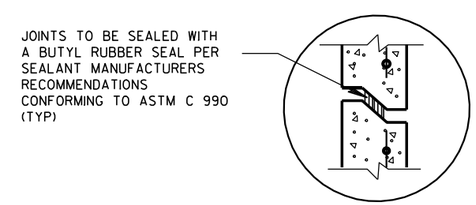

DETAIL "B"

INLETS MEDIAN 1 AND 2 GRATE

STATE OF WISCONSIN
DEPARTMENT OF TRANSPORTATION

APPROVED
6/5/2012 — DATE
/S/ Jerry H. Zogg — ROADWAY STANDARDS DEVELOPMENT ENGINEER
FHWA

6

S.D.D. 8 C 8-1

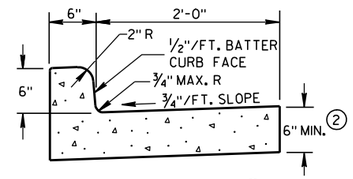

TYPES A & D ①

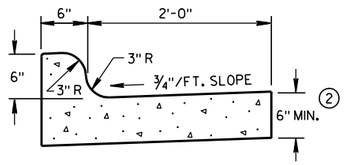

TYPES K & L ①

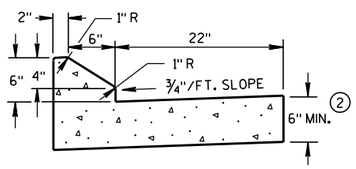

6" SLOPED CURB TYPES G & J ①

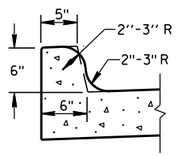

OPTIONAL CURB SHAPE FOR TYPES K & L ①

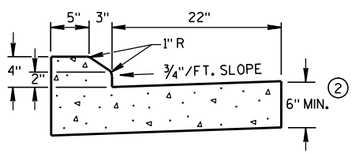

4" SLOPED CURB TYPES G & J ①

CONCRETE CURB & GUTTER 30"

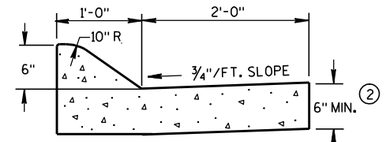

(6" SLOPED CURB)

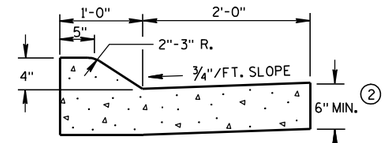

(4" SLOPED CURB)

TYPES A & D ①

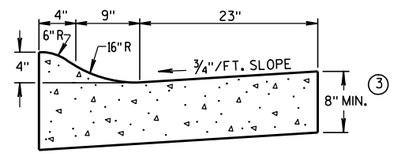

4" SLOPED CURB TYPES R & T ① ④

CONCRETE CURB & GUTTER 36"

GENERAL NOTES

DETAILS OF CONSTRUCTION, MATERIALS AND WORKMANSHIP NOT SHOWN ON THIS DRAWING SHALL CONFORM TO THE PERTINENT REQUIREMENTS OF THE CONTRACT.

PAVEMENT TIES AND TIE BARS SHALL BE EPOXY COATED IN CONFORMANCE WITH SUBSECTION 505.2.6.2 OF THE STANDARD SPECIFICATIONS.

INTEGRAL CURB & GUTTER SHALL CONFORM TO THE DETAILS SHOWN FOR CONCRETE CURB & GUTTER INCLUDING THE TRANSVERSE GUTTER SLOPE. A LONGITUDINAL CONSTRUCTION JOINT IS NOT REQUIRED WITH INTEGRAL CURB AND GUTTER.

WHERE THE TRANSVERSE JOINTS IN THE PAVEMENT ARE REQUIRED TO BE SEALED, THE JOINTS IN THE INTEGRAL CURB AND GUTTER SHALL BE SEALED TO THE FACE OF CURB WITH THE SAME TYPE OF SEALANT. THE COST OF FURNISHING AND INSTALLING THIS SEALANT SHALL BE INCIDENTAL TO THE ITEM CONCRETE CURB AND GUTTER.

UNLESS OTHERWISE SHOWN ON THE TYPICAL CROSS SECTIONS, THE BASE AGGREGATE AND COMMON EXCAVATION LIMITS ARE 2'-0" BEHIND THE BACK OF CURBS.

① TIE BARS ARE REQUIRED FOR CURB AND GUTTER TYPES A, G, K AND R.

② THE BOTTOM OF CURB AND GUTTER MAY BE CONSTRUCTED EITHER LEVEL OR PARALLEL TO THE SLOPE OF THE SUBGRADE OR BASE AGGREGATE PROVIDED A 6" MINIMUM GUTTER THICKNESS IS MAINTAINED.

③ THE BOTTOM OF CURB AND GUTTER MAY BE CONSTRUCTED EITHER LEVEL OR PARALLEL TO THE SLOPE OF THE SUBGRADE OR BASE AGGREGATE PROVIDED A 8" MINIMUM GUTTER THICKNESS IS MAINTAINED.

④ THE FACE OF CURB IS 6" FROM THE BACK OF CURB.

⑤ WHEN REVERSE SLOPE GUTTER IS REQUIRED, THE LOCATION(S) WILL BE SHOWN ELSEWHERE IN THE PLAN.

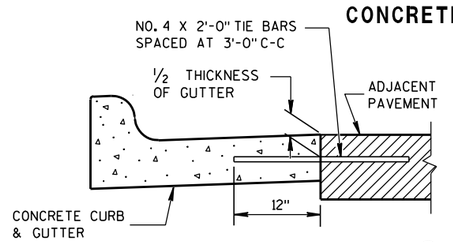

TYPICAL TIE BAR LOCATION ①

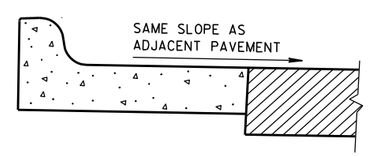

REVERSE SLOPE GUTTER ⑤
(TYPICAL FOR ALL CURB & GUTTER TYPES)

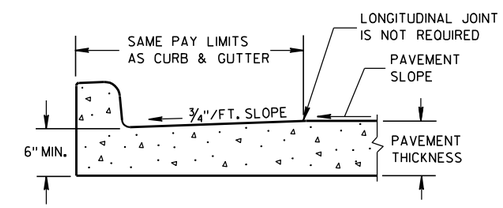

PARTIAL SECTION OF PAVEMENT WITH INTEGRAL CURB & GUTTER

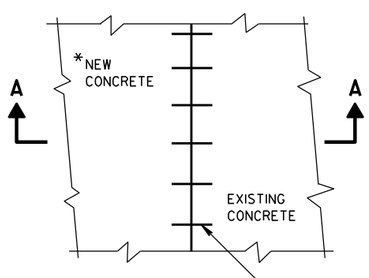

*NEW CURB & GUTTER, SURFACE DRAINS, CONCRETE PAVEMENT OR OTHER NEW CONCRETE.

PLAN VIEW

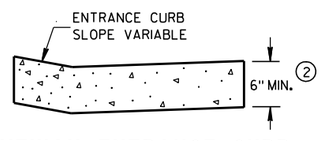

DRIVEWAY ENTRANCE CURB
(WHEN DIRECTED BY THE ENGINEER)

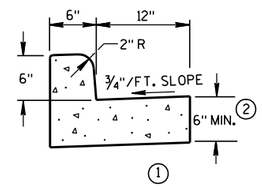

① TYPES A & D

CONCRETE CURB & GUTTER 18"

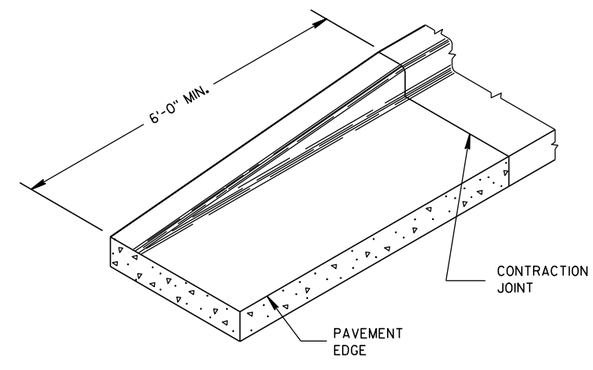

END SECTION CURB & GUTTER

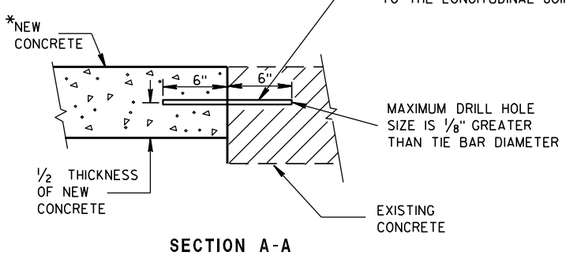

SECTION A-A

TIE BARS DRILLED INTO EXISTING PAVEMENT

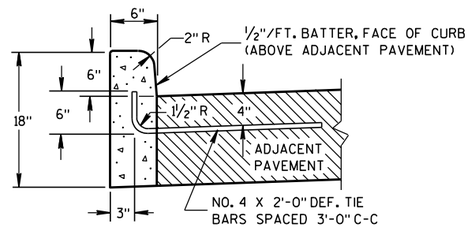

① TYPES A & D

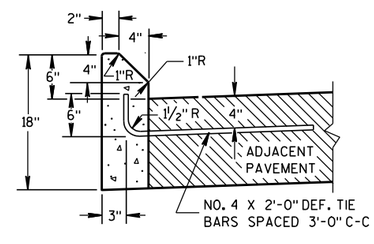

① TYPES G & J

CONCRETE CURB

CONCRETE CURB, CONCRETE CURB & GUTTER AND TIES

STATE OF WISCONSIN
DEPARTMENT OF TRANSPORTATION

APPROVED
9/4/08 — DATE
/S/ Jerry H. ---- — ROADWAY STANDARDS ENGINEER
ENT
FHWA

6

S.D.D. 8 D 1-17

GENERAL NOTES

DETAILS OF CONSTRUCTION, MATERIALS AND WORKMANSHIP NOT SHOWN ON THIS DRAWING SHALL CONFORM TO PERTINENT REQUIREMENTS OF THE STANDARD SPECIFICATIONS AND APPLICABLE SPECIAL PROVISIONS.

WELDED STEEL WIRE FABRIC SHALL BE IN ACCORDANCE WITH AASHTO SPECIFICATION M55.

① JOINTS SHALL BE 1/8 TO 1/4 INCH WIDE BY 1 1/2 INCHES DEEP AND SPACED AT UNIFORM INTERVALS OF APPROXIMATELY 4 FEET.

② GEOTEXTILE FABRIC TYPE "R" SHALL UNDERLAY THE FULL LENGTH AND WIDTH OF THE CONCRETE SURFACE DRAIN AND RIPRAP.

③ CONCRETE SURFACE DRAIN WITHOUT CURB AND GUTTER MAY BE USED ON BACKSLOPES WHEN SPECIFIED

ASPHALTIC FLUME

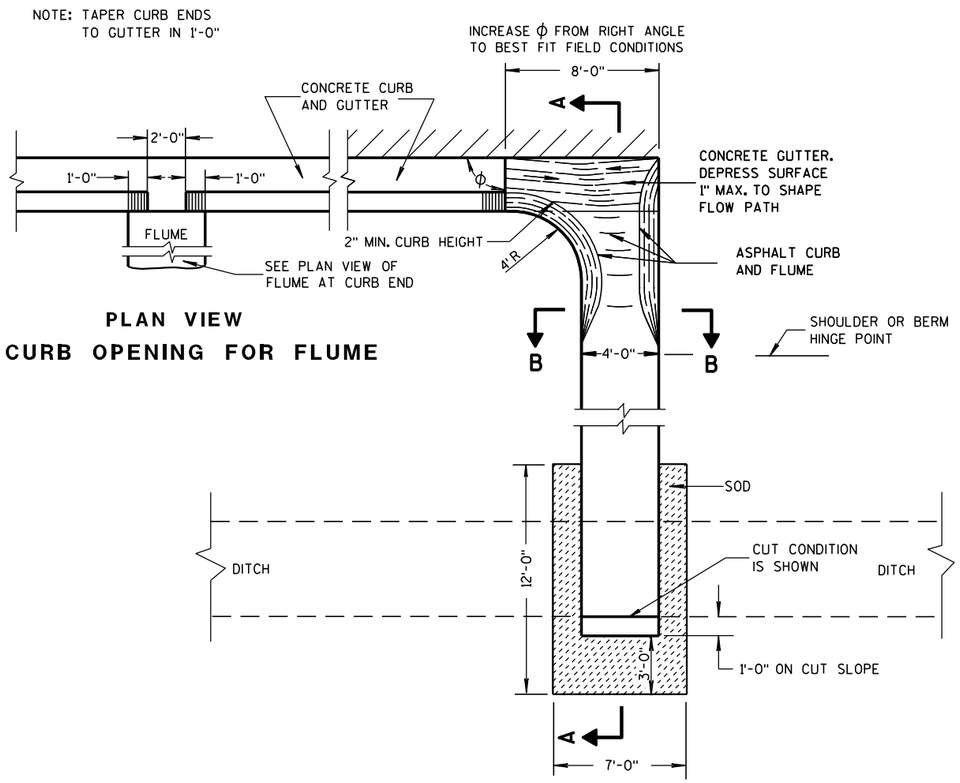

PLAN VIEW
CURB OPENING FOR FLUME

PLAN VIEW
FLUME AT CURB END

③ CONCRETE SURFACE DRAIN

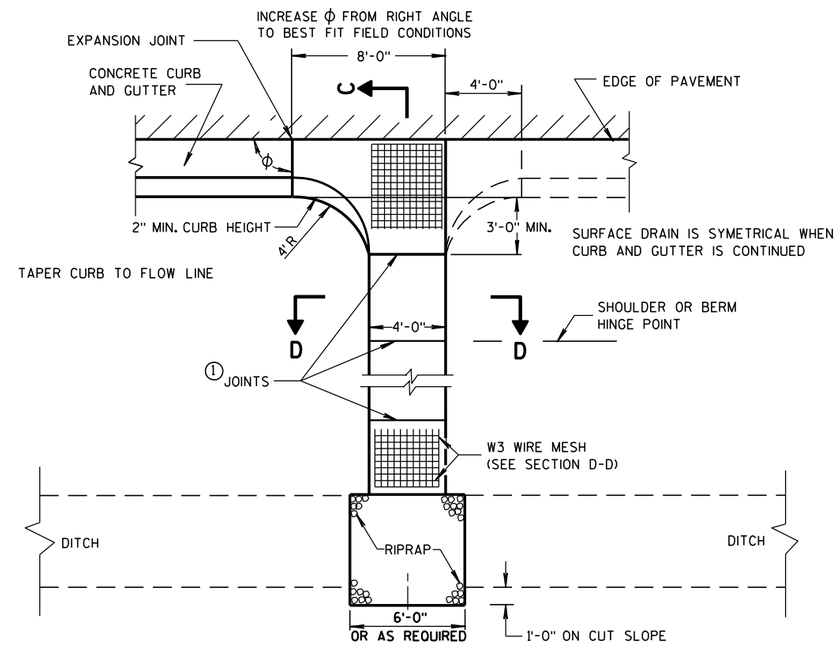

PLAN VIEW

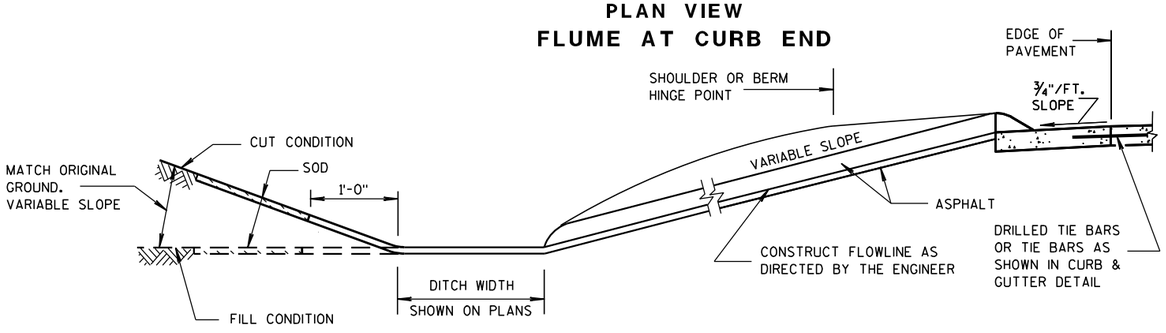

SECTION A-A

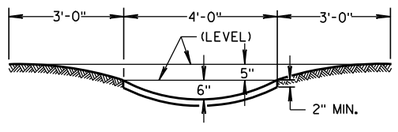

SECTION B-B

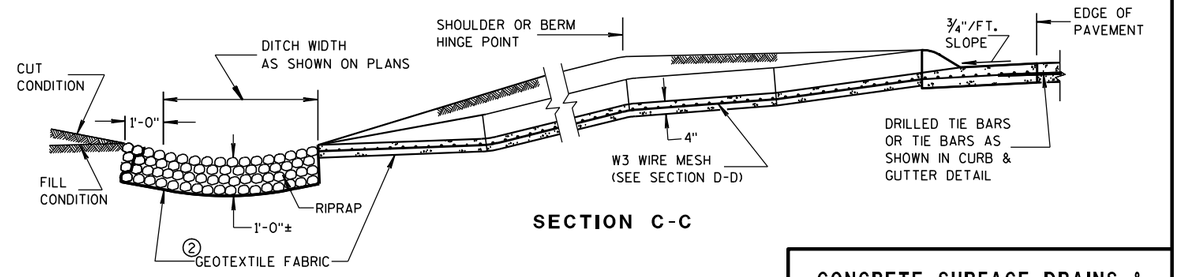

SECTION C-C

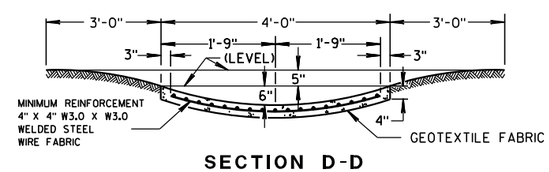

SECTION D-D

CONCRETE SURFACE DRAINS & ASPHALTIC FLUMES

STATE OF WISCONSIN
DEPARTMENT OF TRANSPORTATION

APPROVED
9-4-08 /S/ Jerry H. Zogg
DATE ROADWAY STANDARDS ENGINEER
FHWA

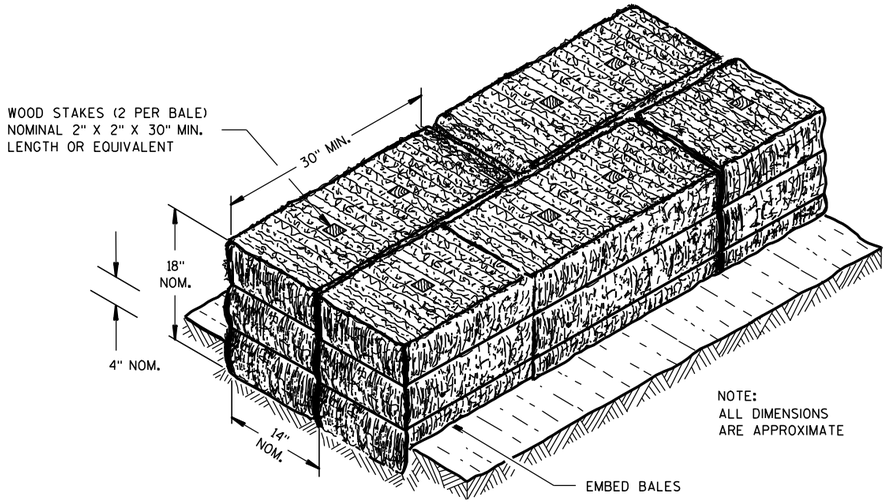

SECTION A-A

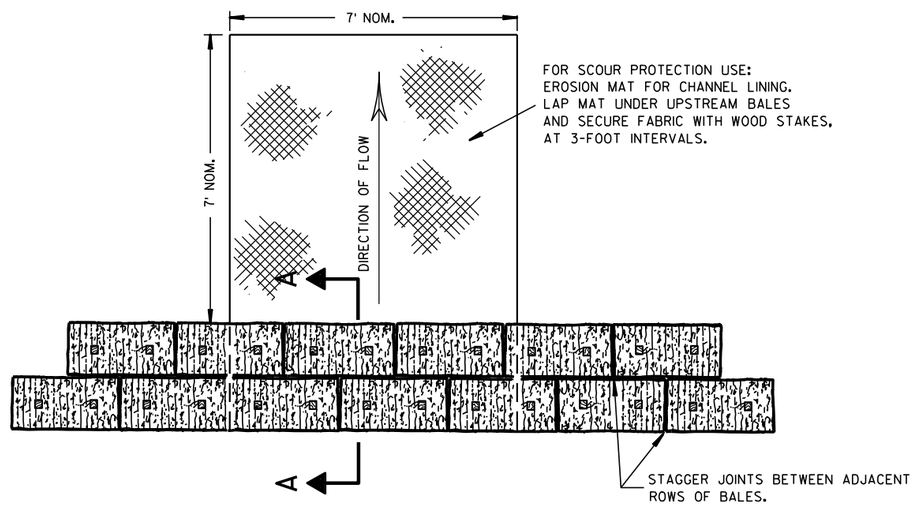

PLAN VIEW

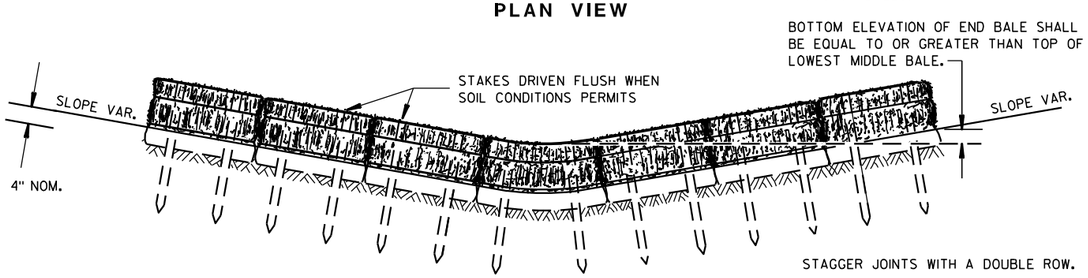

FRONT ELEVATION

TEMPORARY DITCH CHECK USING EROSION BALES ①

GENERAL NOTES

DETAILS OF CONSTRUCTION, MATERIALS AND WORKMANSHIP NOT SHOWN ON THIS DRAWING SHALL CONFORM TO THE PERTINENT REQUIREMENTS OF THE STANDARD SPECIFICATIONS AND THE APPLICABLE SPECIAL PROVISIONS.

① TEMPORARY DITCH CHECKS EITHER EROSION BALES OR MANUFACTURED SHALL BE PAID FOR UNDER THE BID ITEM OF TEMPORARY DITCH CHECK. THE DEPARTMENT WILL NOT PAY FOR TEMPORARY DITCH CHECKS CONSTRUCTED OF A SINGLE ROW OF EROSION BALES.

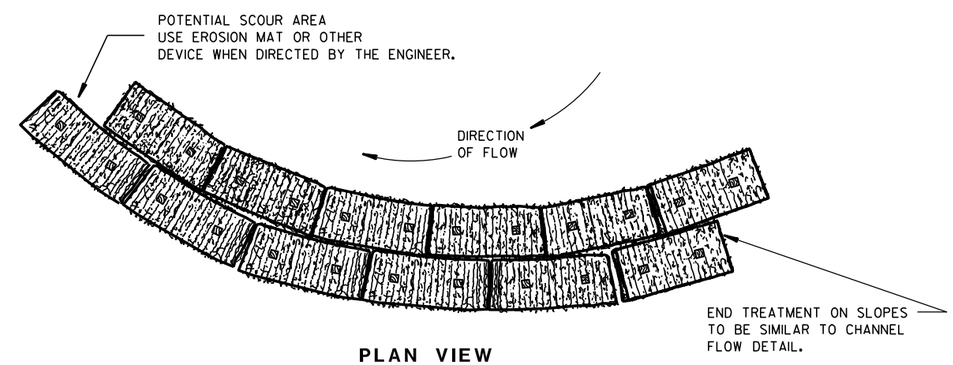

PLAN VIEW

WHEN ALTERING THE DIRECTION OF FLOW

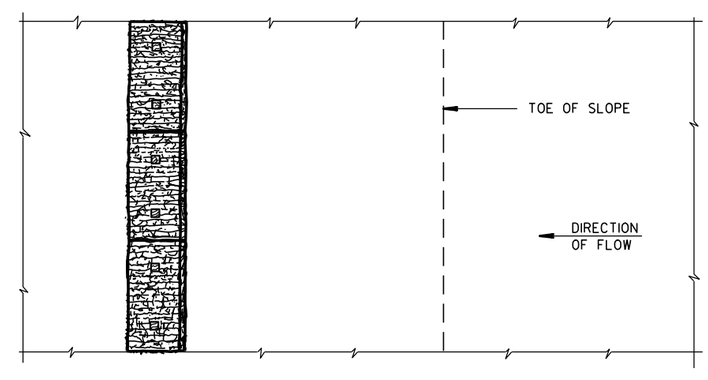

PLAN VIEW

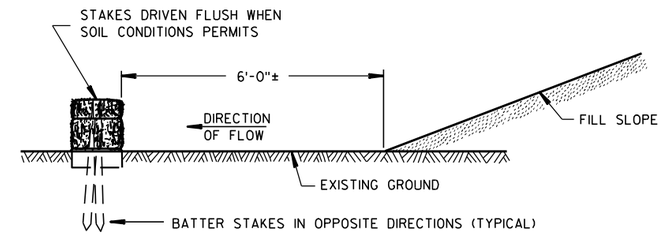

FRONT ELEVATION

WHEN EXISTING GROUND SLOPES AWAY FROM FILL SLOPE

EROSION BALES FOR SHEET FLOW

TYPICAL INSTALLATIONS OF EROSION BALES / TEMPORARY DITCH CHECKS

STATE OF WISCONSIN
DEPARTMENT OF TRANSPORTATION

APPROVED
6/04/02 — DATE
/S/ Beth Cann — CHIEF ROADWAY DEVELOPMENT ENGINEER
FHWA

6

6

S.D.D. 8 E 8-3

S.D.D. 8 E 8-3

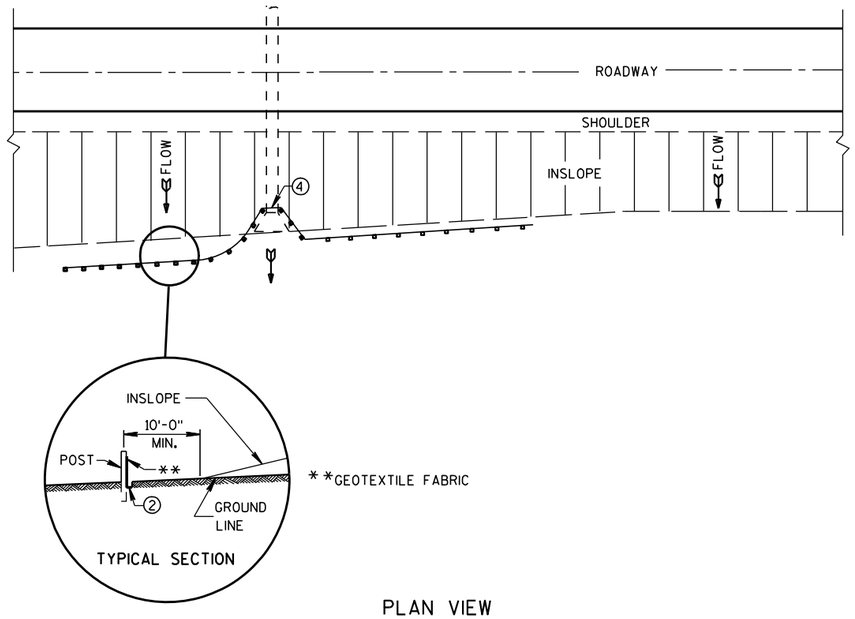

PLAN VIEW

TYPICAL APPLICATION OF SILT FENCE

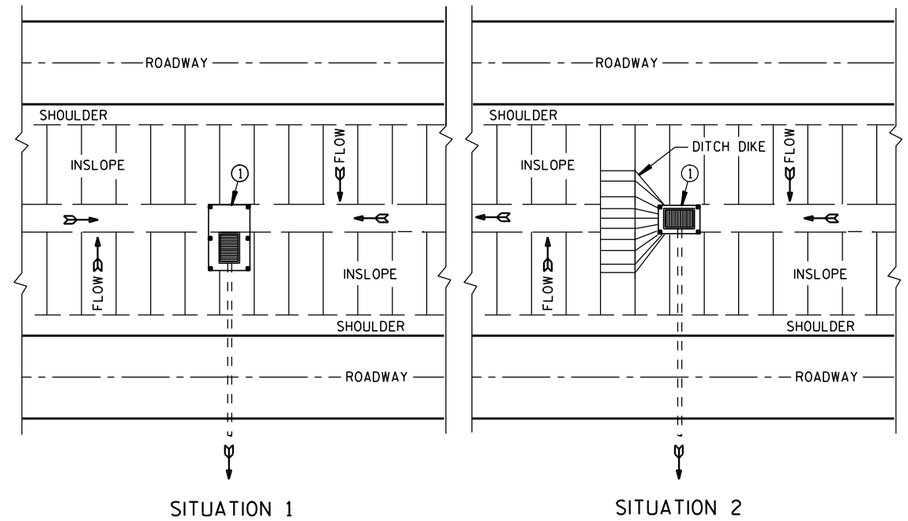

PLAN VIEW

SILT FENCE AT MEDIAN SURFACE DRAINS

GENERAL NOTES

DETAILS OF CONSTRUCTION NOT SHOWN ON THIS DRAWING SHALL CONFORM TO THE PERTINENT REQUIREMENTS OF THE STANDARD SPECIFICATIONS AND APPLICABLE SPECIAL PROVISIONS.

① HORIZONTAL BRACE REQUIRED WITH 2" X 4" WOODEN FRAME OR EQUIVALENT AT TOP OF POSTS.

② FOR MANUAL INSTALLATIONS THE TRENCH SHALL BE A MINIMUM OF 4" WIDE & 6" DEEP TO BURY AND ANCHOR THE GEOTEXTILE FABRIC. FOLD MATERIAL TO FIT TRENCH AND BACKFILL & COMPACT TRENCH WITH EXCAVATED SOIL.

③ WOOD POSTS SHALL BE A MINIMUM SIZE OF 1⅛" X 1⅛" OF OAK OR HICKORY.

④ SILT FENCE TO EXTEND ACROSS THE TOP OF THE PIPE.

⑤ CONSTRUCT SILT FENCE FROM A CONTINUOUS ROLL IF POSSIBLE BY CUTTING LENGTHS TO AVOID JOINTS. IF A JOINT IS NECESSARY USE ONE OF THE FOLLOWING TWO METHODS; A) OVERLAP THE END POSTS AND TWIST, OR ROTATE, AT LEAST 180 DEGREES. B) HOOK THE END OF EACH SILT FENCE LENGTH.

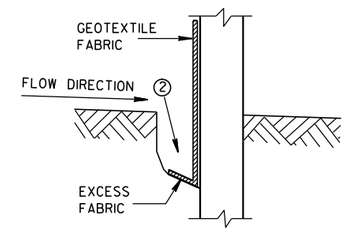

TRENCH DETAIL

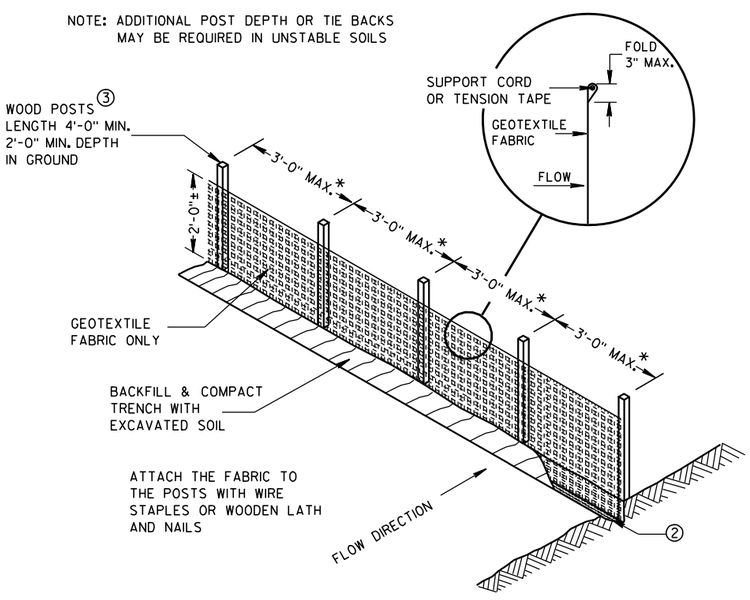

*NOTE: 8'-0" POST SPACING ALLOWED IF A WOVEN GEOTEXTILE FABRIC IS USED.

SILT FENCE

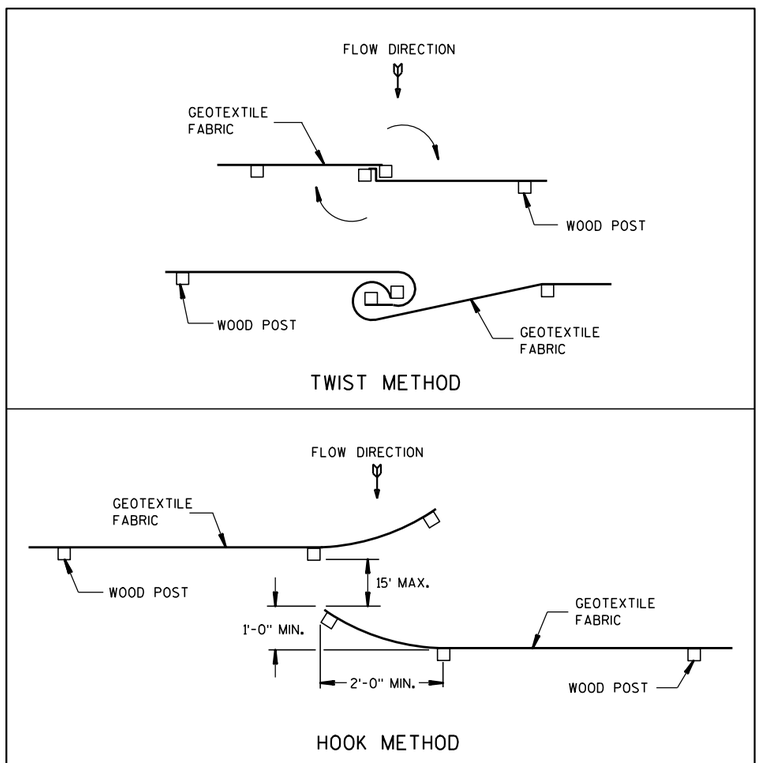

JOINING TWO LENGTHS OF SILT FENCE ⑤

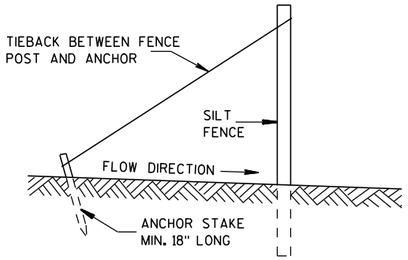

SILT FENCE TIE BACK

(WHEN REQUIRED BY THE ENGINEER)

SILT FENCE
STATE OF WISCONSIN DEPARTMENT OF TRANSPORTATION
APPROVED 4-29-05 /S/ Beth Cann----- DATE CHIEF ROADWAY DEVELOP ENGINEER FHWA

6

6

S.D.D. 8 E 9-6

S.D.D. 8 E 9-6

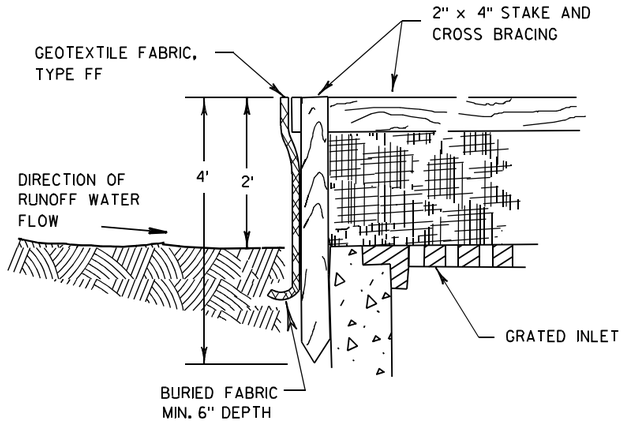

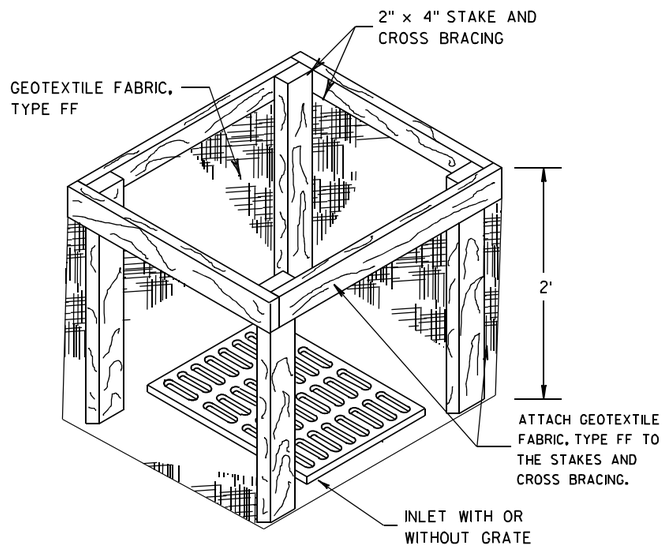

INLET PROTECTION, TYPE A

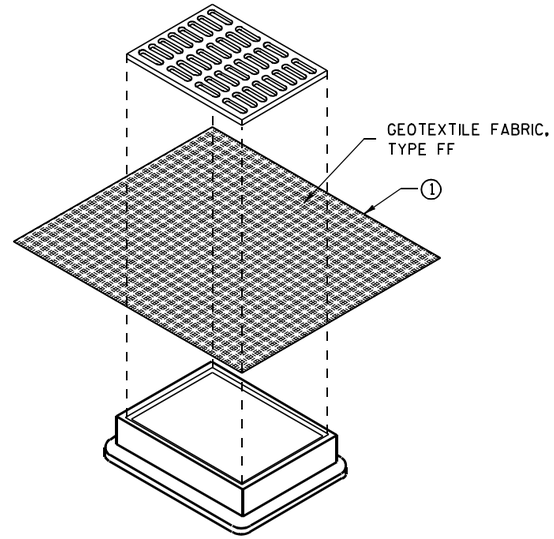

INLET PROTECTION, TYPE B
(WITHOUT CURB BOX)
(CAN BE INSTALLED IN ANY INLET WITHOUT A CURB BOX)

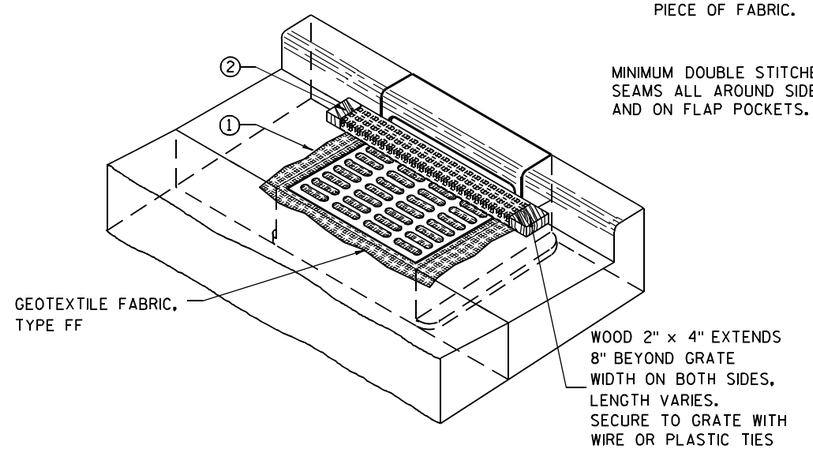

INLET PROTECTION, TYPE C (WITH CURB BOX)

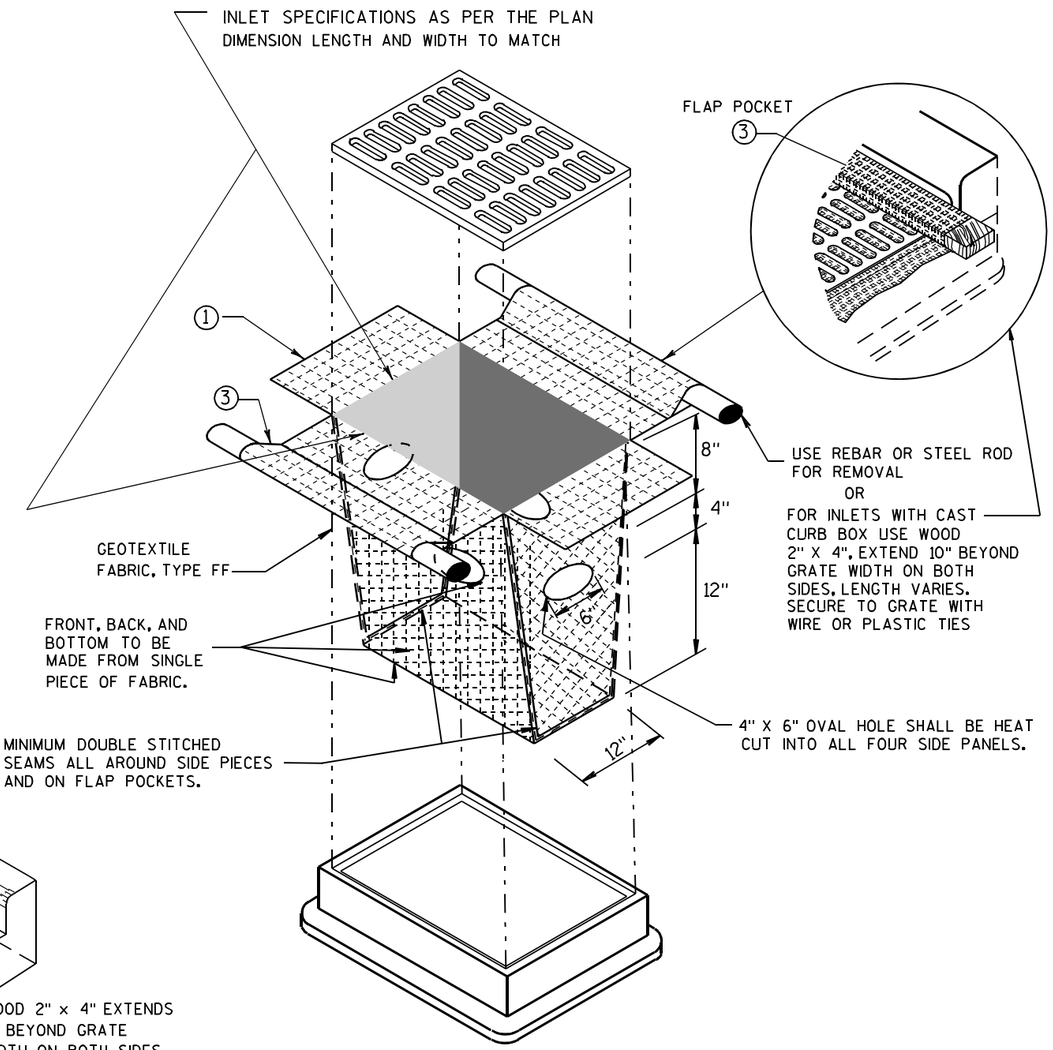

INLET PROTECTION, TYPE D
(CAN BE INSTALLED IN ANY INLET TYPE WITH OR WITHOUT A CURB BOX AS PER NOTE 2)

GENERAL NOTES

INLET PROTECTION DEVICES SHALL BE MAINTAINED OR REPLACED AT THE DIRECTION OF THE ENGINEER.

MANUFACTURED ALTERNATIVES APPROVED AND LISTED ON THE DEPARTMENT'S EROSION CONTROL PRODUCT ACCEPTABILITY LIST MAY BE SUBSTITUTED.

WHEN REMOVING OR MAINTAINING INLET PROTECTION, CARE SHALL BE TAKEN SO THAT THE SEDIMENT TRAPPED ON THE GEOTEXTILE FABRIC DOES NOT FALL INTO THE INLET. ANY MATERIAL FALLING INTO THE INLET SHALL BE REMOVED IMMEDIATELY.

1 FINISHED SIZE, INCLUDING FLAP POCKETS WHERE REQUIRED, SHALL EXTEND A MINIMUM OF 10" AROUND THE PERIMETER TO FACILITATE MAINTENANCE OR REMOVAL.

2 FOR INLET PROTECTION, TYPE C (WITH CURB BOX), AN ADDITIONAL 18" OF FABRIC IS WRAPPED AROUND THE WOOD AND SECURED WITH STAPLES. THE WOOD SHALL NOT BLOCK THE ENTIRE HEIGHT OF THE CURB BOX OPENING.

3 FLAP POCKETS SHALL BE LARGE ENOUGH TO ACCEPT WOOD 2X4.

INSTALLATION NOTES

TYPE B & C

TRIM EXCESS FABRIC IN THE FLOW LINE TO WITHIN 3" OF THE GRATE.

THE CONTRACTOR SHALL DEMONSTRATE A METHOD OF MAINTENANCE, USING A SEWN FLAP, HAND HOLDS OR OTHER METHOD TO PREVENT ACCUMULATED SEDIMENT FROM ENTERING THE INLET.

TYPE D

DO NOT INSTALL INLET PROTECTION TYPE D IN INLETS SHALLOWER THAN 30", MEASURED FROM THE BOTTOM OF THE INLET TO THE TOP OF THE GRATE.

TRIM EXCESS FABRIC IN THE FLOW LINE TO WITHIN 3" OF THE GRATE.

THE INSTALLED BAG SHALL HAVE A MINIMUM SIDE CLEARANCE, BETWEEN THE INLET WALLS AND THE BAG, MEASURED AT THE BOTTOM OF THE OVERFLOW HOLES, OF 3". WHERE NECESSARY THE CONTRACTOR SHALL CINCH THE BAG, USING PLASTIC ZIP TIES, TO ACHIEVE THE 3" CLEARANCE. THE TIES SHALL BE PLACED AT A MAXIMUM OF 4" FROM THE BOTTOM OF THE BAG.

INLET PROTECTION
TYPE A, B, C, AND D

STATE OF WISCONSIN
DEPARTMENT OF TRANSPORTATION

APPROVED
10/16/02 — DATE
/S/ Beth Cannestra — CHIEF ROADWAY DEVELOPMENT ENGINEER
FHWA

6

S.D.D. 8 E 10-2

GENERAL NOTES

DETAILS OF CONSTRUCTION, MATERIALS AND WORKMANSHIP NOT SHOWN ON THIS DRAWING SHALL CONFORM TO THE PERTINENT REQUIREMENTS OF THE STANDARD SPECIFICATIONS AND THE APPLICABLE SPECIAL PROVISIONS.

TRACKING PAD SHALL BE INSPECTED DAILY. DEFICIENT AREAS SHALL BE REPAIRED OR REPLACED IMMEDIATELY.

TRACKING PAD TO BE REMOVED AFTER CONSTRUCTION IS COMPLETED.

TRACKING PAD SHALL BE THE FULL WIDTH OF THE EGRESS POINT.

SURFACE WATER MUST BE PREVENTED FROM PASSING THROUGH THE TRACKING PAD. FLOWS SHALL BE DIVERTED AWAY, AROUND OR CONVEYED UNDER THE TRACKING PAD.

CULVERT PIPE OR OTHER BMP USED TO DIVERT WATER AWAY, AROUND OR UNDER THE TRACKING PAD SHALL BE DESIGNED TO CONVEY THE 2 YEAR - 24 HOUR EVENT.

THE COST OF ADDITIONAL BMP TO DIVERT WATER ARE INCIDENTAL TO THE TRACKING PAD BID ITEM.

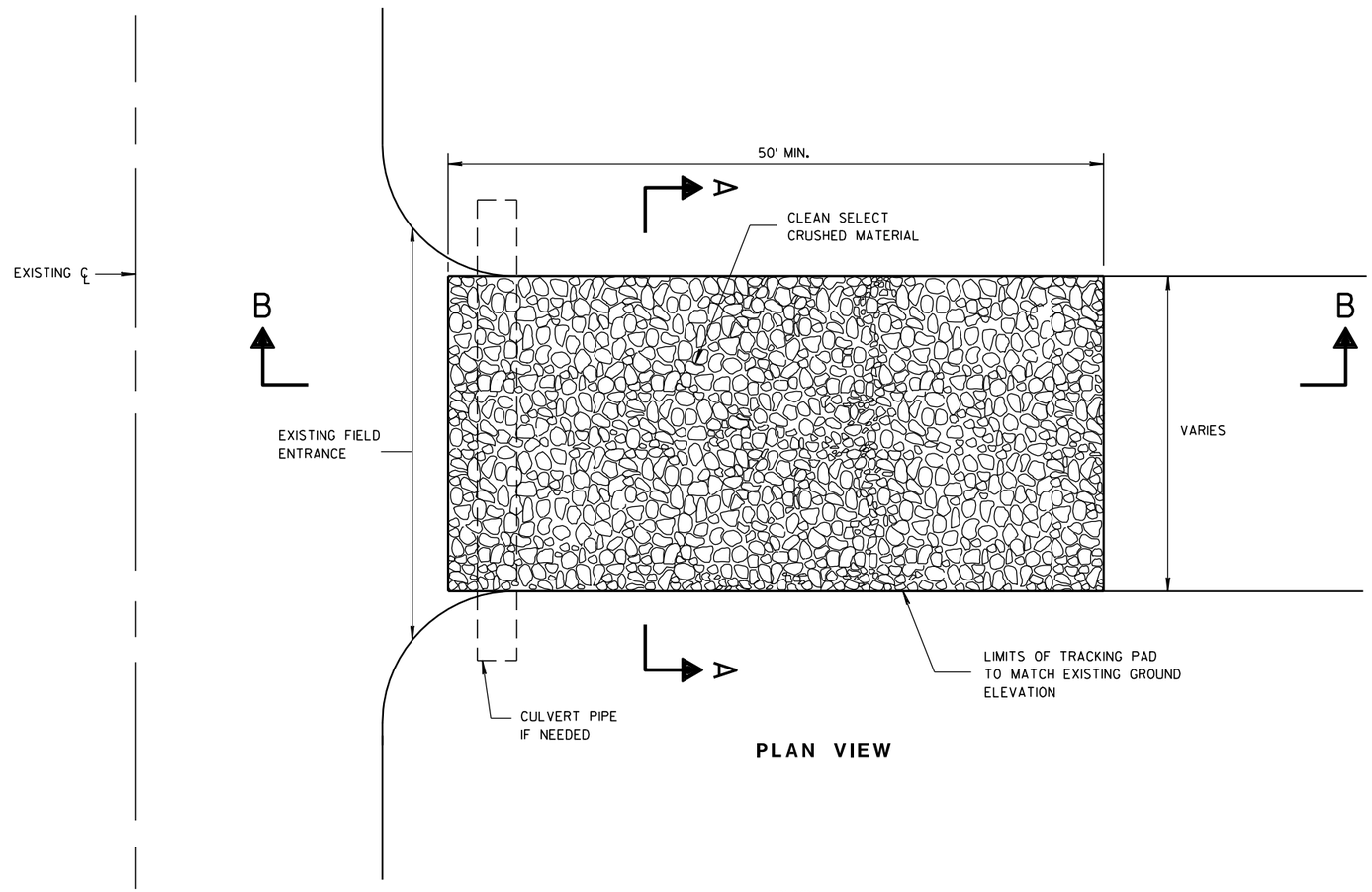

PLAN VIEW

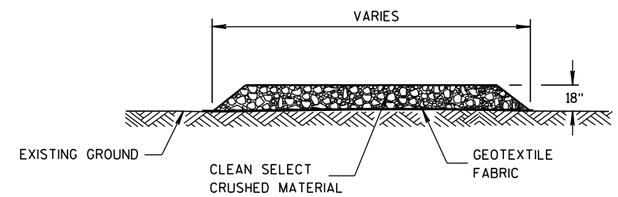

SECTION A-A

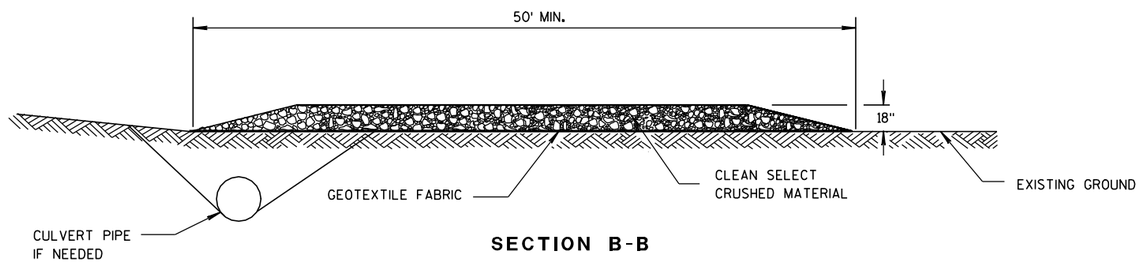

SECTION B-B

TRACKING PAD

6

6

S.D.D. 8 E 14-1

S.D.D. 8 E 14-1

TRACKING PAD

STATE OF WISCONSIN
DEPARTMENT OF TRANSPORTATION

APPROVED

3/24/2011	/S/ Jerry H. Zona	
DATE	ROADWAY STANDARDS ENGINEER	ENT

FHWA

METAL APRON ENDWALLS

PIPE DIA. (IN.)	MIN. THICK. (Inches) STEEL	MIN. THICK. (Inches) ALUM.	DIMENSIONS (Inches) A (±1")	B (MAX.)	H (±1")	L (±1 1/2")	L1 ①	L2 ①	W (±2")	APPROX. SLOPE	BODY
12	.064	.060	6	6	6	21	12	17 1/2	24	2 1/2 to 1	1 Pc.
15	.064	.060	7	8	6	26	14	21 3/4	30	2 1/2 to 1	1 Pc.
18	.064	.060	8	10	6	31	15	28 1/4	36	2 1/2 to 1	1 Pc.
21	.064	.060	9	12	6	36	18	29 5/8	42	2 1/2 to 1	1 Pc.
24	.064	.075	10	13	6	41	18	37 1/4	48	2 1/2 to 1	1 Pc.
30	.079	.075	12	16	8	51	18	52 1/4	60	2 1/2 to 1	1 Pc.
36	.079	.105	14	19	9	60	24	59 3/4	72	2 1/2 to 1	2 Pc.
42	.109	.105	16	22	11	69	24	75 5/8	84	2 1/2 to 1	2 Pc.
48	.109	.105	18	27	12	78	24	81	90	2 1/4 to 1	3 Pc.
54	.109	.105	18	30	12	84	30	85 1/2	102	2 1/4 to 1	3 Pc.
60	.109×	.105×	18	33	12	87	—	—	114	2 to 1	3 Pc.
66	.109×	.105×	18	36	12	87	—	—	120	2 to 1	3 Pc.
72	.109×	.105×	18	39	12	87	—	—	126	2 to 1	3 Pc.
78	.109×	.105×	18	42	12	87	—	—	132	1 1/2 to 1	3 Pc.
84	.109×	.105×	18	45	12	87	—	—	138	1 1/2 to 1	3 Pc.
90	.109×	.105×	18	37	12	87	—	—	144	1 1/2 to 1	3 Pc.
96	.109×	.105×	18	35	12	87	—	—	150	1 1/2 to 1	3 Pc.

× EXCEPT CENTER PANEL
SEE GENERAL NOTES

REINFORCED CONCRETE APRON ENDWALLS

PIPE DIA. (IN.)	DIMENSIONS (Inches) T	A	B	C	D	E	G	APPROX. SLOPE
12	2	4	24	48 7/8	72 7/8	24	2	3 to 1
15	2 1/4	6	27	46	73	30	2 1/4	3 to 1
18	2 1/2	9	27	46	73	36	2 1/2	3 to 1
21	2 3/4	9	36	37 1/2	73 1/2	42	2 3/4	3 to 1
24	3	9 1/2	43 1/2	30	73 1/2	48	3	3 to 1
27	3 1/4	10 1/2	49 1/2	24	73 1/2	54	3 1/4	3 to 1
30	3 1/2	12	54	19 3/4	73 1/2	60	3 1/2	3 to 1
36	4	15	63	34 3/4	97 3/4	72	4	3 to 1
42	4 1/2	21	63	35	98	78	4 1/2	3 to 1
48	5	24	72	26	98	84	5	3 to 1
54	5 1/2	27	65	*33 1/4-**35	*98 1/4-**100	90	5 1/2	2 2/5 to 1
60	6	*30-**35	60	39	99	96	5	2 to 1
66	6 1/2	*24-**30	*72-**78	*21-**27	99	102	5 1/2	2 to 1
72	7	*24-**36	78	21	99	108	6	2 to 1
78	7 1/2	*24-**36	78	21	99	114	6 1/2	2 to 1
84	8	36	90 1/2	21	111 1/2	120	6 1/2	1 1/2 to 1
90	8 1/2	41	87 1/2	24	111 1/2	132	6 1/2	1 1/2 to 1

*MINIMUM
**MAXIMUM

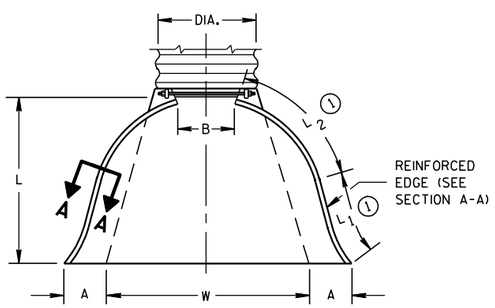

PLAN VIEW

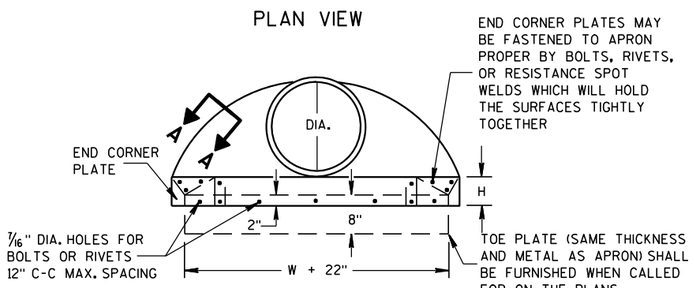

END VIEW

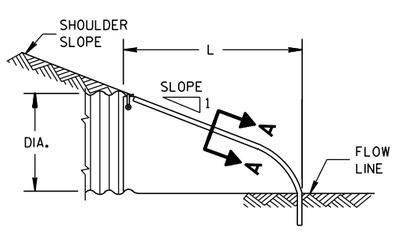

SIDE ELEVATION

METAL ENDWALLS

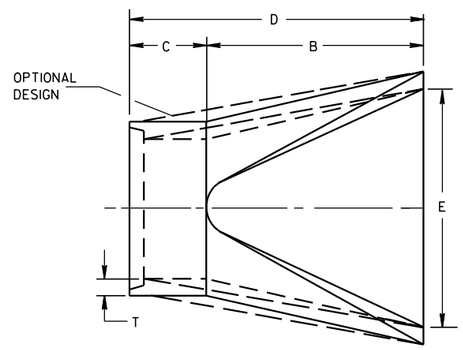

PLAN

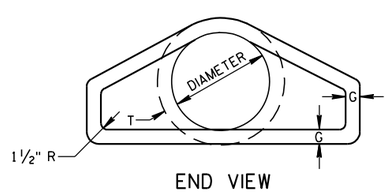

END VIEW

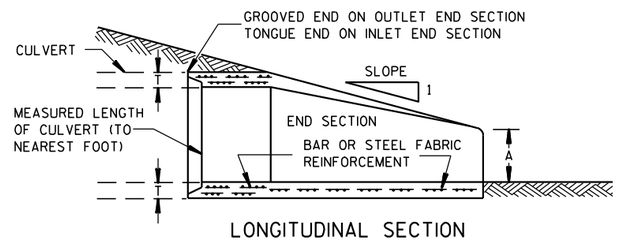

LONGITUDINAL SECTION

CONCRETE ENDWALLS

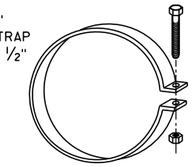

ALTERNATE FOR TYPE 1 CONNECTION

END SECTION CONNECTOR STRAP

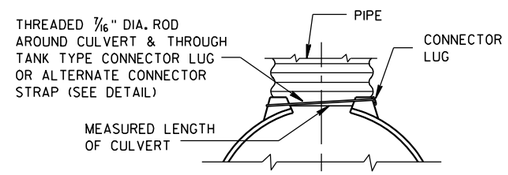

TYPE 1
FOR 12" THRU 24" CORR. PIPE

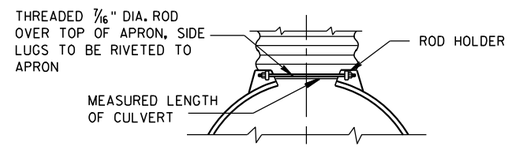

TYPE 2
FOR 30" THRU 96" CORR. PIPE

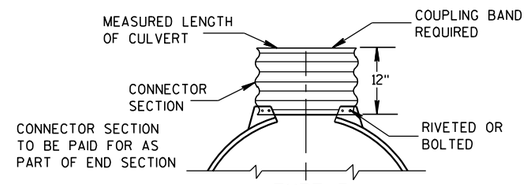

TYPE 3
FOR 42" THRU 96" CORR. PIPE

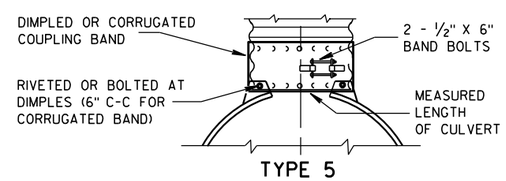

TYPE 5
ALTERNATE FOR:
ALL SIZES CORRUGATED CIRCULAR PIPE

NOTE: DIMPLED BAND FITS OVER OUTSIDE OF ENDWALL, AND CORRUGATED BAND FITS INSIDE ENDWALL. DIMPLED BAND MAY BE USED WITH HELICALLY CORRUGATED PIPE.

FOR CIRCUMFERENTIALLY CORRUGATED PIPE USE ENDWALL CONNECTION DETAILS 1, 2, 3 OR 5 AS APPLICABLE.

FOR HELICALLY CORRUGATED PIPE USE ENDWALL CONNECTION DETAILS 1, 2 OR 5.

FOR HELICALLY CORRUGATED PIPES WITH TWO CIRCUMFERENTIAL CORRUGATIONS AT EACH END USE ENDWALL CONNECTION DETAILS 1, 2 OR 3.

CONNECTION DETAILS

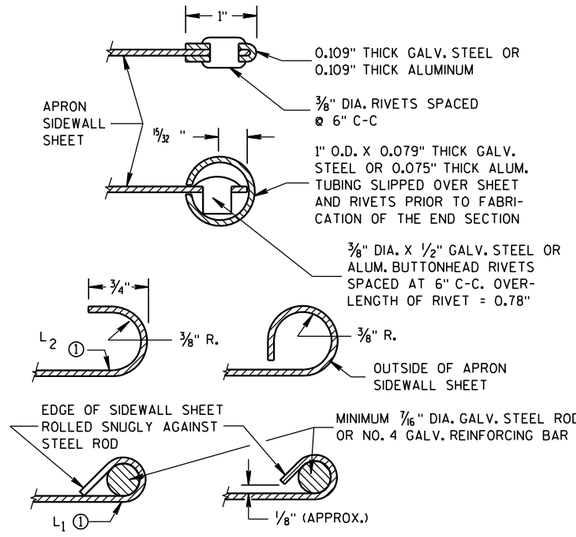

SECTION A-A

GENERAL NOTES

DETAILS OF CONSTRUCTION, MATERIALS AND WORKMANSHIP NOT SHOWN ON THIS DRAWING SHALL CONFORM TO THE PERTINENT REQUIREMENTS OF THE STANDARD SPECIFICATIONS AND THE APPLICABLE SPECIAL PROVISIONS.

CONCRETE CULVERT ENDWALLS MAY NOT BE USED WITH GALVANIZED STEEL OR ALUMINUM CULVERT PIPE OR VISE VERSA. GALVANIZED STEEL OR ALUMINUM ENDWALLS SHALL NORMALLY BE INSTALLED ON CULVERT PIPE OF THE SAME METAL.

ALL THREE PIECE STEEL APRON ENDWALLS FOR 60" DIAMETER PIPE AND LARGER SHALL HAVE 0.109" SIDES AND 0.138" CENTER PANELS. ALL THREE PIECE ALUMINUM APRON ENDWALLS FOR 60" DIAMETER PIPE AND LARGER SHALL HAVE 0.105" SIDES AND 0.134" CENTER PANELS. THE WIDTH OF CENTER PANELS SHALL BE GREATER THAN 20 PERCENT OF THE PIPE PERIMETER.

LAP SEAMS SHALL BE TIGHTLY JOINED BY GALVANIZED RIVETS OR BOLTS FOR STEEL UNITS AND ALUMINUM RIVETS AND BOLTS FOR ALUMINUM UNITS. FOR THE 60" THROUGH 96" DIAMETER APRON ENDWALL SIZES, THE REINFORCED EDGES AND CENTER PANEL SEAMS SHALL BE FURTHER REINFORCED WITH GALVANIZED STEEL OR ALUMINUM STIFFENER ANGLES. THE ANGLES SHALL BE ATTACHED BY GALVANIZED NUTS AND BOLTS FOR STEEL UNITS AND ALUMINUM NUTS AND BOLTS FOR ALUMINUM UNITS.

WHERE TWO OR MORE PIPES WITH APRON ENDWALLS ARE LAID ADJACENT TO EACH OTHER, THEY SHALL BE SEPARATED BY A DISTANCE SUFFICIENT TO PROVIDE A MINIMUM CLEARANCE OF 6 INCHES BETWEEN APRON ENDWALLS.

① FOR PIPE SIZES UP TO 60" DIAMETER, A 180° ROLLED EDGE MAY BE USED INSTEAD OF STEEL ROD REINFORCEMENT. SEE SECTION A-A.

APRON ENDWALLS FOR CULVERT PIPE

STATE OF WISCONSIN
DEPARTMENT OF TRANSPORTATION

APPROVED
11/30/94 — DATE
/S/ Rory L. Rhinesmith — CHIEF ROADWAY DEVELOPMENT ENGINEER
FHWA

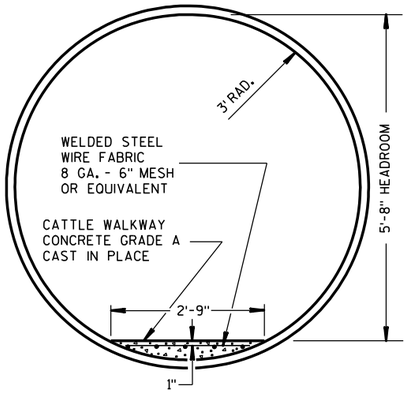

CROSS SECTION

CORRUGATED METAL PIPE CATTLE PASS

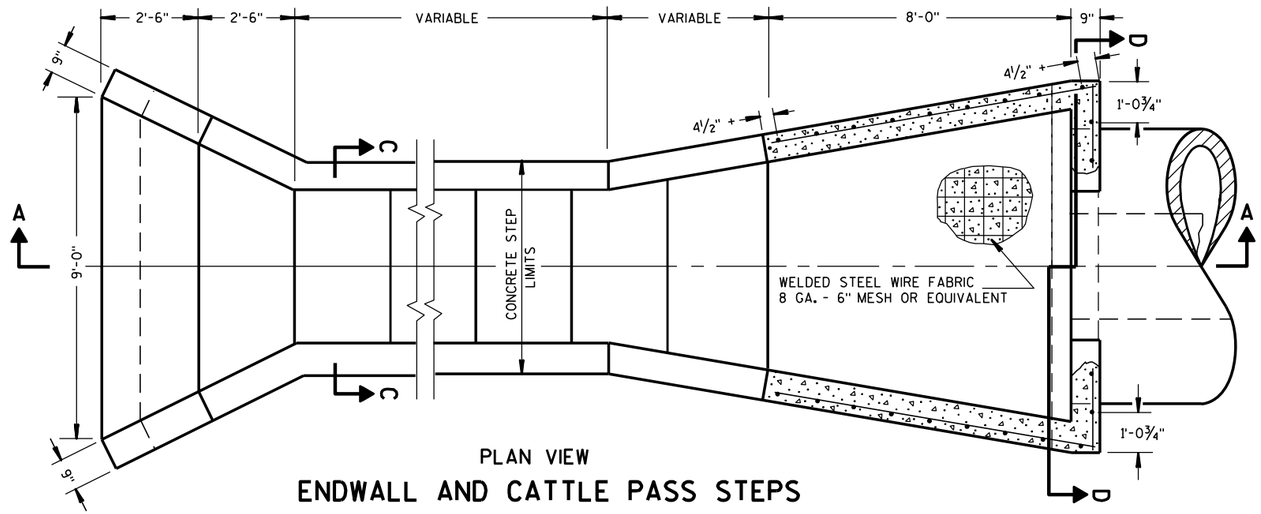

PLAN VIEW

ENDWALL AND CATTLE PASS STEPS

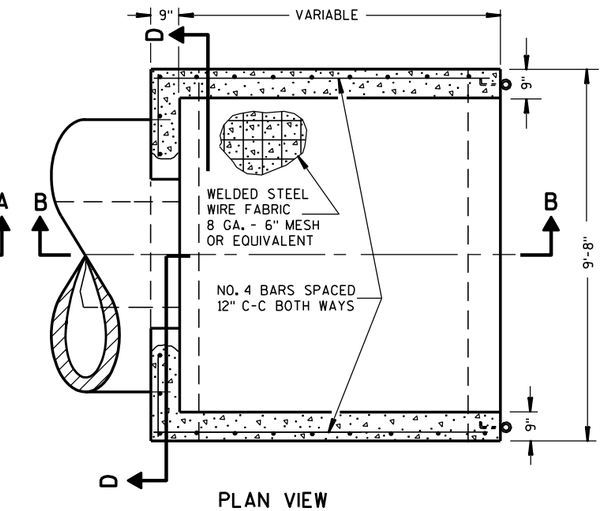

PLAN VIEW

ENDWALL FOR CATTLE PASS

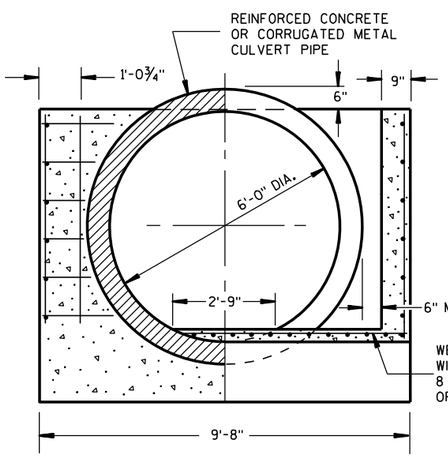

SECTION D-D

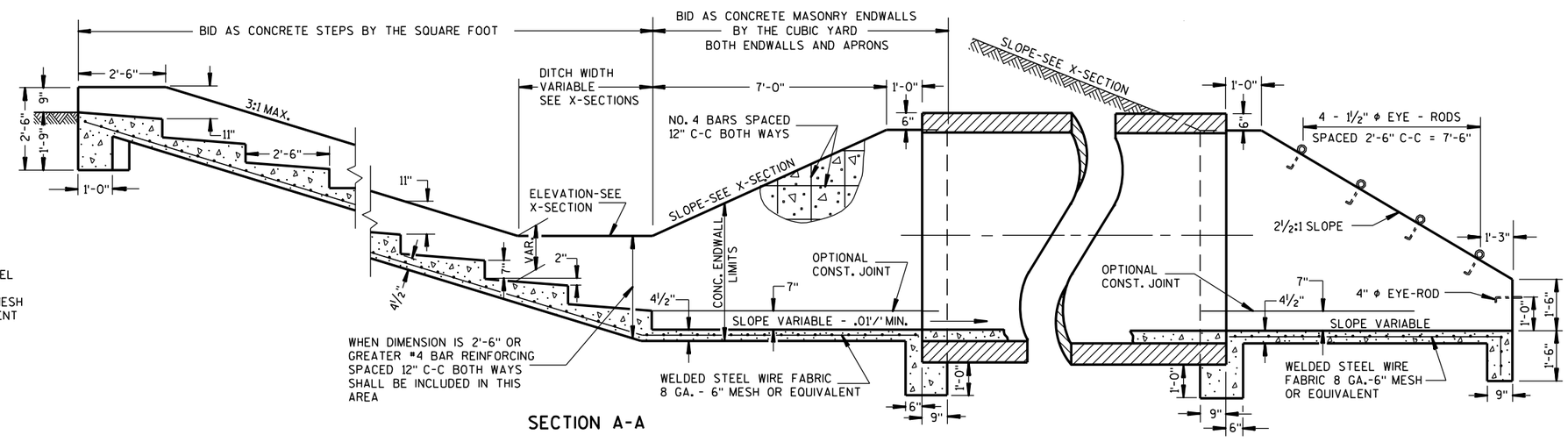

SECTION A-A

SECTION B-B

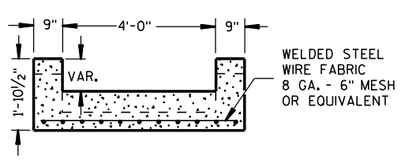

SECTION C-C

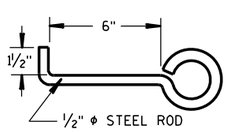

EYE-ROD ANCHOR

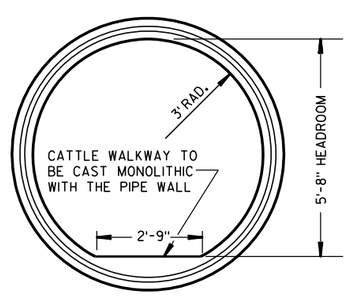

END VIEW

REINFORCED CONCRETE PIPE CATTLE PASS

GENERAL NOTES

DETAILS OF CONSTRUCTION, MATERIALS AND WORKMANSHIP NOT SHOWN ON THIIS DRAWING SHALL CONFORM TO THE PERTINENT REQUIREMENTS OF THE STANDARD SPECIFICATIONS AND THE APPLICABLE SPECIAL PROVISIONS.

ALL STEEL REINFORCEMENT IN ENDWALLS AND CATTLE PASS STEPS SHALL BE EMBEDDED 2 INCHES CLEAR UNLESS OTHERWISE NOTED.

ALL STEEL REINFORCEMENT OR FABRIC USED AS SHOWN ABOVE SHALL BE INCIDENTAL TO THE BID ITEM OF WHICH IT IS AN INTEGRAL PART.

EYE-RODS FOR FENCE CONNECTIONS SHALL BE PROVIDED BY THE CONTRACTOR AS AN INCIDENTAL TO THE BID ITEM OF CONCRETE MASONRY, ENDWALLS AND SHALL BE GALVANIZED.

CONCRETE USED FOR THE CATTLE WALKWAY WITHIN THE PIPE SHALL BE INCIDENTAL TO THE BID ITEM OF PIPE CATTLE PASS.

DETAILS FOR PIPE CATTLE PASS, CONCRETE ENDWALL AND STEPS

STATE OF WISCONSIN
DEPARTMENT OF TRANSPORTATION

APPROVED

6/6/75	/S/ Harold Fi[illegible]	
DATE	STATE DESIGN ENGINE[illegible]	HWYS

FHWA

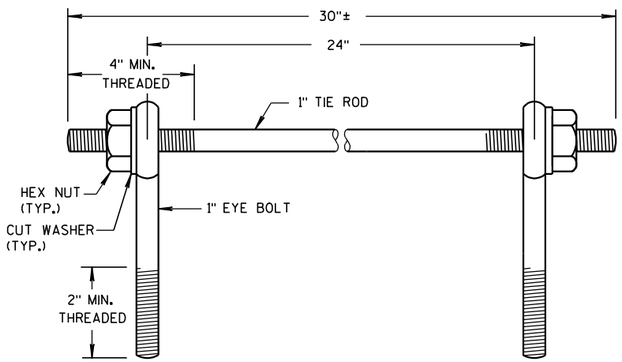

EYE BOLTS AND TIE ROD

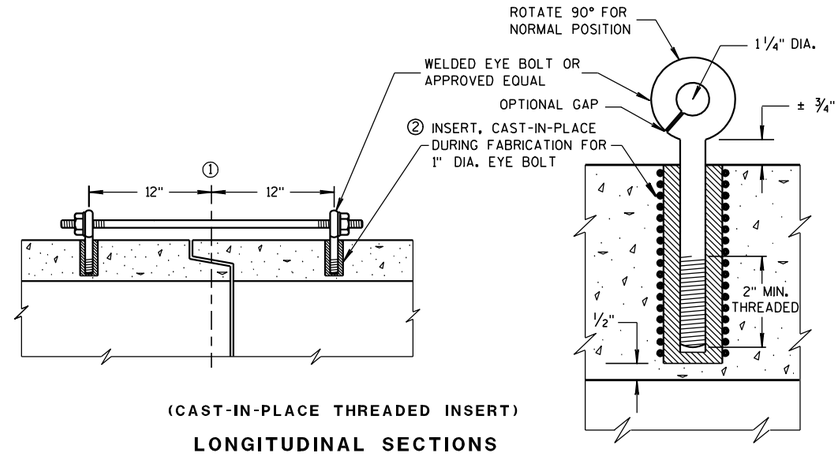

(CAST-IN-PLACE THREADED INSERT)

LONGITUDINAL SECTIONS

EYE BOLT AND TIE ROD ASSEMBLY (ALTERNATE NO. 1)

GENERAL NOTES

DETAILS OF CONSTRUCTION, MATERIALS, AND WORKMANSHIP NOT SHOWN ON THIS DRAWING SHALL CONFORM TO THE PERTINENT REQUIREMENTS OF THE STANDARD SPECIFICATIONS AND APPLICABLE SPECIAL PROVISIONS.

CONCRETE CULVERT AND STORM SEWER PIPE SHALL BE TIED TOGETHER IN THE MANNER ILLUSTRATED BY THIS DETAIL AT LOCATIONS DESIGNATED IN THE STANDARD SPECIFICATIONS AND THE PLAN. THE CONTRACTOR MAY USE EITHER ALTERNATE 1, 2 OR 3 FOR DRAINAGE STRUCTURES. ONLY ALTERNATE 1 AND 3 MAY BE USED FOR CATTLE PASSES, UNLESS OTHERWISE STATED IN THE CONTRACT. THE MATERIALS, FABRICATION AND WORK NECESSARY TO TIE THE PIPE BY THIS DETAIL WILL BE CONSIDERED INCIDENTAL TO THE PIPE AND APRON ENDWALLS IF REQUIRED.

DETAILED DRAWINGS FOR PROPOSED ALTERNATE DESIGNS FOR JOINT TIES SHALL BE SUBMITTED TO THE ENGINEER FOR APPROVAL.

JOINT TIES TO BE HOT-DIP GALVANIZED PER ASTM A 153.

① ℄ OF TONGUE AND GROOVE OR BELL AND SPIGOT JOINTS.

② THE INSIDE OF THE THREADED INSERTS SHALL BE CLEAN TO ALLOW THE INSERTION OF THREADED EYE BOLTS.

③ HOLES SHALL BE CAST-IN-PLACE OR DRILLED 12 INCHES FROM ℄ OF TONGUE AND GROOVE.

④ BOLT PROJECTION INSIDE OF PIPE SHALL NOT EXCEED 2 INCHES.

⑤ OPENING TO BE ROD DIAMETER PLUS 1 INCH.

⑥ LENGTH ADEQUATE TO EXTEND TO WITHIN 1/2 INCH OF THE INNER SURFACE OF THE PIPE.

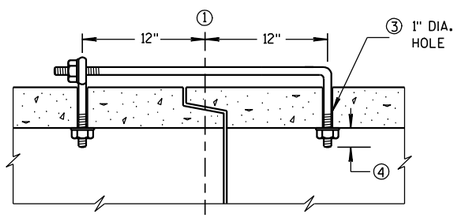

(TONGUE & GROOVE PIPE)

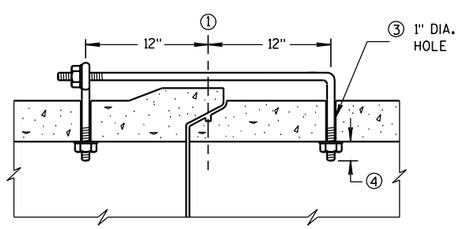

(MODIFIED BELL PIPE)

LONGITUDINAL SECTION

EYE BOLT DIMENSION TABLE

PIPE SIZE	L = LENGTH	
	TONGUE & GROOVE PIPE	MODIFIED BELL PIPE
18" TO 24"	4 1/2"	6 1/4"
30"	5"	7"
36"	5 1/2"	7"
42"	6"	
48"	6 1/2"	
60"	7 1/2"	
66"	8"	

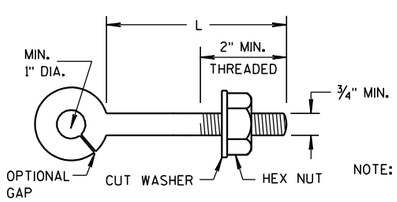

EYE BOLT

NOTE:

NOTE: TWO EYE BOLTS MAY BE USED WITH A 30" LONG THREADED ROD IN LIEU OF THE 90° BENT TIE ROD.

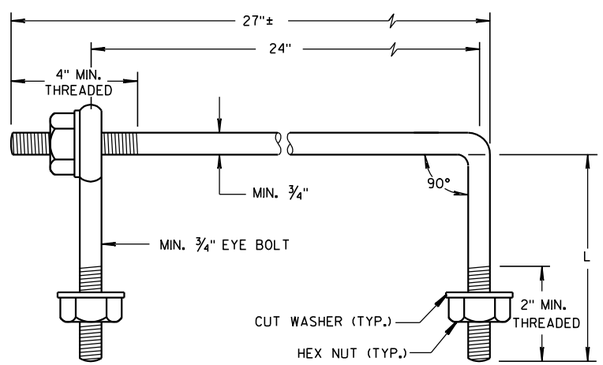

EYE BOLT AND TIE ROD

(JOINT TIES FOR 18" TO 66" DIA. CONCRETE PIPE)

EYE BOLT AND TIE ROD ASSEMBLY (ALTERNATE NO. 2)

ADJUSTABLE TIE ROD TABLE

PIPE DIAMETER	TIE ROD DIAMETER	D	L_1	N
12-60	5/8	5/8	5	1/2
66-84	3/4	3/4	5	1/2
90-108	1	1	7	1 7/16

DIMENSIONS SHOWN ARE IN INCHES

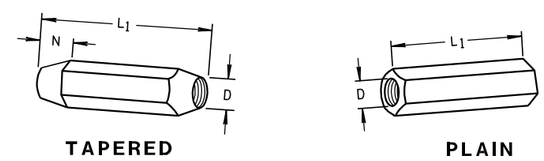

TAPERED PLAIN

RIGHT AND LEFT THREADS

SLEEVE NUTS

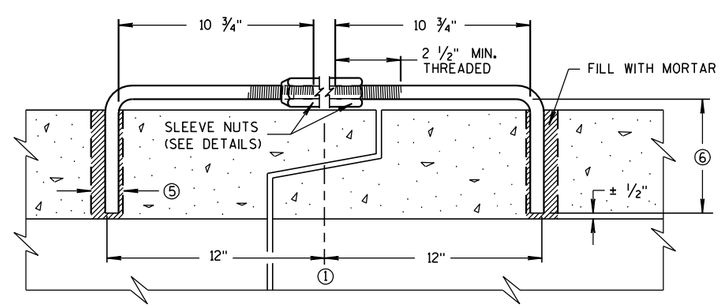

LONGITUDINAL SECTION

(JOINT TIES FOR 12" TO 108" DIA. CONCRETE PIPE)

ADJUSTABLE TIE ROD (ALTERNATE NO. 3)

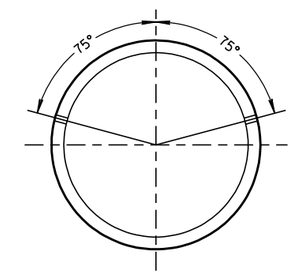

PLACEMENT OF (2) CAST-IN-PLACE INSERTS OR HOLES DURING FABRICATION FOR PIPE SECTIONS REQUIRING TIE RODS

TRANSVERSE SECTION

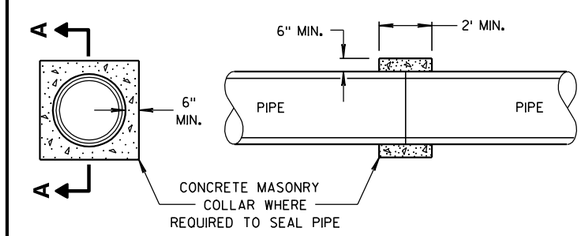

SECTION A-A

CONCRETE COLLAR DETAIL

JOINT TIES FOR CONCRETE PIPE AND CONCRETE COLLAR DETAIL

STATE OF WISCONSIN
DEPARTMENT OF TRANSPORTATION

APPROVED
6/5/2012 /S/ Jerry H. Zogg
DATE ROADWAY STANDARDS DEVELOPMENT ENGINEER
FHWA

6

6

S.D.D. 8 F 4-7

S.D.D. 8 F 4-7

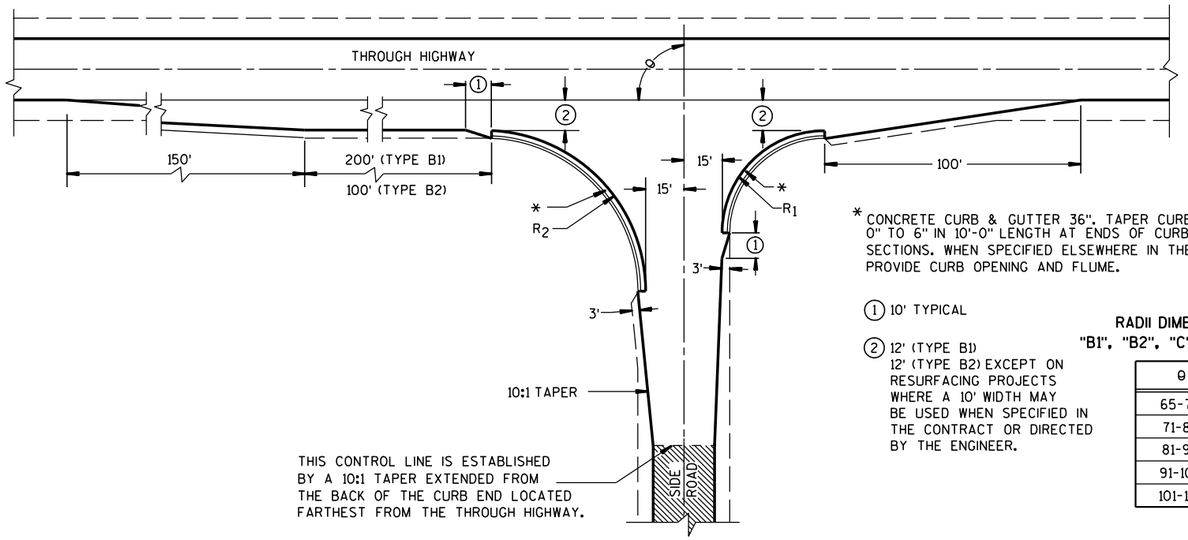

TYPE "B1" AND "B2"

* CONCRETE CURB & GUTTER 36". TAPER CURB HEIGHT 0" TO 6" IN 10'-0" LENGTH AT ENDS OF CURB & GUTTER SECTIONS. WHEN SPECIFIED ELSEWHERE IN THE CONTRACT, PROVIDE CURB OPENING AND FLUME.

(1) 10' TYPICAL

(2) 12' (TYPE B1)
12' (TYPE B2) EXCEPT ON RESURFACING PROJECTS WHERE A 10' WIDTH MAY BE USED WHEN SPECIFIED IN THE CONTRACT OR DIRECTED BY THE ENGINEER.

RADII DIMENSIONS FOR TYPES "B1", "B2", "C" AND "D" INTERSECTIONS

θ	R_1	R_2
65-70	35	70
71-80	40	70
81-90	40	60
91-100	50	55
101-110	60	45

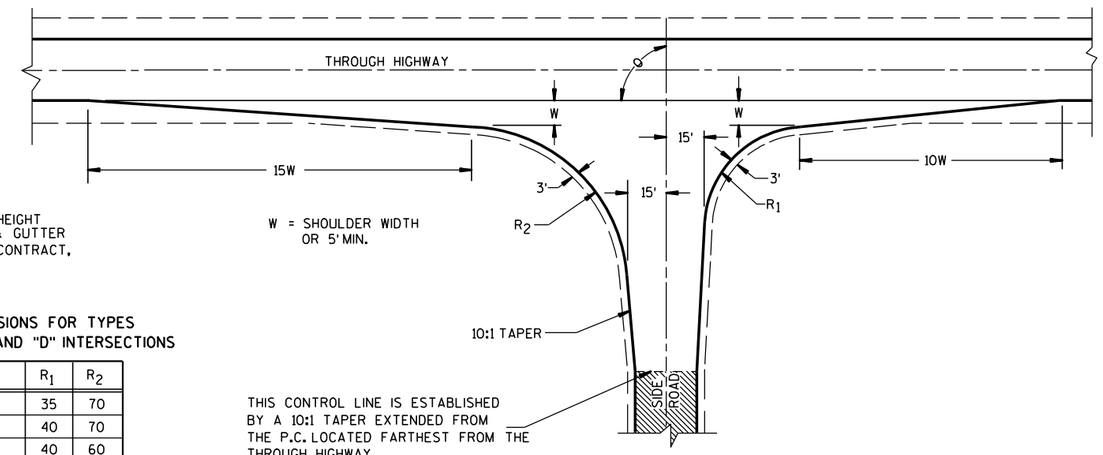

TYPE "C"

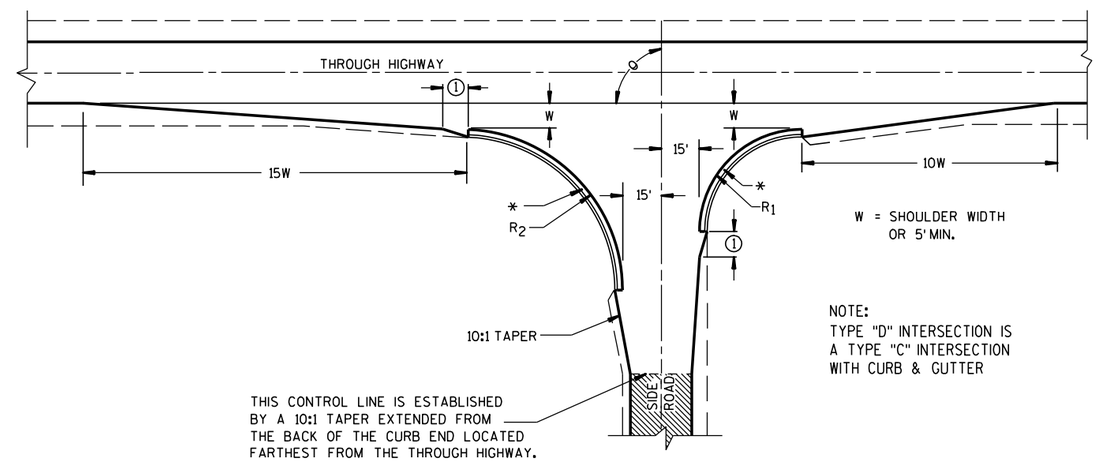

TYPE "D"

NOTE:
TYPE "D" INTERSECTION IS A TYPE "C" INTERSECTION WITH CURB & GUTTER

GENERAL NOTES

DESIGNS MAY BE USED INTERCHANGEABLY IN COMBINATION OR SEPARATELY FOR ANY ONE COMPLETE INTERSECTION DEPENDING UPON INTERSECTION ANGLE AND SURFACING OF EACH APPROACH ROADWAY.

SIDE ROAD SURFACING NOTE

WHEN THE SIDE ROAD IS NOT PRESENTLY PAVED, PAVEMENT SHALL BE PLACED TO THE LIMITS SHOWN UNLESS OTHERWISE PROVIDED IN THE CONTRACT. WHERE THE CONSTRUCTION LIMITS ARE BEYOND THE PAVING LIMITS, CRUSHED AGGREGATE SURFACING SHALL BE PLACED BETWEEN THE PAVING LIMITS AND CONSTRUCTION LIMITS.

WHEN THE SIDE ROAD IS PRESENTLY PAVED, NEW PAVEMENT SHALL BE PLACED TO THE LIMITS OF DESIGN AS SHOWN AND BEYOND, IF NECESSARY, TO MEET EXISTING PAVEMENT.

WHEN THE SIDE ROAD IS THE CONSTRUCTION PROJECT, THE INTERSECTION SURFACING SHALL BE THE SAME AS FOR THE PROJECT.

EXISTING SURFACE

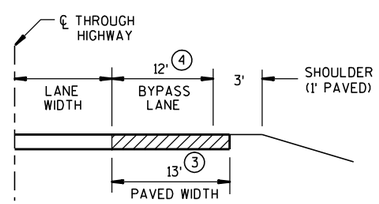

SECTION A-A
(SHOWING BYPASS LANE AND SHOULDER)

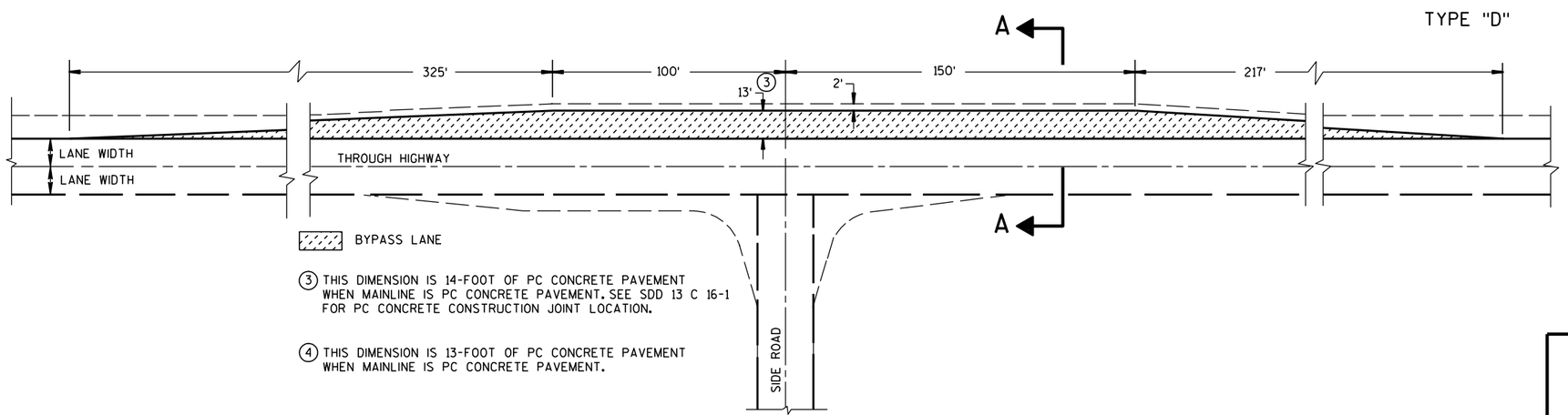

BYPASS LANE

(3) THIS DIMENSION IS 14-FOOT OF PC CONCRETE PAVEMENT WHEN MAINLINE IS PC CONCRETE PAVEMENT. SEE SDD 13 C 16-1 FOR PC CONCRETE CONSTRUCTION JOINT LOCATION.

(4) THIS DIMENSION IS 13-FOOT OF PC CONCRETE PAVEMENT WHEN MAINLINE IS PC CONCRETE PAVEMENT.

TEE INTERSECTION BYPASS LANE DETAIL

AT-GRADE SIDE ROAD INTERSECTION, TYPES "B1", "B2", "C" AND "D" AND TEE INTERSECTION BYPASS LANE

STATE OF WISCONSIN
DEPARTMENT OF TRANSPORTATION

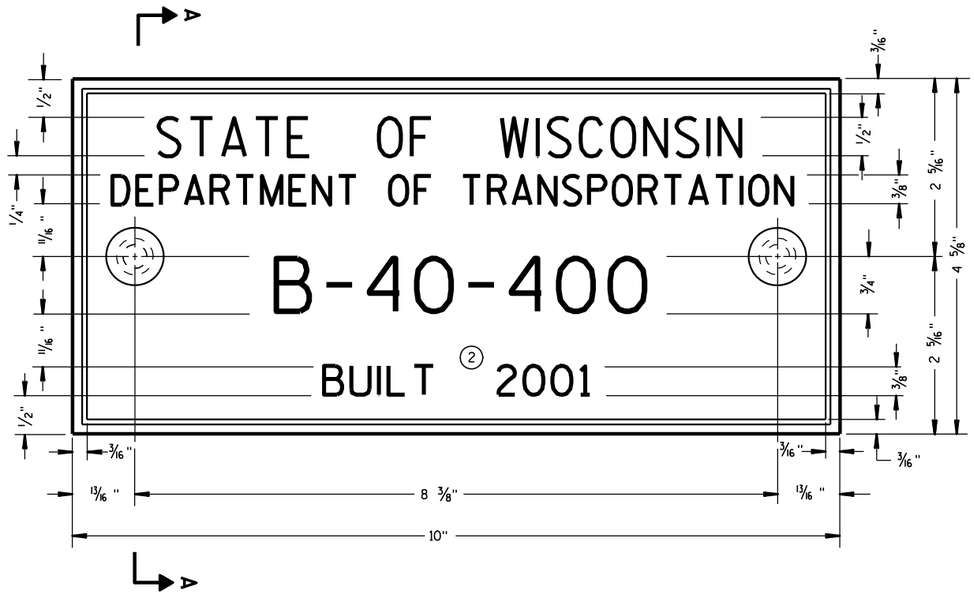

TYPICAL NAME PLATE

(BRIDGES, CULVERTS, AND RETAINING WALLS)

GENERAL NOTES

NAME PLATES TO BE INSTALLED ON BRIDGES, CULVERTS, AND RETAINING WALLS SHALL CONFORM TO THE REQUIREMENTS OF SECTION 502.3.11 OF THE STANDARD SPECIFICATIONS.

THE BRIDGE NUMBER AND YEAR BUILT SHOWN ON THIS DRAWING ARE EXAMPLES ONLY. SEE CONSTRUCTION PLANS FOR INDIVIDUAL NUMBERING AND YEAR BUILT.

① EPOXY RESIN SHALL BE FROM AN APPROVED MANUFACTURER AND USED IN ACCORDANCE WITH MANUFACTURER'S RECOMMENDATIONS.

② REHABILITATION OF AN EXISTING STRUCTURE SHOULD USE THE DATE OF ORIGINAL STRUCTURE CONSTRUCTION.

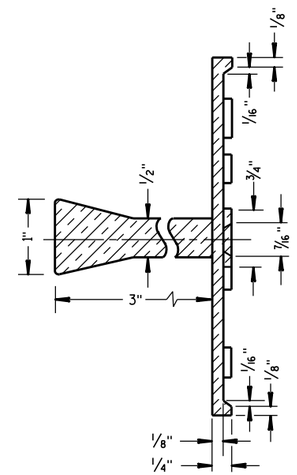

SECTION A-A

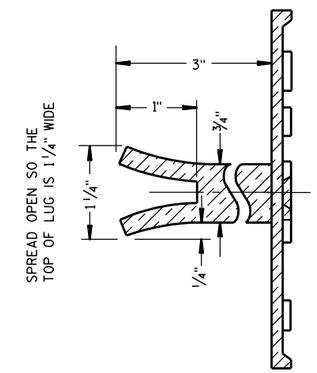

ALTERNATE LUG

FOR MULTI-UNIT STRUCTURES
LINE 3 ABOVE SHALL READ

B = BRIDGE
C = CULVERT
R = RETAINING WALL

COUNTY NO.

BRIDGE NO.

UNIT NO. FOR MULTIPLE
UNIT BRIDGE

B-40-400-1A

NUMBERING DESIGNATION
MULTI-UNIT STRUCTURES

① ADHERE ANCHOR LUG TO PRECAST RETAINING WALL WITH EPOXY RESIN.

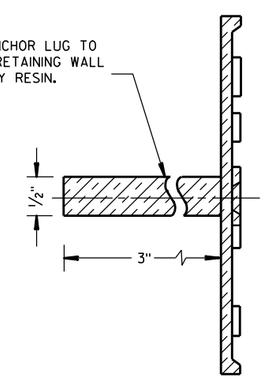

ALTERNATE LUG

(FOR ATTACHMENT TO PRECAST STRUCTURES)

NAME PLATE (STRUCTURES)		
STATE OF WISCONSIN DEPARTMENT OF TRANSPORTATION		
APPROVED		
3/26/10 DATE	/S/ Scot Beck-- CHIEF STRUCTURAL DEVELOP	ENGINEER
FHWA		

6

6

S.D.D. 12 A 3-10

S.D.D. 12 A 3-10

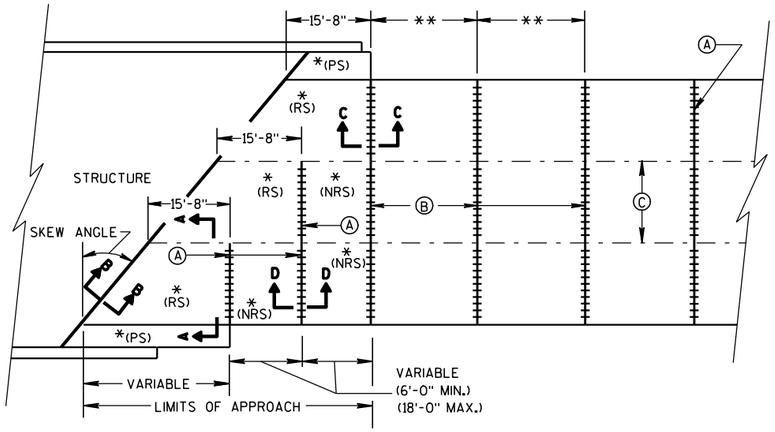

SKEWED APPROACH
(PAVEMENT MORE THAN 2 LANES)

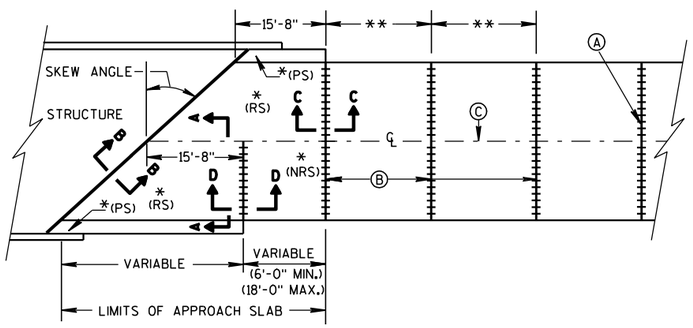

SKEWS >30°
(PAVEMENT WIDTH ≤30')

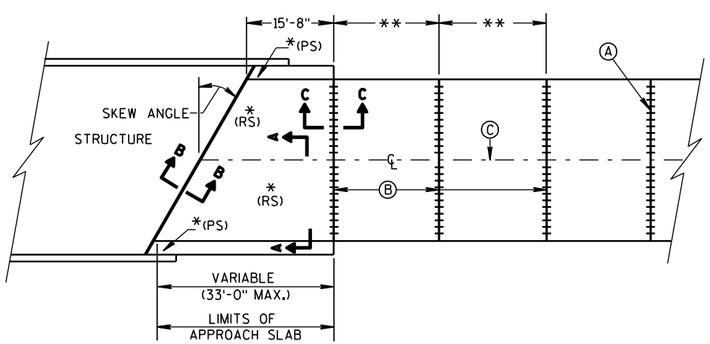

SKEWS ≤30°
(PAVEMENT WIDTH ≤30')

APPROACH SLAB AND ADJACENT PAVEMENT

*(RS) = REINFORCED CONCRETE SLAB
*(PS) = PAVED CONCRETE SHOULDER: CONCRETE PAVEMENT, OR CONCRETE SURFACE DRAIN (SEE DETAILS ELSEWHERE IN THE PLAN)
*(NRS) = NON-REINFORCED CONCRETE SLAB

**STANDARD TRANSVERSE JOINT SPACING (SEE SDD 13C4, SDD 13C11, & SDD 13C13)

Ⓐ STANDARD CONTRACTION JOINT NORMAL TO ℄ OR ℄
Ⓑ 1½" EXPANSION JOINT WITH DOWEL BARS NORMAL TO ℄ OR ℄
Ⓒ STANDARD LONGITUDINAL JOINT AND TIE BARS.

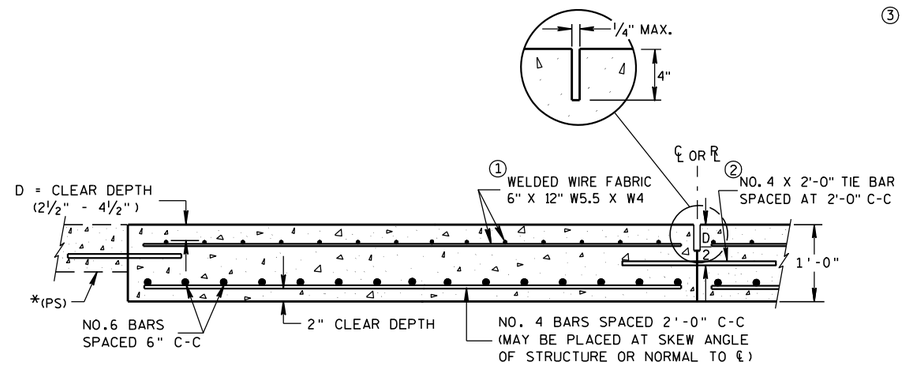

SECTION A-A
REINFORCEMENT POSITIONING DETAIL

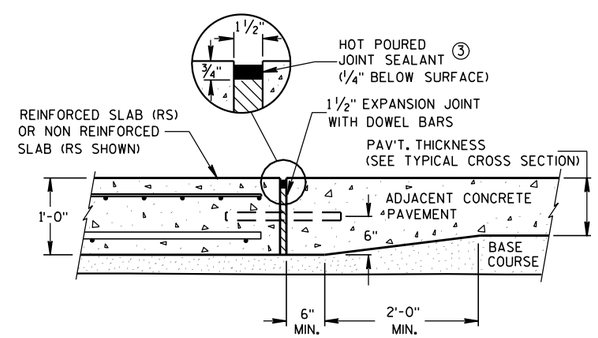

SECTION C-C
TRANSITION DETAIL
APPROACH SLAB TO ADJACENT PAVEMENT

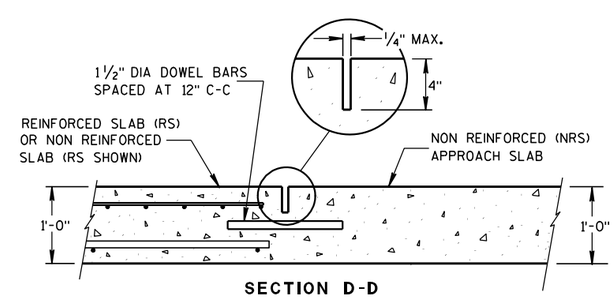

SECTION D-D
CONTRACTION JOINT

GENERAL NOTES

APPROACH SLABS ABUTTING AN HMA PAVEMENT OVER BASE COURSE DO NOT NEED TO BE DOWELED.

THE CONTRACTOR MAY SPLICE NO. 6 BARS IN THE APPROACH SLAB FOR SKEWED STRUCTURES ONLY. STAGGER SPLICES WITH A MAXIMUM OF ONE SPLICE PER BAR. THE LENGTH OF LAP IS 20 INCHES.

① THE CONTRACTOR MAY USE NO. 4 BARS SPACED AT 2'-0" C-C IN BOTH THE LONGITUDINAL AND TRANSVERSE DIRECTIONS FOR TOP REINFORCEMENT AS AN ALTERNATIVE TO THE WELDED WIRE FABRIC.

② THE CONTRACTOR MAY OMIT TIE BARS BETWEEN REINFORCED SLABS WHERE SLAB REINFORCEMENT BARS EXTEND ACROSS THE CENTERLINE OR REFERENCE LINE.

③ USE A JOINT SEALANT MEETING THE REQUIREMENTS OF ASTM D6690.

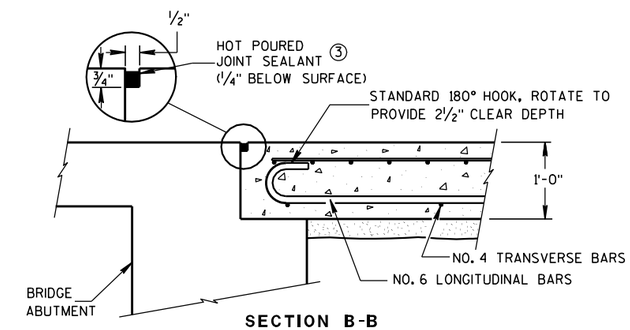

SECTION B-B
BEND DETAIL
BOTTOM REINFORCEMENT

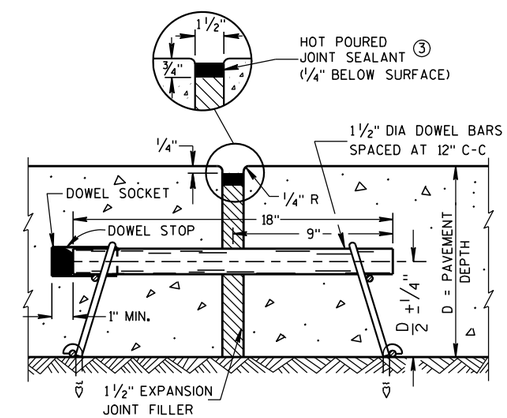

EXPANSION JOINT

6

6

S.D.D. 13 B 2-6

S.D.D. 13 B 2-6

CONCRETE PAVEMENT APPROACH SLAB

STATE OF WISCONSIN
DEPARTMENT OF TRANSPORTATION

APPROVED
12/11/2009 — DATE
/S/ Deb Bischoff — PAVEMENT POLICY & DE ... NEER
FHWA

GENERAL NOTES

DETAILS OF CONSTRUCTION, MATERIALS AND WORKMANSHIP NOT SHOWN ON THIS DRAWING SHALL CONFORM TO THE PERTINENT REQUIREMENTS OF THE STANDARD SPECIFICATIONS, AND THE APPLICABLE SPECIAL PROVISIONS.

(1) W6 X 9 OR W6 X 8.5 STEEL POSTS AND NOTCHED PLASTIC BLOCKOUTS ARE ACCEPTABLE ALTERNATIVES FOR 6" X 8" WOOD POSTS WITH WOOD OR PLASTIC BLOCKOUTS. USE APPROVED NOTCHED PLASTIC BLOCKOUTS WITH STEEL POSTS. APPROVED PLASTIC BLOCKOUT DESIGNS MAY VARY FROM THIS TYPICAL DETAIL WHEN USED IN CONJUNCTION WITH STEEL POSTS.

DO NOT MIX STEEL POSTS AND WOOD POSTS IN A SINGLE INSTALLATION.

(2) USE STRUCTURAL STEEL POSTS CONFORMING TO ASTM A 36. GALVANIZED POSTS ACCORDING TO AASHTO M 111. EITHER SET THE POSTS IN DRILLED HOLES OR DRIVE TO GRADE. REMOVE MUSHROOMING CAUSED BY DRIVING AND REPAIR DAMAGED SPELTER COATING ON GALVANIZED POSTS.

(3) INSTALL STEEL POSTS WITH HOLES ON APPROACHING TRAFFIC SIDE.

(4) USE EITHER WOOD OR APPROVED PLASTIC BLOCKOUTS ON WOOD POSTS.

(5) IF THE DISTANCE FROM BACK OF POST TO SHOULDER HINGE POINT IS LESS THAN 2 FEET INSTALL LONGER POST AT HALF POST SPACING, W BEAM (LHW).

(6) IF ROCK IS ENCOUNTERED DURING EXCAVATION, THE ENGINEER MAY APPROVE USING A 12 INCH DIAMETER POST HOLE EXTENDING 20 INCHES DEEP INTO THE ROCK. PLACE GRANULAR MATERIAL IN THE BOTTOM OF THE HOLE APPROXIMATELY 2½ INCHES DEEP. CUT THE POSTS TO LENGTH AND PLACE IN YHE HOLE. BACKFILL WITH MATERIAL EXCAVATED FROM THE HOLE AND COMPACT ADEQUATEY.

INSTALL BEAM GUARD SECTIONS AND ALL NECESSARY HARDWARE ACCORDING TO THE APPLICABLE PLAN AND CURRENT STANDARD AND SUPPLEMENTAL SPECIFICATIONS.

ALL DIMENSIONS ARE SUBJECT TO MANUFACTURER'S TOLERANCES EXCEPT WHERE ALLOWABLE TOLERANCES ARE SHOWN.

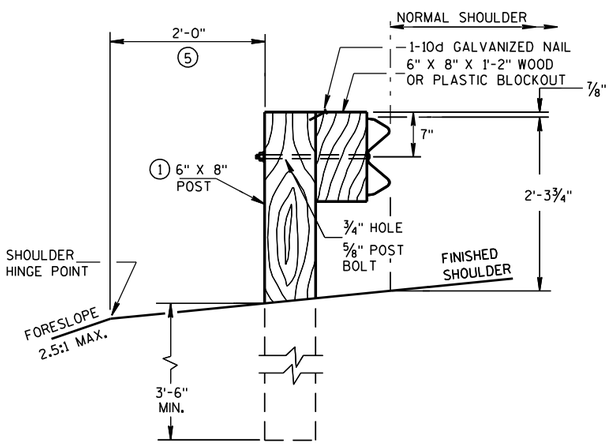

END VIEW
LOCATED ALONG A ROADWAY SHOULDER
STANDARD INSTALLATION

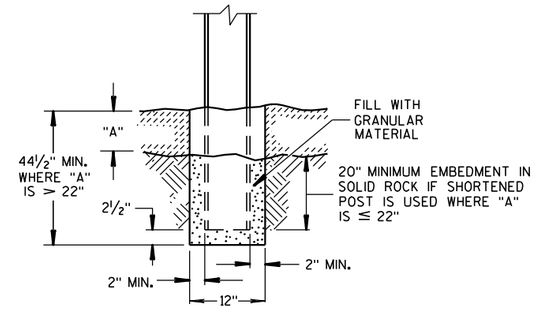

END VIEW
SETTING STEEL OR WOOD POST IN ROCK (6)

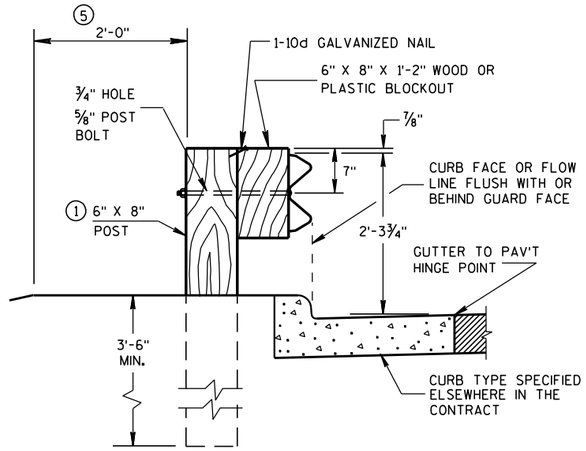

END VIEW
LOCATED ALONG A CURBED ROADWAY

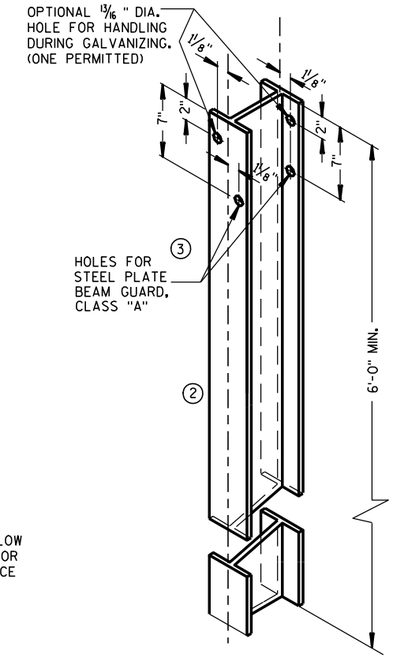

STEEL POST &
HOLE PUNCHING DETAIL
(W6 X 9) (1)

ALL HOLES 13/16" DIAMETER EXCEPT AS NOTED

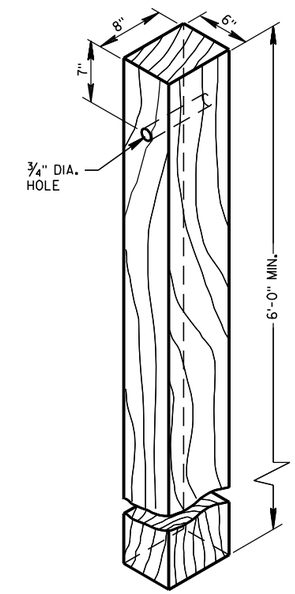

WOOD POST
(6"X8") NOMINAL

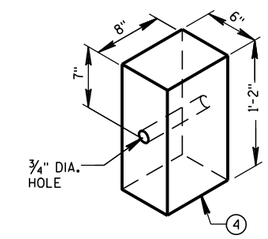

WOOD OR PLASTIC
BLOCKOUT FOR
WOOD POSTS

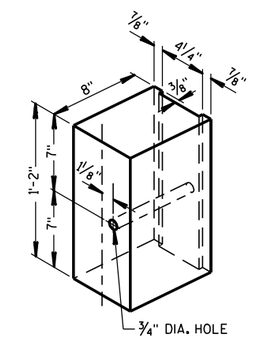

TYPICAL NOTCHED
PLASTIC BLOCKOUT (1)
FOR STEEL POSTS

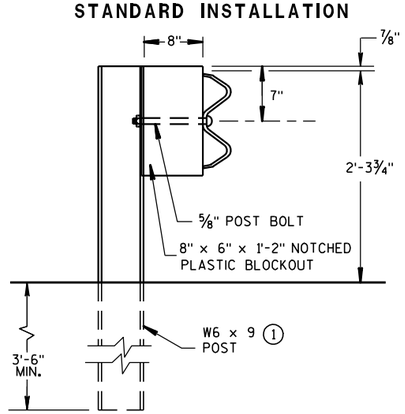

END VIEW
STEEL POST & NOTCHED
PLASTIC BLOCKOUT ALTERNATIVE
STANDARD INSTALLATION

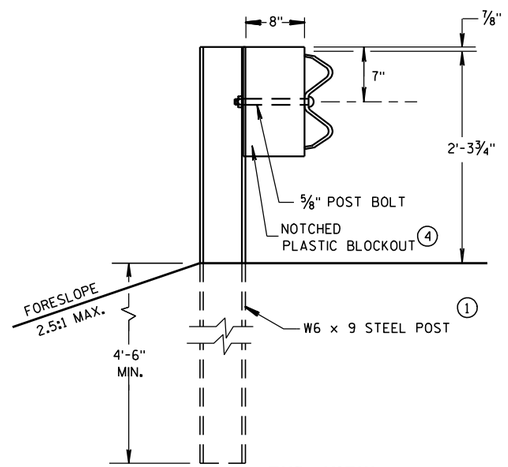

END VIEW
LONGER POST AT HALF
POST SPACING W BEAM
(LHW)

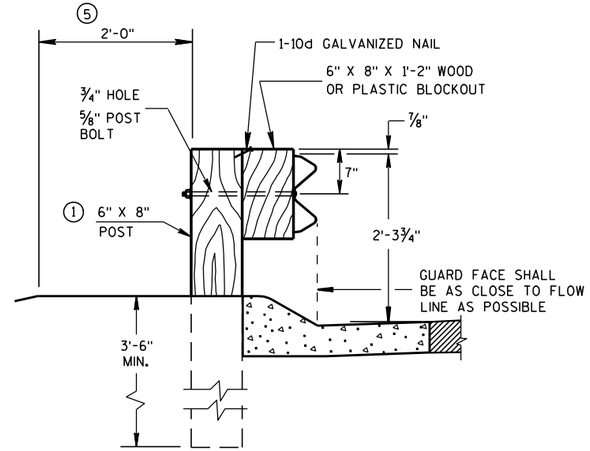

END VIEW
LOCATED ALONG A
MOUNTABLE CURBED ROADWAY

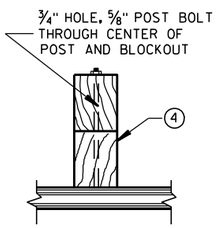

PLAN VIEW
WOOD POST,
BLOCKOUT & BEAM

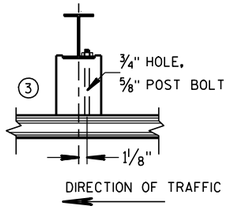

PLAN VIEW
STEEL POST, NOTCHED
PLASTIC BLOCKOUT & BEAM

TYPICAL INSTALLATION OF STEEL PLATE BEAM GUARD

STEEL PLATE BEAM GUARD,
CLASS "A"
INSTALLATION & ELEMENTS

STATE OF WISCONSIN
DEPARTMENT OF TRANSPORTATION

6

6

S.D.D. 14 B 15-7a

S.D.D. 14 B 15-7a

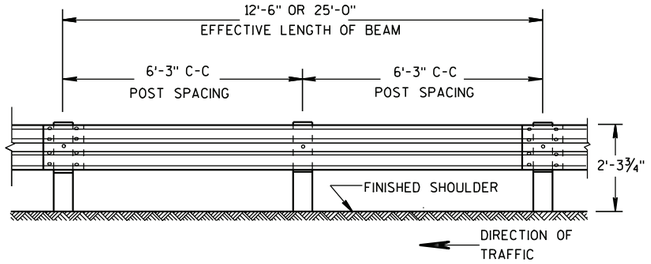

FRONT VIEW

POST SPACING STANDARD INSTALLATION

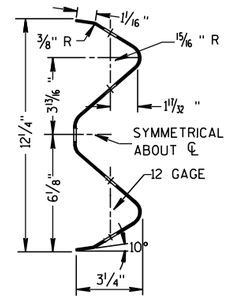

SECTION THRU W BEAM

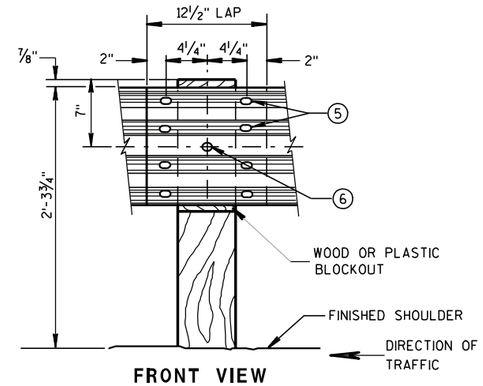

FRONT VIEW

BEAM SPLICE AT WOOD POST AND POST MOUNTING DETAIL

GENERAL NOTES

1. PROVIDE TYPE "H" SILVER REFLECTIVE SHEETING ON ALL REFLECTORS EXCEPT THOSE LOCATED ALONG THE LEFT EDGE OF ONE-WAY ROADWAYS, WHICH SHALL BE PROVIDED WITH TYPE "H" YELLOW REFLECTIVE SHEETING.
2. DO NOT INSTALL REFLECTORS ON THE FIRST 50 FEET OF THE APPROACH END OF THE ENERGY ABSORBING TERMINAL.
3. REVERSE EVERY OTHER REFLECTOR FOR 2-WAY VISIBILITY. THE CONTRACTOR MAY FURNISH TWO-SIDED REFLECTORS IN LIEU OF ONE-SIDED REFLECTORS.
4. PROVIDE AN ANGLE OF BEND OF 90° ± 1° FOR TWO-SIDED REFLECTORS.
5. 8 -⅝" Φ X 2 " BUTTON HEAD BOLTS WITH OVAL SHOULDERS & RECESS NUTS.
6. ⅝" Φ X 1'-6" BUTTON HEAD BOLT AND AND RECESS NUT WITH ROUND WASHER UNDER NUT.

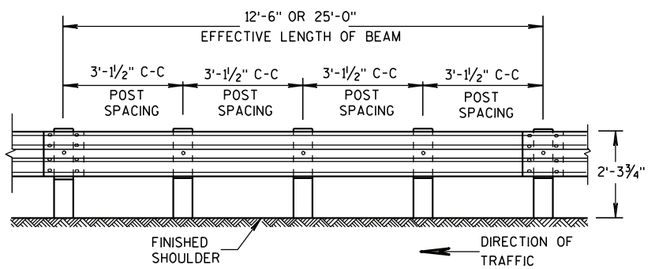

FRONT VIEW

POST SPACING FOR LONGER POST AT HALF POST SPACING W BEAM (LHW)

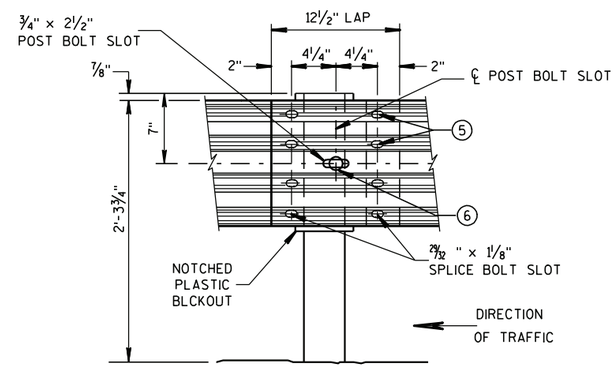

FRONT VIEW
BEAM SPLICE AT STEEL POST

TYPICAL SPLICING DETAILS OF STEEL PLATE BEAM GUARD

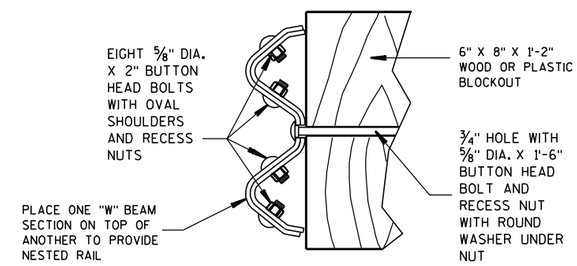

NESTED W BEAM (NW)

USE ALL OTHER STANDARD BEAM GUARD DETAILS FOR CONSTRUCTING NESTED W BEAM (NW)

REFLECTOR SPACING (2)

	BEAM GUARD LENGTH	REFLECTOR SPACING	NO. SURFACES REFLECTORIZED	MIN. NO. REFLECTORS
ONE WAY TRAFFIC	< 200' > 200'	50' C-C 100' C-C	1 1	3
TWO WAY TRAFFIC	< 200' > 200'	25' C-C 50' C-C	1 (3) 1	6
TWO WAY TRAFFIC	< 200' > 200'	50' C-C 100' C-C	2 (4) 2	3

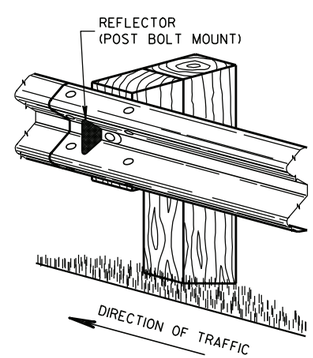

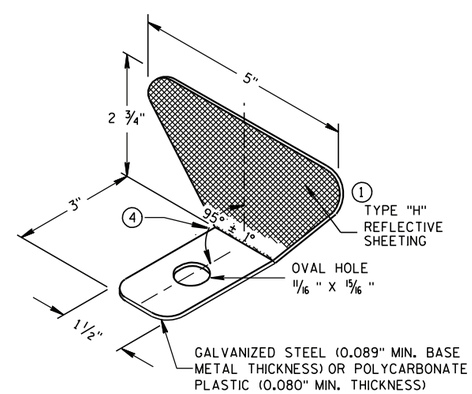

ONE SIDED REFLECTOR DETAIL AND TYPICAL INSTALLATION (1)

STEEL PLATE BEAM GUARD,
CLASS "A",
INSTALLATION & ELEMENTS

STATE OF WISCONSIN
DEPARTMENT OF TRANSPORTATION

6

6

S.D.D. 14 B 15-7b

S.D.D. 14 B 15-7b

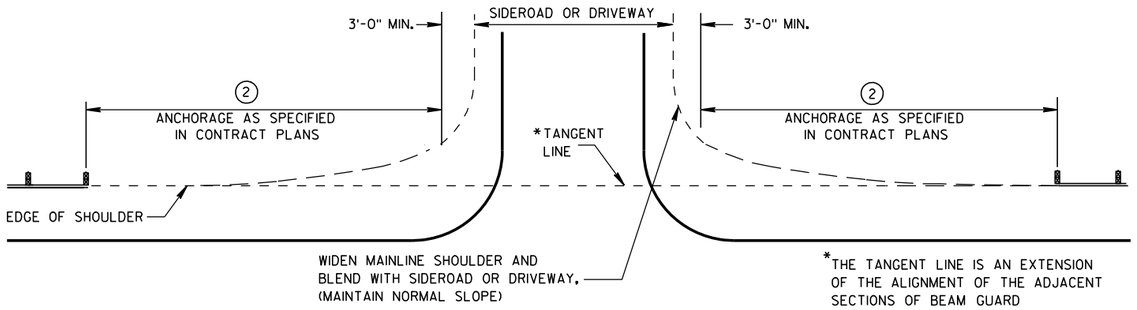

BEAM GUARD AT SIDEROADS OR DRIVEWAYS

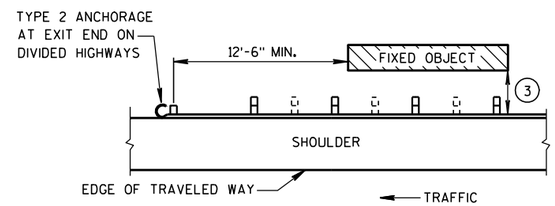

BEAM GUARD AT OBSTACLES EXIT END - ONE WAY TRAFFIC

GENERAL NOTES

DETAILS OF CONSTRUCTION, MATERIALS AND WORKMANSHIP SHALL CONFORM TO THE PERTINENT STANDARD SPECIFICATIONS AND THE APPLICABLE SPECIAL PROVISIONS.

W6 X 9 OR W6 X 8.5 STEEL POSTS WITH NOTCHED PLASTIC BLOCKOUTS ARE ACCEPTABLE ALTERNATIVES FOR 6" X 8" WOOD POSTS WITH WOOD OR PLASTIC BLOCKOUTS. USE APPROVED NOTCHED PLASTIC BLOCKOUTS WITH STEEL POSTS.

THE LOCATIONS AND LENGTHS OF BEAM GUARD ARE SHOWN ELSEWHERE IN THE PLAN.

1. STEEL THRIE BEAM STRUCTURAL APPROACH (STBSA) - SEE CURRENT SDD 14B20.
2. USE AN APPROVED END TREATMENT FOR THE TRAFFIC APPROACH SIDE OF BRIDGE/OBSTACLES. USE TYPE 2 ANCHORAGE ONLY AT THE DOWNSTREAM ENDS OF BEAM GUARD LOCATED ALONG ROADWAYS WITH ONE WAY TRAFFIC.
3.

MINIMUM LATERAL DISTANCE FROM FACE OF BEAM GUARD TO FIXED OBJECT	POST SPACING
3'-6"	3' - 1½"
4'-6"	6' - 3"

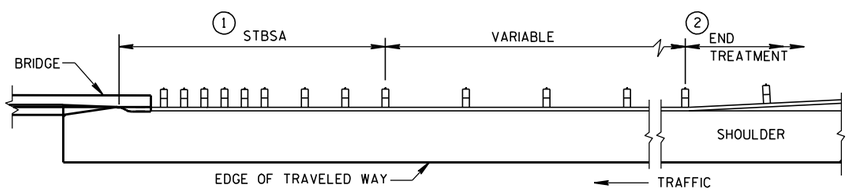

BEAM GUARD AT FULL WIDTH BRIDGES

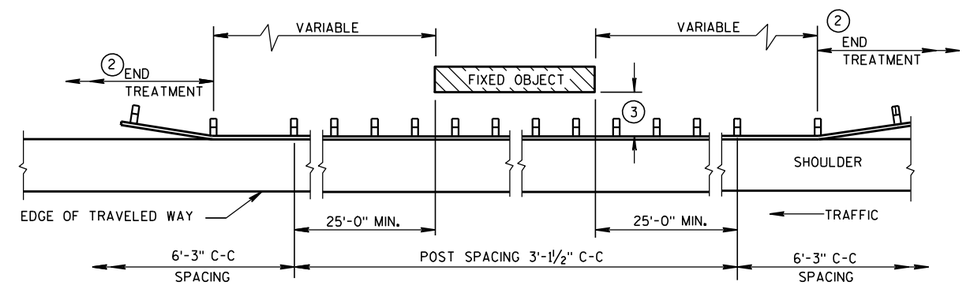

BEAM GUARD AT OBSTACLES - TWO WAY TRAFFIC

(RAIL TO OBSTACLE CLEARANCE 3'-6" TO 4'-6")

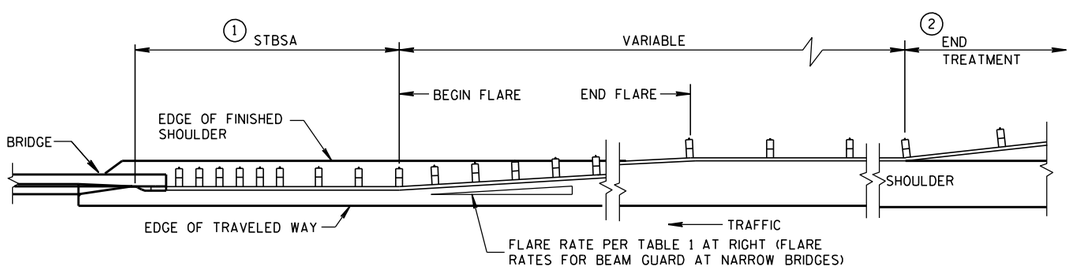

BEAM GUARD AT NARROW BRIDGES

(FLARED TO SHOULDER EDGE, THEN PARALLEL TO ROADWAY)

TABLE 1
FLARE RATES FOR BEAM GUARD AT NARROW BRIDGES

POSTED SPEED (MPH)	FLARE RATE
25	13:1
30	15:1
35	16:1
40	18:1
45	21:1
50	24:1
55	26:1
65	30:1

STEEL PLATE BEAM GUARD CLASS "A" AT BRIDGES, OBSTACLES AND SIDEROADS/DRIVEWAYS

STATE OF WISCONSIN
DEPARTMENT OF TRANSPORTATION

APPROVED
8-21-07 — DATE
/S/ Jerry H. Zogg — ROADWAY STANDARDS DEVELOPMENT ENGINEER
FHWA

6

6

S.D.D. 14 B 18-6a

S.D.D. 14 B 18-6a

GENERAL NOTES

1. WOOD OR STEEL POSTS (w6X9 OR w6X8.5) MAY BE USED. DO NOT INTERMIX WOOD AND STEEL POSTS. INSTALL STEEL POSTS WITH HOLES ON APPROACHING TRAFFIC SIDE.

2. USE WOOD OR APPROVED PLASTIC BLOCKOUTS. WOOD BLOCKOUTS MAY BE CONSTRUCTED OUT OF TWO OR MORE WOOD BLOCKOUTS. SEE ALTERNATE WOOD BLOCKOUT DETAIL. DIMENSIONS OF APPROVED PLASTIC BLOCKOUTS MAY VARY.

3. IF ROCK IS ENCOUNTERED DURING EXCAVATION, PROVIDE A HOLE 12 INCHES IN DIAMETER EXTENDING 20 INCHES DEEP INTO THE ROCK. PLACE APPROXIMATELY 2½INCHES OF GRANULAR MATERIAL IN THE BOTTOM OF THE HOLE. CUT THE POSTS THE TO LENGTH AMD INSTALL. BACKFILL WITH EXCAVATED MATERIAL AND COMPACT. BACKFILL IS TO BE FREE OF LARGE ROCKS.

4. WHEN THE DISTANCE FROM BACK OF POST TO SHOULDER HINGE POINT IS LESS THAN 2 FEET INSTALL LONGER POST AT HALF POST SPACING (K).

5. FOR NEW MGS INSTALLATION TOP OF W-BEAM RAIL TOLERANCE IS ± 1". FOR EXISTING MGS INSTALLATION TOP OF W-BEAM IS BETWEEN 27¾" TO 32".

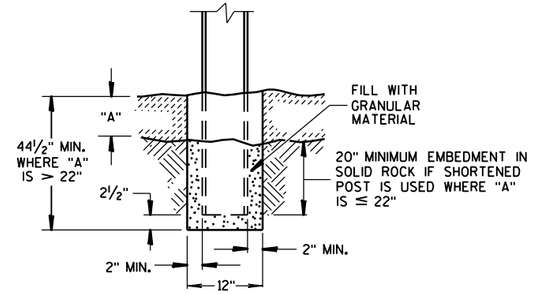

END VIEW
SETTING STEEL OR WOOD POST IN ROCK (3)

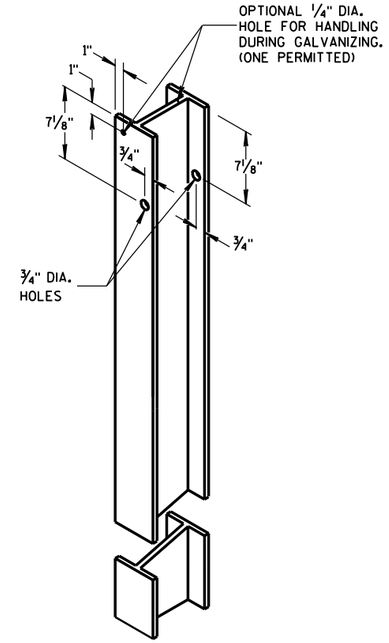

STEEL POST &
HOLE PUNCHING DETAIL
(w6X9) (1)

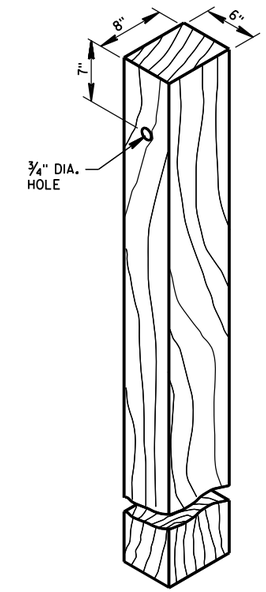

WOOD POST
(6" X 8") NOMINAL (1)

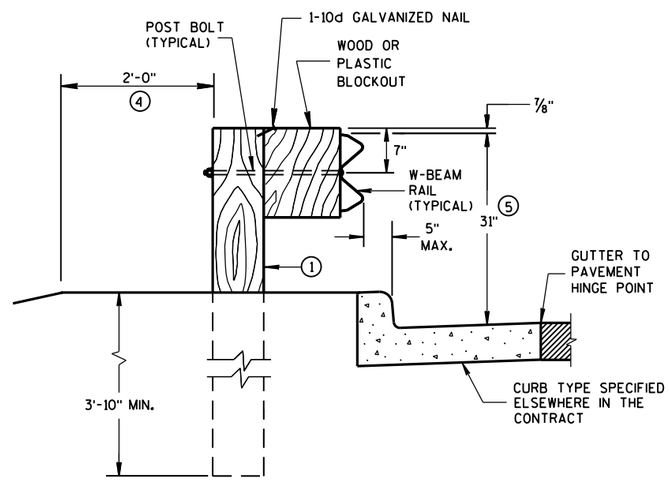

END VIEW
LOCATED ALONG A CURBED ROADWAY

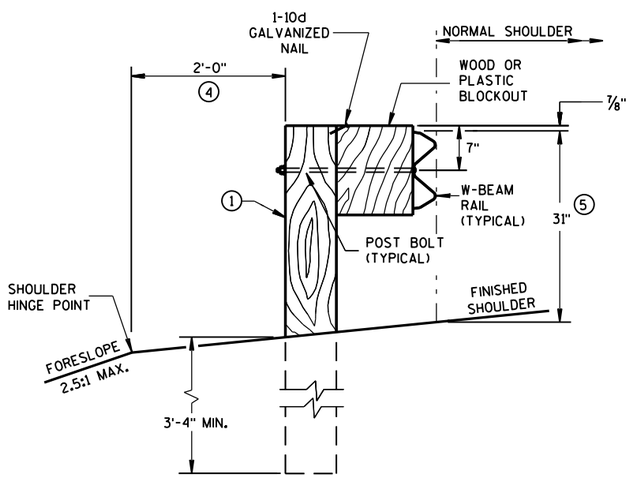

END VIEW
LOCATED ALONG A ROADWAY SHOULDER
STANDARD INSTALLATION

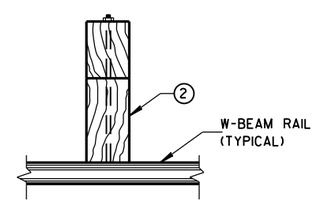

PLAN VIEW
WOOD POST,
BLOCKOUT & BEAM

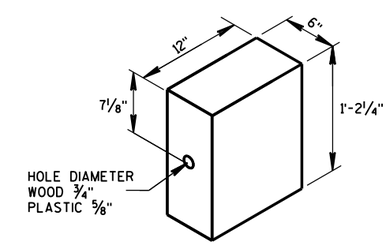

WOOD OR
PLASTIC BLOCKOUT (2)

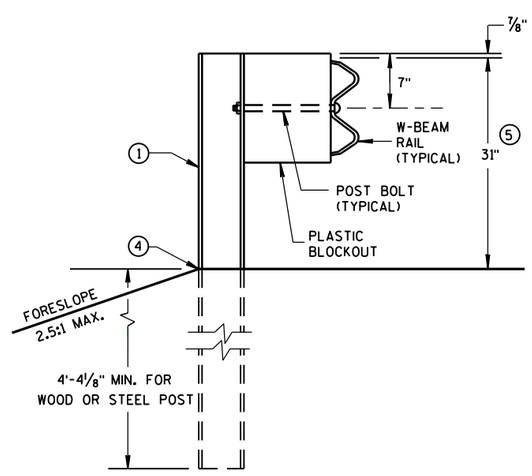

END VIEW
MGS LONGER POST AT HALFPOST SPACING W BEAM (K)

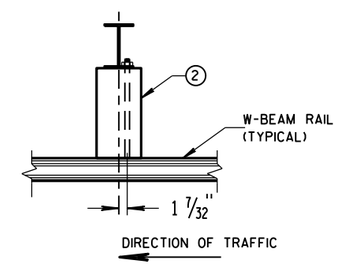

PLAN VIEW
STEEL POST,
PLASTIC BLOCKOUT & BEAM

MIDWEST GUARDRAIL SYSTEM
(MGS) GUARDRAIL

STATE OF WISCONSIN
DEPARTMENT OF TRANSPOI

6
S.D.D. 14 B 42-2a

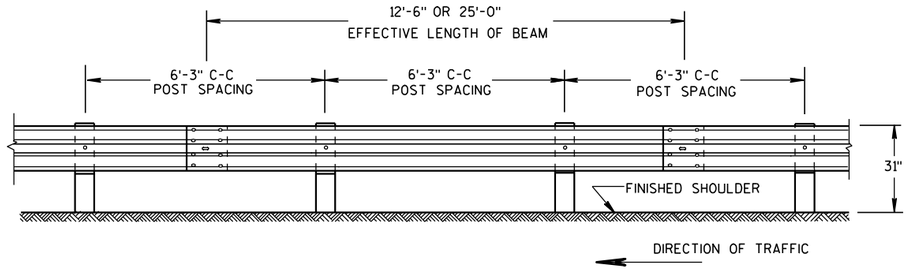

FRONT VIEW

POST SPACING STANDARD INSTALLATION

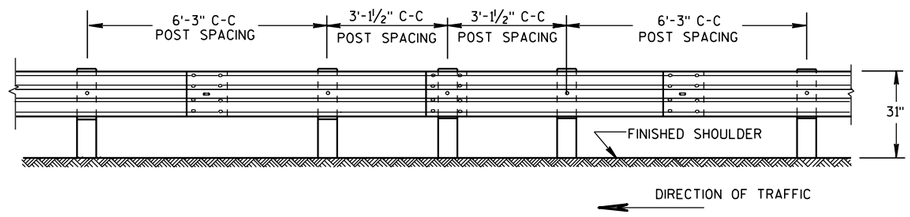

FRONT VIEW

HALF POST SPACING (HS) AND HALF POST SPACING WITH LONGER POSTS (K)

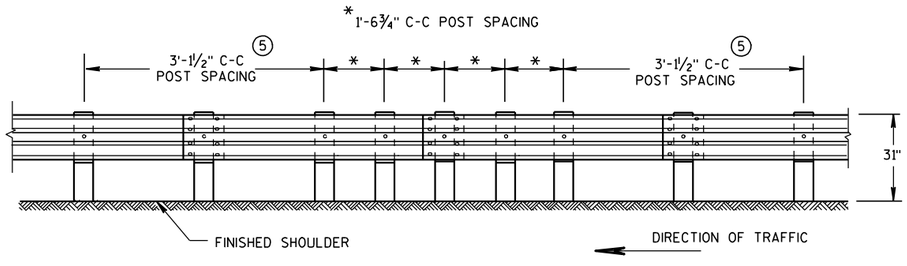

FRONT VIEW

QUARTER POST SPACING (QS)

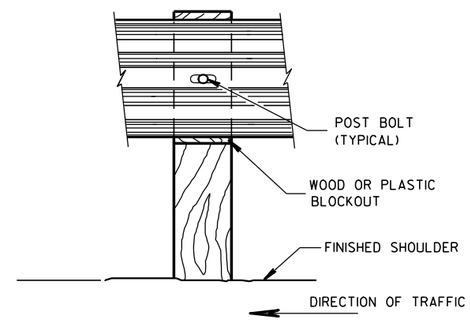

FRONT VIEW AT WOOD POST

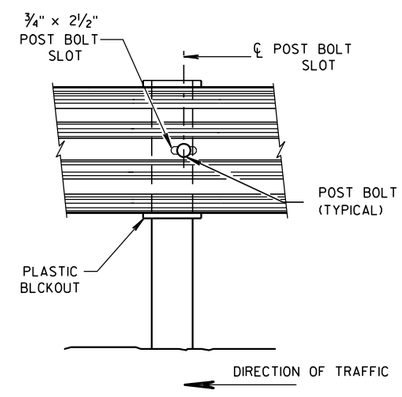

FRONT VIEW AT STEEL POST

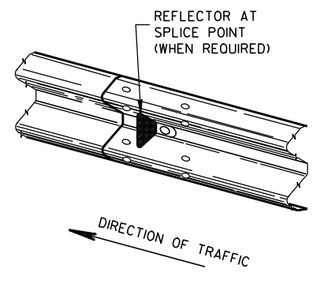

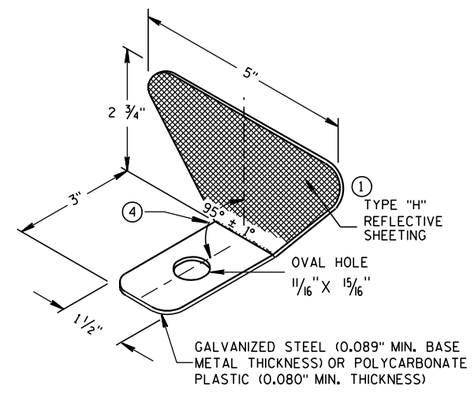

ONE SIDED REFLECTOR DETAIL AND TYPICAL INSTALLATION 1

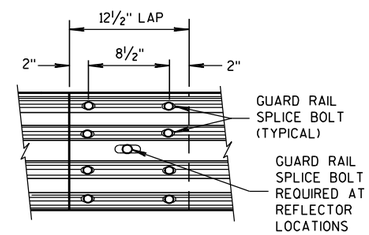

FRONT VIEW

MID-SPAN BEAM SPLICE

GENERAL NOTES

1. PROVIDE TYPE "H" SILVER REFLECTIVE SHEETING ON ALL REFLECTORS EXCEPT THOSE LOCATED ALONG THE LEFT EDGE OF ONE-WAY ROADWAYS, WHICH SHALL BE PROVIDED WITH TYPE "H" YELLOW REFLECTIVE SHEETING.
2. DO NOT INSTALL REFLECTORS ON THE FIRST 50 FEET OF THE APPROACH END OF THE ENERGY ABSORBING TERMINAL. RAIL SPLICE LOCATIONS ARE THE ONLY ACCEPTABLE LOCATIONS FOR REFLECTORS.
3. REVERSE EVERY OTHER REFLECTOR FOR 2-WAY VISIBILITY. THE CONTRACTOR MAY FURNISH TWO-SIDED REFLECTORS IN LIEU OF ONE-SIDED REFLECTORS.
4. PROVIDE AN ANGLE OF BEND OF 90° ± 1° FOR TWO-SIDED REFLECTORS.
5. 25 FEET OF HALF POST SPACING IS REQUIRED ON APPROACH AND DEPARTURE ENDS OF QUARTER POST SPACING.

POST BOLTS ARE A ⅝" DIAMETER ASTM A307 GUARDRAIL BOLT. A POST BOLT REQUIRES ⅝" DIAMETER A563A DOUBLE RECESSED (DR) HEAVY HEX NUT AND ⅝" DIAMETER F844 FLAT WASHER. POST BOLTS MAY BE LONGER IF MULTIPLE BLOCKOUTS ARE BEING USED.

GUARD RAIL SPLICE BOLTS ARE A ⅝" DIAMETER ASTM A307 GUARDRAIL HEAD BOLT. A GUARDRAIL SPLICE BOLT REQUIRES ⅝" DIAMETER A563A DOUBLE RECESSED (DR) HEAVY HEX NUT.

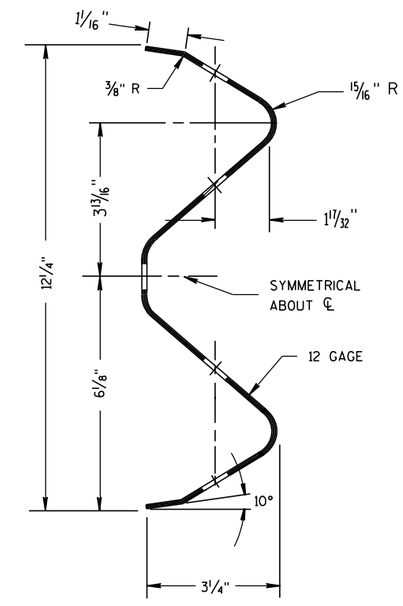

SECTION THRU W-BEAM RAIL

REFLECTOR SPACING 2

	BEAM GUARD LENGTH	REFLECTOR SPACING	NO. SURFACES REFLECTORIZED	MIN. NO. REFLECTORS
ONE WAY TRAFFIC	< 200' > 200'	50' C-C 100' C-C	1 1	3
TWO WAY TRAFFIC	< 200' > 200'	25' C-C 50' C-C	1 3 1	6
TWO WAY TRAFFIC	< 200' > 200'	50' C-C 100' C-C	2 4 2	3

MIDWEST GUARDRAIL SYSTEM
(MGS) GUARDRAIL

STATE OF WISCONSIN
DEPARTMENT OF TRANSPORTATION

6

6

S.D.D. 14 B 42-2b

S.D.D. 14 B 42-2b

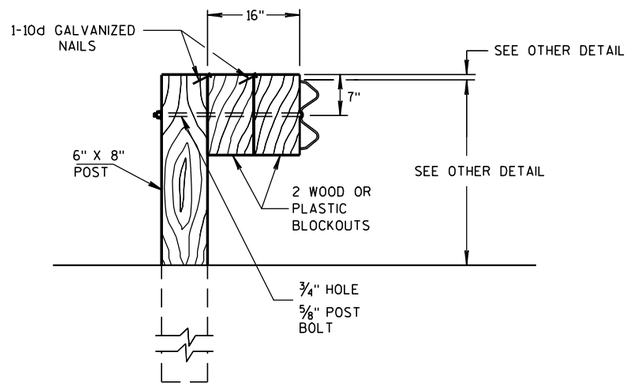

DETAIL FOR 16" BLOCKOUT DEPTH

IT IS ACCEPTABLE TO USE BLOCKOUTS UP TO 16" DEEP TO INCREASE THE POST OFFSET TO AVOID UNDERGROUND OBSTACLES. THERE IS NO LIMIT TO THE NUMBER OF POSTS THAT CAN HAVE ADDITIONAL BLOCKOUTS UP TO 16" DEEP.

NOTE: 1. ALL FILLETS SHALL HAVE A MINIMUM RADIUS OF 1/16".
2. IF THE BOLT EXTENDS MORE THAN 1/4" FROM THE NUT THE BOLT SHOULD BE TRIMMED BACK.

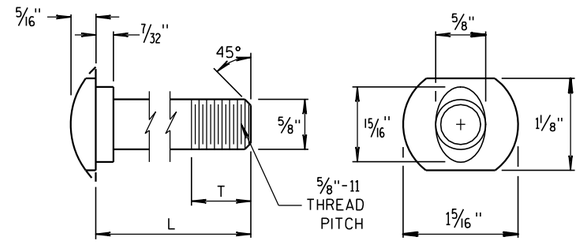

POST BOLT TABLE

L	T (MIN.)
1 1/4"	1 1/8"
2"	1 3/4"
10"	4"
14"	4 1/16"
18"	4"
21"	4 1/16"
25"	4"

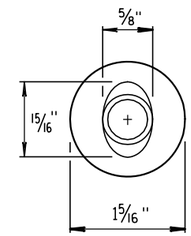

ALTERNATE BOLT HEAD

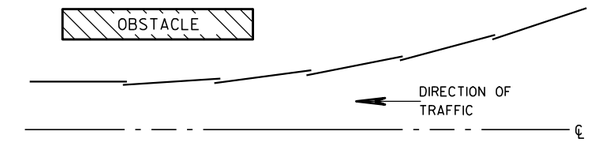

PLAN VIEW

BEAM LAPPING DETAIL

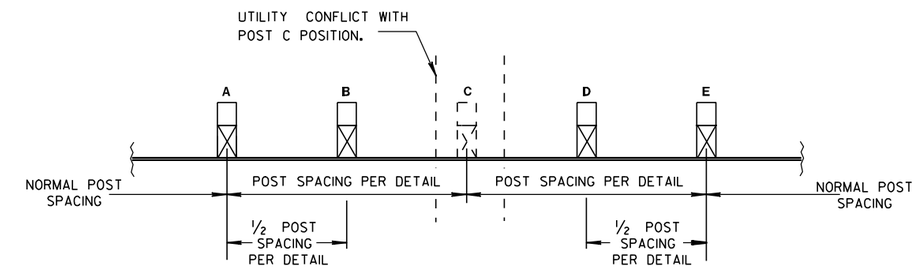

POST DRIVING FOR CONTINUOUS UNDERGROUND OBSTRUCTION

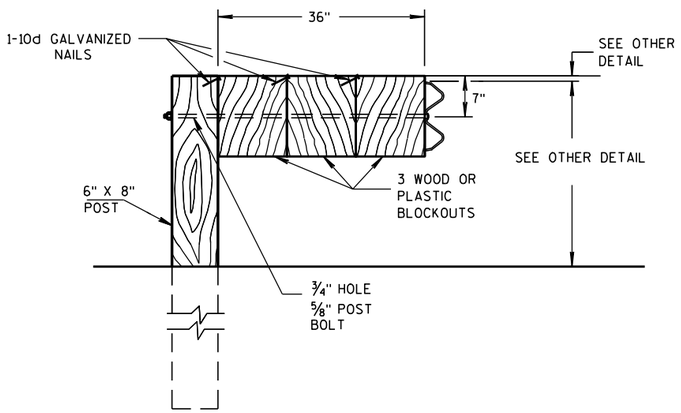

DETAIL FOR 36" BLOCKOUT DEPTH

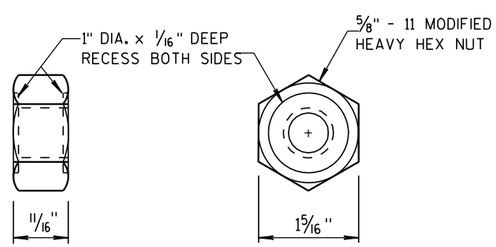

POST BOLT AND RECESS NUT

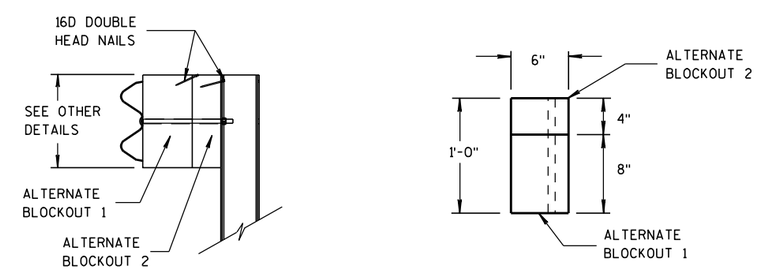

SIDE VIEW TOP VIEW

ALTERNATE WOOD BLOCKOUT DETAIL

NOTES: UNDER SPECIAL CIRCUMSTANCES, SUCH AS AVOIDING OBSTACLES THAT ARE NOT RELOCATED, IT IS ACCEPTABLE TO INSTALL ADDITIONAL BLOCKOUTS TO OBTAIN UP TO 36" DEPTH FOR ONE OR TWO POSTS IN A SECTION OF GUARDRAIL.

DO NOT USE 16" OR 36" BLOCKOUTS IF IT CAUSES THE POST TO BE DRIVEN BEYOND SHOULDER HINGE POINT OR CAUSES A FIXED OBJECT TO BE WITHIN THE DEFLECTION DISTANCE OF THE BARRIER.

MIDWEST GUARDRAIL SYSTEM (MGS) GUARDRAIL

STATE OF WISCONSIN
DEPARTMENT OF TRANSPORTATION

APPROVED
11/15/2011 DATE
/S/ Jerry H. Zogg
ROADWAY STANDARDS ENGINEER
FHWA

6

S.D.D. 14 B 42-2c

GENERAL NOTES

POSTS 1 THROUGH 3 ARE CRT POSTS.
ALL OTHER POSTS SHALL BE WOOD OR STEEL.

SEE SDD 14 B 42 FOR MORE DETAILS.

Ⓐ THE MINIMUM OFFSET FROM BACK OF POST TO BACK OF STRUCTURE IS ZERO. LARGER OFFSETS ARE ACCEPTABLE.

Ⓑ FLARE FOR MGS EAT SHOWN. IF INSTALLING MGS NO FLARE NEEDED.

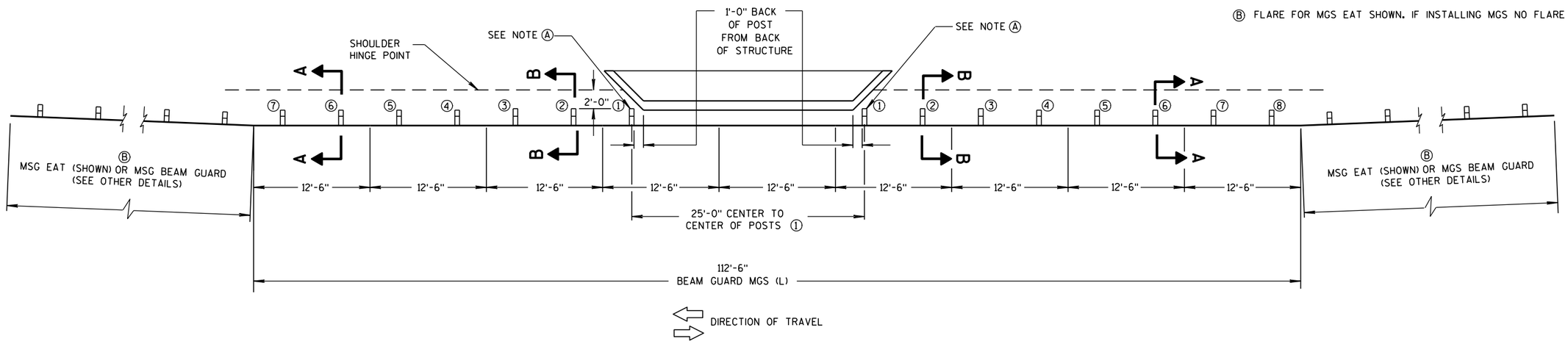

PLAN VIEW

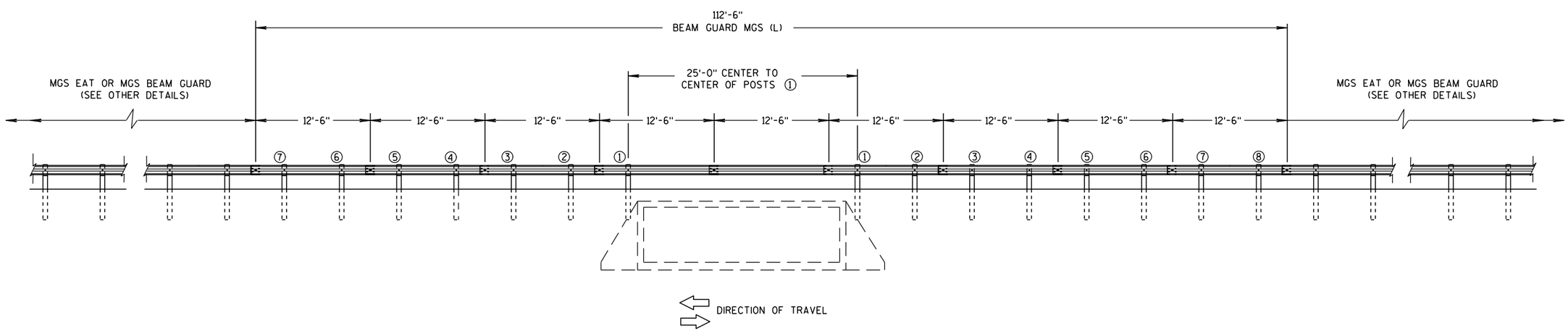

ELEVATION VIEW

MIDWEST GUARDRAIL SYSTEM LONG SPAN MGS (L) TWO-WAY TRAFFIC

MIDWEST GUARDRAIL SYSTEM
LONG SPAN MGS (L)

STATE OF WISCONSIN
DEPARTMENT OF TRANSPORTATION

GENERAL NOTES

POSTS 1 THROUGH 3 ARE CRT POSTS.
ALL OTHER POSTS SHALL BE WOOD OR STEEL.

SEE SDD 14 B 42 FOR MORE DETAILS.

Ⓐ THE MINIMUM OFFSET FROM BACK OF POST TO BACK OF STRUCTURE IS ZERO. LARGER OFFSETS ARE ACCEPTABLE.

Ⓑ FLARE FOR MGS EAT SHOWN. IF INSTALLING MGS NO FLARE NEEDED.

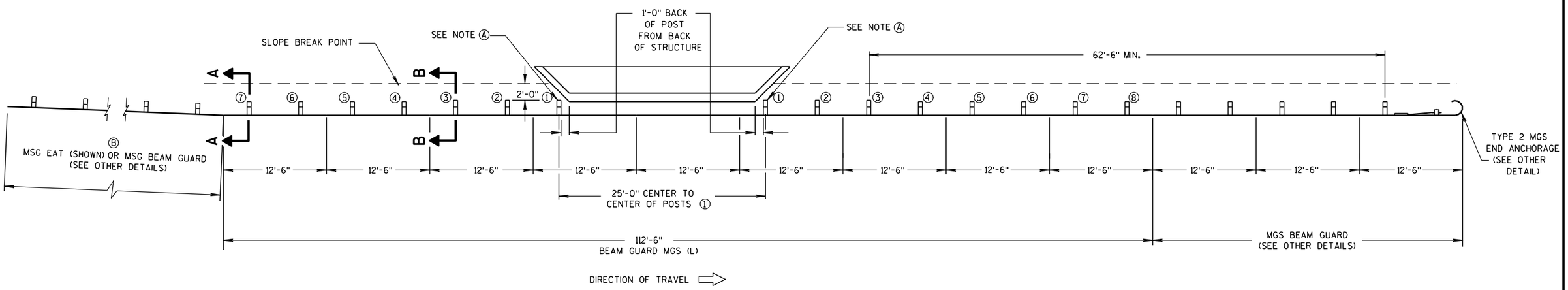

PLAN VIEW

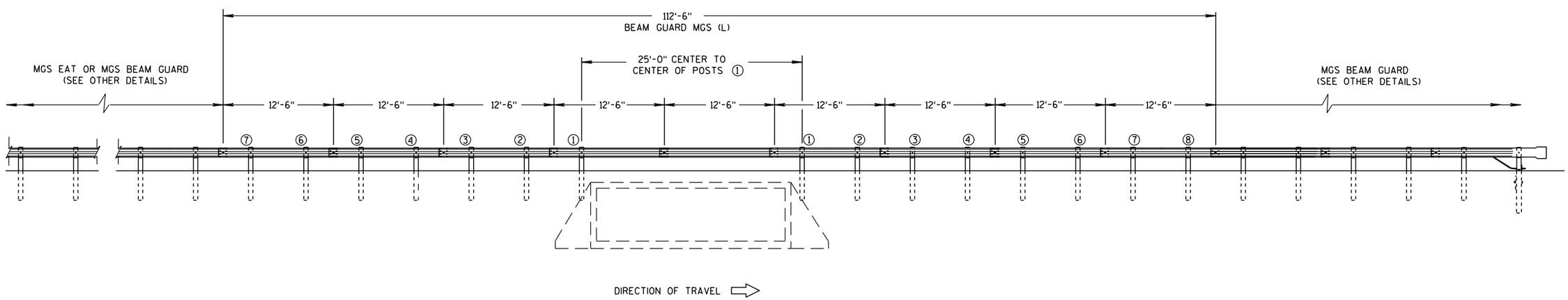

ELEVATION VIEW

MIDWEST GUARDRAIL SYSTEM LONG SPAN MGS (L) ONE-WAY TRAFFIC

MIDWEST GUARDRAIL SYSTEM
LONG SPAN MGS (L)

STATE OF WISCONSIN
DEPARTMENT OF TRANSPORTATION

6

6

S.D.D. 15 C 43-1b

S.D.D. 14 B 43-1b

GENERAL NOTES

(C) TOLERANCE FOR TOP OF W-BEAM RAIL IS ± 1".

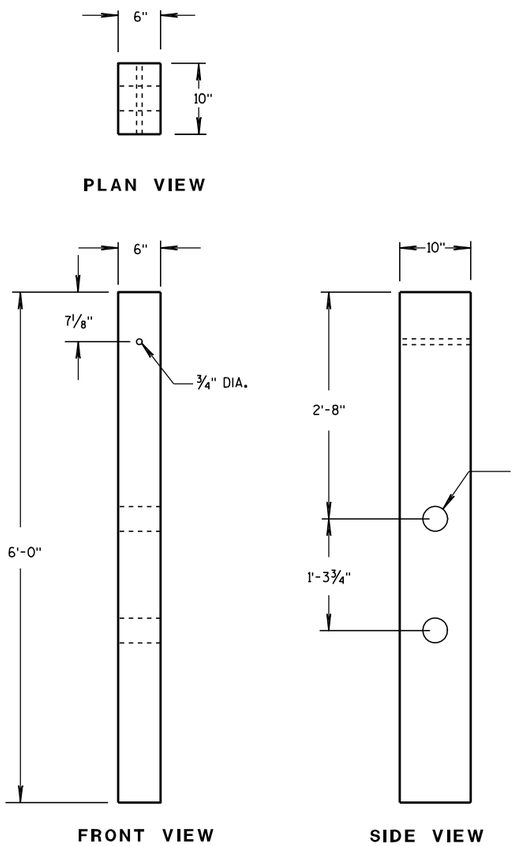

CRT WOOD POST

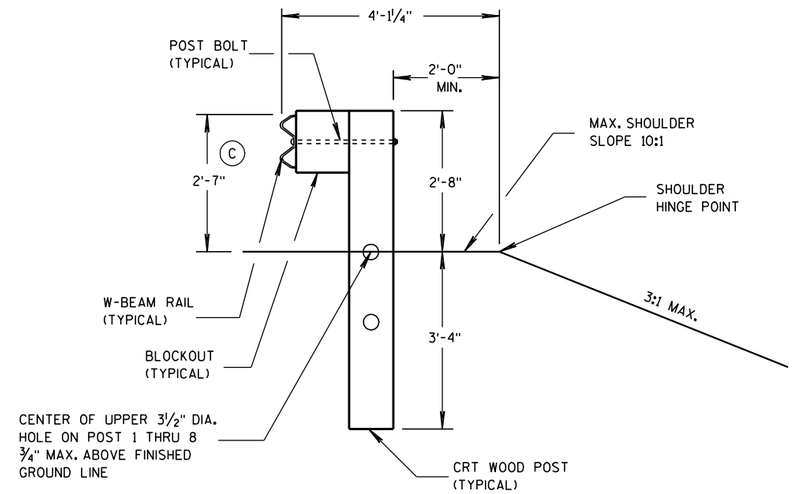

SECTION B-B

POSTS NO. 1-3

SEE OTHER DETAILS

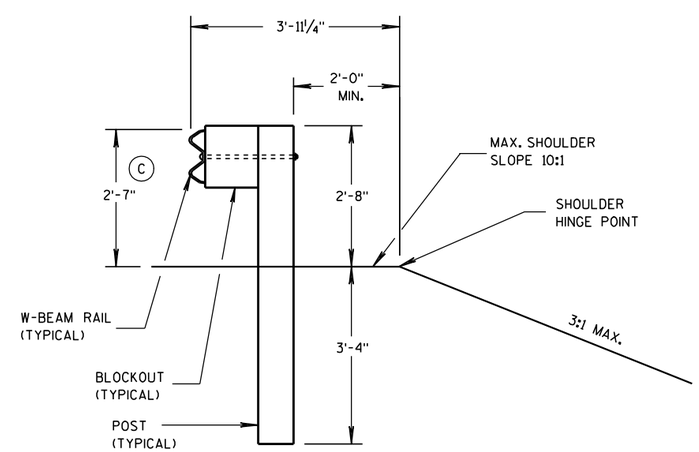

SECTION A-A

POSTS NO. 4-8

SEE OTHER DETAILS

MIDWEST GUARDRAIL SYSTEM
LONG SPAN MGS (L)

STATE OF WISCONSIN
DEPARTMENT OF TRANSPORTATION

APPROVED

5/23/2011 — DATE

/S/ Jerry H. [illegible] — ROADWAY STANDARDS DEVELOPMENT ENGINEER

FHWA

6

6

S.D.D. 14 B 43-1c

S.D.D. 14 B 43-1c

GENERAL NOTES

POSTS 1 THROUGH 3 ARE CRT POSTS.
ALL OTHER POSTS SHALL BE WOOD OR STEEL.

SEE SDD 14 B 42 FOR MORE DETAILS.

Ⓐ THE MINIMUM OFFSET FROM BACK OF POST TO BACK OF STRUCTURE IS ZERO. LARGER OFFSETS ARE ACCEPTABLE.

Ⓑ FLARE FOR MGS EAT SHOWN. IF INSTALLING MGS NO FLARE NEEDED.

Ⓒ VALUES SHOWN ON DRAWING REPRESENT THE MAXIMUM LENGTH. SHORTER DIMENSIONS ARE POSSIBLE. SEE OTHER SECTION OF PLAN FOR MORE INFORMATION.

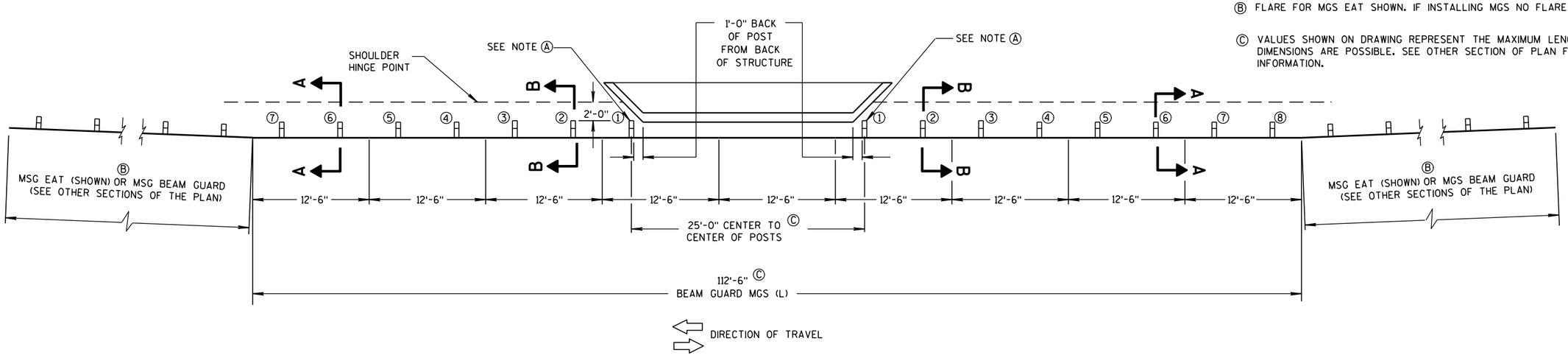

PLAN VIEW

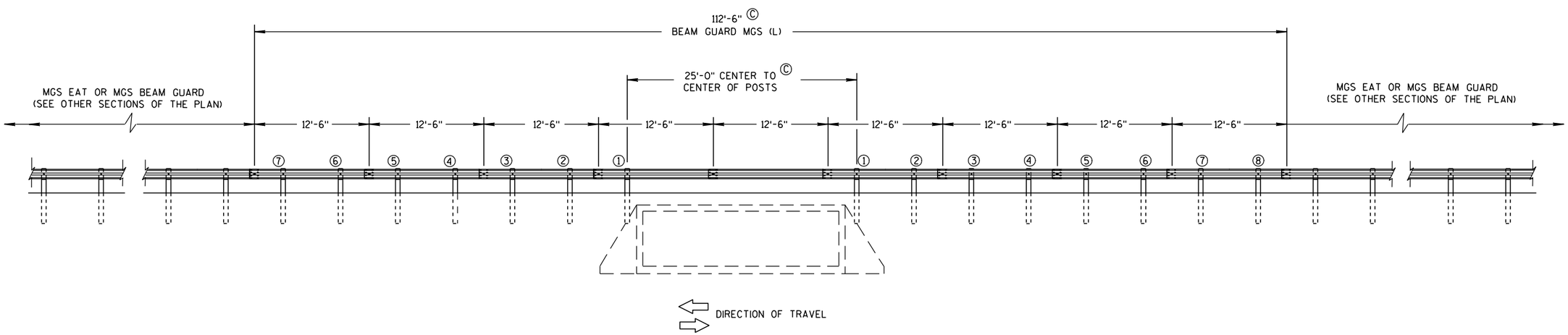

ELEVATION VIEW

MIDWEST GUARDRAIL SYSTEM LONG SPAN MGS (L) TWO-WAY TRAFFIC

MIDWEST GUARDRAIL SYSTEM
LONG SPAN MGS (L)

STATE OF WISCONSIN
DEPARTMENT OF TRANSPORTATION

6
S.D.D. 14 B 43-2a

GENERAL NOTES

POSTS 1 THROUGH 3 ARE CRT POSTS.
ALL OTHER POSTS SHALL BE WOOD OR STEEL.

SEE SDD 14 B 42 FOR MORE DETAILS.

Ⓐ THE MINIMUM OFFSET FROM BACK OF POST TO BACK OF STRUCTURE IS ZERO. LARGER OFFSETS ARE ACCEPTABLE.

Ⓑ FLARE FOR MGS EAT SHOWN. IF INSTALLING MGS NO FLARE NEEDED.

Ⓒ VALUES SHOWN ON DRAWING REPRESENT THE MAXIMUM LENGTH. SHORTER DIMENSIONS ARE POSSIBLE. SEE OTHER SECTION OF PLAN FOR MORE INFORMATION.

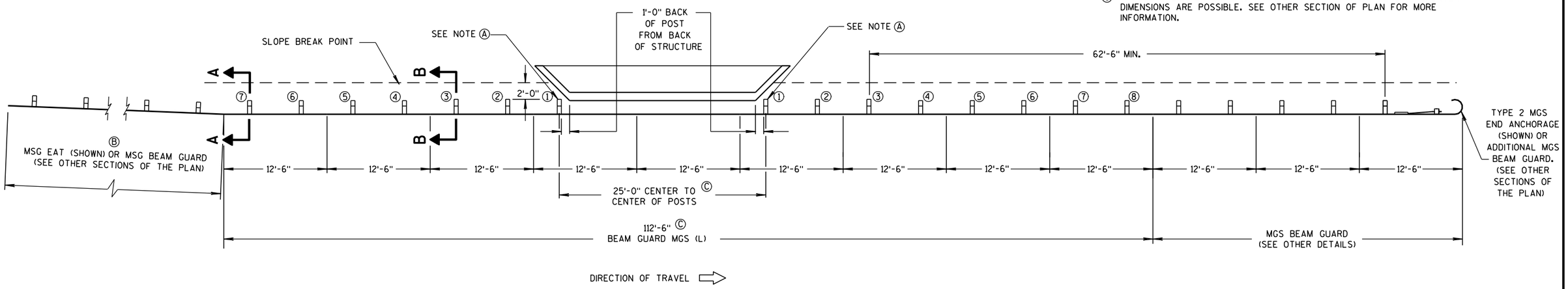

PLAN VIEW

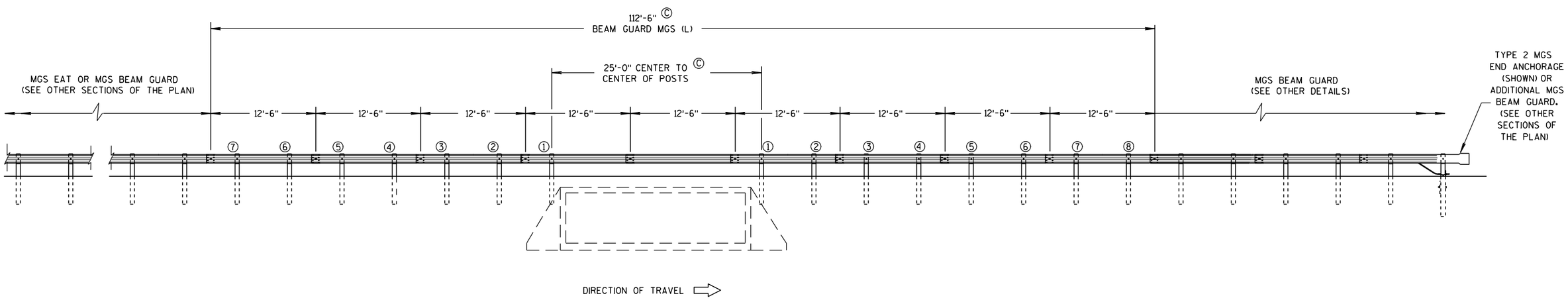

ELEVATION VIEW

MIDWEST GUARDRAIL SYSTEM LONG SPAN MGS (L) ONE-WAY TRAFFIC

MIDWEST GUARDRAIL SYSTEM
LONG SPAN MGS (L)

STATE OF WISCONSIN
DEPARTMENT OF TRANSPORTATION

6
S.D.D. 14 B 43-2b

GENERAL NOTES

(D) TOLERANCE FOR TOP OF W-BEAM RAIL IS ± 1".

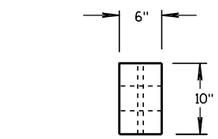

PLAN VIEW

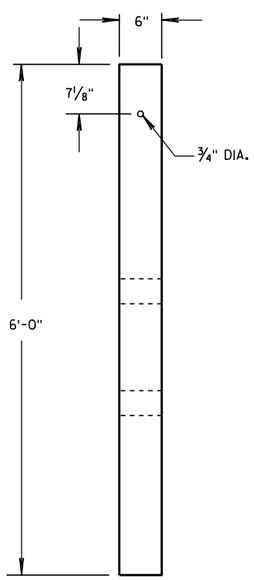

FRONT VIEW

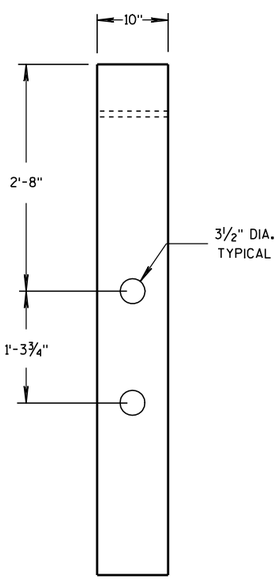

SIDE VIEW

CRT WOOD POST

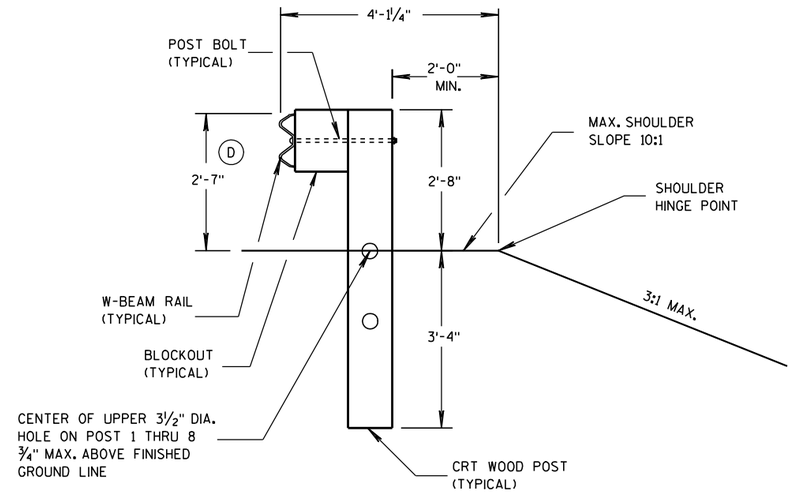

SECTION B-B

POSTS NO. 1-3

SEE OTHER DETAILS

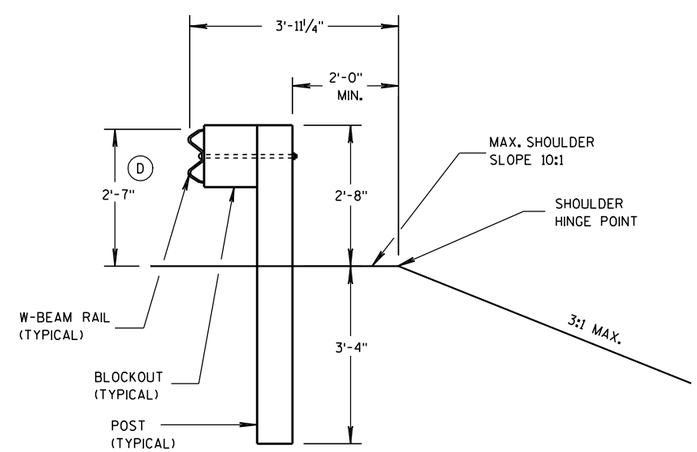

SECTION A-A

POSTS NO. 4-8

SEE OTHER DETAILS

MIDWEST GUARDRAIL SYSTEM
LONG SPAN MGS (L)

STATE OF WISCONSIN
DEPARTMENT OF TRANSPORTATION

APPROVED

8/31/2012	/S/ Jerry H. Zogg	
DATE	ROADWAY STANDARDS ENGINEER	ENT

FHWA

6

6

S.D.D. 14 B 43-2c

S.D.D. 14 B 43-2c

GENERAL NOTES

(A) THE SLOPE IN THE AREA BOUNDED BY THE EXTENDED VEHICLE RUNOUT PATH (EVRP), THE HINGE POINT LINE (HPL), AND THE CLEAR ZONE LIMITS (CZL) SHALL BE 4:1 OR FLATTER.

(B) AFTER FINAL ASSEMBLY, RECHECK CABLE TO BE SURE IT IS TAUT AND HAS NOT RELAXED.

(C) DIFFERENT MANUFACTURES REQUIRE DIFFERENT PERFORATED W-BEAM RAIL END PANELS. SEE MANUFACTURES INFORMATION.

(D) THE TOP OF THE STEEL TUBE ON POST 1 AND POST 2 SHALL NOT BE MORE THAN 3" ABOVE THE FINISH GROUND ELEVATION.

(F) SHEETING IS ATTACHED TO 0.040 ALUMINUM SHEET AND ATTACHED TO E.A.T. HEAD USING 4 STAINLESS STEEL SELF-TAPPING SCREWS. ONE SCREW PER CORNER OF E.A.T.

(G) ½" DIAMETER X 3" LONG LAG BOLT AND WASHER.

(H) HARDWARE VARIES BETWEEN DIFFERENT MANUFACTURES. SEE MANUFACTURE'S DRAWING FOR INFORMATION.

(I) DIMENSIONS MAY VARY. SEE MANUFACTURE'S INFORMATION.

SEE SDD 14B42 FOR MORE INFORMATION.

* DO NOT ATTACH BLOCKOUTS TO POSTS 1 AND 2.

DO NOT INSTALL REFLECTORS ON THE FIRST 50 FEET OF THE APPROACH END OF THE ENERGY ABSORBING TERMINAL.

W-BEAM RAIL SPLICES ARE LOCATED AT POST NUMBER 3, AND BETWEEN POST 5 AND 6, BETWEEN POSTS 7 AND 8, AND MIDDLE OF THE SPAN AFTER POST 9.

PATTERN AND COLORS ON REFLECTIVE SHEETING TYPE H ARE TO CONFORM TO OM3-L OR OM3-R OF THE MANUAL ON UNIFORM TRAFFIC CONTROL DEVICES.

THE CENTER OF THE UPPER 3½" DIAMETER HOLE ON POST NUMBER 3 THROUGH POST 9 IS TO BE FLUSH WITH THE GROUND LINE (± ¾")

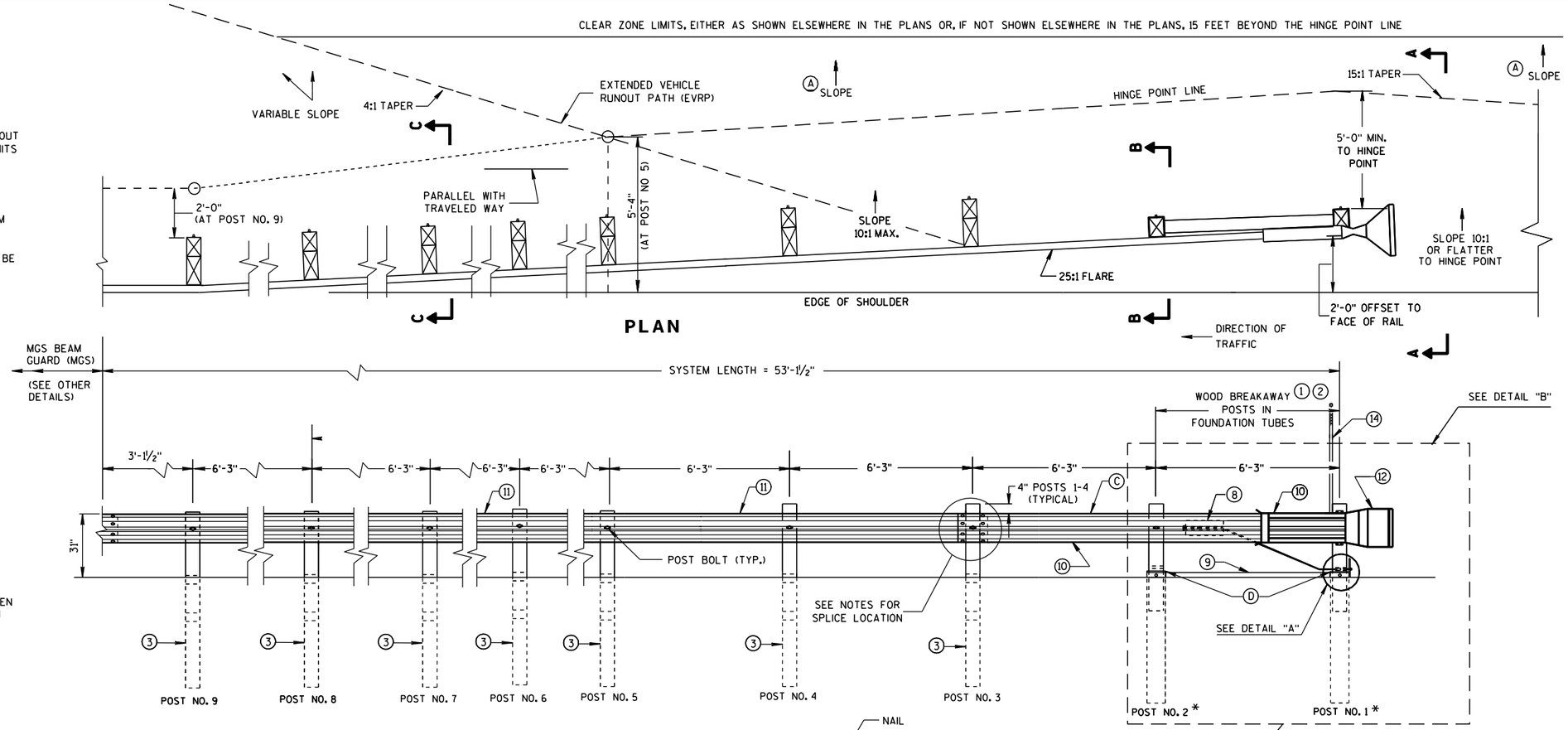

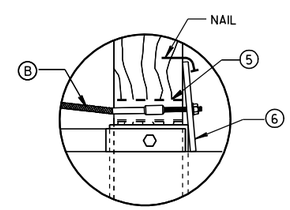

DETAIL "A"

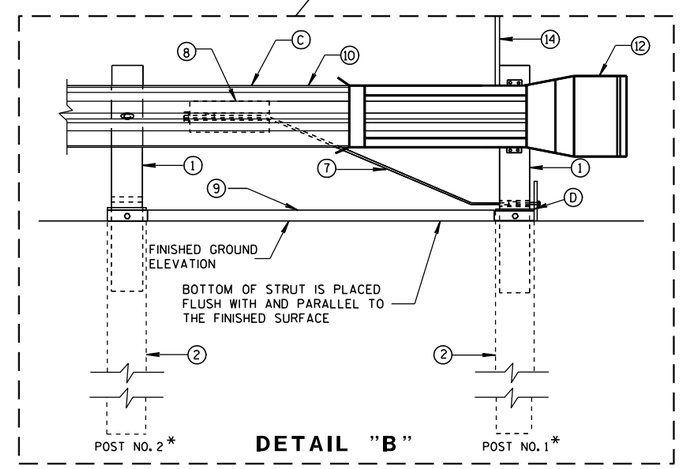

DETAIL "B"

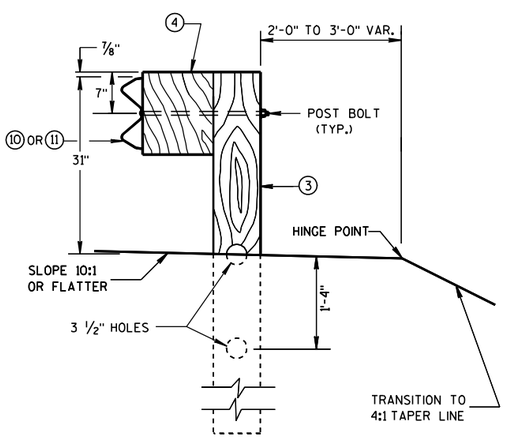

SECTION C-C
TYPICAL AT POST NOS. 3-9

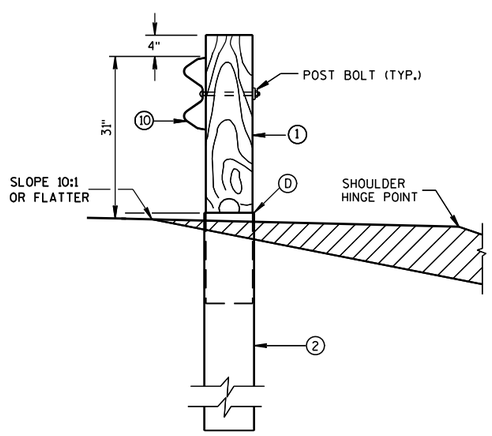

SECTION B-B
TYPICAL AT POST NO. 2*

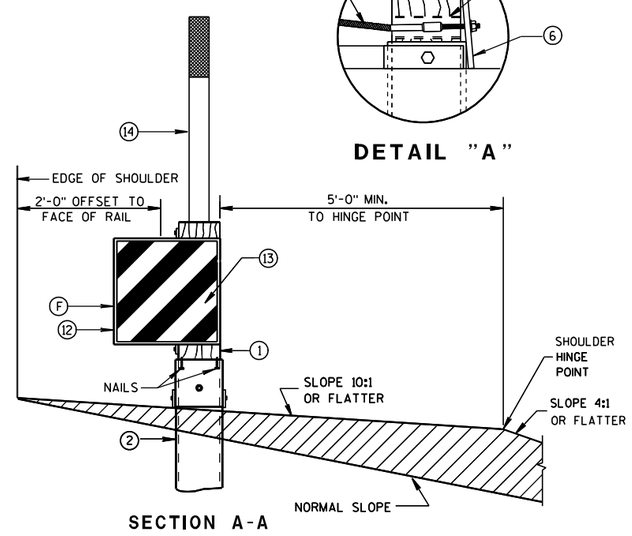

SECTION A-A
TYPICAL AT POST NO. 1*

MIDWEST GUARDRAIL SYSTEM ENERGY ABSORBING TERMINAL (MGS)

STATE OF WISCONSIN
DEPARTMENT OF TRANSPORTATION

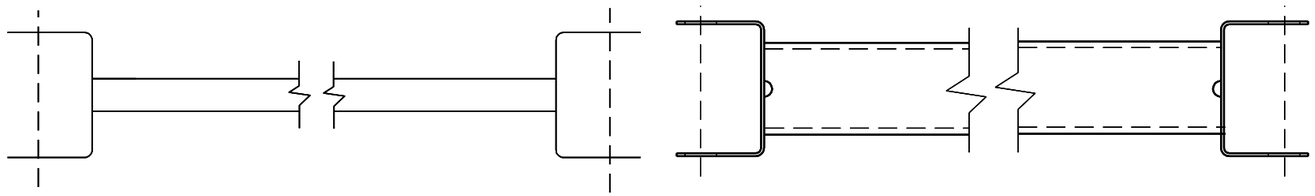

(9) (H)

GENERIC GROUND STRUT

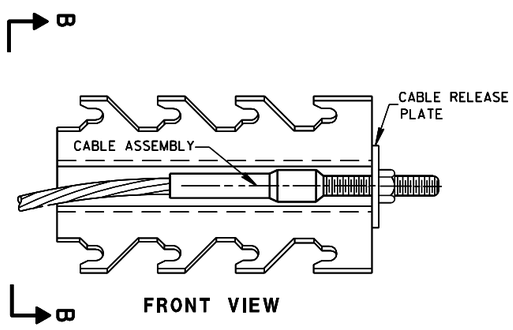

FRONT VIEW

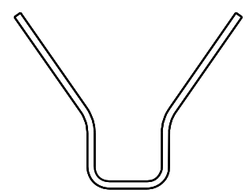

SECTION B-B

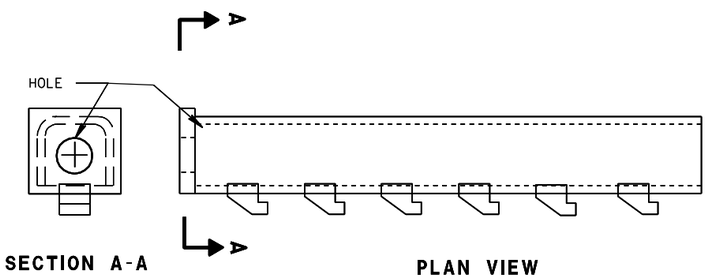

SECTION A-A

PLAN VIEW

(8) (H)

GENERIC ANCHOR CABLE BOX

BILL OF MATERIALS

PART NO.	DESCRIPTION MATERIALS PROVIDED BY MGS EAT MANUFACTURER. SEE MANUFACTURER'S DETAILS FOR MORE INFORMATION.
1	WOOD BREAKAWAY POST
2	6" X 8" X 0.188", 6'-0" LONG FOUNDATION TUBE AT POSTS 1 AND 2
3	WOOD CRT
4	WOOD BLOCKOUT
5	PIPE SLEEVE
6	BEARING PLATE
7	BCT CABLE ASSEMBLY
8	ANCHOR CABLE BOX
9	GROUND STRUT
10	PERFORATED W-BEAM RAIL END PANEL, 12'-6" LONG.
11	STANDARD W-BEAM RAIL. MULTIPLE SECTIONS REQUIRED. SECTIONS VARY IN LENGTH.
12	END SECTION EAT
13	0.040" ALUMINUM SHEET WITH REFLECTIVE SHEETING TYPE H (ONLY THE SHEETING IS SUPPLIED BY THE MANUFACTURER)
14	EAT MARKER POST - YELLOW (SEE APPROVED PRODUCTS LIST)

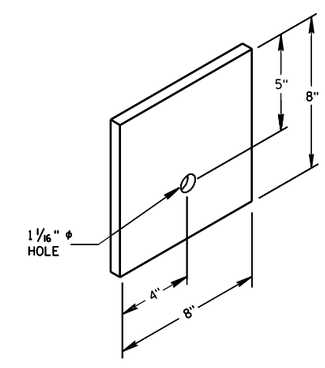

BEARING PLATE (6)

MIDWEST GUARDRAIL SYSTEM
ENERGY ABSORBING TERMINAL
(MGS)

STATE OF WISCONSIN
DEPARTMENT OF TRANSPORTATION

6

6

S.D.D. 14 B 44-1b

S.D.D. 14 B 44-1b

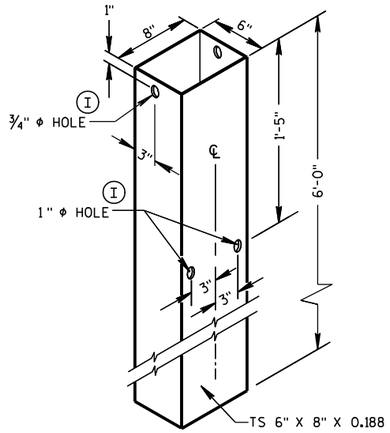

FOUNDATION TUBE (2)

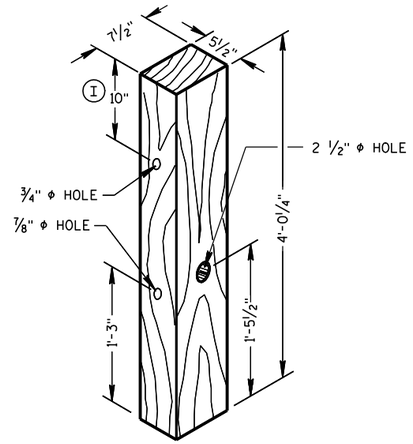

POSTS NUMBER 1 AND 2

WOOD BREAKAWAY POST (1)

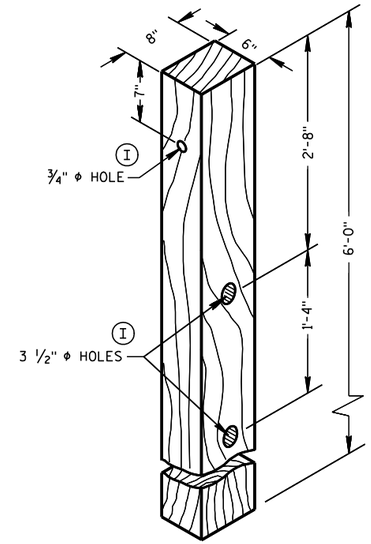

POSTS NUMBER 3-9

WOOD CRT POST (3)

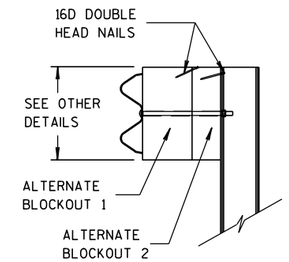

SIDE VIEW

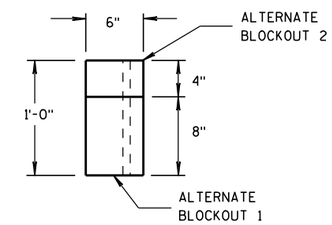

TOP VIEW

ALTERNATE WOOD BLOCKOUT DETAIL

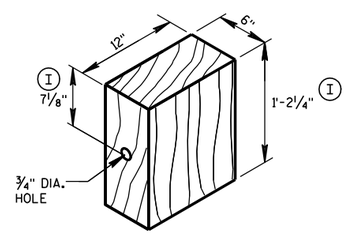

WOOD BLOCKOUT (4)

REQ'D. AT ALL POSTS EXCEPT POST NO'S 1 & 2

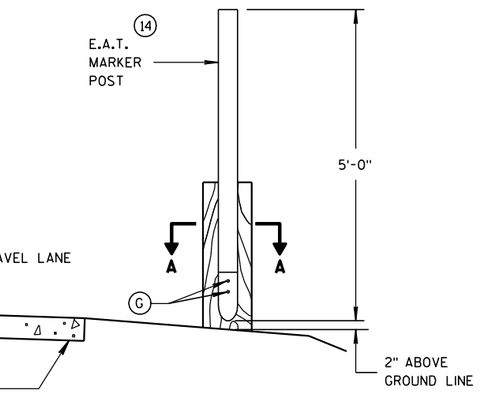

TYPICAL INSTALLATION OF E.A.T. MARKER POST BACKSIDE OF POST NO. 1

(E.A.T. AND RAIL REMOVED FOR CLARITY)

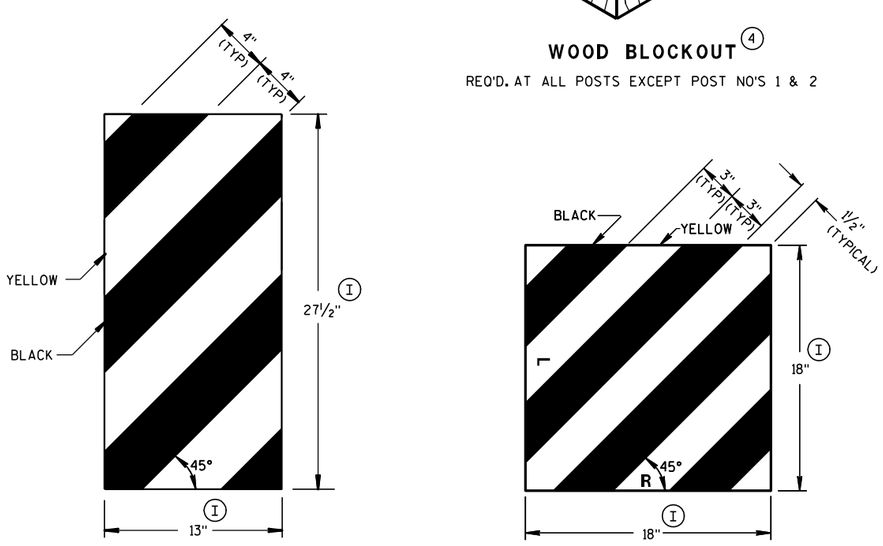

GENERIC REFLECTIVE SHEETING (13) (H)

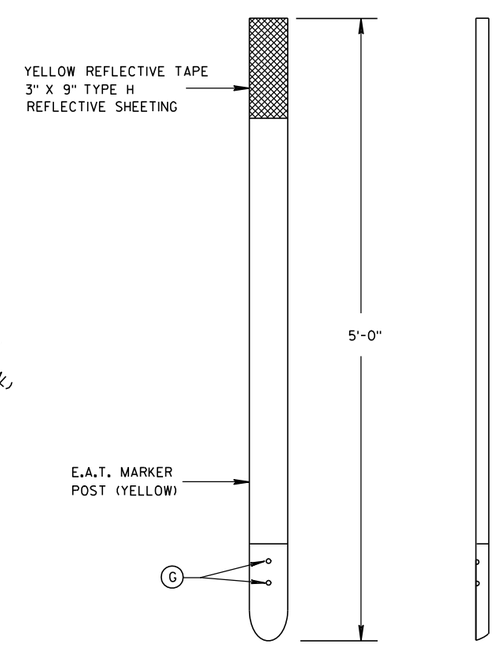

FRONT VIEW

SIDE VIEW

E.A.T. MARKER POST (14)

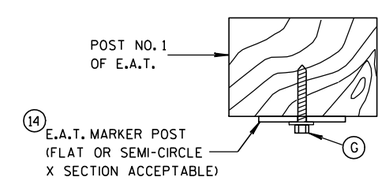

SECTION A-A

MIDWEST GUARDRAIL SYSTEM ENERGY ABSORBING TERMINAL (MGS)

STATE OF WISCONSIN
DEPARTMENT OF TRANSPORTATION

APPROVED
5/23/2011 — DATE
/S/ Jerry H. [illegible] — ROADWAY STANDARDS DEVELOPMENT ENGINEER
FHWA

6

6

S.D.D. 14 B 44-1c

S.D.D. 14 B 44-1c

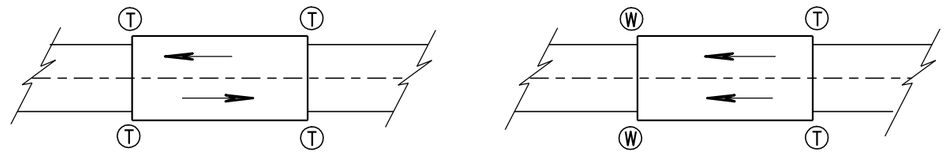

TWO WAY TRAFFIC

ONE WAY TRAFFIC

(T) THRIE BEAM CONNECTION

(W) W-BEAM CONNECTION WHEN REQUIRED

TYPICAL LOCATIONS OF THRIE BEAM AND W-BEAM CONNECTIONS TO BRIDGE

GENERAL NOTES

BOLT THE THRIE BEAM TO ALL POSTS AND BLOCKOUTS. DRILL OR PUNCH BOLT HOLES IN THE BEAM IF THE POST SPACING IS LESS THAN 6'-3.

IF ROCK IS ENCOUNTERED DURING EXCAVATION, SEE STANDARD DETAIL DRAWING 14 B 42.

TRANSITION USES STEEL POSTS ONLY.

SEE STANDARD DETAIL DRAWING 14 B 42 FOR MORE INFORMATION.

(A) BRIDGE RAILING TYPE "W" DOES NOT REQUIRE A TERMINAL CONNECTOR.

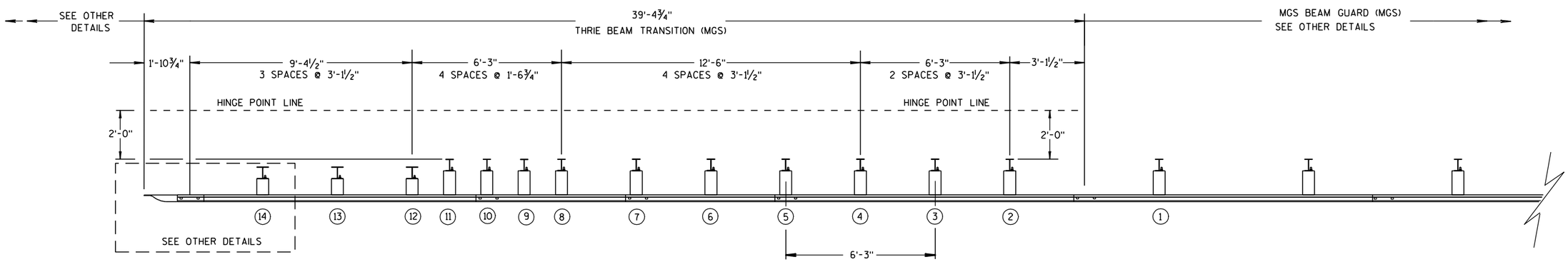

PLAN VIEW

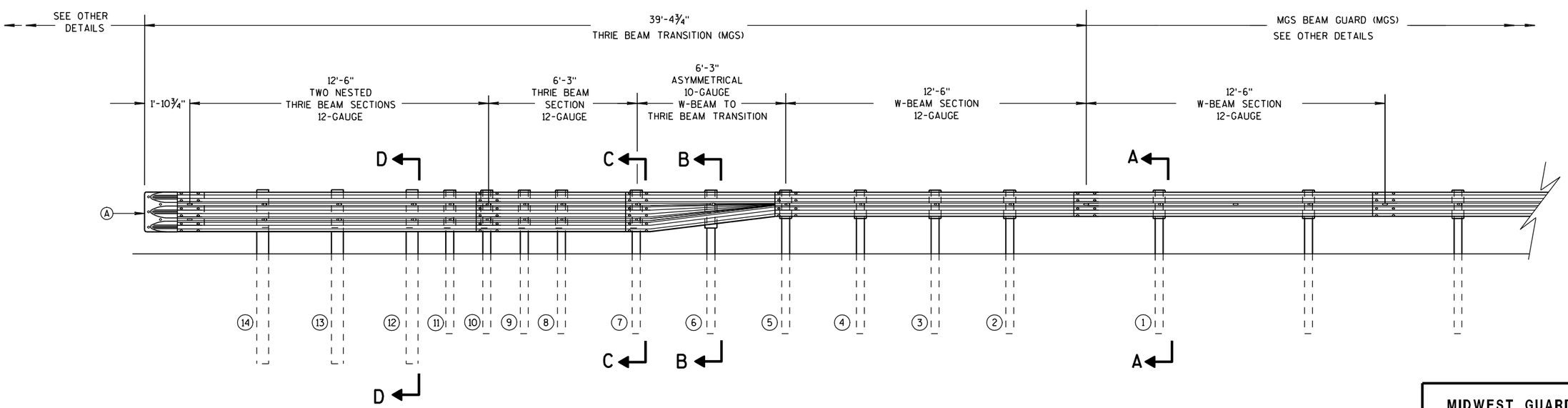

ELEVATION VIEW

MIDWEST GUARDRAIL SYSTEM THRIE BEAM TRANSITION

MIDWEST GUARDRAIL SYSTEM
THRIE BEAM TRANSITION (MGS)

STATE OF WISCONSIN
DEPARTMENT OF TRANSPORTATION

6

S.D.D. 14 B 45-2a

GENERAL NOTES

(B) TOLERANCE FOR TOP OF W-BEAM RAIL IS ± 1".

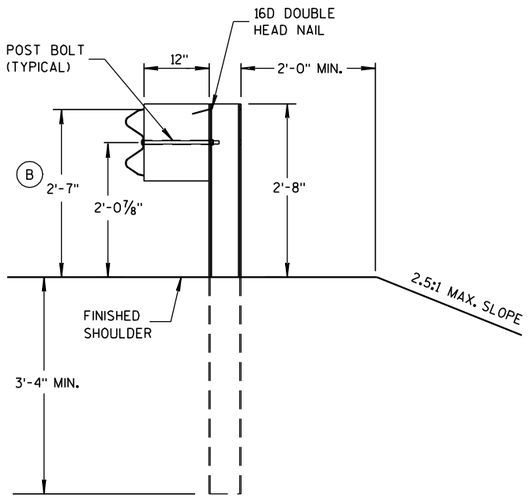

SECTION A-A

POSTS 1-5

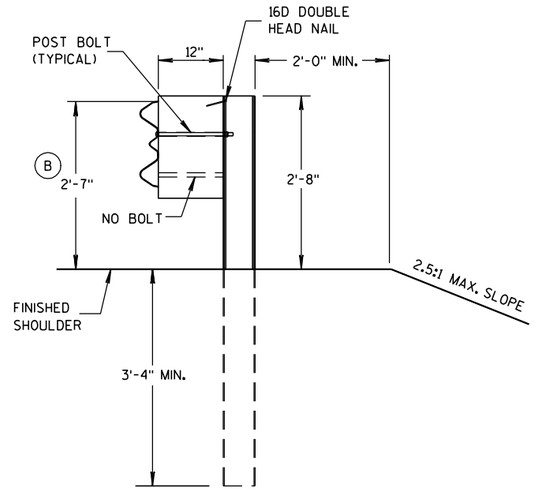

SECTION B-B

POST 6

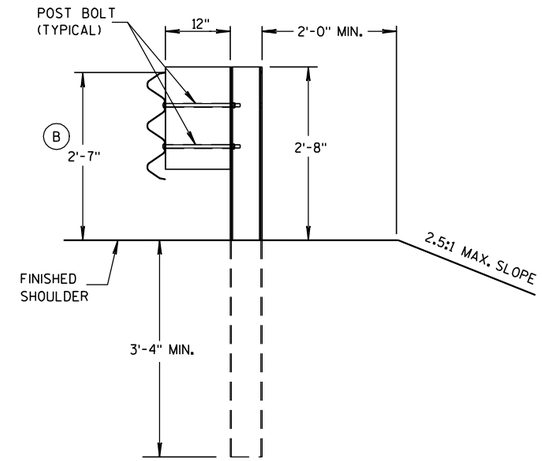

SECTION C-C

POSTS 7-11

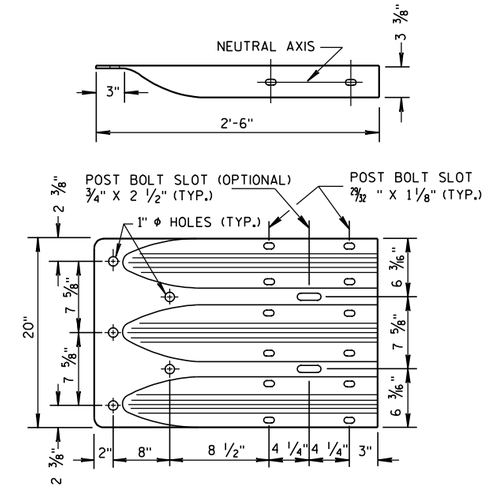

THRIE BEAM TERMINAL CONNECTOR

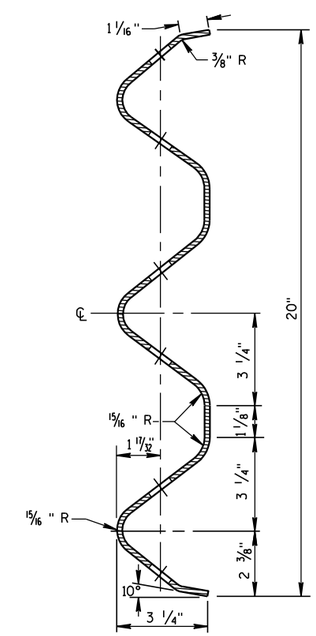

SECTION THRU THRIE BEAM RAIL ELEMENT

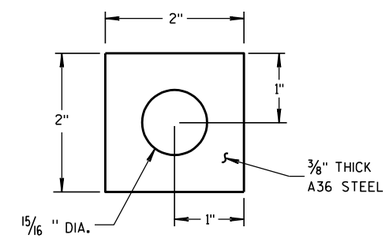

PLATE WASHER DETAIL

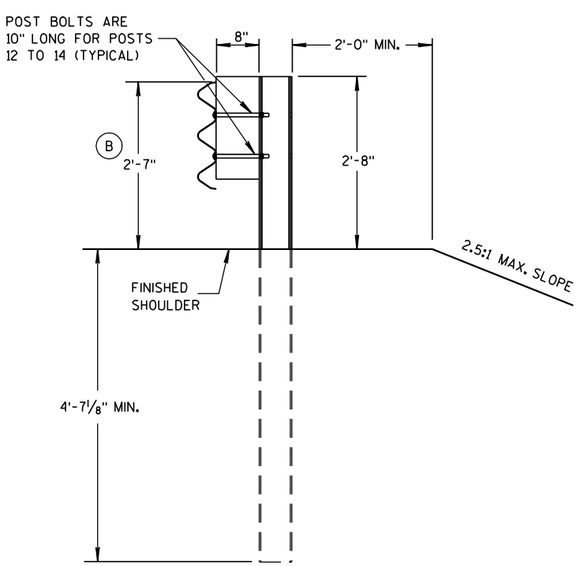

SECTION D-D

POSTS 12-14

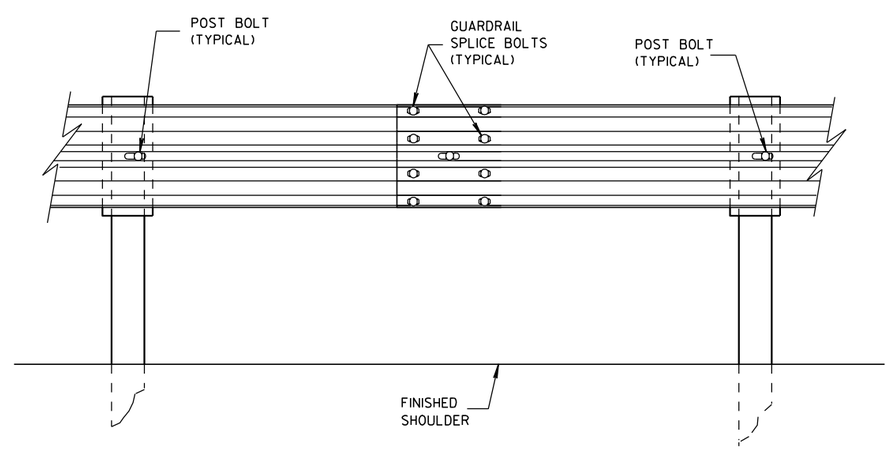

SPLICE DETAIL

MIDWEST GUARDRAIL SYSTEM
THRIE BEAM TRANSITION (MGS)

STATE OF WISCONSIN
DEPARTMENT OF TRANSPORTATION

6

S.D.D. 14 B 45-2b

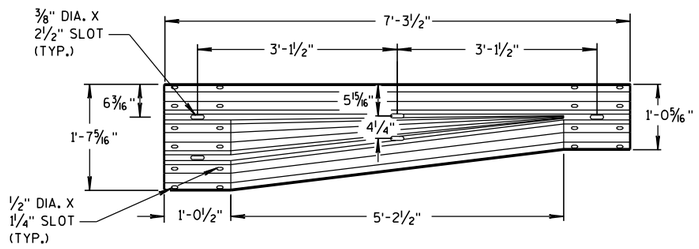

W-BEAM TO THRIE BEAM TRANSITION SECTION

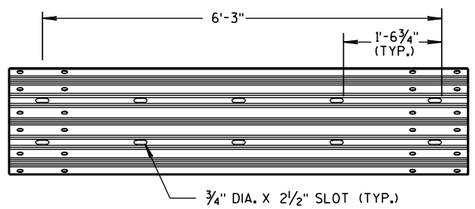

6'-3" THRIE BEAM SECTION

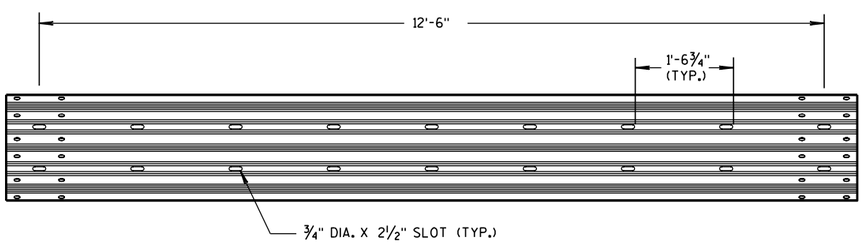

12'-6" THRIE BEAM SECTION

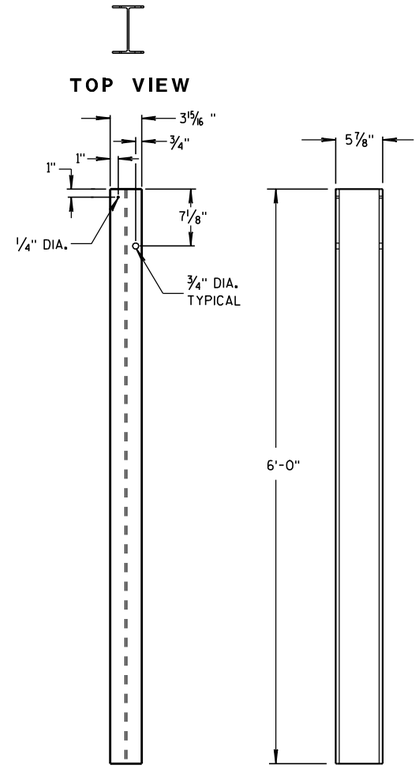

STEEL POSTS 1-5

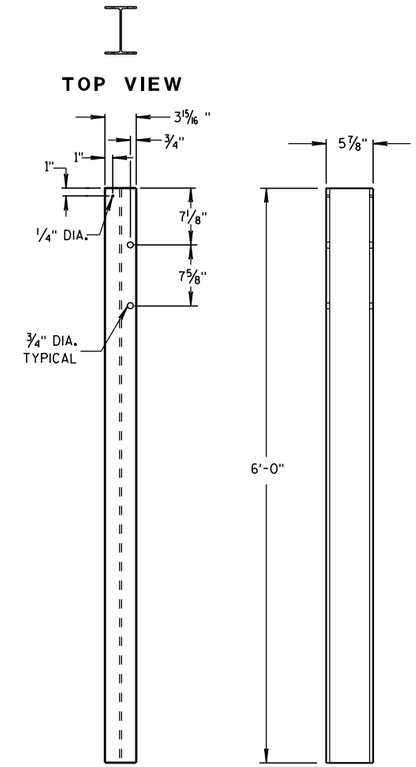

STEEL POSTS 6-11

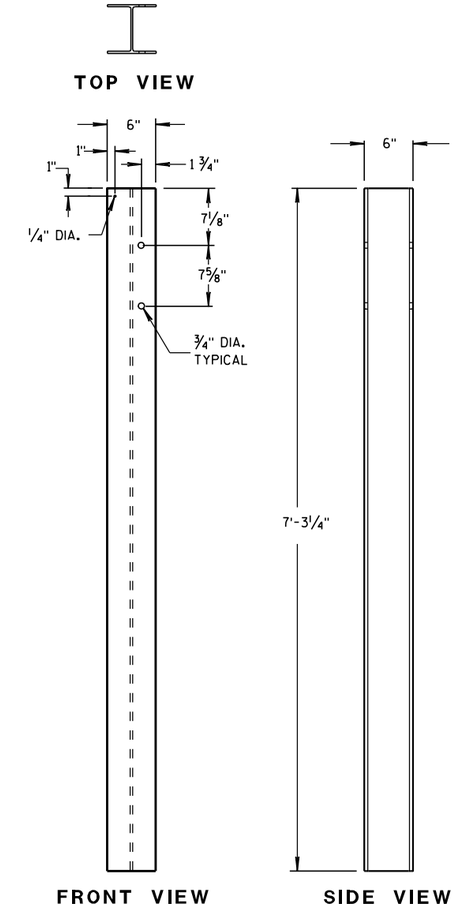

STEEL POSTS 12-14

(1) WOOD BLOCKS MAY BE CONSTRUCTED OUT OF 2 WOOD BLOCKS. SEE ALTERNATE WOOD BLOCK DETAIL.

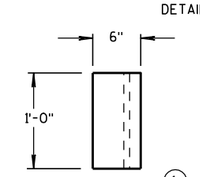

TOP VIEW (1)

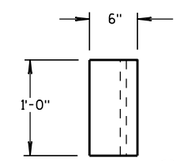

TOP VIEW (1)

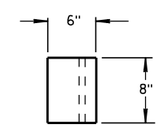

TOP VIEW

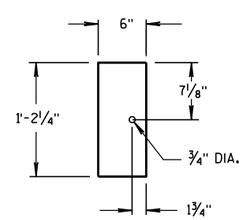

FRONT VIEW

BLOCKOUT POSTS 1-5

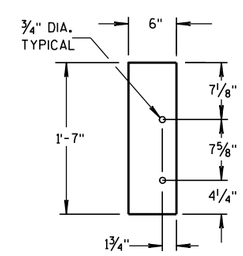

FRONT VIEW

BLOCKOUT POSTS 6-11

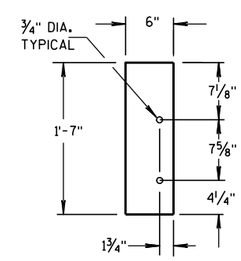

FRONT VIEW

BLOCKOUT POSTS 12-14

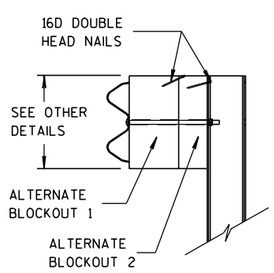

SIDE VIEW

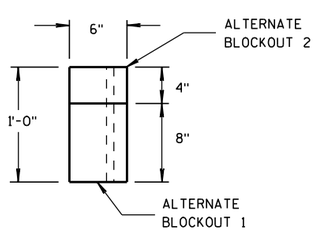

TOP VIEW

ALTERNATE WOOD BLOCKOUT DETAIL

STEEL POST SIZES

POST NUMBER	SECTION TYPE	LENGTH
1	W6x9	72"
2	W6x9	72"
3	W6x9	72"
4	W6x9	72"
5	W6x9	72"
6	W6x9	72"
7	W6x9	72"
8	W6x9	72"
9	W6x9	72"
10	W6x9	72"
11	W6x9	72"
12	W6x15	87 1/8"
13	W6x15	87 1/8"
14	W6x15	87 1/8"

MIDWEST GUARDRAIL SYSTEM
THRIE BEAM TRANSITION (MGS)

STATE OF WISCONSIN
DEPARTMENT OF TRANSPORTATION

6

6

S.D.D. 14 B 45-2c

S.D.D. 14 B 45-2c

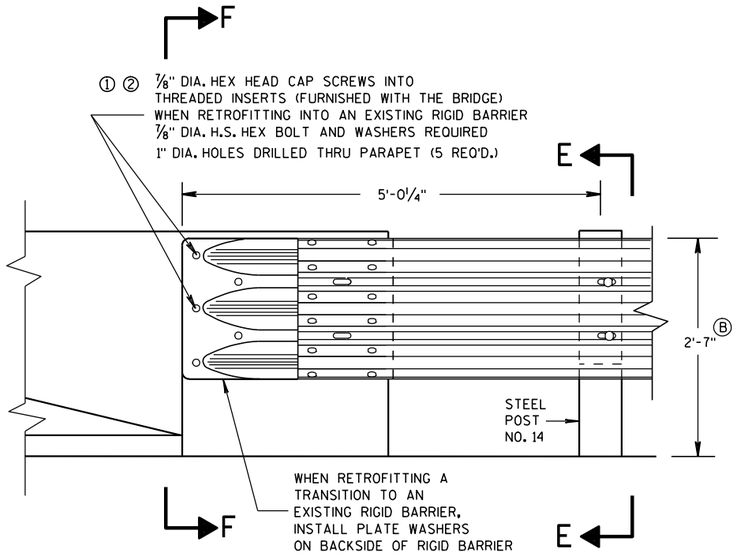

FRONT VIEW

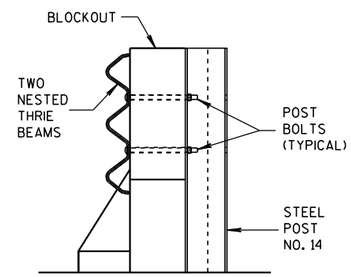

SECTION E-E

THRIE BEAM CONNECTION TO BRIDGE PARAPET WITH SQUARE ENDS

GENERAL NOTES

THESE ARE TYPICAL CONNECTION DETAILS. ADJUST THE POSTION OF CONNECTIONS TO EXISTING BRIDGES TO FIT THE ACTUAL BRIDGE AND SITE DIMENSIONS.

① INCLUDE THE PAYMENT FOR DRILLING BOLT HOLES THROUGH THE PARAPET, AND ALL BOLTS, NUTS AND WASHERS IN THE ITEM "STEEL THRIE BEAMSTRUCTURAL APPROACH".

② BOLTS MAY BE A325 BOLTS OR A449 BOLTS. BOLT LENGTH AND THREADING LENGTH ARE TO ALLOW FOR A TIGHT CONNECTION BETWEEN RIGID BARRIER AND THRIE BEAM CONNECTION PLATE. CONTRACTOR IS TO FIELD VERIFY BOLT LENGTH AND THREAD LENGTH. ONE ROUND WASHER REQUIRED BETWEEN BOLT HEAD AND THRIE BEAM CONNECTOR PLATE. BOLTS THAT EXTEND THROUGH THE PARAPET AND OUT THE BACK FACE REQUIRE A HARDENED ROUND STEEL WASHER THAT IS 2" O.D. X 5/8" THICK AND ONE PLATE WASHER. REPAIR ANY DAMAGED CONCRETE FROM BOLT INSTALLATION.

③ THE RECESS FOR A W-BEAM CONNECTION, WHICH EXISTS ON SOME PARAPETS OF THIS TYPE, SHALL BE FILLED WITH A TREATED TIMBER BLOCKOUT. BLOCKOUT SIZE IS 1'-6" X 2'-0" X 3 1/2".

Ⓑ TOLERANCE FOR TOP OF BEAM IS ± 1".

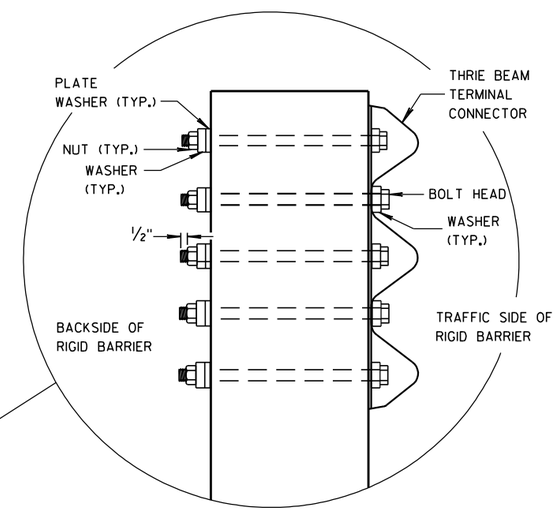

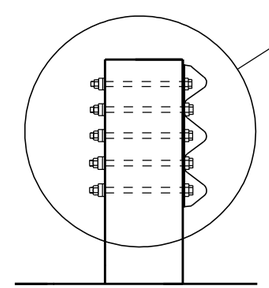

SECTION F-F

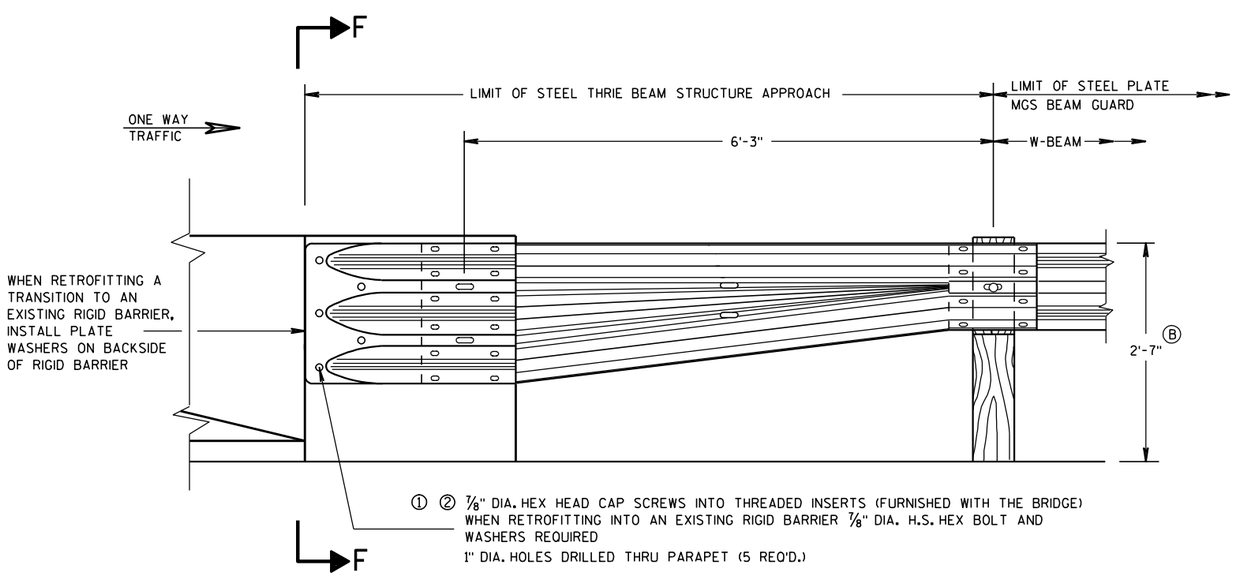

FRONT VIEW

W BEAM TRANSITION AND CONNECTION TO BRIDGE PARAPETS WITH SQUARE ENDS

(USE ONLY ON THE TRAFFIC EXIT END OF ONE WAY BRIDGES)

MIDWEST GUARDRAIL SYSTEM THRIE BEAM TRANSITION (MGS)

STATE OF WISCONSIN
DEPARTMENT OF TRANSPORTATION

APPROVED

2/8/2012	/S/ Jerry H. Zogg
DATE	ROADWAY STANDARDS DEVELOPMENT ENGINEER

FHWA

6

6

S.D.D. 14 B 45-2d

S.D.D. 14 B 45-2d

GENERAL NOTES

THESE ARE TYPICAL CONNECTION DETAILS. ADJUST THE POSTION OF CONNECTIONS TO EXISTING BRIDGES TO FIT THE ACTUAL BRIDGE AND SITE DIMENSIONS.

① INCLUDE THE PAYMENT FOR DRILLING BOLT HOLES THROUGH THE PARAPET, AND ALL BOLTS, NUTS AND WASHERS IN THE ITEM "STEEL THRIE BEAMSTRUCTURAL APPROACH".

② BOLTS MAY BE A325 BOLTS OR A449 BOLTS. BOLT LENGTH AND THREADING LENGTH ARE TO ALLOW FOR A TIGHT CONNECTION BETWEEN RIGID BARRIER AND THRIE BEAM CONNECTION PLATE. CONTRACTOR IS TO FIELD VERIFY BOLT LENGTH AND THREAD LENGTH. ONE ROUND WASHER REQUIRED BETWEEN BOLT HEAD AND THRIE BEAM CONNECTOR PLATE. BOLTS THAT EXTEND THROUGH THE PARAPET AND OUT THE BACK FACE REQUIRE A HARDENED ROUND STEEL WASHER THAT IS 2" O.D. X 5/8" THICK AND ONE PLATE WASHER. REPAIR ANY DAMAGED CONCRETE FROM BOLT INSTALLATION.

③ THE RECESS FOR A W-BEAM CONNECTION, WHICH EXISTS ON SOME PARAPETS OF THIS TYPE, SHALL BE FILLED WITH A TREATED TIMBER BLOCKOUT. BLOCKOUT SIZE IS 1'-6" X 2'-0" X 3 1/2".

④ BOLT, NUT AND WASHERS NOT REQUIRED FOR THIS LOCATION WHEN RETROFITTING AN EXISTING PAPAPET AND THE HOLE IS EITHER ABOVE PARAPET OR WITHIN 4 INCHES OF THE EDGE OF PARAPET.

Ⓑ TOLERANCE FOR TOP OF BEAM IS ± 1".

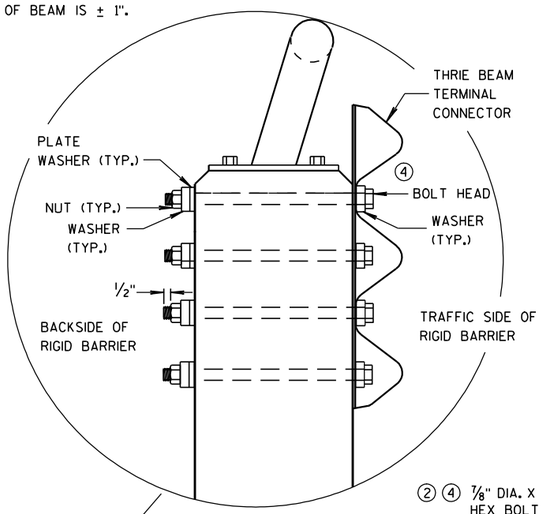

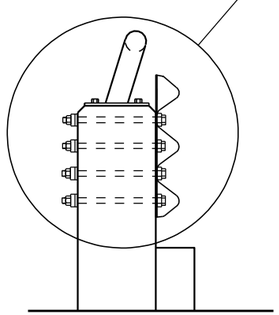

SECTION G-G

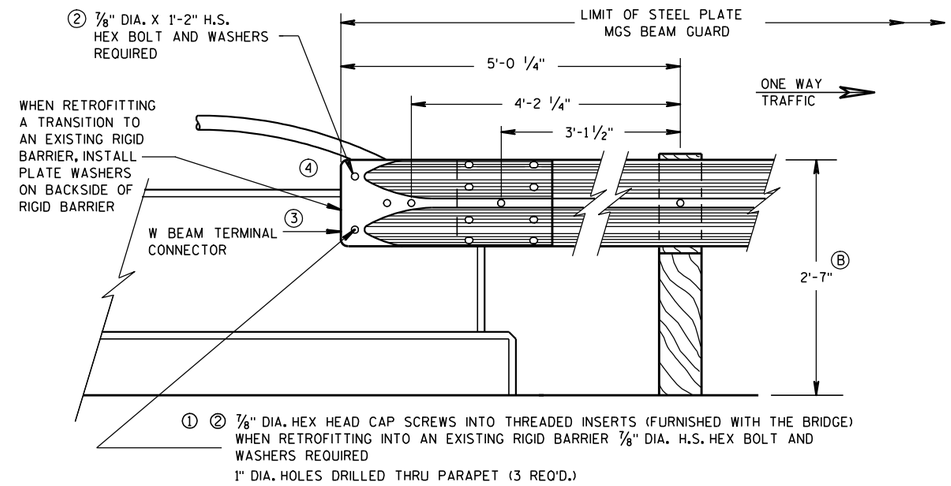

FRONT VIEW

W BEAM CONNECTION TO VERTICAL FACE PARAPET

(USE ONLY ON THE TRAFFIC EXIT END OF ONE WAY BRIDGES)

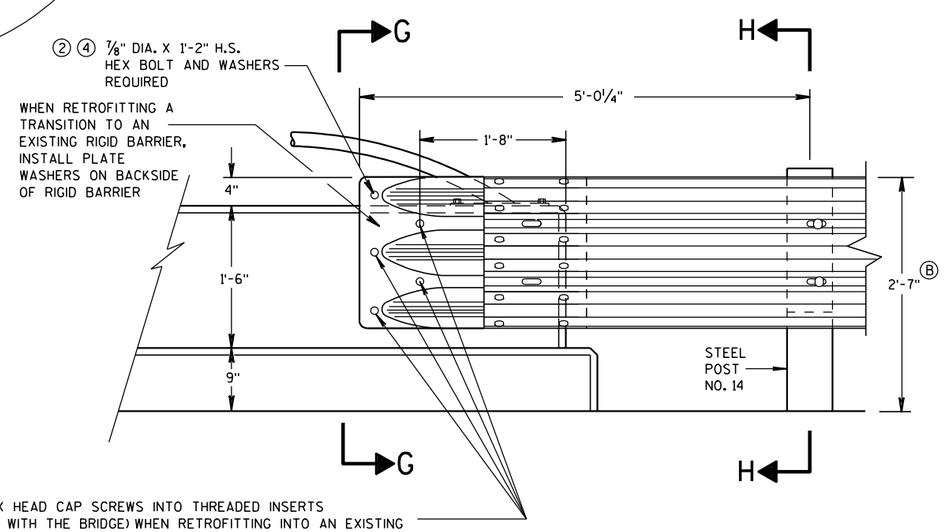

FRONT VIEW

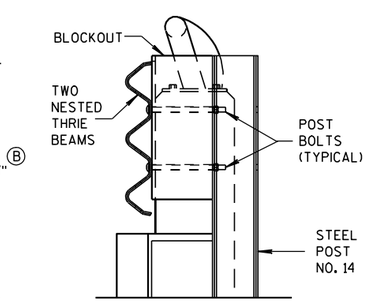

SECTION H-H

THRIE BEAM CONNECTION TO VERTICAL FACED PARAPETS

MIDWEST GUARDRAIL SYSTEM THRIE BEAM TRANSITION (MGS)
STATE OF WISCONSIN DEPARTMENT OF TRANSPORTATION
APPROVED 2-8-2012 DATE — /S/ Jerry H. [illegible] ROADWAY STANDARDS DEVELOPMENT ENGINEER — FHWA

6
S.D.D. 14 B 45-2e

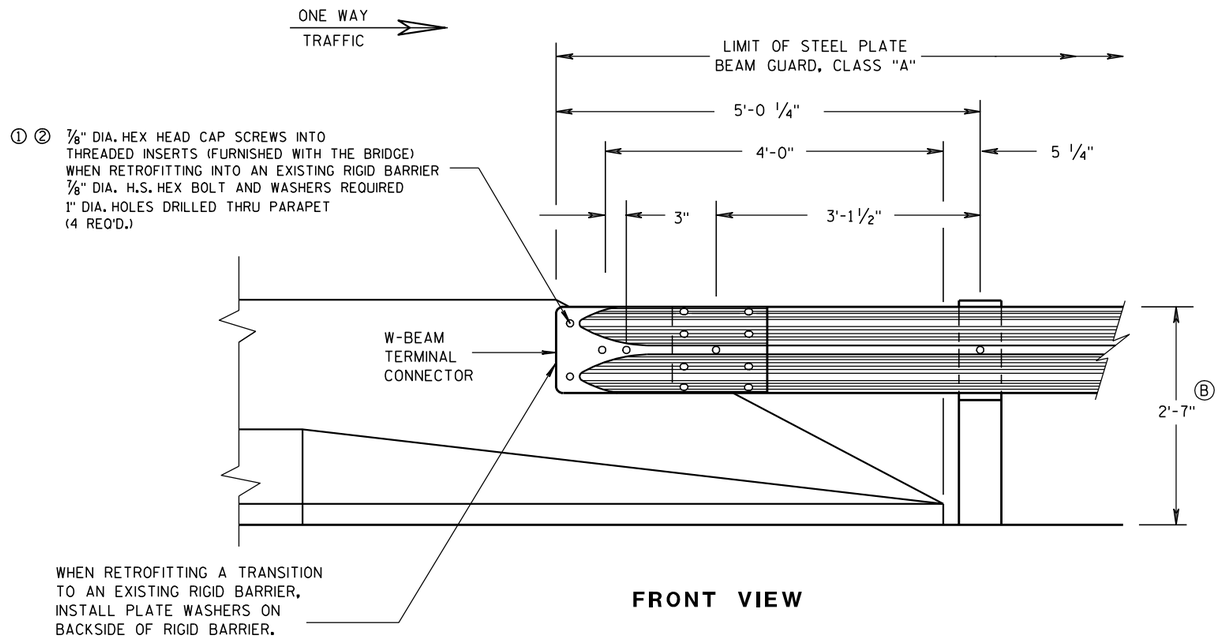

FRONT VIEW

W BEAM CONNECTION TO PARAPETS WITH SLOPED ENDS

(USE ONLY AT TRAFFIC EXIT END OF ONE WAY BRIDGE)

GENERAL NOTES

① INCLUDE THE PAYMENT FOR DRILLING BOLT HOLES THROUGH THE PARAPET, AND ALL BOLTS, NUTS AND WASHERS IN THE ITEM "STEEL THRIE BEAM STRUCTURAL APPROACH".

② BOLTS MAY BE A325 BOLTS OR A449 BOLTS. BOLT LENGTH AND THREADING LENGTH ARE TO ALLOW FOR A TIGHT CONNECTION BETWEEN RIGID BARRIER AND THRIE BEAM CONNECTION PLATE. CONTRACTOR IS TO FIELD VERIFY BOLT LENGTH AND THREAD LENGTH. ONE ROUND WASHER REQUIRED BETWEEN BOLT HEAD AND THRIE BEAM CONNECTOR PLATE. BOLTS THAT EXTEND THROUGH THE PARAPET AND OUT THE BACK FACE REQUIRE A HARDENED ROUND STEEL WASHER THAT IS 2" O.D. X 5/8" THICK AND ONE PLATE WASHER. REPAIR ANY DAMAGED CONCRETE FROM BOLT INSTALLATION.

Ⓑ TOLERANCE FOR TOP OF BEAM IS ± 1".

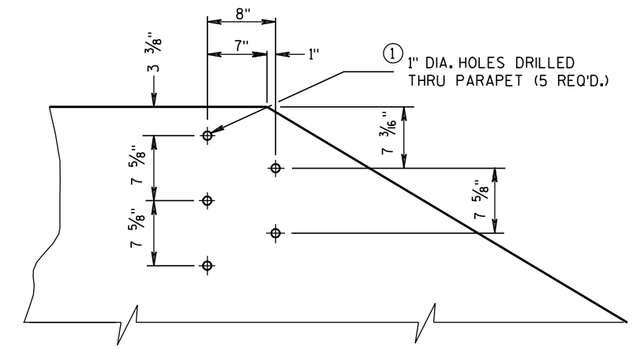

DRILL HOLE LOCATION AND PATTERN FOR THRIE BEAM CONNECTION

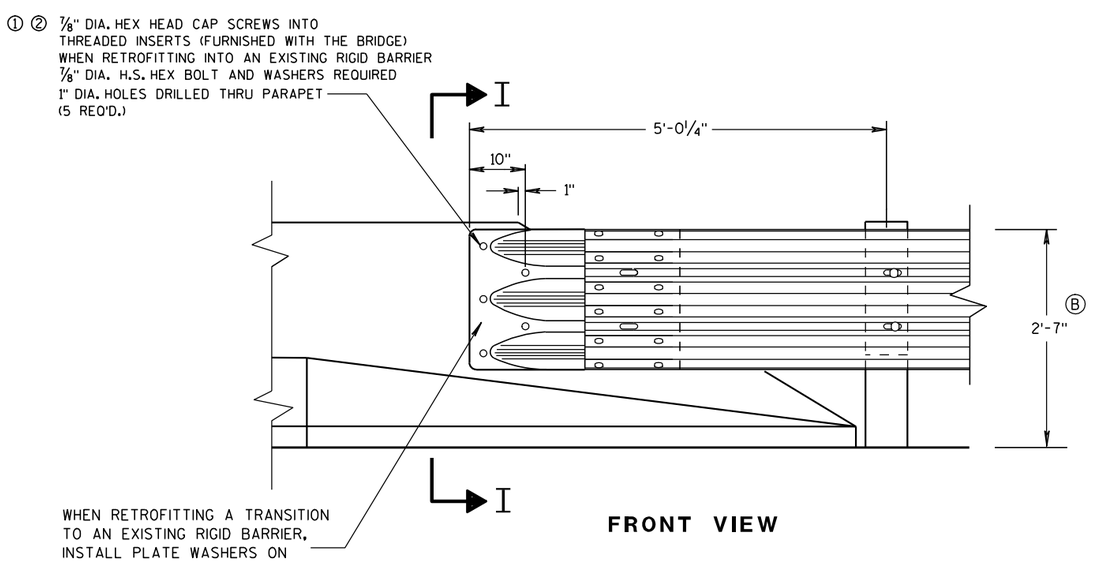

FRONT VIEW

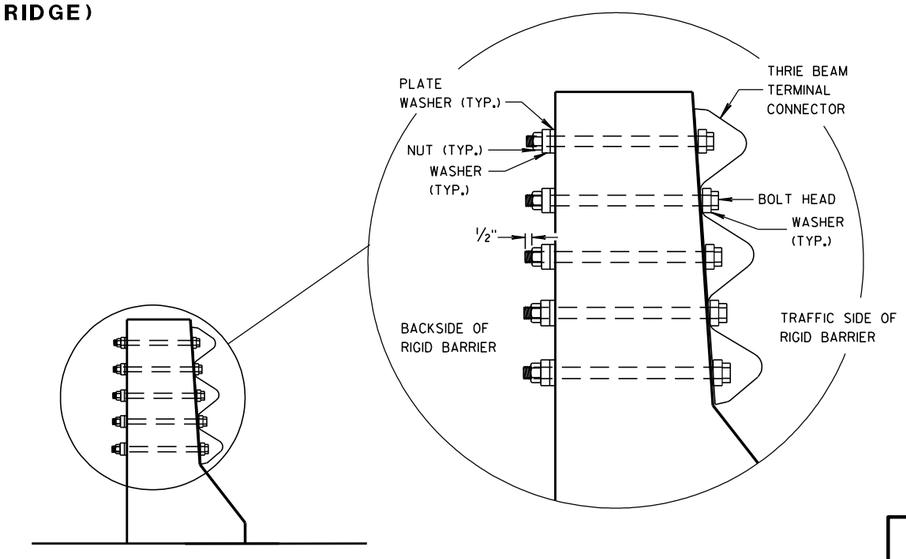

SECTION I-I

THRIE BEAM CONNECTION TO BRIDGE PARAPETS WITH SLOPED ENDS

MIDWEST GUARDRAIL SYSTEM
THRIE BEAM TRANSITION (MGS)

STATE OF WISCONSIN
DEPARTMENT OF TRANSPORTATION

APPROVED

2-8-2012	/S/ Jerry H. Zogg	
DATE	ROADWAY STANDARDS ENGINEER	ENT

FHWA

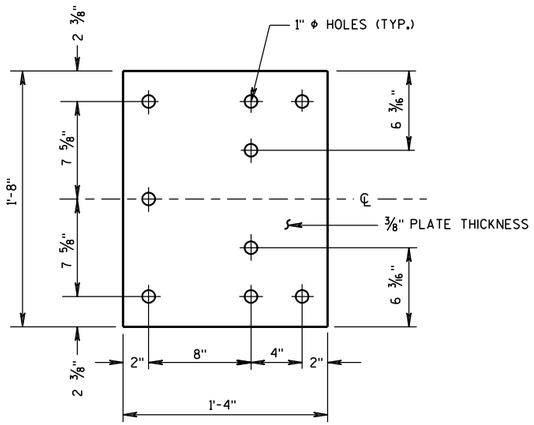

BACK-UP PLATE DETAIL

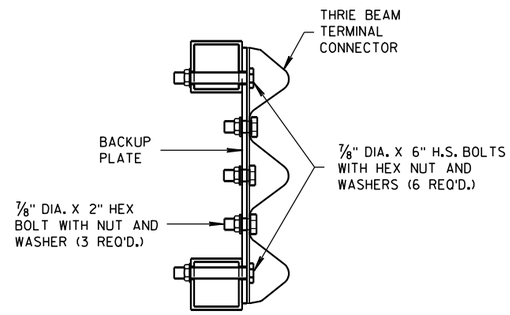

SECTION J-J

GENERAL NOTES

(1) INCLUDE THE PAYMENT FOR DRILLING HOLES IN RAILING IN THE ITEM "STEEL THRIE BEAM STRUCTURE APPROACH".

(B) TOLERANCE FOR TOP OF BEAM IS ± 1".

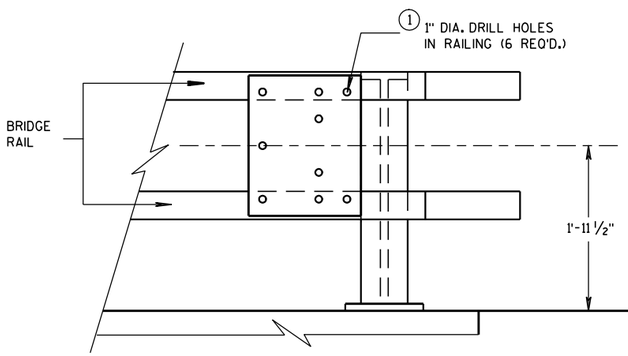

BACK-UP PLATE MOUNTING ONTO BRIDGE RAILING

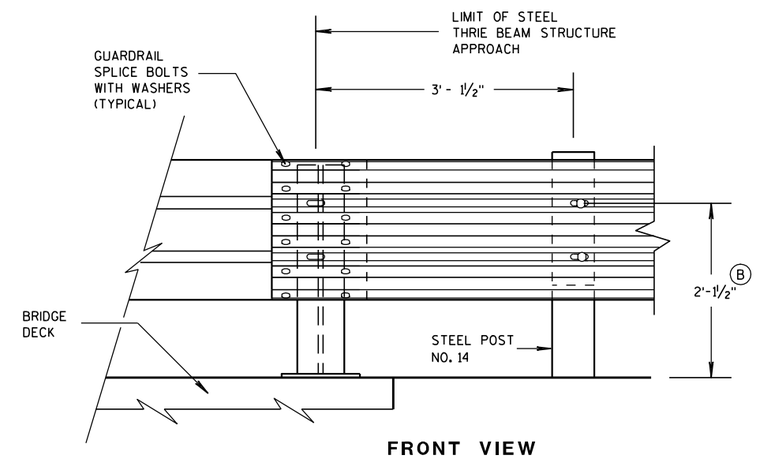

FRONT VIEW

THRIE BEAM CONNECTION TO STEEL RAILING TYPE "W"

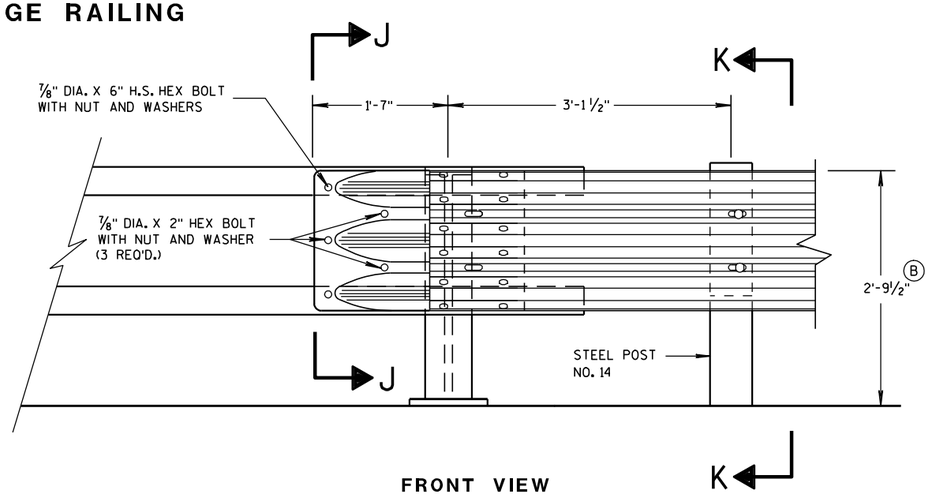

FRONT VIEW

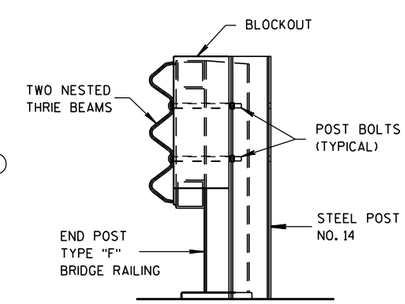

SECTION K-K

THRIE BEAM CONNECTION TO TUBULAR RAILING TYPE "F"

MIDWEST GUARDRAIL SYSTEM
THRIE BEAM TRANSITION (MGS)

STATE OF WISCONSIN
DEPARTMENT OF TRANSPORTATION

APPROVED
2-8-2012 /S/ Jerry H. Zogg
DATE ROADWAY STANDARDS DEVELOPMENT ENGINEER
FHWA

6

6

S.D.D. 14 B 45-2g

S.D.D. 14 B 45-2g

GENERAL NOTES

(B) TOLERANCE FOR TOP OF W-BEAM RAIL IS ± 1".

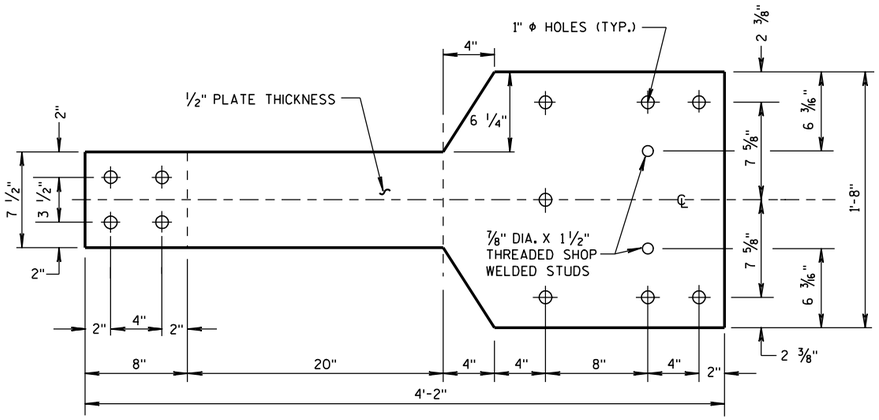

FRONT VIEW

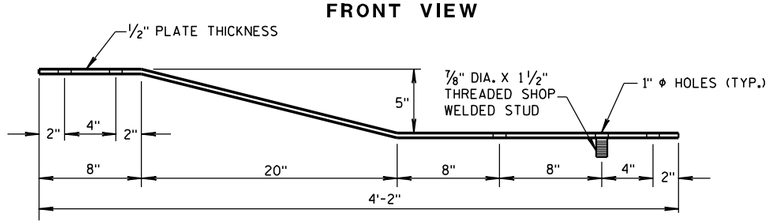

PLAN VIEW

BACK-UP PLATE DETAIL, TYPE "M"

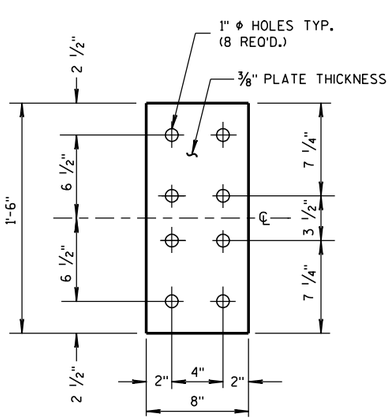

FRONT VIEW

ANCHOR PLATE DETAIL, TYPE "M"

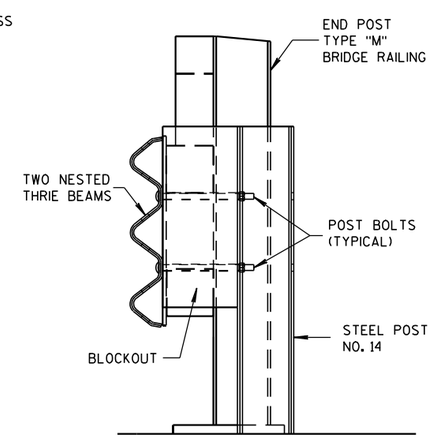

SECTION M-M

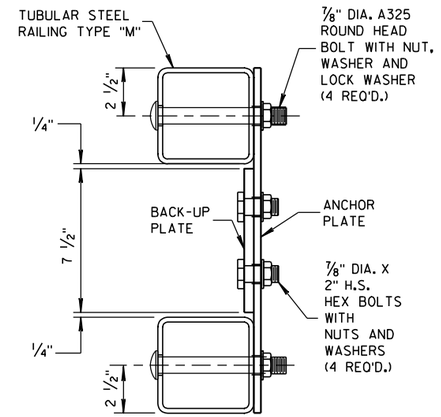

SECTION L-L

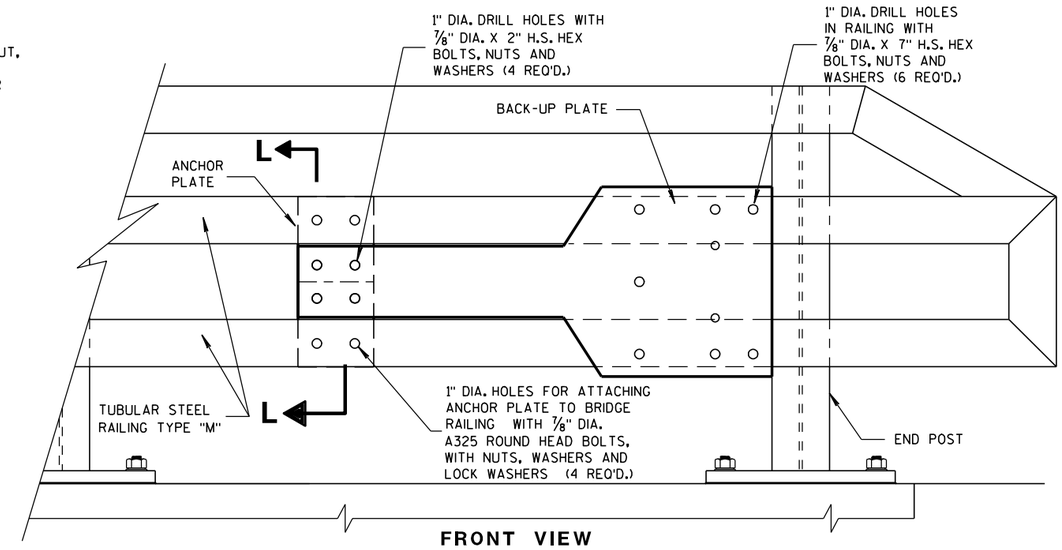

FRONT VIEW

ANCHOR AND BACK-UP PLATE MOUNTING TO BRIDGE RAILING, TYPE "M"

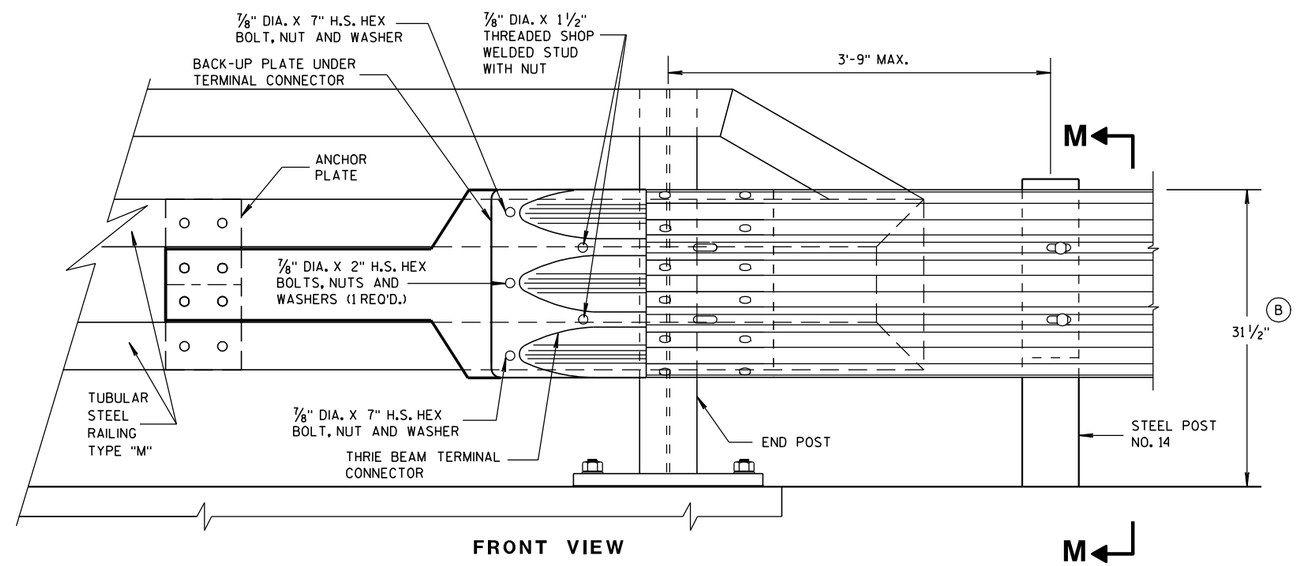

FRONT VIEW

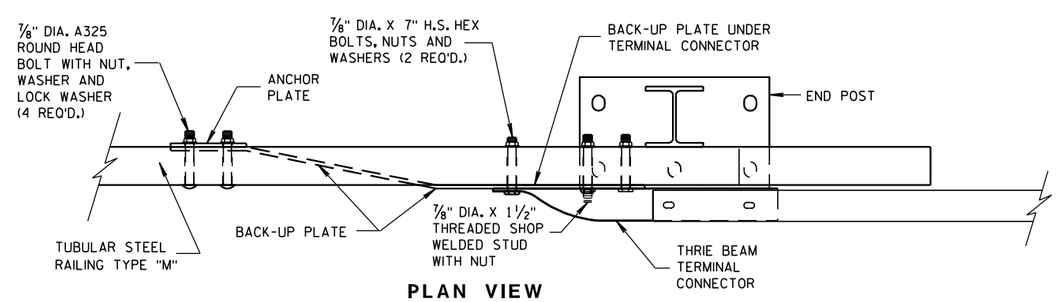

PLAN VIEW

THRIE BEAM CONNECTION TO TUBULAR RAILING, TYPE "M"

MIDWEST GUARDRAIL SYSTEM THRIE BEAM TRANSITION (MGS)

STATE OF WISCONSIN
DEPARTMENT OF TRANSPORTATION

APPROVED

2-8-2012	/S/ Jerry H. [illegible]	
DATE	ROADWAY STANDARDS ENGINEER	ENT

FHWA

GENERAL NOTES

COVER PLATE PANELS ARE 3/16" THICK.

ALL STIFFENERS ARE 1/4" THICK.

CONNECTOR PLATE SHALL BE FABRICATED FROM ASTM GRADE A36 STEEL AND GALVANIZED.

FOR GALVANIZED REQUIREMENTS, SEE SECTION 614 OF THE STANDARD SPECIFICATIONS.

ALL HOLE DIAMETERS SHALL BE 1".

FOR OPPOSITE SIDE INSTALLATION MIRROR DRAWINGS.

(1) STIFFENERS LOCATED AT THE OUTSIDE EDGES OF THE COVER PLATES SHALL BE WELDED AS FOLLOWS:
SINGLE BEVEL GROOVE WELD ON EXTERNAL SIDES AND 3/16" FILLET WELD BY 1" LONG SPACED AT 2" ON INTERNAL SIDES.

(2) STIFFENERS LOCATED ON THE INSIDE OF THE COVER PLATE SHALL BE WELDED AS FOLLOWS:
3/16" FILLET WELD BY 1" LONG SPACED AT 2".

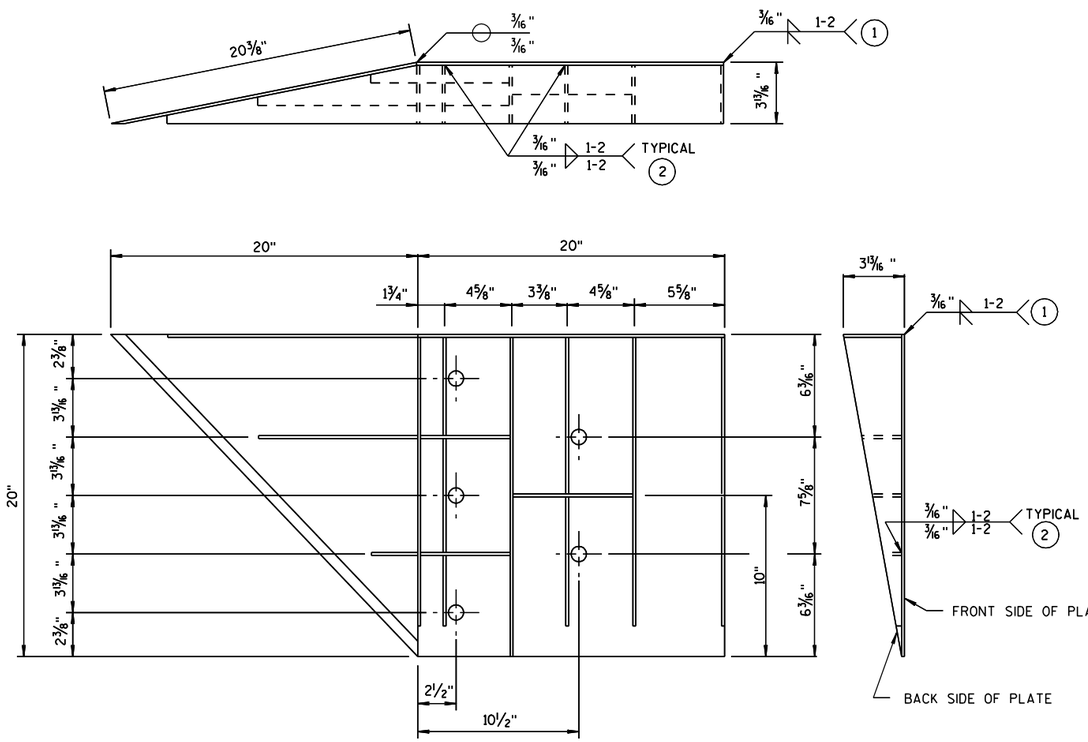

WELDING INSTRUCTION

(VIEWED FROM BACK SIDE OF PLATE)

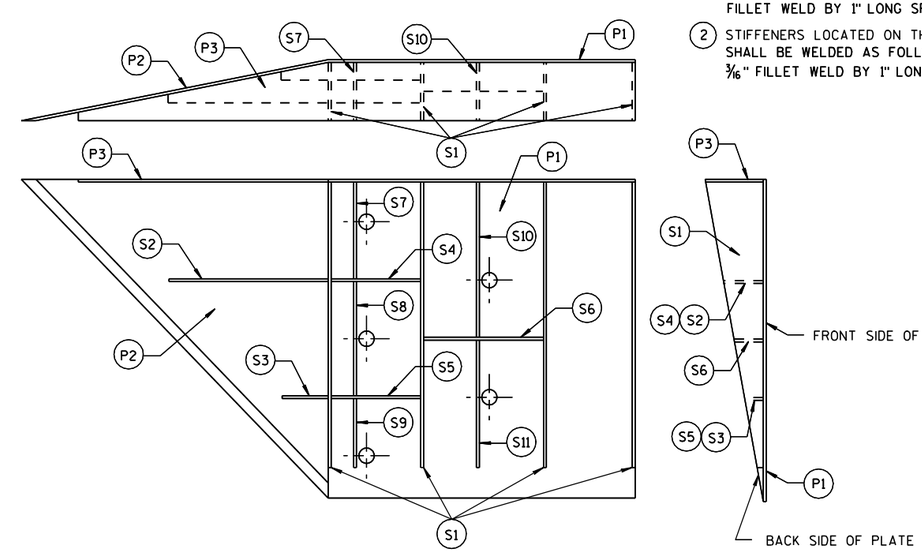

PLATE AND STIFFENER IDENTIFICATION

(VIEWED FROM BACK SIDE OF PLATE)

CONNECTOR PLATE DIMENSION (PER ASSEMBLY)

PLATE	QUANTITY	SHAPE	SIZE (A x B x C x D)	THICKNESS
P1	1		20" x 20"	3/16"
P2	1		20" x 20" x 28 9/16"	3/16"
P3	1		39" x 3 5/8" x 20" x 19 5/16"	3/16"
S1	4		18 7/16" x 3 5/8" x 18 3/4"	1/4"
S2	1		10 1/4" x 2 7/16" x 10 3/8" x 1/2"	1/4"
S3	1		3" x 1 1/16" x 3 1/8" x 1/2"	1/4"
S4	1		6 1/8" x 2 7/16"	1/4"
S5	1		6 1/8" x 1 1/16"	1/4"
S6	1		7 3/4" x 1 3/4"	1/4"
S7	1		2 9/16" x 6" x 3 5/8" x 5 7/8"	1/4"
S8	1		1 5/32" x 7 1/2" x 2 1/2" x 7 3/8"	1/4"
S9	1		6 1/16" x 6 3/16" x 1 3/32"	1/4"
S10	1		1 7/8" x 9 7/8" x 3 5/8" x 9 11/16"	1/4"
S11	1		8 1/2" x 8 3/4" x 1 13/16"	1/4"

SINGLE SLOPE CONNECTION PLATE

MIDWEST GUARDRAIL SYSTEM
THRIE BEAM TRANSITION (MGS)

STATE OF WISCONSIN
DEPARTMENT OF TRANSPORTATION

APPROVED

2-8-2012 — DATE

/S/ Jerry H. [illegible] — ROADWAY STANDARDS DEVELOPMENT ENGINEER

FHWA

GENERAL NOTES

CONNECTION PLATE INCIDENTAL TO STEEL THRIE BEAM TRANSITION.

(1) BOLTS MAY BE A325 BOLTS OR A449 BOLTS. BOLT LENGTH AND THREADING LENGTH ARE TO ALLOW FOR A TIGHT CONNECTION BETWEEN RIGID BARRIER AND THRIE BEAM CONNECTION PLATE. CONTRACTOR IS TO FIELD VERIFY BOLT LENGTH AND THREAD LENGTH. ONE ROUND WASHER REQUIRED BETWEEN BOLT HEAD AND THRIE BEAM CONNECTOR PLATE. BOLTS THAT EXTEND THROUGH THE PARAPET AND OUT THE BACK FACE REQUIRE A HARDENED ROUND STEEL WASHER THAT IS 2" O.D. X 5/8" THICK AND ONE PLATE WASHER. REPAIR ANY DAMAGED CONCRETE FROM BOLT INSTALLATION.

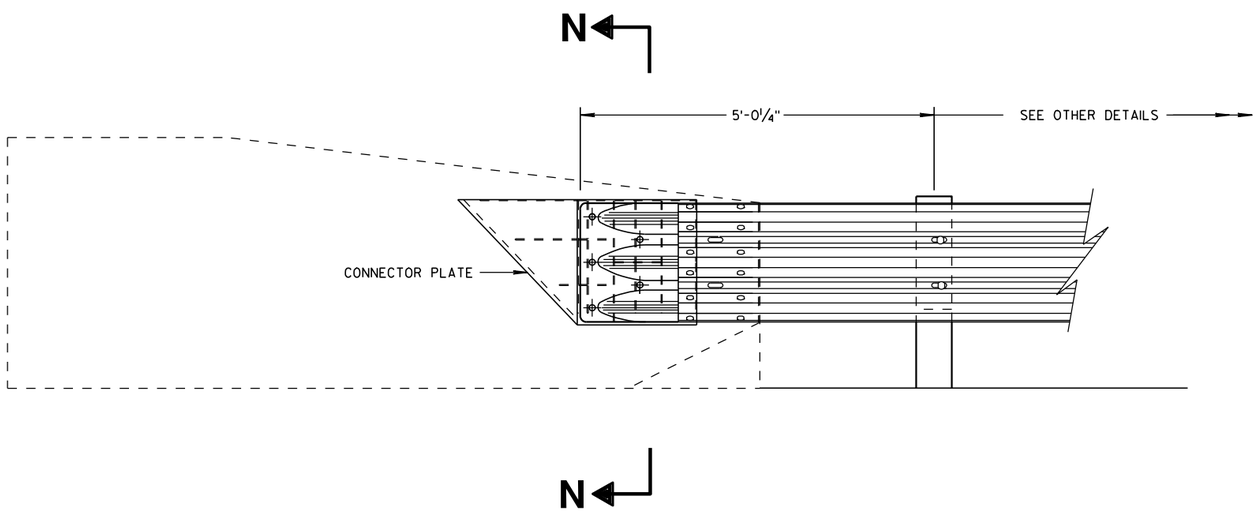

THRIE BEAM CONNECTION TO SINGLE SLOPE BARRIER

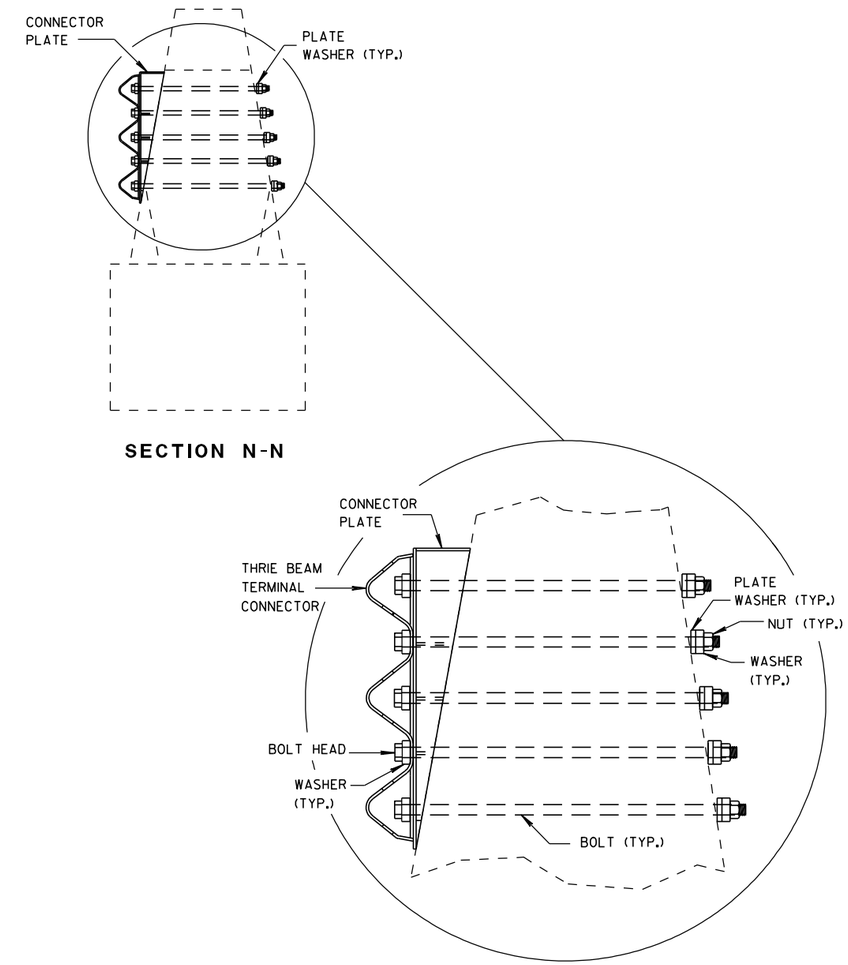

SECTION N-N

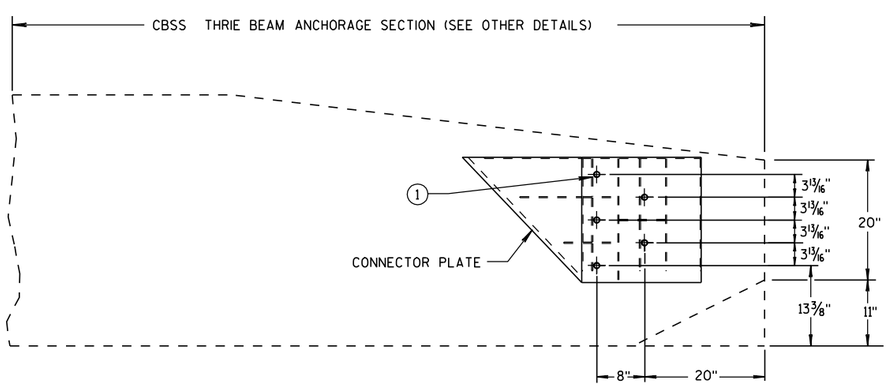

SINGLE SLOPE CONNECTION PLATE PLACEMENT

6

6

S.D.D. 14 B 45-2j

S.D.D. 14 B 45-2j

MIDWEST GUARDRAIL SYSTEM
THRIE BEAM TRANSITION (MGS)

STATE OF WISCONSIN
DEPARTMENT OF TRANSPORTATION

APPROVED

2-8-2012 — DATE

/S/ Jerry H. [illegible] — ROADWAY STANDARDS DEVELOPMENT ENGINEER

FHWA

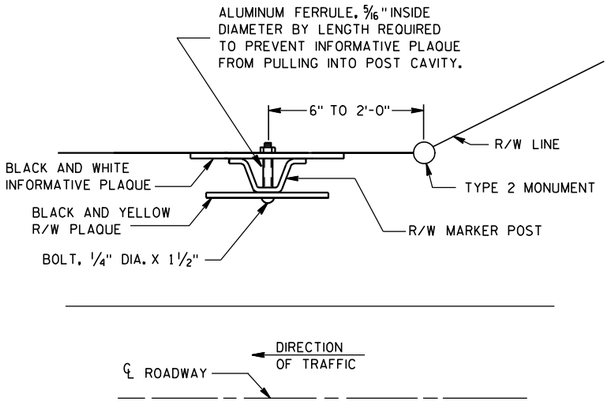

PLAN VIEW

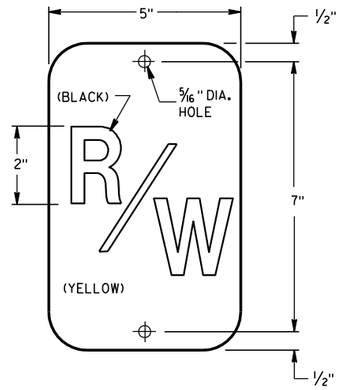

R/W PLAQUE

THE RIGHT-OF-WAY PLAQUE AND INFORMATIVE PLAQUE WILL BE FURNISHED BY THE WISCONSIN DEPARTMENT OF TRANSPORTATION.

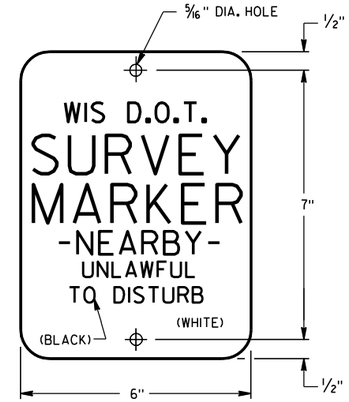

INFORMATIVE PLAQUE

GENERAL NOTES

DETAILS OF CONSTRUCTION NOT SHOWN ON THIS DRAWING SHALL CONFORM TO THE PERTINENT REQUIREMENTS OF THE STANDARD SPECIFICATIONS AND THE APPLICABLE SPECIAL PROVISIONS.

A STEEL MARKER POST FOR RIGHT-OF-WAY SHALL BE PLACED IN THE RIGHT-OF-WAY, WITH THE BACK OF THE POST ON THE LONGER RIGHT-OF-WAY TANGENT, 6 INCHES TO 24 INCHES FROM EACH TYPE 2 MONUMENT TO SERVE AS A GUARD POST, AND AT OTHER LOCATIONS AS SHOWN ON THE PLANS OR AS DIRECTED BY THE ENGINEER.

THE "R/W" PLAQUE SHALL FACE THE ROADWAY AND THE INFORMATIVE PLAQUE SHALL FACE AWAY FROM THE ROADWAY. R/W AND INFORMATIVE PLAQUES WILL BE FURNISHED BY THE DEPARTMENT OF TRANSPORTATION.

STEEL MARKER POSTS SHALL MEET THE MINIMUM MATERIAL REQUIREMENTS FOR STEEL DELINEATOR POSTS; EXCEPT POSTS PAINTED WITH FEDERAL YELLOW ENAMEL NEED NOT BE ZINC COATED.

(1) IN AREAS OF SOLID ROCK, DRILL A BORE HOLE 2" GREATER THAN THE WIDEST DIMENSION OF THE POST CROSS SECTION INTO THE ROCK TO A MINIMUM DEPTH OF 12 INCHES. CUT OR SPLICE THE POST SO THAT A MINIMUM LENGTH OF 3' 10" PROTRUDES ABOVE THE GROUND. BLOW OUT THE BORE HOLE IN THE ROCK USING COMPRESSED AIR.

FILL THE BORE HOLE WITH CEMENT GROUT, OR EQUIVALENT. DEPENDING ON THE STABILITY OF THE ROCK.

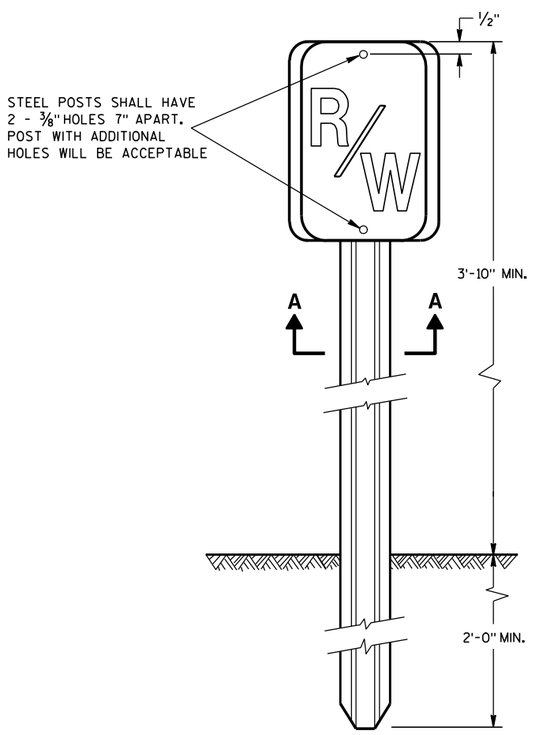

FRONT VIEW
STEEL MARKER POST

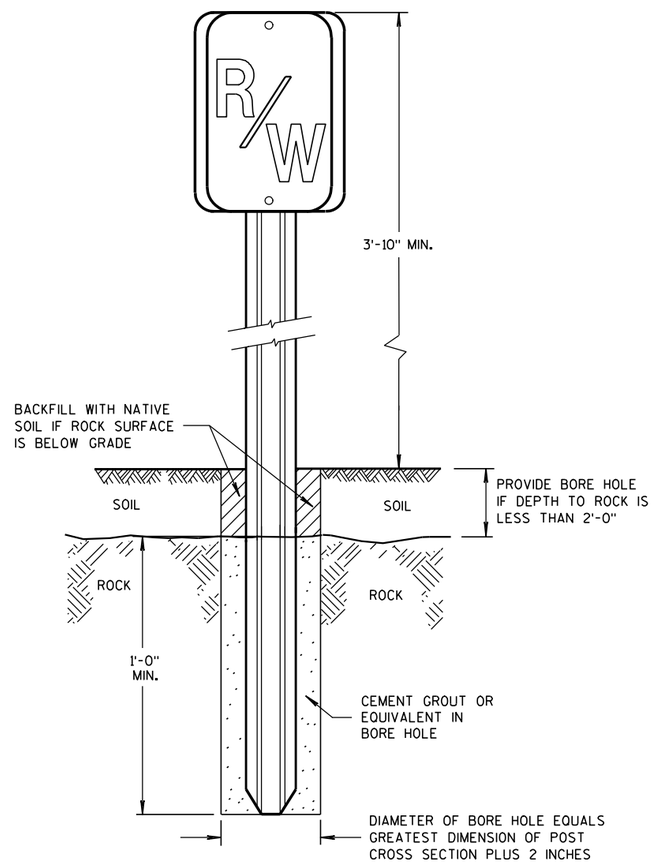

FRONT VIEW
ROCK INSTALLATION (1)

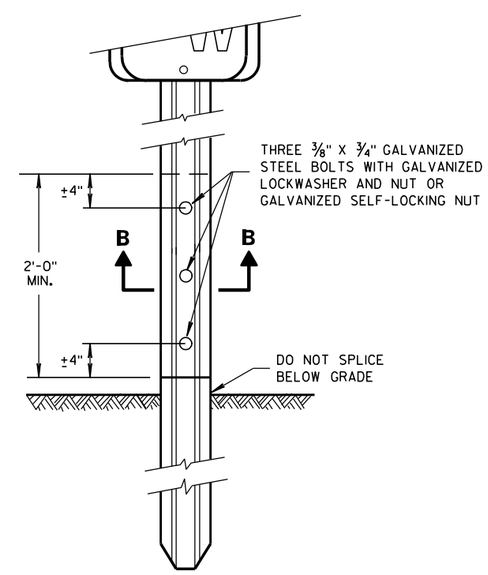

FRONT VIEW
SPLICE DETAIL

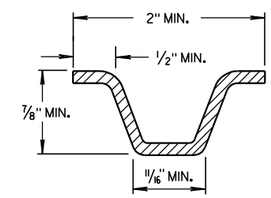

MIN. WEIGHT 1.12 LB./FT.

SECTION A-A

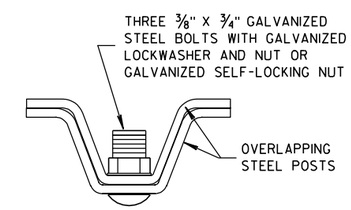

SECTION B-B

MARKER POST FOR RIGHT-OF-WAY

STATE OF WISCONSIN
DEPARTMENT OF TRANSPORTATION

APPROVED
4/27/09 — DATE
/S/ Ray Kumapayi — CHIEF SURVEYING AND MAPPING ENGINEER
FHWA

6

6

S.D.D. 15 A 1-11

S.D.D. 15 A 1-11

GENERAL NOTES

DETAILS OF CONSTRUCTION, MATERIALS AND WORKMANSHIP NOT SHOWN ON THIS DRAWING SHALL CONFORM TO THE PERTINENT REQUIREMENTS OF THE STANDARD SPECIFICATIONS AND THE APPLICABLE SPECIAL PROVISIONS.

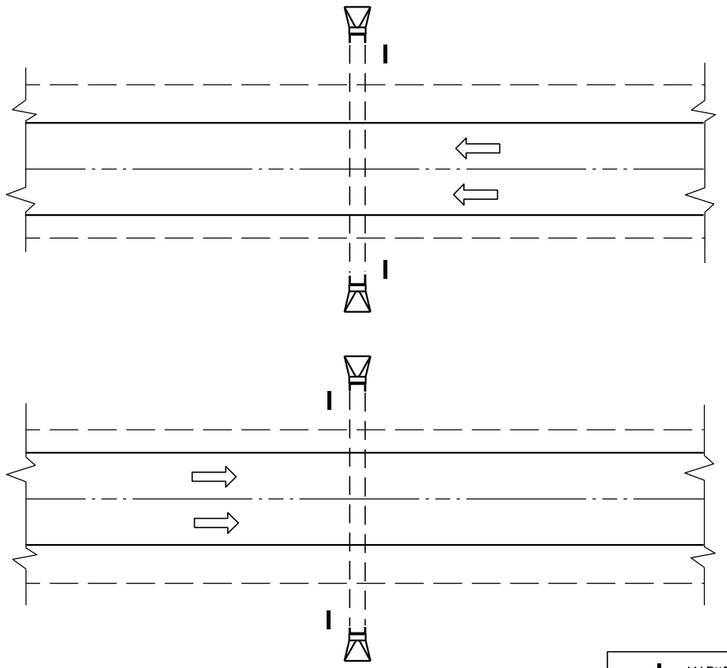

PLAN VIEW

DIVIDED HIGHWAY

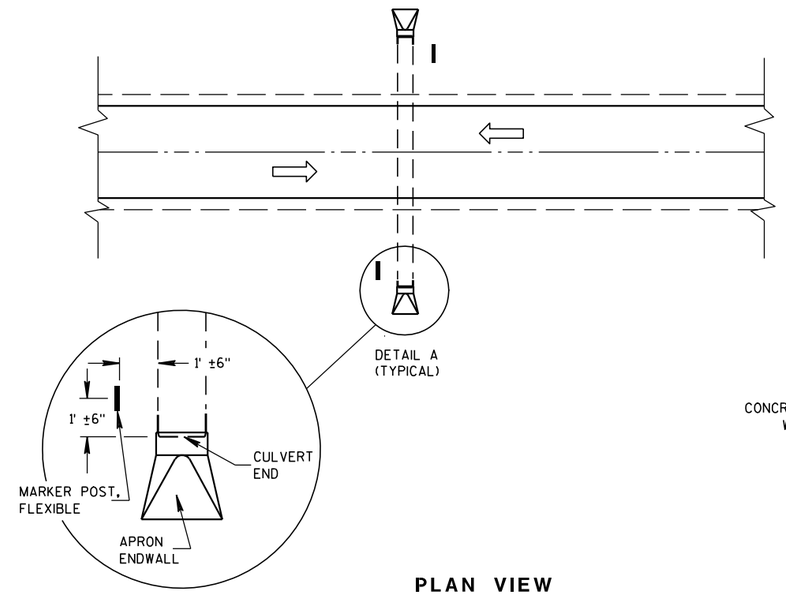

DETAIL A
(TYPICAL)

PLAN VIEW

UNDIVIDED HIGHWAY

I MARKER POST, FLEXIBLE

DIRECTION OF TRAFFIC FLOW

FLEXIBLE MARKER POST LOCATION

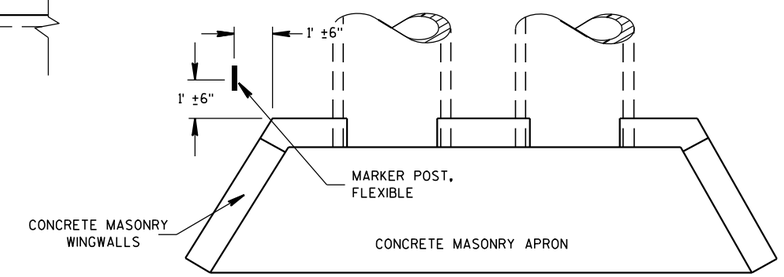

PLAN VIEW

CONCRETE MASONRY ENDWALLS FOR CULVERT PIPE AND PIPE ARCH

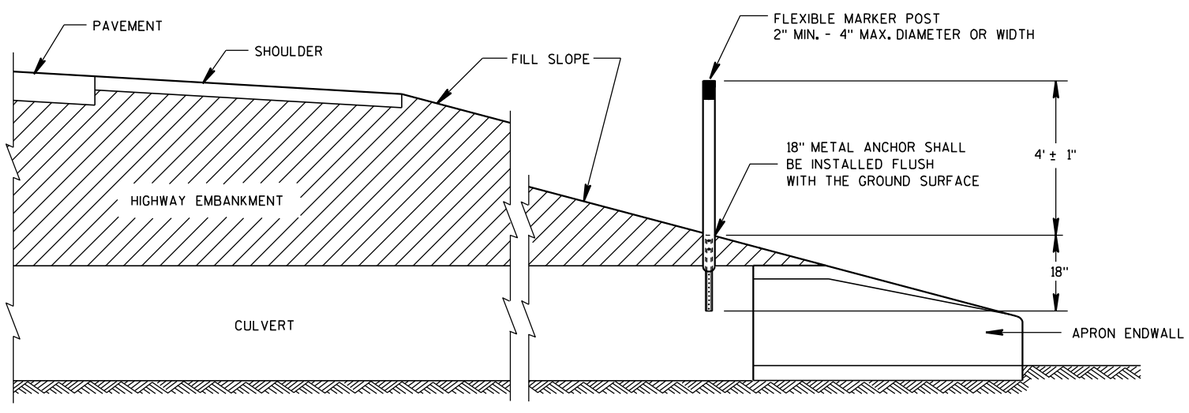

CROSS SECTION

FLEXIBLE MARKER POST

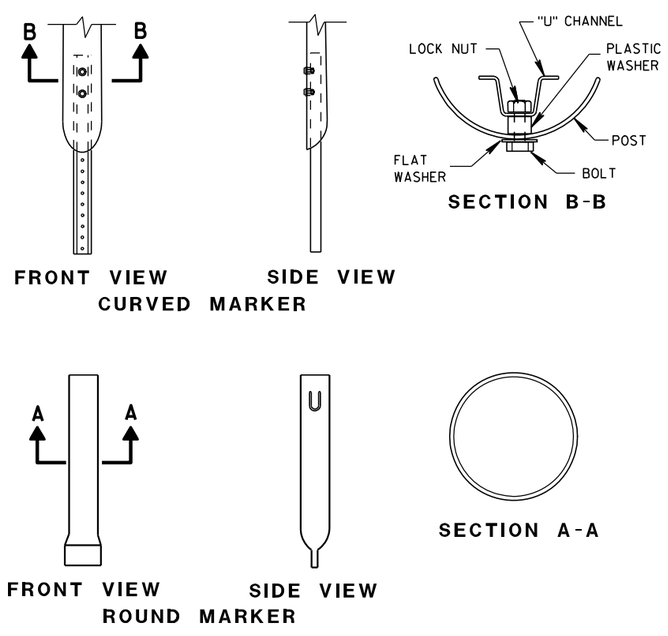

FRONT VIEW SIDE VIEW
CURVED MARKER

SECTION B-B

FRONT VIEW SIDE VIEW
ROUND MARKER

SECTION A-A

FLEXIBLE MARKER POST ANCHORS

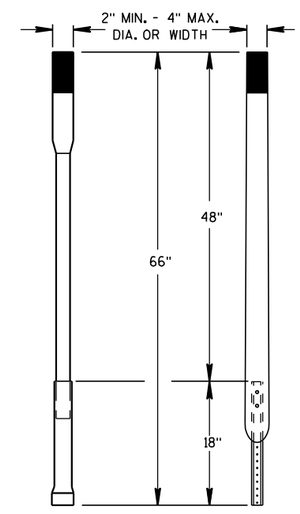

ALTERNATE 1 ALTERNATE 2

FLEXIBLE MARKER POST

MARKER POST, FLEXIBLE, FOR CULVERT END

STATE OF WISCONSIN
DEPARTMENT OF TRANSPORTATION

APPROVED

10/1/98 — DATE

/S/ Rory L. Rhinesmith — CHEIF ROADWAY DEVELOP ... INEER

FHWA

6

S.D.D. 15 A 3-1

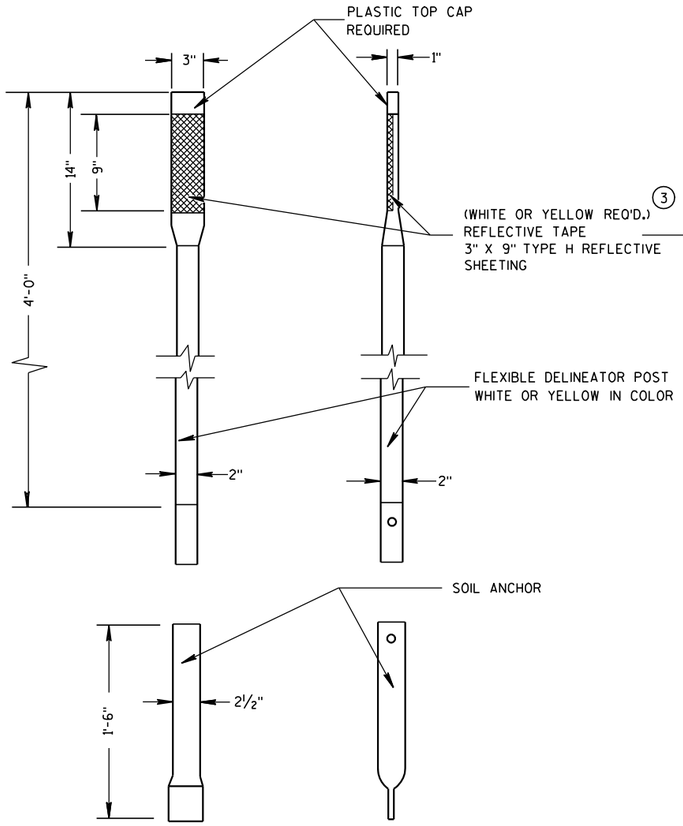

ALTERNATE 1

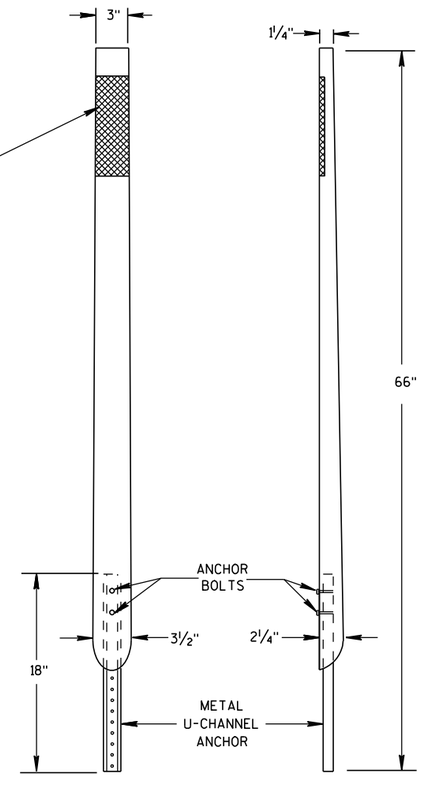

ALTERNATE 2

FLEXIBLE DELINEATOR POST

GENERAL NOTES

DETAILS OF CONSTRUCTION NOT SHOWN ON THIS DRAWING SHALL CONFORM TO THE PERTINENT REQUIREMENTS OF THE STANDATRD SPECIFICATIONS AND THE APPLICABLE SPECIAL PROVISIONS.

1. DELINEATORS SHALL BE PLACED AT A CONSTANT DISTANCE FROM THE EDGE OF THE SHOULDER FOR THE LENGTH OF THE INSTALLATION.
2. EITHER ALTERNATE NO. 1 OR NO. 2 MAY BE FURNISHED.
3. AS PER SECTION 637.2.2.2. OF THE STANDARD SPECIFICATIONS FOR HIGHWAY AND STRUCTURE CONSTRUCTION.

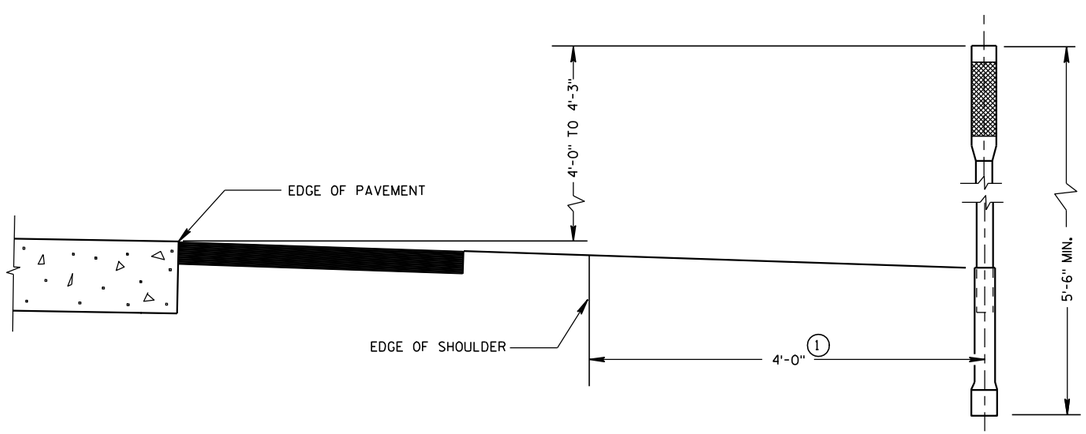

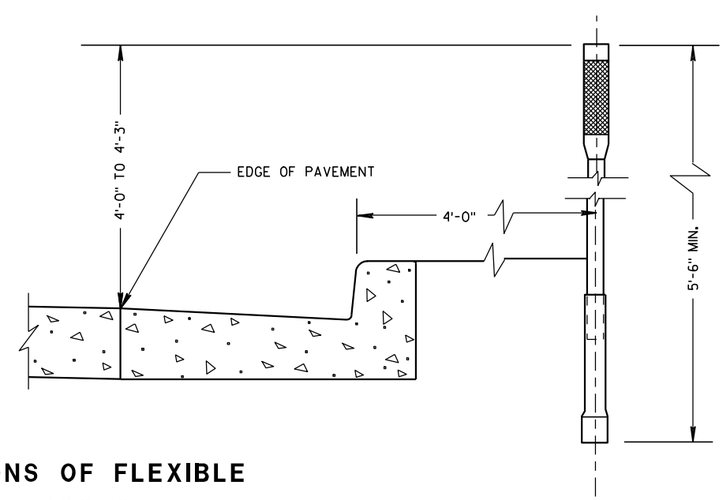

TYPICAL INSTALLATIONS OF FLEXIBLE DELINEATOR POSTS

FLEXIBLE DELINEATOR POST	
STATE OF WISCONSIN DEPARTMENT OF TRANSPORTATION	
APPROVED 11-6-01 DATE	/S/ Chester J. [illegible] CHIEF SIGNS AND MARK[illegible]ER
FHWA	

6

6

S.D.D. 15 A 4-1

S.D.D. 15 A 4-1

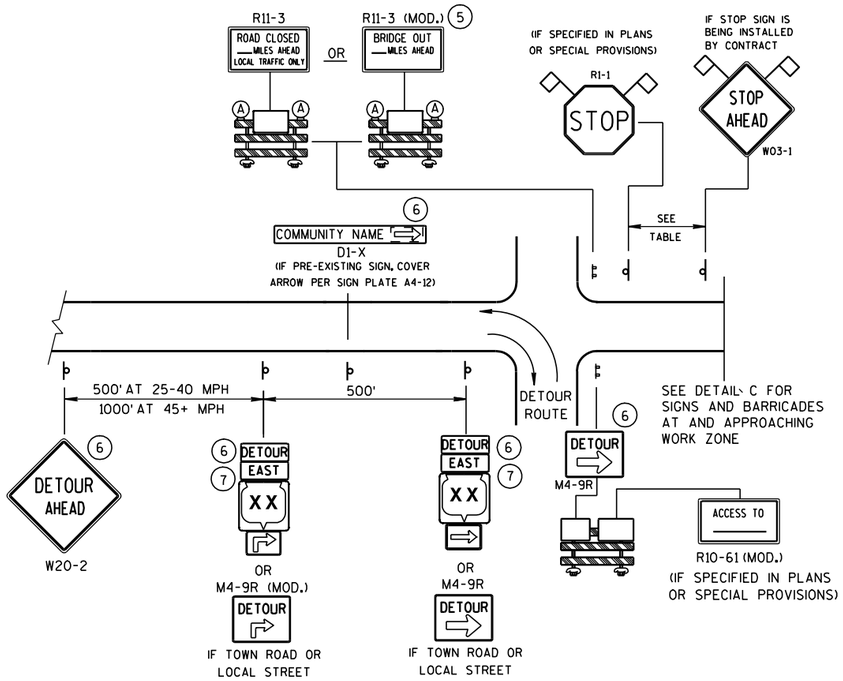

DETAIL A

MAINLINE CLOSURE WITH POSTED DETOUR

WORK ZONE GREATER THAN 1/2 MILE FROM DETOUR ROUTE (1000 FEET IF URBAN)

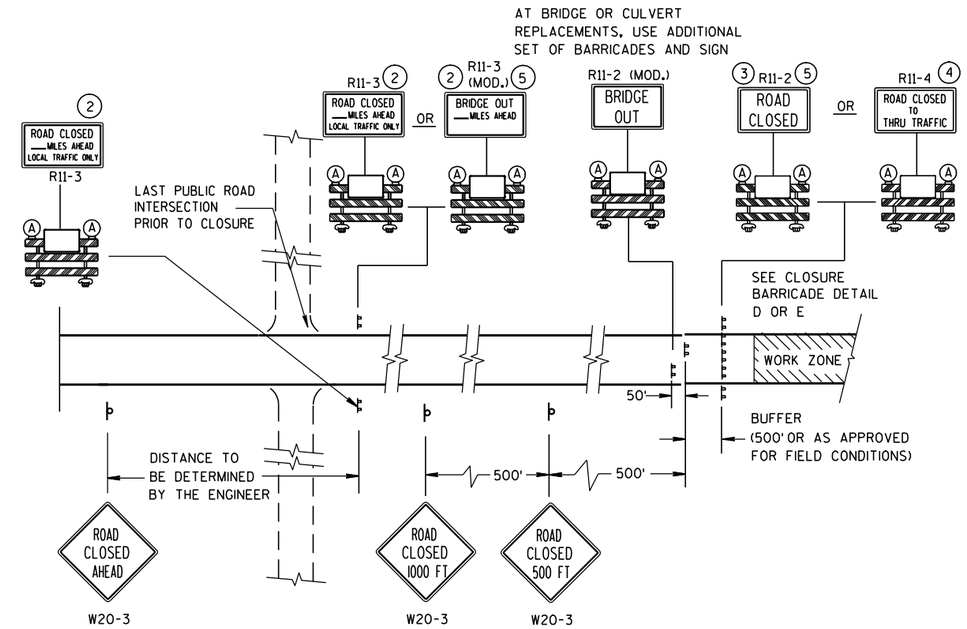

DETAIL C

MAINLINE CLOSURE, NO POSTED DETOUR

SPEED LIMIT (MPH)	"STOP AHEAD" ADVANCE WARNING DISTANCE (FT)
25	200
30	200
35	350
40	350
45	500
50	550
55	750

SEE SDD 15C2-4b FOR GENERAL NOTES AND FOOTNOTES 1 THROUGH 7

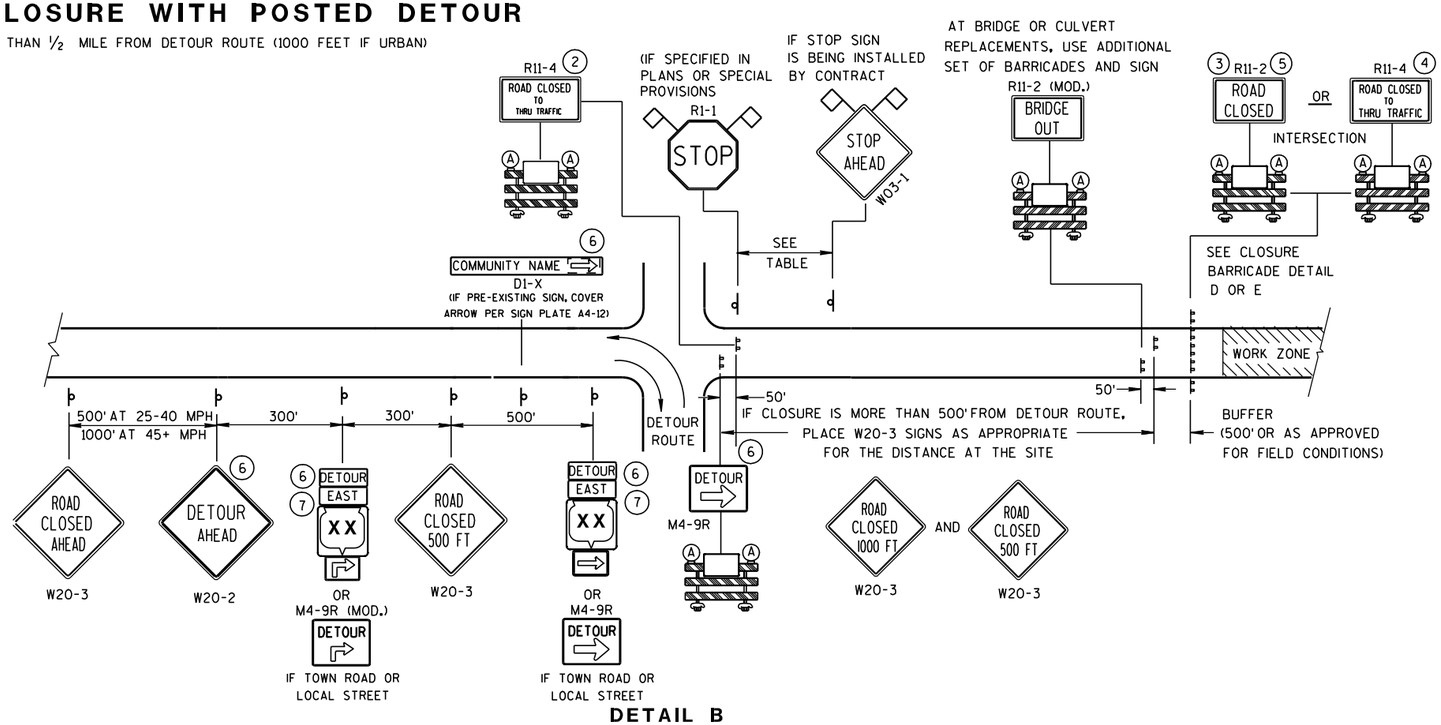

DETAIL B

MAINLINE CLOSURE WITH POSTED DETOUR

WORK ZONE LESS THAN 1/2 MILE FROM DETOUR ROUTE (1000 FEET IF URBAN)

LEGEND

- POST MOUNTED SIGN
- TYPE III BARRICADES
- TYPE "A" LOW INTENSITY FLASHING WARNING LIGHT (FOR NIGHT USE)
- WORK ZONE
- DETOUR / EAST — M4-8 / M3-X
- XX (M1-4) OR COUNTY XX (M1-5A) OR XX (M1-6)
- M05-1 OR M06-1
- FLAGS, 16" X 16" MIN., (ORANGE)

BARRICADES AND SIGNS FOR MAINLINE CLOSURES

STATE OF WISCONSIN
DEPARTMENT OF TRANSPORTATION

6

6

S.D.D. 15 C 2-4a

S.D.D. 15 C 2-4a

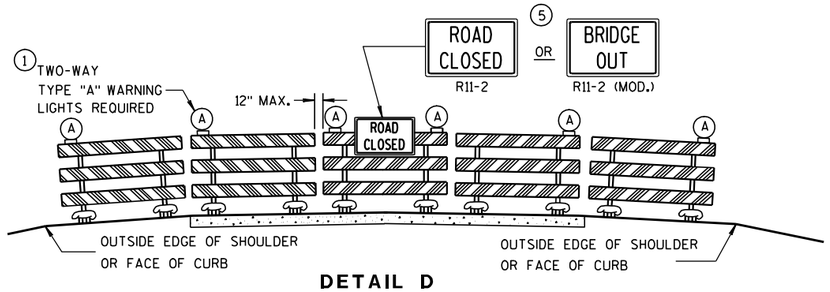

DETAIL D

ROAD CLOSURE BARRICADE DETAIL

APPROACH VIEW

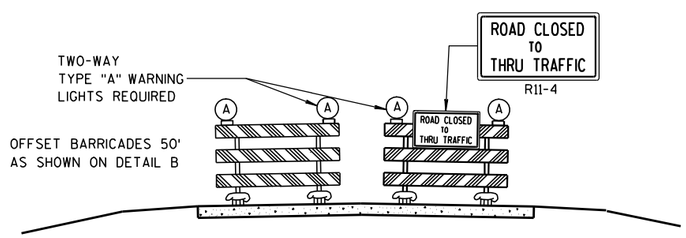

DETAIL E

LANE CLOSURE BARRICADE DETAIL

APPROACH VIEW

SEE SDD 15C2-4a FOR LEGEND

GENERAL NOTES

THE EXACT NUMBER, LOCATION, AND SPACING OF ALL SIGNS AND BARRICADES SHALL BE ADJUSTED TO FIT FIELD CONDITIONS AS APPROVED BY THE ENGINEER.

ANY SIGNS TEMPORARY OR EXISTING, WHICH CONFLICT WITH TRAFFIC CONTROL "IN USE" SHALL BE REMOVED OR COVERED AS NEEDED AND AS APPROVED BY THE ENGINEER.

THE SPACING BETWEEN TRAFFIC CONTROL SIGNS SHOULD BE ADJUSTED TO NOT CONFLICT WITH AND SHOULD PROVIDE A DESIRABLE MINIMUM OF 200 FEET CLEARANCE TO EXISTING SIGNS THAT WILL REMAIN IN PLACE.

BARRICADES THAT MUST BE MOVED FOR A WORK OPERATION SHALL BE IMMEDIATELY RE-ESTABLISHED UPON COMPLETION OF THE OPERATION OR, FOR CONTINUING OPERATIONS, AT THE END OF EACH WORKING DAY.

SIGNS THAT WILL BE IN PLACE LESS THAN 7 CONTINUOUS DAYS AND NIGHTS MAY BE MOUNTED ON PORTABLE SUPPORTS.

ALL TYPE III BARRICADES SHALL HAVE RAILS REFLECTORIZED ON BOTH FACES. STRIPES SHALL BE PROPERLY SLOPED DOWN TOWARD THE TRAFFIC SIDE OR AS SHOWN IN THE ROAD CLOSURE BARRICADE DETAIL D FOR FULL ROAD CLOSURES.

TYPE "A" LOW-INTENSITY FLASHING WARNING LIGHTS SHALL BE VISIBLE ON BOTH SIDES OF THE BARRICADE.

THE R11-2, R11-3, M4-9, R11-4 AND R10-61 SIGNS PLACED ON BARRICADES SHALL COVER NO MORE THAN THE TOP RAIL. THE SIGNS SHALL NOT COVER ANY PORTION OF THE MIDDLE OR BOTTOM RAILS.

THE REFLECTIVE SHEETING USED ON R11-2, R11-3, R11-4, R10-61 AND R1-1 SIGNS SHALL COMPLY WITH SUBSECTION 637.2.2.2 OF THE STANDARD SPECIFICATIONS.

"WO AND "MO" SIGNS ARE THE SAME AS "W" AND "M" SIGNS EXCEPT THE BACKGROUND IS ORANGE.

ALL SIGNS SHALL BE 48" X 48" UNLESS OTHERWISE NOTED BELOW:

- R11-2 SHALL BE 48" X 30".
- R11-3, R11-4 AND R10-61 SHALL BE 60" X 30".
- M4-9 SHALL BE 30" X 24".
- M3-X AND M4-8 SHALL BE 24" X 12". (30" X 15" IF NEEDED TO MATCH EXISTING SIGNS.)
- M1-4, M1-5A, AND M1-6 SHALL BE 24" X 24". (36" X 36" IF NEEDED TO MATCH EXISTING SIGNS.)
- M05-1 AND M06-1 SHALL BE 21" X 21". (30" X 30" IF NEEDED TO MATCH EXISTING SIGNS.)
- D1-X SHALL BE AS SHOWN ON SPECIFIC PROJECT SIGNING DETAIL SHEETS.
- R1-1 SHALL BE 36" X 36".

(1) TWO WARNING LIGHTS SHALL BE PROVIDED ON THE CENTER BARRICADE AND A MINIMUM OF ONE WARNING LIGHT SHALL BE PROVIDED ON EACH OF THE OTHER BARRICADES WITHIN THE ROADWAY LIMITS. SPACING OF THE WARNING LIGHTS SHALL BE UNIFORM TO THE EDGE OF ROADWAY AS SHOWN (APPROX. 8-FOOT LIGHT SPACING).

(2) THESE SIGNS AND BARRICADES ARE NOT REQUIRED IF ROAD CLOSURE BEGINS AT INTERSECTION.

(3) FOR ROAD CLOSURE WITHOUT LOCAL ACCESS TO PROJECT, SEE ROAD CLOSURE BARRICADE DETAIL D.

(4) FOR ROAD CLOSURE WITH LOCAL ACCESS TO PROJECT, SEE LANE CLOSURE BARRICADE DETAIL E.

(5) FOR BRIDGE OR CULVERT REPLACEMENTS, SUBSTITUTE "BRIDGE OUT" INSTEAD OF "ROAD CLOSED" ON R11-2 AND R11-3 SIGNS.

(6) INSTALL DETOUR AND COMMUNITY GUIDE SIGNS AND ARROWS ONLY IF SPECIFIED IN THE CONTRACT. IF THERE ARE EXISTING ROUTE MARKER ASSEMBLIES THAT WILL REMAIN IN PLACE, ADJUST THE LOCATION OF THE DETOUR ROUTE SIGNS TO CORRESPOND WITH THE EXISTING ASSEMBLIES. MODIFY EXISTING SIGNS WHERE POSSIBLE. SEE SPECIFIC PROJECT DETOUR SIGNING DETAIL SHEETS. IF DETOUR SIGNS ARE BEING INSTALLED BY OTHERS, PLACE THE CONTRACTED TRAFFIC CONTROL SIGNS TO ALLOW FOR PLACEMENT OF ALL WARNING, DETOUR AND GUIDE SIGNS AS SHOWN.

(7) "EAST" CARDINAL DIRECTION MARKERS AND RIGHT TURN ARROWS ARE SHOWN. USE OTHER CARDINAL DIRECTIONS AND ARROWS AS APPROPRIATE.

BARRICADES AND SIGNS FOR MAINLINE CLOSURES

STATE OF WISCONSIN
DEPARTMENT OF TRANSPORTATION

APPROVED

9/16/03 — DATE

/S/ Thomas N. N[illegible] — CHIEF SIGNS AND MAR[illegible]INEER

FHWA

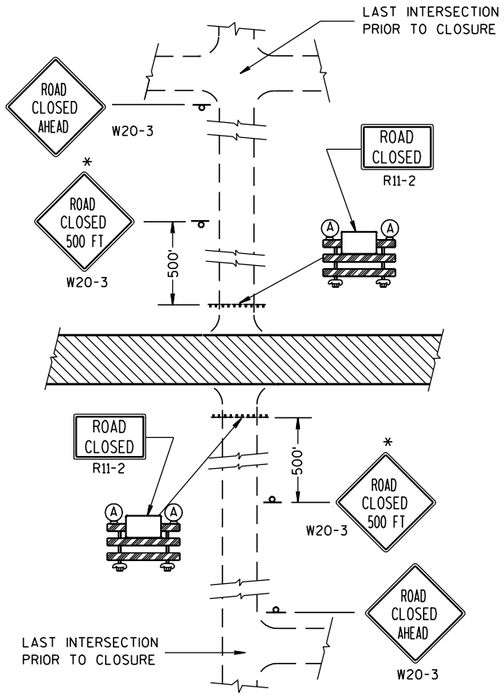

DETAIL 1

(NO ACCESS TO PROJECT)

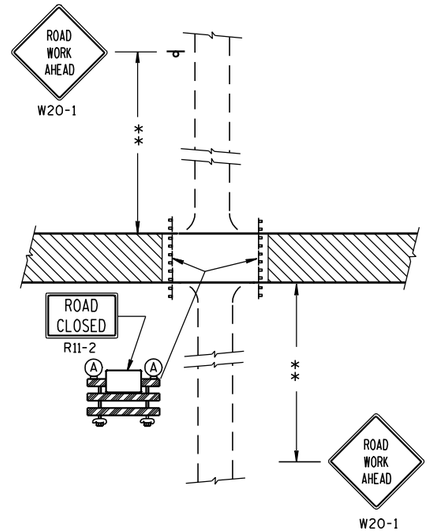

DETAIL 2

(PUBLIC CROSS-TRAFFIC MAINTAINED. NO ACCESS TO PROJECT).

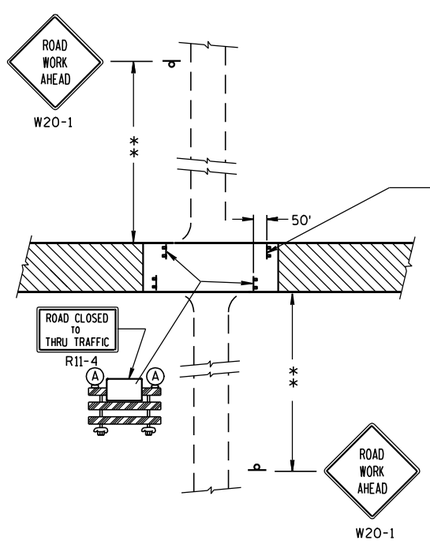

DETAIL 3

(PUBLIC CROSS-TRAFFIC MAINTAINED. CONTRACTOR, LOCAL BUSINESS AND RESIDENT ACCESS).

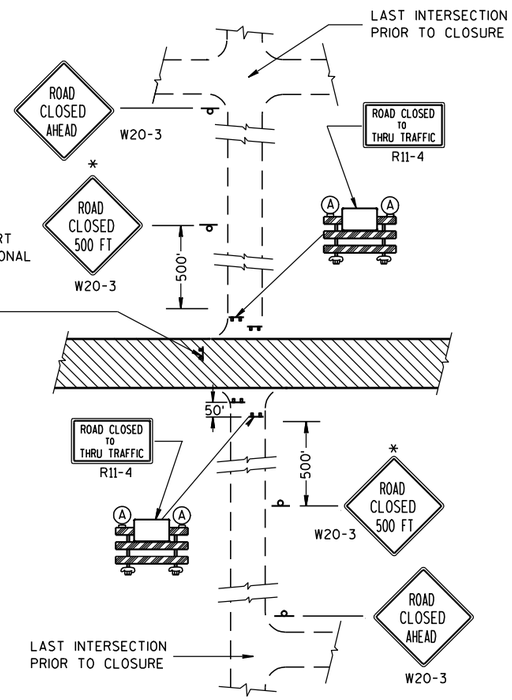

DETAIL 4

(CONTRACTOR, LOCAL BUSINESS AND RESIDENT ACCESS TO PROJECT)

GENERAL NOTES

THE EXACT NUMBER, LOCATION, AND SPACING OF ALL SIGNS AND BARRICADES SHALL BE ADJUSTED TO FIT FIELD CONDITIONS AS APPROVED BY THE ENGINEER.

ANY SIGNS TEMPORARY OR EXISTING, WHICH CONFLICT WITH TRAFFIC CONTROL "IN USE" SHALL BE REMOVED OR COVERED AS NEEDED AND AS APPROVED BY THE ENGINEER.

THE SPACING BETWEEN TRAFFIC CONTROL SIGNS SHOULD BE ADJUSTED TO NOT CONFLICT WITH AND SHOULD PROVIDE A DESIRABLE MINIMUM OF 200 FEET CLEARANCE TO EXISTING SIGNS THAT WILL REMAIN IN PLACE.

IF A "STOP" SIGN MUST BE REMOVED FOR A WORK OPERATION, A TEMPORARY "STOP" SIGN SHALL BE PLACED PRIOR TO THE SIGN REMOVAL, OR A FLAGGER SHALL BE PROVIDED UNTIL THE SIGN IS RE-ESTABLISHED.

BARRICADES THAT MUST BE MOVED FOR A WORK OPERATION SHALL BE IMMEDIATELY RE-ESTABLISHED UPON COMPLETION OF THE OPERATION OR, FOR CONTINUING OPERATIONS, AT THE END OF EACH WORKING DAY.

SIGNS THAT WILL BE IN PLACE LESS THAN 7 CONTINUOUS DAYS AND NIGHTS MAY BE MOUNTED ON PORTABLE SUPPORTS.

ALL TYPE III BARRICADES SHALL HAVE RAILS REFLECTORIZED ON BOTH FACES. STRIPES SHALL BE PROPERLY SLOPED DOWN TOWARD THE TRAFFIC SIDE OR AS SHOWN IN THE ROAD CLOSURE BARRICADE DETAIL D FOR FULL ROAD CLOSURES.

TYPE "A" LOW-INTENSITY FLASHING WARNING LIGHTS SHALL BE VISIBLE ON BOTH SIDES OF THE BARRICADE.

THE R11-2, R11-3 AND R11-4 SIGNS PLACED ON BARRICADES SHALL COVER NO MORE THAN THE TOP RAIL. THE SIGNS SHALL NOT COVER ANY PORTION OF THE MIDDLE OR BOTTOM RAILS.

THE REFLECTIVE SHEETING USED ON R11-2, R11-3 AND R11-4 SIGNS SHALL COMPLY WITH SUBSECTION 637.2.2.2 OF THE STANDARD SPECIFICATIONS.

ALL SIGNS SHALL BE 48" X 48" UNLESS OTHERWISE NOTED BELOW:
R11-2 SHALL BE 48" X 30".
R11-4 AND R11-3 SHALL BE 60" X 30".

*OMIT THE "ROAD CLOSED 500 FT." SIGN IF THE LAST INTERSECTION IS 500 FT. OR LESS FROM THE WORK ZONE.

**500' MAX. OR AT LAST INTERSECTION WHICHEVER IS CLOSER.

LEGEND

- POST MOUNTED WARNING SIGN
- TYPE III BARRICADES
- (A) TYPE "A" LOW INTENSITY FLASHING WARNING LIGHT (FOR NIGHT USE)
- WORK AREA

BARRICADES AND SIGNS FOR SIDEROAD CLOSURES

STATE OF WISCONSIN
DEPARTMENT OF TRANSPORTATION

APPROVED
9-16-03 — DATE
/S/ Thomas N. N[illegible] — CHIEF SIGNS AND MAR[illegible] INEER
FHWA

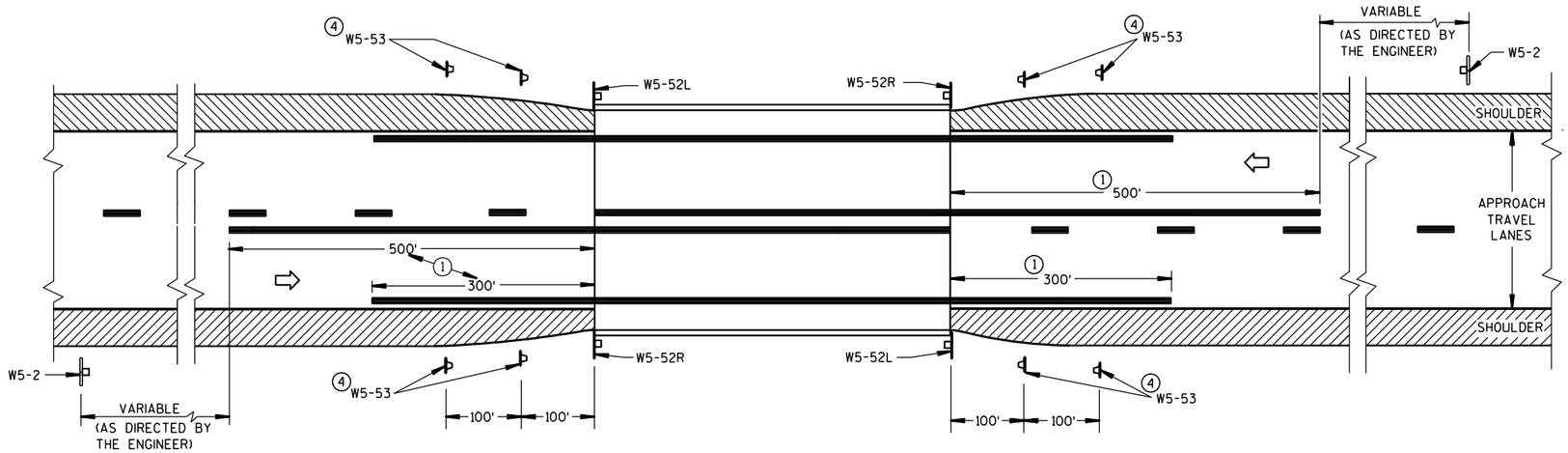

SITUATION 1

WARRANTING CRITERION:

BRIDGE WIDTH IS AT LEAST 18 FEET BUT LESS THAN 24 FEET

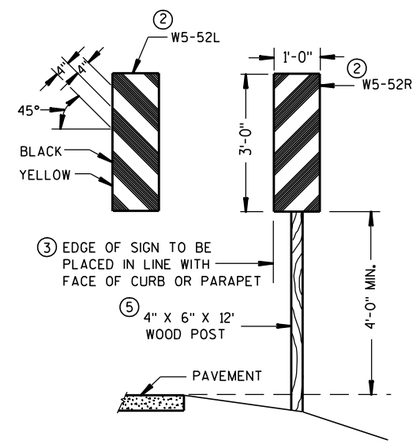

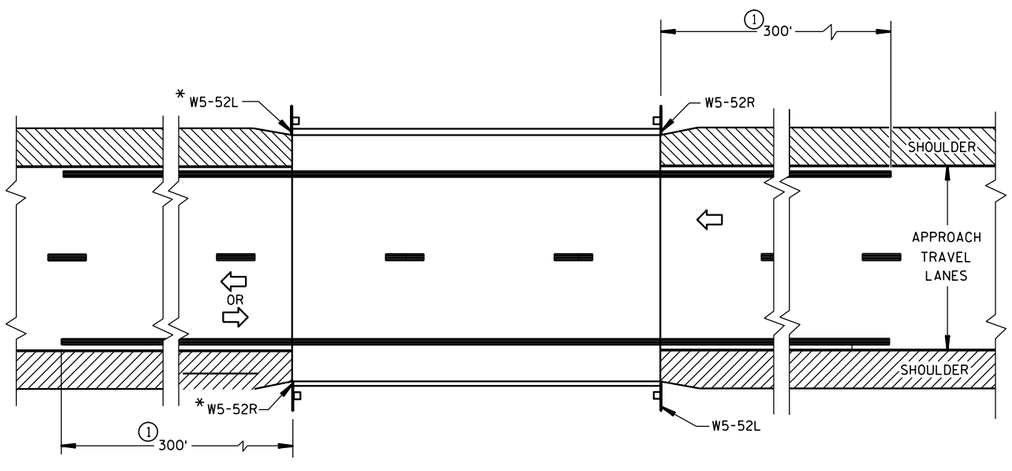

*OMIT ON ONE-WAY TRAVELLED WAYS

SITUATION 2

WARRANTING CRITERIA:

1. BRIDGE WIDTH IS AT LEAST 24 FEET AND
2. BRIDGE IS LESS THAN 6 FEET WIDER (ON EACH SIDE) THAN APPROACH TRAVEL LANES.

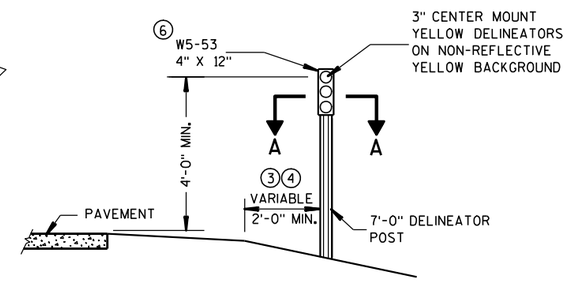

OBJECT MARKER PLACEMENT

GENERAL NOTES

DETAILS OF TRAFFIC CONTROL DEVICES AND INSTALLATION NOT SHOWN ON THIS DRAWING SHALL CONFORM TO THE PERTINENT REQUIREMENTS OF THE STANDARD SPECIFICATIONS, THE SPECIAL PROVISIONS, AND THE MANUAL ON UNIFORM TRAFFIC CONTROL DEVICES.

PAVEMENT MARKING SHOWN ON THIS DRAWING IS NOT REQUIRED UNLESS OTHERWISE SPECIFIED IN THE CONTRACT. WHEN SPECIFIED, PAVEMENT MARKING SHALL CONFORM TO THIS DRAWING AND OTHER CONTRACT REQUIREMENTS.

① MINIMUM DISTANCE UNLESS OTHERWISE SHOWN ON THE PLAN.

② FACE OF OBJECT MARKERS W5-52R AND W5-52L SHALL BE COVERED WITH TYPE H REFLECTIVE SHEETING.

③ LOCATE OBJECT MARKER POST(S) BEHIND GUARDRAIL WHEN PRESENT.

④ OBJECT MARKERS (W5-53) SHALL BE LOCATED ALONG A LINE FLARED AWAY FROM THE BRIDGE CORNER TO DELINEATE THE NARROWING OF THE SHOULDER OR BERM.

⑤ A 12 FOOT DELINEATOR POST MAY BE USED INSTEAD OF A WOOD POST.

⑥ NON-BID ITEM. INCIDENTAL TO OTHER ITEMS.

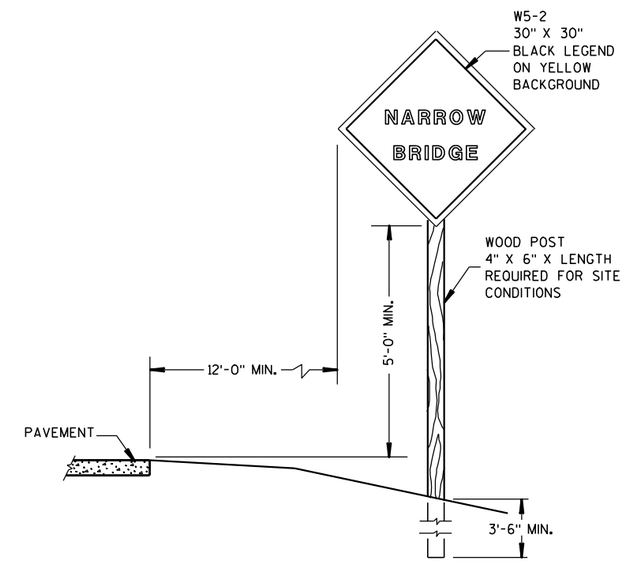

SIGN PLACEMENT

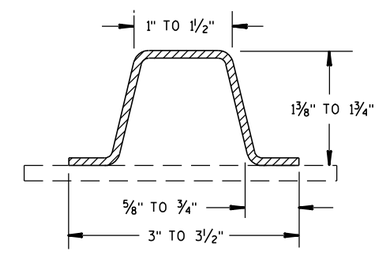

SECTION A-A

(MINIMUM WEIGHT 1.9 LBS. PER FT. AFTER GALVANIZING)

SIGNING & MARKING FOR TWO LANE BRIDGES

STATE OF WISCONSIN
DEPARTMENT OF TRANSPORTATION

APPROVED

9/5/06 — DATE

/S/ Thomas N. [illegible] — STATE TRAFFIC ENGINEER

FHWA

6

6

S.D.D. 15 C 6-5

S.D.D. 15 C 6-5

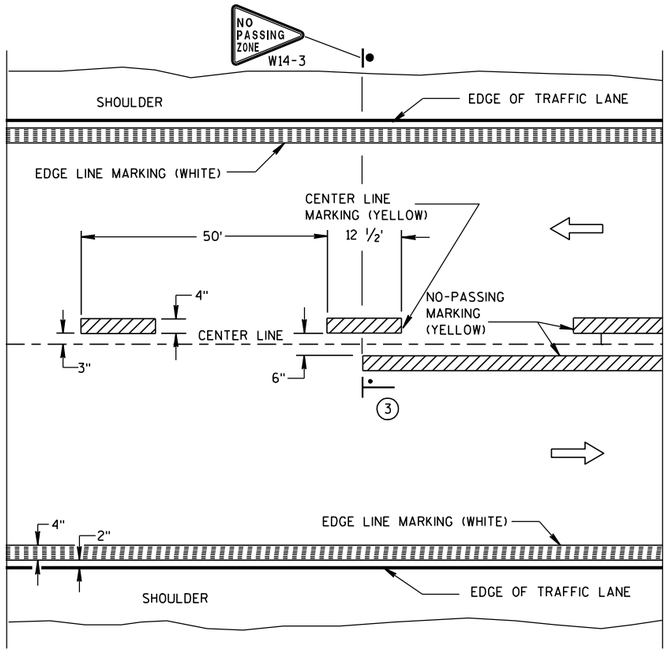

TWO WAY TRAFFIC

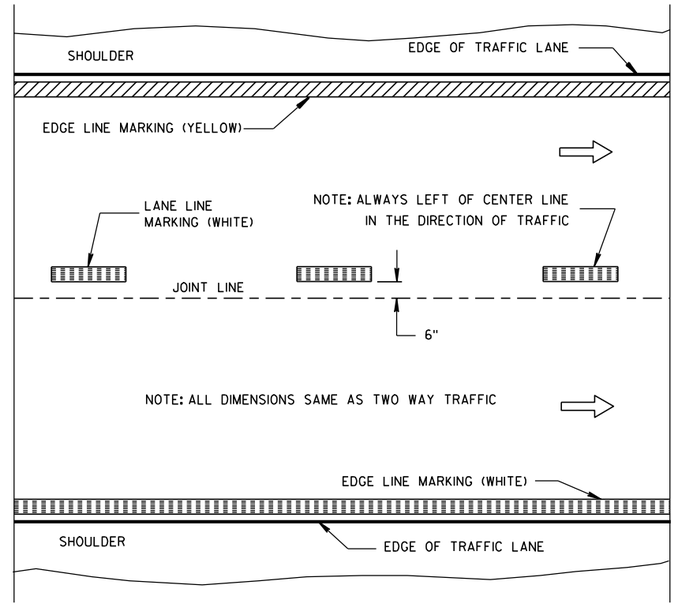

ONE WAY TRAFFIC

PERMANENT PAVEMENT MARKING

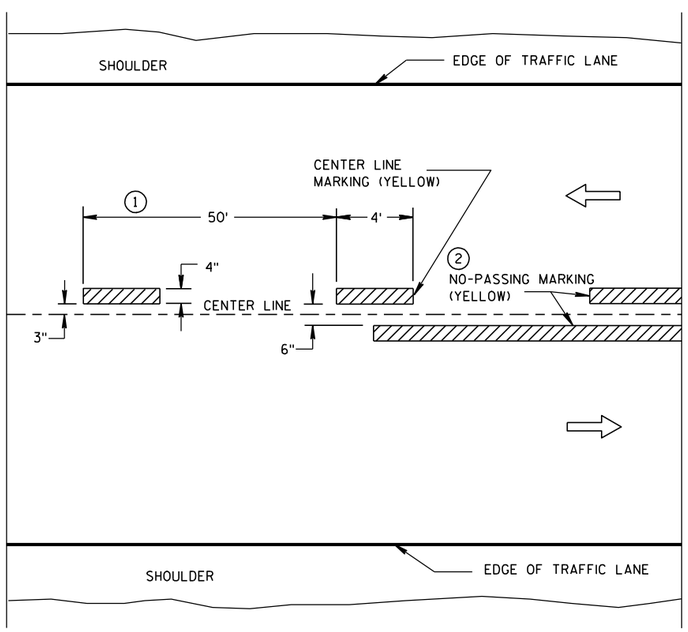

TWO WAY TRAFFIC

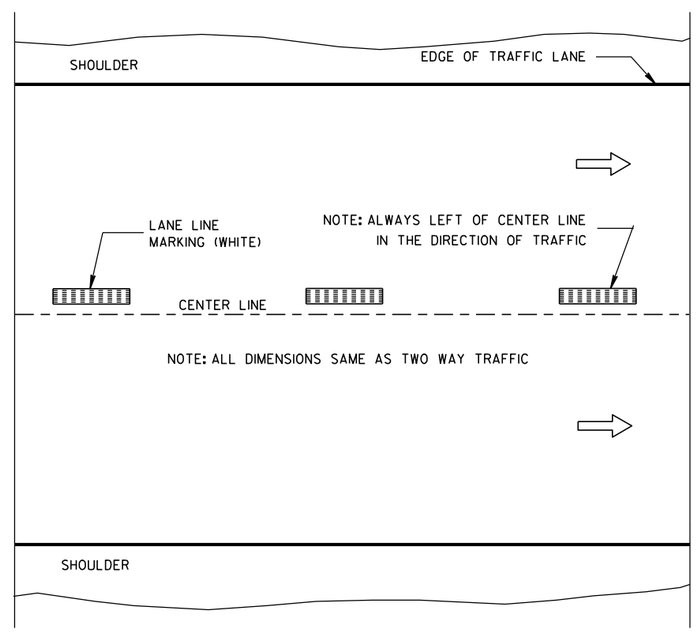

ONE WAY TRAFFIC

TEMPORARY (INTERMEDIATE) PAVEMENT MARKING

(SHOWS CYCLE FOR TEMPORARY CENTER LINE OR TEMPORARY LANE LINE MARKING)

GENERAL NOTES

DETAILS OF CONSTRUCTION NOT SHOWN ON THIS DRAWING SHALL CONFORM TO STANDARD SPECIFICATIONS AND SPECIAL PROVISIONS.

1. HALF CYCLE LENGTHS (25'±) WITH 2' MINIMUM STRIPE LENGTHS SHALL BE PROVIDED ON ROADWAYS (INCLUDING TEMPORARY TRAVELED WAYS) WITH REVERSE CURVATURE, CURVATURE OF OVER 5 DEGREES OR WHEN DIRECTED BY THE ENGINEER TO MARK UNUSUAL ALIGNMENT OF THE TRAVELED WAY.
2. NO PASSING ZONE TEMPORARY PAVEMENT MARKING IS REQUIRED TO BE PLACED, WHERE APPROPRIATE, ALONG WITH CENTERLINE TEMPORARY PAVEMENT MARKING WHEN A SAME DAY PERMANENT PAVEMENT MARKING ITEM IS INCLUDED IN THE CONTRACT.
3. NO PASSING ZONE MARKINGS ARE PLACED ACCORDING TO "T" MARKINGS. IF EXISTING NO PASSING ZONE W14-3 SIGNS ARE BEYOND 50 FEET IN EITHER DIRECTION, THE SIGNS SHALL BE MOVED TO THE "T" MARKINGS.

NOTE

ARROW SYMBOL (⇨) SHOWS DIRECTION OF TRAVEL

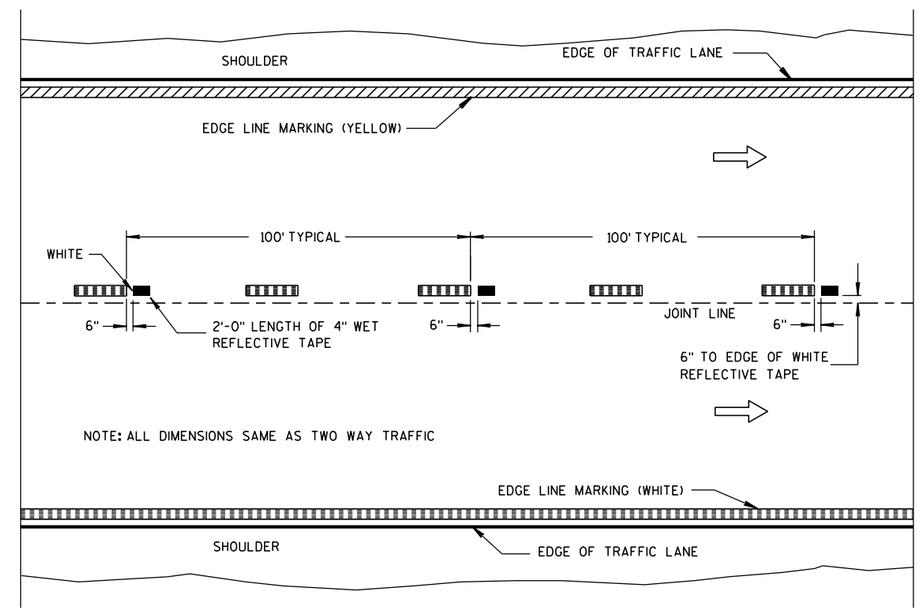

WET REFLECTIVE TAPE SUPPLEMENT TO SPRAYED OR NON WET REFLECTIVE TAPE LANE LINE

LEGEND

"T" MARKING

POST MOUNTED SIGN

PAVEMENT MARKING (MAINLINE)

STATE OF WISCONSIN
DEPARTMENT OF TRANSPORTATION

APPROVED
6-23-11 /S/ Thomas N. Notbohm
DATE STATE TRAFFIC ENGINEER
FHWA

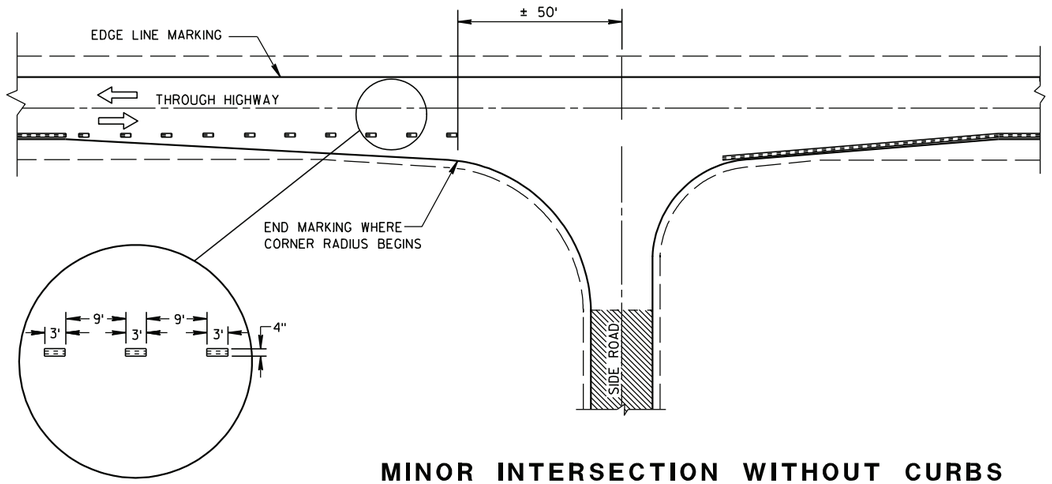

MINOR INTERSECTION WITHOUT CURBS

GENERAL NOTES

EDGE LINES SHALL BE OMITTED THROUGH INTERSECTIONS. EDGE LINES SHALL BE CONTINUED THROUGH DRIVEWAYS.

1. WHEN DISTANCE "A" IS LESS THAN 250 FEET, OMIT LANE LINE.
2. WHEN DISTANCE "B" IS LESS THAN 100 FEET, OMIT CHANNELIZING LANE LINE.
3. ALTERNATIVE MARKING SHALL BE PROVIDED WHEN SPECIFIED IN THE CONTRACT. TYPICAL SITUATIONS WHERE THIS MARKING MAY BE REQUIRED ARE WHERE THE INTERSECTION IS ON A SHARP HORIZONTAL CURVE OR CREST VERTICAL CURVE IN AN UNLIGHTED AREA SUCH THAT THE EDGE LINE MAY BE MISLEADING TO THE MOTORIST OR DISAPPEAR FROM SIGHT.
4. THE EDGE LINE IN THE TAPER AREAS OF THE BYPASS LANE AND THE BYPASS LANE SHALL BE LOCATED 1-FOOT FROM EDGE OF PAVEMENT TO THE OUTSIDE EDGE OF EDGE LINE.
5. BARRIER LINE ENDS AT SIDE ROAD PAVEMENT/SURFACE EDGE EXTENSION.
6. BARRIER LINE STARTS 500 FEET PRIOR TO THE BYPASS TAPER.
7. IF THE DISTANCE BETWEEN 2 SUCCESSIVE NO-PASSING ZONES IS LESS THAN THE MINIMUM DISTANCE BETWEEN ZONES, CONNECT THE 2 ZONES.
8. 3' LINE 9' GAP, EXCEPT RETRACE THE EXISTING LINE - GAP PATTERN WHERE EXISTING MARKINGS ARE IN PLACE.

ARROW SYMBOL (⇨) SHOWS DIRECTION OF TRAVEL

(7)

POSTED SPEED (MPH)	MINIMUM DISTANCE BETWEEN ZONES (FEET)
25 - 30	528
35 - 40	528
45 - 50	686
55	792

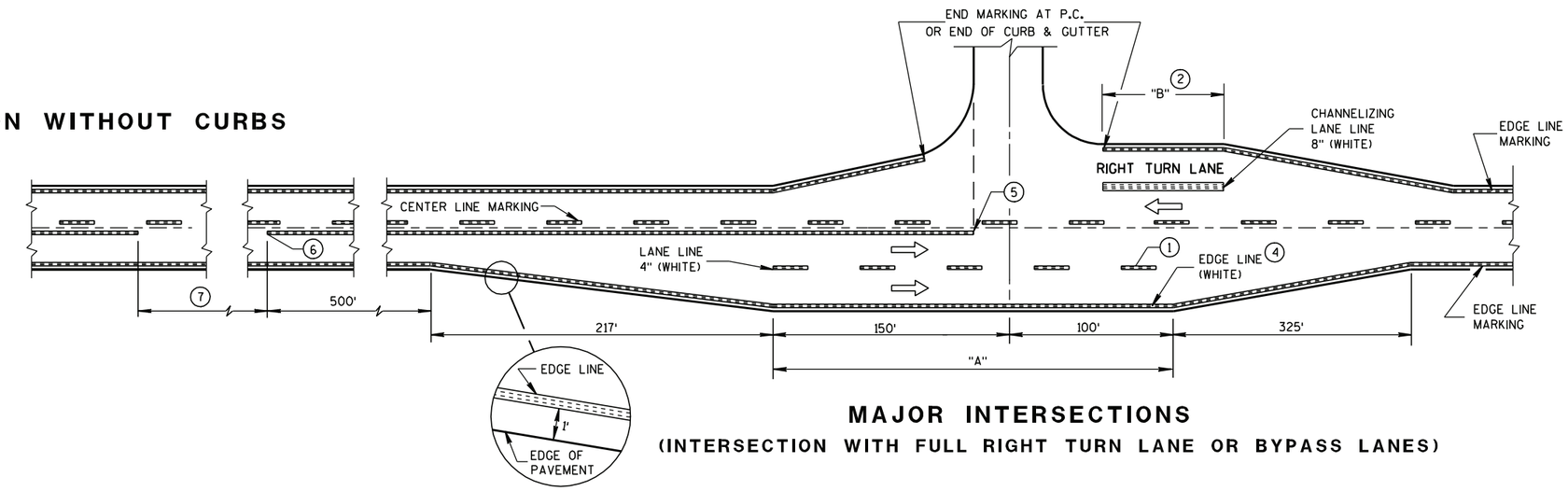

MAJOR INTERSECTIONS
(INTERSECTION WITH FULL RIGHT TURN LANE OR BYPASS LANES)

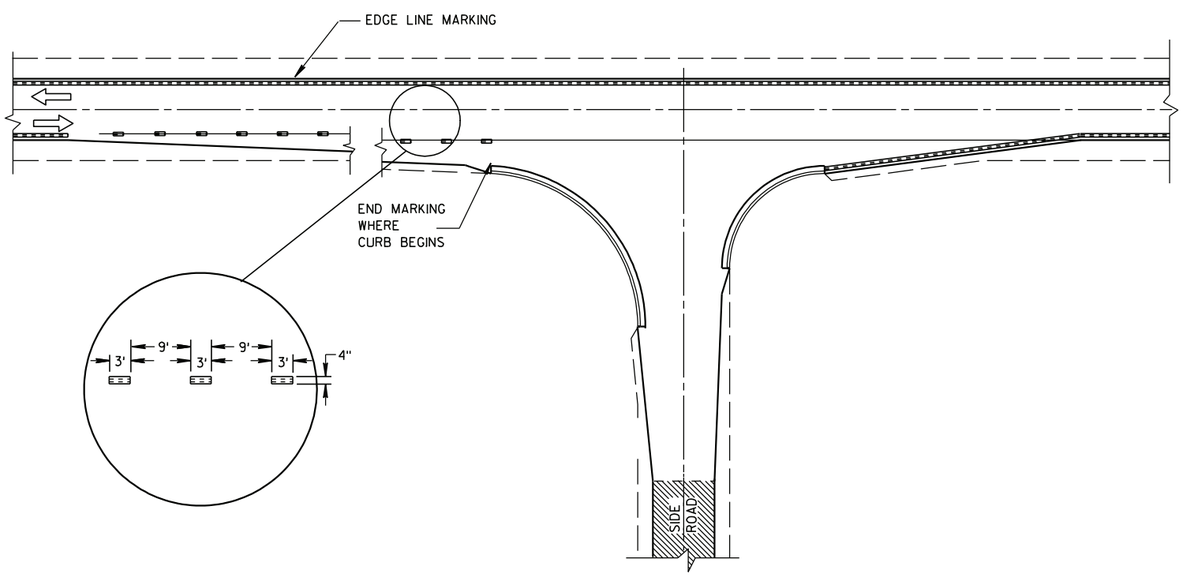

MINOR INTERSECTION WITH CURBS
(TYPICAL MARKING)

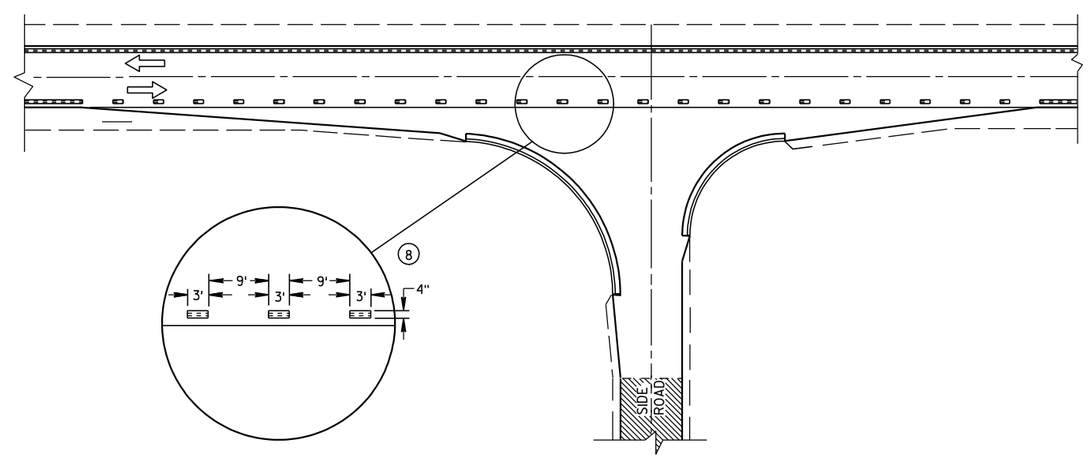

MINOR INTERSECTION WITH CURBS
(3) (FOR SPECIAL CONDITIONS AS SPECIFIED)

PAVEMENT MARKING (INTERSECTIONS)

STATE OF WISCONSIN
DEPARTMENT OF TRANSPORTATION

6

6

S.D.D. 15 C 8-14b

S.D.D. 15 C 8-14b

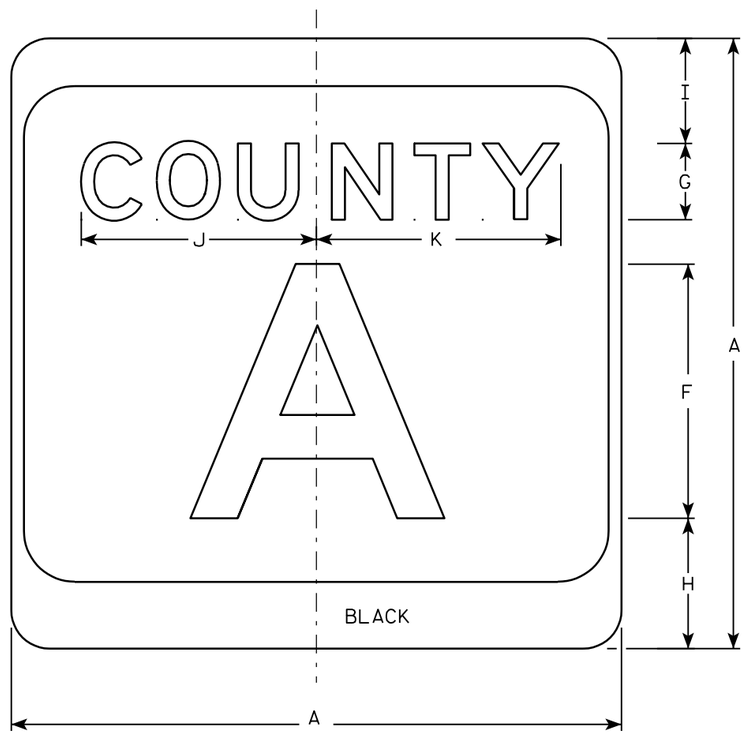

M1-5A

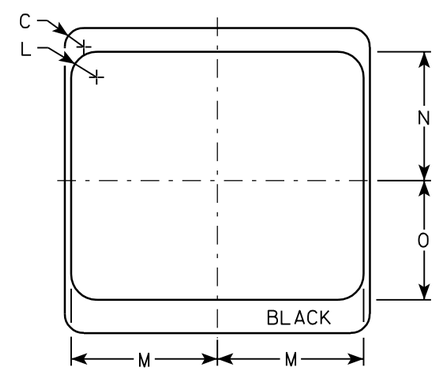

NOTES

1. Sign is Type II - see Note 7 - reference WIS DOT Standard Specification for HIGHWAY and STRUCTURE CONSTRUCTION latest edition.
2. Color:
   Background - White & Black - See Note 7
   Message - Black
3. Message Series - see Note 5
4. Corners may be square or rounded when base material is plywood but borders shall be rounded as shown. When base material is metal, the corners and borders shall be rounded.
5. Message Series E for 1 letter.
   Message Series D for 2 letters unless message is too big then Series C.
   Message Series C for 3 letters unless message is too big then Series B.
6. Substitute appropirate letters & optically adjust spacing to achieve proper balance.
7. Permanent Signs
   Background - Type H Reflective
   Detour or temporary Signs
   Background - Reflective

7

Metric equivalent for this sign is:

SIZE	
1	
2	600 mm X 600 mm
3	900 mm X 900 mm
4	900 mm X 900 mm
5	900 mm X 900 mm

SIZE	A	B	C	D	E	F	G	H	I	J	K	L	M	N	O	P	Q	R	S	T	U	V	W	X	Y	Z	Area sq. ft.	Area m2
1																												
2	24		1 1/2			10	3	5 1/8	4 1/8	9 1/4	9 5/8	2	11 1/2	10 1/8	9 3/8												4.0	.36
3	36		2 1/4			16	4	7 5/8	5 5/8	12 1/4	12 7/8	3	17 1/8	15 1/4	14												9.0	.81
4	36		2 1/4			16	4	7 5/8	5 5/8	12 1/4	12 7/8	3	17 1/8	15 1/4	14												9.0	.81
5	36		2 1/4			16	4	7 5/8	5 5/8	12 1/4	12 7/8	3	17 1/8	15 1/4	14												9.0	.81

CTH MARKER
M1-5A FOR ASSEMBLIES

WISCONSIN DEPT OF TRANSPORTATION

APPROVED Chester J Spagg for State Traffic Engineer

DATE 3/20/02 PLATE NO. M1-5A.7

PROJECT NO:	HWY:	COUNTY:		SHEET NO: 112	E

NOTES

1. Sign is Type II - Type H Reflective - reference WIS DOT Standard Specification for HIGHWAY and STRUCTURE CONSTRUCTION latest edition.
2. Color:
   Background - Yellow
   Message - Black
3. Corners may be square or rounded when base material is plywood but borders shall be rounded as shown. When base material is metal, the corners and borders shall be rounded.
4. W1-2L is the same as W1-2R except the arrow is reversed along the vertical centerline.

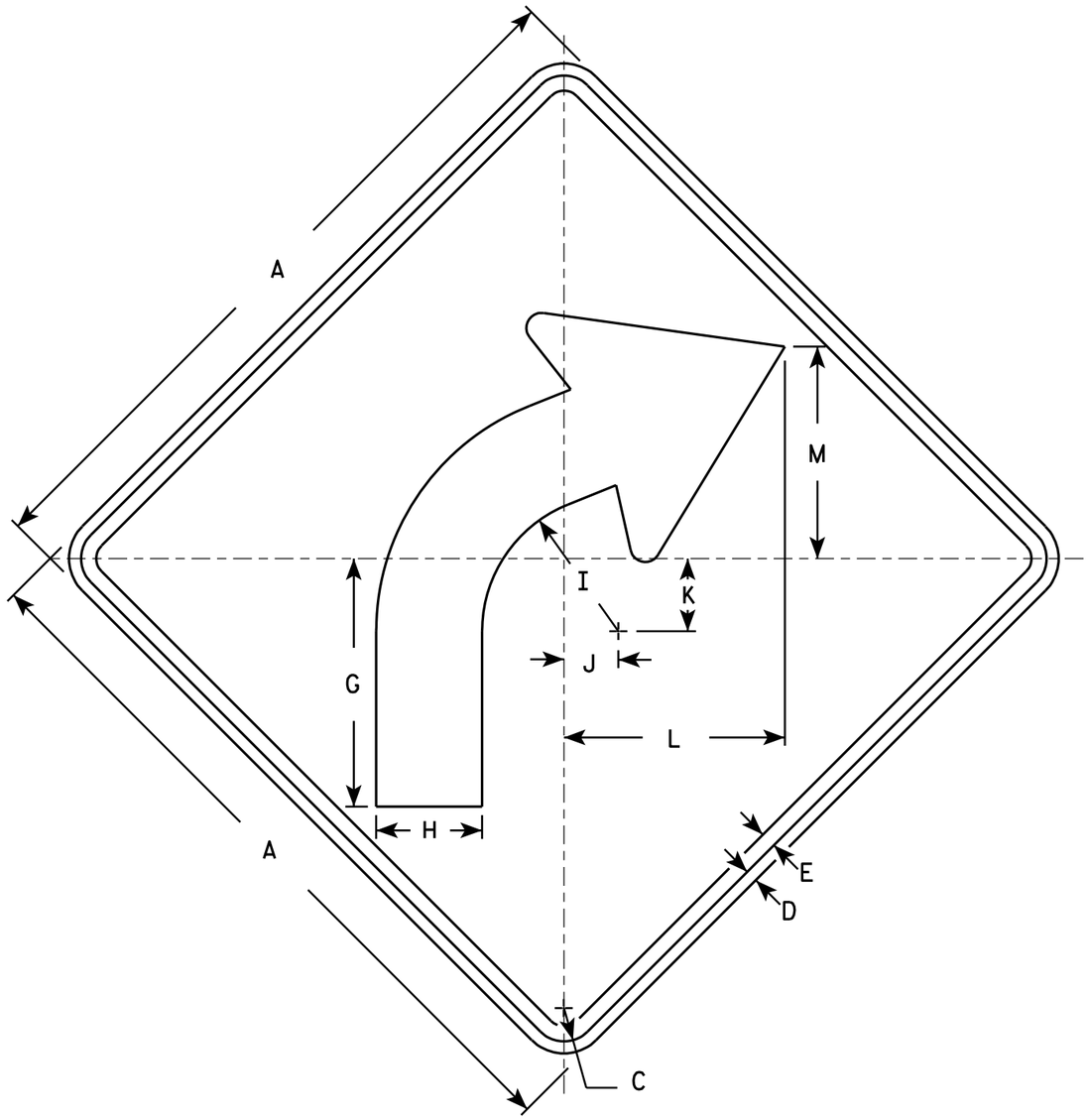

W1-2R

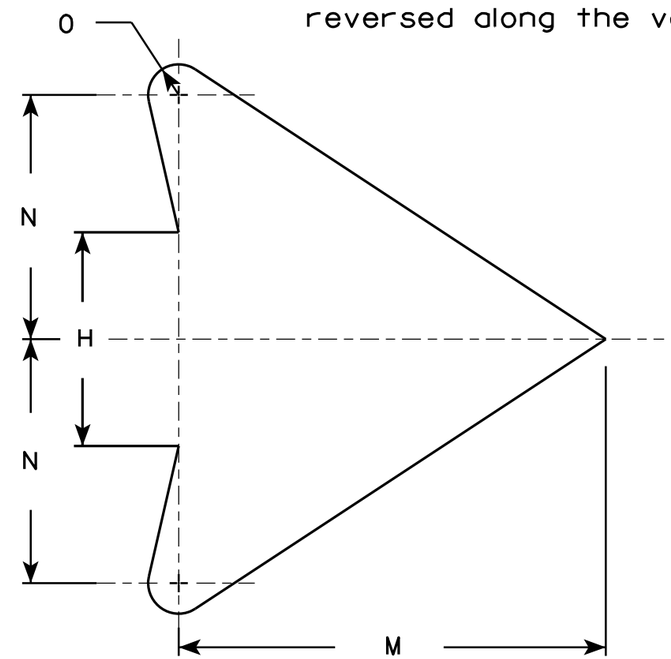

ARROW DETAIL

SIZE	A	B	C	D	E	F	G	H	I	J	K	L	M	N	O	P	Q	R	S	T	U	V	W	X	Y	Z	Area sq. ft.
1	24		1 1/8	3/8	1/2		8 1/4	3 1/2	4 1/2	1 3/4	2 3/8	7 1/4	7	4	1/2												4.0
2S	30		1 3/8	1/2	5/8		10 1/4	4 3/8	5 5/8	2 1/4	3	9 1/8	8 3/4	5	5/8												6.25
2M	36		1 5/8	5/8	3/4		12 3/8	5 1/4	6 3/4	2 5/8	3 1/2	10 7/8	10 1/2	6	3/4												9.0
3	36		1 5/8	5/8	3/4		12 3/8	5 1/4	6 3/4	2 5/8	3 1/2	10 7/8	10 1/2	6	3/4												9.0
4	36		1 5/8	5/8	3/4		12 3/8	5 1/4	6 3/4	2 5/8	3 1/2	10 7/8	10 1/2	6	3/4												9.0
5	48		2 1/4	3/4	1		16 1/2	7	9	3 1/2	4 5/8	14 1/2	14	8	1												16.0

STANDARD SIGN
W1-2

WISCONSIN DEPT OF TRANSPORTATION

APPROVED Matthew R Rauch
for State Traffic Engineer

DATE 4/18/11 PLATE NO. W1-2.9

PROJECT NO:	HWY:	COUNTY:		SHEET NO: 113	E

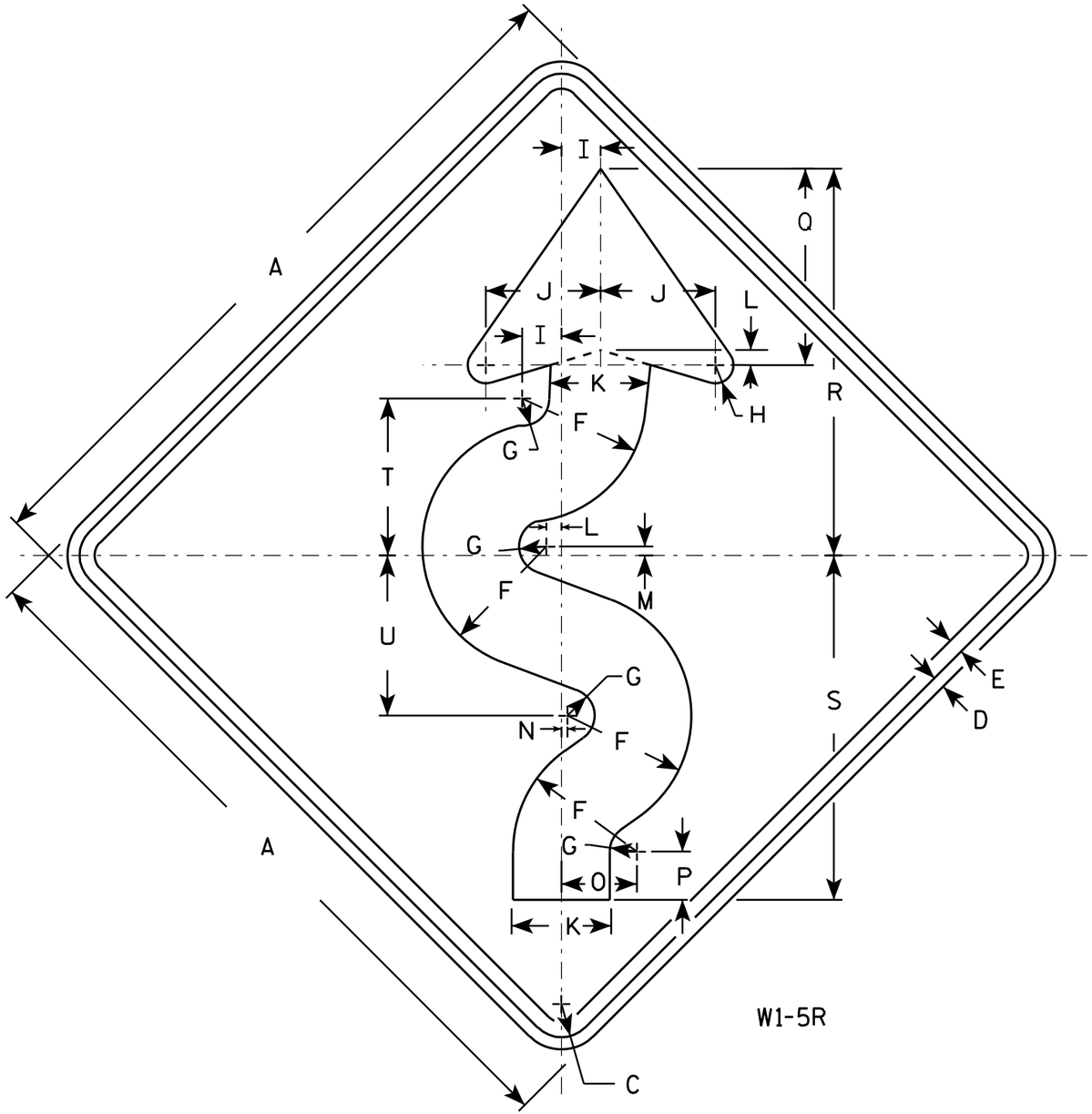

W1-5R

NOTES

1. Sign is Type II - Type H Reflective - reference WIS DOT Standard Specification for HIGHWAY and STRUCTURE CONSTRUCTION latest edition.
2. Color:
   Background - Yellow
   Message - Black
3. Corners may be square or rounded when base material is plywood but borders shall be rounded as shown. When base material is metal, the corners and borders shall be rounded.
4. W1-5L is the same as W1-5R except the arrow is reversed along the vertical centerline.

SIZE	A	B	C	D	E	F	G	H	I	J	K	L	M	N	O	P	Q	R	S	T	U	V	W	X	Y	Z	Area sq. ft.
1	24		1 1/8	3/8	1/2	4 1/8	7/8	5/8	1 1/4	3 3/4	3 1/4	1/2	1/4	1/8	2 1/2	1 5/8	6 1/2	12 3/4	11 3/8	5 1/4	5 1/4						4.0
2S	30		1 3/8	1/2	5/8	5 1/8	1 1/8	3/4	1 5/8	4 3/4	4 1/8	5/8	3/8	1/4	3 1/8	2	8 1/8	16	14 1/4	6 1/2	6 5/8						6.25
2M	36		1 5/8	5/8	3/4	6 1/4	1 3/8	1	1 7/8	5 5/8	4 7/8	3/4	3/8	1/4	3 3/4	2 7/8	9 3/4	19 1/8	17 1/8	7 3/4	7 7/8						9.0
3	36		1 5/8	5/8	3/4	6 1/4	1 3/8	1	1 7/8	5 5/8	4 7/8	3/4	3/8	1/4	3 3/4	2 7/8	9 3/4	19 1/8	17 1/8	7 3/4	7 7/8						9.0
4	36		1 5/8	5/8	3/4	6 1/4	1 3/8	1	1 7/8	5 5/8	4 7/8	3/4	3/8	1/4	3 3/4	2 7/8	9 3/4	19 1/8	17 1/8	7 3/4	7 7/8						9.0
5	48		2 1/4	3/4	1	8 1/4	1 3/4	1 1/4	2 1/2	7 1/2	6 1/2	1	1/2	3/8	5	3 1/4	13	25 1/2	22 3/4	10 3/8	10 1/2						16.0

STANDARD SIGN
W1-5

WISCONSIN DEPT OF TRANSPORTATION

APPROVED Matthew R Rauch for State Traffic Engineer

DATE 4/18/11 PLATE NO. W1-5.7

PROJECT NO: | HWY: | COUNTY: | SHEET NO: 114 | E

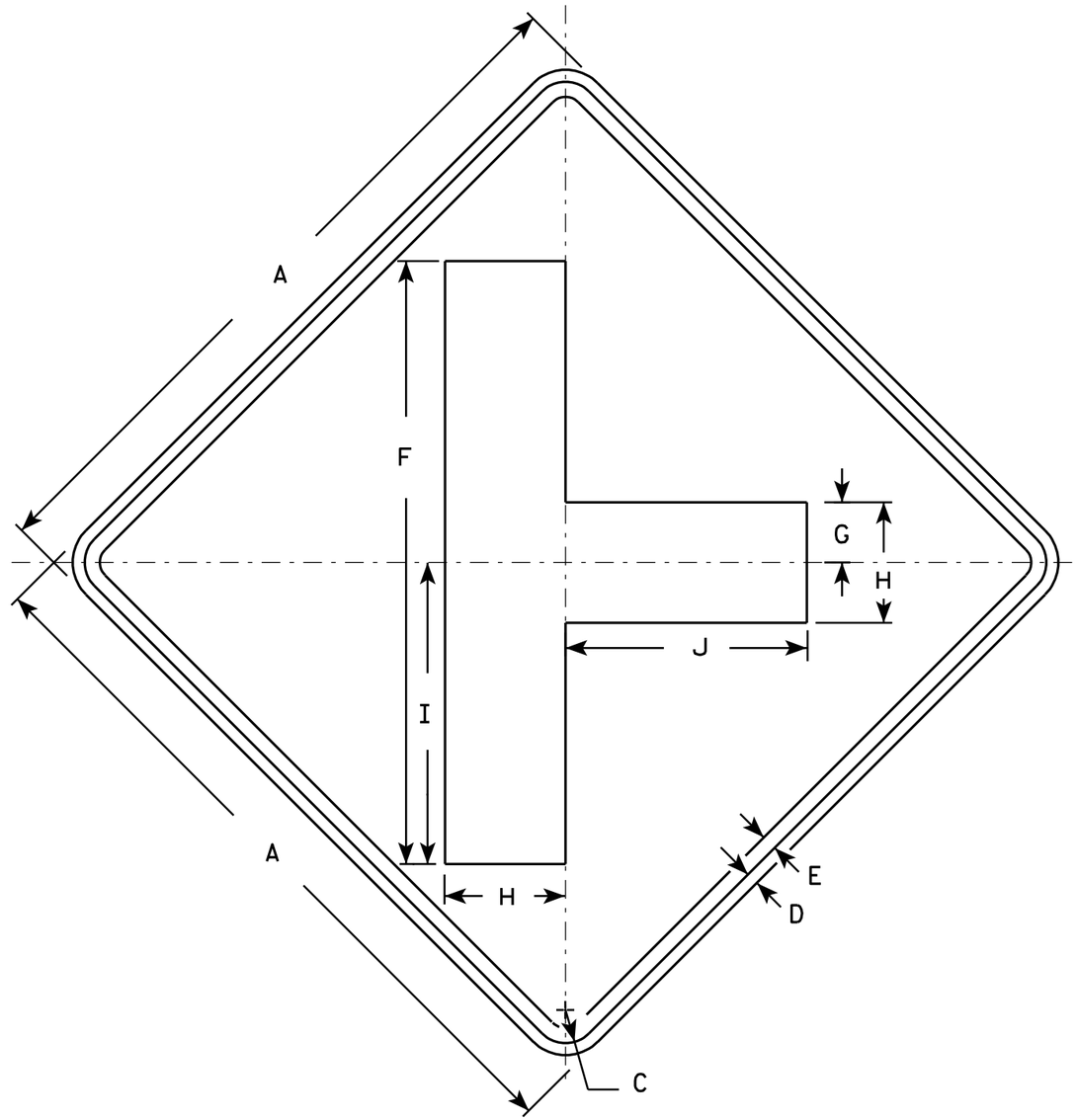

W2-2

NOTES

1. Sign is Type II - Type H Reflective - reference WIS DOT Standard Specification for HIGHWAY and STRUCTURE CONSTRUCTION latest edition.
2. Color:
   Background - Yellow
   Message - Black
3. Corners may be square or rounded when base material is plywood but borders shall be rounded as shown. When base material is metal, the corners and borders shall be rounded.

SIZE	A	B	C	D	E	F	G	H	I	J	K	L	M	N	O	P	Q	R	S	T	U	V	W	X	Y	Z	Area sq. ft.
1	24		1 1/8	3/8	1/2	20	2	4	10	8																	4.0
2S	30		1 3/8	1/2	5/8	25	2 1/2	5	12 1/2	10																	6.25
2M	30		1 3/8	1/2	5/8	25	2 1/2	5	12 1/2	10																	6.25
3	36		1 5/8	5/8	3/4	30	3	6	15	12																	9.0
4	48		2 1/4	3/4	1	40	4	8	20	16																	16.0
5																											

STANDARD SIGN
W2-2

WISCONSIN DEPT OF TRANSPORTATION

APPROVED Matthew R Rauch
for State Traffic Engineer

DATE 3/21/11 PLATE NO. W2-2.5

PROJECT NO:	HWY:	COUNTY:		SHEET NO: 115	E

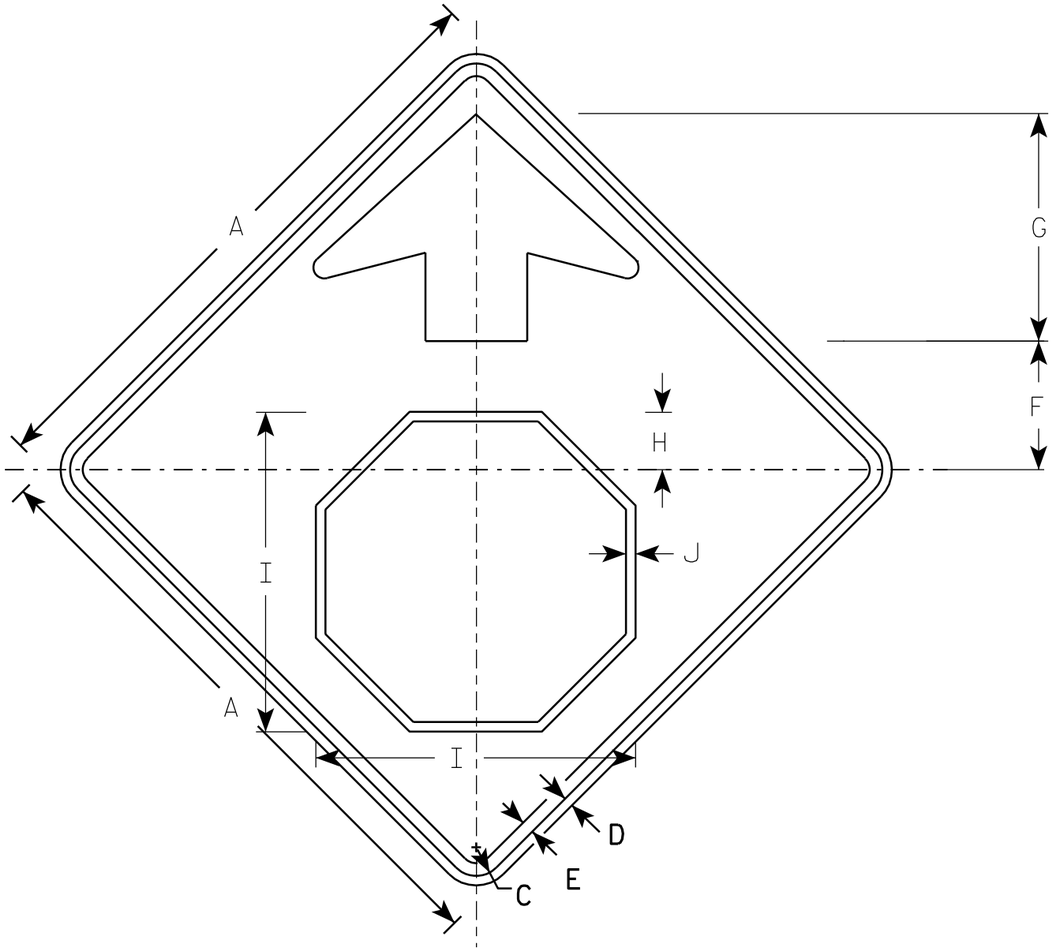

W3-1

NOTES

1. All Signs Type II - Type F Reflective - reference WIS DOT Standard Specification for HIGHWAY and STRUCTURE CONSTRUCTION latest edition.
2. Color:
   - Background - YELLOW
   - Arrow & Border - BLACK
   - Stop Symbol - WHITE BORDER ON RED BACKGROUND

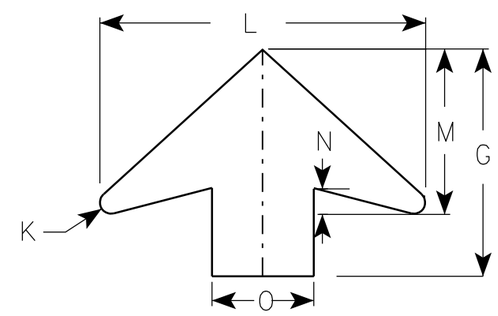

ARROW DETAIL

SIZE	A	B	C	D	E	F	G	H	I	J	K	L	M	N	O	P	Q	R	S	T	U	V	W	X	Y	Z	Area sq. ft.
1	30		1 3/8	1/2	5/8	6 1/4	11 1/4	2 7/8	15 3/4	1/2	1/2	16	8	1 1/4	5												6.25
2S	36		1 5/8	5/8	3/4	7 1/2	13 1/2	3 1/2	19	5/8	5/8	19 1/4	9 3/4	1 5/8	6												9.0
2M	36		1 5/8	5/8	3/4	7 1/2	13 1/2	3 1/2	19	5/8	5/8	19 1/4	9 3/4	1 5/8	6												9.0
3	36		1 5/8	5/8	3/4	7 1/2	13 1/2	3 1/2	19	5/8	5/8	19 1/4	9 3/4	1 5/8	6												9.0
4	48		2 1/4	3/4	1	10	17 7/8	4 1/2	25 1/8	3/4	7/8	25 5/8	13	2	8												16.0
5	48		2 1/4	3/4	1	10	17 7/8	4 1/2	25 1/8	3/4	7/8	25 5/8	13	2	8												16.0

STANDARD SIGN
W3-1

WISCONSIN DEPT OF TRANSPORTATION

APPROVED Matthew R Rauch
for State Traffic Engineer

DATE 6/7/10 PLATE NO. W3-1.12

PROJECT NO:

SHEET NO: 116 E

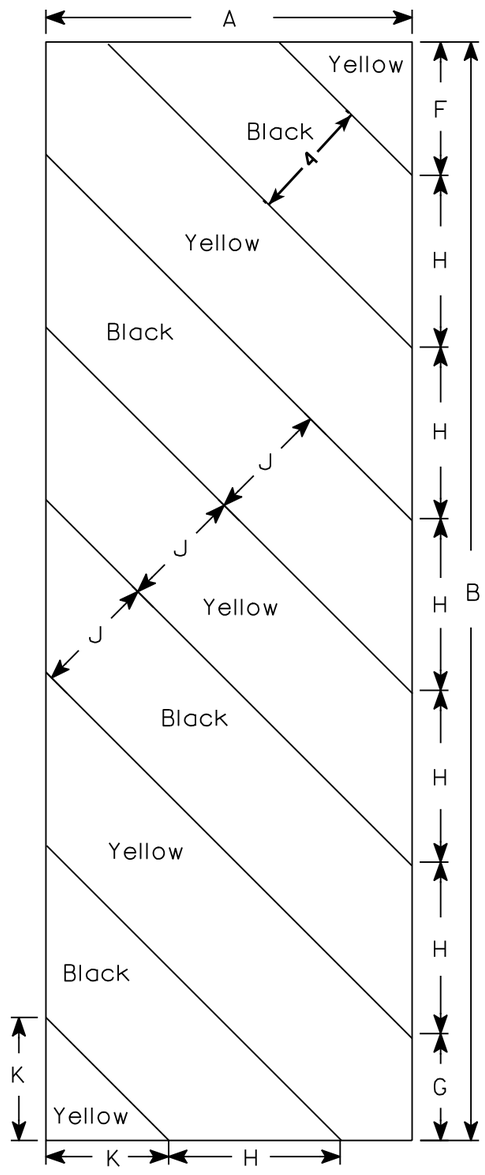

W5-52L

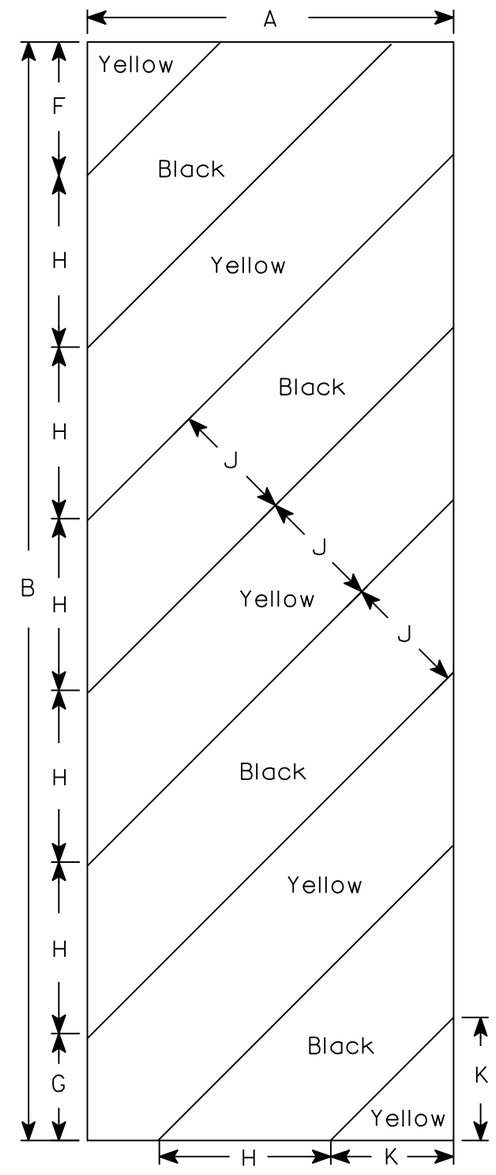

W5-52R

NOTES

1. Sign is Type II - Type H Reflective - reference WIS DOT Standard Specification for HIGHWAY and STRUCTURE CONSTRUCTION latest edition.
2. Color:
   Background - Yellow
   Message - Black
3. Corners may be square or rounded when base material is plywood but borders shall be rounded as shown. When base material is metal, the corners and borders shall be rounded.
4. Alternate colors of stripes as shown.

SIZE	A	B	C	D	E	F	G	H	I	J	K	L	M	N	O	P	Q	R	S	T	U	V	W	X	Y	Z	Area sq. ft.
1																											
2S	12	36				4 3/8	3 1/2	5 5/8	45°	4	4																3.0
2M	12	36				4 3/8	3 1/2	5 5/8	45°	4	4																3.0
3	18	54				6	5 1/2	8 1/2	45°	6	6 9/16																6.75
4																											
5																											

STANDARD SIGN
W5-52L & W5-52R

WISCONSIN DEPT OF TRANSPORTATION

APPROVED Matthew R Rauch
for State Traffic Engineer

DATE 3/22/11 PLATE NO. W5-52.8

PROJECT NO:	HWY:	COUNTY:		SHEET NO: 117	E

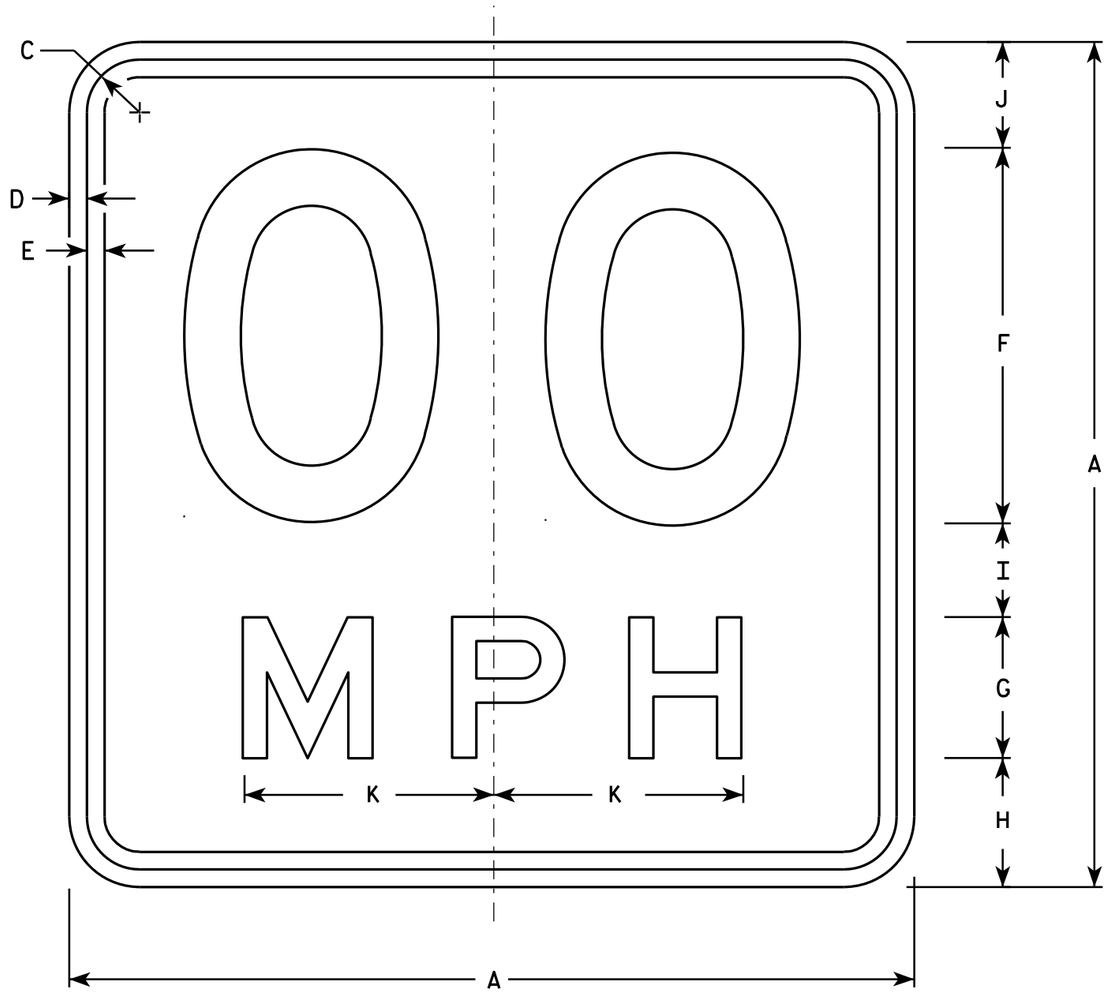

W13-1

* For 30" x 30" Warning Signs, use 18" x 18" W13-1 signs.
For 36" x 36" Warning Signs, use 24" x 24" W13-1 signs.

NOTES

1. Sign is Type II - Type H Reflective - reference WIS DOT Standard Specification for HIGHWAY and STRUCTURE CONSTRUCTION latest edition.
2. Color:
   Background - Yellow
   Message - Black
3. Message Series - See Note 6
4. Corners may be square or rounded when base material is plywood but borders shall be rounded as shown. When base material is metal, the corners and borders shall be rounded.
5. Substitute appropriate numerals and optically space about centerline to achieve proper balance.
6. Line 1 is Series D
   Line 2 is Series E

SIZE	A	B	C	D	E	F	G	H	I	J	K	L	M	N	O	P	Q	R	S	T	U	V	W	X	Y	Z	Area sq. ft.
1	18		1 1/8	3/8	3/8	8	3	2 3/4	2	2 1/4	5 3/8																2.25
* 2S	18		1 1/8	3/8	3/8	8	3	2 3/4	2	2 1/4	5 3/8																2.25
* 2M	18		1 1/8	3/8	3/8	8	3	2 3/4	2	2 1/4	5 3/8																2.25
3	24		1 1/8	3/8	1/2	10	4	4	2 3/4	3 1/4	6 5/8																4.00
4	36		1 5/8	5/8	3/4	16	6	5 1/2	4	4 1/2	10 5/8																9.00
5	36		1 5/8	5/8	3/4	16	6	5 1/2	4	4 1/2	10 5/8																9.00

STANDARD SIGN
W13-1

WISCONSIN DEPT OF TRANSPORTATION

APPROVED Matthew R Rauch
for State Traffic Engineer

DATE 3/16/11 PLATE NO. W13-1.15

PROJECT NO:	HWY:	COUNTY:		SHEET NO: 118	E

STATE PROJECT NUMBER
5648-00-72

BENCHMARKS		NAVD 88	
NO.	LOCATION	DESCRIPTION	ELEV.
28	STA. 152+81.79, 73.29' RT.	CHISELED X ON WINGWALL	973.10
31	STA. 152+75.52, 93.17' RT.	OLD REBAR STUB	970.21

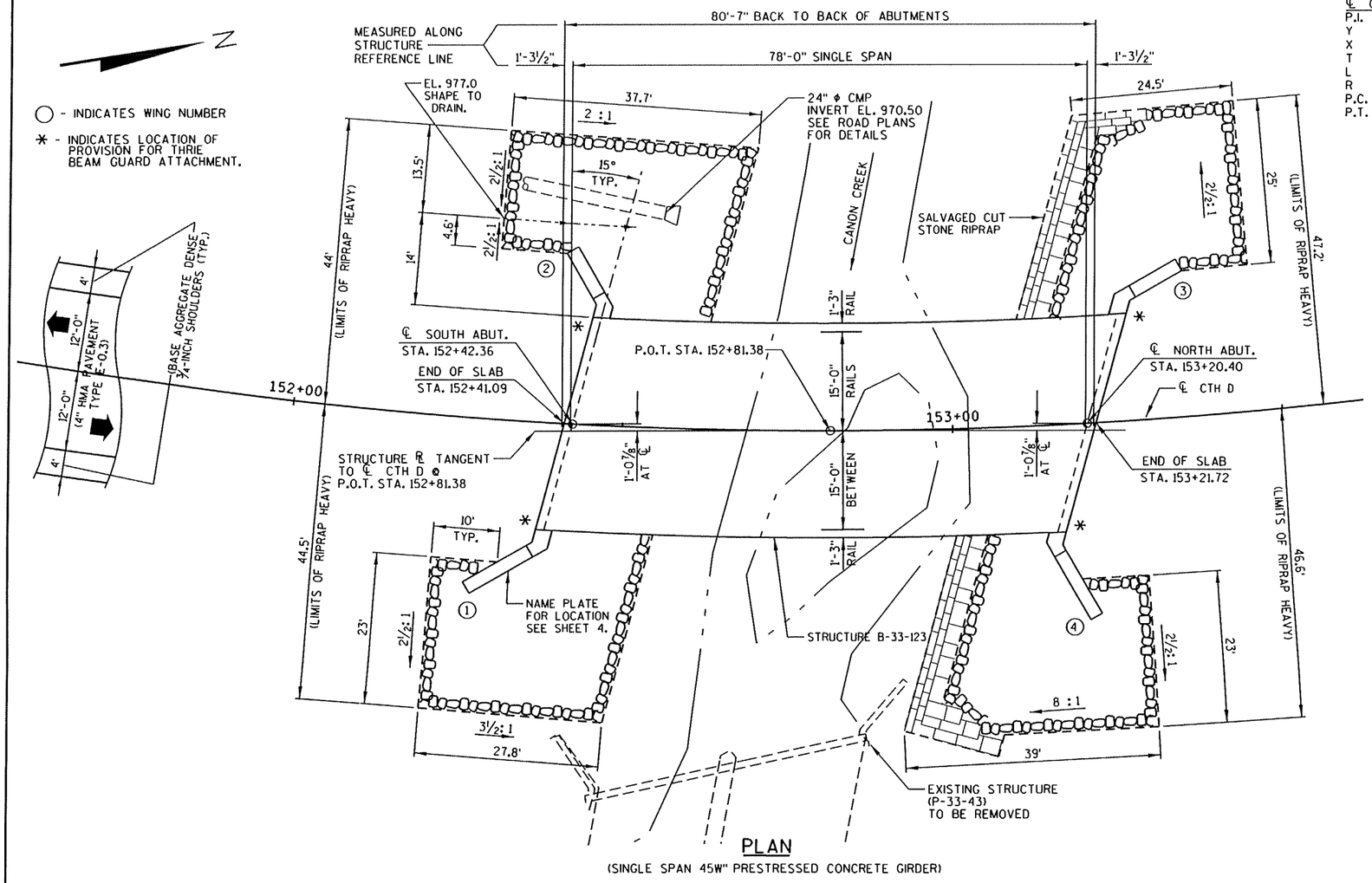

PLAN

(SINGLE SPAN 45W" PRESTRESSED CONCRETE GIRDER)

℄ CURVE DATA
P.I. = 151+02.86
Y = 213,334.37
X = 504,096.39
T = 476.01'
L = 838.66'
R = 710.00'
P.C. = 146+26.84
P.T. = 154+65.57

DESIGN DATA

LIVE LOAD:
DESIGN RATING : HL-93
INVENTORY RATING FACTOR : 1.21
OPERATIONAL RATING FACTOR : 1.57
MAXIMUM STANDARD PERMIT VEHICLE LOAD = 250 KIPS.
STRUCTURE IS DESIGNED FOR A FUTURE WEARING SURFACE OF 20 POUNDS PER SQUARE FOOT.

TRAFFIC DATA:
A.A.D.T. (2013) = 115
A.A.D.T. (2033) = 185

ULTIMATE DESIGN STRESSES:
CONCRETE MASONRY SLAB — f'c = 4,000 P.S.I. ALL OTHER — f'c = 3,500 P.S.I.
BAR STEEL REINFORCEMENT, GRADE 60 — fy = 60,000 P.S.I.
45W" PRESTRESSED GIRDERS, CONCRETE MASONRY — f'c = 8000 P.S.I.
STRANDS - 0.60" ϕ WITH ULTIMATE TENSILE STRENGTH OF 270,000 P.S.I.
PILING STEEL HP — fy = 50,000 P.S.I.

FOUNDATION DATA:
ABUTMENTS TO BE SUPPORTED ON PILING STEEL HP 10-INCH x 42 LB. SOUTH ABUTMENT PILING SHALL BE PREBORED A DEPTH OF 11'-6". NORTH ABUTMENT BODY PILING AND WING PILING TO BE DRIVEN TO REQUIRED DRIVING RESISTANCES OF 180 TONS PER PILE AND 60 TONS PER PILE RESPECTIVELY AS DETERMINED BY THE MODIFIED GATES DYNAMIC FORMULA. THE FACTORED AXIAL RESISTANCE OF PILES IN COMPRESSION USED FOR DESIGN IS THE REQUIRED DRIVING RESISTANCE MULTIPLIED BY A RESISTANCE FACTOR OF 0.5 USING MODIFIED GATES TO DETERMINE DRIVEN PILE CAPACITY.
ESTIMATED PILE LENGTHS ARE 15'-0" AT THE SOUTH ABUTMENT AND 23'-0" AT THE NORTH ABUTMENT BODY AND 20'-0" AT WINGS 3 & 4.

HYDRAULIC DATA:
100 YEAR FREQUENCY
DRAINAGE AREA — 3.4 SQ. MI.
Q_{100} — 1035 C.F.S.
VELOCITY — 6.93 FT./SEC.
WATERWAY AREA — 149 SQ. FT.
SCOUR CRITICAL CODE — 8
HIGH WATER $_{100}$ ELEVATION — 968.07 ±
Q_2 ELEVATION (200 C.F.S.) — 965.66 ±
ROADWAY OVERFLOW DESIGN FREQUENCY
OVERTOPPING FREQUENCY — > 100 YEARS

LIST OF DRAWINGS

1. GENERAL PLAN
2. CROSS SECTION, QUANTITIES & DETAILS
3. SUBSURFACE EXPLORATION
4. SOUTH ABUTMENT
5. SOUTH ABUTMENT DETAILS
6. NORTH ABUTMENT
7. NORTH ABUTMENT DETAILS
8. 45W" PRESTRESSED GIRDER DETAILS
9. SUPERSTRUCTURE
10. SUPERSTRUCTURE SECTIONS & DETAILS
11. STEEL DIAPHRAGM
12. RAILING TUBULAR TYPE M

DESIGN CONTACT:
DANIEL WAGNER
(608) 355-8952

BRIDGE OFFICE CONTACT:
WILLIAM DREHER
(608) 266-8489

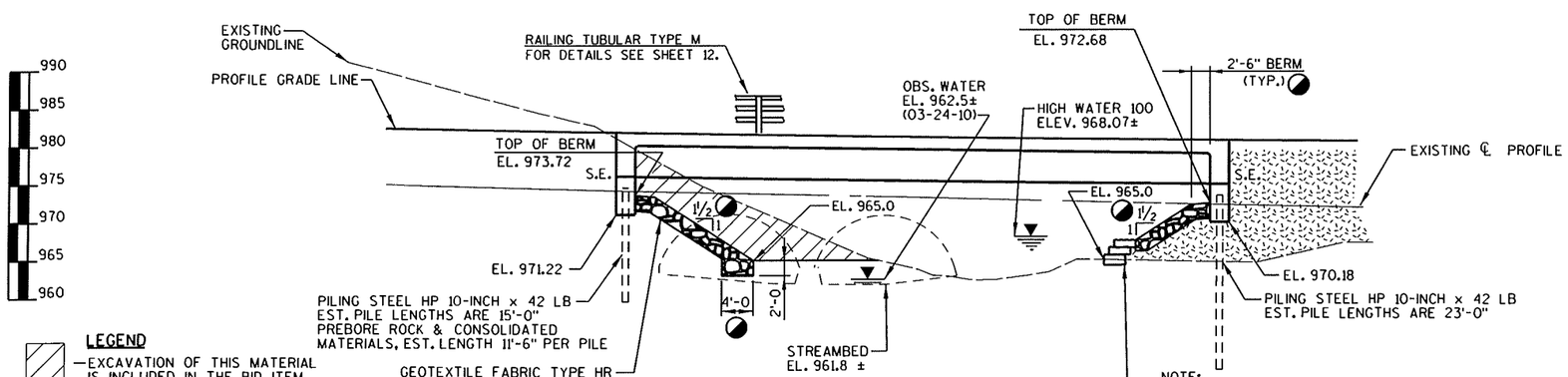

LEGEND
—EXCAVATION OF THIS MATERIAL IS INCLUDED IN THE BID ITEM "EXCAVATION FOR STRUCTURES BRIDGES (B-33-123)".
—DIMENSION GIVEN NORMAL TO THE ℄ OF ABUTMENTS.
—EARTH FILL FROM ROAD CONSTRUCTION.

NOTE:
NORTH ABUTMENT & ADJACENT RIPRAP HEAVY TO BE CONSTRUCTED ON FILL PLACED AS PART OF THE ROADWAY QUANTITIES.

ELEVATION

(NORMAL TO ℄ CTH D)

WISCONSIN
DANIEL H. WAGNER
E-19220
BARABOO, WI
PROFESSIONAL ENGINEER
Daniel H. Wagner
5-30-2012

NO.	DATE	REVISION	BY

MSA PROFESSIONAL SERVICES
TRANSPORTATION • MUNICIPAL DEVELOPMENT • ENVIRONMENTAL
1230 South Boulevard Baraboo, WI 53913
608-356-2771 1-800-362-4505 Fax: 608-356-2770

STATE OF WISCONSIN
DEPARTMENT OF TRANSPORTATION
ACCEPTED William C. Dreher KAR 10/01/12
CHIEF STRUCTURES DESIGN ENGINEER DATE

STRUCTURE B-33-123

CTH D OVER CANON CREEK

COUNTY	TOWN/~~CITY/VILLAGE~~
LAFAYETTE	FAYETTE

DESIGN SPEC. AASHTO LRFD DESIGN SPEC. 5th EDITION

DESIGNED BY	DESIGN CK'D.	DRAWN BY	PLANS CK'D.
DHW	LJM	RLR	DHW

GENERAL PLAN

SHEET 119 OF 12

FILE= 2398000_01.DGN
DATE= 5.30.2012

8

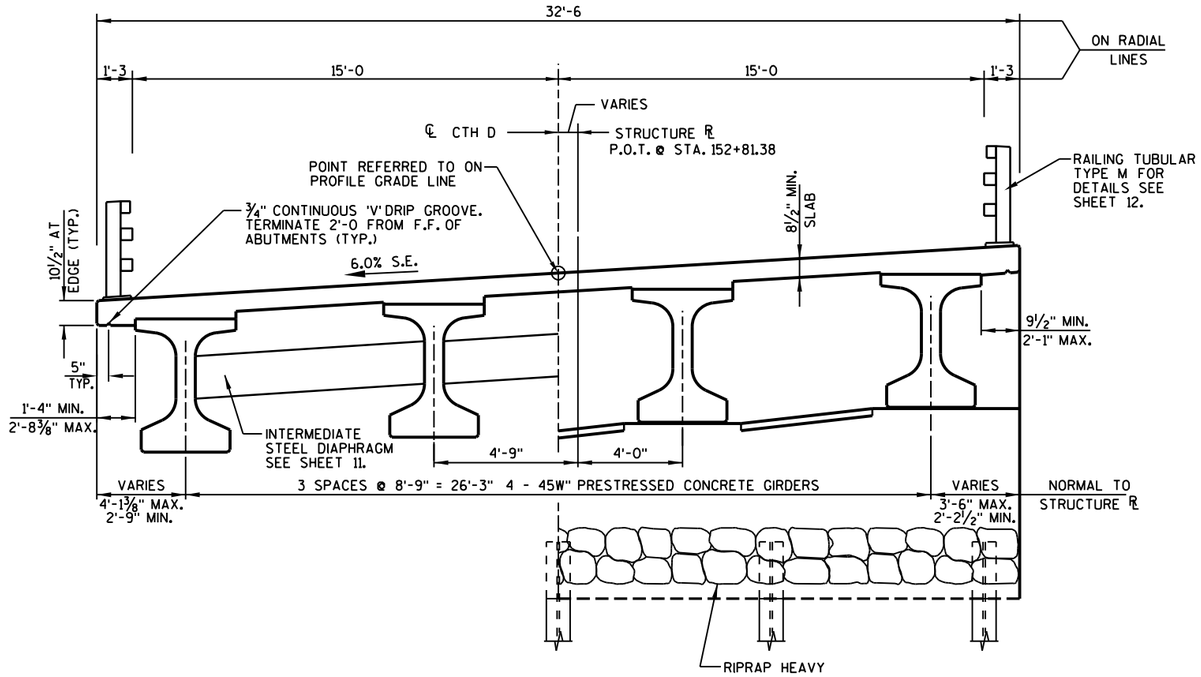

IN SPAN AT ABUTMENTS

CROSS SECTION THRU BRIDGE

(LOOKING NORTH)

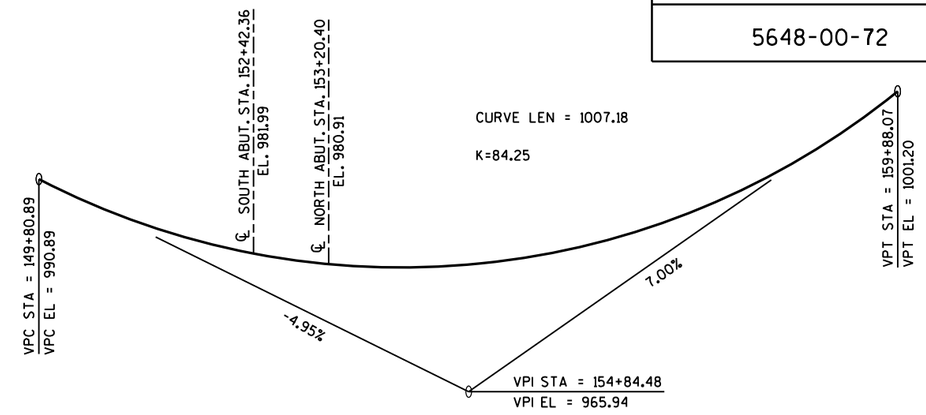

PROFILE GRADE LINE - CTH D

GENERAL NOTES

DRAWINGS SHALL NOT BE SCALED.

BAR STEEL REINFORCEMENT SHALL BE EMBEDDED 2" CLEAR UNLESS SHOWN OR NOTED OTHERWISE.

THE FIRST DIGIT OF A THREE DIGIT BAR MARK SIGNIFIES THE BAR SIZE.

THE SLOPE OF THE FILL IN FRONT OF THE ABUTMENTS SHALL BE COVERED WITH RIPRAP HEAVY AND GEOTEXTILE FABRIC TYPE HR TO THE LIMITS SHOWN ON SHEET 1 AND ON THE ABUTMENT SHEETS OR AS DIRECTED BY THE ENGINEER.

THE EXISTING GROUNDLINE SHALL BE THE UPPER LIMITS OF "EXCAVATION FOR STRUCTURES" FOR THE ABUTMENTS.

THE MINIMUM CONCRETE HAUNCH OVER THE EDGES OF PRESTRESSED GIRDERS SHALL BE 1¼" AND THE HAUNCH CONCRETE QUANTITY IS BASED ON AN AVERAGE HAUNCH DEPTH OF 4" WHICH IS THE MAXIMUM HAUNCH QUANTITY FOR WHICH THE CONTRACTOR WILL BE PAID.

THIS STRUCTURE WILL REPLACE THE EXISTING STRUCTURE, P-33-43, A 43.6' TWO SPAN CULVERT ARCH BRIDGE WITH FULL RETAINING CONCRETE ABUTMENTS.

AT THE ABUTMENTS ALL EXCAVATED VOLUME NOT OCCUPIED BY THE NEW STRUCTURE SHALL BE BACKFILLED WITH BACKFILL STRUCTURE. THE BACKFILL STRUCTURE ESTIMATED QUANTITIES ASSUMED ROAD APPROACH GRADING COMPLETE AND A 1½:1 EXCAVATION SLOPE AT THE ABUTMENTS.

DO NOT PLACE BACKFILL STRUCTURE ABOVE 3'-0" FROM THE BOTTOM OF ABUTMENT UNTIL THE SUPERSTRUCTURE IS IN PLACE.

ELEVATIONS SHOWN ON THIS PLAN ARE REFERENCED TO NAVD 88 BENCHMARK "WISDOT GEODETIC SURVEY CONTROL STATION" LOCATED 1.5 MILES SOUTHWEST OF THE EXISTING BRIDGE, ELEV. 1083.36.

APPLY PROTECTIVE SURFACE TREATMENT TO THE TOP AND EDGES OF SLAB, TO THE OUTSIDE 1'-0" OF THE UNDERSIDE OF SLAB OVERHANG, AND TO THE TOP LEVEL SURFACE OF THE ABUTMENT WINGWALLS.

TOTAL ESTIMATED QUANTITIES

ITEM NUMBER	BID ITEM	UNIT	SOUTH ABUT.	NORTH ABUT.	SUPER.	TOTAL
203.0600.S	REMOVING OLD STRUCTURE OVER WATERWAY WITH MINIMAL DEBRIS STATION 152+65, 64.4' RT	LS	-	-	-	1
206.1000.01	EXCAVATION FOR STRUCTURE BRIDGES (B-33-123)	LS	-	-	-	1
210.0100	BACKFILL STRUCTURE	CY	265	265	-	530
502.0100	CONCRETE MASONRY BRIDGES	CY	45	44	112	201
502.3200	PROTECTIVE SURFACE TREATMENT	SY	-	-	330	330
503.0146	PRESTRESSED GIRDER TYPE I 45W-INCH	LF	-	-	316.0	316
505.0405	BAR STEEL REINFORCEMENT HS BRIDGES	LB	2480	2560	-	5040
505.0605	BAR STEEL REINFORCEMENT HS COATED BRIDGES	LB	1935	1925	18130	21990
506.2605	BEARING PADS ELASTOMERIC NON-LAMINATED	EACH	-	-	8	8
506.4000.01	STEEL DIAPHRAGMS (B-33-123)	EACH	-	-	3	3
513.4060.01	RAILING TUBULAR TYPE M (B-33-123)	LS	-	-	-	1
516.0500	RUBBERIZED MEMBRANE WATERPROOFING	SY	7.5	7.5	-	15
550.0020	PRE-BORING ROCK OR CONSOLIDATED MATERIALS	LF	69	-	-	69
550.1100	PILING STEEL HP 10-INCH X 42 LB	LF	90	168	-	258
606.0300	RIPRAP HEAVY	CY	185	165	-	350
612.0406	PIPE UNDERDRAIN WRAPPED 6-INCH	LF	70	70	-	140
645.0120	GEOTEXTILE FABRIC TYPE HR	SY	350	360	-	710
SPV.0090.01	SALVAGED CUT STONE RIPRAP	LF	-	320	-	320
	NON-BID ITEMS					
	CORK FILLER	SIZE				¾"
	PREFORMED FILLER	SIZE				½" & ¾"

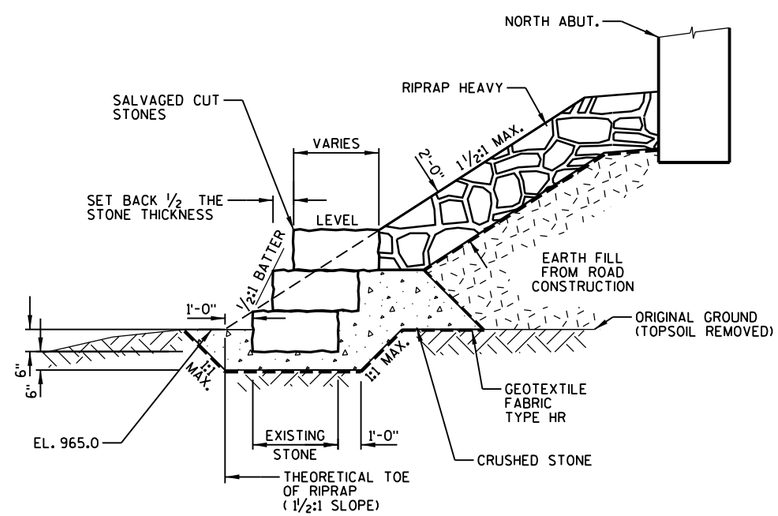

SALVAGED CUT STONE RIPRAP

NO.	DATE	REVISION	BY

STATE OF WISCONSIN
DEPARTMENT OF TRANSPORTATION
STRUCTURES DESIGN SECTION

STRUCTURE B-33-123

CONST. SPEC. WI "13" | DRAWN BY RLR | PLANS CK'D. DHW

CROSS SECTION, QUANTITIES & DETAILS

SHEET 2 OF 12
120

8

8

FILE= 2398000_02.DGN
DATE= 5/29/2012

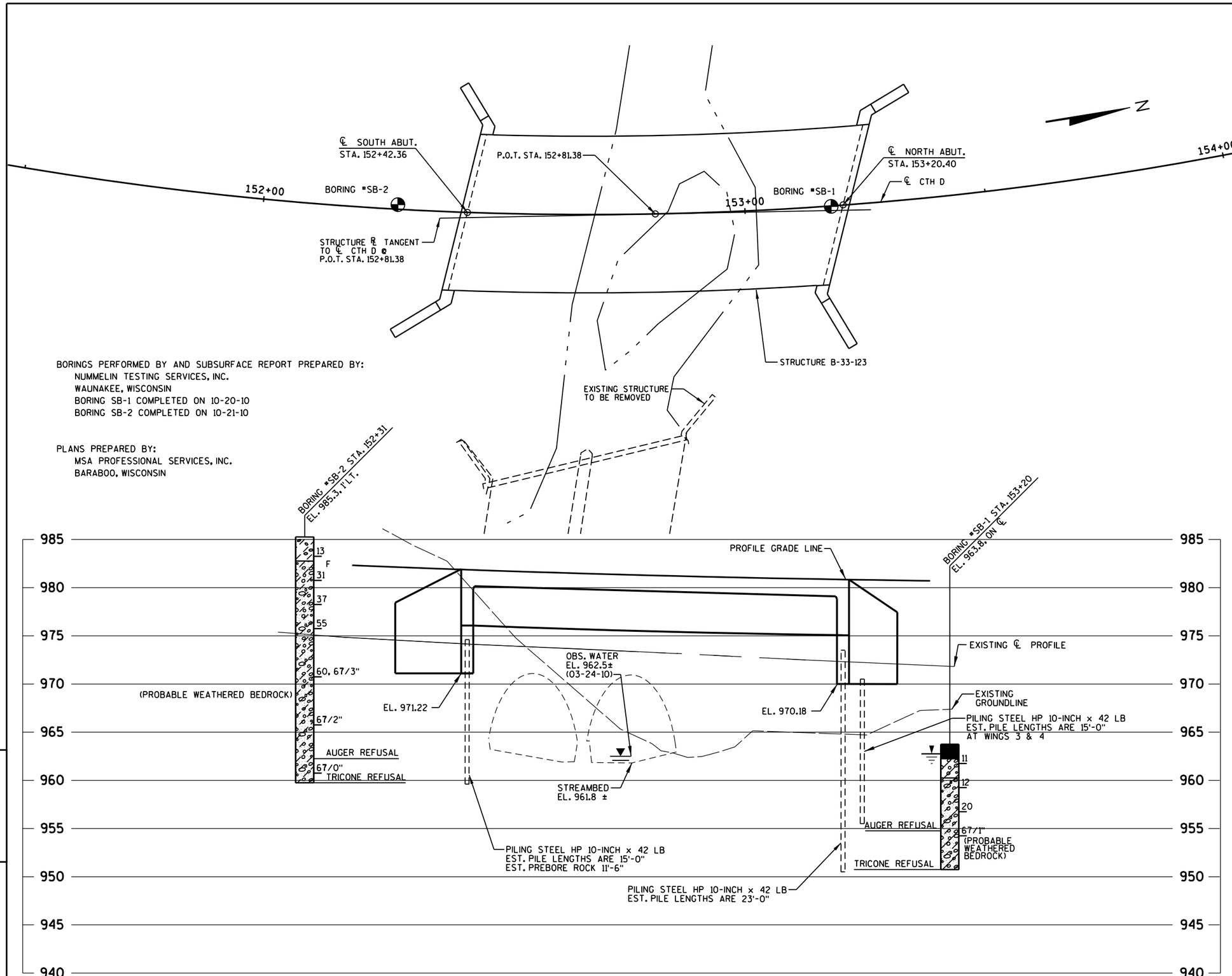

STATE PROJECT NUMBER

5648-00-72

ABBREVIATIONS

F — FINE M — MEDIUM C — COARSE
WS — WEATHERED SO — SOUND

MATERIAL SYMBOLS

TOPSOIL, SILT, SANDSTONE, SAND, PEAT, LIMESTONE, GRAVEL, CLAY, IGNEOUS ROCK

LEGEND OF PROBING

95/6=95 BLOWS FOR 6" PENETRATION PROBING TAKEN WITH A 350# WT. FALLING 18" ON A 2" O.D. POINT.

- PROBING NO.
- STA.
- ELEVATION
- 7 AVERAGE BLOWS PER FOOT
- REFUSAL 95/6

LEGEND OF BORING

- BORING NO.
- ELEV.
- STA.
- UNCONFINED STRENGTH → 7.7 7
- BLOWS PER FT. USING 140# WT. FALLING 30"
- WASH SAMPLE
- SHELBY TUBE — S.T.
- GROUND WATER ELEVATION
- NO GROUND WATER OBSERVED ABOVE THIS ELEVATION
- SANDY GRAVEL
- F. BOULDERS OR COBBLES
- SAND
- SILTY CLAY
- SO LIMESTONE

UNLESS OTHERWISE SPECIFIED, THE BLOWS PER FOOT AT THE LOCATIONS INDICATED ARE BASED ON DRIVING A 2" O.D. X 1.4" I.D. SPLIT SPOON SAMPLER WITH A 140# HAMMER HAVING A FREE FALL OF 30". THE BLOW COUNT IS TAKEN IN UNDISTURBED SOIL IMMEDIATELY BELOW A CASED OR OPEN HOLE ELIMINATING SIDE FRICTION ON THE DRIVE PIPE.

SUBSURFACE EXPLORATION FOR FOUNDATION DESIGN AND BIDDERS INFORMATION

TO OBTAIN RELATIVE DATA CONCERNING THE CHARACTER OF MATERIAL IN AND UPON WHICH THE FOUNDATION MIGHT BE BUILT, BORINGS AND/OR SOUNDINGS WERE MADE AT POINTS APPROXIMATELY AS INDICATED ON THIS DRAWING. THE DATA PRESENTED HEREIN REPRESENTS THE FINDINGS OF THE SUBSURFACE EXPLORATIONS MADE. HOWEVER, BECAUSE THE DEPTHS INVESTIGATED ARE LIMITED AND THE AREA OF THE BORINGS AND/OR SOUNDINGS IS VERY SMALL IN RELATION TO THE ENTIRE AREA, THE WISCONSIN DEPARTMENT OF TRANSPORTATION DOES NOT WARRANT CONDITIONS BELOW THE DEPTHS INVESTIGATED OR THAT THE CLASSIFICATION OF MATERIAL ENCOUNTERED IN THESE INVESTIGATIONS IS NECESSARILY TYPICAL OF THE ENTIRE SITE.

NO.	DATE	REVISION	BY

STATE OF WISCONSIN
DEPARTMENT OF TRANSPORTATION
STRUCTURES DESIGN SECTION

STRUCTURE B-33-123

CONST. SPEC.	WI "13"	DRAWN BY	RLR	PLANS CK'D.	DHW

SUBSURFACE EXPLORATION

SHEET 8 OF 12
121

FILE= 2398000_03.DGN
DATE= 5/24/2012

8

STATE PROJECT NUMBER

5648-00-72

NOTES - ELEVATIONS ARE GIVEN AT THE ℄ OF ABUTMENT.
FOR WING ELEVATIONS AND DETAILS SEE SHEET 5.
BEARING SEATS TO BE LEVEL.

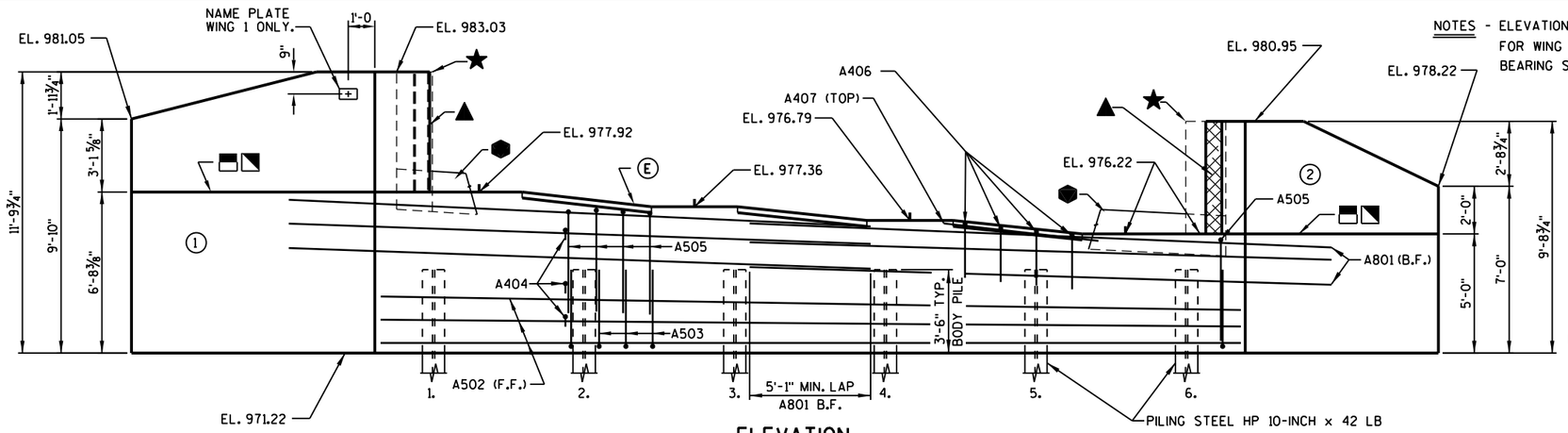

NOTE - WING PILES NOT REQ'D. AT WINGS 1 & 2. EXCAVATE TO FIRM SUBSOILS.
FOUND BASES OF WINGS ON FIRMLY COMPACTED BASE MATERIAL.

ELEVATION
(LOOKING SOUTH)

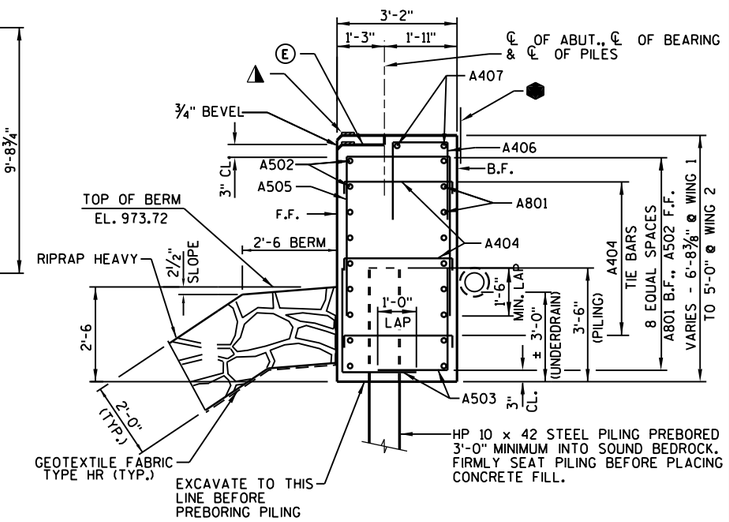

TYPICAL SECTION THRU ABUTMENT

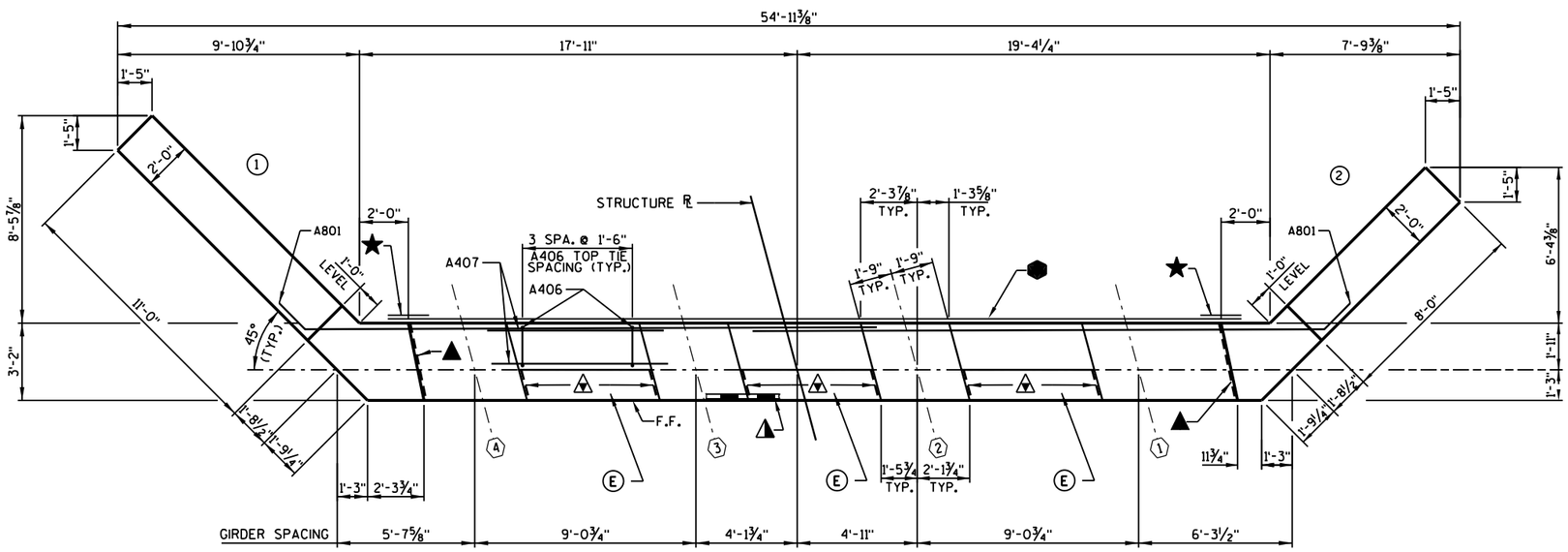

PLAN

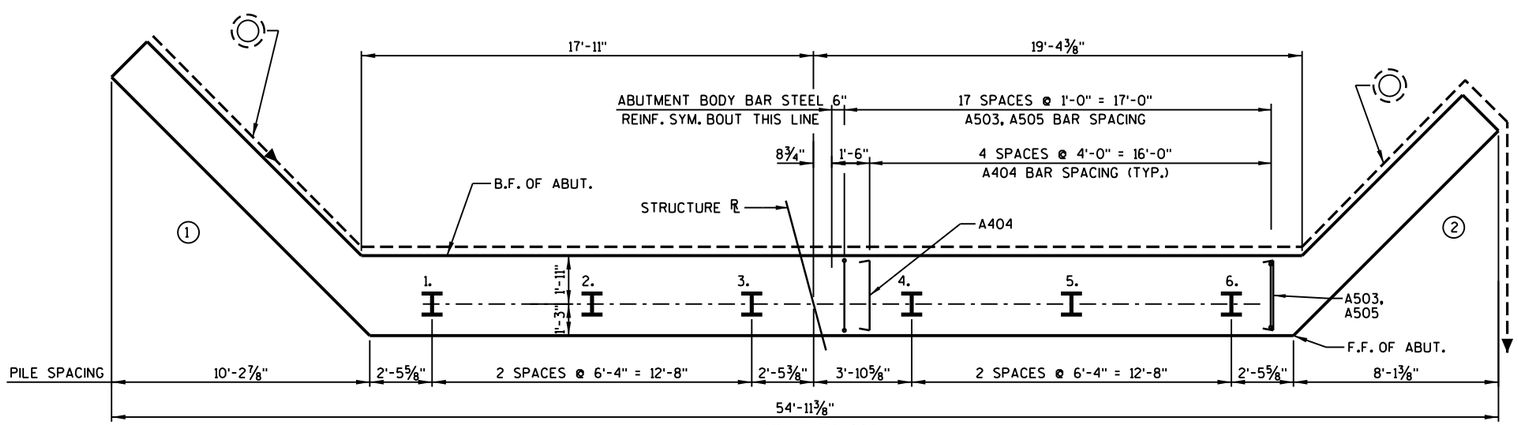

PILE PLAN

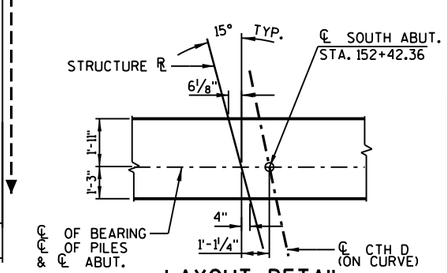

LEGEND

◯ — INDICATES WING NUMBER

F.F. — FRONT FACE B.F. — BACK FACE CL. — CLEAR

▲ — ½" FILLER EXTEND AS SHOWN. SEAL ALL EXPOSED HORIZ. & VERT. SURFACES OF FILLER WITH NON-STAINING GRAY, NON-BITUMINOUS JOINT SEALER (1" DEEP & HOLD ⅛" BELOW SURFACE OF CONCRETE).

◭ — 4" x ¾" FILLER, EXTEND FULL LENGTH OF ABUTMENT BETWEEN EDGES OF SLAB.

★ — VERTICAL 18" WIDE RUBBERIZED MEMBRANE WATERPROOFING. EXTEND FROM 9" BELOW BRIDGE SEAT TO TOP OF WINGS.

⬢ — HORIZONTAL 18" WIDE RUBBERIZED MEMBRANE WATERPROOFING. EXTEND BETWEEN WINGS.

▬ — OPTIONAL KEYED CONST. JOINT ON WING FORMED BY BEVELED 2 x 6.

◪ — ¾" "V" GROOVE ON FRONT FACE OF WING WALL, REQUIRED ONLY WHERE CONST. JOINT IS USED.

◯ — PIPE UNDERDRAIN WRAPPED 6-INCH. EXTEND THRU GEOTEXTILE FABRIC AT FACE OF RIPRAP HEAVY. SLOPE 0.5% MIN. TO SUITABLE DRAINAGE. PROVIDE RODENT PROTECTION AT ENDS OF PIPE.

Ⓔ — SEMI-EXPANSION STEP. CONSTRUCT 3" DEEPER THAN ABUTMENT BACKWALL. STEEL TROWEL TOP SURFACE OF ABUTMENT. PLACE MULTIPLE LAYERS OF POLYETHYLENE SHEETS OVER ENTIRE ABUTMENT TOP BEFORE PLACING SUPERSTRUCTURE. TOTAL THICKNESS OF SHEETS SHALL BE AT LEAST 0.03 INCHES.

⊽ — ¾" CORK FILLER (SIDE VERTICAL FACES ONLY).

NO.	DATE	REVISION	BY

STATE OF WISCONSIN
DEPARTMENT OF TRANSPORTATION
STRUCTURES DESIGN SECTION

STRUCTURE B-33-123

CONST. SPEC. WI "13" | DRAWN BY RLR | PLANS CK'D. DHW

SOUTH ABUTMENT

SHEET 4 OF 12
122

FILE= 2398000_04_s_abut.dgn
DATE=5/25/2012

8

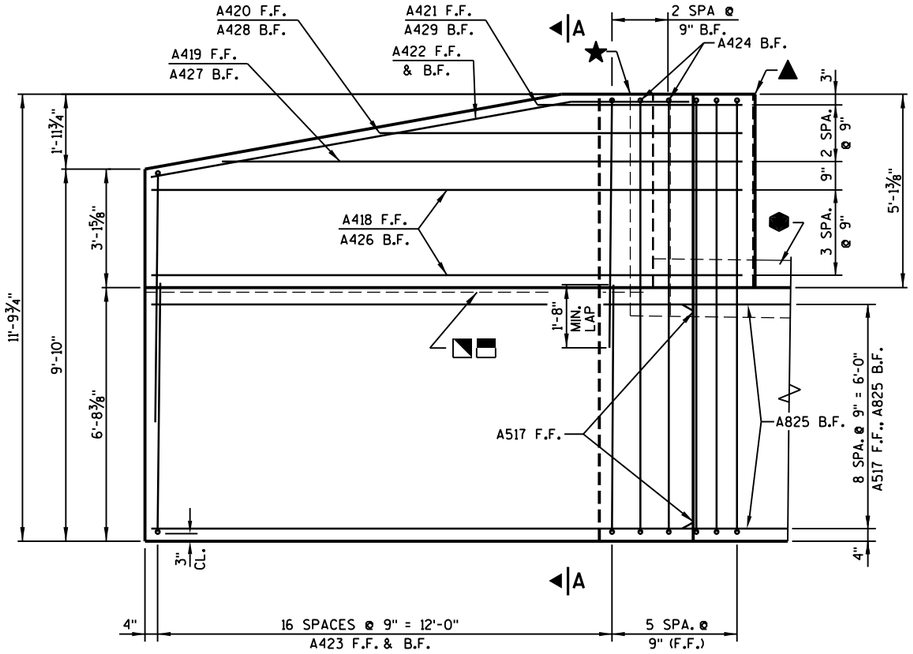

ELEVATION - WING 1
(LOOKING AT F.F. OF WING)

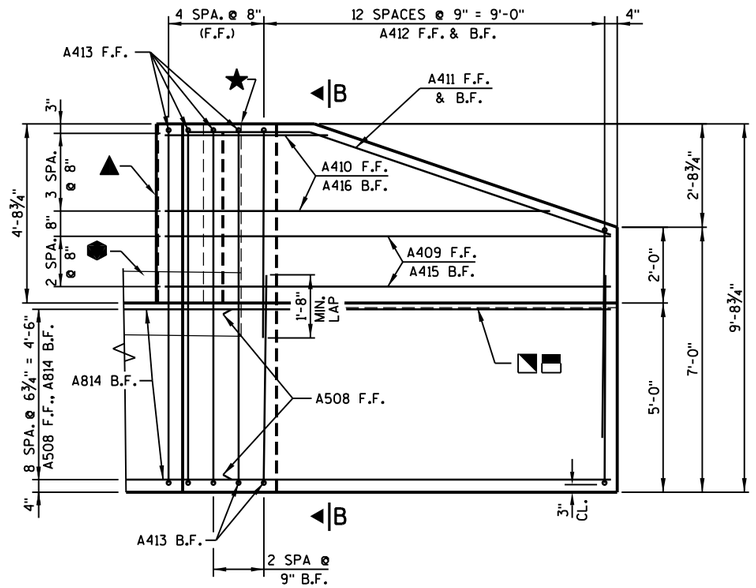

ELEVATION - WING 2
(LOOKING AT F.F. OF WING)

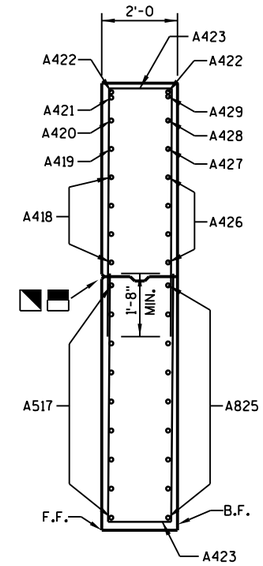

SECTION A-A THRU WING 1

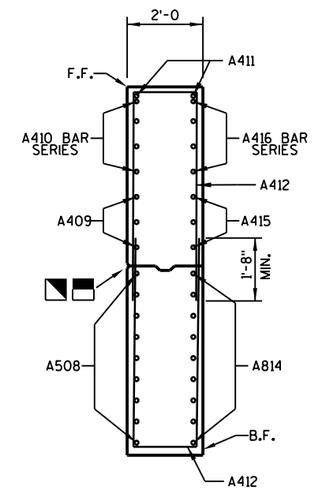

SECTION B-B THRU WING 2

COATED 1935 LBS.
UNCOATED 2480 LBS.

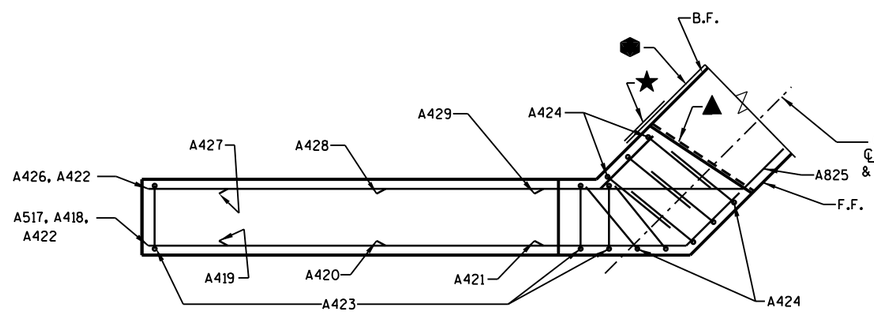

PLAN - WING 1

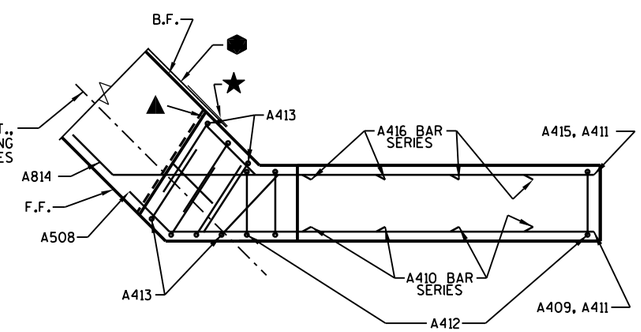

PLAN - WING 2

BILL OF BARS

MARK	NUMBER REQUIRED COATED	NUMBER REQUIRED UNCOATED	LENGTH	BENT	BAR SERIES	LOCATION
A801	-	18	24-10	X		ABUT. BODY - B.F. - TRANS.
A502	-	9	36-6			ABUT. BODY - F.F. - TRANS.
A503	-	72	5-2	X		ABUT. BODY - BOTTOM - TIE - VERT.
A404	-	30	3-5	X		ABUT. BODY - TIE - HORIZ.
A505	-	36	11-4	X		ABUT. BODY - TOP - TIE - VERT.
A406	-	12	4-5	X		ABUT. BODY - BACKWALL TOP - TIE - VERT.
A407	-	6	7-3			ABUT. BODY - BACKWALL TOP - HORIZ.
A508	9	-	12-8	X		WING 2 - BOTTOM - F.F. - HORIZ.
A409	3	-	11-11	X		WING 2 - TOP - F.F. - HORIZ.
A410	4	-	7-4	X	Ⓢ	WING 2 - TOP - F.F. - HORIZ.
A411	2	-	11-6	X		WING 2 - TOP - F.F. & B.F. - HORIZ.
A412	26	-	12-6	X		WING 2 - STIRRUP - F.F. & B.F. - VERT.
A413	7	-	13-3	X		WING 2 - STIRRUP - F.F. & B.F. - VERT.
A814	9	-	14-1	X		WING 2 - BOTTOM - B.F. - HORIZ.
A415	3	-	10-9	X		WING 2 - TOP - B.F. - HORIZ.
A416	4	-	6-2	X	Ⓢ	WING 2 - TOP - B.F. - HORIZ.
A517	9	-	15-8	X		WING 1 - BOTTOM - F.F. - HORIZ.
A418	4	-	16-1	X		WING 1 - TOP - F.F. - HORIZ.
A419	1	-	14-3	X		WING 1 - TOP - F.F. - HORIZ.
A420	1	-	10-1	X		WING 1 - TOP - F.F. - HORIZ.
A421	1	-	5-11	X		WING 1 - TOP - F.F. - HORIZ.
A422	2	-	14-4	X		WING 1 - TOP - F.F. & B.F. - HORIZ.
A423	34	-	14-6	X		WING 1 - STIRRUP - F.F. & B.F. - VERT.
A424	8	-	15-5	X		WING 1 - STIRRUP - F.F. & B.F. - VERT.
A825	9	-	17-1	X		WING 1 - BOTTOM - B.F. - HORIZ.
A426	4	-	13-10	X		WING 1 - TOP - B.F. - HORIZ.
A427	1	-	12-0	X		WING 1 - TOP - B.F. - HORIZ.
A428	1	-	7-9	X		WING 1 - TOP - B.F. - HORIZ.
A429	1	-	3-8	X		WING 1 - TOP - B.F. - HORIZ.

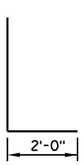

A503

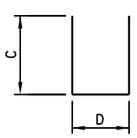

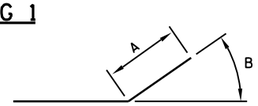

MARK	C	D
A404	4½"	2'-10"
A505	4'-4"	2'-10
A406	1'-6"	1'-7"
A412	5'-6"	1'-8"
A413	2'-1"	9'-3"
A423	6'-6"	1'-8"
A424	2'-1"	11'-5"

MARK	A	B
A801 A508 A814 A517 A825	1'-6"	45°
A409 A410	9"	45°
A411	3'-2"	19°
A415 A416	1'-10"	45°
A418 THRU A421 A426 THRU A429	1'-11"	45°
A422	3'-1"	10°

SEE LEGEND ON SHEET 4 FOR DESCRIPTION OF ★ ⬢ ◥ ▬ ▲

BAR MARK	NO. REQ'D.	LENGTH
A410	1 SERIES OF 4	4'-5" TO 10'-3"
A416	1 SERIES OF 4	3'-3" TO 9'-1"

BAR SERIES TABLE

DIMENSIONS IN BENDING DETAILS ARE OUT TO OUT OF BAR.

Ⓢ - LENGTH SHOWN FOR BAR IS AN AVERAGE AND SHOULD ONLY BE USED FOR BAR WEIGHT CALCULATIONS. SEE BAR SERIES TABLE FOR ACTUAL LENGTHS.

BENT BARS IF USED IN BAR SERIES TABLE SHALL BE BENT AFTER CUTTING.

NO.	DATE	REVISION	BY

STATE OF WISCONSIN
DEPARTMENT OF TRANSPORTATION
STRUCTURES DESIGN SECTION

STRUCTURE B-33-123

CONST. SPEC. WI "13" | DRAWN BY RLR | PLANS CK'D. DHW

SOUTH ABUTMENT DETAILS

FILE= 2398000_04_s_ab_det.dgn
DATE= 5/24/2012

2398000_05_s_ab_det.dgn 5/24/2012 3:44:14 PM frabska

NOTES - ELEVATIONS ARE GIVEN AT THE ℄ OF ABUTMENT.
FOR WING ELEVATIONS AND DETAILS SEE SHEET 7.
BEARING SEATS TO BE LEVEL.

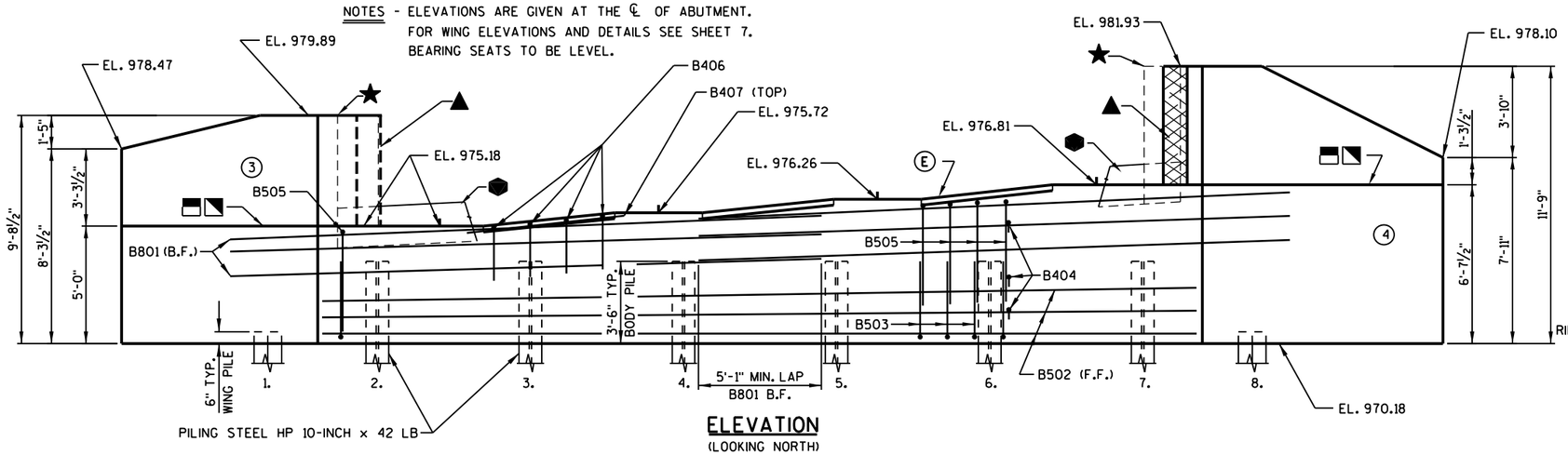

ELEVATION
(LOOKING NORTH)

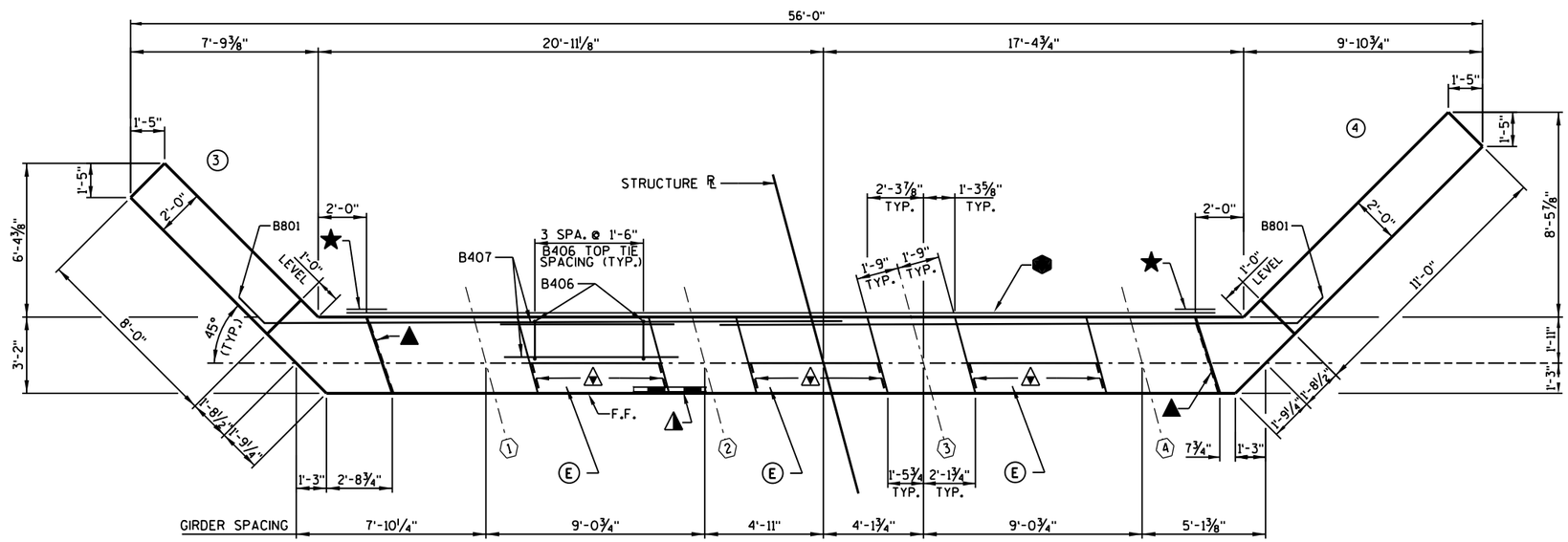

PLAN

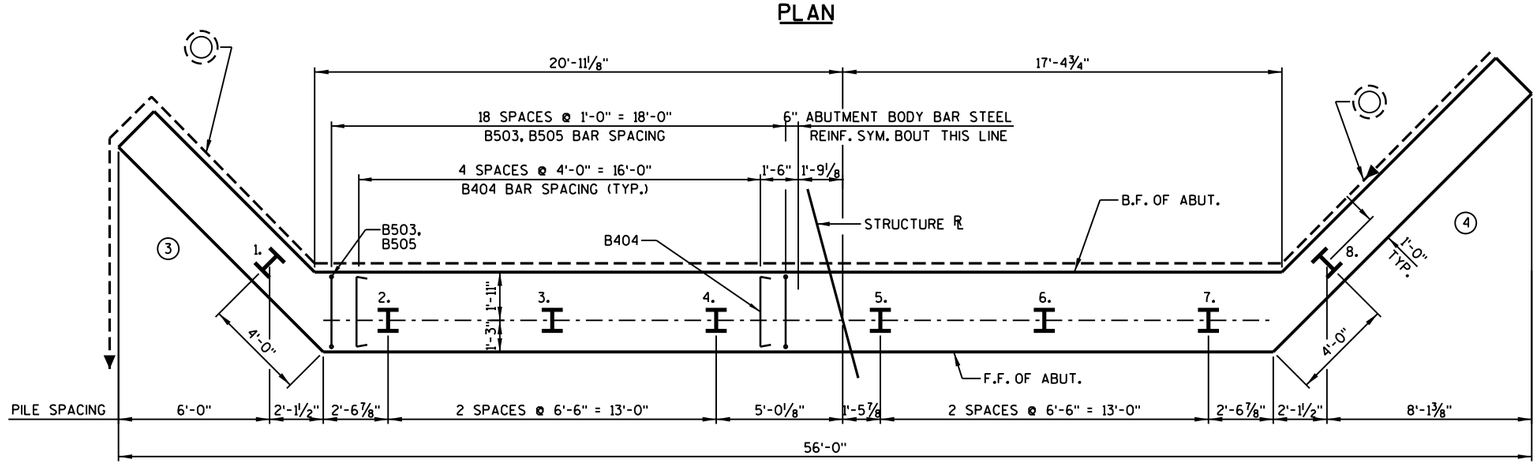

PILE PLAN

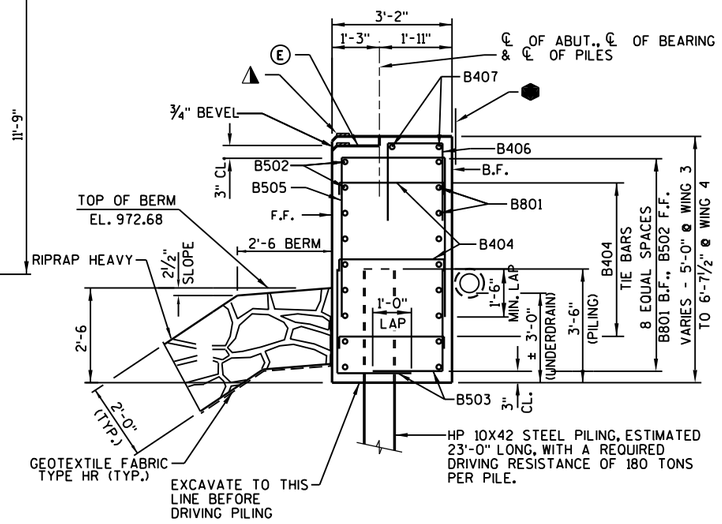

TYPICAL SECTION THRU ABUTMENT

LEGEND

- ◯ — INDICATES WING NUMBER
- F.F. — FRONT FACE B.F. — BACK FACE CL. — CLEAR
- ▲ — ½" FILLER EXTEND AS SHOWN. SEAL ALL EXPOSED HORIZ. & VERT. SURFACES OF FILLER WITH NON-STAINING GRAY, NON-BITUMINOUS JOINT SEALER (1" DEEP & HOLD ⅛" BELOW SURFACE OF CONCRETE).
- ◭ — 4" x ¾" FILLER, EXTEND FULL LENGTH OF ABUTMENT BETWEEN EDGES OF SLAB.
- ★ — VERTICAL 18" WIDE RUBBERIZED MEMBRANE WATERPROOFING. EXTEND FROM 9" BELOW BRIDGE SEAT TO TOP OF WINGS.
- ⬢ — HORIZONTAL 18" WIDE RUBBERIZED MEMBRANE WATERPROOFING. EXTEND BETWEEN WINGS.
- ⬒ — OPTIONAL KEYED CONST. JOINT ON WING FORMED BY BEVELED 2 x 6.
- ◥ — ¾" "V" GROOVE ON FRONT FACE OF WING WALL, REQUIRED ONLY WHERE CONST. JOINT IS USED.
- ◯ — PIPE UNDERDRAIN WRAPPED 6-INCH. EXTEND THRU GEOTEXTILE FABRIC AT FACE OF RIPRAP HEAVY. SLOPE 0.5% MIN. TO SUITABLE DRAINAGE. PROVIDE RODENT PROTECTION AT ENDS OF PIPE.
- (E) — SEMI-EXPANSION STEP, CONSTRUCT 3" DEEPER THAN ABUTMENT BACKWALL. STEEL TROWEL TOP SURFACE OF ABUTMENT. PLACE MULTIPLE LAYERS OF POLYETHYLENE SHEETS OVER ENTIRE ABUTMENT TOP BEFORE PLACING SUPERSTRUCTURE. TOTAL THICKNESS OF SHEETS SHALL BE AT LEAST 0.03 INCHES.
- ▽ — ¾" CORK FILLER (SIDE VERTICAL FACES ONLY).

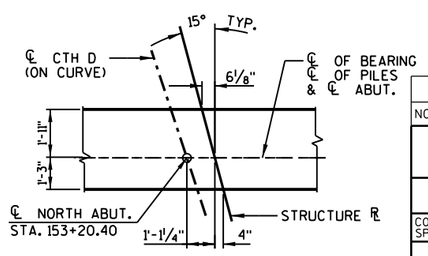

LAYOUT DETAIL

NO.	DATE	REVISION	BY

STATE OF WISCONSIN
DEPARTMENT OF TRANSPORTATION
STRUCTURES DESIGN SECTION

STRUCTURE B-33-123

CONST. SPEC.	WI "13"	DRAWN BY	RLR	PLANS CK'D.	DHW

NORTH ABUTMENT

SHEET 6 OF 12

STATE PROJECT NUMBER
5648-00-72

8

FILE= 2398000_06_n_abut.dgn
DATE= 5/25/2012

2398000_06_n_abut.dgn 5/25/2012 3:12:22 PM frabska

STATE PROJECT NUMBER

5648-00-72

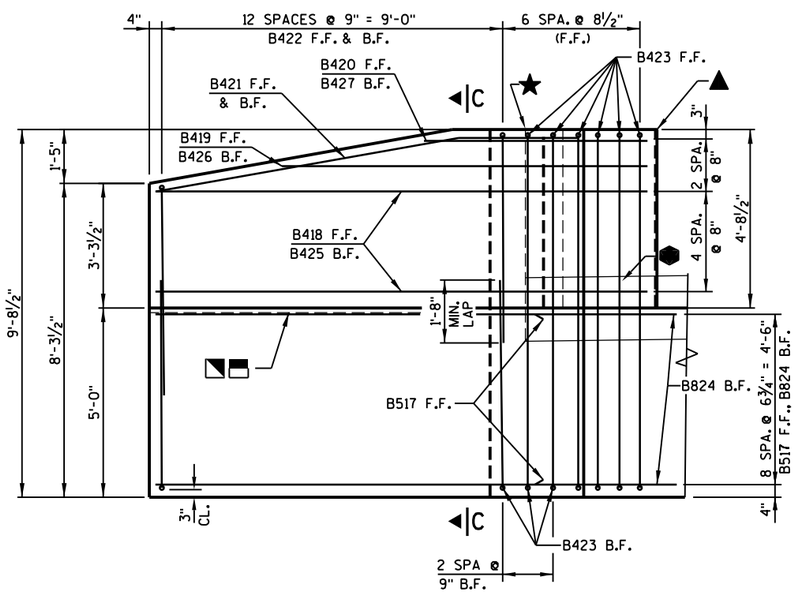

ELEVATION - WING 3
(LOOKING AT F.F. OF WING)

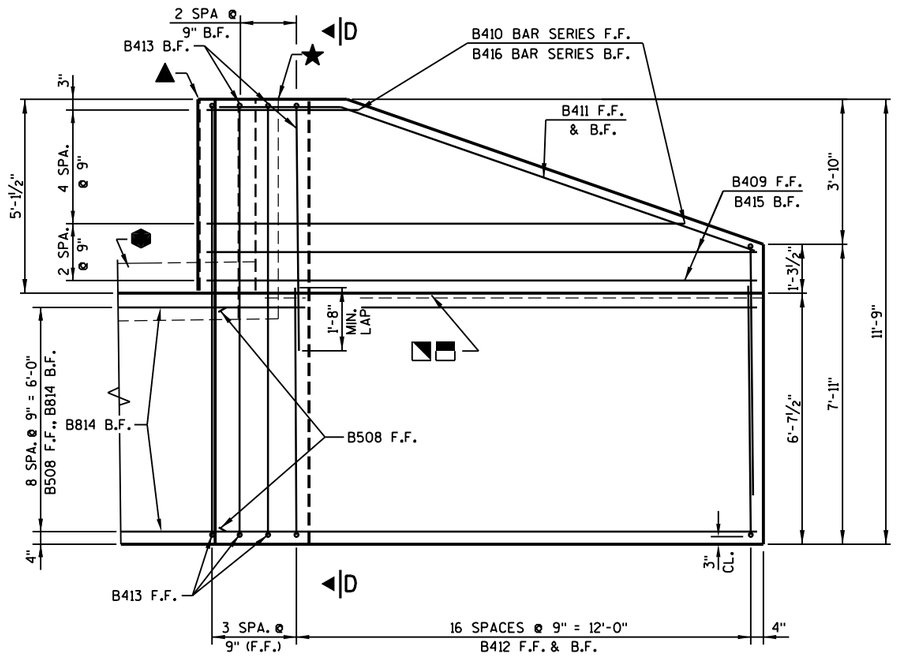

ELEVATION - WING 4
(LOOKING AT F.F. OF WING)

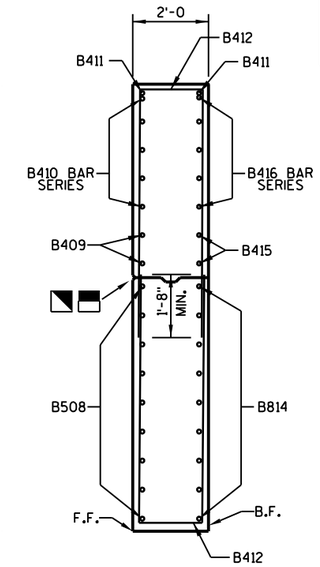

SECTION D-D THRU WING 4

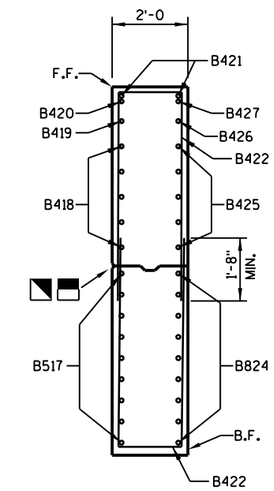

SECTION C-C THRU WING 3

COATED 1925 LBS.
UNCOATED 2560 LBS.

BILL OF BARS

MARK	NUMBER REQUIRED COATED	NUMBER REQUIRED UNCOATED	LENGTH	BENT	BAR SERIES	LOCATION
B801	-	18	25-4	X		ABUT. BODY - B.F. - TRANS.
B502	-	9	37-7			ABUT. BODY - F.F. - TRANS.
B503	-	76	5-2	X		ABUT. BODY - BOTTOM - TIE - VERT.
B404	-	30	3-5	X		ABUT. BODY - TIE - HORIZ.
B505	-	38	11-4	X		ABUT. BODY - TOP - TIE - VERT.
B406	-	12	4-5	X		ABUT. BODY - BACKWALL TOP - TIE - VERT.
B407	-	6	7-3			ABUT. BODY - BACKWALL TOP - HORIZ.
B508	9	-	15-8	X		WING 4 - BOTTOM - F.F. - HORIZ.
B409	2	-	14-7	X		WING 4 - TOP - F.F. - HORIZ.
B410	5	-	8-4	X	Ⓢ	WING 4 - TOP - F.F. - HORIZ.
B411	2	-	14-9	X		WING 4 - TOP - F.F. & B.F. - HORIZ.
B412	34	-	14-6	X		WING 4 - STIRRUP - F.F. & B.F. - VERT.
B413	6	-	15-4	X		WING 4 - STIRRUP - F.F. & B.F. - VERT.
B814	9	-	17-1	X		WING 4 - BOTTOM - B.F. - HORIZ.
B415	2	-	13-8	X		WING 4 - TOP - B.F. - HORIZ.
B416	5	-	7-6	X	Ⓢ	WING 4 - TOP - B.F. - HORIZ.
B517	9	-	12-7	X		WING 3 - BOTTOM - F.F. - HORIZ.
B418	5	-	13-5	X		WING 3 - TOP - F.F. - HORIZ.
B419	1	-	10-1	X		WING 3 - TOP - F.F. - HORIZ.
B420	1	-	6-5	X		WING 3 - TOP - F.F. - HORIZ.
B421	2	-	11-3	X		WING 3 - TOP - F.F. & B.F. - HORIZ.
B422	26	-	12-6	X		WING 3 - STIRRUP - F.F. & B.F. - VERT.
B423	9	-	13-3	X		WING 3 - STIRRUP - F.F. & B.F. - VERT.
B824	9	-	14-1	X		WING 3 - BOTTOM - B.F. - HORIZ.
B425	5	-	10-10	X		WING 3 - TOP - B.F. - HORIZ.
B426	1	-	7-6	X		WING 3 - TOP - B.F. - HORIZ.
B427	1	-	3-9	X		WING 3 - TOP - B.F. - HORIZ.

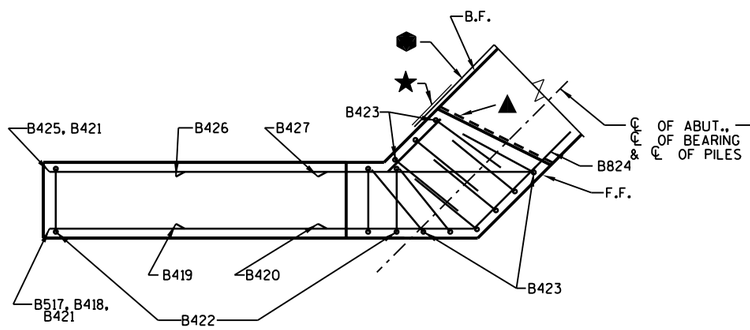

PLAN - WING 3

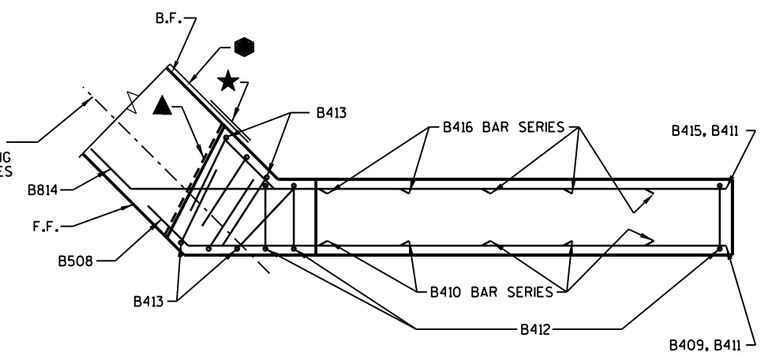

PLAN - WING 4

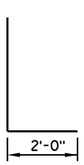

B503

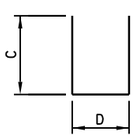

MARK	C	D
B404	4½"	2'-10"
B505	4'-4"	2'-10
B406	1'-6"	1'-7"
B412	6'-6"	1'-8"
B413	2'-1"	11'-4
B422	5'-6"	1'-8"
B423	2'-1"	9'-3"

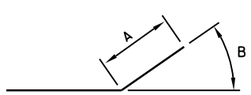

MARK	A	B
B801 B508 B814 B517 B824	1'-6"	45°
B409 B410	5"	45°
B411	3'-2"	19°
B415 B416	1'-10"	45°
B418 B419 B420	2'-3"	45°
B421	3'-1"	10°
B425 B426 B427	1'-11"	45°

SEE LEGEND ON SHEET 6 FOR DESCRIPTION OF ★ ⬢ ◥ ⬓ ▲

BAR MARK	NO. REQ'D.	LENGTH
B410	1 SERIES OF 5	4'-0" TO 12'-8"
B416	1 SERIES OF 5	3'-2" TO 11'-10"

BAR SERIES TABLE

DIMENSIONS IN BENDING DETAILS ARE OUT TO OUT OF BAR.

Ⓢ - LENGTH SHOWN FOR BAR IS AN AVERAGE AND SHOULD ONLY BE USED FOR BAR WEIGHT CALCULATIONS. SEE BAR SERIES TABLE FOR ACTUAL LENGTHS.

BENT BARS IF USED IN BAR SERIES TABLE SHALL BE BENT AFTER CUTTING.

NO.	DATE	REVISION	BY

STATE OF WISCONSIN
DEPARTMENT OF TRANSPORTATION
STRUCTURES DESIGN SECTION

STRUCTURE B-33-123

CONST. SPEC. WI "13" | DRAWN BY RLR | PLANS CK'D. DHW

NORTH ABUTMENT DETAILS

SHEET 7 OF 12

8

8

FILE= 2398000_07_n_ab_det.dgn
DATE= 5/24/2012

2398000_07_n_ab_det.dgn 5/24/2012 4:20:11 PM rrabska

STATE PROJECT NUMBER

5648-00-72

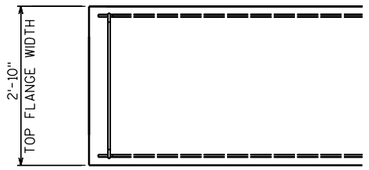

*THE THEORETICAL INITIAL CAMBER VALUE AT THE TIME OF STRAND RELEASE AT MIDSPAN MULTIPLIED BY A FACTOR OF 1.4 TO ACCOUNT FOR CAMBER GROWTH FROM THE TIME OF STRAND RELEASE TO JOBSITE PLACEMENT.

SPAN	CAMBER (IN.) *
1	1.44

THESE VALUES ARE NOT TO BE USED IN DETERMINING 'T'. USE ACTUAL GIRDER SHOTS. SEE SHEET 7 FOR SLAB HAUNCH DETAIL.

THESE VALUES ARE FOR INFORMATIONAL PURPOSES ONLY.

TOP VIEW OF GIRDER ENDS

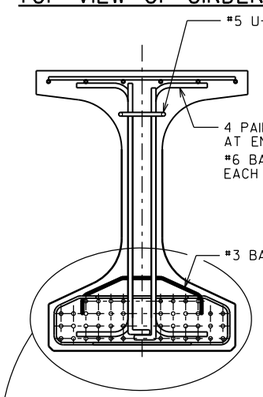

SECTION A-A

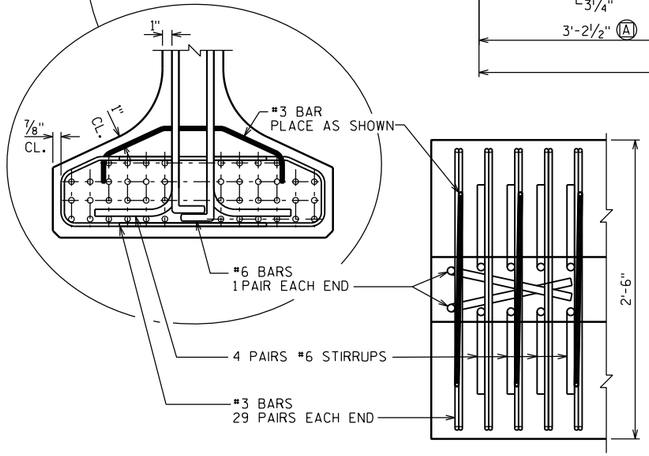

BOTTOM FLANGE

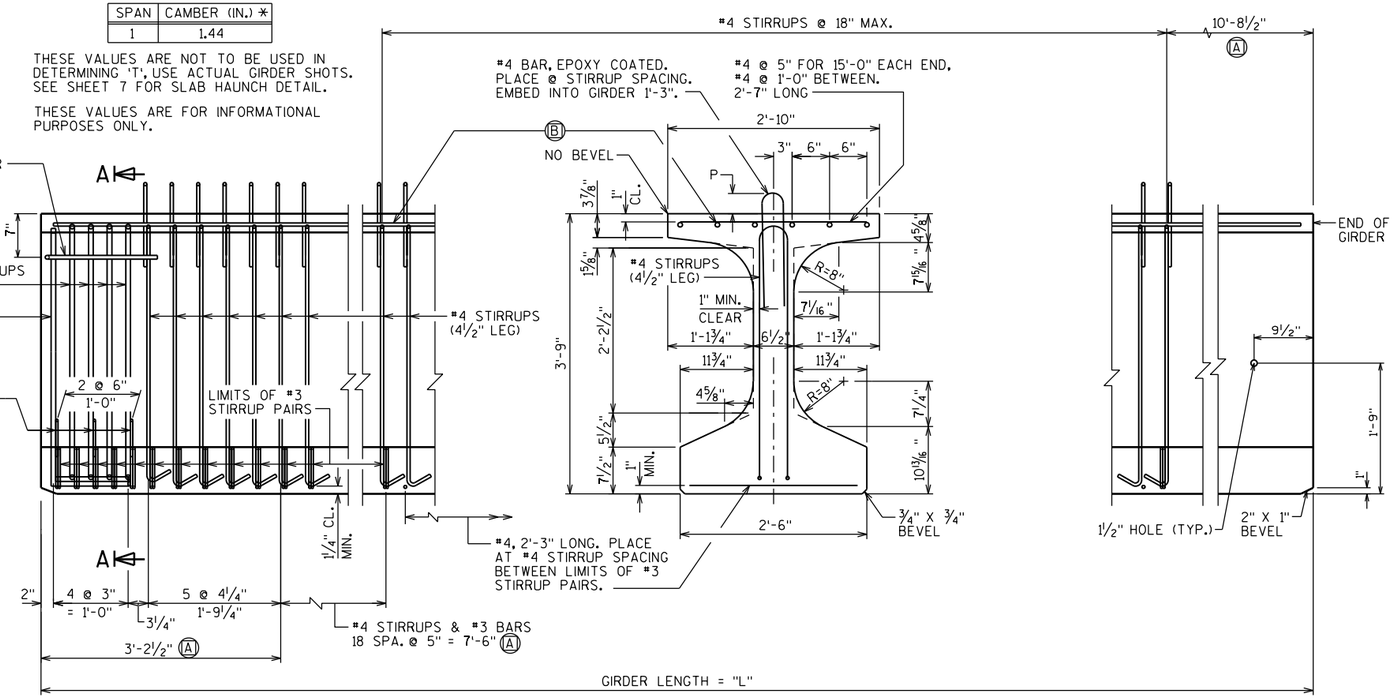

SIDE VIEW & TYP. SECTION IN SPAN

Ⓐ DETAIL TYP. AT EACH END

Ⓑ 6 #4 BARS, FULL LENGTH, MIN. LAP = 1'-11"

GIRDER NOTES

TOP OF GIRDER TO BE ROUGH FLOATED AND BROOMED TRANSVERSELY FOR BONDING TO THE SLAB, EXCEPT THE OUTSIDE 8" OF GIRDER, WHICH SHALL RECEIVE A SMOOTH FINISH. AN APPROVED CONCRETE SEALER SHALL BE APPLIED TO ALL SMOOTH SURFACES INCLUDING THE OUTSIDE 8" OF THE TOP FLANGE.

DO NOT APPLY CONCRETE SEALER TO SURFACES RECEIVING APPLICATION OF CONCRETE STAINING.

THE GIRDERS SHALL BE PROVIDED WITH A SUITABLE LIFTING DEVICE FOR HANDLING AND ERECTING THE GIRDERS.

PRESTRESSING STRANDS SHALL BE 0.6"ϕ - 7 WIRE LOW-RELAXATION STRANDS WITH AN ULTIMATE STRENGTH OF 270,000 psi.

STRANDS SHALL BE FLUSH WITH THE END OF GIRDER. FOR GIRDER ENDS EMBEDDED COMPLETELY IN CONCRETE, ENDS OF STRANDS SHALL BE COATED WITH NON-BITUMINOUS JOINT SEALER. FOR GIRDER ENDS THAT ARE FINALLY EXPOSED, COAT THE GIRDER ENDS, EXPOSED STRAND ENDS AND ALL NON-BONDING SURFACES WITHIN 2 FEET OF THE GIRDER ENDS WITH A NON-PIGMENTED EPOXY CONFORMING TO AASHTO M-235 TYPE III, CLASS B OR C. THE EPOXY SHALL BE APPLIED AT LEAST 3 DAYS AFTER MOIST CURING HAS CEASED AND PRIOR TO APPLICATION OF THE SEALER.

FOR DIAPHRAGM INSERT & CONNECTION DETAILS SEE "STEEL DIAPHRAGM" SHEET.

ALL GIRDERS SHALL BE CAST FULL LENGTH AS SHOWN.

SPACING SHOWN FOR #4 STIRRUPS IS FOR GRADE 60 REINFORCEMENT. IF THE FABRICATOR WANTS TO BUILD A BAR STEEL CAGE BY WELDING LONGITUDINAL REINFORCEMENT TO THE #4 STIRRUPS, 1 OPTION IS AVAILABLE:

USE ASTM A706, GRADE 60 REINFORCEMENT AND THE STIRRUP SPACING AS SHOWN ON THE PLANS.

AN ALTERNATE EQUIVALENT OF WELDED WIRE FABRIC (WWF) ASTM A497 MAY BE SUBSTITUTED FOR THE STIRRUP REINFORCEMENT SHOWN, UPON APPROVAL OF THE STRUCTURES DEVELOPMENT CHIEF, (608)266-5161.

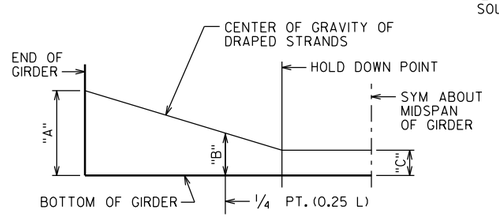

DRAPED STRAND PROFILE

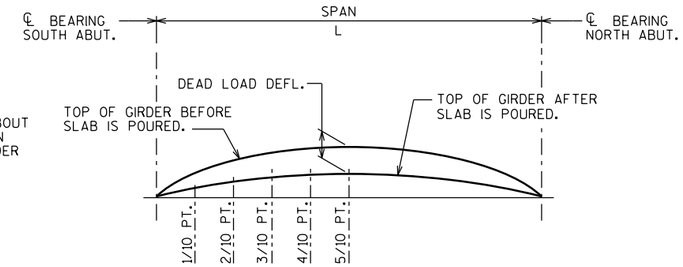

DEAD LOAD DEFLECTION DIAGRAM

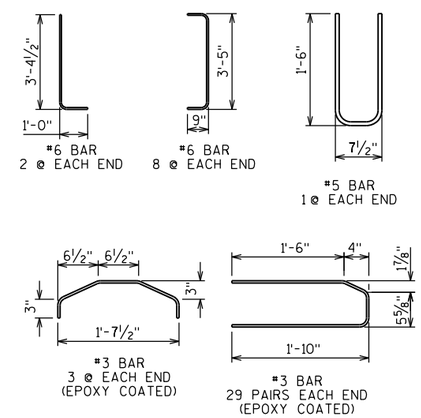

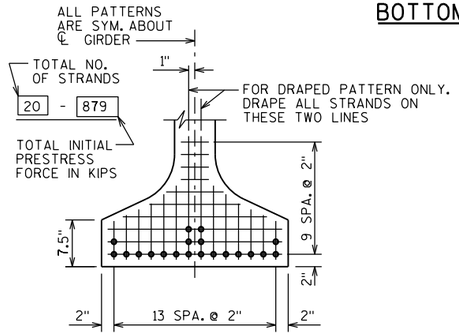

TYP. STRAND PATTERN

* MINIMUM CYLINDER STRENGTH OF CONCRETE @ TIME OF TRANSFER OF PRESTRESS FORCE.

GIRDER DATA

SPAN	GIRDER	GIRDER LENGTH "L"	DEAD LOAD DEFL. (IN.) 1/10	2/10	3/10	4/10	5/10	6/10	7/10	8/10	9/10	CONC. STRGTH. f'c (p.s.i.)	"P" 1ST 1/3 OF GIRDER	"P" MID 1/3 OF GIRDER	"P" END 1/3 OF GIRDER	DIA. OF STRAND (IN.)	DRAPED PATTERN TOTAL NO. OF STRANDS	f'ci (P.S.I.) *	(IN.) "A"	"B" MIN.	"B" MAX.	"C"	UNDRAPED PATTERN TOTAL NO. OF STRANDS	f'ci (P.S.I.) *
1	1-4	79'-0"	0.24	0.45	0.62	0.72	0.75	0.72	0.62	0.45	0.24	8000	9"	7"	9"	0.6	20	6800	41.0	13.25	16.25	4.0	-	-

NO.	DATE	REVISION	BY

STATE OF WISCONSIN
DEPARTMENT OF TRANSPORTATION
STRUCTURES DESIGN SECTION

STRUCTURE B-33-123

CONST. SPEC. WI "13" | DRAWN BY RLR | PLANS CK'D. DHW

45W" PRESTRESSED GIRDER DETAILS

SHEET 8 OF 12
126

FILE= 2398000_08_GIRD.DGN
DATE= 5/24/2012

8

8

STATE PROJECT NUMBER

5648-00-72

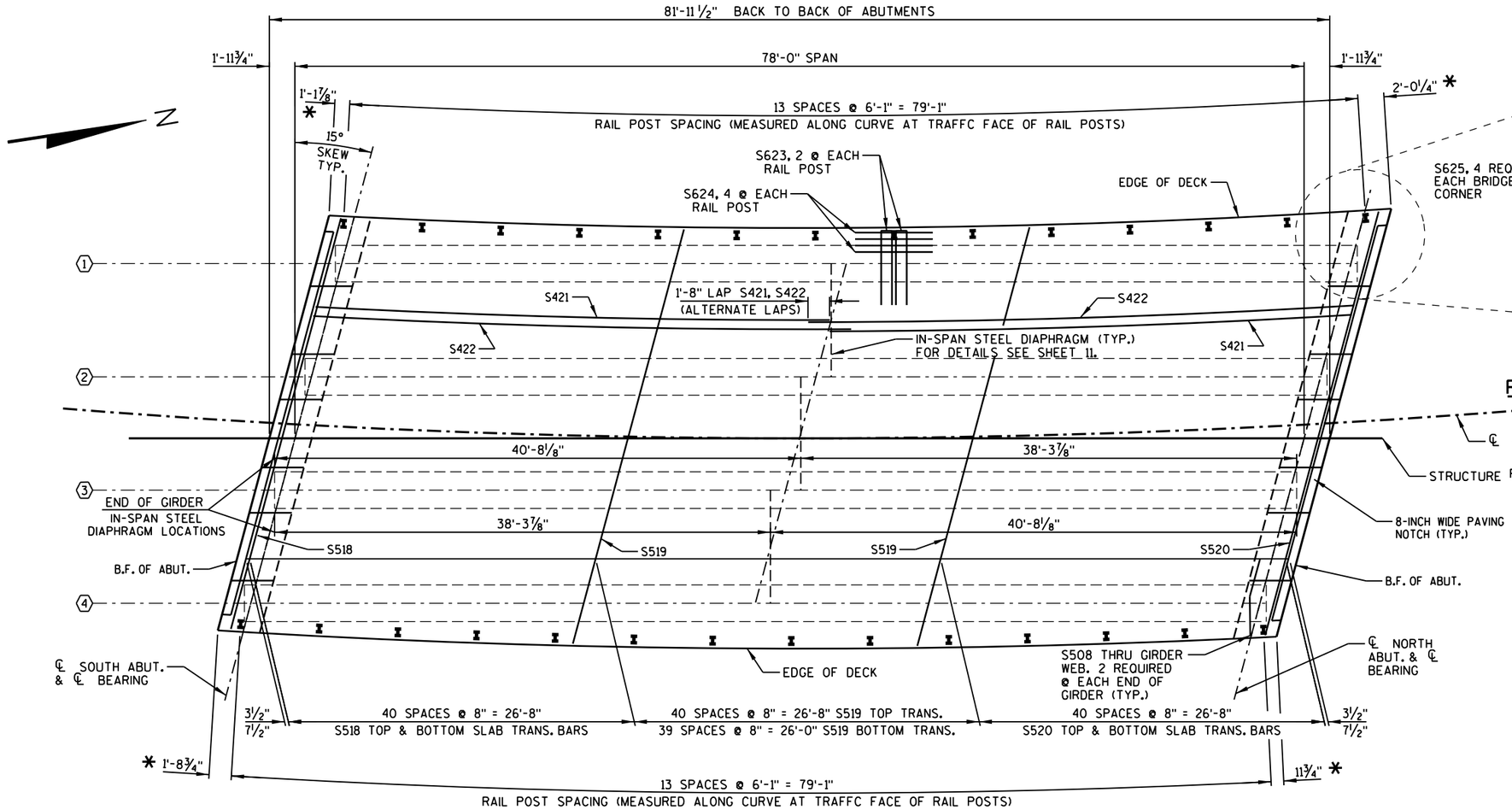

PLAN

NOTE: PLACE LONGITUDINAL BARS S421 & S422 PARALLEL TO CURVED EDGE OF DECK

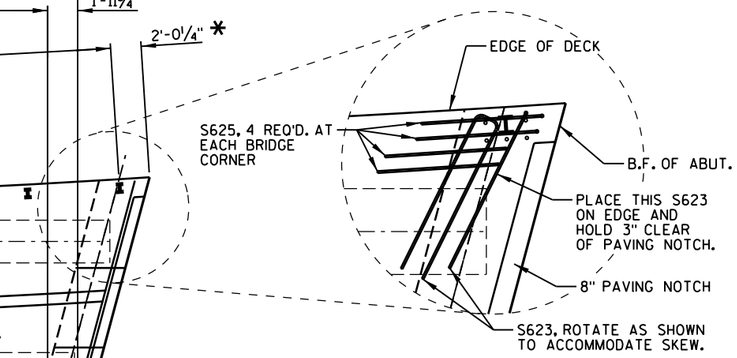

RAIL POST ANCHOR - CORNER DETAIL

GENERAL NOTES

⬡ - INDICATES GIRDER NUMBER

SEE CROSS SECTION THRU BRIDGE SHEET 11 FOR TYPICAL LONGITUDINAL BAR SPACING.

* CORNER DISTANCES TO END RAIL POSTS ARE MEASURED ALONG EDGE OF SLAB. POST SPACING ALONG WEST EDGE OF SLAB IS 6'-0 15/16" AND ALONG EAST EDGE IS 6'-1 1/16".

TO DETERMINE '†', ELEV. OF TOP OF GIRDERS AT ℄ OF SUBSTRUCTURE UNITS & AT 1/10 POINTS OF EACH SPAN SHALL BE TAKEN. TO DETERMINE THE TOP OF SLAB ELEVATION FOR POINT REFERRED USE TABLE ON THIS SHEET AND ADJUST FOR CROSS SLOPE OVER GIRDER. THEN FOLLOW THIS PROCESS:

TOP OF SLAB ELEV. AT FINAL GRADE
- TOP OF GIRDER ELEVATION
+ DEADLOAD DEFLECTION (SEE SHEET 8)
- SLAB THICKNESS

= HAUNCH HEIGHT '†'

IF 1 1/4" MINIMUM HAUNCH HEIGHT '†' CANNOT BE MAINTAINED, THE GRADE LINE MAY BE REVISED BY THE ENGINEER AT THE OPTION OF THE CONTRACTOR. THE PLAN SLAB THICKNESS SHALL BE HELD. MAX. HAUNCH HEIGHT EQUALS "STIRRUP PROJECTION" MINUS 3".

8

TOP OF SLAB ELEVATIONS
CURVED EDGE OF SLAB LOCATIONS

LOCATION	LOCATION SPAN POINT	EAST EDGE OF SLAB TANGENT	EAST EDGE OF SLAB OFFSET RT	EAST EDGE OF SLAB ELEV	GIRDER 4	GIRDER 3	GIRDER 2	GIRDER 1	WEST EDGE OF SLAB ELEV	WEST EDGE OF SLAB TANGENT	WEST EDGE OF SLAB OFFSET LT
C/L S. ABUT.	1.0	-43.30	14.96	983.03	982.89	982.32	981.75	981.19	980.95	-34.70	17.12
	1.1	-35.61	15.38	982.89	982.72	982.16	981.59	981.03	980.81	-26.99	16.78
	1.2	-27.90	15.71	982.76	982.57	982.00	981.44	980.88	980.68	-19.26	16.52
	1.3	-20.17	15.97	982.63	982.42	981.86	981.30	980.74	980.56	-11.51	16.35
	1.4	-12.41	16.14	982.51	982.29	981.73	981.17	980.61	980.44	-3.73	16.26
	1.5	-4.64	16.24	982.40	982.18	981.62	981.06	980.50	980.33	4.07	16.26
	1.6	3.16	16.24	982.29	982.07	981.52	980.96	980.41	980.22	11.89	16.35
	1.7	10.98	16.17	982.19	981.98	981.42	980.87	980.32	980.13	19.74	16.53
	1.8	18.82	16.01	982.10	981.89	981.34	980.80	980.25	980.04	27.61	16.80
	1.9	26.69	15.76	982.01	981.82	981.28	980.73	980.19	979.96	35.51	17.16
C.L N. ABUT	2.0	34.58	15.43	981.93	981.77	981.22	980.68	980.14	979.89	43.43	17.61

TANGENT IS MEASURED NORTH (+) ALONG STRUCTURE REFERENCE LINE FROM POINT OF TANGENCY AT STATION 152+81.38.
OFFSET IS MEASURED NORMAL TO STRUCTURE REFERENCE LINE.
1/10TH POINTS ON GIRDERS ARE MEASURED AT 7.80' INTERVALS BETWEEN C/L'S OF BEARING
EDGE OF SLAB 1/10TH POINTS ARE LOCATED COLINEAR WITH GIRDER 1/10TH POINTS.

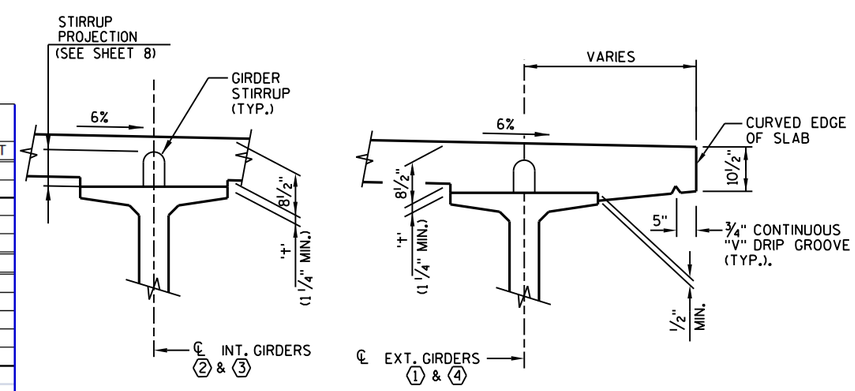

SLAB HAUNCH DETAIL

8

NO.	DATE	REVISION	BY

STATE OF WISCONSIN
DEPARTMENT OF TRANSPORTATION
STRUCTURES DESIGN SECTION

STRUCTURE B-33-123

CONST. SPEC. WI "13" | DRAWN BY RLR | PLANS CK'D. DHW

SUPERSTRUCTURE

SHEET 9 OF 12
127

FILE= 2398000_09_SUPER.DGN
DATE= 5/24/2012

2398000_09_SUPER.dgn 5/24/2012 9:34:06 AM rrabska

STATE PROJECT NUMBER
5648-00-72

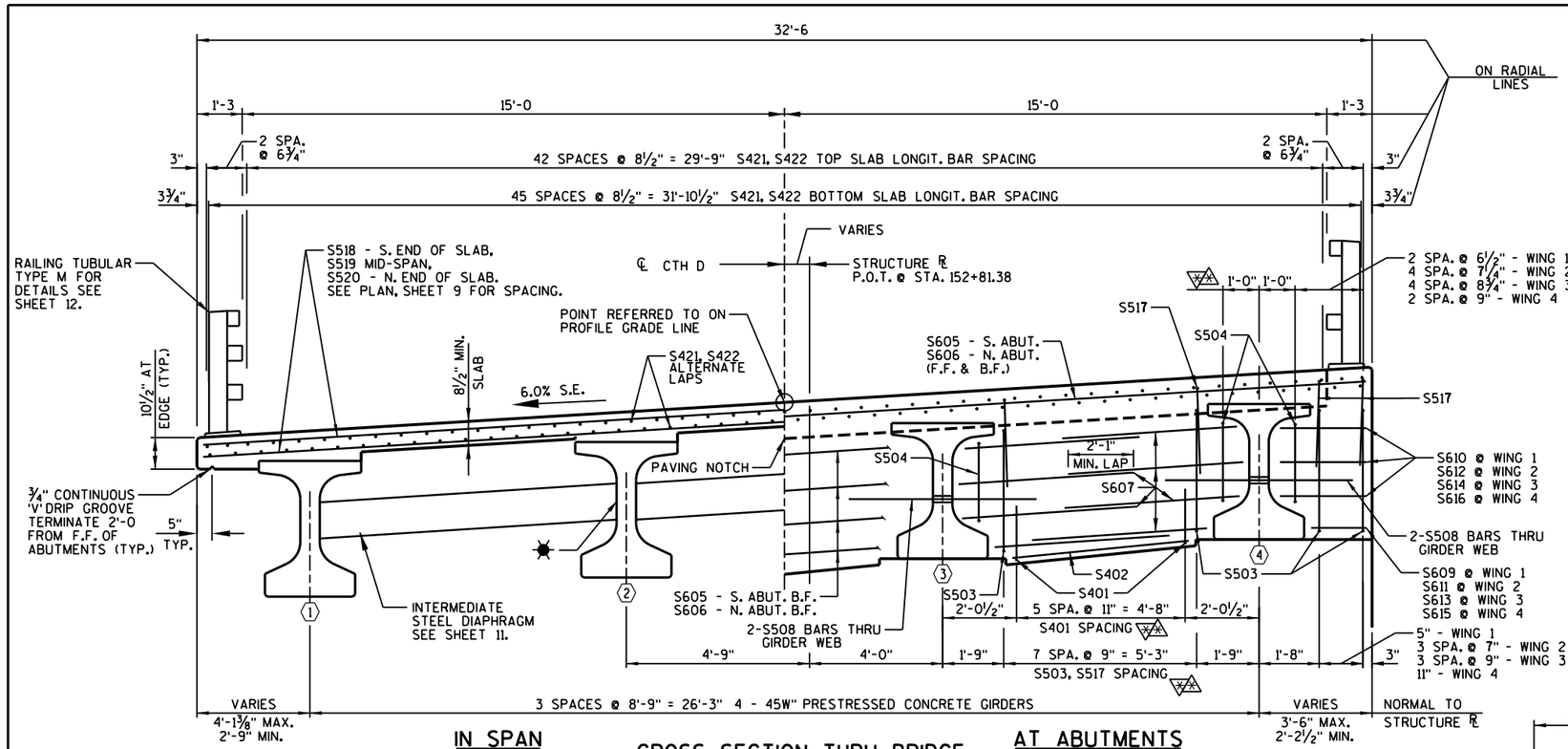

IN SPAN

CROSS SECTION THRU BRIDGE

(LOOKING NORTH)

AT ABUTMENTS

BILL OF BARS (COATED) 18,130 LBS.

MARK	NUMBER REQ'D.	LENGTH	BENT	DESCRIPTION
S401	36	3-10	X	DIAPH. @ ABUT. - SEMI-EXP. NOTCH - STIRRUP - VERT.
S402	12	5-1		DIAPH. @ ABUT. - SEMI-EXP. NOTCH - HORIZ.
S503	60	13-1	X	DIAPH. @ ABUT. - STIRRUP - VERT.
S504	16	10-9	X	DIAPH. @ ABUT. - STIRRUP - VERT.
S605	6	32-10		DIAPH. @ ABUT. - S. ABUT. - B.F. - HORIZ.
S606	6	33-11		DIAPH. @ ABUT. - N. ABUT. - B.F. - HORIZ.
S607	48	5-0		DIAPH. @ ABUT. - INT. BAYS - F.F. - HORIZ.
S508	16	6-0	X	DIAPH. @ ABUT. - THRU GIRDER WEB - F.F. - HORIZ.
S609	1	8		DIAPH. @ ABUT. - END @ WING 1 - F.F. - HORIZ.
S610	3	1-7		DIAPH. @ ABUT. - END @ WING 1 - F.F. - HORIZ.
S611	1	1-11		DIAPH. @ ABUT. - END @ WING 2 - F.F. - HORIZ.
S612	3	2-11		DIAPH. @ ABUT. - END @ WING 2 - F.F. - HORIZ.
S613	1	2-5		DIAPH. @ ABUT. - END @ WING 3 - F.F. - HORIZ.
S614	3	3-5		DIAPH. @ ABUT. - END @ WING 3 - F.F. - HORIZ.
S615	1	1-1		DIAPH. @ ABUT. - END @ WING 4 - F.F. - HORIZ.
S616	3	2-1		DIAPH. @ ABUT. - END @ WING 4 - F.F. - HORIZ.
S517	60	6-2	X	DIAPH. @ ABUT. - TOP - STIRRUP - VERT.
S518	80	32-10		SLAB - SOUTH END - TOP & BOTTOM - TRANS.
S519	81	33-2		SLAB - MID-SPAN - TOP & BOTTOM - TRANS.
S520	80	33-6		SLAB - NORTH END - TOP & BOTTOM - TRANS.
S421	93	40-0		SLAB - TOP & BOTTOM - LONGIT.
S422	93	42-2		SLAB - TOP & BOTTOM - LONGIT.
S623	56	12-0	X	SLAB @ RAIL POSTS - 2 PER POST
S624	96	6-0		SLAB @ RAIL POSTS - 4 PER POST
S625	16	7-0	X	SLAB @ RAIL POSTS - 4 PER CORNER POST

DIMENSIONS IN BENDING DETAILS ARE OUT TO OUT OF BAR.
EPOXY COAT ALL SUPERSTRUCTURE BAR REINFORCEMENT.

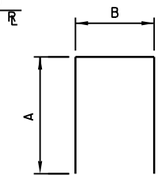

MARK	A	B
S401	1'-6"	1'-0"
S517	2'-0"	2'-2"
S623	5'-9"	10"

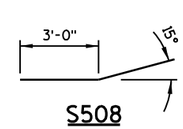

S508

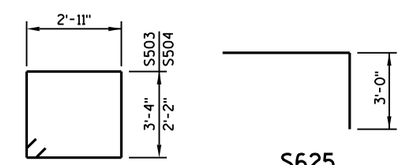

S503, S504

S625

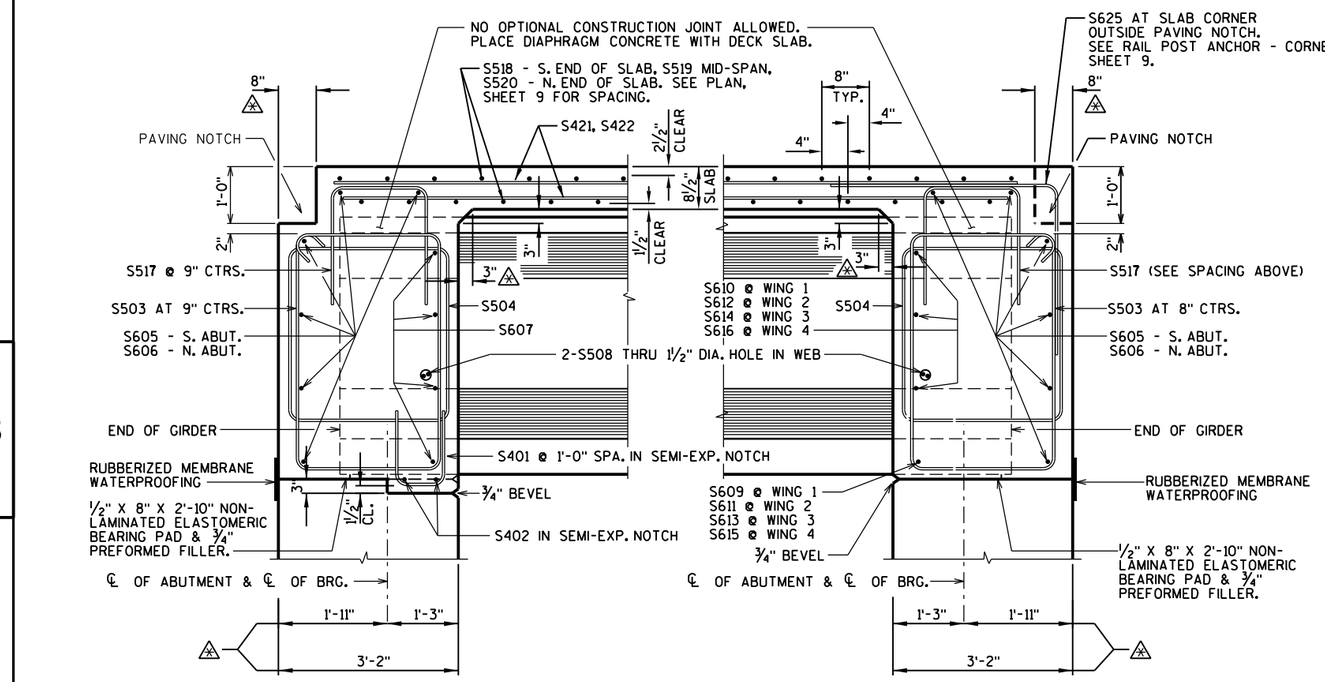

INTERIOR BAYS

PART LONGITUDINAL SECTION

DIAPHRAGM ENDS

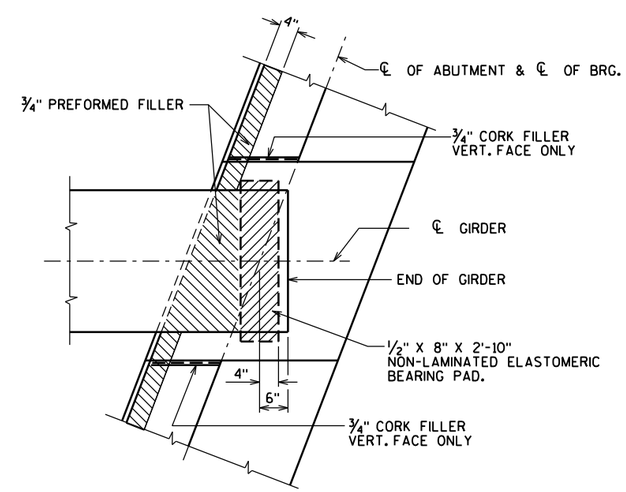

BEARING PAD DETAIL

LEGEND

⬡ - INDICATES GIRDER NUMBER

✱ - FOR DETAILS OF STEEL DIAPHRAGMS AND DIAPHRAGM INSERTS, SEE SHEET 11. FOR LAYOUT AND SPACING OF STEEL DIAPHRAGMS, SEE PLAN, SHEET 9.

⚠ - DIMENSION IS TAKEN NORMAL TO ℄ SUBSTRUCTURE UNITS.

⚠⚠ - DIMENSION IS TAKEN NORMAL TO ℄ GIRDER.

F.F. - FRONT FACE

B.F. - BACK FACE

NO.	DATE	REVISION	BY

STATE OF WISCONSIN
DEPARTMENT OF TRANSPORTATION
STRUCTURES DESIGN SECTION

STRUCTURE B-33-123

CONST. SPEC.	WI "13"	DRAWN BY	RLR	PLANS CK'D.	DHW

SUPERSTRUCTURE SECTIONS & DETAILS

SHEET 10 OF 12
128

8

8

FILE= 2398000_10_SUPER_X.DGN
DATE= 5/24/2012

2398000_10_SUPER_X.dgn 5/24/2012 6:47:12 PM trabska

STATE PROJECT NUMBER

5648-00-72

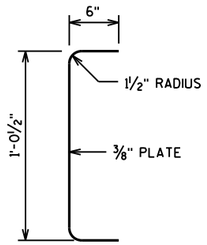

SECTION THRU ALTERNATE DIAPHRAGM

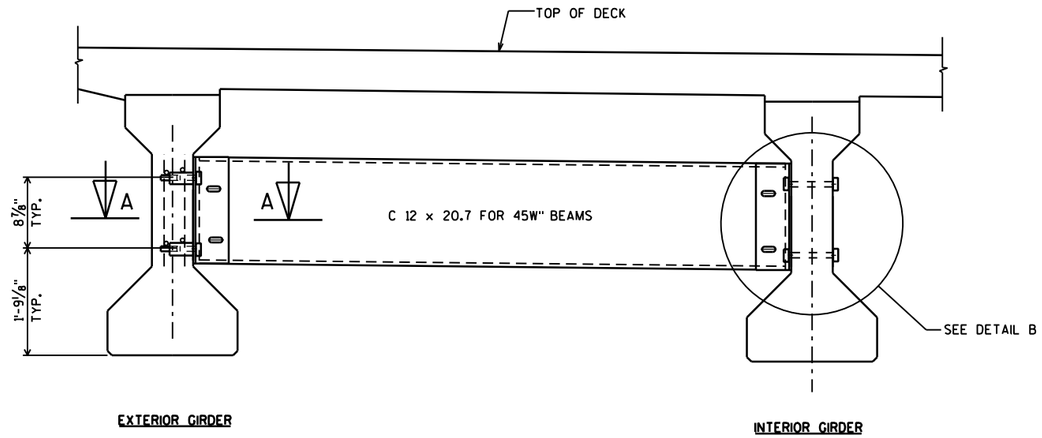

TRANSVERSE SECTION AT DIAPHRAGM

NOTES

ALL DIAPHRAGM MATERIAL NOT EMBEDDED IN THE CONCRETE GIRDER SHALL BE PAID FOR AT THE UNIT PRICE BID FOR "STEEL DIAPHRAGMS B-33-123", EACH.

EACH DIAPHRAGM BETWEEN GIRDERS SHALL CONSTITUTE ONE UNIT.

ALL DIAPHRAGM STRUCTURAL STEEL SHALL BE ASTM A709 GRADE 36.

ALL BOLTS, NUTS AND WASHERS SHALL BE ASTM A325 TYPE 1.

ALL DIAPHRAGM STRUCTURAL STEEL SHOWN SHALL BE HOT-DIPPED GALVANIZED. ALL BOLTS, NUTS AND WASHERS SHALL BE HOT-DIPPED GALVANIZED IN ACCORDANCE WITH ASTM A153 CLASS C. GALVANIZED NUTS SHALL BE TAPPED OVERSIZE IN ACCORDANCE WITH THE REQUIREMENTS OF ASTM A563 AND SHALL MEET THE REQUIREMENTS OF SUPPLEMENTARY REQUIREMENT S1 OF ASTM A563, LUBRICANT AND TEST FOR COATED NUTS.

SEE SHEET 9 FOR LOCATION OF DIAPHRAGMS.

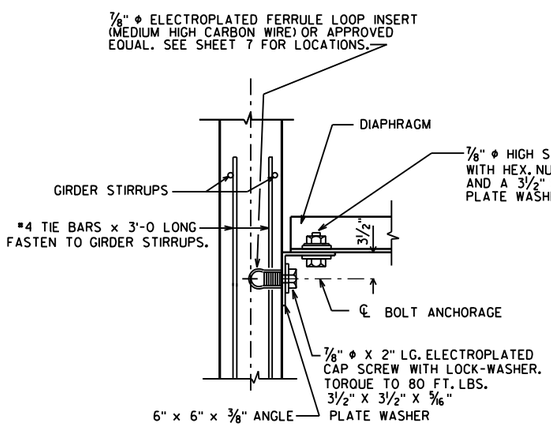

SECT. A-A

(FOR EXTERIOR ATTACHMENT)

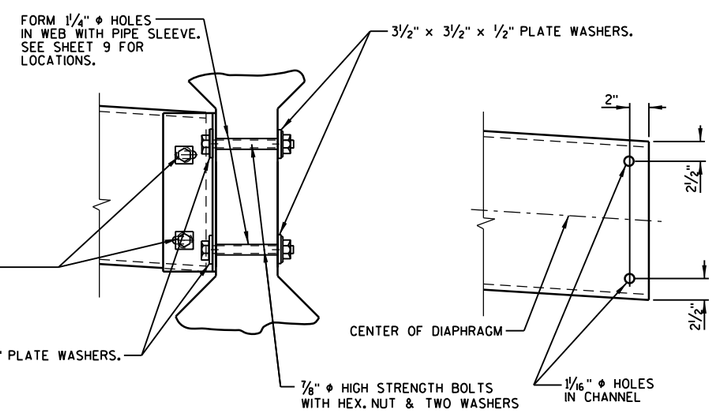

DETAIL B

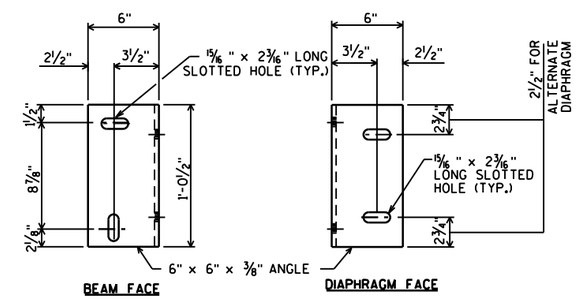

DIAPHRAGM SUPPORT

8

8

NO.	DATE	REVISION	BY

STATE OF WISCONSIN
DEPARTMENT OF TRANSPORTATION
STRUCTURES DESIGN SECTION

STRUCTURE B-33-123

CONST. SPEC. WI "13"	DRAWN BY RLR	PLANS CK'D. DHW

STEEL DIAPHRAGM

SHEET 11 OF 12

129

FILE= 2398000_11_DIAPH.DGN
DATE= 5/24/2012

2398000_11_DIAPH.dgn 5/24/2012 10:13:07 AM frabska

STATE PROJECT NUMBER

5648-00-72

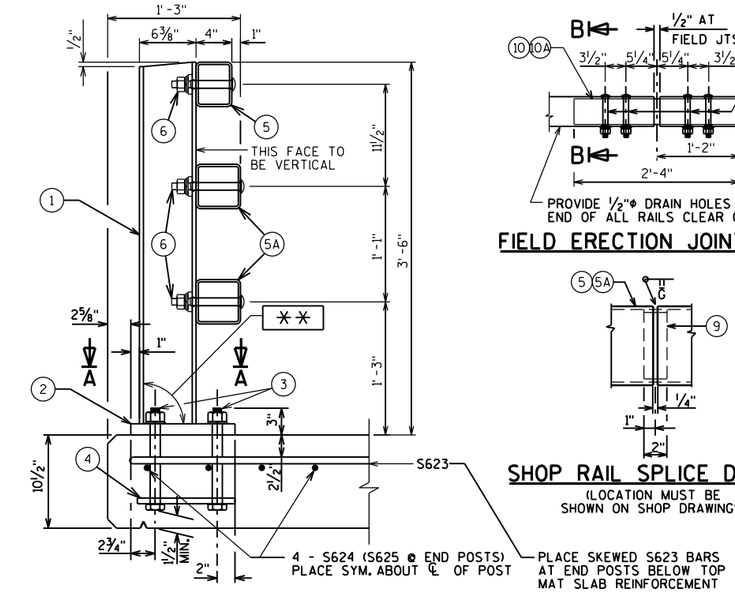

SECTION THRU RAILING ON DECK

✱✱ - 86° 34' @ WEST EDGE OF SLAB
93° 26' @ EAST EDGE OF SLAB

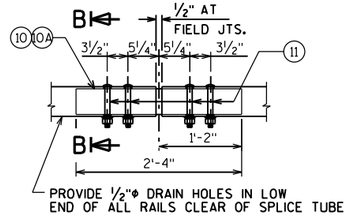

FIELD ERECTION JOINT DETAIL

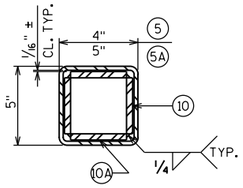

SECTION B-B

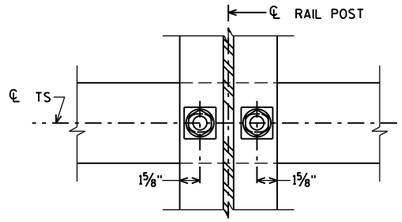

SECTION THRU POST WEB

SHOP RAIL SPLICE DETAIL

(LOCATION MUST BE SHOWN ON SHOP DRAWINGS)

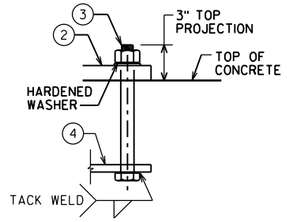

ANCHOR BOLTS

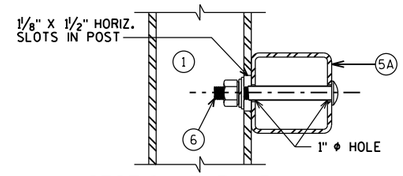

SECTION THRU RAIL

NOTE: CONNECTIONS AT LOWER RAILS SHOWN. CONNECTIONS AT TOP RAIL SIMILAR.

TYPICAL RAIL TO POST CONNECTIONS

LEGEND

1. W6 x 25 WITH 1⅛" X 1½" HORIZ. SLOTS ON EACH SIDE OF POST FOR BOLT NO. 6. CUT BOTTOM OF POST TO MATCH CROSS SLOPE OF ROADWAY. PLACE POST VERTICAL. PLACE POSTS NORMAL TO GRADE LINE.
2. PLATE 1¼" x 11¾" x 1'-8" WITH 15/16" X 1⅝" SLOTTED HOLES FOR ANCHOR BOLTS NO. 3. WELD TO NO. 1 AS SHOWN. SLOTS PARALLEL TO SHORT SIDE OF PLATE.
3. ASTM A449 - 1⅛" DIA. ANCHOR BOLTS WITH NUT AND HARDENED WASHER (ALL GALVANIZED). 5 REQ'D. PER POST. THREAD 3" AND PLACE NORMAL TO PLATE NO. 2. CHAMFER TOP OF BOLTS BEFORE THREADING. USE 10¾" LONG.
4. ⅝" x 11" x 1'-8" ANCHOR PLATE (GALVANIZED) WITH 1 3/16" DIA. HOLES FOR ANCHOR BOLTS NO. 3
5. TS 5 x 4 x 0.25 STRUCTURAL TUBING. ATTACH TO NO. 1 WITH NO. 6.
5A. TS 5 x 5 x 0.25 STRUCTURAL TUBING. ATTACH TO NO. 1 WITH NO. 6.
6. ⅞" DIA. A325 SLOTTED ROUND HEAD BOLT WITH NUT, 3/16" X 1⅝" X 1⅝" WASHER, AND LOCK WASHER (2 REQ'D. AT EACH RAIL TO POST LOCATION.)
7. ½" THK. BACK-UP PLATE WITH 2 - ⅞" X 1½" THREADED SHOP WELDED STUDS (NO. 12). BOLT TO RAIL AS SHOWN IN DETAIL. REQUIRED AT THRIE BEAM GUARD RAIL ATTACHMENTS ONLY. PLACE SYMMETRICALLY ABOUT TUBES NO. 5A.
8. 1" DIA. HOLES IN PLATE NO. 7 & TUBES NO. 5A FOR ⅞" DIA. A325 BOLTS WITH HEX NUTS AND WASHERS. 6 HOLES IN TUBES AND PLATE NO. 7.
9. SPLICE SLEEVE FABRICATED FROM ¼" PLATE. PROVIDE "SLIDING FIT".
10. ⅜" X 3⅝" X 2'-4" PLATE. 2 PER RAIL. USED IN NO. 5 & 5A.
10A. ⅜" X 2⅝" X 2'-4" PLATE USED IN NO. 5, ⅜" X 3⅝" X 2'-4" PLATE USED IN NO. 5A. 2 PER RAIL.
11. ⅞" Φ A325 ROUND HEAD BOLT WITH NUT, WASHER, AND LOCK WASHER. USE 15/16" X 1¼" LONGIT. SLOTTED HOLES AT FIELD JOINTS IN PLATE NO. 10A.
12. ⅞" DIA. X 1½" LONG THREADED SHOP WELDED STUDS (2 REQ'D).
13. ⅜" X 8" X 1'-6" PLATE. BOLT TO RAIL AS SHOWN IN DETAIL. REQ'D. AT THRIE BEAM GUARD RAIL ATTACHMENTS ONLY. PLACE SYM. ABOUT TUBES NO. 5A.
14. ⅞" DIA. X 2" LONG A325 HEX BOLT WITH NUT AND WASHER (5 REQ'D).
15. 1" Φ HOLES IN TUBES NO. 5A FOR ⅞" DIA. A325 ROUND HEAD BOLT WITH NUT, WASHER AND LOCK WASHER (4 REQ'D.). 4 HOLES IN TUBES.

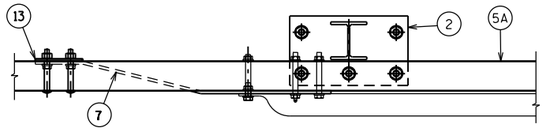

TOP VIEW AT END POST

(THRIE BEAM RAIL ATTACHMENT)

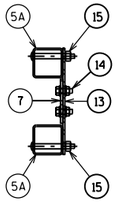

SECTION C-C

SECTION A-A

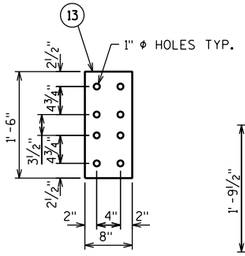

ANCHOR PLATE

AT BEAM GUARD ATTACHMENT

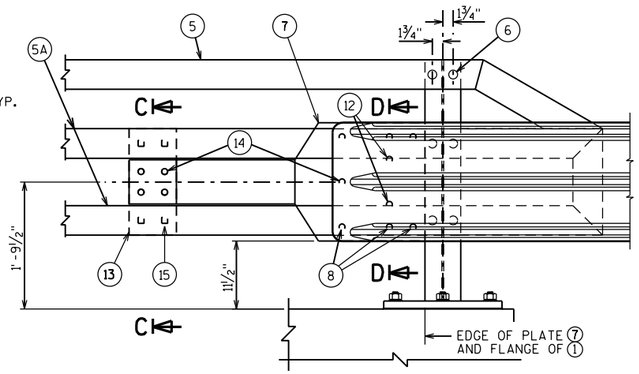

DETAIL AT END POST

(THRIE BEAM RAIL ATTACHMENT)

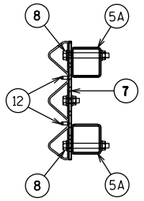

SECTION D-D

GENERAL NOTES

1. BID ITEM SHALL BE "RAILING TUBULAR TYPE M B-33-123" WHICH INCLUDES ALL ITEMS SHOWN.
2. RAIL POST AND BASE PLATES SHALL CONFORM TO THE REQUIREMENTS OF ASTM A709 GRADE 50. HOLLOW RAILING STRUCTURAL TUBING SHALL CONFORM TO THE REQUIREMENTS OF ASTM A500 GRADE B OR C WITH A CERTIFIED FY = 50 KSI. ANCHOR PLATES, AND SPLICE TUBE PLATES SHALL CONFORM TO THE REQUIREMENTS OF ASTM A709 GRADE 36.
3. THE NUT SECURING THE POST BASE PLATE TO THE CONCRETE SHALL BE TIGHTENED TO A SNUG FIT AND GIVEN AN ADDITIONAL ⅛ TURN.
4. RAILS SHALL BE CONTINUOUS OVER A MINIMUM OF THREE (3) POSTS WITHOUT SPLICES WHERE POSSIBLE.
5. ENDS OF TUBE SECTIONS SHALL BE SAWED. GRIND SMOOTH EXPOSED EDGES. ALL CUT ENDS SHALL BE TRUE AND SMOOTH.
6. WELD IS THE SAME ON BOTH FLANGES. FLANGE WELD DOES NOT REQUIRE MAGNETIC PARTICLE TESTING.
7. FILL BOLT SLOT OPENINGS IN POST SHIMS AND PLATE NO. 2 AND CAULK AROUND PERIMETER OF PLATE NO. 2 WITH NON-STAINING GRAY NON-BITUMINOUS JOINT SEALER. STEEL POST SHIMS MAY BE USED UNDER POSTS WHERE REQ'D. FOR ALIGNMENT.
8. POST BASE PLATES SHALL BE FLAT WITH ALL SURFACES SMOOTH AND FREE FROM WARP AND ALL EDGES SMOOTH, STRAIGHT AND VERTICAL. ALL PLATE CUTS SHALL BE MACHINE OR MACHINE FLAME CUT.
9. ALL MATERIAL SHALL BE GALVANIZED AFTER FABRICATION. PRIOR TO GALVANIZING, ALL STEEL RAILING POSTS & STEEL TUBING SHALL BE GIVEN A NO. 6 BLAST CLEANING BY S.S.P.C. SPECIFICATIONS.
10. PAINTING IS NOT REQUIRED.
11. THIS RAILING MEETS NCHRP REPORT 350 EVALUATION CRITERIA FOR TEST LEVEL 4 (TL-4).
12. PLACE FIRST BOTTOM LONGITUDINAL BAR CLEAR OF DRIP GROOVE.
13. ALL POST SPACINGS ARE MEASURED HORIZONTALLY ALONG CURVED EDGE OF SLAB AT CENTERLINES OF POST BASES.
14. FABRICATE RAIL TO MATCH EDGE OF SLAB LAYOUT.

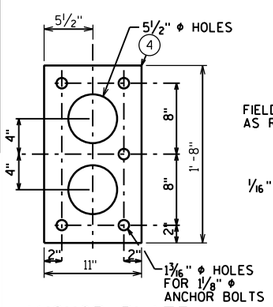

ANCHOR PLATE

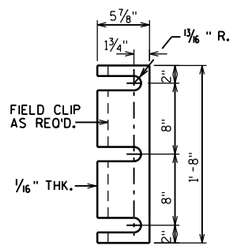

POST SHIM DETAIL

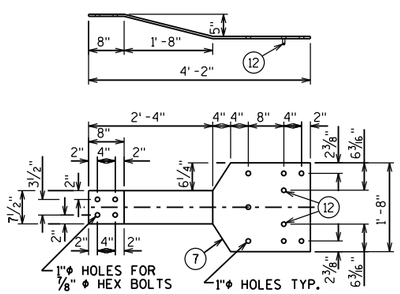

BACK-UP PLATE DETAIL

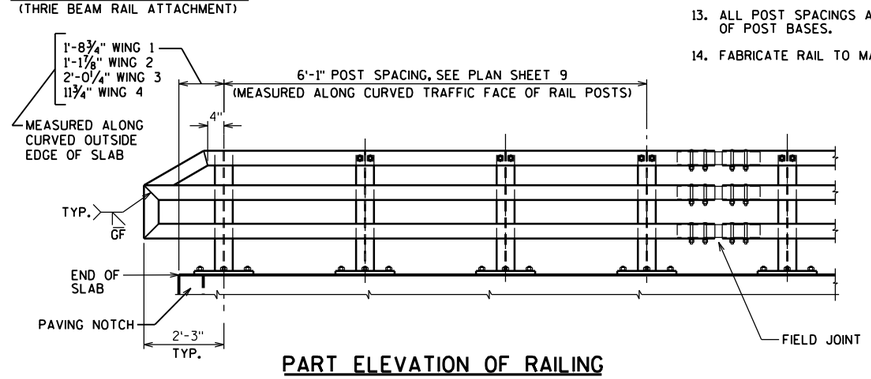

PART ELEVATION OF RAILING

NO.	DATE	REVISION	BY

STATE OF WISCONSIN
DEPARTMENT OF TRANSPORTATION
STRUCTURES DESIGN SECTION

STRUCTURE B-33-123

CONST. SPEC. WI "13" | DRAWN BY RLR | PLANS CK'D. DHW

RAILING TUBULAR TYPE M

SHEET 12 OF 12

130

FILE= 2398000_12_Mrail.dgn
DATE=5/24/2012

8

8

EARTHWORK PROJECT I.D. 5648-00-72

STATION	Real Station	Distance	AREA (SF) Cut	AREA (SF) Salvaged / Unusable Pavement Material	AREA (SF) Fill	AREA (SF) Rock Exc	Incremental Vol (CY) (Unadjusted) Cut Note 1	Incremental Vol (CY) (Unadjusted) Salvaged / Unusable Pavement Material Note 2	Incremental Vol (CY) (Unadjusted) Fill Note 3	Incremental Vol (CY) (Unadjusted) Rock Exc	Cumulative Vol (CY) Cut 1.00 Note 1	Cumulative Vol (CY) Expanded Fill 1.25	Cumulative Vol (CY) Expanded Rock 1.10	Mass Ordinate Note 14
107+50	10750		55	0	0	0	0	0	0	0	0	0	0	0
108+00	10800	50	207	0	0	0	242	0	0	0	242	0	0	242
108+50	10850	50	230	0	0	0	405	0	0	0	647	0	0	647
109+00	10900	50	304	0	0	0	495	0	0	0	1142	0	0	1142
109+50	10950	50	420	0	0	0	670	0	0	0	1813	0	0	1813
110+00	11000	50	618	0	0	0	961	0	0	0	2773	0	0	2773
110+50	11050	50	838	0	0	0	1348	0	0	0	4121	0	0	4121
111+00	11100	50	943	0	0	0	1649	0	0	0	5771	0	0	5771
111+50	11150	50	943	0	0	0	1746	0	0	0	7517	0	0	7517
112+00	11200	50	914	0	0	0	1720	0	0	0	9237	0	0	9237
112+50	11250	50	797	0	0	0	1585	0	0	0	10822	0	0	10822
112+51	11251	1	798	0	0	0	30	0	0	0	10851	0	0	10851
113+50	11350	99	215	0	35	0	1858	0	64	0	12710	80	0	12630
114+00	11400	50	371	0	80	0	543	0	106	0	13252	212	0	13040
114+50	11450	50	176	0	125	0	507	0	190	0	13759	449	0	13310
115+00	11500	50	45	0	203	0	204	0	303	0	13964	828	0	13135
115+50	11550	50	46	0	222	0	84	0	393	0	14048	1320	0	12728
116+00	11600	50	0	0	188	0	43	0	380	0	14091	1795	0	12296
116+13	11613	13	27	0	174	0	7	0	87	0	14097	1903	0	12194
116+50	11650	37	18	0	145	0	31	0	218	0	14128	2176	0	11952
117+00	11700	50	4	0	115	0	20	0	240	0	14149	2476	0	11672
117+50	11750	50	0	0	140	0	4	0	236	0	14152	2771	0	11381
118+00	11800	50	0	0	139	0	0	0	258	0	14153	3094	0	11059
118+41	11841	41	26	0	200	0	20	0	257	0	14173	3415	0	10758
118+50	11850	9	16	0	180	0	7	0	63	0	14180	3494	0	10686
119+00	11900	50	14	0	152	0	27	0	307	0	14207	3878	0	10329
119+20	11920	20	15	0	161	0	11	0	116	0	14218	4023	0	10195
119+40	11940	20	26	0	151	0	15	0	116	0	14233	4167	0	10065
119+50	11950	10	20	0	154	0	9	0	57	0	14241	4238	0	10003
119+80	11980	30	0	0	178	0	11	0	184	0	14252	4469	0	9784
120+00	12000	20	0	0	189	0	0	0	136	0	14252	4638	0	9614
120+50	12050	50	8	0	175	0	8	0	337	0	14260	5059	0	9201
121+00	12100	50	29	0	122	0	34	0	275	0	14295	5402	0	8892
121+50	12150	50	47	0	82	0	70	0	189	0	14365	5638	0	8726
122+00	12200	50	41	0	92	0	81	0	161	0	14446	5840	0	8606
122+50	12250	50	35	0	118	0	70	0	195	0	14516	6083	0	8432
122+51	12251	1	36	0	118	0	1	0	4	0	14517	6089	0	8428
122+52	12252	1	37	0	118	0	1	0	4	0	14518	6094	0	8424
122+53	12253	1	38	0	118	0	1	0	4	0	14520	6100	0	8420
122+54	12254	1	39	0	118	0	1	0	4	0	14521	6105	0	8416
125+00	12500	246	15	0	73	0	246	0	873	0	14768	7196	0	7572
125+50	12550	50	25	0	33	0	38	0	98	0	14805	7319	0	7486
126+00	12600	50	31	0	42	0	52	0	70	0	14857	7406	0	7451
126+50	12650	50	27	0	67	0	54	0	101	0	14911	7532	0	7378
127+00	12700	50	20	0	104	0	44	0	158	0	14955	7729	0	7226
127+10	12710	10	25	0	133	0	8	0	44	0	14963	7784	0	7179
127+30	12730	20	22	0	157	0	17	0	107	0	14981	7918	0	7062
127+50	12750	20	57	0	145	0	29	0	112	0	15010	8058	0	6952
128+00	12800	50	74	0	131	0	122	0	256	0	15132	8378	0	6754
128+50	12850	50	134	0	111	0	193	0	224	0	15325	8658	0	6667

EARTHWORK PROJECT I.D. 5648-00-72

STATION	Real Station	Distance	AREA (SF) Cut	AREA (SF) Salvaged / Unusable Pavement Material	AREA (SF) Fill	AREA (SF) Rock Exc	Incremental Vol (CY) (Unadjusted) Cut Note 1	Incremental Vol (CY) (Unadjusted) Salvaged / Unusable Pavement Material Note 2	Incremental Vol (CY) (Unadjusted) Fill Note 3	Incremental Vol (CY) (Unadjusted) Rock Exc	Cumulative Vol (CY) Cut 1.00 Note 1	Cumulative Vol (CY) Expanded Fill 1.25	Cumulative Vol (CY) Expanded Rock 1.10	Mass Ordinate Note 14
129+00	12900	50	152	0	137	88	265	0	230	81	15590	8945	90	6735
129+50	12950	50	167	0	138	141	296	0	254	212	15886	9263	323	6946
130+00	13000	50	166	0	98	135	308	0	218	256	16194	9536	604	7262
130+50	13050	50	141	0	58	127	284	0	145	243	16477	9716	871	7632
130+87	13087	37	128	0	39	121	184	0	67	170	16661	9800	1058	7920
131+00	13100	13	121	0	35	128	60	0	18	60	16721	9822	1124	8023
131+50	13150	50	118	0	52	154	221	0	81	261	16942	9923	1411	8430
132+00	13200	50	77	0	54	141	180	0	98	273	17122	10045	1711	8788
132+50	13250	50	117	0	79	0	180	0	123	131	17302	10199	1855	8958
133+00	13300	50	61	0	207	0	165	0	265	0	17467	10531	1855	8791
133+40	13340	40	61	0	318	0	90	0	389	0	17557	11017	1855	8394
133+50	13350	10	44	0	283	0	19	0	111	0	17576	11157	1855	8275
134+00	13400	50	30	0	97	73	68	0	352	68	17644	11596	1929	7977
134+50	13450	50	281	0	0	251	288	0	90	300	17932	11708	2259	8484
135+00	13500	50	345	0	0	653	580	0	0	837	18512	11708	3180	9984
135+50	13550	50	588	0	0	674	865	0	0	1229	19377	11708	4532	12201
136+00	13600	50	699	0	0	549	1192	0	0	1132	20569	11708	5777	14639
136+50	13650	50	136	0	2	227	774	0	2	719	21343	11711	6568	16200
136+58	13658	8	33	0	11	288	25	0	2	76	21368	11713	6652	16307
137+00	13700	42	354	0	0	297	301	0	9	455	21669	11724	7152	17097
137+50	13750	50	628	0	0	966	910	0	0	1169	22579	11724	8438	19293
138+00	13800	50	620	0	0	109	1156	0	0	995	23734	11724	9533	21544
138+50	13850	50	542	0	0	217	1076	0	0	302	24811	11724	9865	22952
139+00	13900	50	303	0	0	198	783	0	0	384	25593	11725	10288	24157
139+50	13950	50	234	0	13	132	497	0	12	306	26091	11740	10624	24975
139+75	13975	25	63	0	23	263	137	0	17	183	26228	11761	10825	25292
140+00	14000	25	260	0	14	0	149	0	17	122	26377	11782	10959	25554
140+50	14050	50	340	0	42	0	556	0	52	0	26933	11847	10959	26045
141+00	14100	50	383	0	62	0	669	0	96	0	27602	11967	10959	26594
141+50	14150	50	329	0	103	0	659	0	153	0	28261	12158	10959	27062
142+00	14200	50	277	0	113	0	561	0	200	0	28822	12408	10959	27373
142+50	14250	50	181	0	49	0	424	0	150	0	29247	12595	10959	27611
143+00	14300	50	186	0	95	0	340	0	133	0	29587	12761	10959	27785
143+50	14350	50	276	0	93	0	428	0	174	0	30015	12979	10959	27996
144+00	14400	50	109	0	268	0	357	0	334	0	30371	13397	10959	27934
144+50	14450	50	39	0	283	0	137	0	511	0	30509	14035	10959	27433
145+00	14500	50	41	0	320	0	74	0	559	0	30583	14734	10959	26809
145+08	14508	8	52	0	334	0	14	0	97	0	30597	14855	10959	26701
145+50	14550	42	113	0	294	0	129	0	489	0	30725	15466	10959	26219
146+00	14600	50	183	0	203	0	274	0	461	0	31000	16042	10959	25918
146+50	14650	50	352	0	124	0	495	0	303	0	31495	16420	10959	26034
147+00	14700	50	524	0	47	0	811	0	158	0	32306	16617	10959	26648
147+50	14750	50	310	0	0	354	772	0	43	328	33079	16672	11320	27727
148+00	14800	50	206	0	0	661	478	0	0	940	33557	16672	12354	29239
148+50	14850	50	477	0	0	792	633	0	0	1345	34189	16672	13834	31351
148+94	14894	44	943	0	0	811	1157	0	0	1306	35346	16672	15270	33945
149+00	14900	50	1108	0	0	709	1899	0	0	1427	37246	16672	16840	37414
149+50	14950	50	1372	0	0	822	2296	0	0	1418	39542	16672	18400	41270
150+00	15000	50	1744	0	0	823	2885	0	0	1523	42427	16672	20075	45830
150+15	15015	15	1829	0	0	823	993	0	0	457	43419	16672	20578	47326
150+50	15050	35	1722	0	0	847	2302	0	0	1082	45721	16672	21769	50818
151+00	15100	50	1354	0	5	1152	2849	0	5	1851	48570	16678	23805	55697
151+35	15135	35	1212	0	15	739	1663	0	13	1226	50233	16695	25153	58691
151+44	15144	9	998	0	22	690	368	0	6	238	50601	16702	25415	59314
151+81	15181	37	615	0	0	78	1105	0	15	526	51706	16721	25994	60979
151+88	15188	7	418	0	0	110	134	0	0	24	51840	16721	26020	61139
152+02	15202	14	156	0	64	106	149	0	16	56	51989	16742	26082	61329
152+09	15209	7	89	0	147	57	32	0	27	21	52021	16776	26105	61350
152+42	15242	33	89	0	147	57	109	0	180	70	52130	17001	26182	61311
B-33-123						0								
							52130	0	13601	23802				

9 9

PROJECT NO:5648-00-72 | HWY:CTH D | COUNTY:LAFAYETTE | EARTHWORK | SHEET E

FILE NAME : P:\2300s\2390s\2398\02398000\CADD\Plansht s\Earthwork.dgn PLOT DATE : 5/30/2012 PLOT BY : jkurten PLOT NAME : PLOT SCALE : 1:200 WISDOT/CADDS SHEET 49

Earthwork.dgn 5/30/2012 8:06:41 AM jkurten

EARTHWORK PROJECT I.D. 5648-00-72

STATION	Real Station	Distance	AREA (SF) Cut	AREA (SF) Salvaged / Unusable Pavement Material	AREA (SF) Fill	AREA (SF) Rock Exc	Incremental Vol (CY) (Unadjusted) Cut Note 1	Incremental Vol (CY) (Unadjusted) Salvaged / Unusable Pavement Material Note 2	Incremental Vol (CY) (Unadjusted) Fill Note 3	Incremental Vol (CY) (Unadjusted) Rock Exc	Cumulative Vol (CY) Cut 1.00 Note 1	Cumulative Vol (CY) Expanded Fill 1.25	Cumulative Vol (CY) Expanded Rock 1.10	Mass Ordinate Note 14
B-33-123														
153+22	15322	20	0	0	876	0	0	0	649	0	0	811	0	-811
153+52	15352	30	0	0	876	0	0	0	973	0	0	2027	0	-2027
153+63	15363	41	0	0	881	0	0	0	1334	0	0	3695	0	-3695
153+73	15373	10	0	0	910	0	0	0	332	0	0	4110	0	-4110
153+84	15384	11	0	0	946	0	0	0	378	0	0	4582	0	-4582
154+26	15426	42	0	0	1083	0	0	0	1578	0	0	6554	0	-6554
154+37	15437	11	0	0	1101	0	0	0	445	0	0	7110	0	-7110
154+50	15450	13	0	0	1096	0	0	0	529	0	0	7771	0	-7771
155+00	15500	50	0	0	1038	0	0	0	1976	0	0	10241	0	-10241
155+46	15546	46	0	0	986	0	0	0	1724	0	0	12396	0	-12396
155+50	15550	4	0	0	967	0	0	0	145	0	0	12576	0	-12576
155+57	15557	7	0	0	983	0	0	0	253	0	0	12893	0	-12892
156+00	15600	43	0	0	963	0	0	0	1550	0	0	14830	0	-14830
156+50	15650	50	0	0	1002	0	0	0	1819	0	0	17105	0	-17105
157+00	15700	50	6	0	631	0	6	0	1512	0	6	18994	0	-18988
157+50	15750	50	42	0	246	0	45	0	812	0	50	20010	0	-19959
158+00	15800	50	161	0	160	0	188	0	376	0	238	20480	0	-20242
158+42	15842	42	278	0	128	0	341	0	224	0	579	20760	0	-20181
158+50	15850	8	277	0	127	0	82	0	38	0	661	20807	0	-20146
159+00	15900	50	126	0	144	0	373	0	252	0	1035	21122	0	-20087
159+50	15950	50	12	0	188	0	128	0	308	0	1163	21506	0	-20343
160+00	16000	50	0	0	137	0	11	0	301	0	1174	21882	0	-20708
160+50	16050	50	15	0	44	0	14	0	167	0	1187	22091	0	-20903
161+00	16100	50	113	0	7	0	118	0	47	0	1306	22150	0	-20844
161+50	16150	50	151	0	0	0	244	0	7	0	1549	22158	0	-20609
161+61	16161	11	160	0	0	0	63	0	0	0	1613	22158	0	-20546
162+00	16200	39	136	0	0	0	214	0	0	0	1827	22158	0	-20332
162+50	16250	50	130	0	0	0	246	0	0	0	2073	22158	0	-20086
163+00	16300	50	156	0	0	0	265	0	0	0	2337	22158	0	-19821
163+05	16305	5	156	0	0	0	29	0	0	0	2366	22158	0	-19792
							2366	0	17727	0				

9

9

EARTHWORK PROJECT I.D. 5648-00-72

STATION	Real Station	Distance	AREA (SF) Cut	AREA (SF) Salvaged / Unusable Pavement Material	AREA (SF) Fill	AREA (SF) Rock Exc	Incremental Vol (CY) (Unadjusted) Cut Note 1	Incremental Vol (CY) (Unadjusted) Salvaged / Unusable Pavement Material Note 2	Incremental Vol (CY) (Unadjusted) Fill Note 3	Incremental Vol (CY) (Unadjusted) Rock Exc	Cumulative Vol (CY) Cut 1.00 Note 1	Cumulative Vol (CY) Expanded Fill 1.25	Cumulative Vol (CY) Expanded Rock 1.10	Mass Ordinate Note 14
200+75			199	0	306	0								
201+00	20100	25	279	0	138	0	221	0	205	0	221	257	0	-35
201+50	20150	50	34	0	153	0	290	0	269	0	512	593	0	-81
202+00	20200	100	0	0	126	0	64	0	516	0	576	1239	0	-663
202+38	20238	38	0	0	187	0	0	0	220	0	576	1514	0	-938
202+50	20250	12	0	0	199	0	0	0	86	0	576	1621	0	-1045
202+65	20265	15	0	0	120	0	0	0	88	0	576	1731	0	-1156
203+00	20300	35	3	0	44	0	2	0	106	0	577	1864	0	-1287
203+50	20350	50	51	0	3	0	50	0	43	0	627	1918	0	-1291
204+00	20400	50	44	0	0	0	88	0	2	0	715	1922	0	-1207
							715	0	1537	0				

9

9

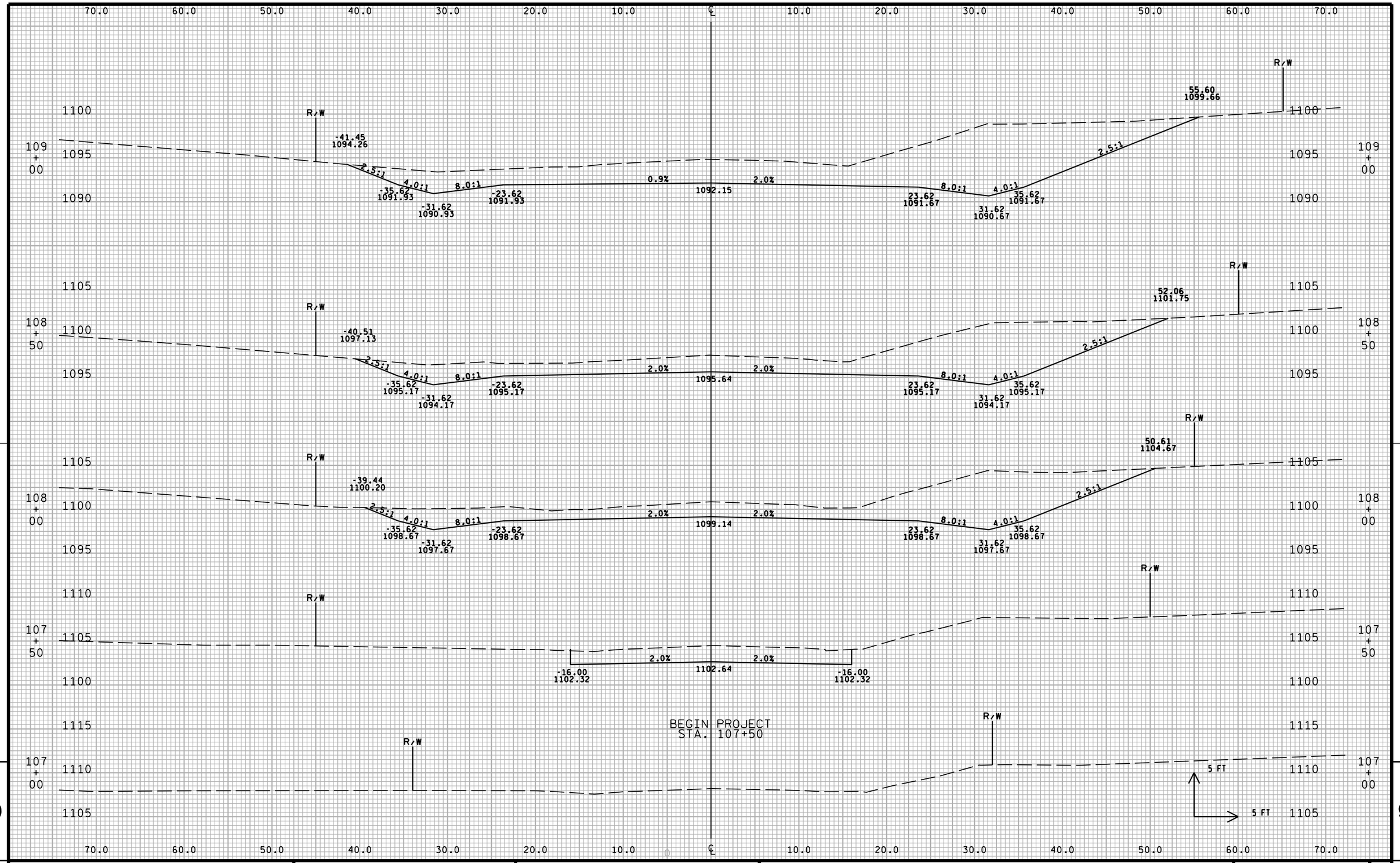

PROJECT NO:5648-00-72	HWY:CTH D	COUNTY: LAFAYETTE	CROSS SECTIONS:	SHEET 135	E

FILE NAME : $$....designfile....$$ PLOT DATE : $$...plottingdate...$$ PLOT BY : $$...plotuser...$$ PLOT NAME : PLOT SCALE : $$.....plotscale.....$$ WISDOT/CADDS SHEET 21

9 9

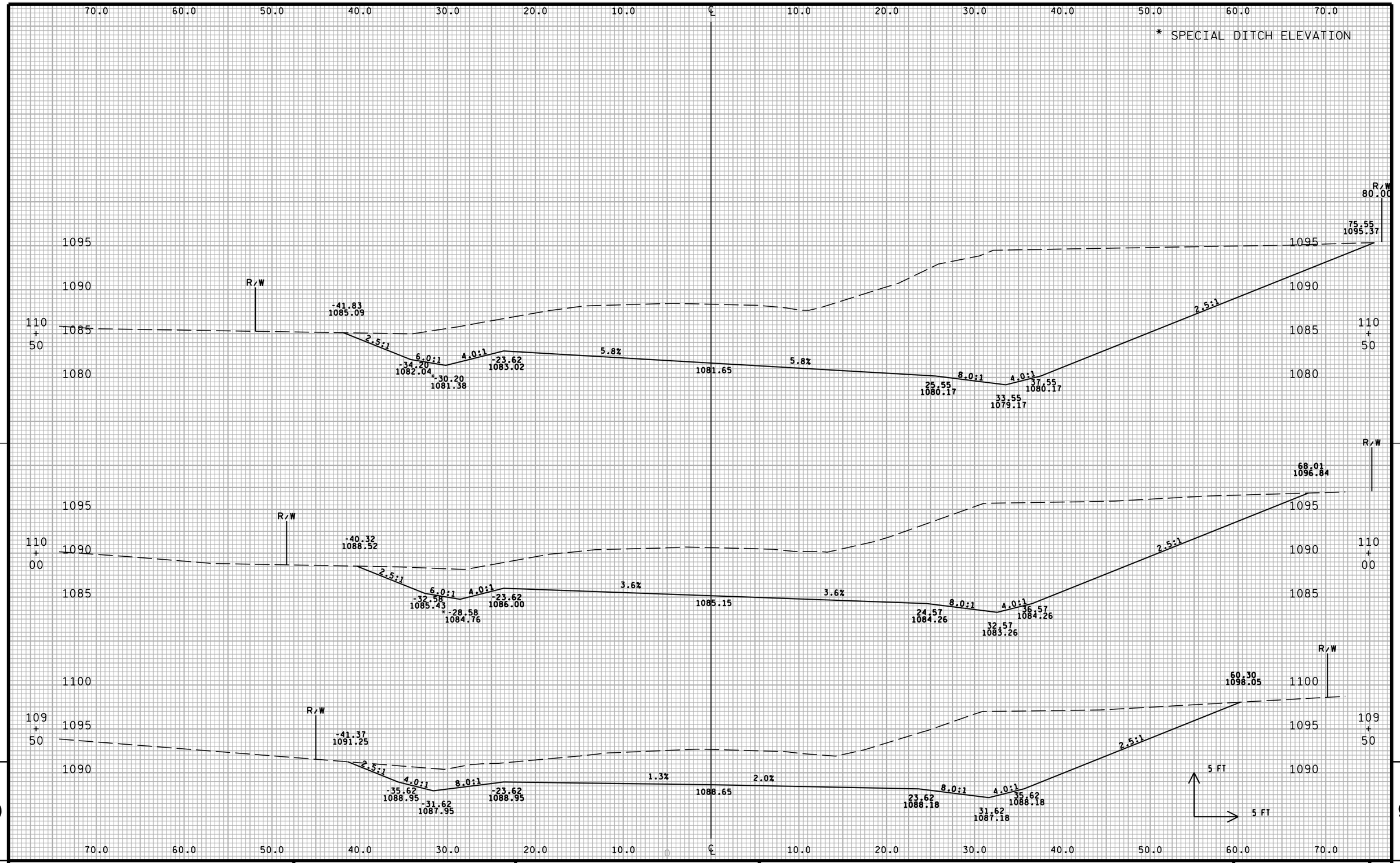

PROJECT NO:5648-00-72	HWY:CTH D	COUNTY: LAFAYETTE	CROSS SECTIONS:	SHEET 136	E

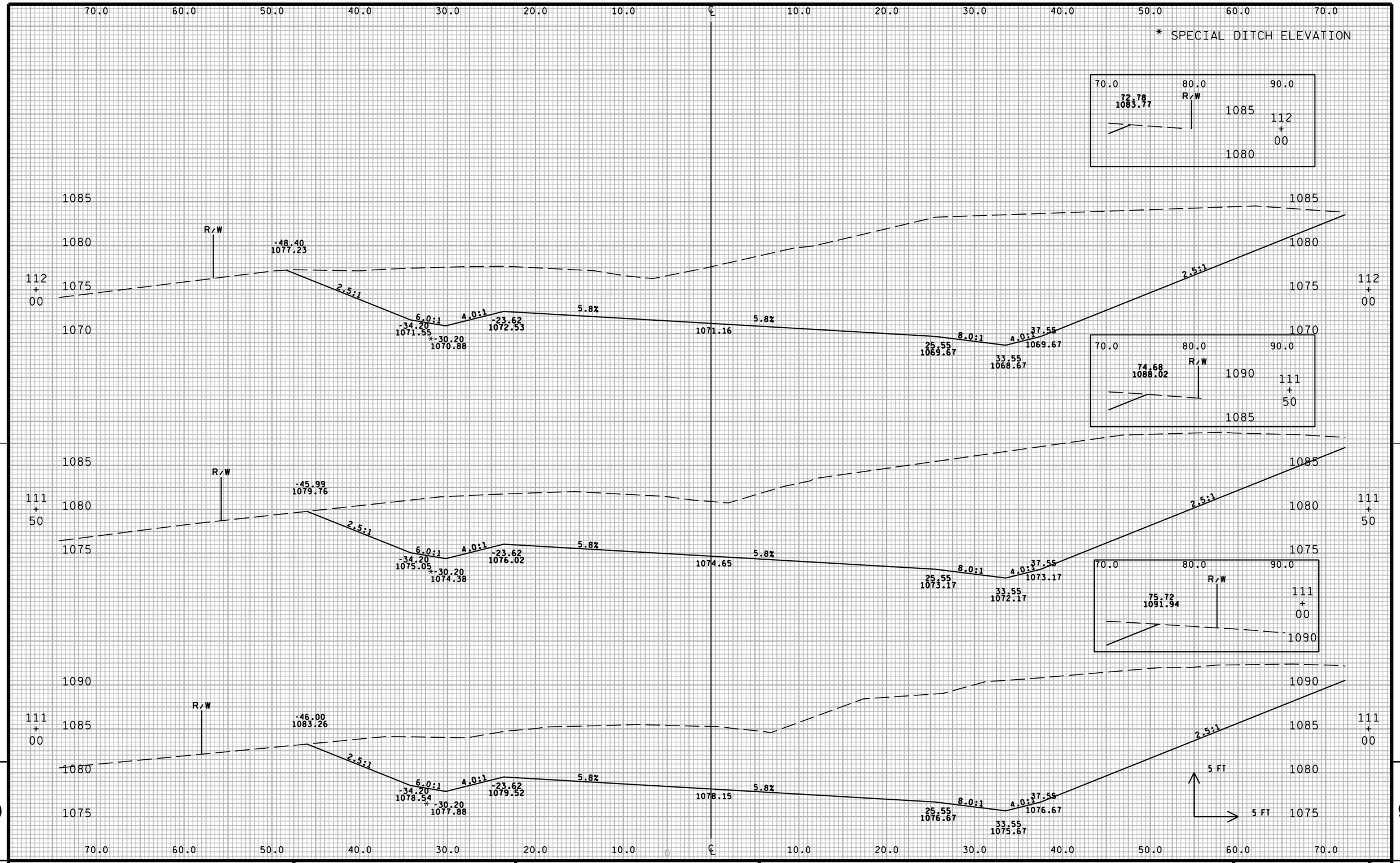

PROJECT NO:5648-00-72	HWY:CTH D	COUNTY: LAFAYETTE	CROSS SECTIONS:	SHEET 137	E

FILE NAME : $$....designfile....$$ PLOT DATE : $$...plottingdate...$$ PLOT BY : $$...plotuser...$$ PLOT NAME : PLOT SCALE : $$.....plotscale.....$$ WISDOT/CADDS SHEET 21

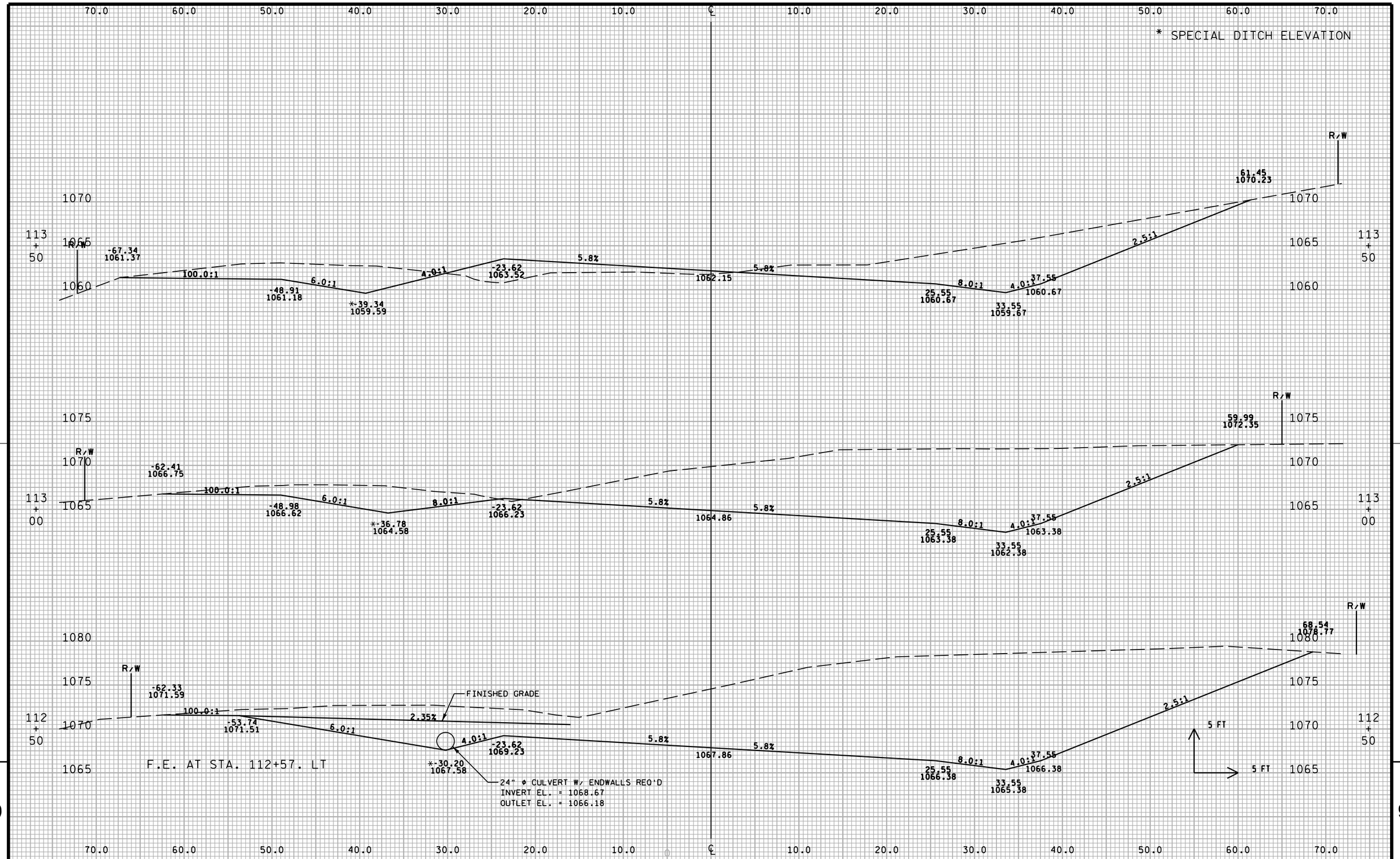

9

9

PROJECT NO:5648-00-72	HWY:CTH D	COUNTY: LAFAYETTE	CROSS SECTIONS:	SHEET 138	E

FILE NAME : $$....designfile....$$ PLOT DATE : $$...plottingdate...$$ PLOT BY : $$...plotuser...$$ PLOT NAME : PLOT SCALE : $$.....plotscale.....$$ WISDOT/CADDS SHEET 21

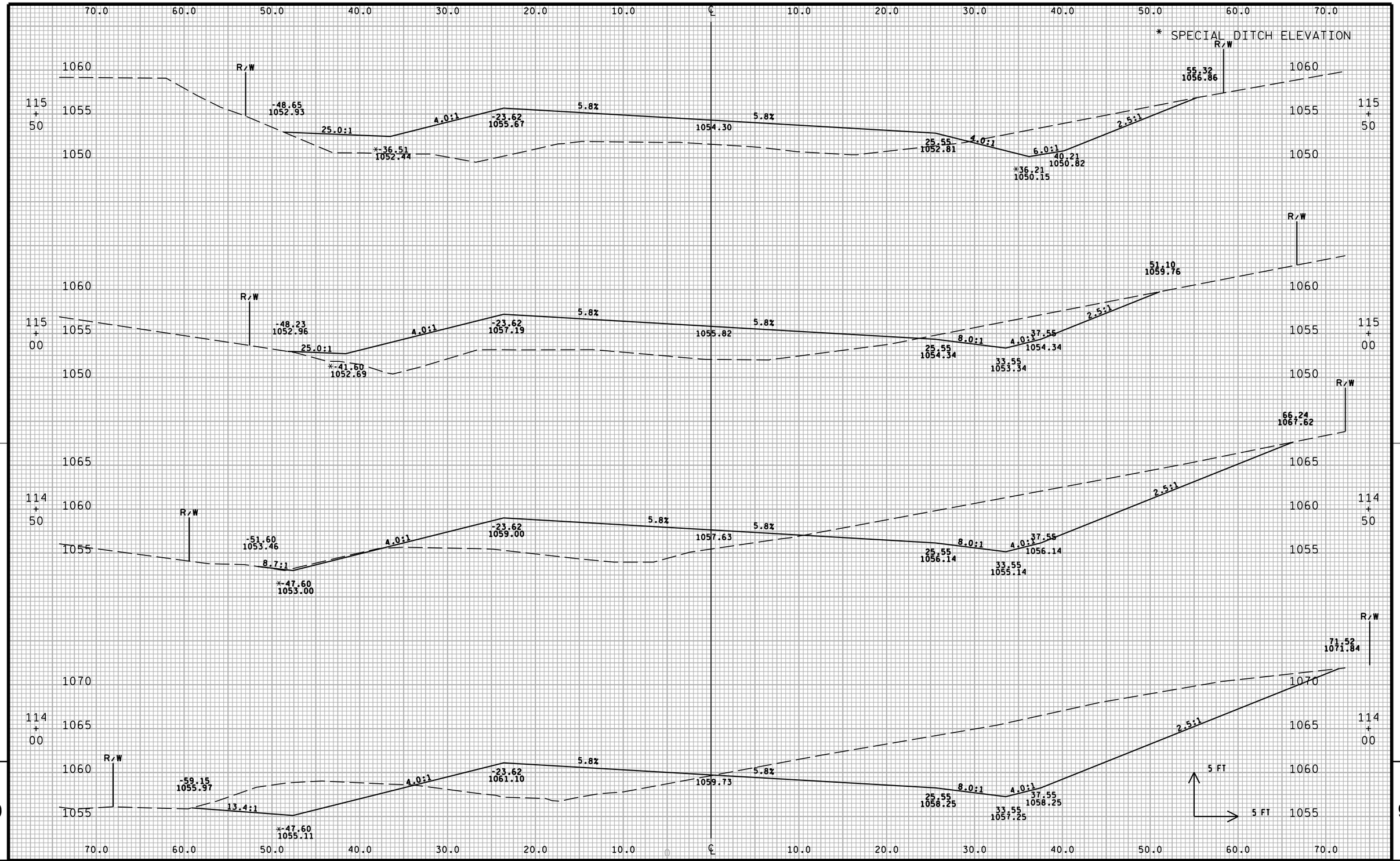

PROJECT NO:5648-00-72	HWY:CTH D	COUNTY: LAFAYETTE	CROSS SECTIONS:	SHEET 139	E

FILE NAME : $$....designfile....$$ PLOT DATE : $$...plottingdate...$$ PLOT BY : $$...plotuser...$$ PLOT NAME : PLOT SCALE : $$.....plotscale.....$$ WISDOT/CADDS SHEET 21

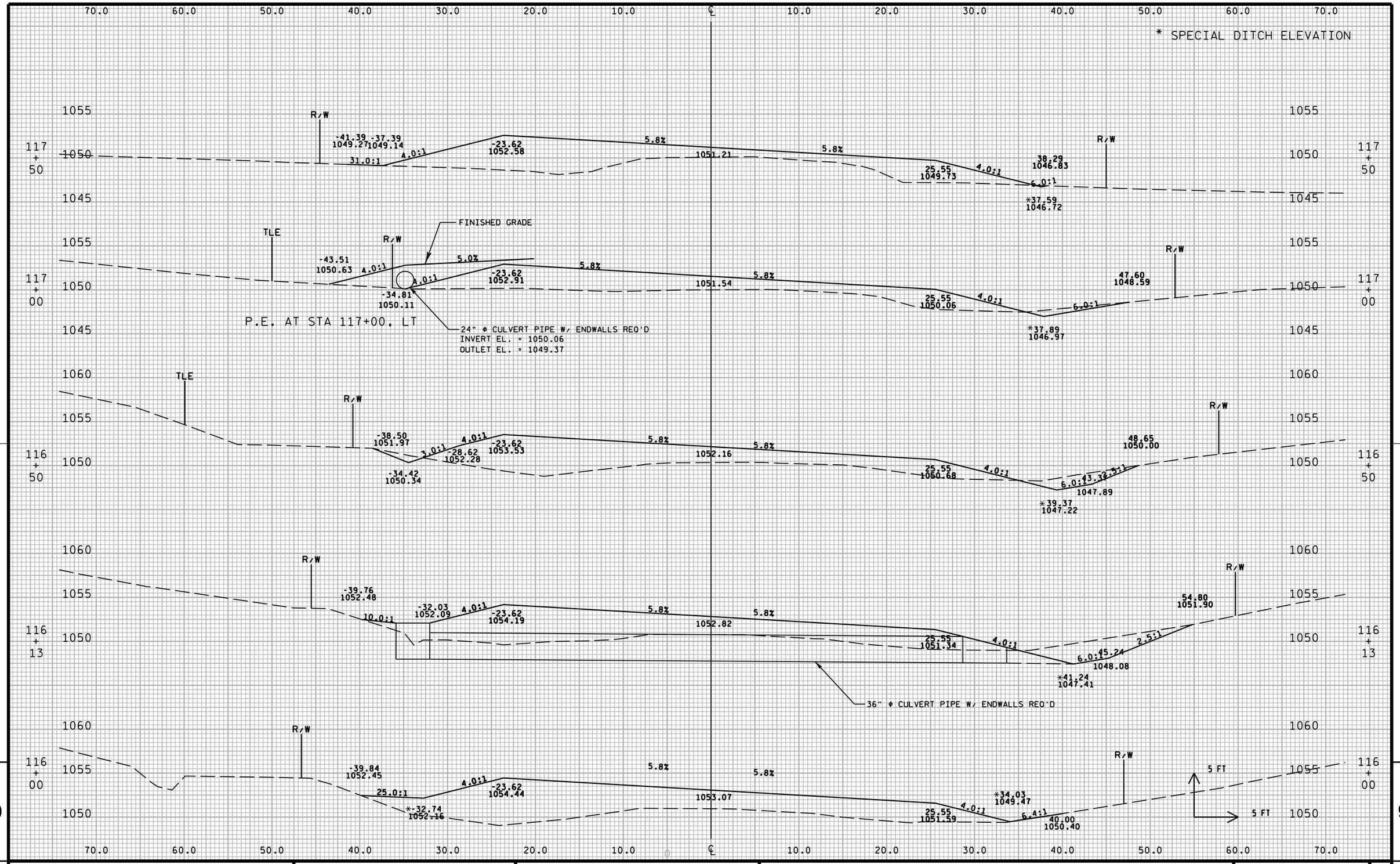

9

PROJECT NO:5648-00-72	HWY:CTH D	COUNTY: LAFAYETTE	CROSS SECTIONS:	SHEET 140	E

FILE NAME : $$....designfile....$$ PLOT DATE : $$...plottingdate...$$ PLOT BY : $$...plotuser...$$ PLOT NAME : PLOT SCALE : $$.....plotscale.....$$ WISDOT/CADDS SHEET 21

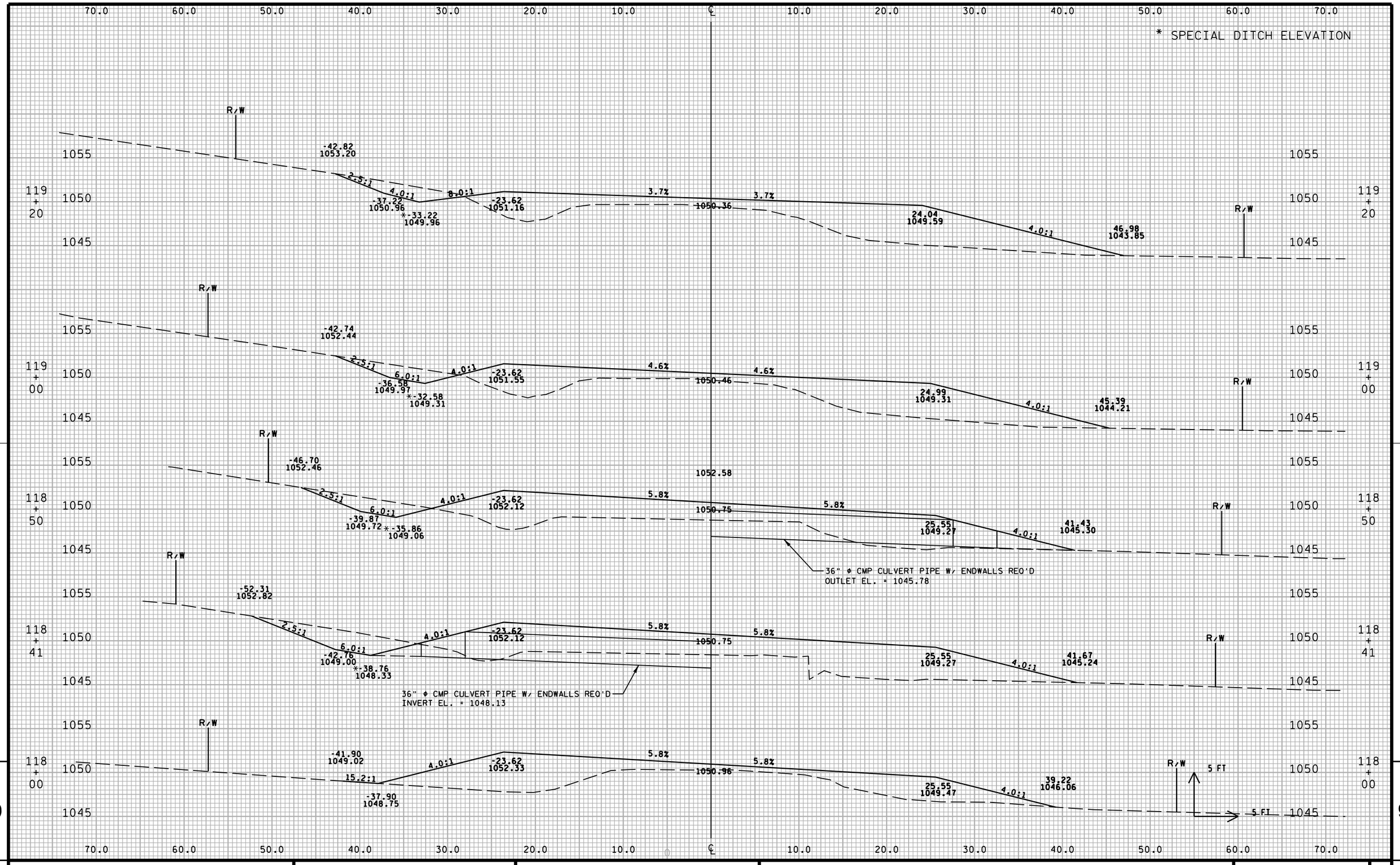

9

9

PROJECT NO:5648-00-72	HWY:CTH D	COUNTY: LAFAYETTE	CROSS SECTIONS:	SHEET 141	E

FILE NAME : $$....designfile....$$ PLOT DATE : $$...plottingdate...$$ PLOT BY : $$...plotuser...$$ PLOT NAME : PLOT SCALE : $$.....plotscale.....$$ WISDOT/CADDS SHEET 21

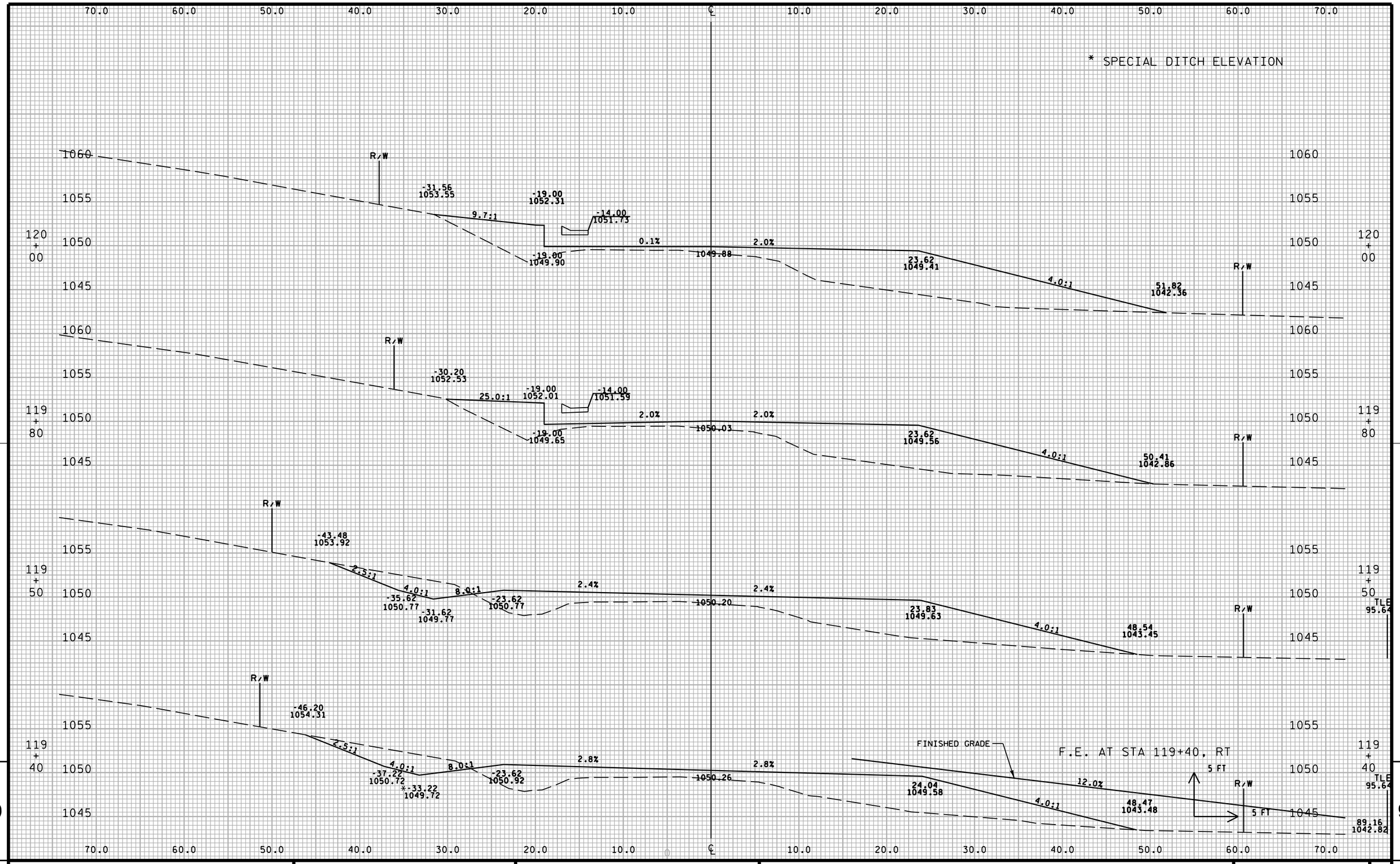

PROJECT NO:5648-00-72	HWY:CTH D	COUNTY: LAFAYETTE	CROSS SECTIONS:	SHEET 142	E

FILE NAME : $$....designfile....$$ PLOT DATE : $$...plottingdate...$$ PLOT BY : $$...plotuser...$$ PLOT NAME : PLOT SCALE : $$.....plotscale.....$$ WISDOT/CADDS SHEET 21

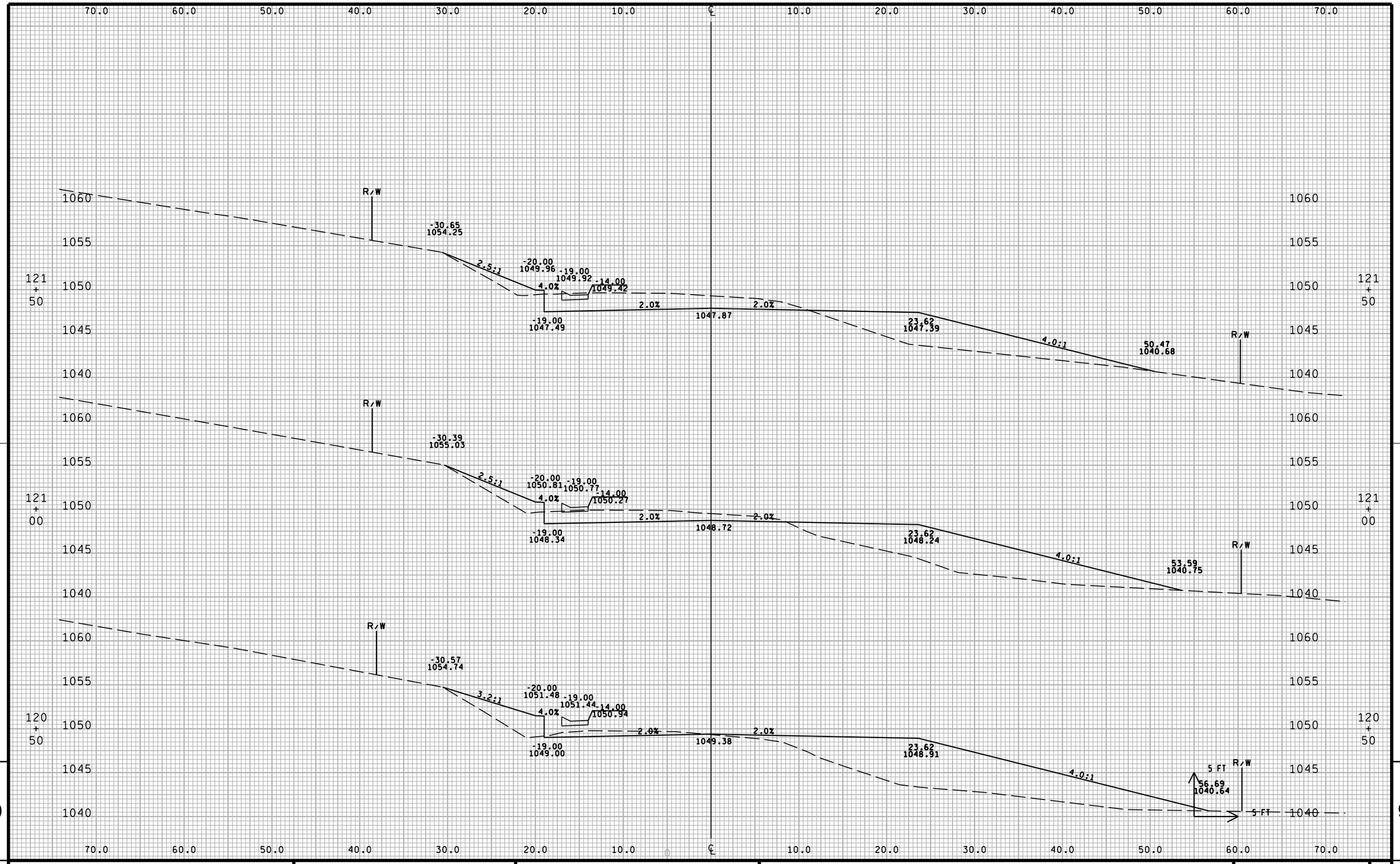

9

PROJECT NO:5648-00-72	HWY:CTH D	COUNTY: LAFAYETTE	CROSS SECTIONS:	SHEET 143	E

FILE NAME : $$....designfile....$$ PLOT DATE : $$...plottingdate...$$ PLOT BY : $$...plotuser...$$ PLOT NAME : PLOT SCALE : $$.....plotscale.....$$ WISDOT/CADDS SHEET 21

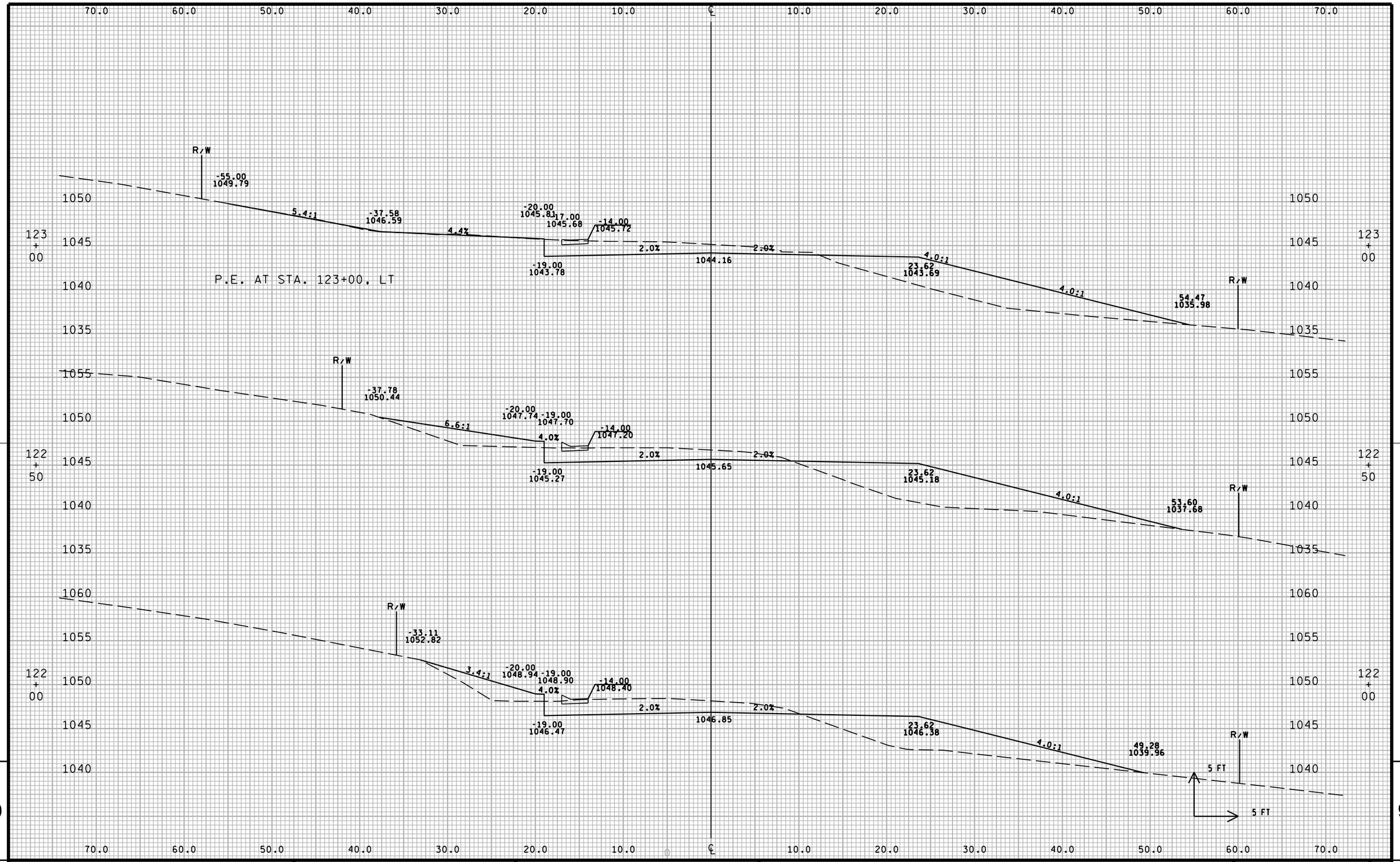

PROJECT NO:5648-00-72	HWY:CTH D	COUNTY: LAFAYETTE	CROSS SECTIONS:	SHEET 144	E

FILE NAME : $$....designfile....$$ PLOT DATE : $$...plottingdate...$$ PLOT BY : $$...plotuser...$$ PLOT NAME : PLOT SCALE : $$.....plotscale.....$$ WISDOT/CADDS SHEET 21

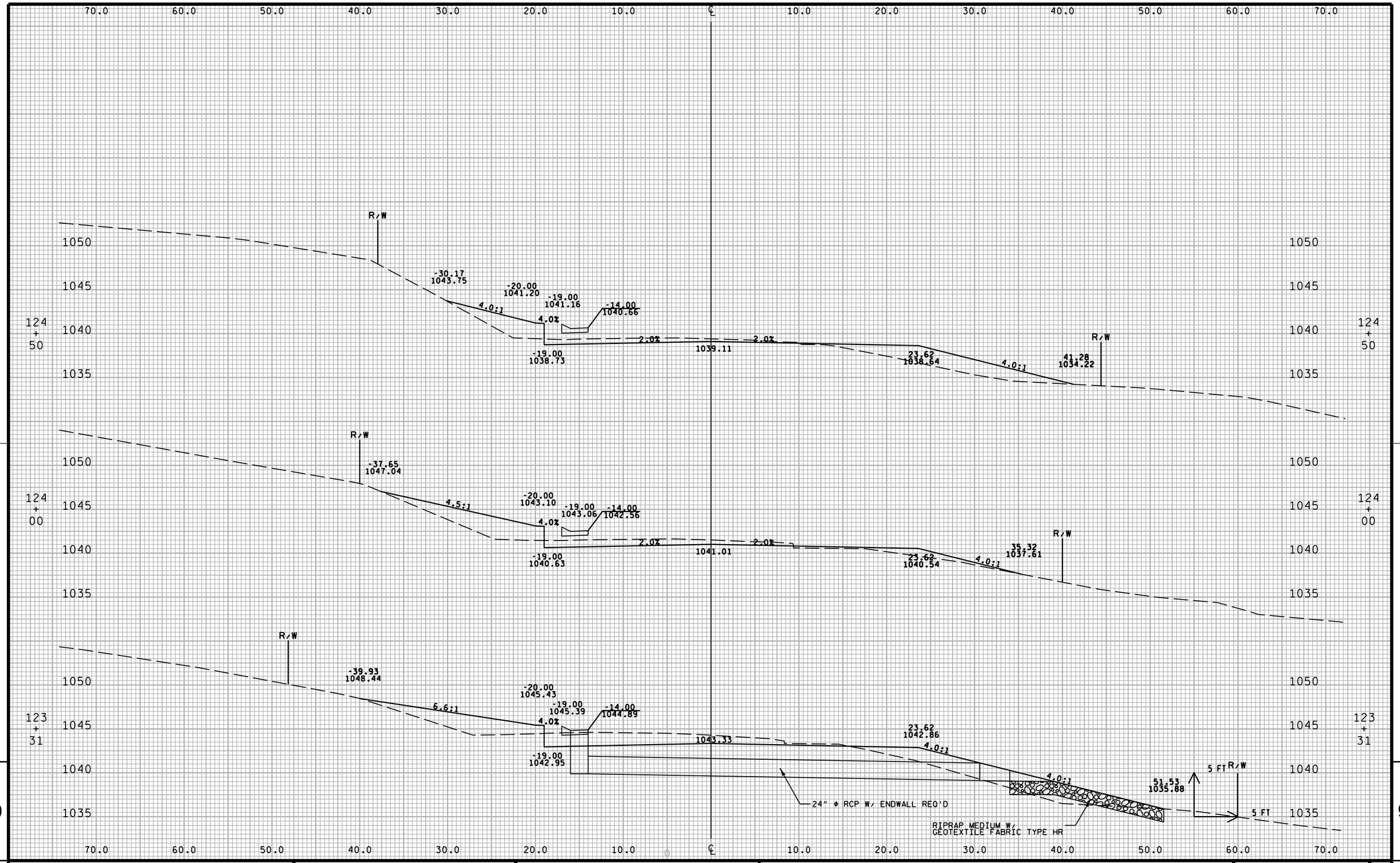

9

PROJECT NO:5648-00-72	HWY:CTH D	COUNTY: LAFAYETTE	CROSS SECTIONS:	SHEET 145	E

FILE NAME : $$....designfile....$$ PLOT DATE : $$...plottingdate...$$ PLOT BY : $$...plotuser...$$ PLOT NAME : PLOT SCALE : $$.....plotscale.....$$ WISDOT/CADDS SHEET 21

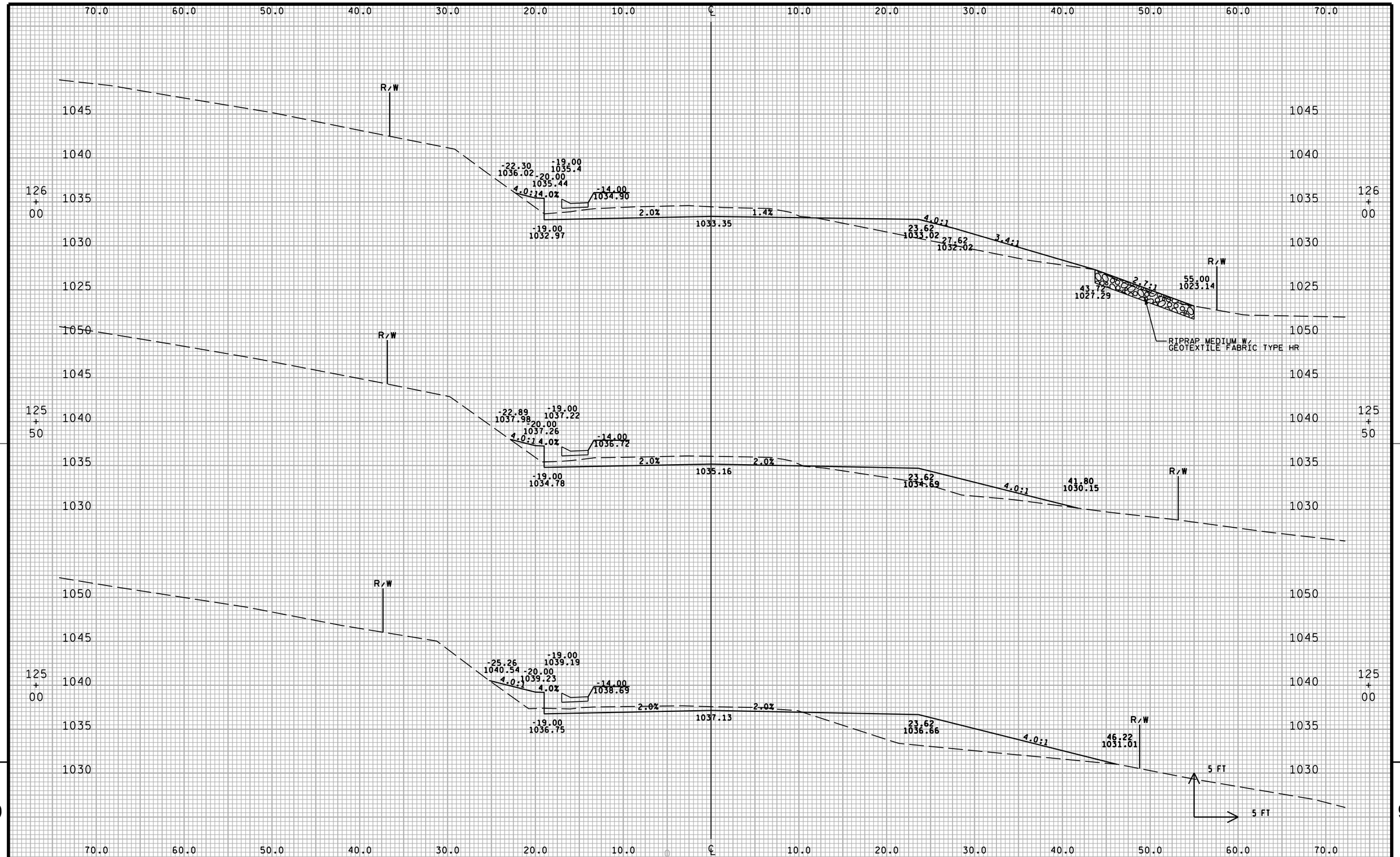

PROJECT NO:5648-00-72	HWY:CTH D	COUNTY: LAFAYETTE	CROSS SECTIONS:	SHEET	E

FILE NAME : $$....designfile....$$ PLOT DATE : $$...plottingdate...$$ PLOT BY : $$...plotuser...$$ PLOT NAME : PLOT SCALE : $$.....plotscale.....$$ WISDOT/CADDS SHEET 21

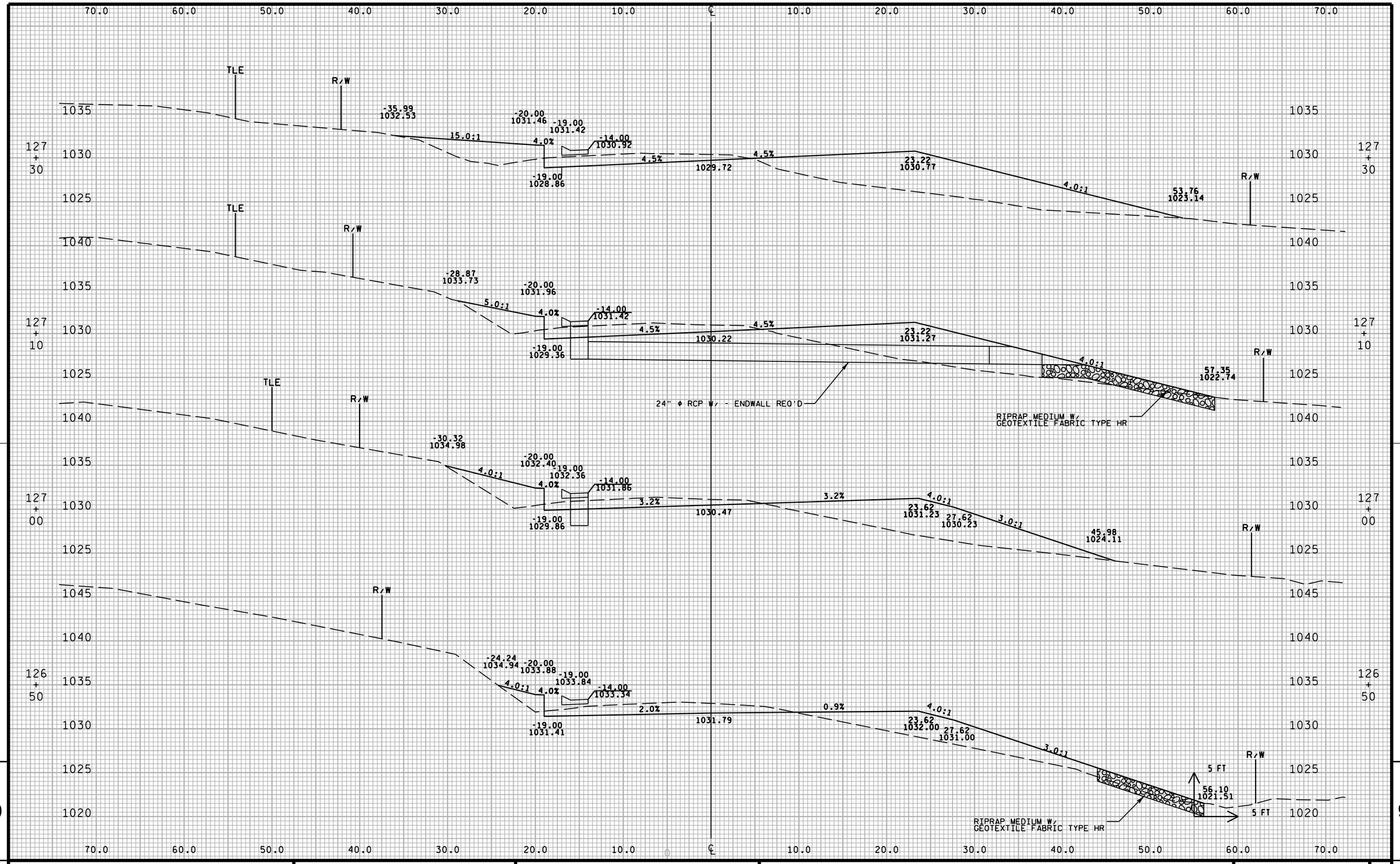

PROJECT NO:5648-00-72	HWY:CTH D	COUNTY: LAFAYETTE	CROSS SECTIONS:	SHEET 147	E

FILE NAME : $$....designfile....$$ PLOT DATE : $$...plottingdate...$$ PLOT BY : $$...plotuser...$$ PLOT NAME : PLOT SCALE : $$.....plotscale.....$$ WISDOT/CADDS SHEET 21

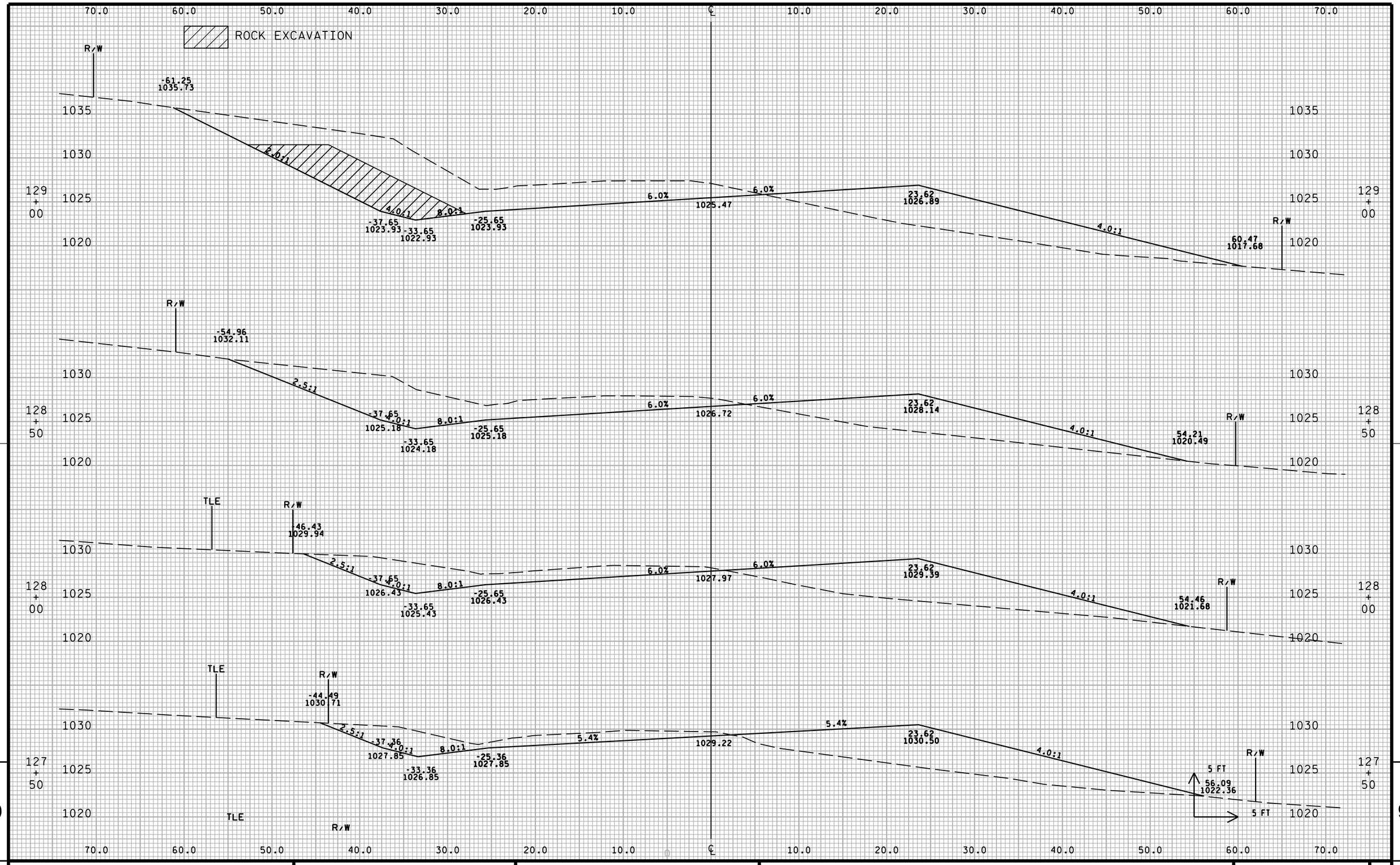

9

9

PROJECT NO:5648-00-72	HWY:CTH D	COUNTY: LAFAYETTE	CROSS SECTIONS:	SHEET 148	E

FILE NAME : $$....designfile....$$ PLOT DATE : $$...plottingdate...$$ PLOT BY : $$...plotuser...$$ PLOT NAME : PLOT SCALE : $$.....plotscale.....$$ WISDOT/CADDS SHEET 21

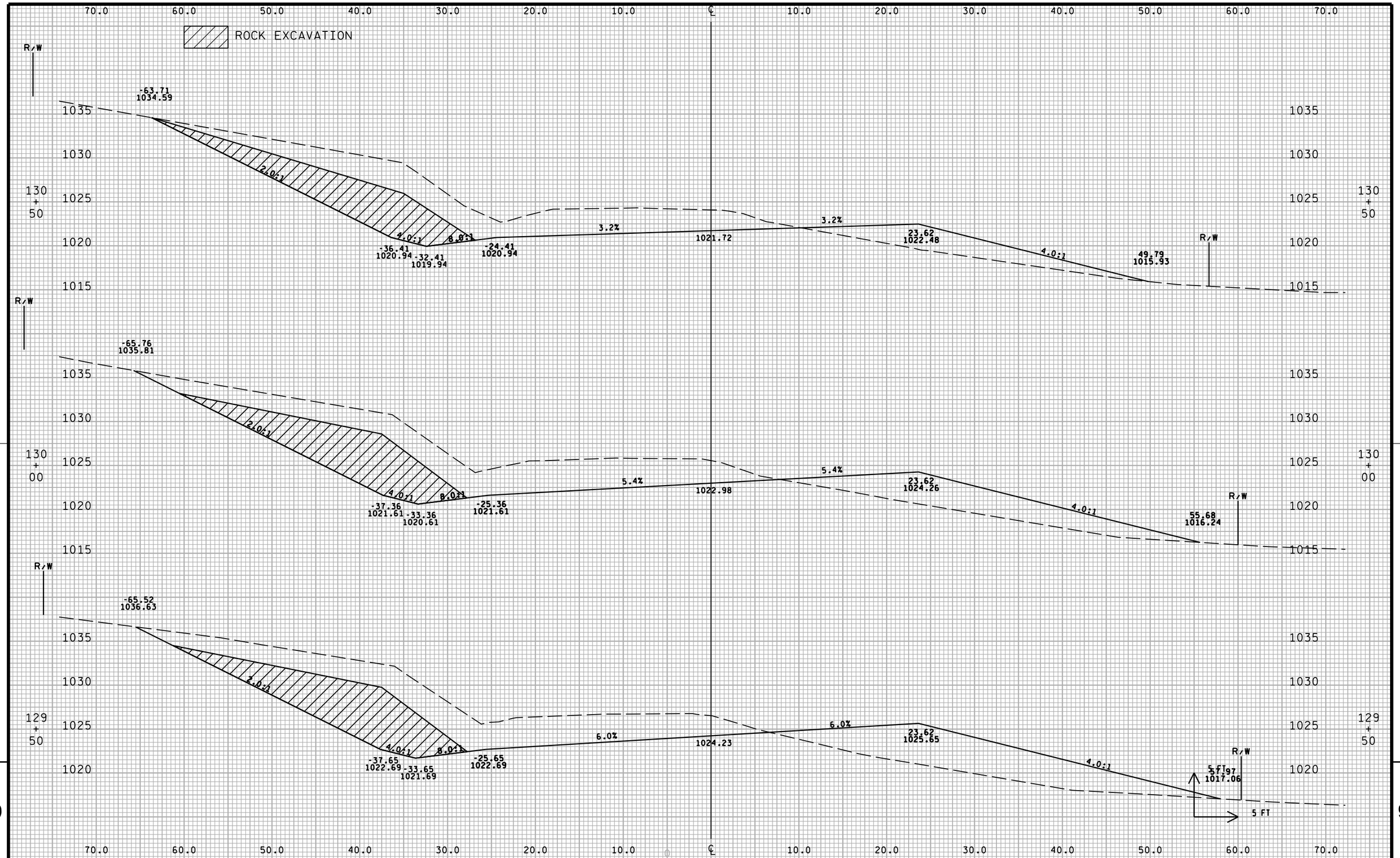

9

9

PROJECT NO:5648-00-72	HWY:CTH D	COUNTY: LAFAYETTE	CROSS SECTIONS:	SHEET 149	E

FILE NAME : $$....designfile....$$ PLOT DATE : $$...plottingdate...$$ PLOT BY : $$...plotuser...$$ PLOT NAME : PLOT SCALE : $$.....plotscale.....$$ WISDOT/CADDS SHEET 21

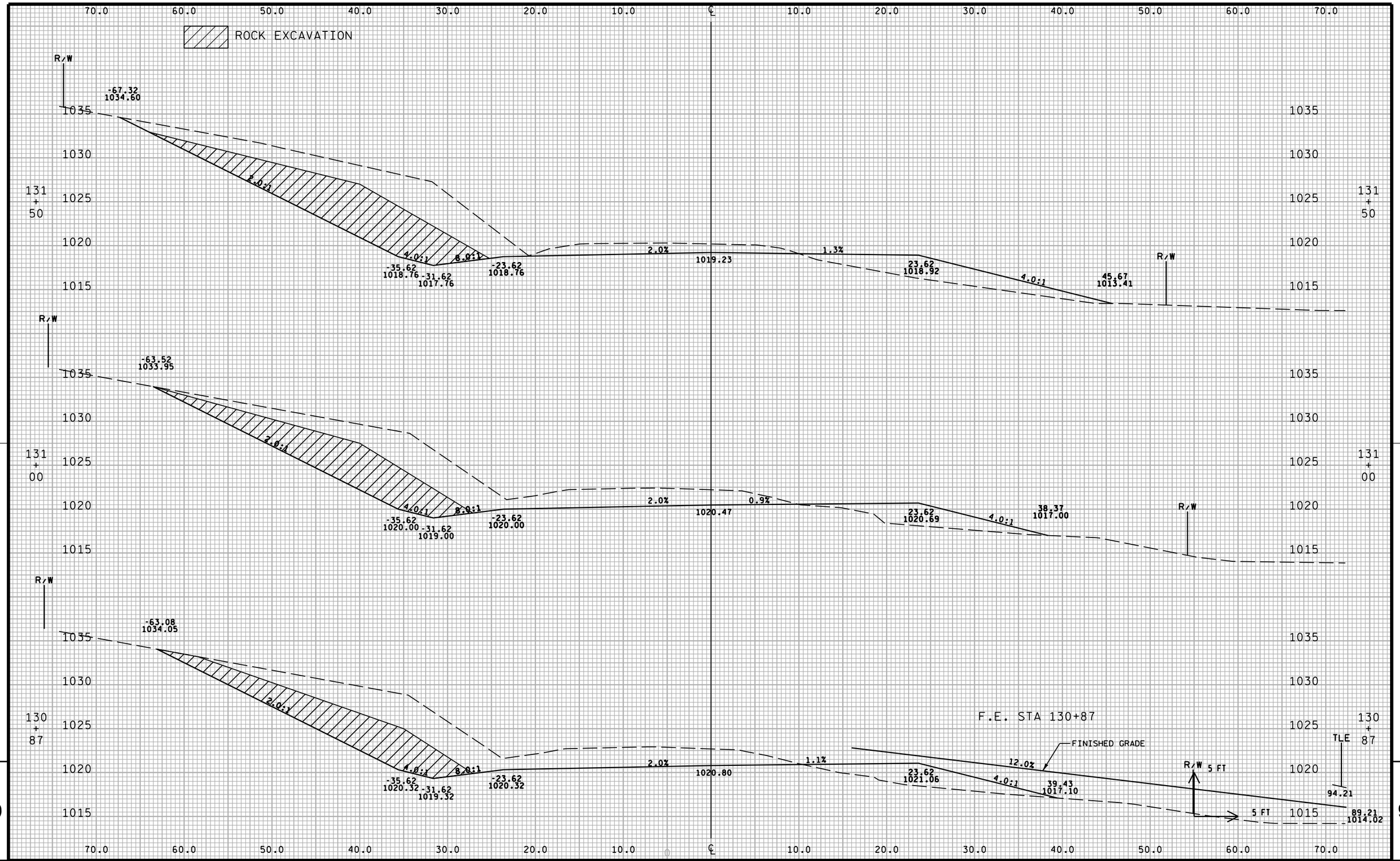

PROJECT NO:5648-00-72	HWY:CTH D	COUNTY: LAFAYETTE	CROSS SECTIONS:	SHEET 150	E

FILE NAME : $$....designfile....$$ PLOT DATE : $$...plottingdate...$$ PLOT BY : $$...plotuser...$$ PLOT NAME : PLOT SCALE : $$.....plotscale.....$$ WISDOT/CADDS SHEET 21

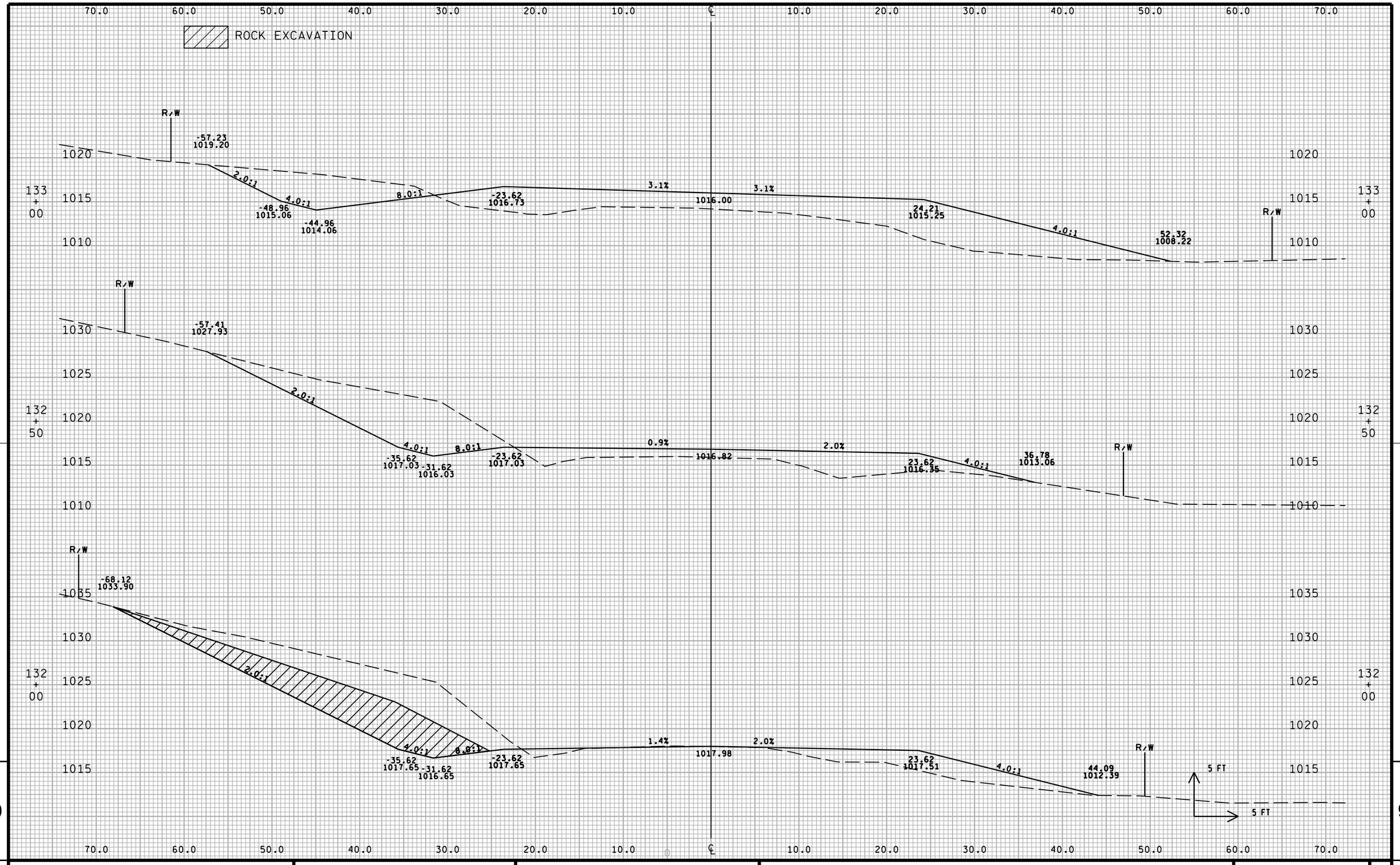

9

PROJECT NO:5648-00-72	HWY:CTH D	COUNTY: LAFAYETTE	CROSS SECTIONS:	SHEET 151	E

FILE NAME : $$....designfile....$$ PLOT DATE : $$...plottingdate...$$ PLOT BY : $$...plotuser...$$ PLOT NAME : PLOT SCALE : $$.....plotscale.....$$ WISDOT/CADDS SHEET 21

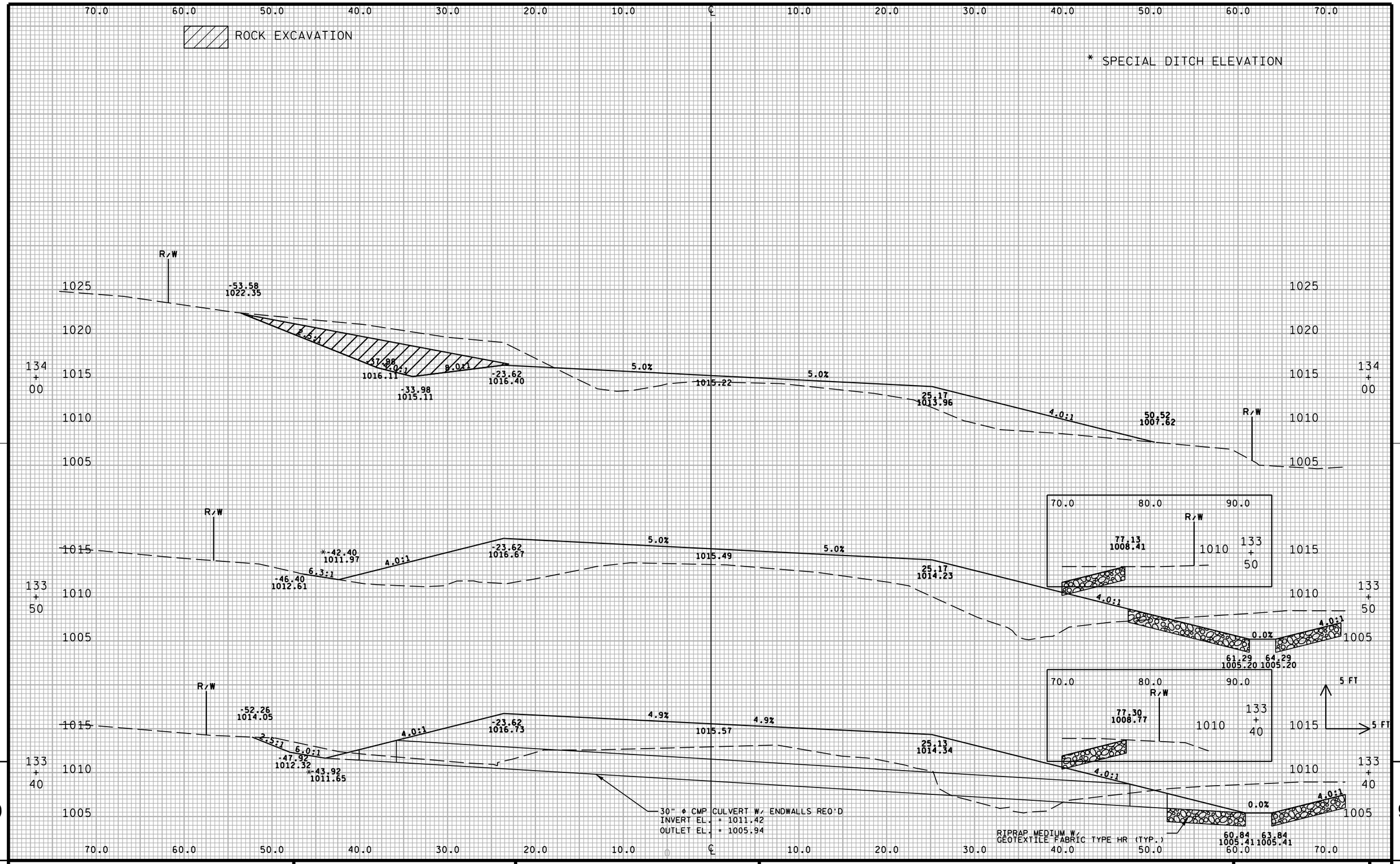

9

PROJECT NO:5648-00-72	HWY:CTH D	COUNTY: LAFAYETTE	CROSS SECTIONS:	SHEET 152	E

FILE NAME : $$....designfile....$$ PLOT DATE : $$...plottingdate...$$ PLOT BY : $$...plotuser...$$ PLOT NAME : PLOT SCALE : $$.....plotscale.....$$ WISDOT/CADDS SHEET 21

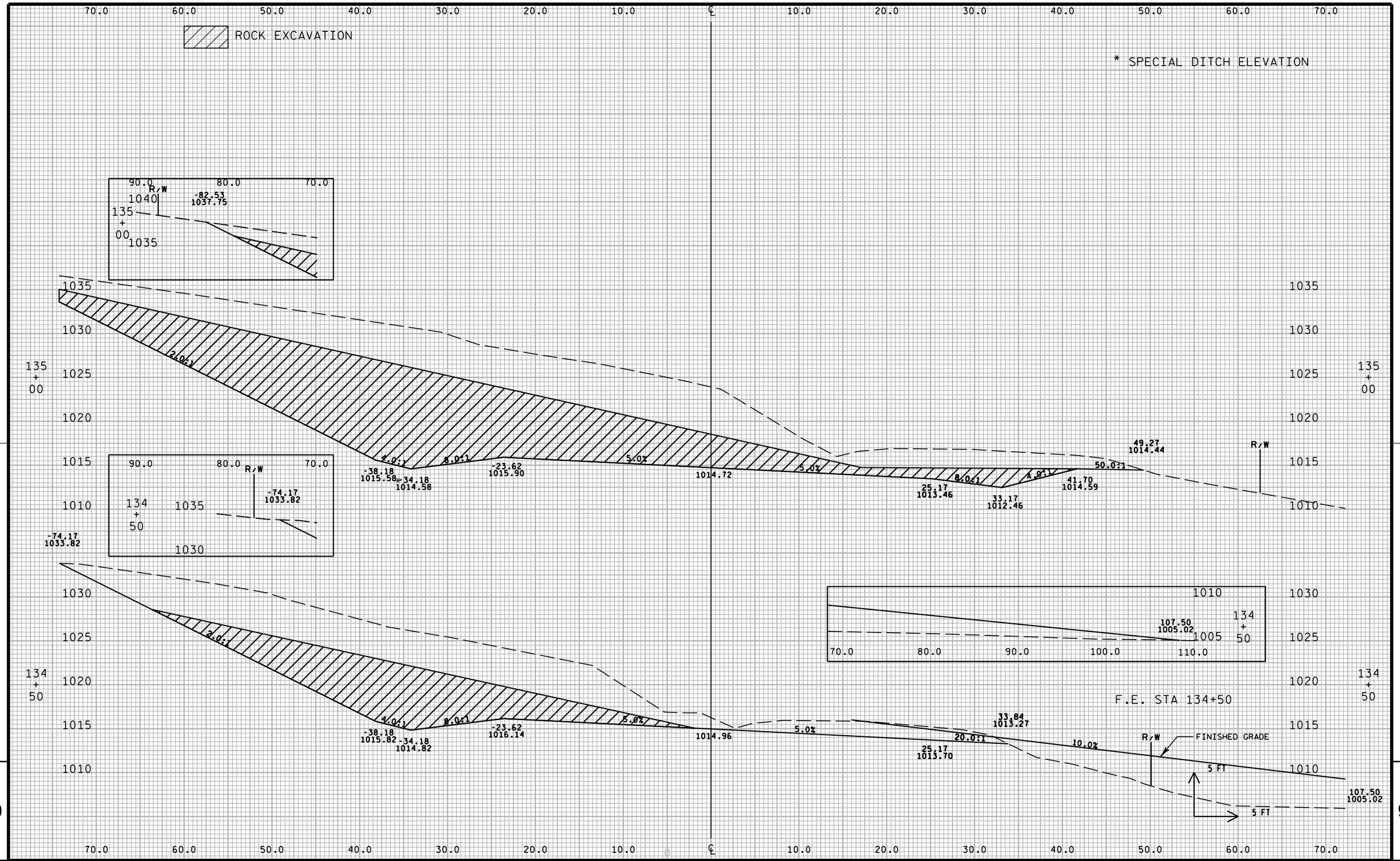

PROJECT NO:5648-00-72	HWY:CTH D	COUNTY: LAFAYETTE	CROSS SECTIONS:	SHEET 153	E

FILE NAME : $$....designfile....$$ PLOT DATE : $$...plottingdate...$$ PLOT BY : $$...plotuser...$$ PLOT NAME : PLOT SCALE : $$.....plotscale.....$$ WISDOT/CADDS SHEET 21

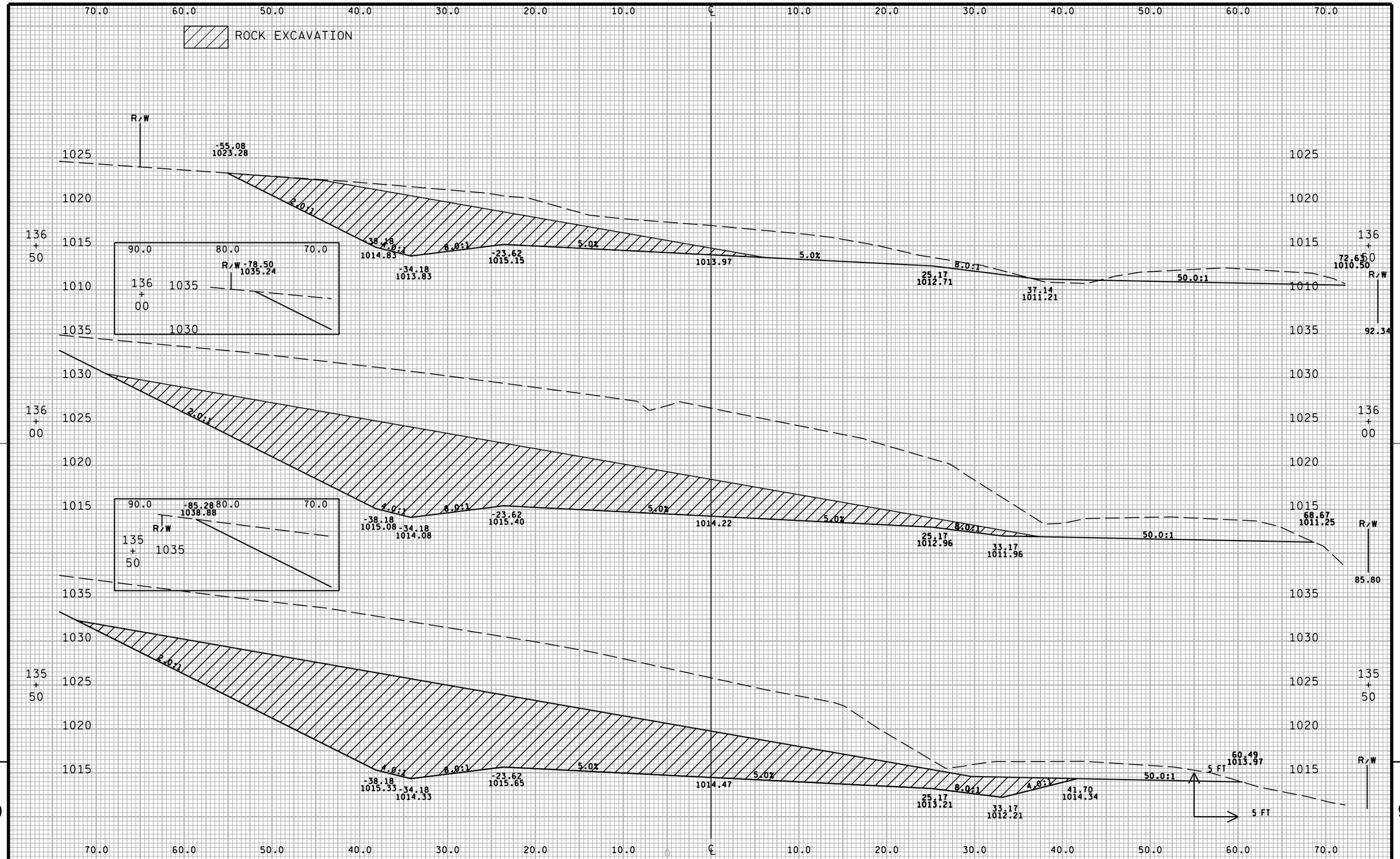

9

PROJECT NO:5648-00-72	HWY:CTH D	COUNTY: LAFAYETTE	CROSS SECTIONS:	SHEET 154	E

FILE NAME : $$....designfile....$$ PLOT DATE : $$...plottingdate...$$ PLOT BY : $$...plotuser...$$ PLOT NAME : PLOT SCALE : $$.....plotscale.....$$ WISDOT/CADDS SHEET 21

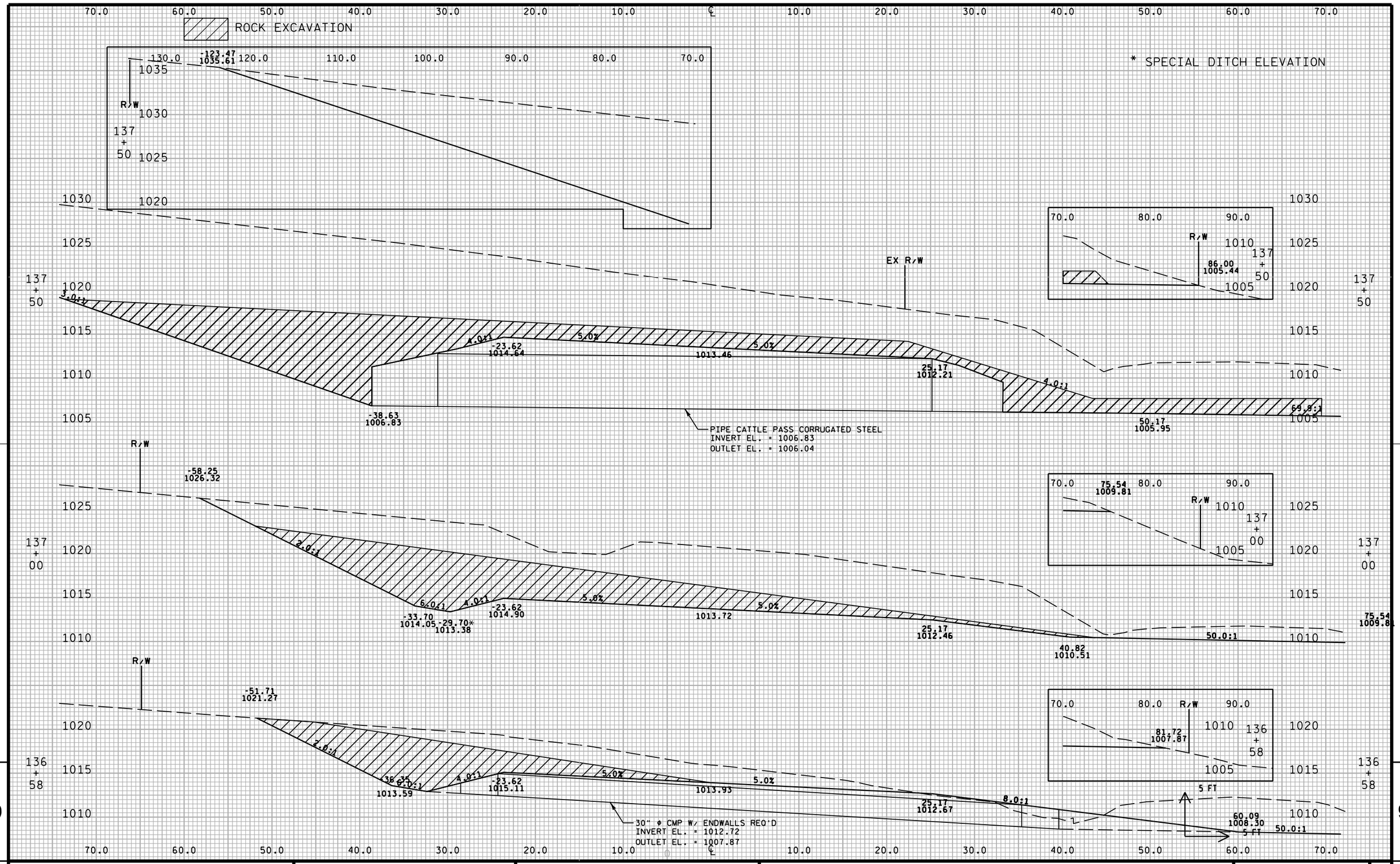

PROJECT NO:5648-00-72	HWY:CTH D	COUNTY: LAFAYETTE	CROSS SECTIONS:	SHEET 155	E

FILE NAME : $$....designfile....$$ PLOT DATE : $$...plottingdate...$$ PLOT BY : $$...plotuser...$$ PLOT NAME : PLOT SCALE : $$.....plotscale.....$$ WISDOT/CADDS SHEET 21

9 9

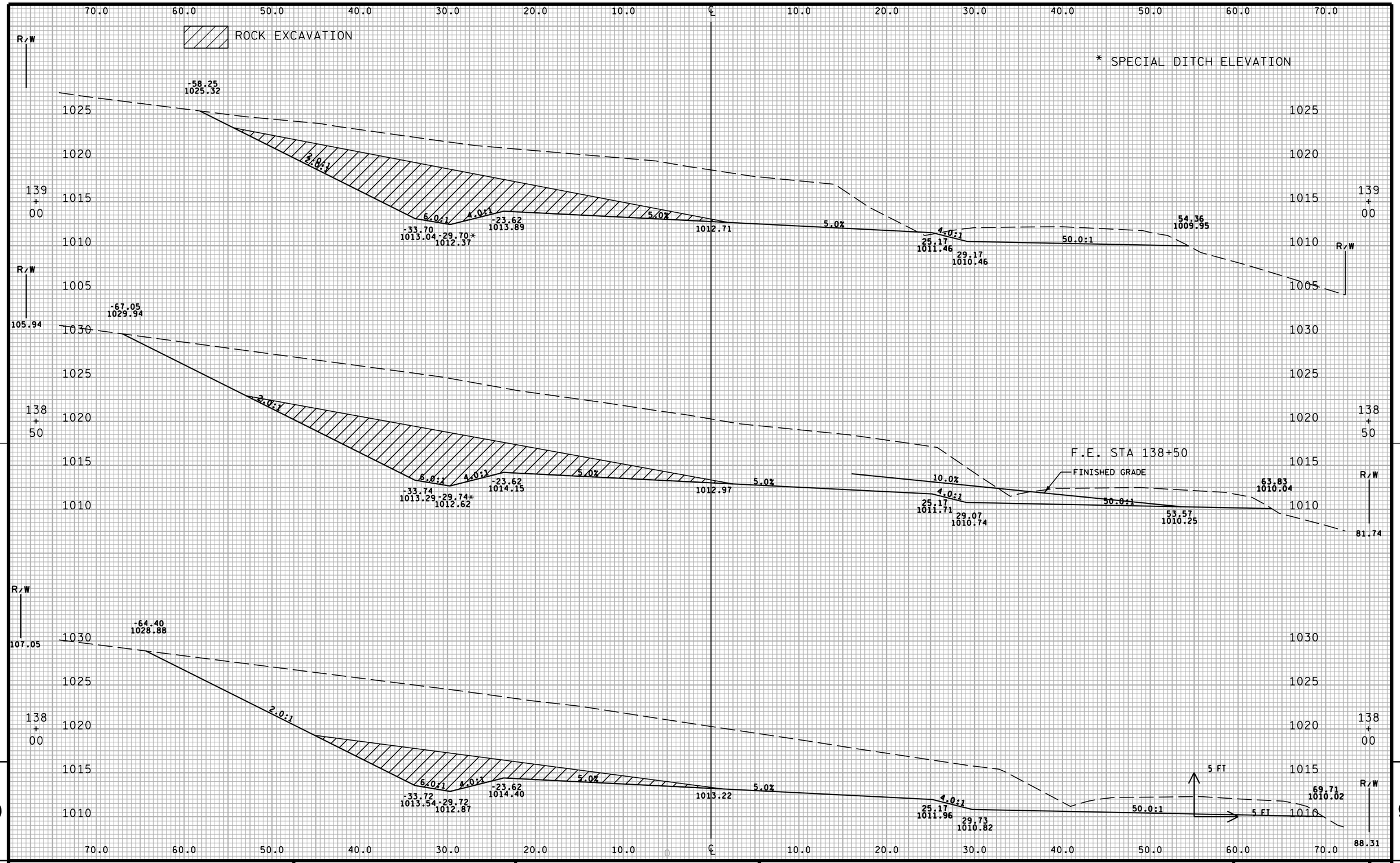

PROJECT NO:5648-00-72	HWY:CTH D	COUNTY: LAFAYETTE	CROSS SECTIONS:	SHEET 156	E

FILE NAME : $$....designfile....$$ PLOT DATE : $$...plottingdate...$$ PLOT BY : $$...plotuser...$$ PLOT NAME : PLOT SCALE : $$.....plotscale.....$$ WISDOT/CADDS SHEET 21

9 9

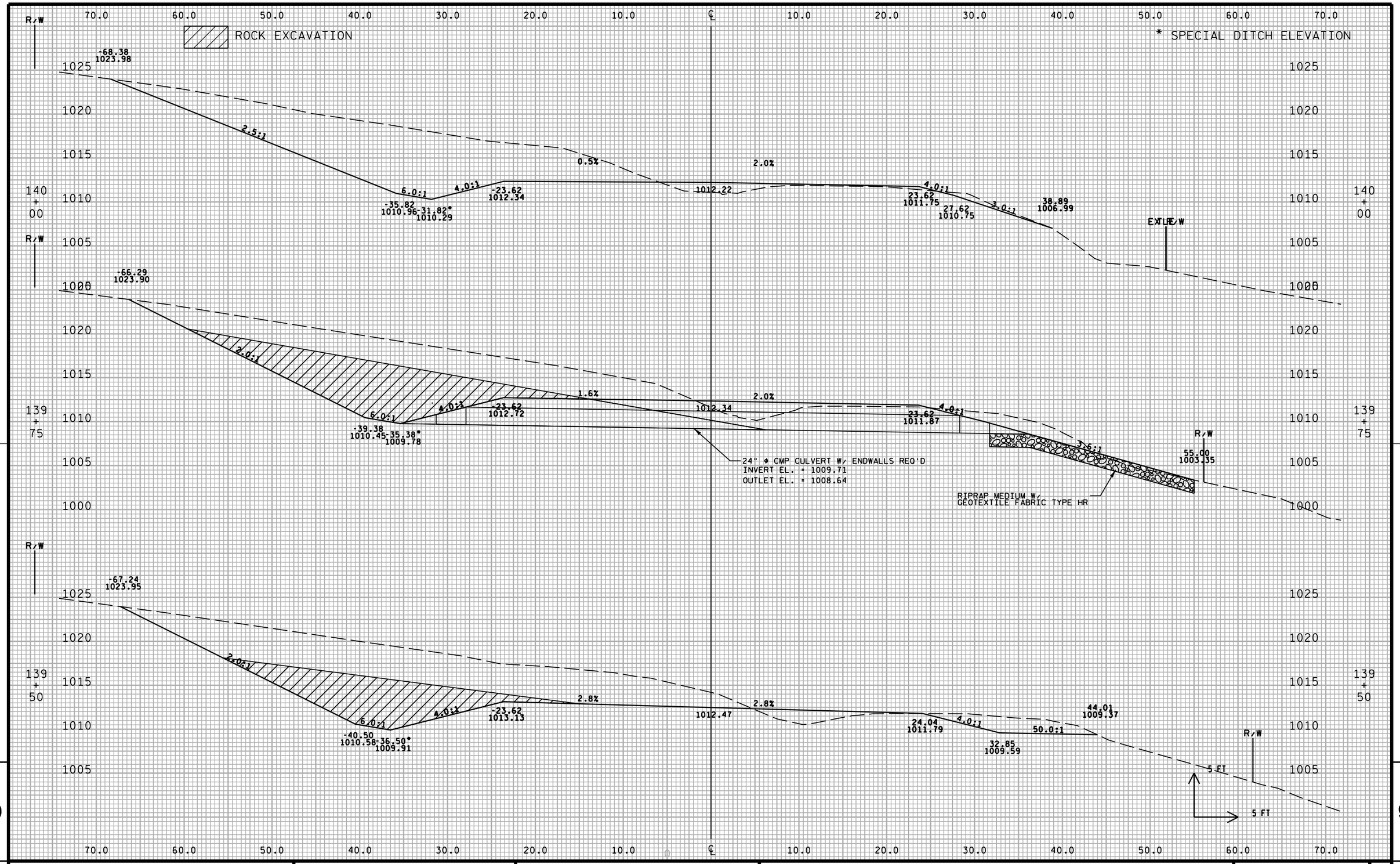

9

PROJECT NO:5648-00-72	HWY:CTH D	COUNTY: LAFAYETTE	CROSS SECTIONS:	SHEET 157	E

FILE NAME : $$....designfile....$$ PLOT DATE : $$...plottingdate...$$ PLOT BY : $$...plotuser...$$ PLOT NAME : PLOT SCALE : $$.....plotscale.....$$ WISDOT/CADDS SHEET 21

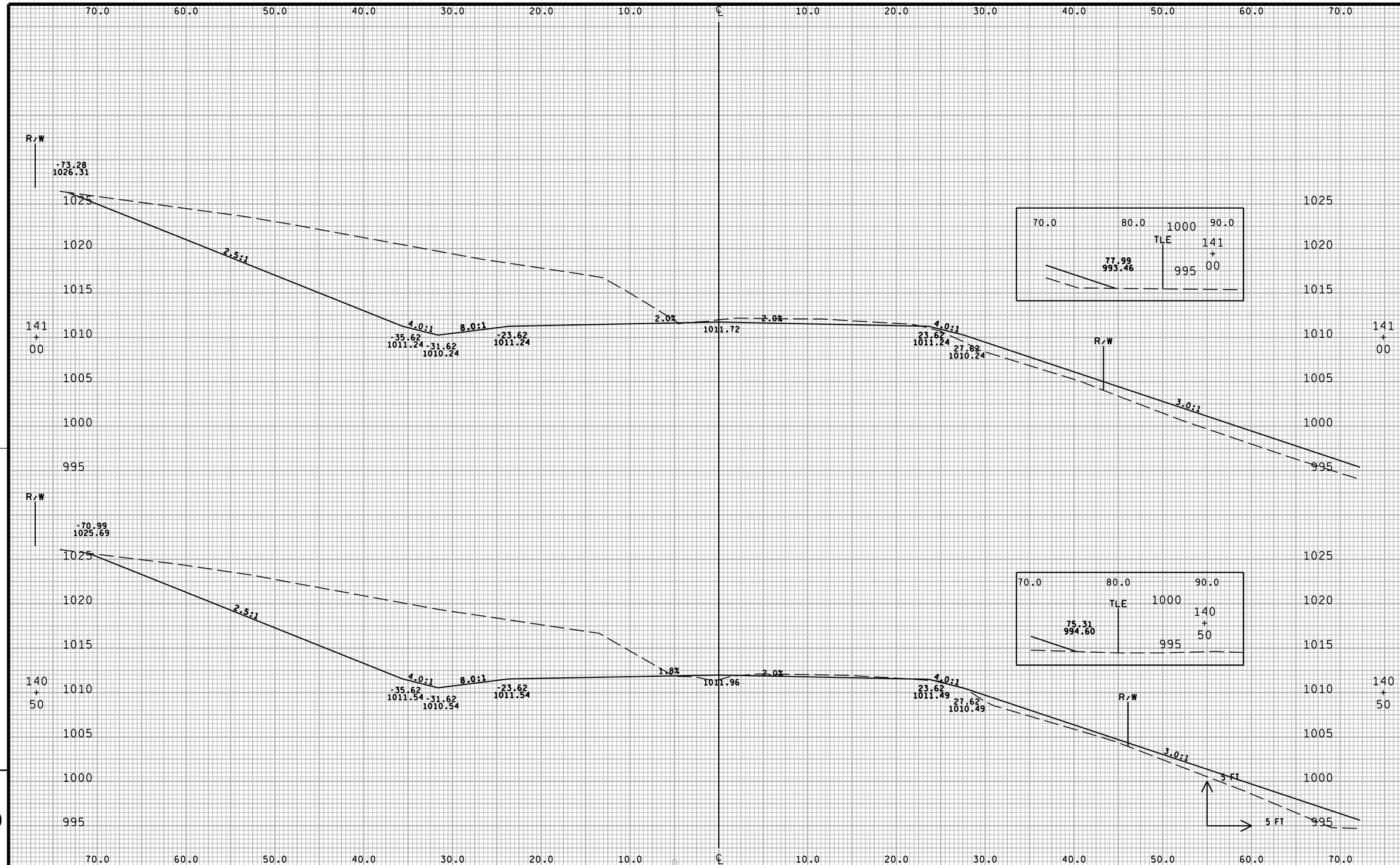

9

9

PROJECT NO:5648-00-72	HWY:CTH D	COUNTY: LAFAYETTE	CROSS SECTIONS:	SHEET E

FILE NAME : $$....designfile....$$ PLOT DATE : $$...plottingdate...$$ PLOT BY : $$...plotuser...$$ PLOT NAME : PLOT SCALE : $$.....plotscale.....$$ WISDOT/CADDS SHEET 21

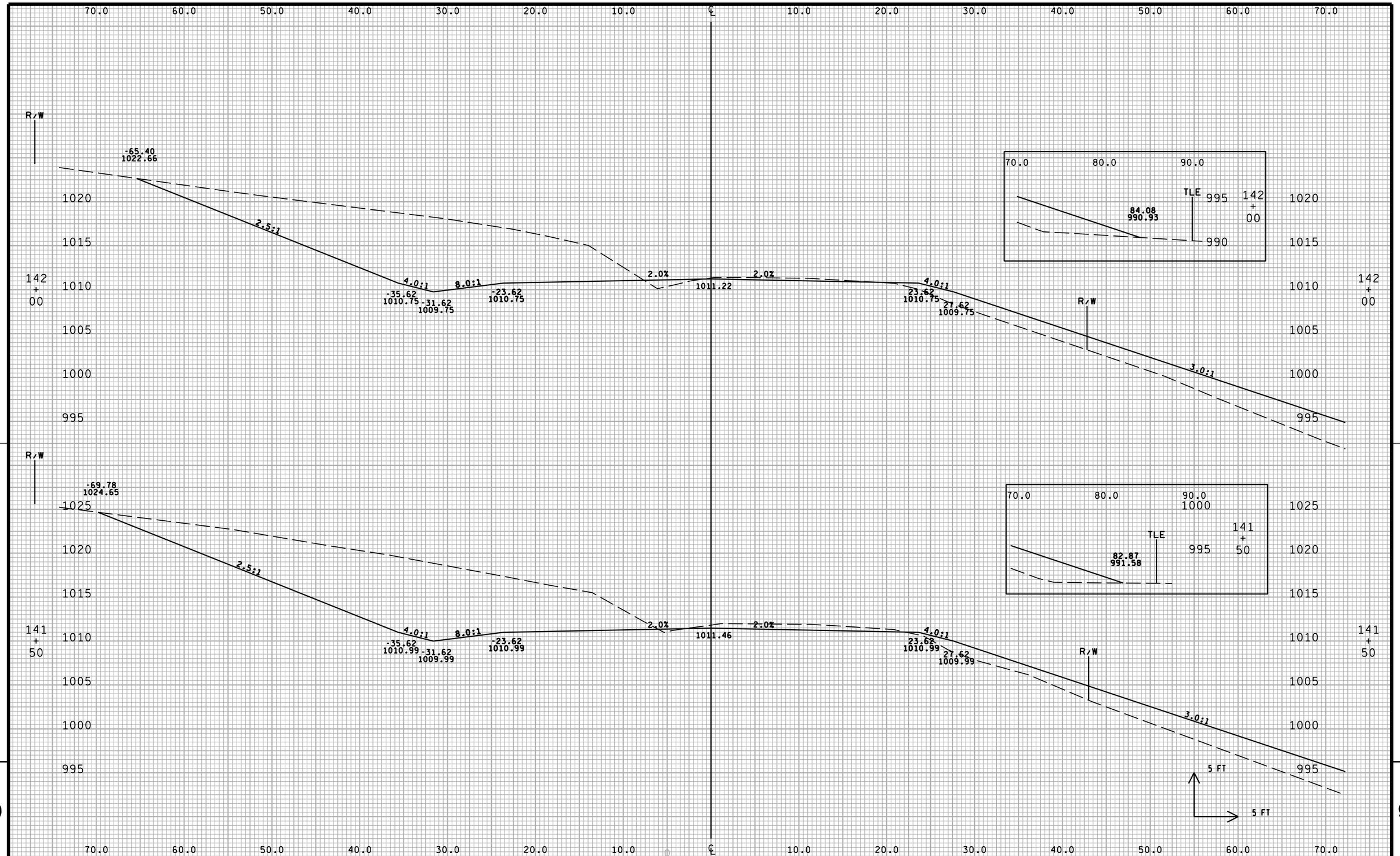

PROJECT NO:5648-00-72	HWY:CTH D	COUNTY: LAFAYETTE	CROSS SECTIONS:	SHEET 159	E

FILE NAME : $$....designfile....$$ PLOT DATE : $$...plottingdate...$$ PLOT BY : $$...plotuser...$$ PLOT NAME : PLOT SCALE : $$.....plotscale.....$$ WISDOT/CADDS SHEET 21

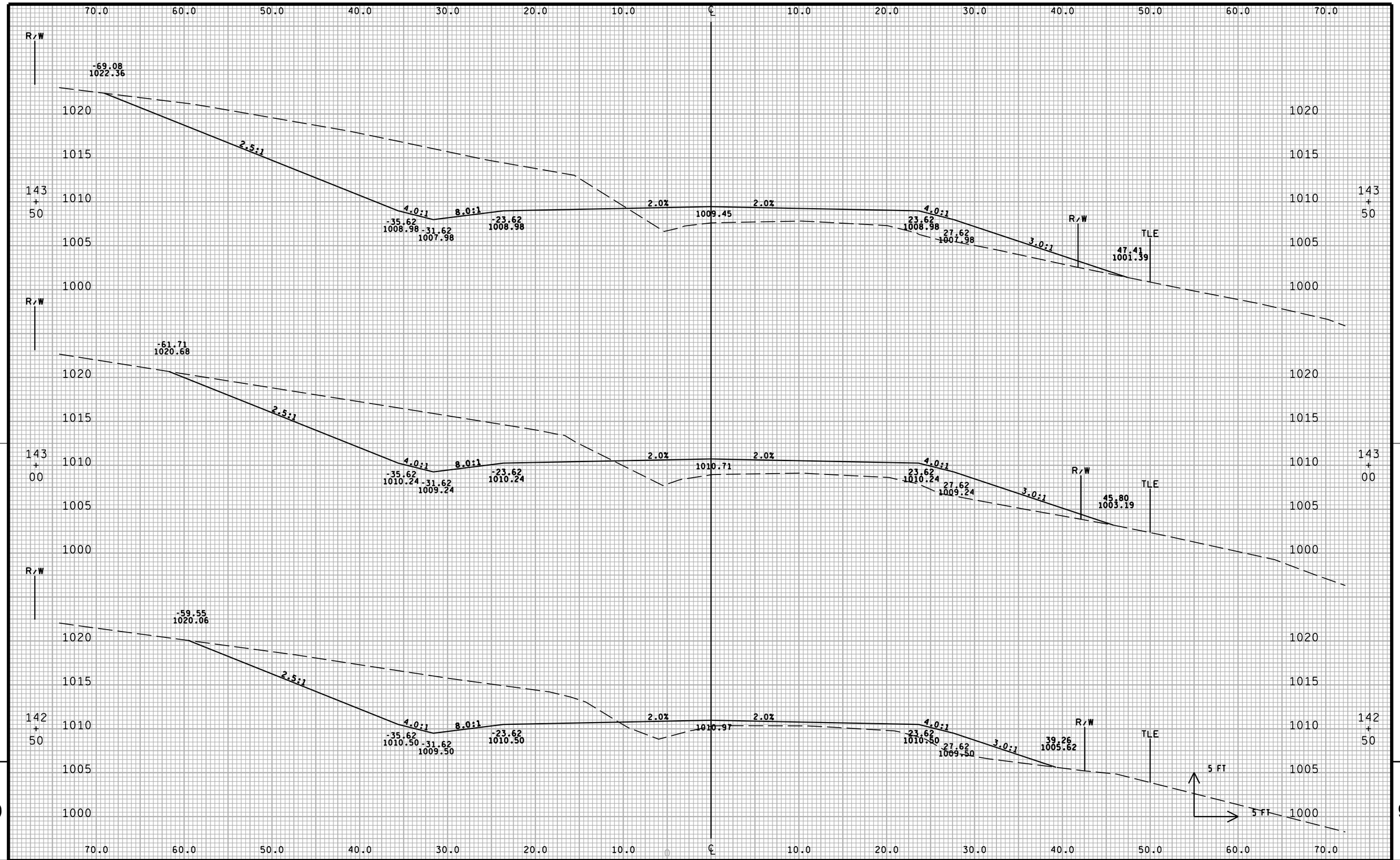

PROJECT NO:5648-00-72	HWY:CTH D	COUNTY: LAFAYETTE	CROSS SECTIONS:	SHEET 160	E

FILE NAME : $$....designfile....$$ PLOT DATE : $$...plottingdate...$$ PLOT BY : $$...plotuser...$$ PLOT NAME : PLOT SCALE : $$.....plotscale.....$$ WISDOT/CADDS SHEET 21

9 9

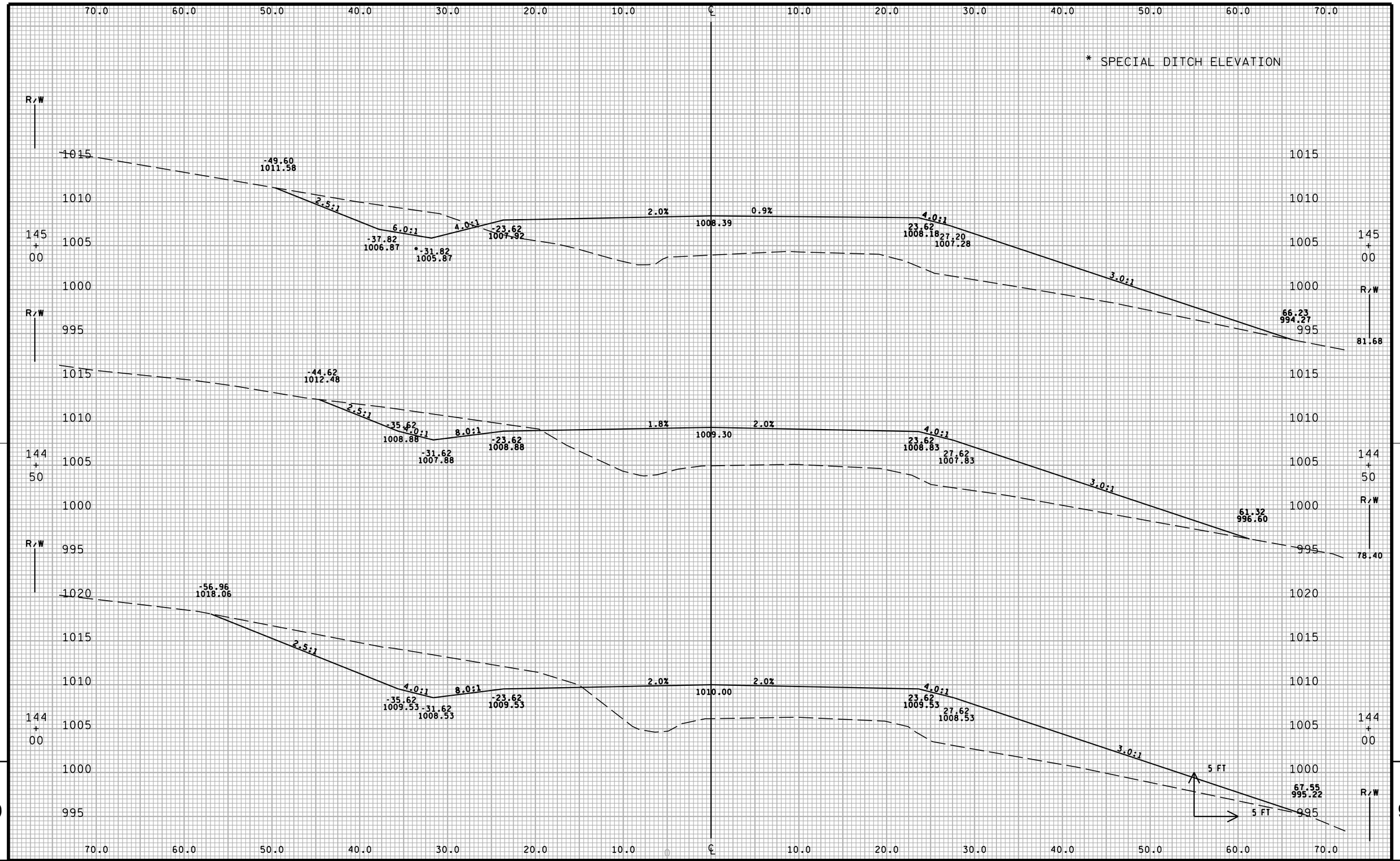

9

PROJECT NO:5648-00-72	HWY:CTH D	COUNTY: LAFAYETTE	CROSS SECTIONS:	SHEET	E

FILE NAME : $$....designfile....$$ PLOT DATE : $$...plottingdate...$$ PLOT BY : $$...plotuser...$$ PLOT NAME : PLOT SCALE : $$.....plotscale.....$$ WISDOT/CADDS SHEET 21

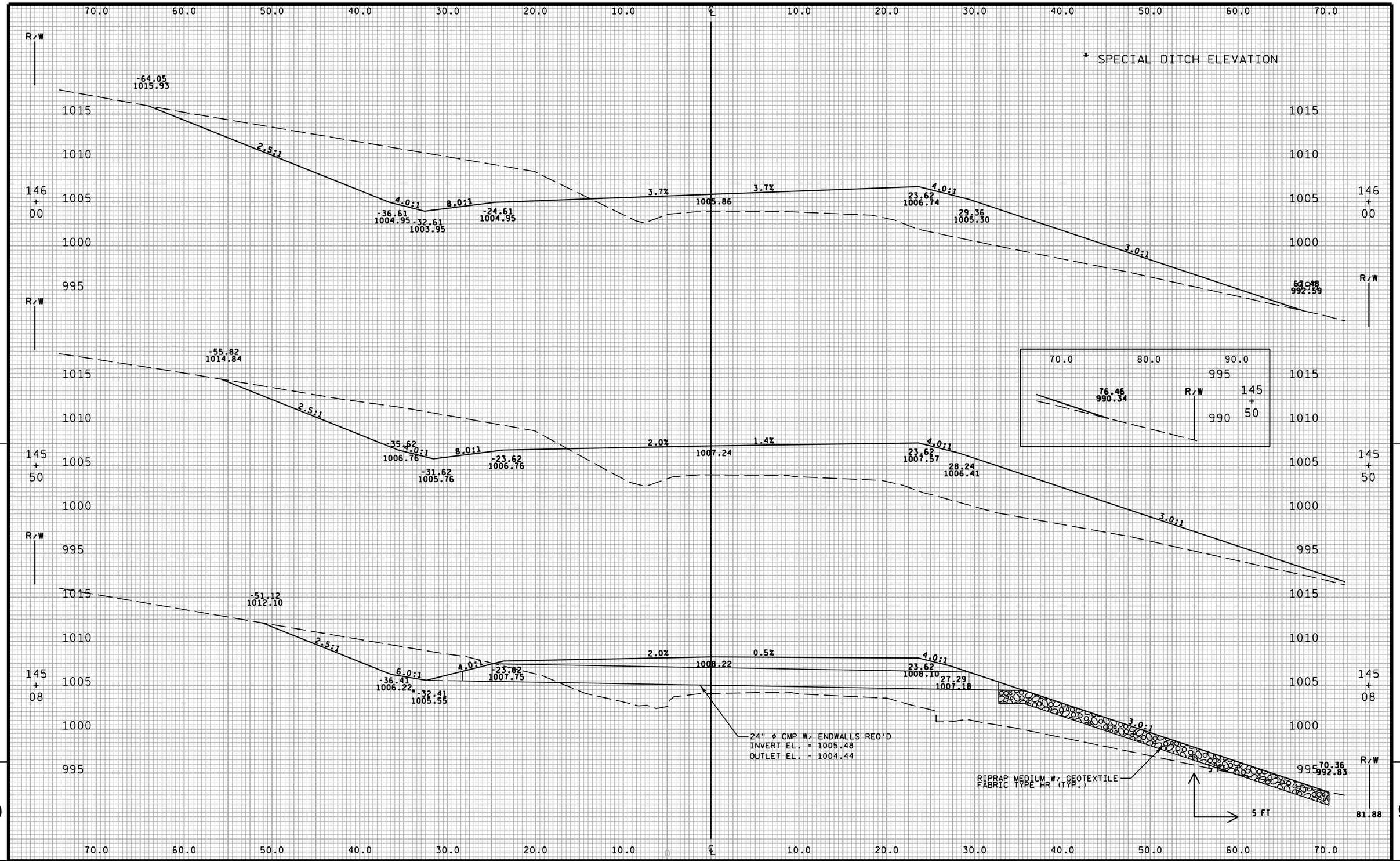

9

PROJECT NO:5648-00-72	HWY:CTH D	COUNTY: LAFAYETTE	CROSS SECTIONS:	SHEET 162	E

FILE NAME : $$....designfile....$$ PLOT DATE : $$...plottingdate...$$ PLOT BY : $$...plotuser...$$ PLOT NAME : PLOT SCALE : $$.....plotscale.....$$ WISDOT/CADDS SHEET 21

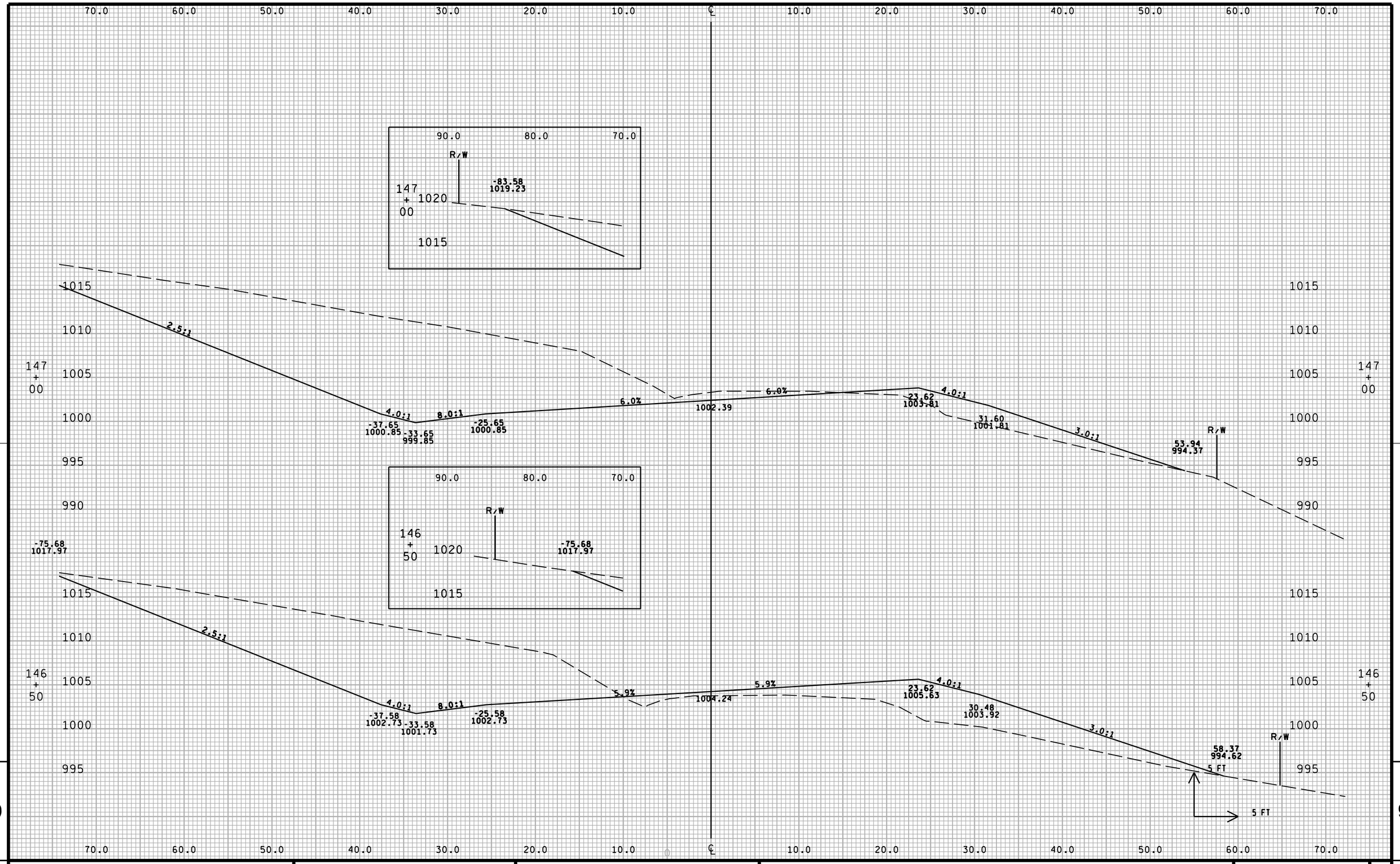

9

9

PROJECT NO:5648-00-72	HWY:CTH D	COUNTY: LAFAYETTE	CROSS SECTIONS:	SHEET 163	E

FILE NAME : $$....designfile....$$ PLOT DATE : $$...plottingdate...$$ PLOT BY : $$...plotuser...$$ PLOT NAME : PLOT SCALE : $$.....plotscale.....$$ WISDOT/CADDS SHEET 21

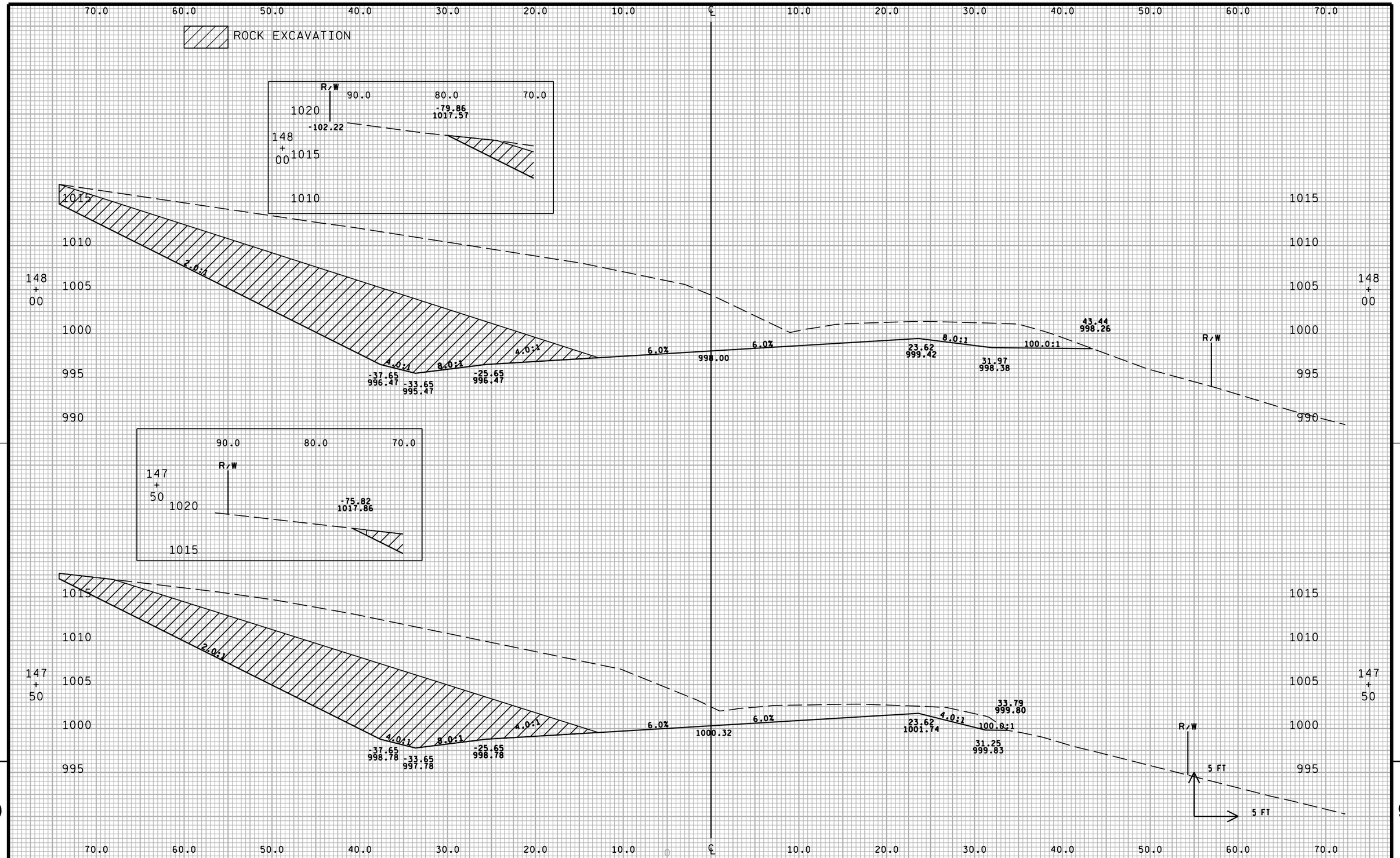

9

PROJECT NO:5648-00-72	HWY:CTH D	COUNTY: LAFAYETTE	CROSS SECTIONS:	SHEET 164	E

FILE NAME : $$....designfile....$$ PLOT DATE : $$...plottingdate...$$ PLOT BY : $$...plotuser...$$ PLOT NAME : PLOT SCALE : $$.....plotscale.....$$ WISDOT/CADDS SHEET 21

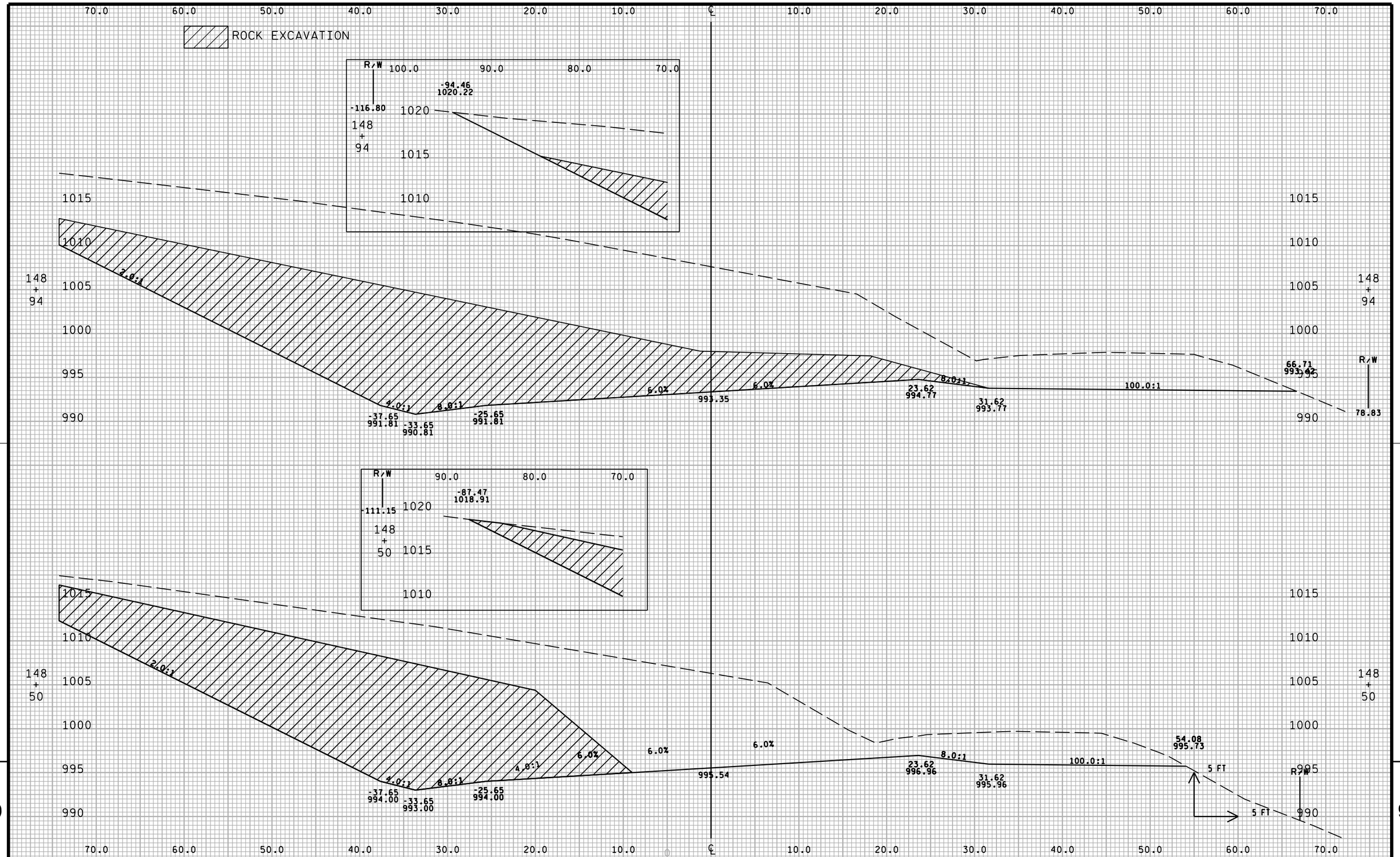

PROJECT NO:5648-00-72	HWY:CTH D	COUNTY: LAFAYETTE	CROSS SECTIONS:	SHEET 165	E

FILE NAME : $$....designfile....$$ PLOT DATE : $$...plottingdate...$$ PLOT BY : $$...plotuser...$$ PLOT NAME : PLOT SCALE : $$.....plotscale.....$$ WISDOT/CADDS SHEET 21

9 9

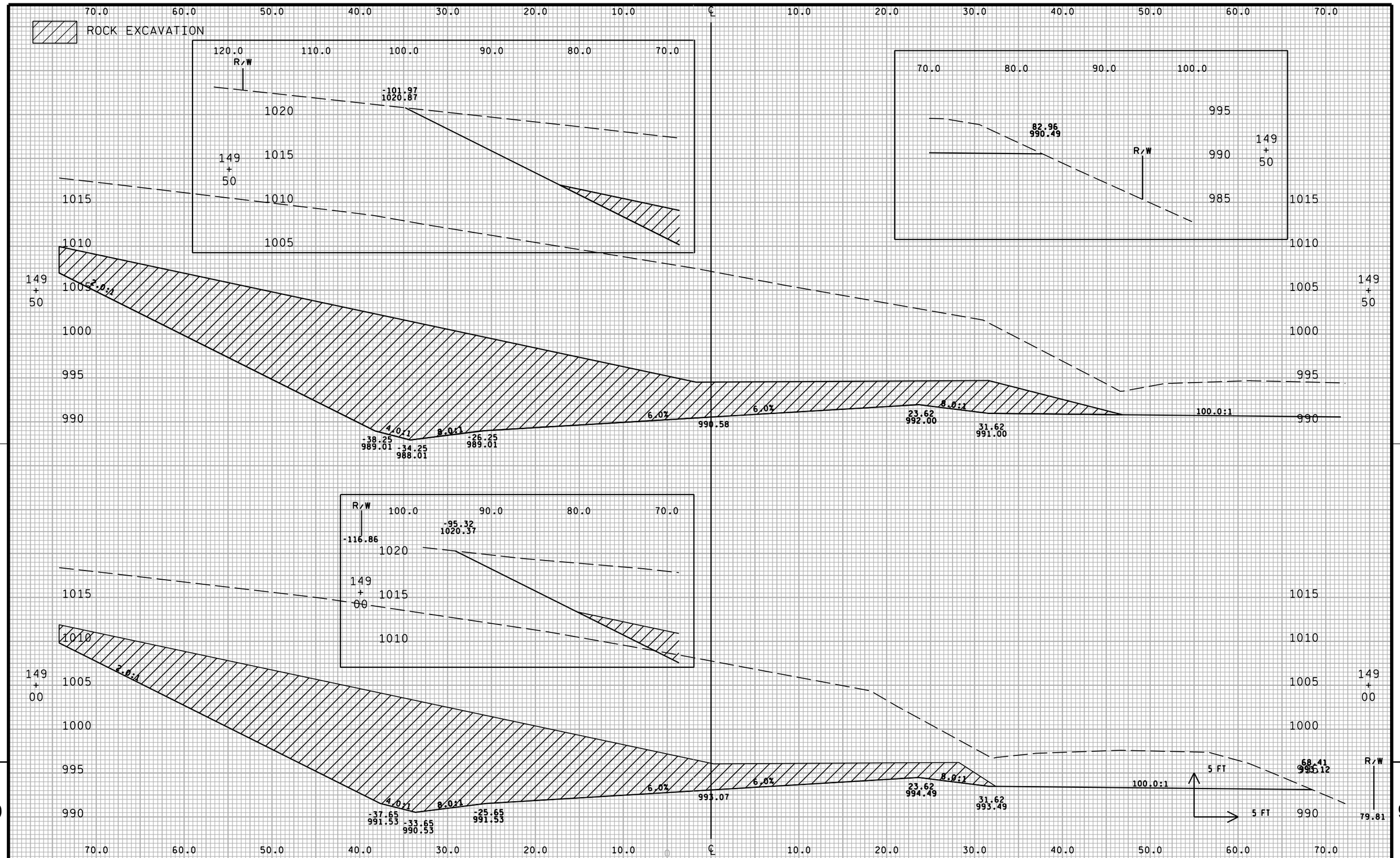

PROJECT NO:5648-00-72	HWY:CTH D	COUNTY: LAFAYETTE	CROSS SECTIONS:	SHEET 166	E

FILE NAME : $$....designfile....$$ PLOT DATE : $$...plottingdate...$$ PLOT BY : $$...plotuser...$$ PLOT NAME : PLOT SCALE : $$.....plotscale.....$$ WISDOT/CADDS SHEET 21

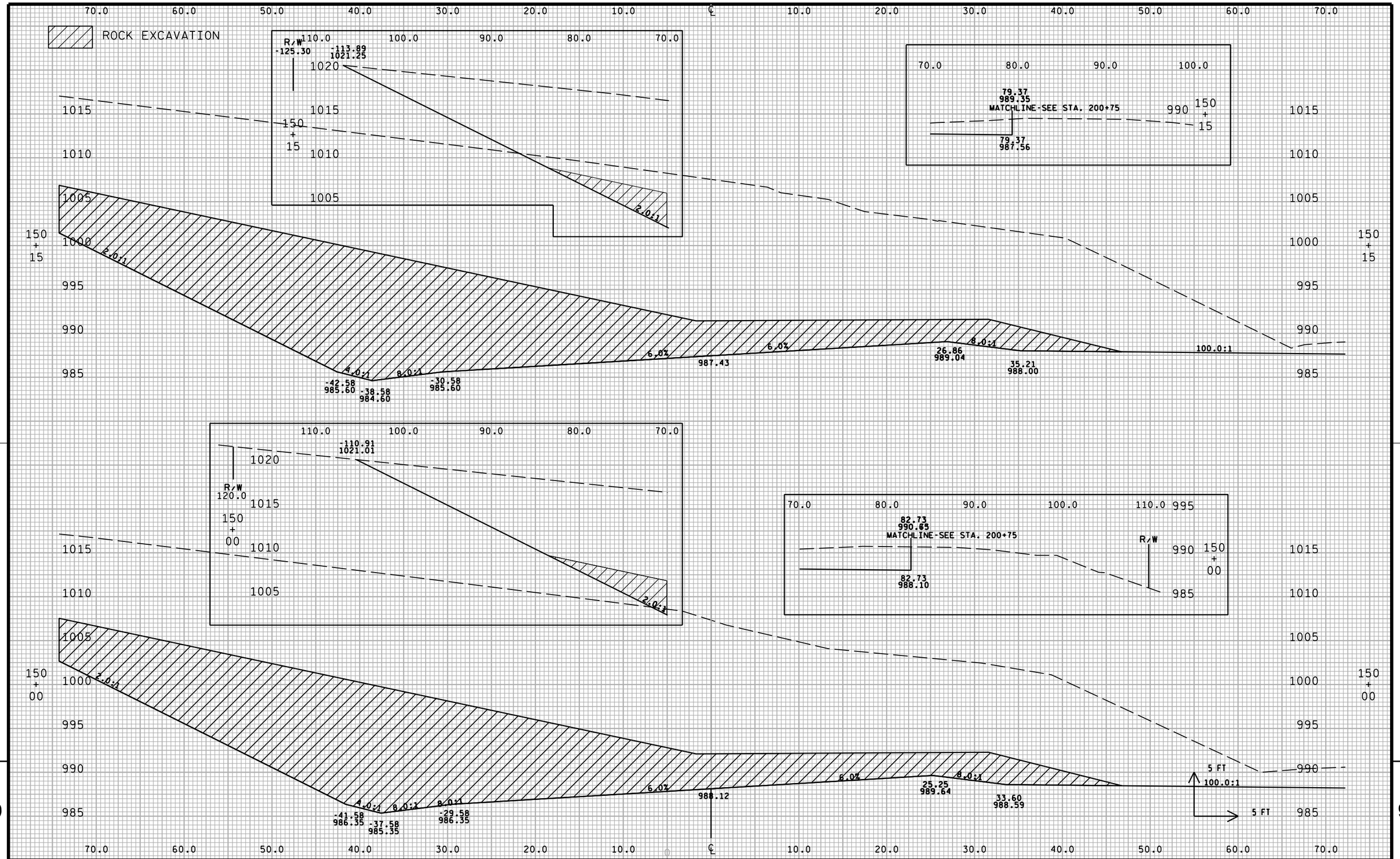

PROJECT NO:5648-00-72	HWY:CTH D	COUNTY: LAFAYETTE	CROSS SECTIONS:	SHEET E

FILE NAME : $$....designfile....$$ PLOT DATE : $$...plottingdate...$$ PLOT BY : $$...plotuser...$$ PLOT NAME : PLOT SCALE : $$.....plotscale.....$$ WISDOT/CADDS SHEET 21

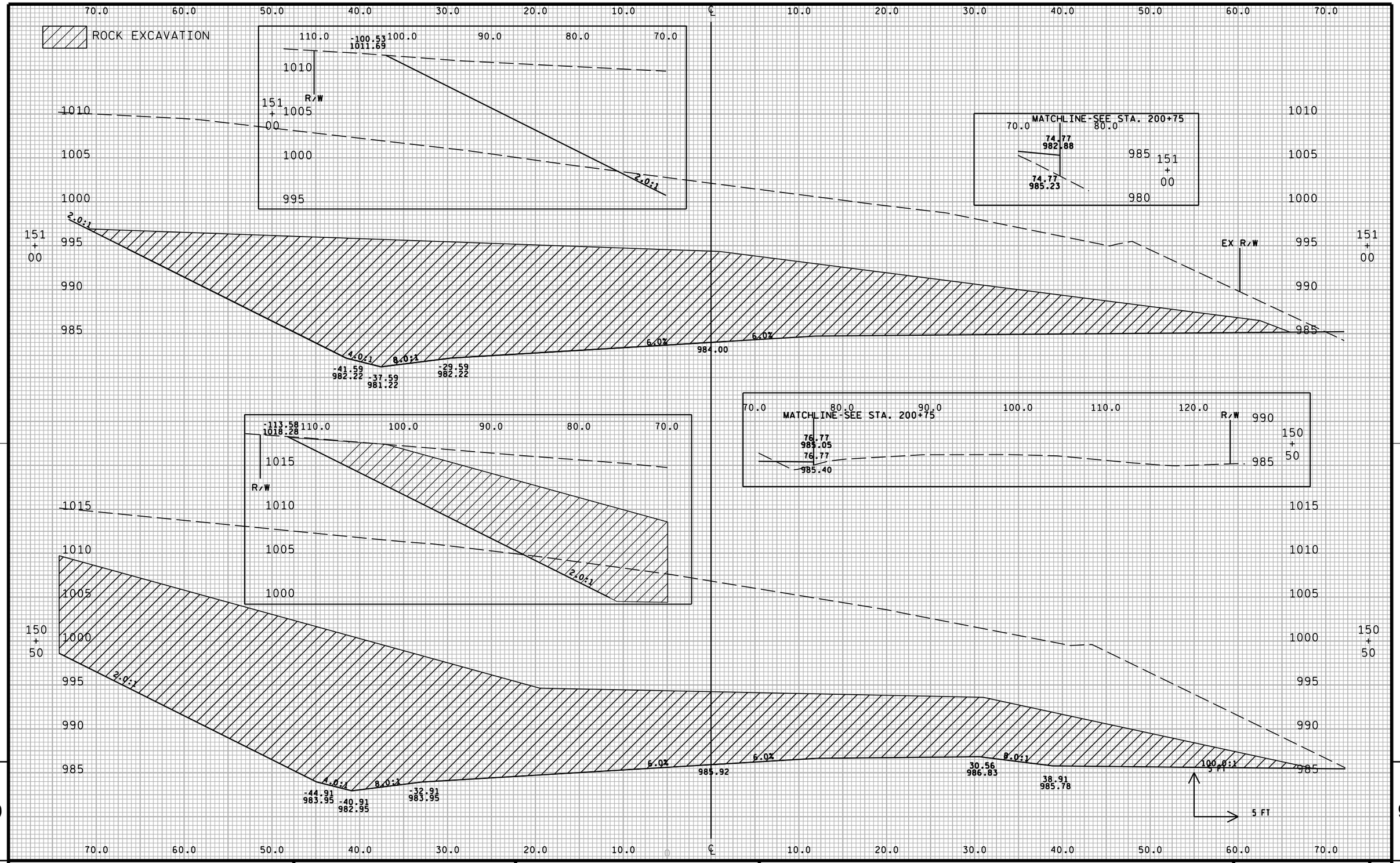

PROJECT NO:5648-00-72	HWY:CTH D	COUNTY: LAFAYETTE	CROSS SECTIONS:	SHEET 168	E

FILE NAME : $$....designfile....$$ PLOT DATE : $$...plottingdate...$$ PLOT BY : $$...plotuser...$$ PLOT NAME : PLOT SCALE : $$.....plotscale.....$$ WISDOT/CADDS SHEET 21

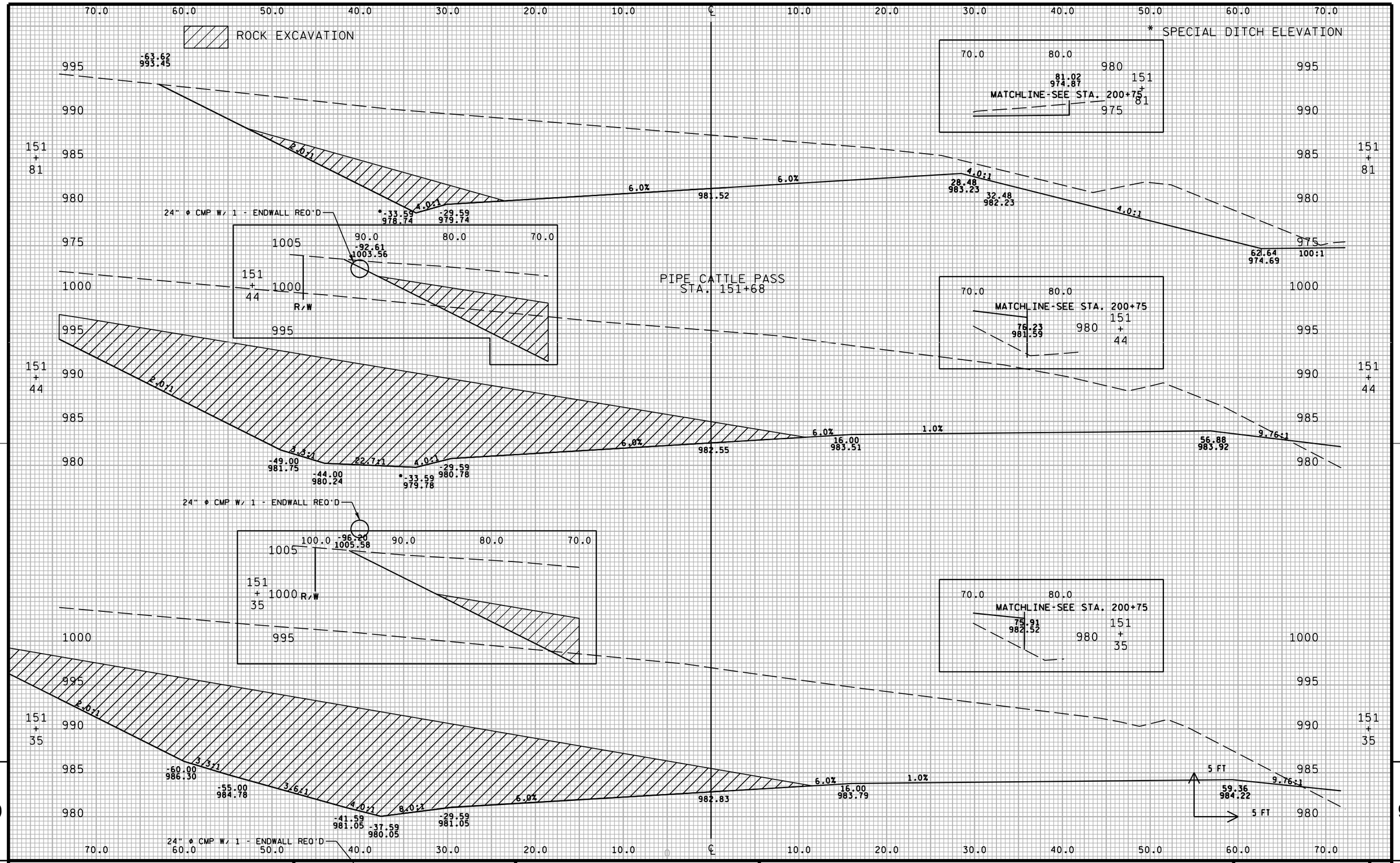

PROJECT NO:5648-00-72	HWY:CTH D	COUNTY: LAFAYETTE	CROSS SECTIONS:	SHEET	E

FILE NAME : $$....designfile....$$ PLOT DATE : $$...plottingdate...$$ PLOT BY : $$...plotuser...$$ PLOT NAME : PLOT SCALE : $$.....plotscale.....$$ WISDOT/CADDS SHEET 21

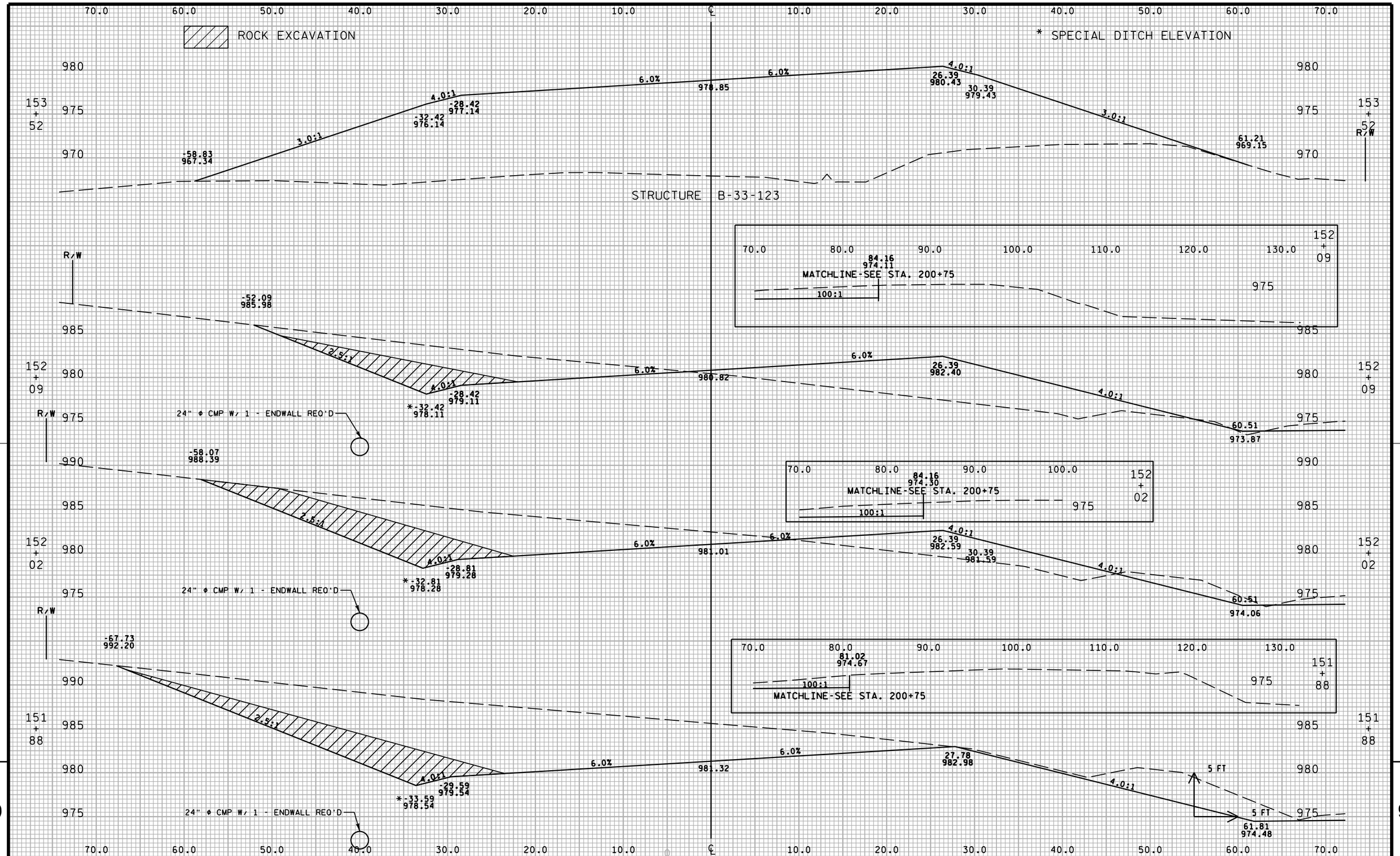

PROJECT NO:5648-00-72	HWY:CTH D	COUNTY: LAFAYETTE	CROSS SECTIONS:	SHEET 170	E

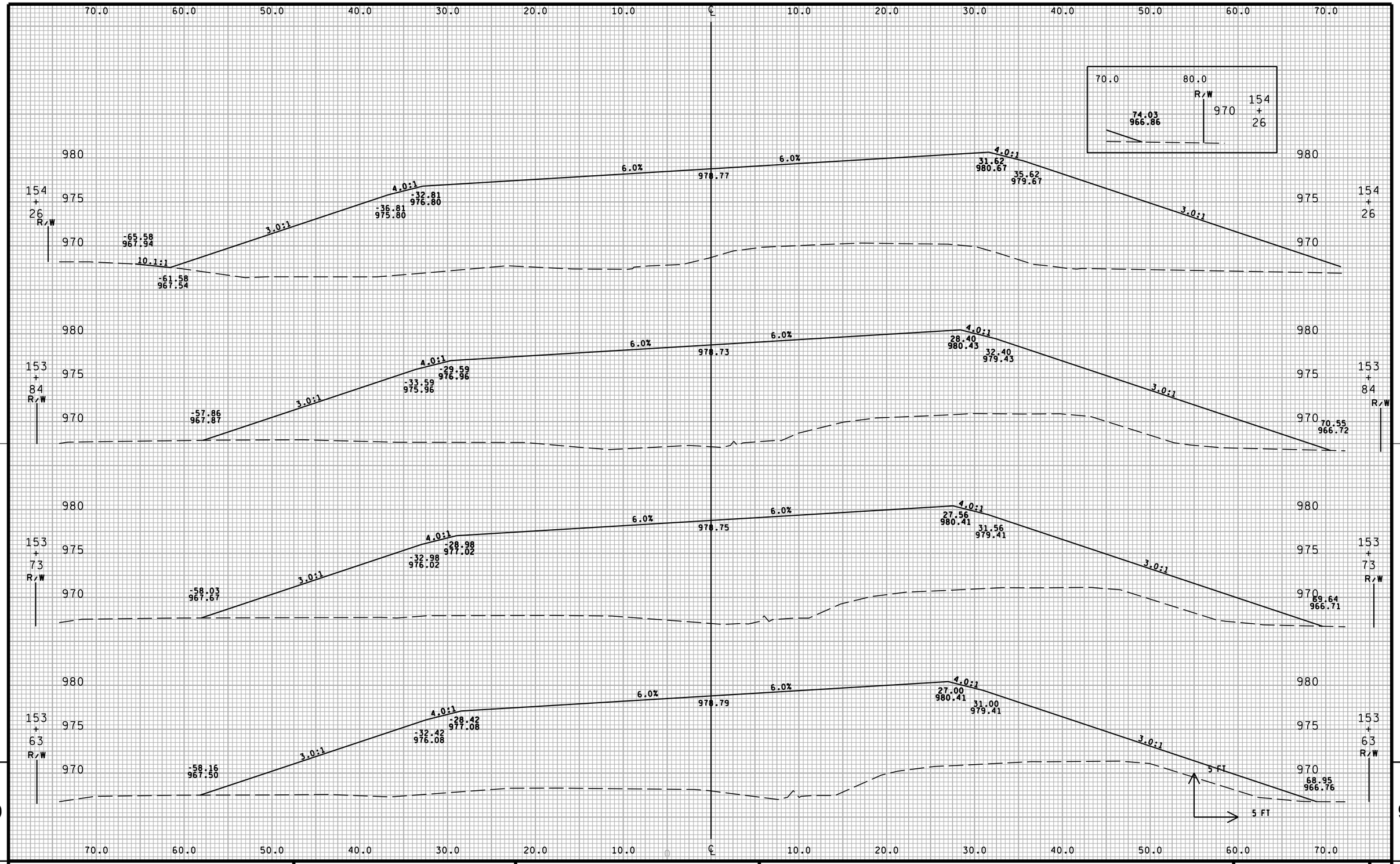

PROJECT NO:5648-00-72	HWY:CTH D	COUNTY: LAFAYETTE	CROSS SECTIONS:	SHEET	E

FILE NAME : $$....designfile....$$ PLOT DATE : $$...plottingdate...$$ PLOT BY : $$...plotuser...$$ PLOT NAME : PLOT SCALE : $$.....plotscale.....$$ WISDOT/CADDS SHEET 21

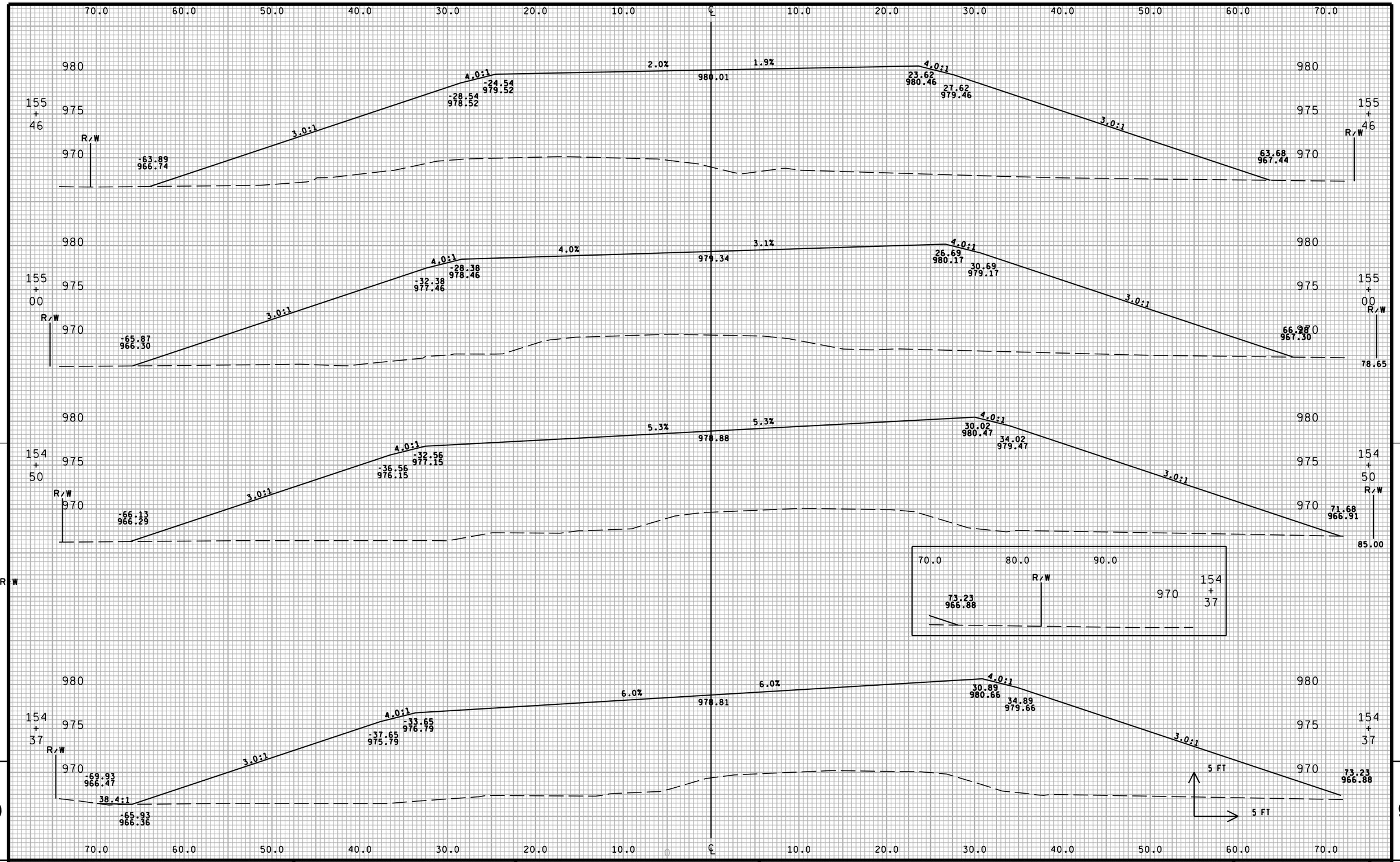

PROJECT NO:5648-00-72	HWY:CTH D	COUNTY: LAFAYETTE	CROSS SECTIONS:	SHEET 172	E

FILE NAME : $$....designfile....$$ PLOT DATE : $$...plottingdate...$$ PLOT BY : $$...plotuser...$$ PLOT NAME : PLOT SCALE : $$.....plotscale.....$$ WISDOT/CADDS SHEET 21

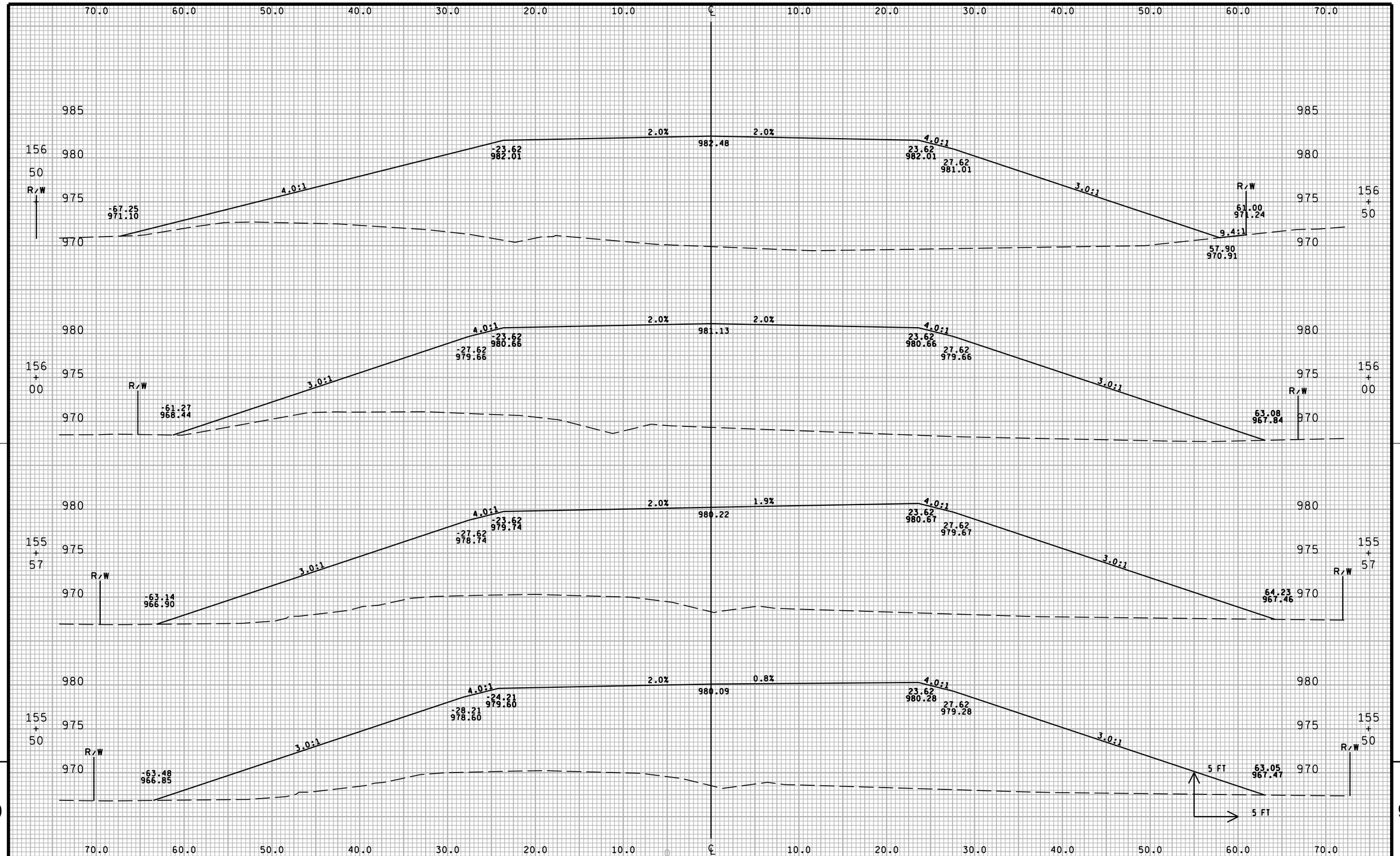

PROJECT NO:5648-00-72	HWY:CTH D	COUNTY: LAFAYETTE	CROSS SECTIONS:	SHEET	E

FILE NAME : $$....designfile....$$ PLOT DATE : $$...plottingdate...$$ PLOT BY : $$...plotuser...$$ PLOT NAME : PLOT SCALE : $$.....plotscale.....$$ WISDOT/CADDS SHEET 21

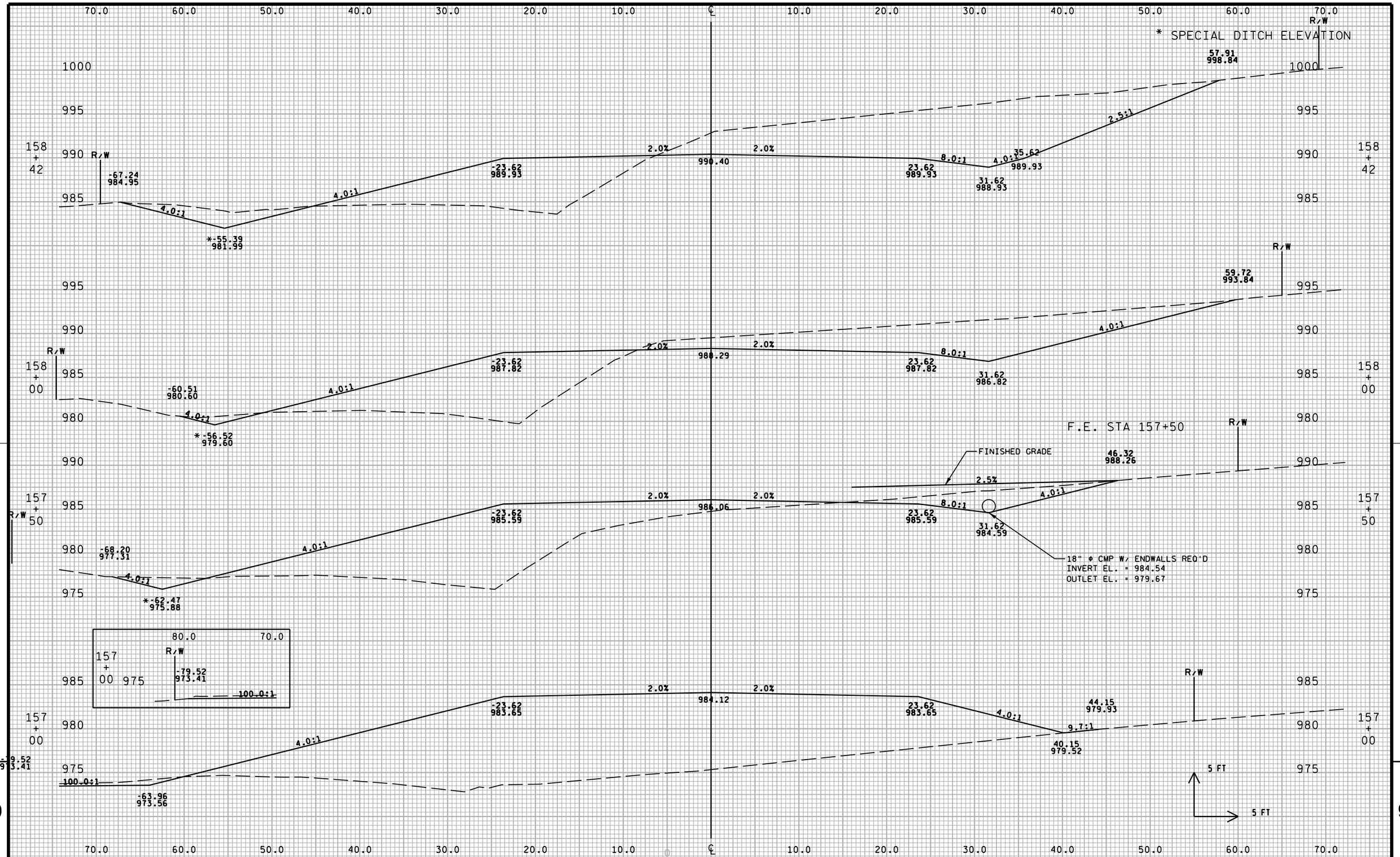

PROJECT NO:5648-00-72	HWY:CTH D	COUNTY: LAFAYETTE	CROSS SECTIONS:	SHEET 174	E

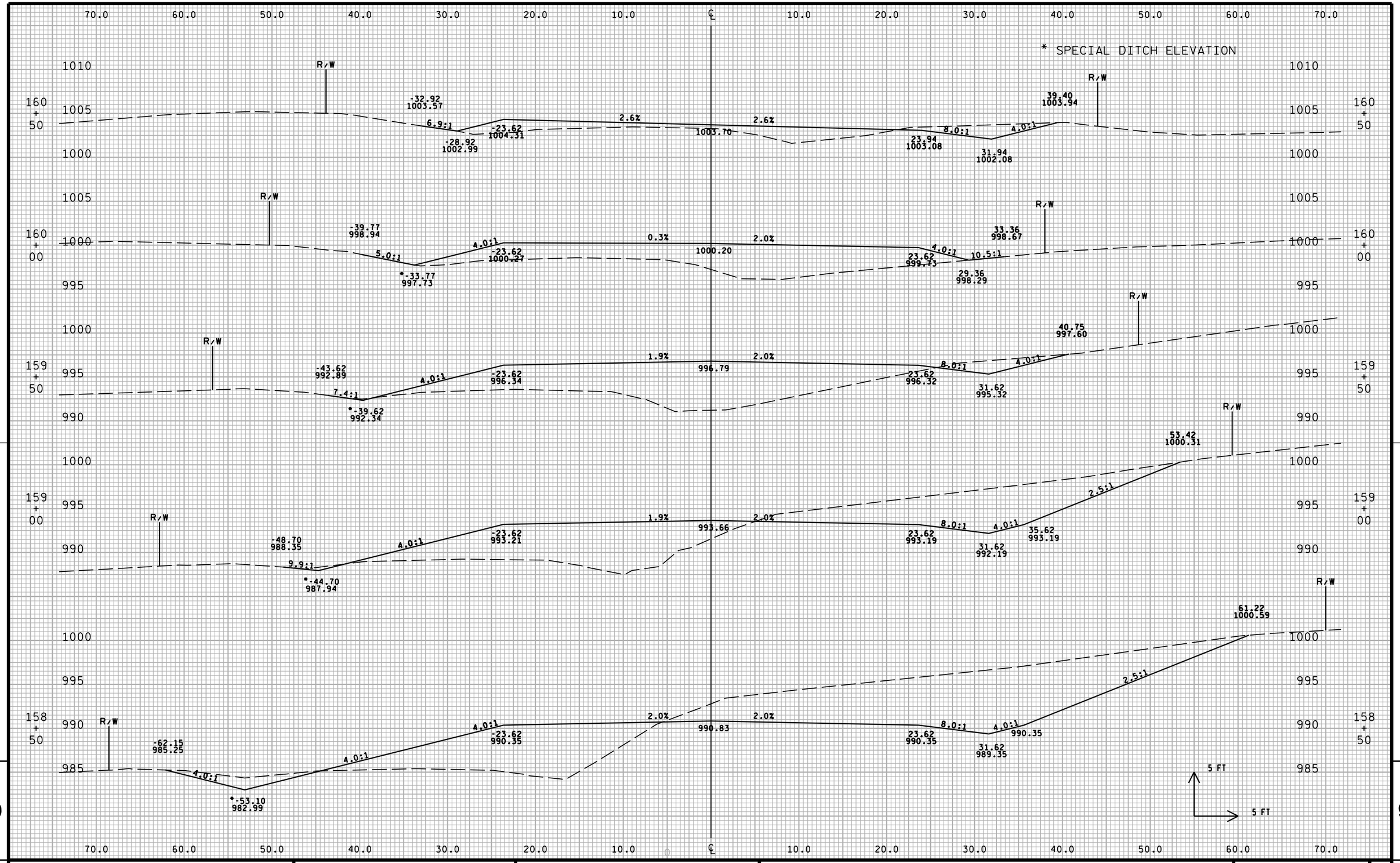

PROJECT NO:5648-00-72	HWY:CTH D	COUNTY: LAFAYETTE	CROSS SECTIONS:	SHEET 175	E

FILE NAME : $$....designfile....$$ PLOT DATE : $$...plottingdate...$$ PLOT BY : $$...plotuser...$$ PLOT NAME : PLOT SCALE : $$.....plotscale.....$$ WISDOT/CADDS SHEET 21

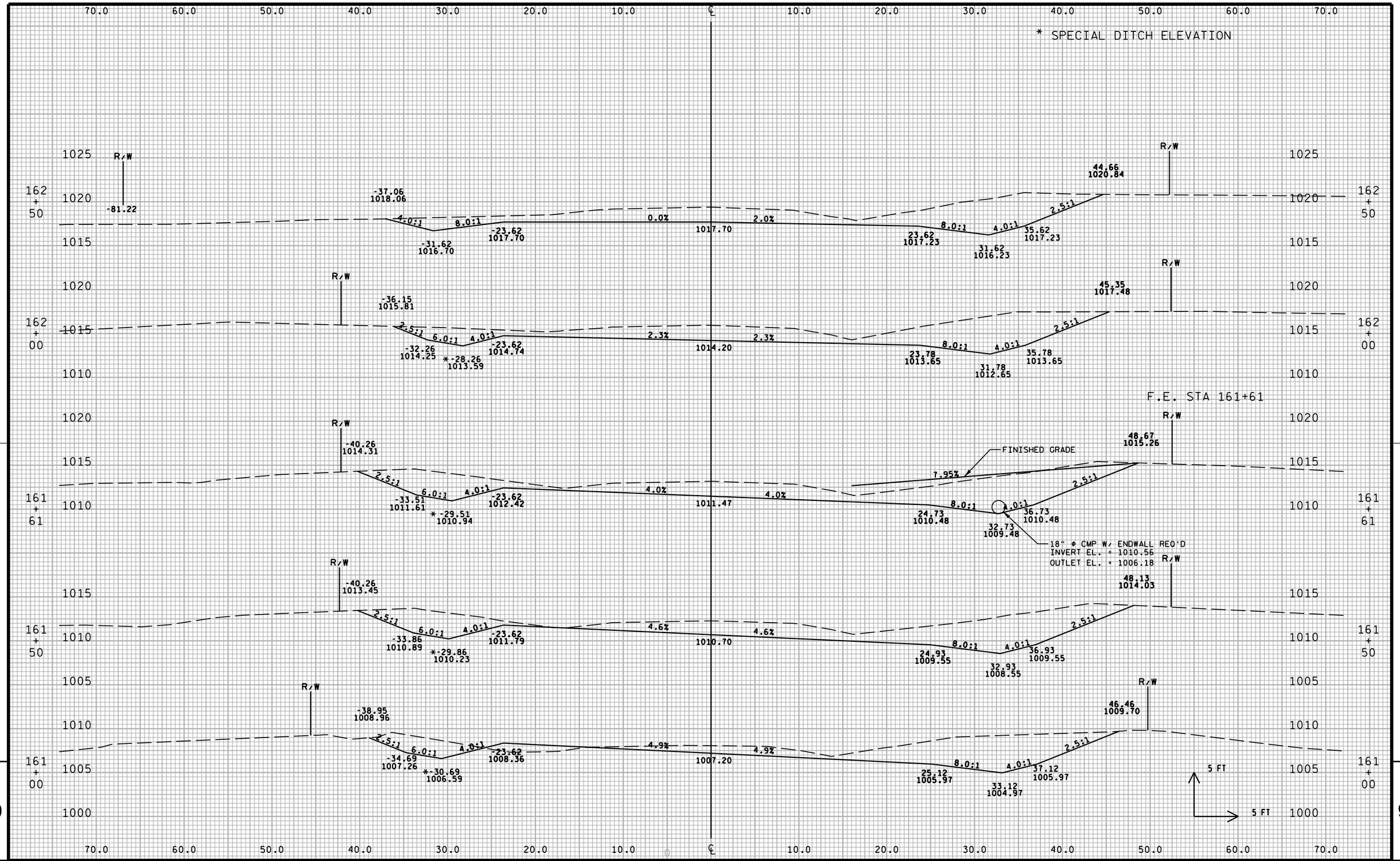

PROJECT NO:5648-00-72	HWY:CTH D	COUNTY: LAFAYETTE	CROSS SECTIONS:	SHEET 176	E

FILE NAME : $$....designfile....$$ PLOT DATE : $$...plottingdate...$$ PLOT BY : $$...plotuser...$$ PLOT NAME : PLOT SCALE : $$.....plotscale.....$$ WISDOT/CADDS SHEET 21

9 9

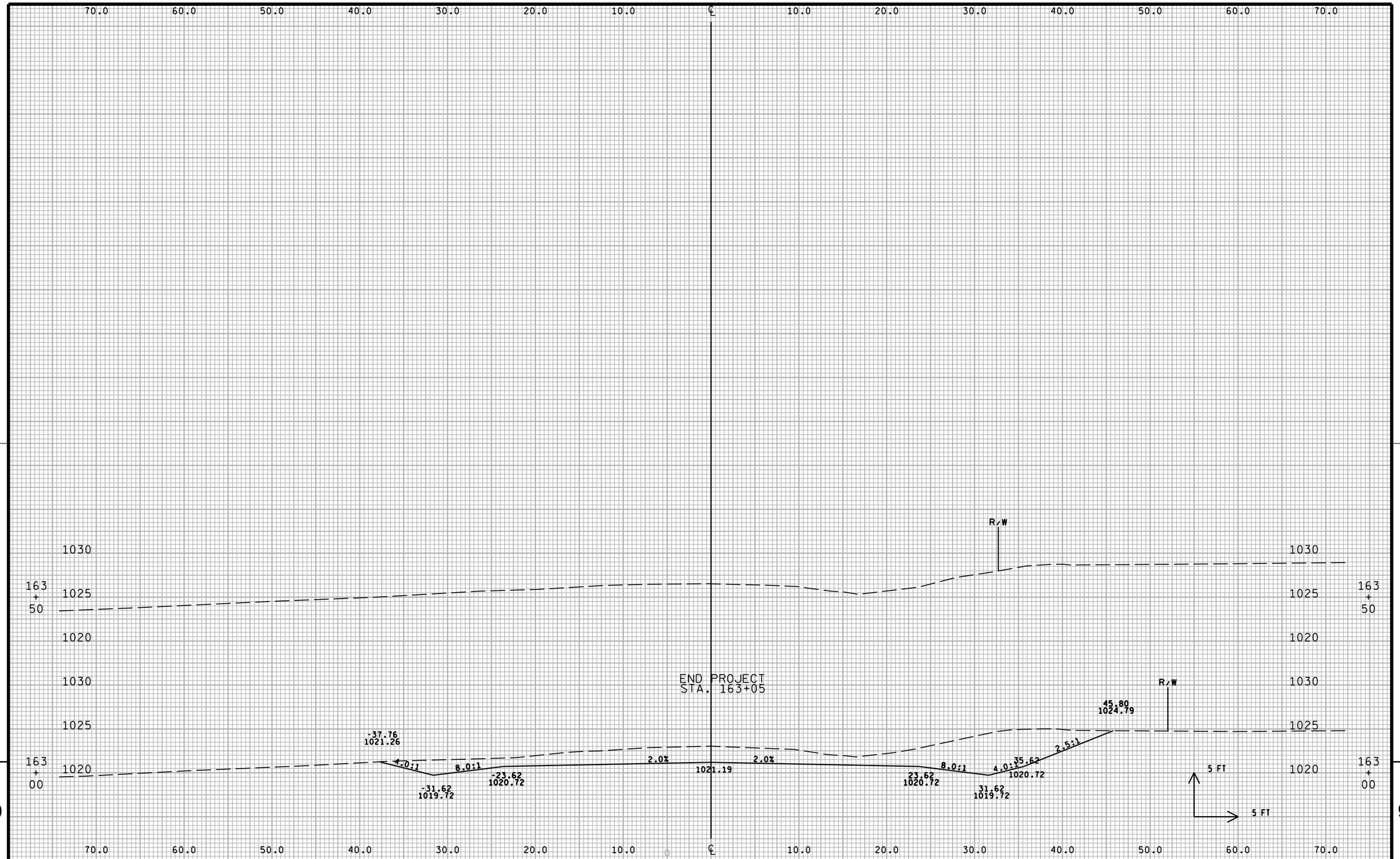

PROJECT NO:5648-00-72	HWY:CTH D	COUNTY: LAFAYETTE	CROSS SECTIONS:	SHEET	E

FILE NAME : $$....designfile....$$ PLOT DATE : $$...plottingdate...$$ PLOT BY : $$...plotuser...$$ PLOT NAME : PLOT SCALE : $$.....plotscale.....$$ WISDOT/CADDS SHEET 21

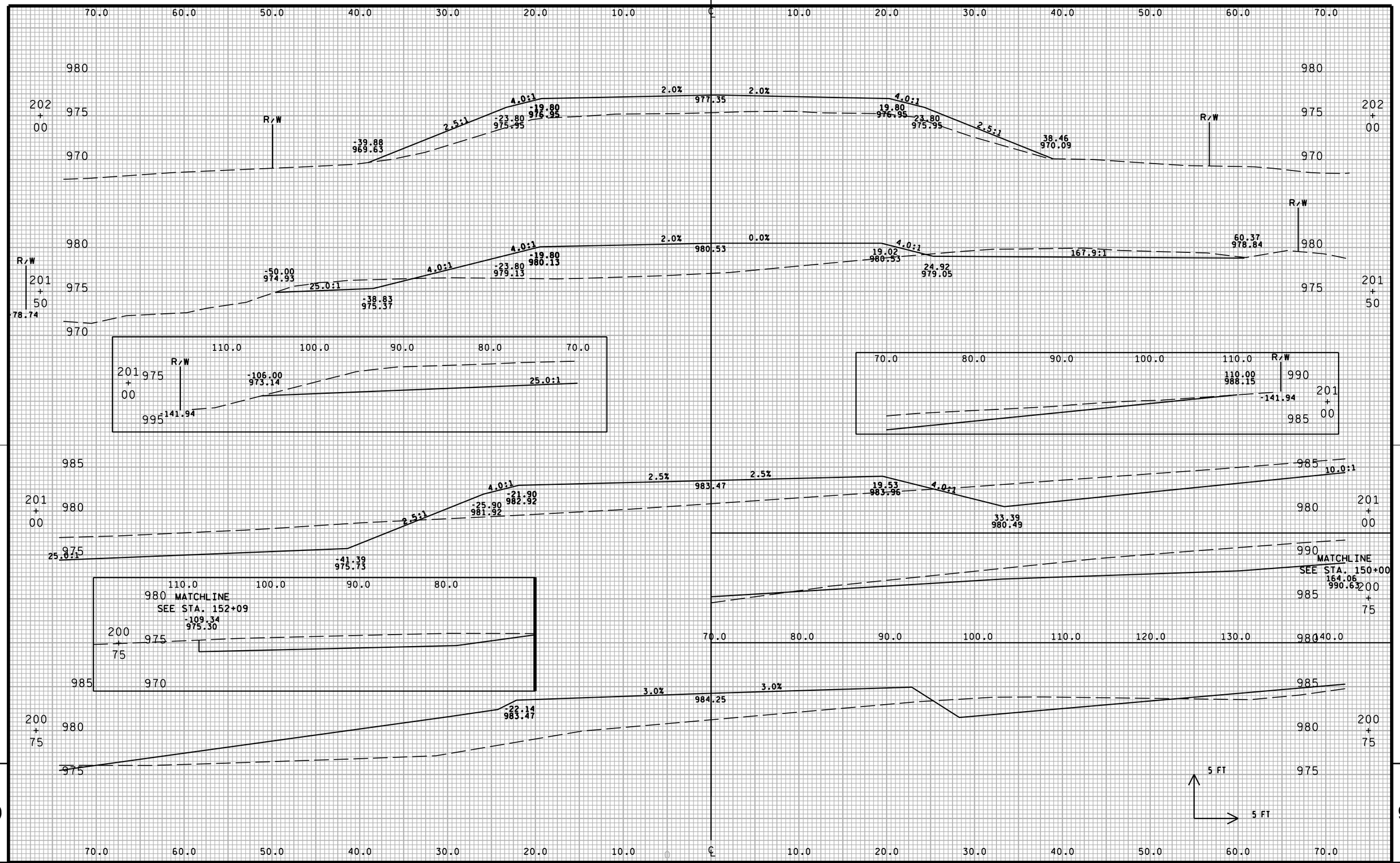

PROJECT NO:5648-00-72	HWY:CTH D	COUNTY: LAFAYETTE	CROSS SECTIONS: ENGLISH HOLLOW	SHEET 178	E

FILE NAME : $$....designfile....$$ PLOT DATE : $$...plottingdate...$$ PLOT BY : $$...plotuser...$$ PLOT NAME : PLOT SCALE : $$.....plotscale.....$$ WISDOT/CADDS SHEET 21

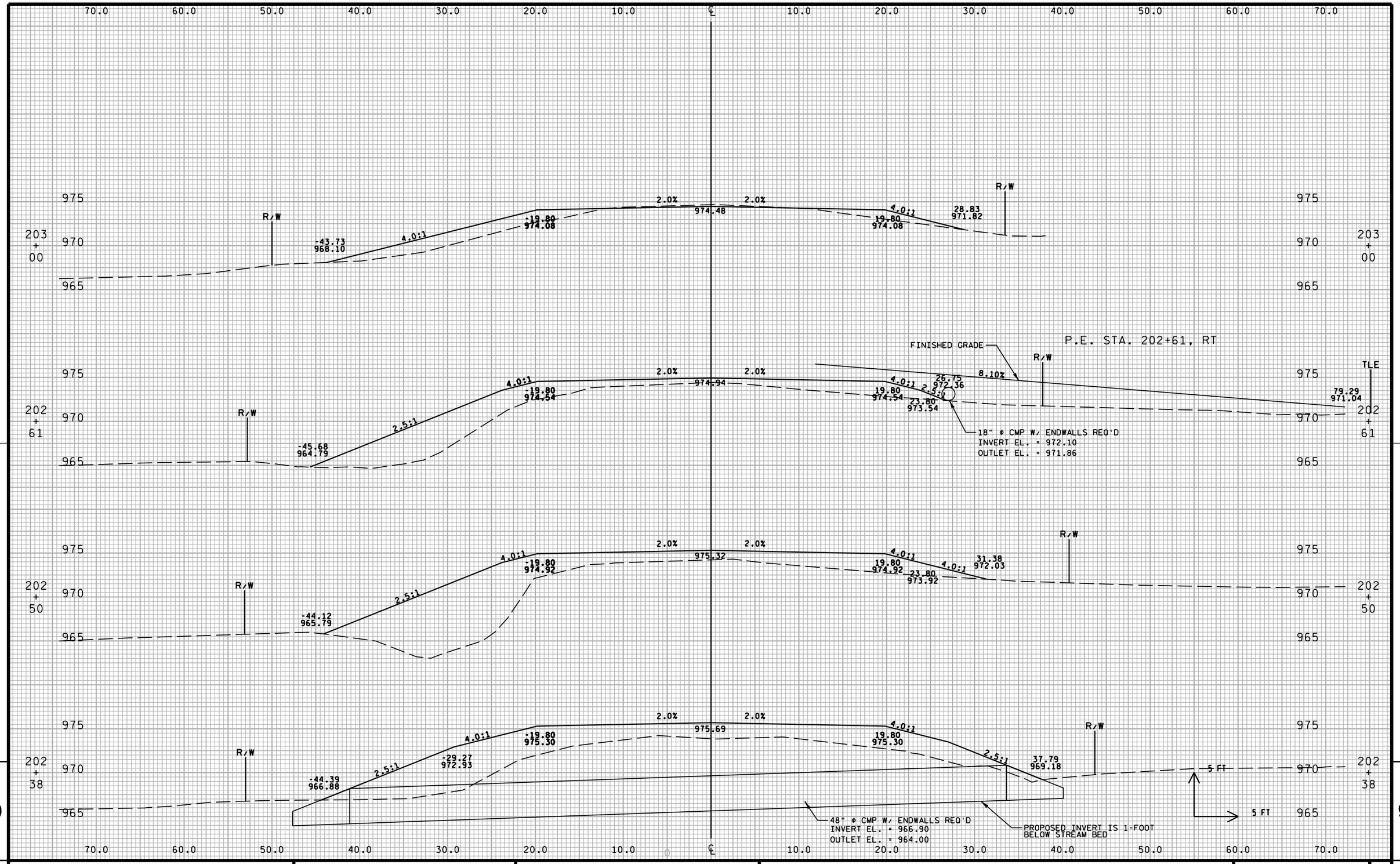

9

PROJECT NO:5648-00-72	HWY:CTH D	COUNTY: LAFAYETTE	CROSS SECTIONS: ENGLISH HOLLOW	SHEET 179	E

FILE NAME : $$....designfile....$$ PLOT DATE : $$...plottingdate...$$ PLOT BY : $$...plotuser...$$ PLOT NAME : PLOT SCALE : $$.....plotscale.....$$ WISDOT/CADDS SHEET 21

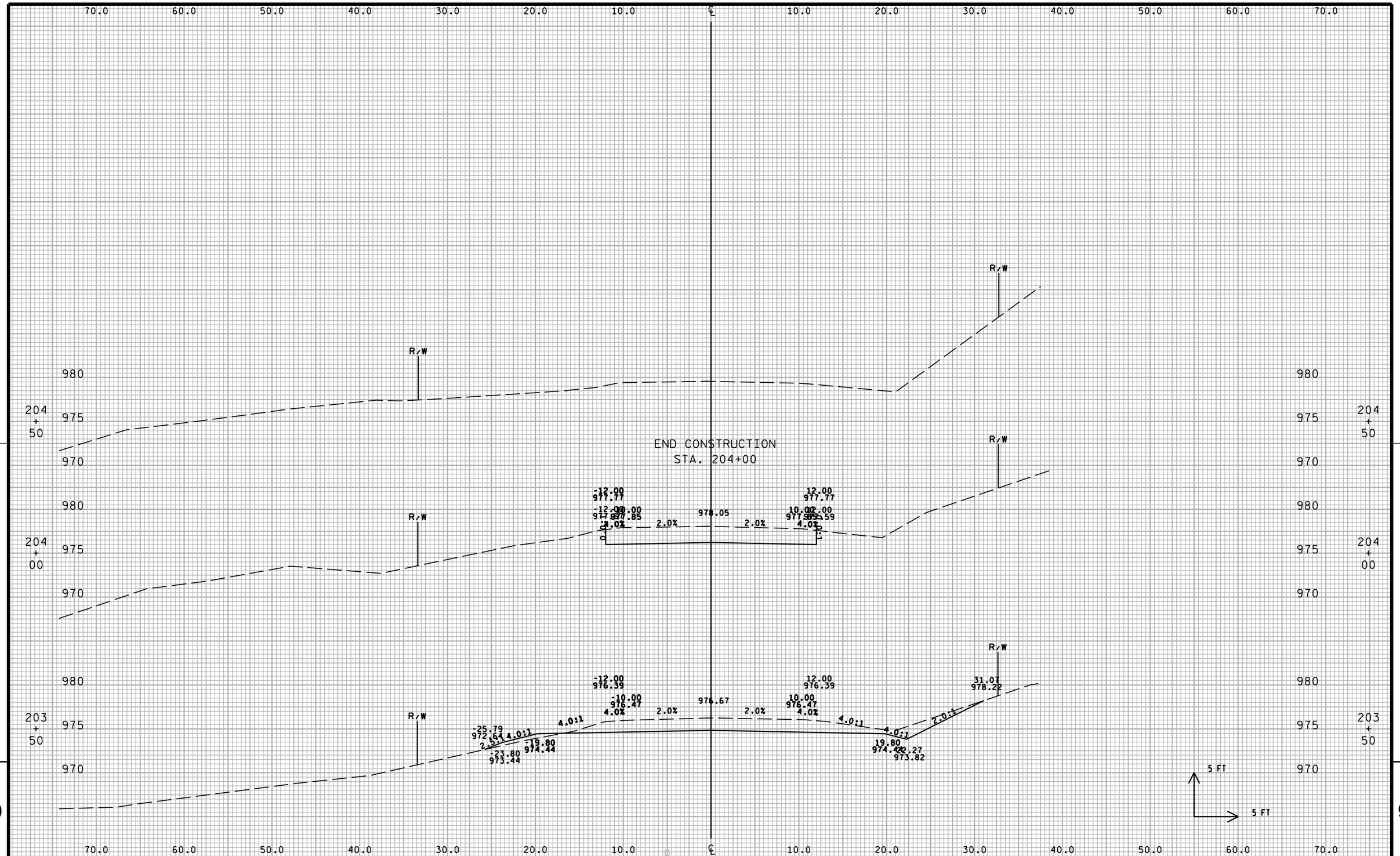

PROJECT NO:5648-00-72	HWY:CTH D	COUNTY: LAFAYETTE	CROSS SECTIONS:ENGLISH HOLLOW	SHEET 180	E

FILE NAME : $$....designfile....$$ PLOT DATE : $$...plottingdate...$$ PLOT BY : $$...plotuser...$$ PLOT NAME : PLOT SCALE : $$.....plotscale.....$$ WISDOT/CADDS SHEET 21

Notes

Wisconsin Department of Transportation

Dedicated people creating transportation solutions through innovation and exceptional service.

http://www.dot.wisconsin.gov