LAX JAN 13

PROJECT ID: 1643-05-75

WITH:

COUNTY: RICHLAND

INDEX OF SHEETS

Sheet No.	1	Title
Sheet No.		Typical Sections and Details
Sheet No.		Estimate of Quantities
Sheet No.		Miscellaneous Quantities
Sheet No.		~~Right of Way Plat~~
Sheet No.		Plan and Profile
Sheet No.		Standard Detail Drawings
Sheet No.		Sign Plates
Sheet No.		Structure Plans
Sheet No.		Computer Earthwork Data
Sheet No.		Cross Sections

TOTAL SHEETS = 288

STATE OF WISCONSIN
DEPARTMENT OF TRANSPORTATION

PLAN OF PROPOSED IMPROVEMENT

STATE PROJECT	FEDERAL PROJECT	
	PROJECT	CONTRACT
1643-05-75	———	—

STH 171 - RICHLAND CENTER CITY LIMITS

0.24 MILES EAST OF STH 171 TO HIVE DRIVE

USH 14

RICHLAND COUNTY

STATE PROJECT NUMBER

1643-05-75

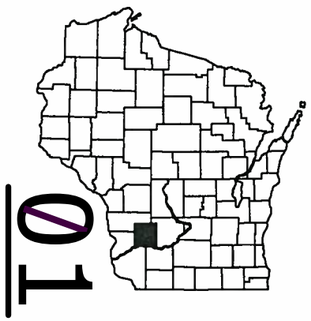

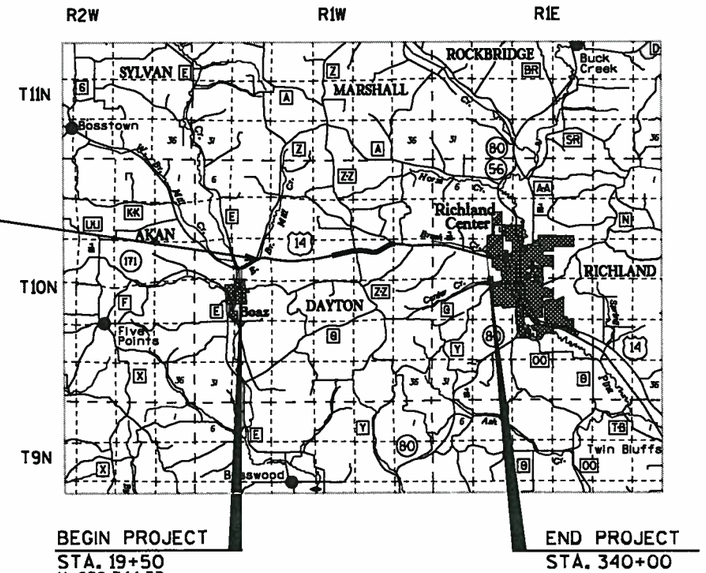

DESIGN DESIGNATION

A.D.T.	(2011)	=	4334
A.D.T.	(2031)	=	6026
D.H.V.		=	542
D.		=	58/42
T.		=	8.6%
DESIGN SPEED		=	60/45 MPH
ESALS		=	1,321,300

CONVENTIONAL SYMBOLS

COUNTY LINE		COMBUSTIBLE FLUIDS	CAUTION
CORPORATE LIMITS		UNDERGROUND UTILITIES	
PROPERTY LINE	P.L. + 58.1	GAS	G
LOT LINE		ELECTRIC	E
LIMITED EASEMENT		TELEPHONE OR TELEGRAPH	T
EXISTING RIGHT OF WAY		COMMUNICATIONS LINE	C
PROPOSED OR NEW R/W LINE		SERVICE PEDESTAL	
SURVEY LINE		POWER POLE	
SLOPE INTERCEPT		TELEPHONE POLE	
ORIGINAL GROUND		RAILROAD	
MARSH OR ROCK PROFILE (To be noted as such)	ROCK	SANITARY SEWER	SAN
		STORM SEWER	SS
MARSH AREA		WATER	W
		EXISTING CULVERT	
WOODED OR SHRUB AREA		PROPOSED CULVERT (Box or Pipe)	
		CULVERT (Profile View)	

LAYOUT SCALE 0 2.0 MI.

TOTAL NET LENGTH OF CENTERLINE = 6.070 MI.

Coordinates on this plan are referenced to the Wisconsin Department of Transportation air mapping work Coordinate System 'South' Zone.

ORIGINAL PLANS PREPARED BY

WISCONSIN TIMOTHY J. MOYER E-39823 SHEBOYGAN, WI PROFESSIONAL ENGINEER

11/1/2012

STATE OF WISCONSIN
DEPARTMENT OF TRANSPORTATION

PREPARED BY

Surveyor	WESTBROOK
Designer	DONOHUE & ASSOCIATES, INC.
Region Examiner	ROBERT WINTERTON, PE
Region Supervisor	OSCAR WINGER
Proj. Dev. Engineer	ROBERT WINTERTON, PE
C.O. Examiner	JE

APPROVED FOR THE DEPARTMENT

DATE: 11-01-2012 Oscar J. Winger (Signature)

E

FILE *DATE* *TIME*

WISDOT/CADDS SHEET 10

GENERAL NOTES

CROSS DRAIN PIPE ELEVATIONS, LENGTHS AND LOCATIONS AS SHOWN ON THE PLANS MAY BE ADJUSTED TO FIT EXISTING FIELD CONDITIONS AS DIRECTED BY THE ENGINEER.

THE EXACT LENGTHS OF CULVERT PIPES SHALL BE DETERMINED IN THE FIELD BY THE ENGINEER.

ALL CONCRETE PIPE SHALL HAVE THE APRON ENDWALL AND THE FIRST TWO PIPE JOINTS TIED AT THE JOINTS. (THREE JOINTS TOTAL)

DISTURBED AREAS WITHIN THE RIGHT-OF-WAY, EXCEPT THE AREAS WITHIN THE FINISHED SHOULDER POINTS ARE TO BE TOPSOILED, SEEDED, FERTILIZED AND MULCHED AS DIRECTED BY THE ENGINEER. ALL OTHER DISTURBED AREAS ARE TO BE TOPSOILED, SEEDED, FERTILIZED AND MULCHED AT THE CONTRACTORS EXPENSE.

WHEN THE QUANTITY OF THE ITEM OF BASE OR SURFACE COURSE IS MEASURED FOR PAYMENT BY THE TON THE DEPTH OR THICKNESS OF THE COURSE SHOWN ON THE PLANS IS APPROXIMATE AND THE ACTUAL THICKNESS WILL DEPEND ON THE DISTRIBUTION OF MATERIAL AS DIRECTED BY THE ENGINEER.

THE EXACT LOCATION AND WIDTHS OF PRIVATE AND COMMERICAL DRIVEWAYS ARE TO BE DETERMINED BY THE ENGINEER IN THE FIELD.

PRIOR TO CONSTRUCTION THE CONTRACTOR SHALL CONTACT THE COUNTY SURVEYOR CONCERNING MONUMENT AND PROPERTY CORNER PRESERVATION. LANDMARK REFERENCE MONUMENTS SHALL BE PERPETUATED BY THE RICHLAND COUNTY SURVEYOR.

THERE IS A HISTORICAL MONUMENT AT THE SOUTH EAST 1/4 CORNER OF NORTH WEST 1/4 CORNER OF SECTION 16, T10N, R01W LOCATED AT STATION 69+47, LT. THE CONTRACTOR SHALL NOT DISTURB THE MONUMENT WITHOUT PRIOR APPROVAL OF THE COUNTY SURVEYOR. IF THE CONTRACTOR DISTURBS THE MONUMENT WITHOUT THE PRIOR APPROVAL OF THE COUNTY SURVEYOR, THE CONTRACTOR SHALL RESET THE MONUMENT AT THE CONTRACTOR'S OWN COST AND EXPENSE.

ALL DISTANCES ARE GROUND DISTANCES. TIES ARE HORIZONTAL UNLESS SHOWN OTHERWISE.

THE LOCATIONS OF EXISTING AND PROPOSED UTILITY INSTALLATIONS AS SHOWN ON THE PLANS ARE APPROXIMATE. THERE MAY BE OTHER UTILITY INSTALLATIONS WITHIN THE PROJECT AREA THAT ARE NOT SHOWN.

FURNISHING AND PLACING STRUCTURE NAME PLATES IS INCIDENTIAL TO WORK. PRIOR TO ANY STRUCTURE WORK ALL STRUCTURES MUST BE INSPECTED FOR SWALLOW NESTS. APPROPRIATE ACTIONS SHALL BE IN PLACE TO AVOID IMPACTS TO SWALLOWS.

NO TREES OR SHRUBS ARE TO BE REMOVED WITHOUT APPROVAL OF THE ENGINEER.

PRIOR TO PLACEMENT OF STEEL PLATE BEAM GUARD, SHOULDERS SHALL BE IN PLACE, SHAPED AND COMPACTED.

EXCAVATION BELOW SUBGRADE (EBS) LOCATIONS ARE AS SHOWN ON THE CROSS SECTIONS AND AS DETERMINED BY THE ENGINEER.

EXCAVATION BELOW SUBGRADE (EBS) IS NOT USED TO BALANCE YARDAGE. EBS IS SHOWN ON THE CROSS SECTIONS, AND IS MEASURED AND PAID FOR AS COMMON EXCAVATION. EXACT LOCATIONS OF EBS WILL BE DETERMINED BY THE ENGINEER IN THE FIELD.

ALL ASPHALTIC SIDE ROADS AND PRIVATE AND COMMERCIAL ENTRANCES SHALL BE MATCHED WITH A SAWED JOINT.

EROSION CONTROL IS SHOWN ON THE EROSION CONTROL PLAN SHEET AND IN THE SUMMARY OF MISCELLANEOUS QUANTITIES.

MARKERS CULVERT END ARE TO BE PLACED WITHIN 1 FT. OF THE END OF EACH SPECIFIED PIPE. PIPE LOCATIONS ARE AS SHOWN IN THE MISCELLANEOUS QUANTITIES.

ALL CURB AND GUTTER RADII SHOWN ON THE PLANS ARE MEASURED TO THE FLANGE.

ASPHALT PAVING NOTES

HMA PAVEMNT TYPE E-3 SHALL BE PLACED IN TWO LIFTS. THE LOWER LAYER SHALL BE BETWEEN 2.5" TO 2.75" AND THE UPPER LAYER SHALL BE BETWEEN 2" TO 1.75".

HMA PAVEMENT QUANTITIES ARE BASED ON 112 LBS/SY/IN.

THE CONTRACTOR'S PAVING OPERATIONS SHALL BE CONSISTENT WITH THE PLAN TYPICAL SECTIONS AND CONSTRUCTED TO PREVENT HMA LONGITUDINAL JOINTS FROM BEING LOCATED WITHIN A DRIVING, TURNING, PASSING OR PARKING LANE.

TACK COAT SHALL BE PLACED PRIOR TO PLACEMENT OF EACH ASPHALTIC LAYER.

ASPHALTIC MATERIAL SHALL BE PG58-28 FOR EACH LAYER.

UTILITIES

UTILITY: ELECTRIC
ALLIANT ENERGY
ATTN: JASON HOGAN
4902 N. BILTMORE LANE
SUITE 1000
MADISON, WI 53718-2148
PHONE: (608) 458-4871

UTILITY: ELECTRIC
DAIRYLAND POWER COOPERATIVE
ATTN: KURT CHILDS
PO BOX 817
3200 EAST AVE S
LA CROSSE, WI 54602
PHONE: (608) 788-4000

UTILITY: ELECTRIC
RICHLAND ELECTRIC COOPERATIVE
ATTN: LARRY HALLETT
1027 N JEFFERSON STREET
RICHLAND CENTER, WI 53581
PHONE: (608) 647-3173

UTILITY: CABLE TELEPHONE TV
CHARTER COMMUNICATIONS
ATTN: MATT BROWN
2701 DANIELS STREET
MADISON, WI 53718
PHONE: (608) 274-3822 EX.6687
MOBILE: (608) 576-2613

UTILITY: TELECOMMUNICATIONS
GENUINE TELECOM
ATTN: BRANDON KINNEY
PO BOX 409
1027 N JEFFERSON STREET
RICHLAND CENTER, WI 53581
PHONE: (608) 604-6062

UTILITY: TELECOMMUNICATIONS
FRONTIER COMMNICATIONS
ATTN: LARRY FORSETH
301 W DIVISION STREET
DODGEVILLE, WI 53533
PHONE: (608) 935-2387

UTILITIES: SANITARY & WATER
RICHLAND CENTER UTILITIES
ATTN: ANDREW ZIMMER
MSA PROFESSIONAL SERVICES INC
PHONE: (608) 355-8968

UTILITY: GAS
WE ENERGIES
ATTN: ANTHONY COOK
PO BOX 66
1251 W MAIN STREET
SUN PRAIRIE, WI 53590
MOBILE: (608) 214-6485

DNR CONTACT
WICONSIN DNR, SOUTHERN DISTRICT
ATTN: CATHY BLASER
3911 FISH HATCHERY ROAD
FITCHBURG, WI 53711
PHONE: (608) 275-3481

WISDOT DESIGN PROJECT MANAGER
WISDOT SW REGION
ATTN: ROBERT WINTERTON
PHONE: (608) 789-7879

DESIGN CONTACT
DONOHUE & ASSOCIATES, INC.
ATTN: TIMOTHY MOYER
PHONE: (920) 803-7380

ROADWAY BORING INFORMATION

NOTES: ALL DEPTHS ARE IN INCHES.
BORING # WITH "A" ARE LOCATED IN DIVIDED WB LANES.
LOG MILE 0.0 = INTERSECTION OF STH 171
LOG MILE 2.1 = START DIVIDED HIGHWAY
LOG MILE 3.1 = INTERSECTION CTH ZZ
LOG MILE 4.3 = END DIVIDED HIGHWAY
LOG MILE 6.6 = HIVE DRIVE

BORING #	MILE	OFFSET	BITUMINUS	CONCRETE	BASE	SUBGRADE
3A	0.50	9' RT	5.0	8.0	12	SAND
4	0.70	3' LT	3.5	7.0	3	SAND
5	1.00	3' RT	4.0	8.0	6	SAND
6	1.20	9' LT	5.0	8.5	7	SAND
7	1.40	17' RT	0.0	0.0	24	SAND
8	1.60	3' LT	4.5	7.5	0	SAND
9	1.80	9' RT	2.5	9.0	6	SAND
10	2.20	CL	4.5	8.0	5	SAND
11	2.40	3' RT	6.0	8.0	5	SAND
11A	2.40	15' LT	3.5	9.0	3	SAND
12	2.50	15' RT	5.0	8.0	3	SAND
12A	2.50	21' LT	3.5	9.0	3	SAND
13	2.80	28' RT	2.5	0.0	18	SAND
13A	2.80	3' RT	0.0	0.0	16	SILT
14	3.00	3' RT	4.5	8.0	7	SAND
14A	3.00	4' LT	8.0	8.0	6 *	SILT
15	3.20	28' RT	0.0	0.0	24	SAND
15A	3.20	9' LT	5.0	7.0	9 *	SILT
16	3.45	3' RT	6.0	7.0	7	SAND
16A	3.45	29' LT	0.0	0.0	18	SAND
17	3.60	21' RT	3.5	7.5	6	SAND
18	3.80	9' RT	6.0	8.0	2	SAND
18A	3.80	3' RT	6.0	9.0	10 *	SAND
19	4.00	3' RT	4.5	7.0	5	SAND
19A	4.00	29' LT	0.0	0.0	12	SAND
20	4.20	CL	6.0	0.0	18	SAND
21	4.40	17' LT	0.0	0.0	18	SAND
22	4.60	3' RT	4.5	9.0	8	SAND
23	4.80	9' LT	4.5	9.5	9	SAND
24	5.05	3' RT	5.0	8.0	12	SAND
25	5.35	9' LT	4.5	9.0	12	SAND
26	5.60	3' RT	4.0	9.0	12	SAND
27	5.90	9' RT	4.0	8.0	9	SAND
28	6.10	17' LT	0.0	0.0	24	SAND
29	6.30	3' LT	4.0	10.0	10	SAND
30	6.50	17' RT	0.0	0.0	8	SAND

* BASE LAYER BETWEEN BITUMINUS AND CONCRETE

DIGGERS HOTLINE
Call 811 3 Work Days Before You Dig
or Toll Free (800) 242-8511
Hearing Impaired TDD (800) 542-2289
www.DiggersHotline.com

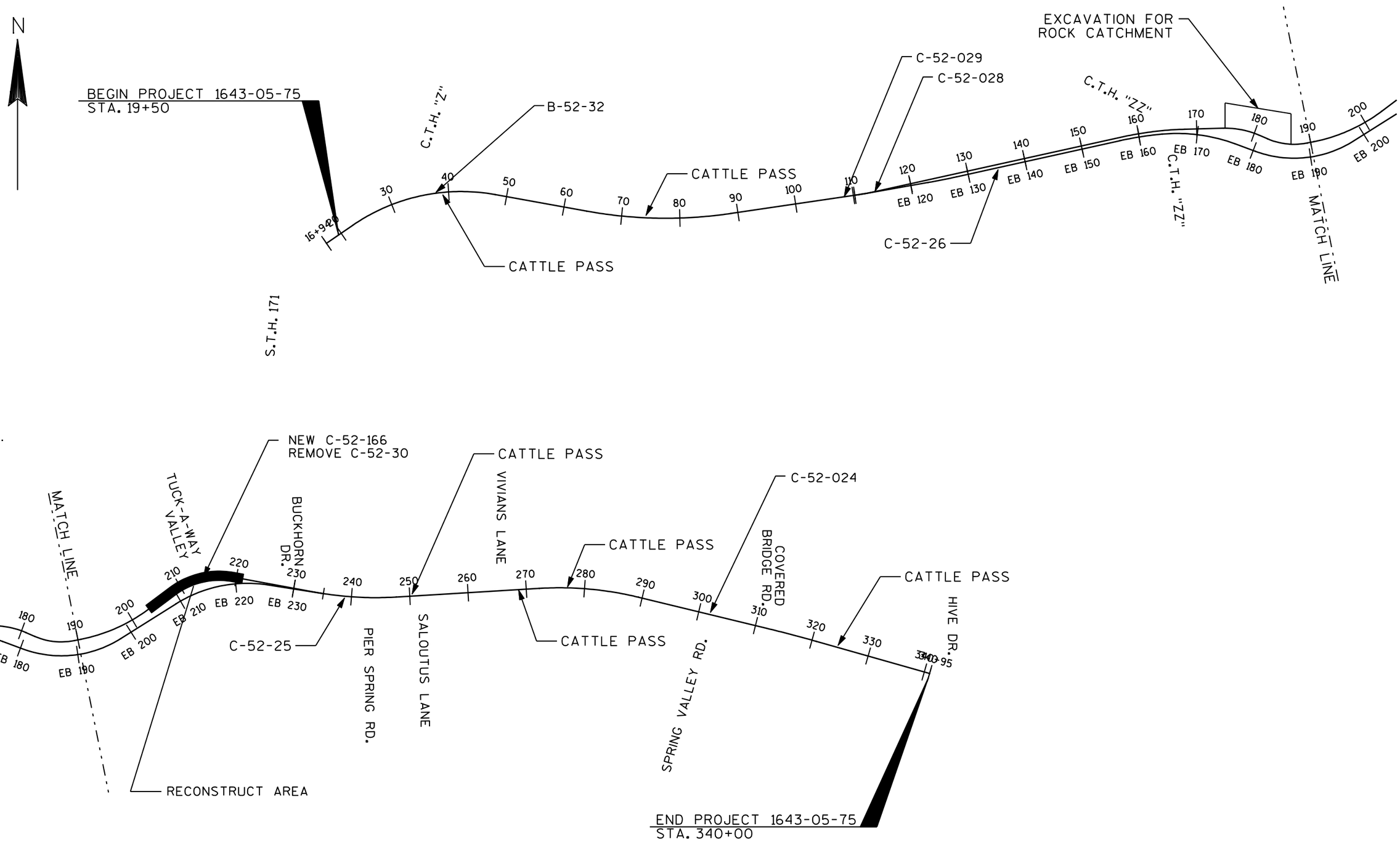

PROJECT NO: 1643-05-75	HWY: USH 14	COUNTY: RICHLAND	PROJECT OVERVIEW	SCALE, FEET 0 800 1600	SHEET 3	E

2

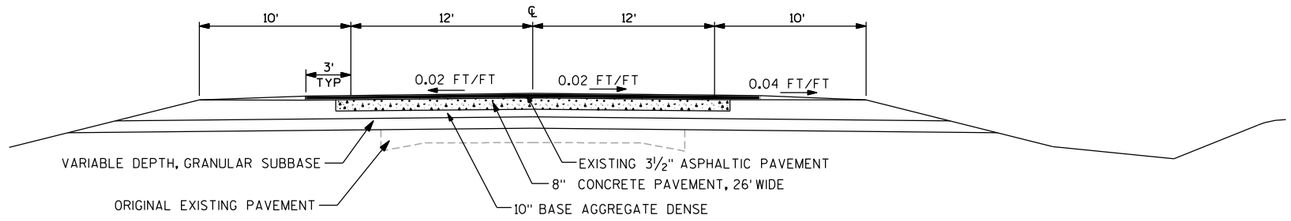

EXISTING TYPICAL SECTION

USH 14

STA. 19+50 - 112+00
STA. 230+00 - 340+00

SEE GENERAL NOTES FOR TABLE OF ROADWAY BORING INFORMATION.

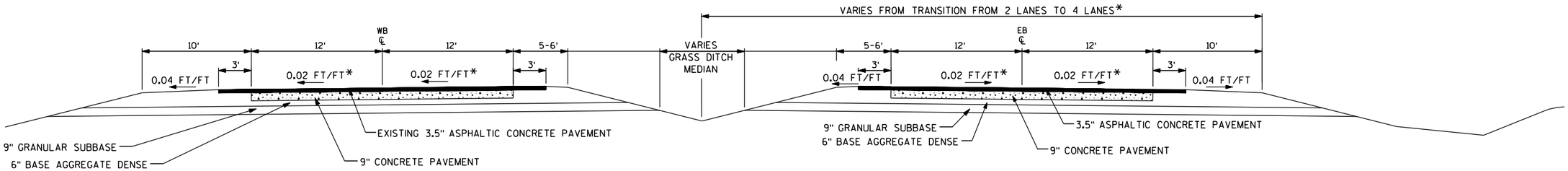

EXISTING TYPICAL SECTION

USH 14

WESTBOUND
(STA. 112+00 - 230+00)
EASTBOUND
(STA. 114+86.50 - 230+00)

* SLOPE VARIES

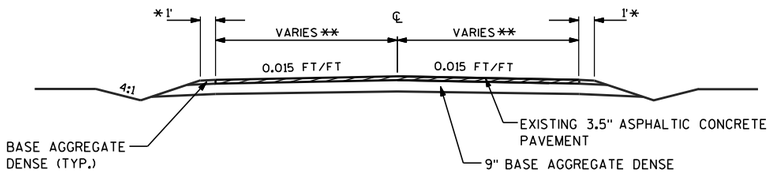

EXISTING TYPICAL SECTION

*AT ONLY THE INTERSECTION, HAVE EXISTING 30" CURB AND GUTTER.
**LANE WIDTHS VARY

CTH Z	12 FT LANES & 2 FT SHOULDERS
*CTH ZZ	NB 9 FT LANES & SB 11 FT LANES
TUCK A WAY VALLEY	N OF WB SEC. OF USH 14, 10 FT LANES & S OF WB SEC. OF USH 14, 22 FT LANES & 4 FT SHOULDERS
BUCKHORN DRIVE	11 FT LANES & 0.5 FT SHOULDERS
SALOUTUS	11 FT LANES & 0.5 FT SHOULDERS
*SPRING VALLEY ROAD	9 FT LANES
*COVERED BRIDGE ROAD	12 FT LANES

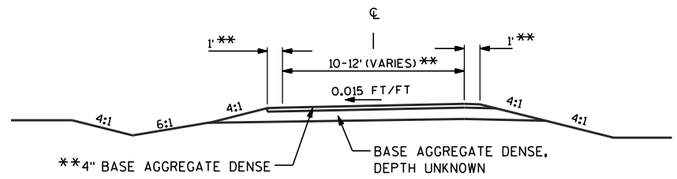

EXISTING TYPICAL SECTION

**VIVIAN LANE, 12 FT LANE & 2 FT SHOULDERS
KALISH LANE, 11 FT LANE

PROJECT NO: 1643-05-75	HWY: USH 14	COUNTY: RICHLAND	TYPICAL SECTIONS	SHEET 4	E

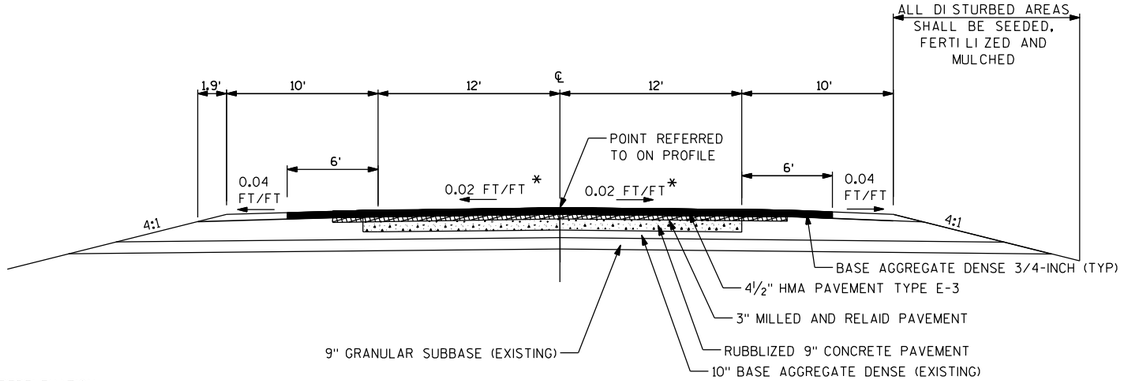

SUPERELEVATION

MAINLINE

e= 4.1%	STA. 20+46.84 - 50+05.76
e= -2.1%	STA. 64+44.59 - 88+30.73
e= -2.7%	STA. 233+64.52 - 247+26.01
e= 2.7%	STA. 269+93.12 - 291+92.49

TYPICAL FINISHED SECTION

USH 14

STA 19+50 - STA 112+00
STA 230+00 - STA 340+00

EXCAVATION BELOW SUBGRADE

IN AREAS WHERE EXCAVATION BELOW SUBGRADE (EBS) IS REQUIRED USE THE FOLLOWING PAVEMENT SECTION:

4 1/2-INCHES HMA PAVEMENT TYPE E-3 OVER
10-INCHES BASE AGGREGATE DENSE 1 1/4-INCH OVER
16-INCHES SELECT CRUSHED MATERIAL

SECTION WIDTHS IN EBS LOCATIONS SHALL MATCH THE WIDTHS SHOWN IN THE TYPICAL SECTION FOR THAT STATION RANGE.

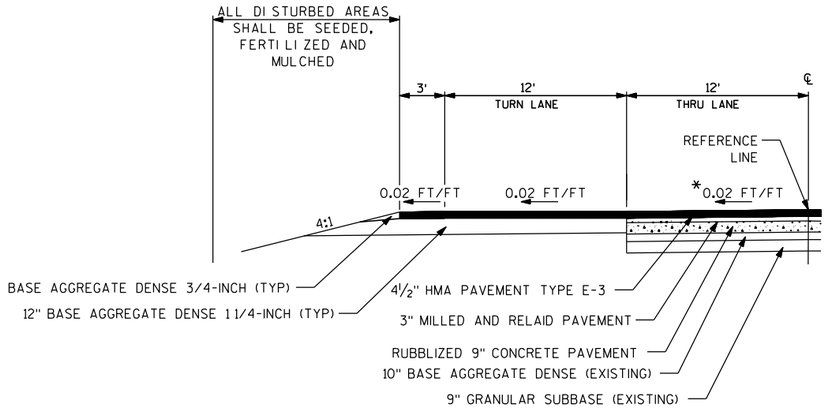

HALF TYPICAL FINISHED SECTION FOR RIGHT AND LEFT TURN LANES

USH 14 AT CTH Z, CTH ZZ AND COVERED BRIDGE ROAD

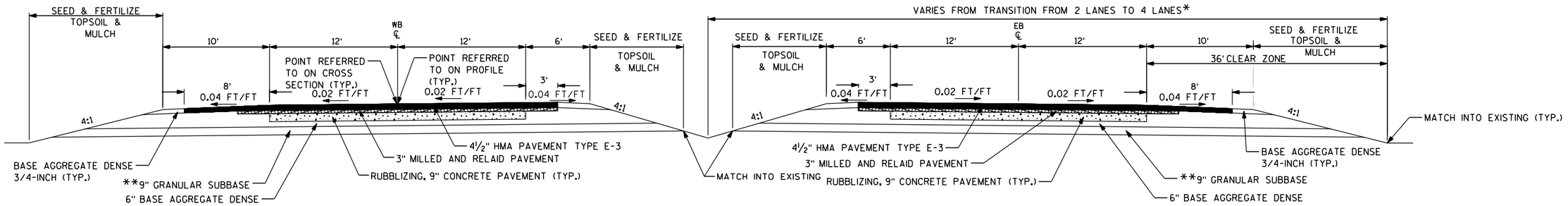

TYPICAL FINISHED SECTION

USH 14

* TRANSITION
TRANSITION TO FOUR LANES FROM TWO LANES
ALONG WESTBOUND STARTS AT STA. 112+40.20 ENDS APPROX. AT STA. 123+53.20

** GRANULAR FILL AT STA 112+00 TO 142+00 WESTBOUND
STA 114+86.50 TO 142+00 EASTBOUND

WESTBOUND
STA 112+00 - STA 206+80
STA 221+10 - 230+00
EASTBOUND
STA EB 114+86.50 - STA EB 230+00

SUPERELEVATION

WESTBOUND

e= -2.7%	STA. 110+38.15 - 114+22.22
e= 2.7%	STA. 154+63.29 - 170+50.05
e= 6.0%/-6.0%/-4.5%	STA. 172+84.19 - 203+74.47
e= 6.0%	STA. 206+64.62 - 221+22.65

EASTBOUND

e= -2.7%	STA. 108+33.90 - 114+86.50
e= 2.7%/4.5%/-5.1%	STA. 157+31.01 - 200+24.94
e= 5.1%	STA. 209+16.85 - 227+19.11

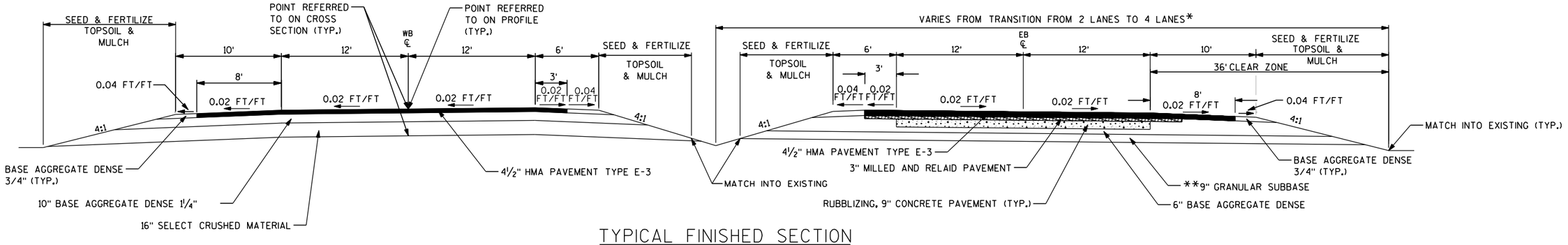

TYPICAL FINISHED SECTION

USH 14

WESTBOUND
STA 206+80 - STA 221+10

SUPERELEVATION

WESTBOUND

e= -2.7%	STA. 110+38.15 - 114+22.22
e= 2.7%	STA. 154+63.29 - 170+50.05
e= 6.0%/-6.0%/-4.5%	STA. 172+84.19 - 203+74.47
e= 6.0%	STA. 206+64.62 - 221+22.65

EASTBOUND

e= -2.7%	STA. 108+33.90 - 114+86.50
e= 2.7%/4.5%/-5.1%	STA. 157+31.01 - 200+24.94
e= 5.1%	STA. 209+16.85 - 227+19.11

EXCAVATION BELOW SUBGRADE

IN AREAS WHERE EXCAVATION BELOW SUBGRADE (EBS) IS REQUIRED USE THE FOLLOWING PAVEMENT SECTION:

4 1/2-INCHES HMA PAVEMENT TYPE E-3 OVER
10-INCHES BASE AGGREGATE DENSE 1 1/4-INCH OVER
16-INCHES SELECT CRUSHED MATERIAL

SECTION WIDTHS IN EBS LOCATIONS SHALL MATCH THE WIDTHS SHOWN IN THE TYPICAL SECTION FOR THAT STATION RANGE.

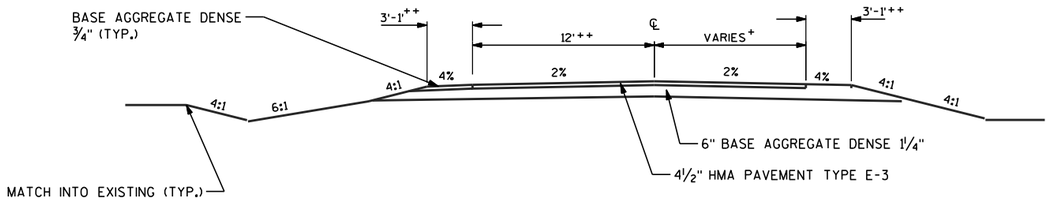

PROPOSED TYPICAL SECTION - SIDE ROAD SECTIONS

+REFER TO SDD 9A 1-12a & INTERSECTION DETAIL
++LANE & SHOULDER WIDTHS VARY
SECTIONS WITH EXISTING CURB & GUTTER SHALL BE REPLACED
ALL SIDE ROADS SHALL TAPER TO EXISTING TYPICAL SECTIONS

CTH Z	BUCKHORN DRIVE	COVERED BRIDGE ROAD
CTH ZZ	SALOUTUS	VIVIAN LANE
TUCK A WAY VALLEY	SPRING VALLEY ROAD	KALISH LANE
PIER SPRING ROAD		

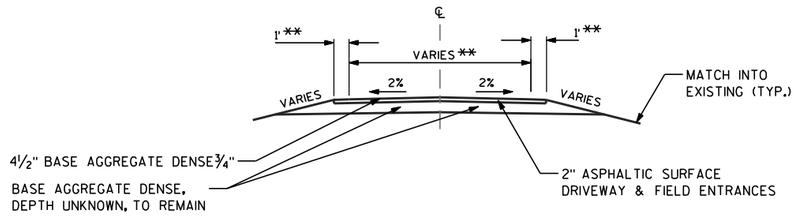

TYPICAL P.E. & F.E. HALF SECTION
**SEE PLAN SHEETS FOR DETAILS
AGGREGATE DRIVEWAYS ASPHALT DRIVEWAYS

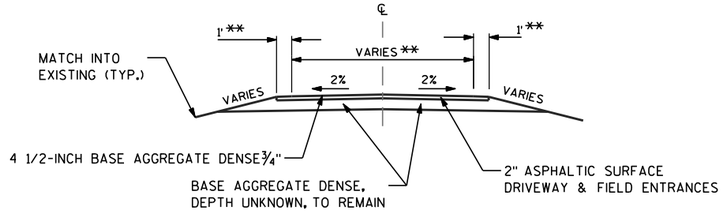

TYPICAL C.E. HALF SECTION
**SEE PLAN SHEETS FOR DETAILS
AGGREGATE DRIVEWAYS ASPHALT DRIVEWAYS

PROJECT NO: 1643-05-75	HWY: USH 14	COUNTY: RICHLAND	TYPICAL SECTIONS	SHEET 6	E

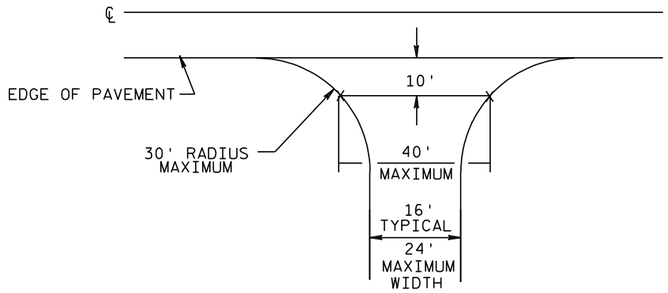

TYPICAL DRIVEWAY DETAIL

(NON-COMMERCIAL RURAL)

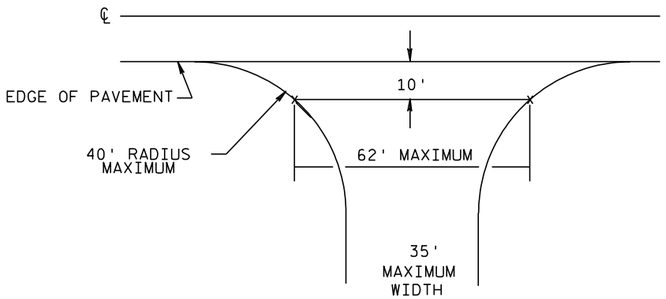

TYPICAL DRIVEWAY DETAIL

(COMMERCIAL RURAL)

RURAL DRIVEWAY DETAIL - ASPHALT

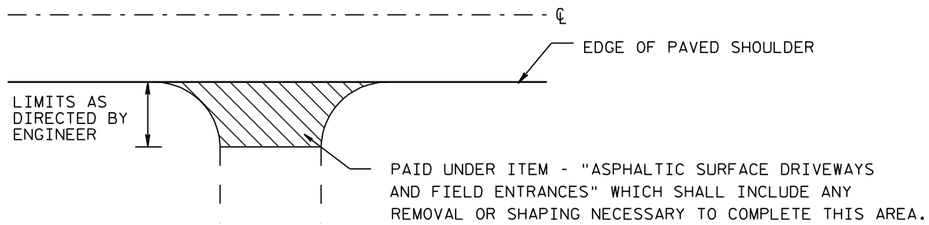

ANY ADDITIONAL BASE AGG. DENSE REQ'D. SHALL BE PAID UNDER ITEM - "BASE AGGREGATE DENSE 1 1/4-INCH"

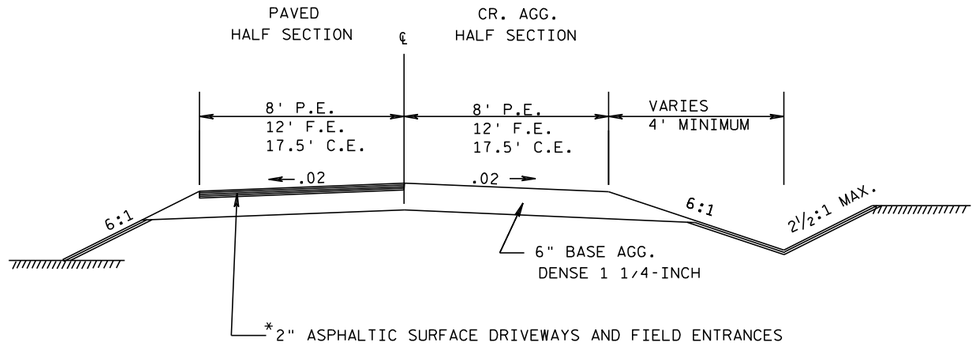

* OR MATCH EXIST. ASPH. DEPTH

TYPICAL SECTION
FOR PRIVATE ENTRANCES

NOTE:
DRIVEWAY PROFILES NOT EXPECTED TO EXCEED 10%. PLACE LOW POINT OF DRIVEWAY PROFILE OVER DITCH FLOW LINE.

2

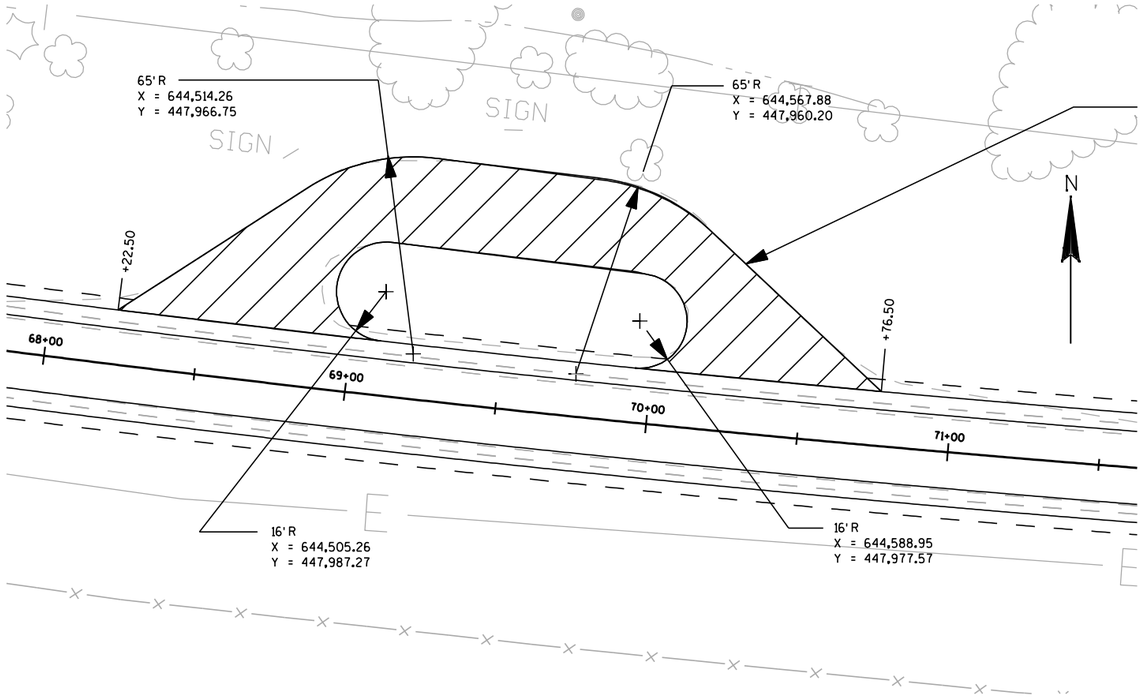

HISTORICAL MARKING PARKING AREA DETAIL

MILL 3" EXISTING ASPHALTIC PAVEMENT. PLACE 3" ASPHALTIC SURFACE DRIVEWAY & FIELD ENTRANCES

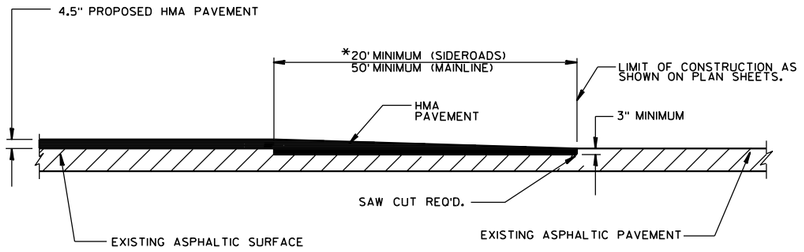

REMOVING ASPHALTIC SURFACE BUTT JOINTS

* EXACT DIMENSIONS TO BE DETERMINED BY ENGINEER IN THE FIELD.

LOCATIONS

USH 14	19+50
USH 14	340+00
CTH Z	
CTH ZZ	
BUCKHORN DRIVE	
PIER SPRING ROAD	
SALOUTUS LANE	
SPRING VALLEY ROAD	
COVERED BRIDGE ROAD	

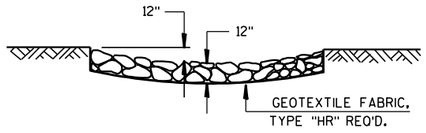

SECTION A-A

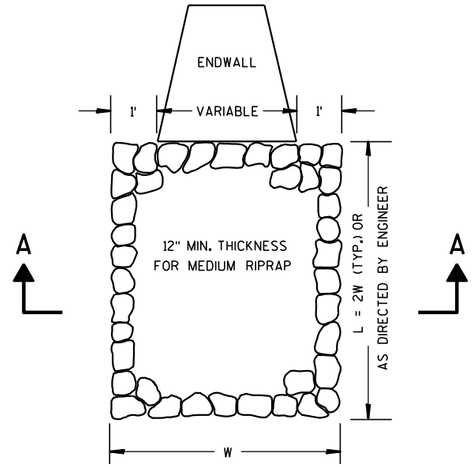

MEDIUM RIPRAP TREATMENT AT CULVERTS

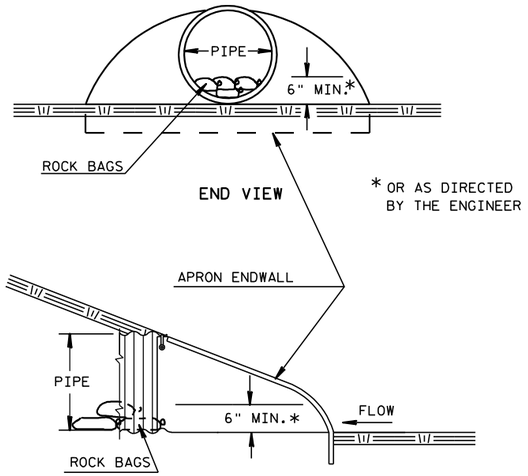

SIDE VIEW

CULVERT PIPE CHECKS

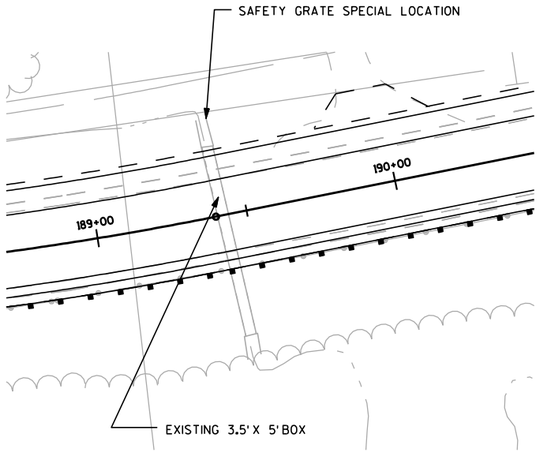

PLAN LOCATION

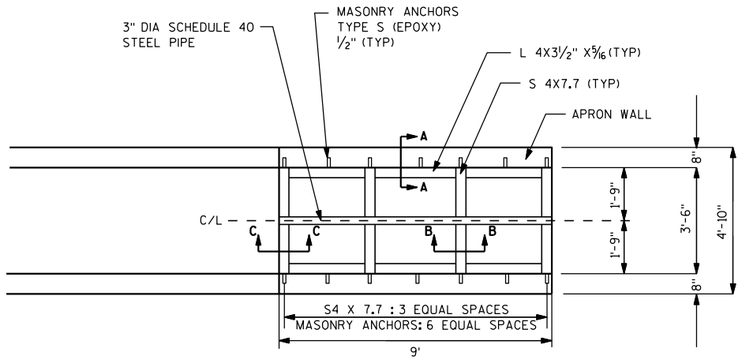

PLAN

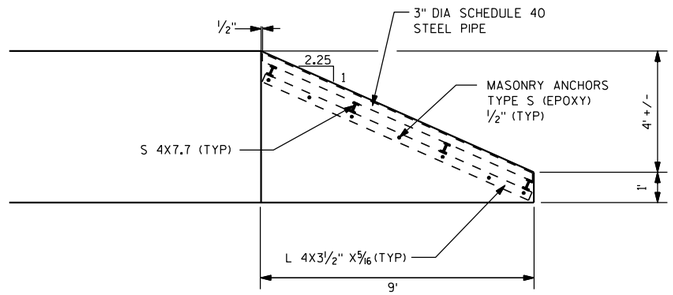

ELEVATION

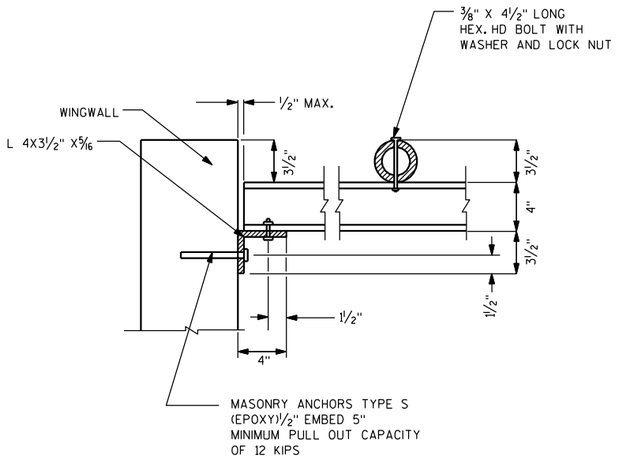

SECTION A-A

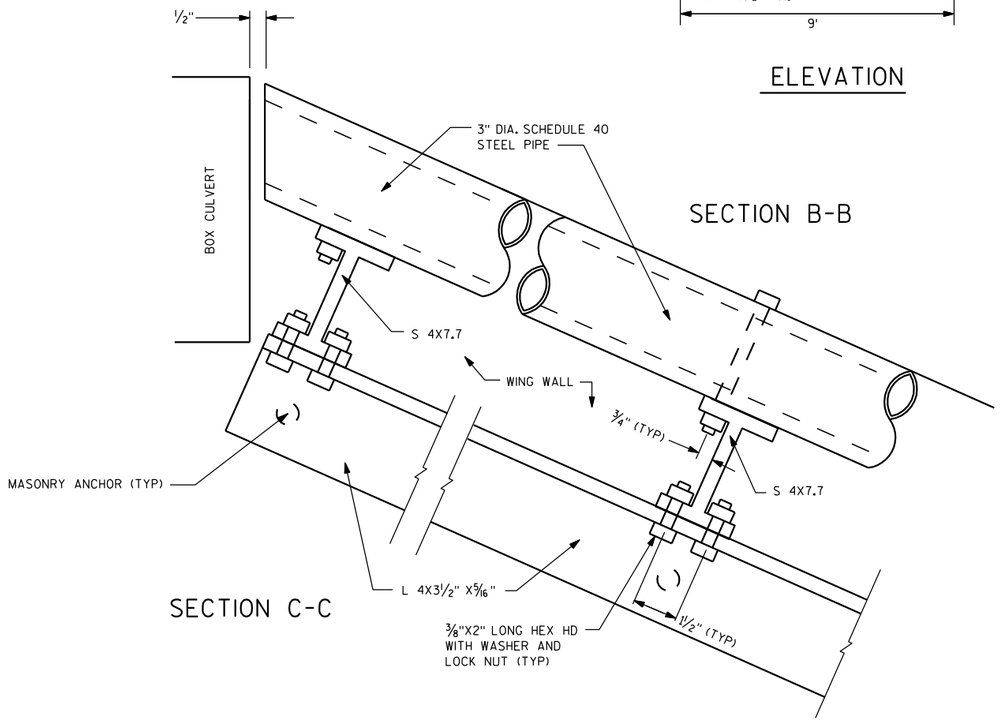

SECTION B-B

SECTION C-C

MATERIALS

ALL MATERIAL, EXCEPT STEEL PIPE, SHALL CONFORM TO THE REQUIREMENT OF ASTM A709 GRADE 36.

STEEL PIPE MATERIAL SHALL CONFORM TO THE REQUIREMENT OF ASTM A53 GRADE B OR ASTM A501.

GENERAL NOTES

DRAWINGS SHALL NOT BE SCALED.

DIMENSIONS SHOWN ARE BASED ON THE EXISTING AS-BUILTS AND SHALL BE FIELD VERIFIED PRIOR TO FABRICATION.

ALL MATERIALS, INCLUDING ANCHORS, WASHERS, NUT, AND BOLTS, SHALL BE GALVANIZED IN ACCORDANCE WITH ASTM A123. PRIOR TO GALVANIZING, ALL STEEL SHALL BE GIVEN A NO. 6 BLAST CLEANING BY S.S.P.C. SPECIFICATIONS.

SAFETY GRATE SPECIAL SHALL BE PAID FOR AS EACH. SUCH PRICE SHALL INCLUDE ALL HARDWARE, MATERIAL, DRILLING, INSTALLATION AND INCIDENTALS.

ESTIMATED QUANTITIES

(FOR INFORMATION ONLY. SAFETY GRATE SPECIAL PAID FOR BY THE EACH)

STRUCTURAL STEEL CARBON_____350 LB
MASONRY ANCHORS TYPE S1/2"_____ 14 EACH

PROJECT NO: 1643-05-75	HWY: USH 14	COUNTY: RICHLAND	CONSTRUCTION DETAILS - SAFETY GRATE SPECIAL	SHEET 10	E

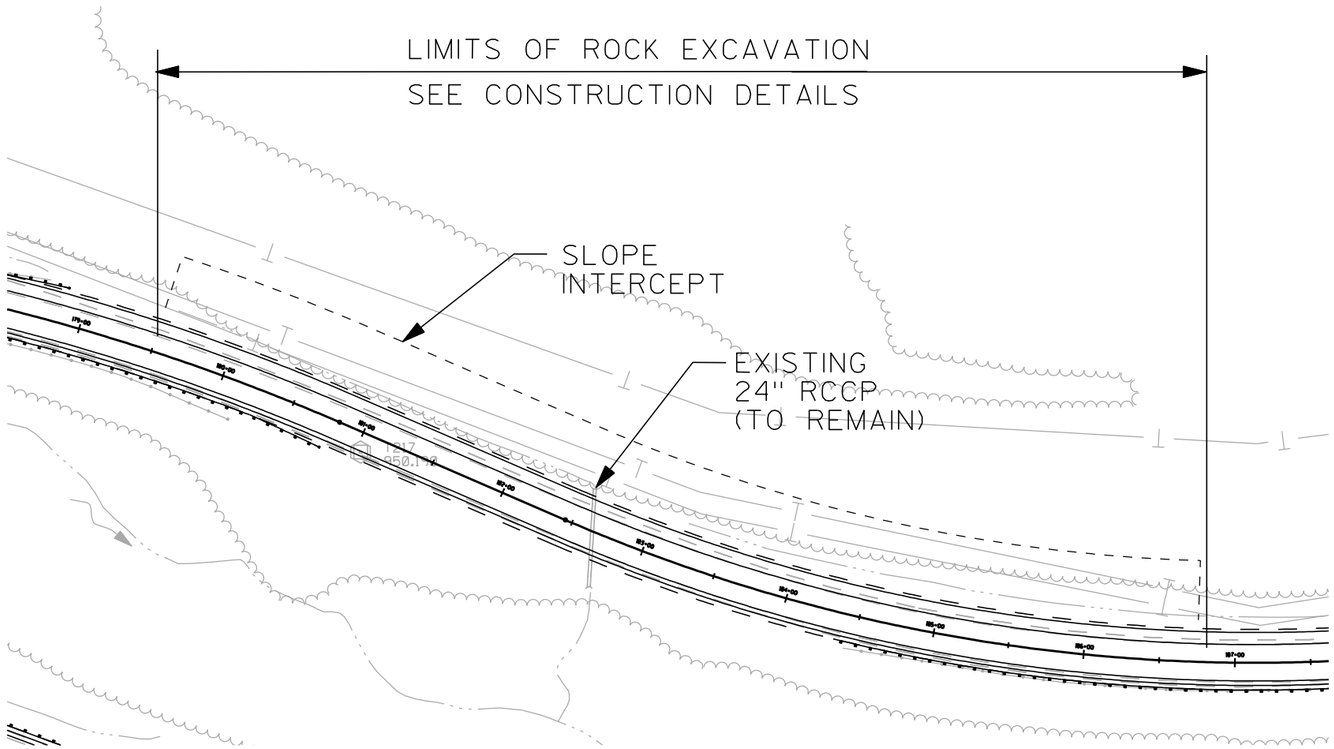

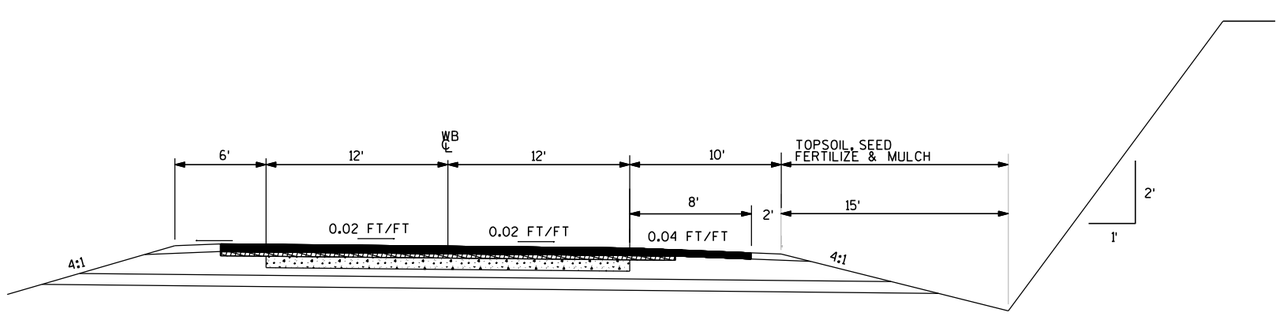

ROCK EXCAVATION CONSTRUCTION DETAIL

USH 14
STA. 179+50 - STA. 186+50
LOOKING WEST

PROJECT NO: 1643-05-75	HWY: USH 14	COUNTY: RICHLAND	CONSTRUCTION DETAILS	SHEET 11	E

2

N

XXXXXXXXXXXX

STA "B" 122+20.00
MATCH EXISTING

B 122+00

12'

CTH "Z"

12'

ASPHALTIC FLUME

+26.6+, 12' LT
755.50

STA 33+26.4
94.00' LT

B 121+00

STA 34+82.27
84.00' LT

+75.8, 12' LT
756.36

R 70'

R 60'

+31.1, 54.4' LT
755.69

ASPHALTIC FLUME

100' TAPER

77.27'

CONCRETE CURB & GUTTER 6-INCH
SLOPED 36-INCH TYPE D

ASPHALTIC FLUME

755.47

+82.3, 24' LT

2'

755.47

+81.6, 24' LT

32+00

12'

754.96

+22.4, 12' LT

33+00

B 120+00

34+00

35+00

36+00

756.59

+59.4, 12' LT

37+00

12'

38+00

USH 14

INTERSECTION, TYPE B2

STA 33+98.6 =
STA B 120+00

PROJECT NO: 1643-05-75	HWY: USH 14	COUNTY: RICHLAND	INTERSECTION DETAIL - CTH Z	SHEET 12	E

FILE NAME : L:\Projects\11099\Dwg\021102_id.dgn PLOT DATE : 08/23/12 PLOT BY : jbainter PLOT NAME : PLOT SCALE : 1:40

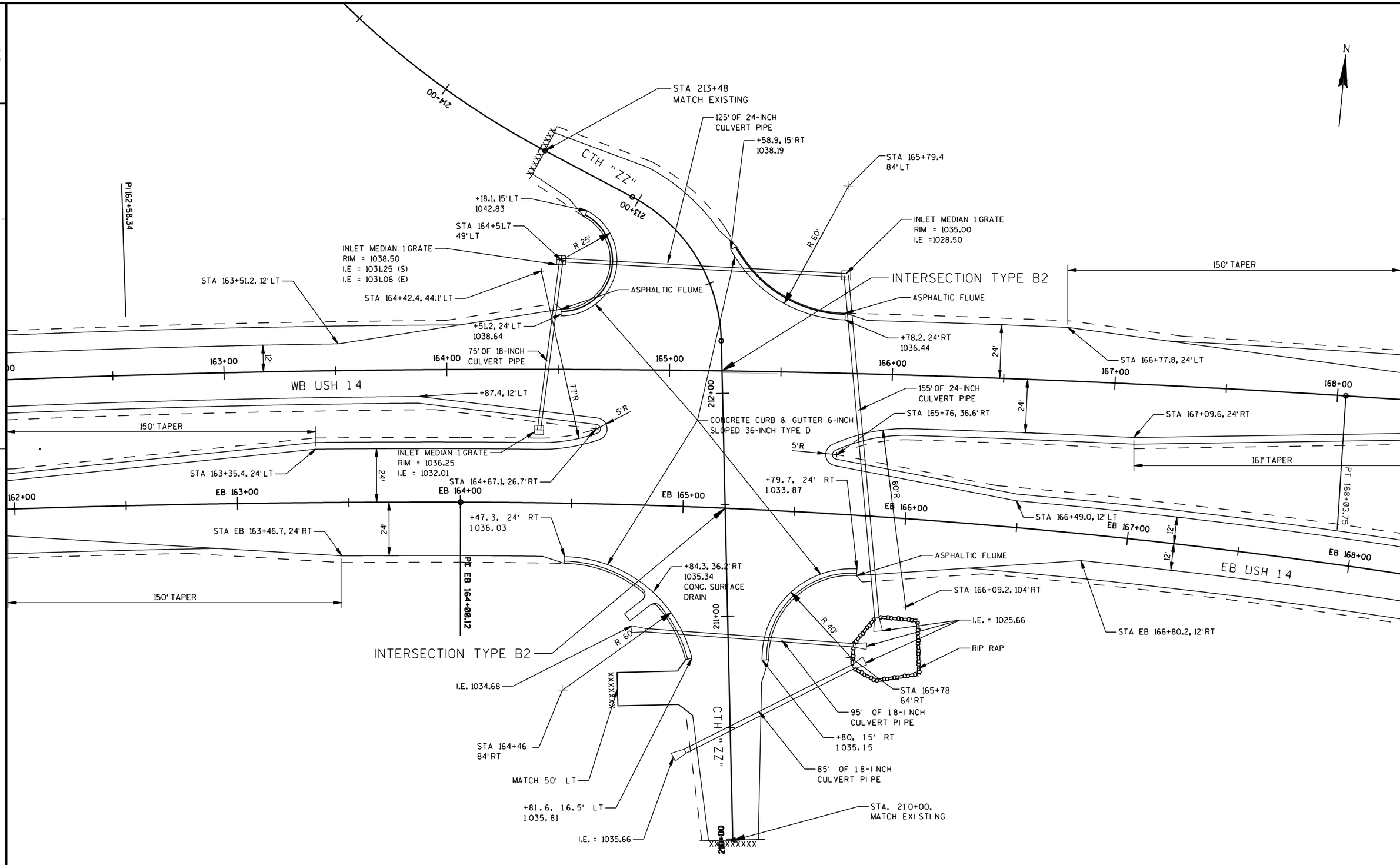

PROJECT NO: 1643-05-75	HWY: USH 14	COUNTY: RICHLAND	INTERSECTION DETAIL - CTH ZZ	SHEET 13	E

FILE NAME : L:\Projects\11099\dwg\021103_id.dgn PLOT DATE : 11/01/12 PLOT BY : tmoyer PLOT NAME : PLOT SCALE : 1:40

WISDOT/CADDS SHEET 42

2

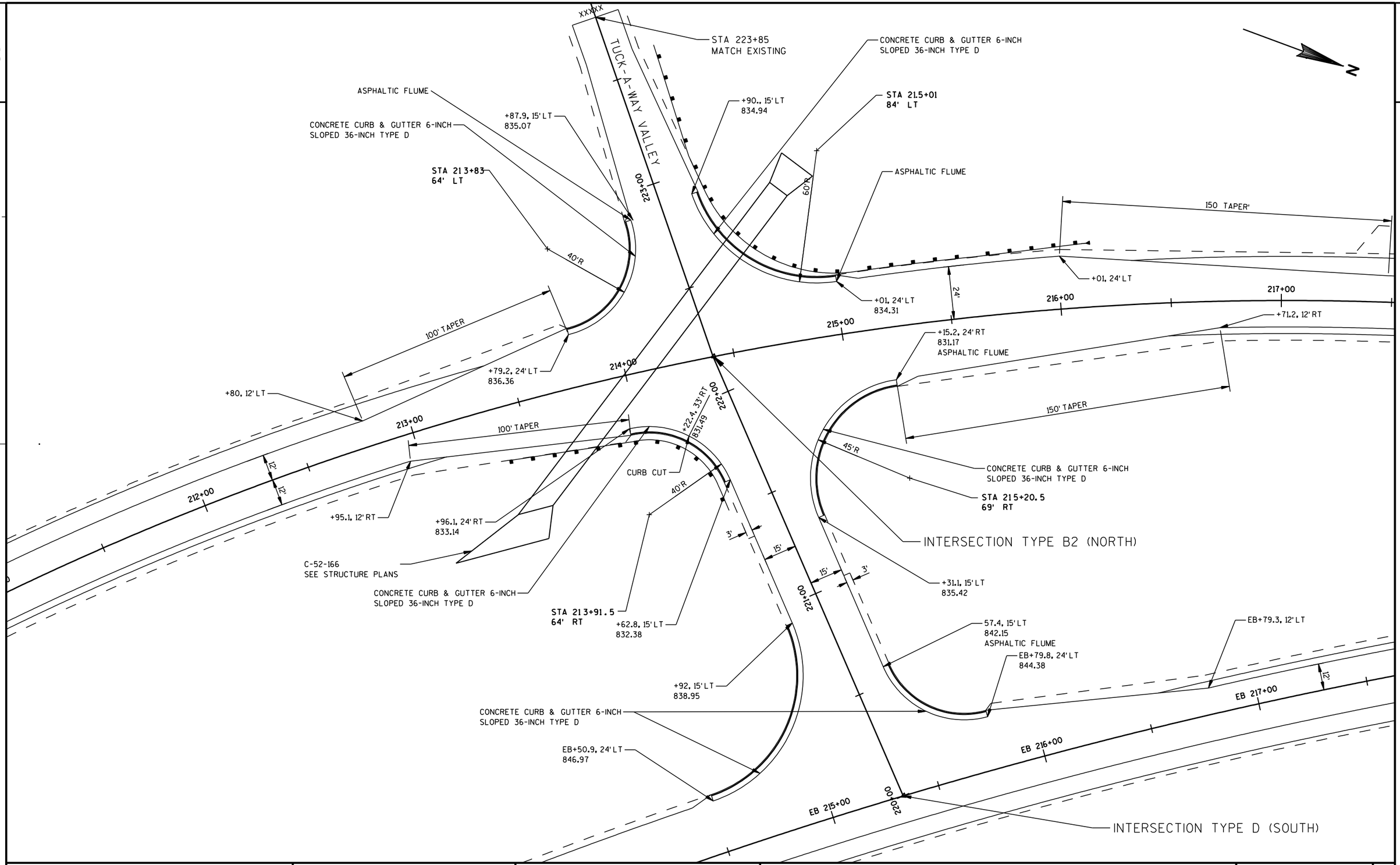

PROJECT NO: 1643-05-75	HWY: USH 14	COUNTY: RICHLAND	INTERSECTION DETAIL - TUCK-A-WAY VALLEY	SHEET 14	E

2

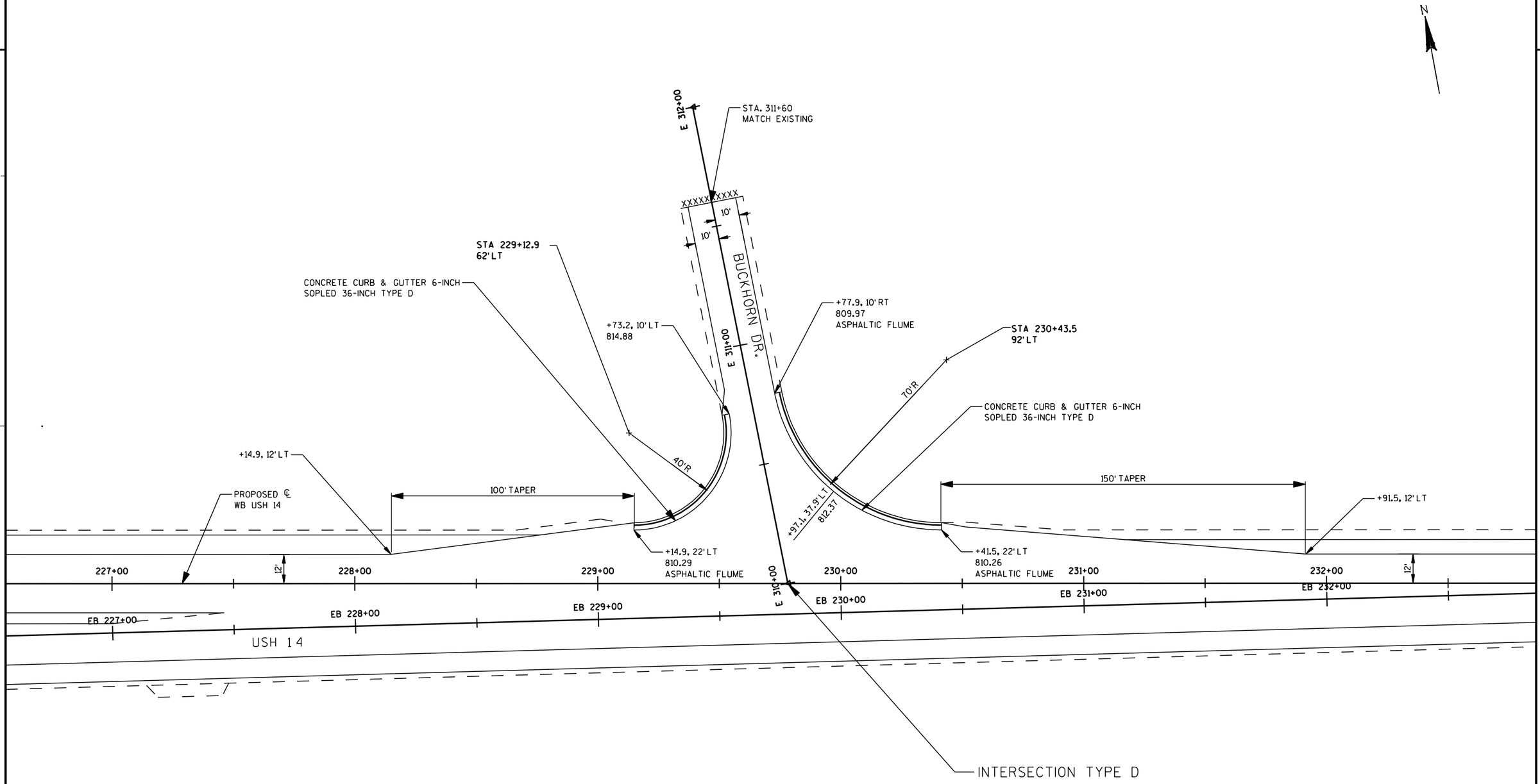

PROJECT NO: 1643-05-75	HWY: USH 14	COUNTY: RICHLAND	INTERSECTION DETAIL - BUCKHORN DR.	SHEET	E

FILE NAME : L:\Projects\11099\dwg\021106_id.dgn PLOT DATE : 11/01/12 PLOT BY : tmoyer PLOT NAME : PLOT SCALE : 1:40

2

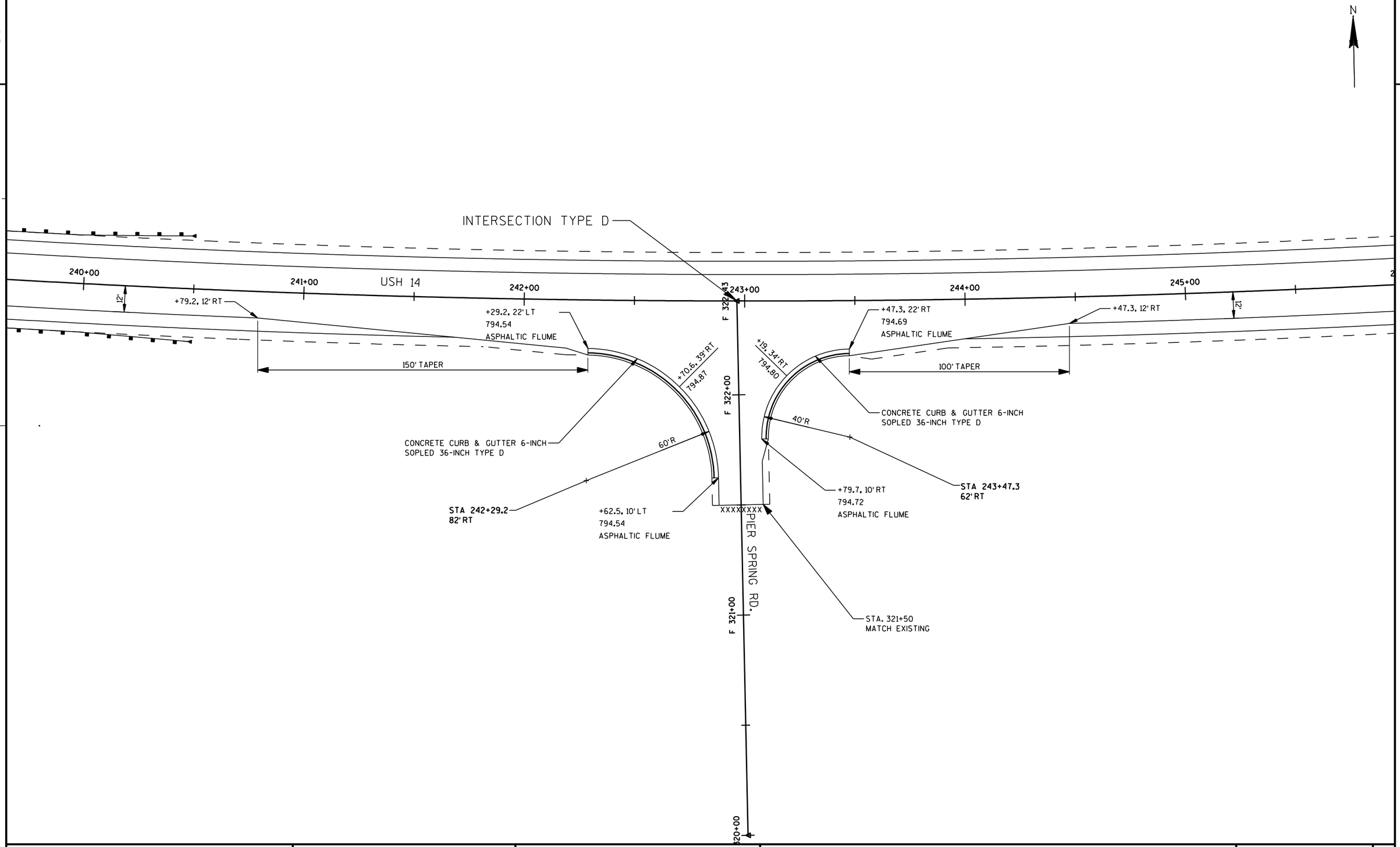

PROJECT NO: 1643-05-75	HWY: USH 14	COUNTY: RICHLAND	INTERSECTION DETAIL - PIER SPRING ROAD	SHEET 16	E

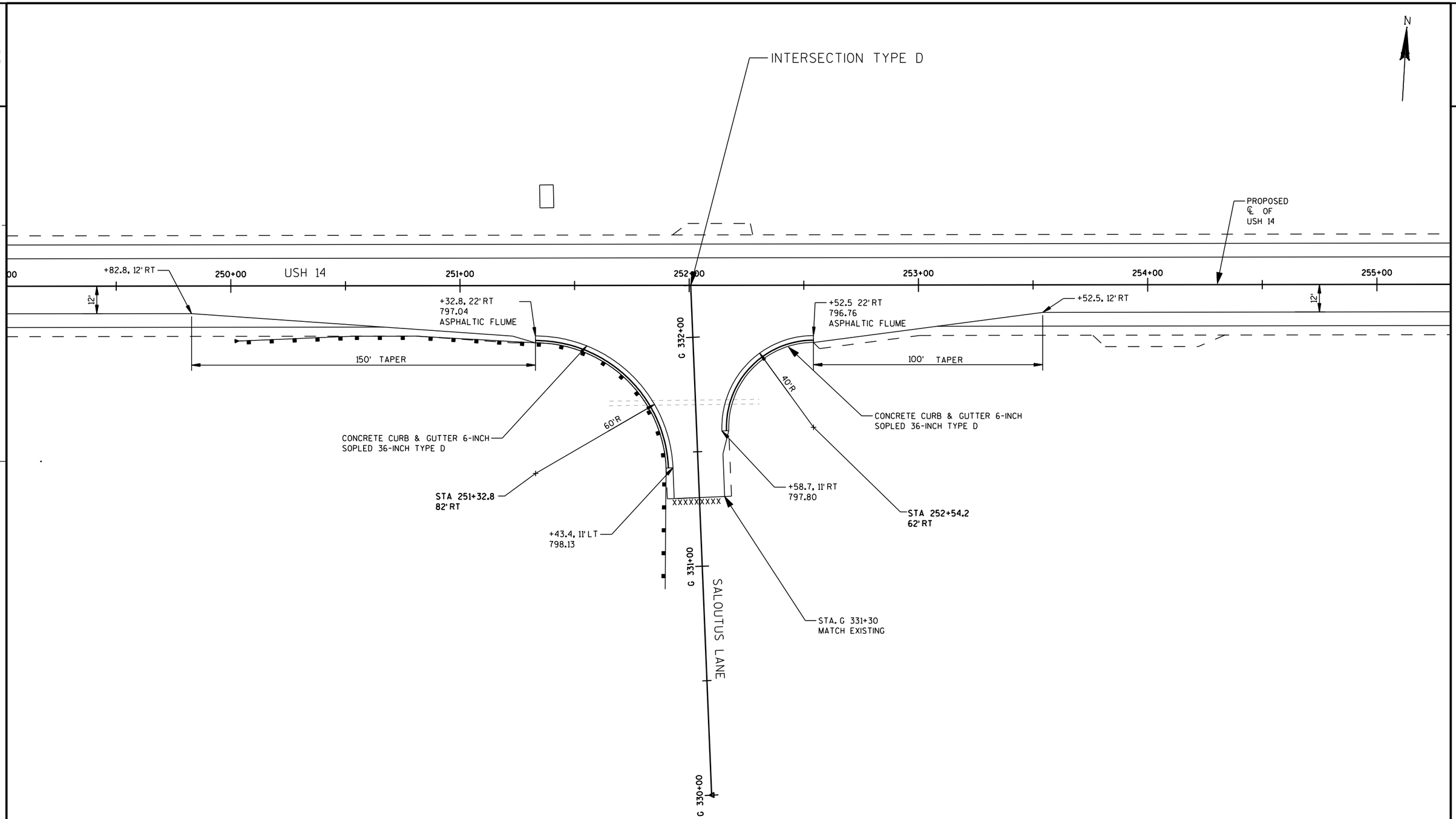

CP 1190

PROJECT NO: 1643-05-75	HWY: USH 14	COUNTY: RICHLAND	INTERSECTION DETAIL - SALOUTUS LANE	SHEET 17	E

2

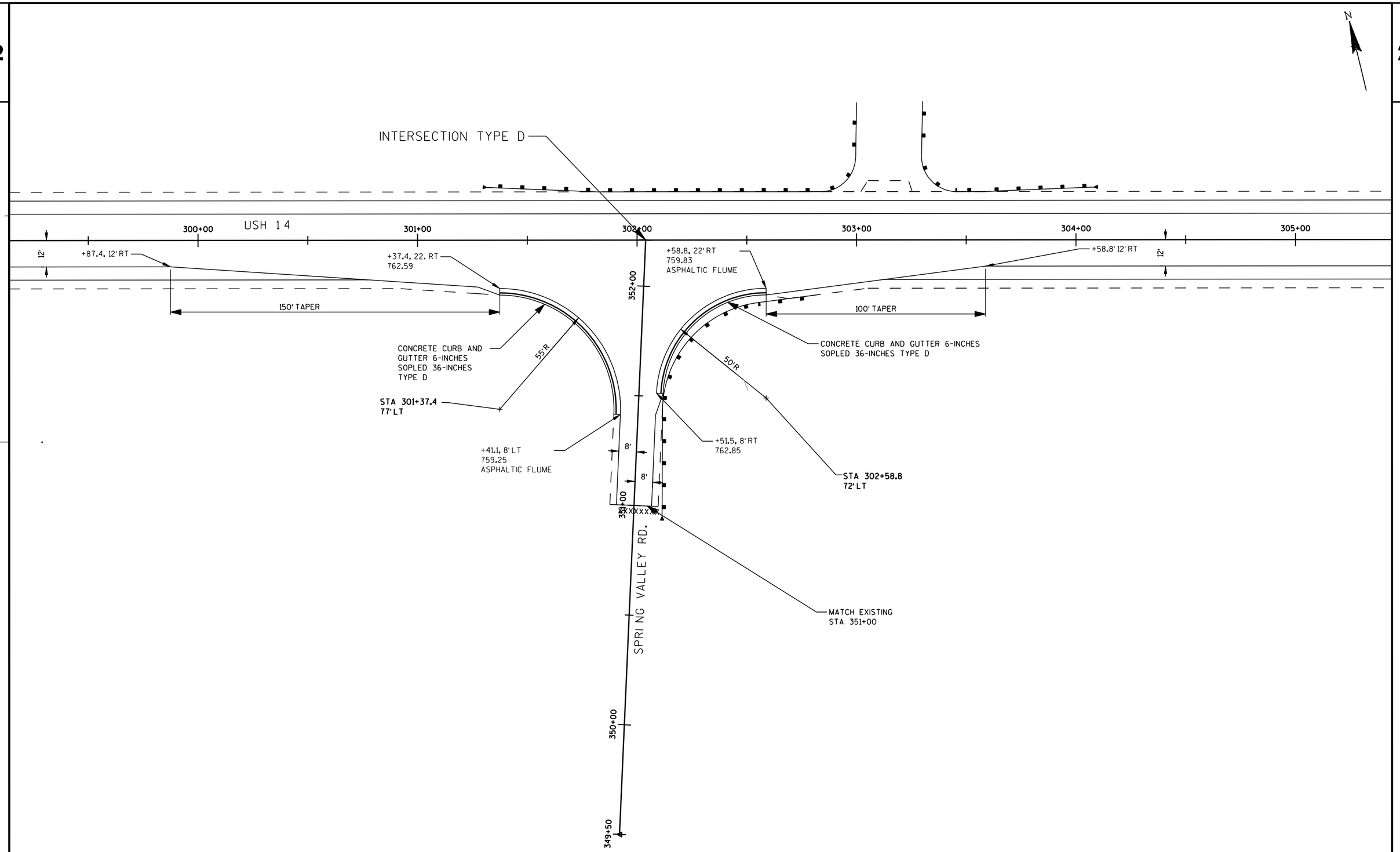

PROJECT NO: 1643-05-75	HWY: USH 14	COUNTY: RICHLAND	INTERSECTION DETAIL - SPRING VALLEY ROAD	SHEET 18	E

FILE NAME : L:\Projects\11099\dwg\021110_id.dgn PLOT DATE : 11/01/12 PLOT BY : tmoyer PLOT NAME : PLOT SCALE : 1:40.0002

2

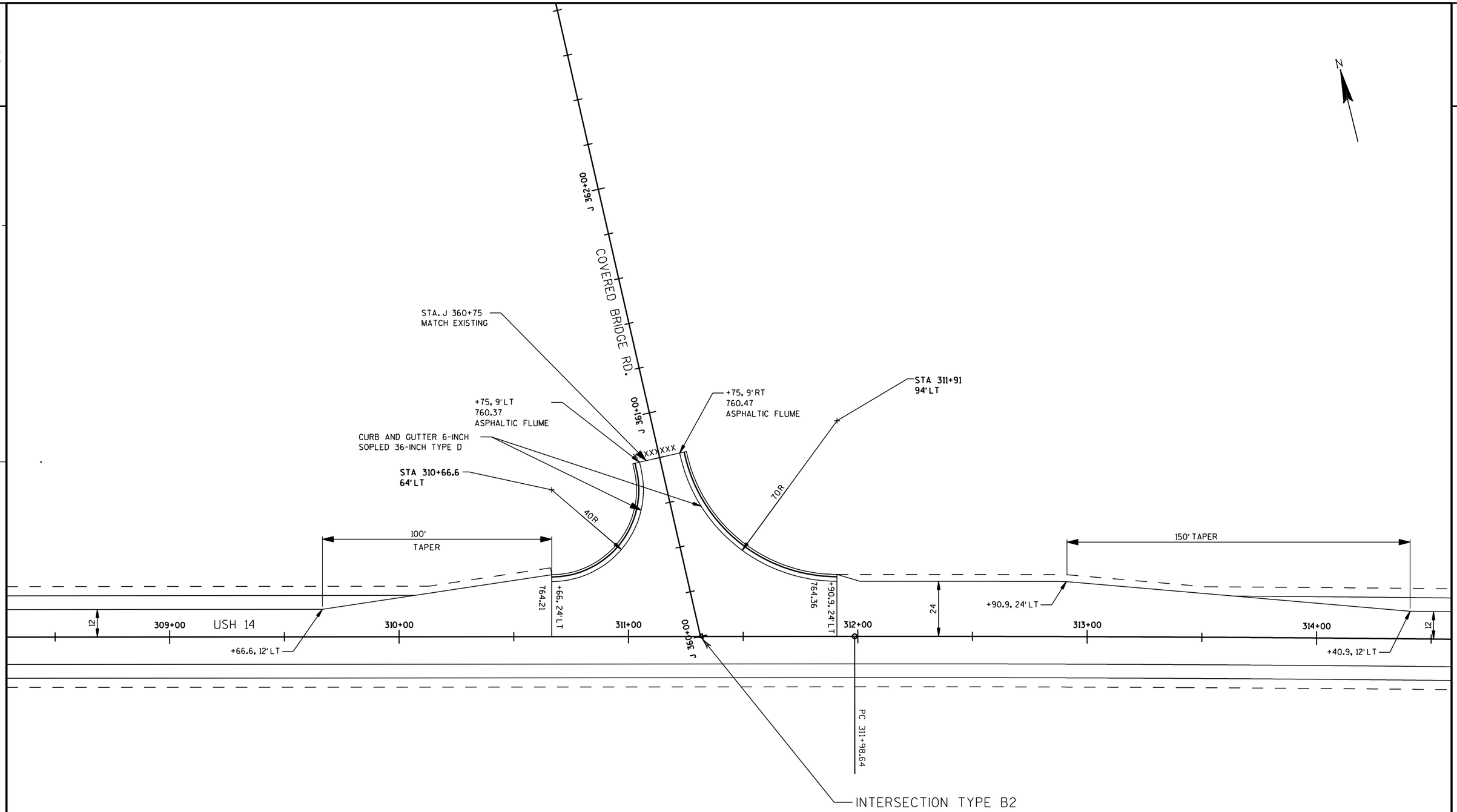

PROJECT NO: 1643-05-75	HWY: USH 14	COUNTY: RICHLAND	INTERSECTION DETAIL - COVERED BRIDGE RD	SHEET 19	E

FILE NAME : L:\Projects\11099\dwg\021111_id.dgn PLOT DATE : 11/01/12 PLOT BY : tmoyer PLOT NAME : PLOT SCALE : 1:40

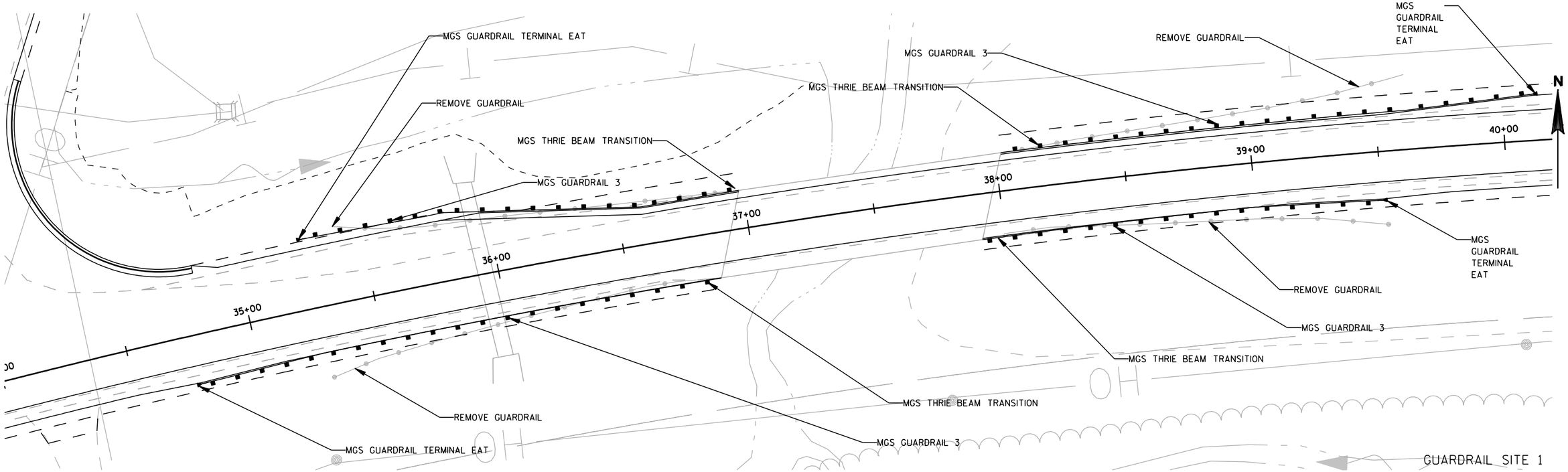

2

PROJECT NO: 1643-05-75	HWY: USH 14	COUNTY: RICHLAND	GUARDRAIL CONSTRUCTION DETAILS - SITE 1	SHEET 20	E

FILE NAME : L:\Projects\11099\dwg\021201_pd.dgn PLOT DATE : 07/20/12 PLOT BY : tmoyer PLOT NAME : PLOT SCALE : 1:40
WISDOT/CADDS SHEET 42

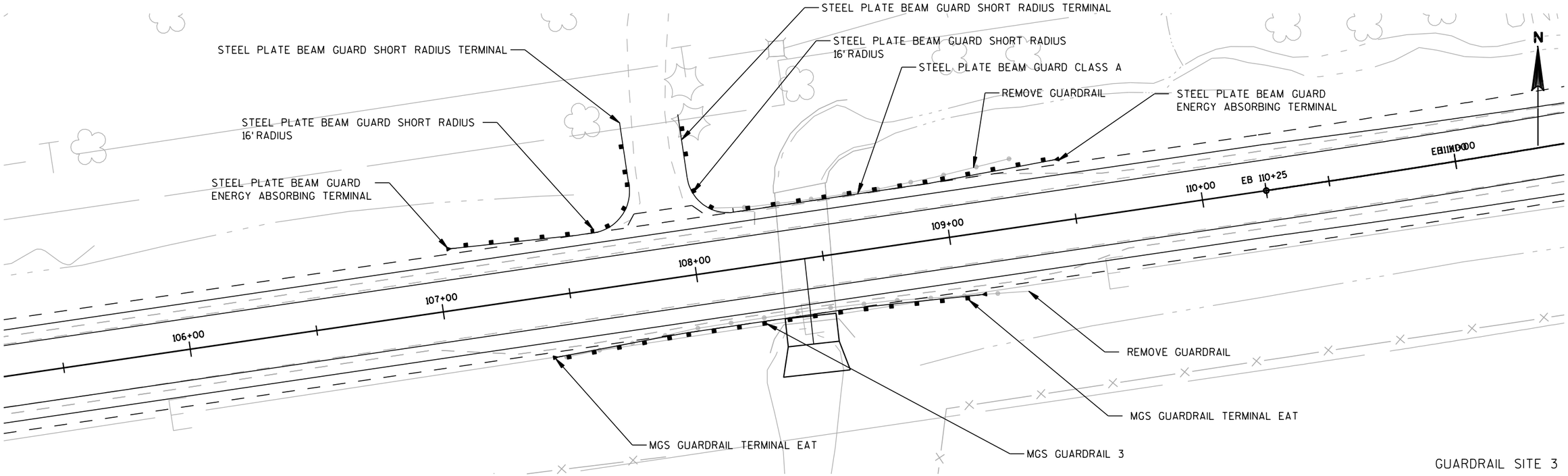

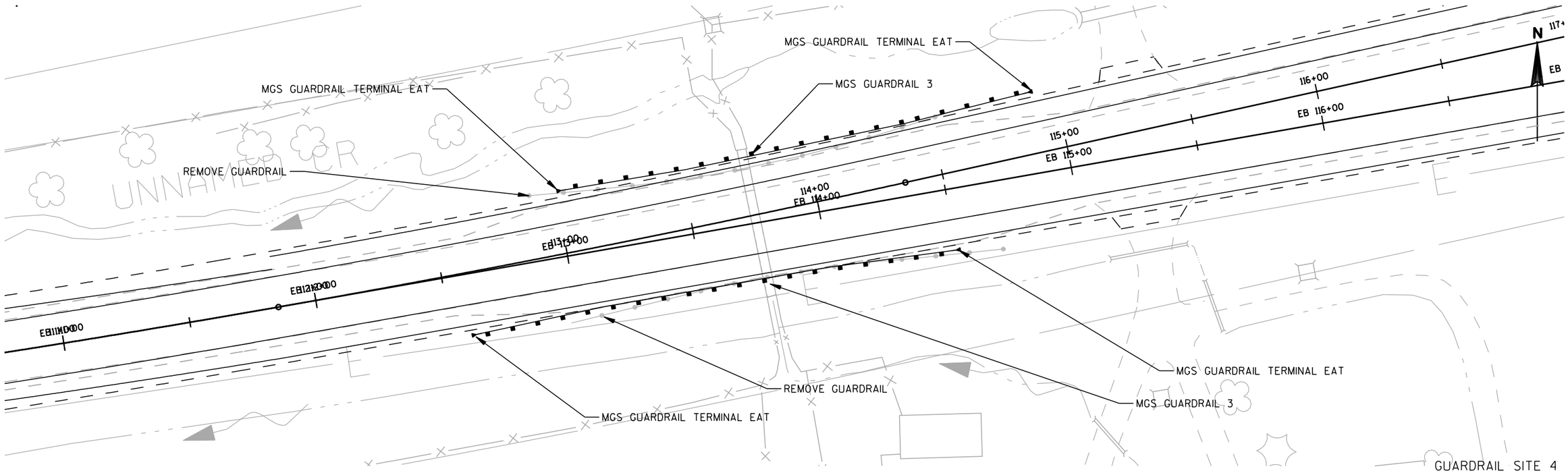

PROJECT NO: 1643-05-75	HWY: USH 14	COUNTY: RICHLAND	GUARDRAIL CONSTRUCTION DETAILS - SITES 3 & 4	SHEET 21	E

2

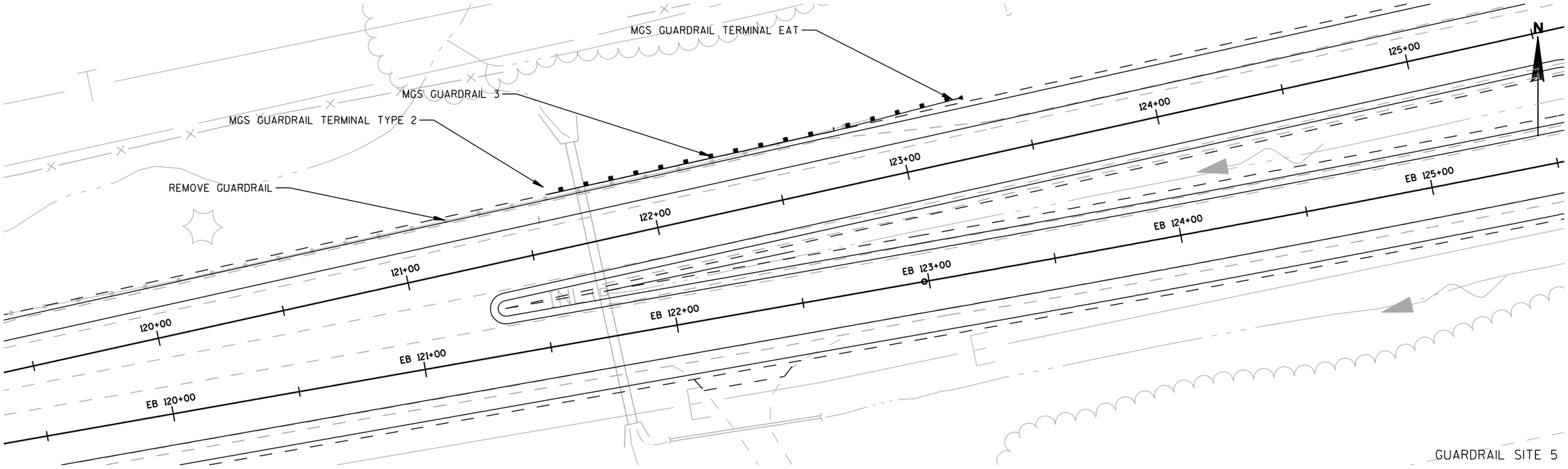

GUARDRAIL SITE 5

PROJECT NO: 1643-05-75	HWY: USH 14	COUNTY: RICHLAND	GUARDRAIL CONSTRUCTION DETAILS - SITE 5	SHEET 22	E

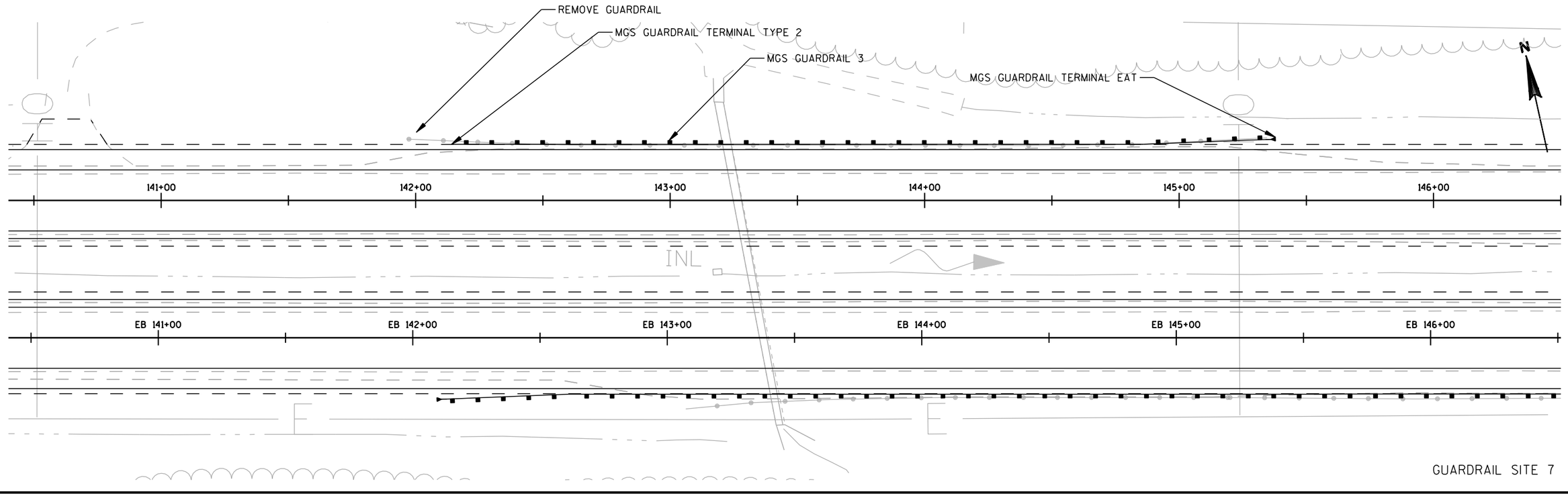

GUARDRAIL SITE 7

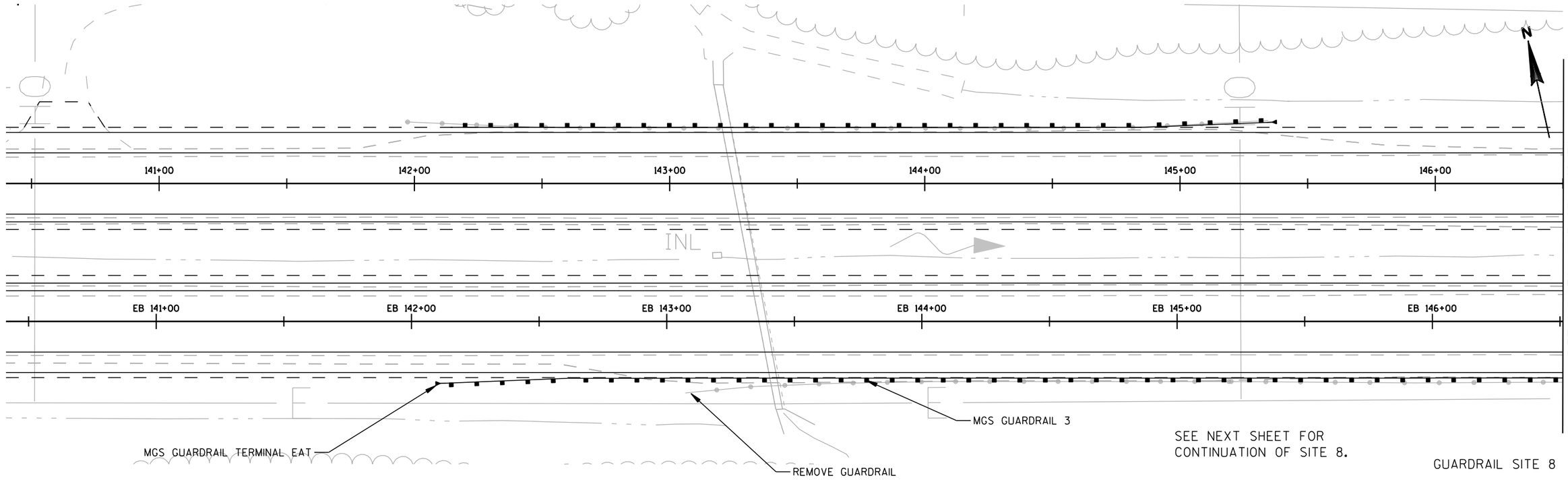

SEE NEXT SHEET FOR
CONTINUATION OF SITE 8.

GUARDRAIL SITE 8

PROJECT NO: 1643-05-75	HWY: USH 14	COUNTY: RICHLAND	GUARDRAIL CONSTRUCTION DETAILS - SITES 7 & 8	SHEET 23	E

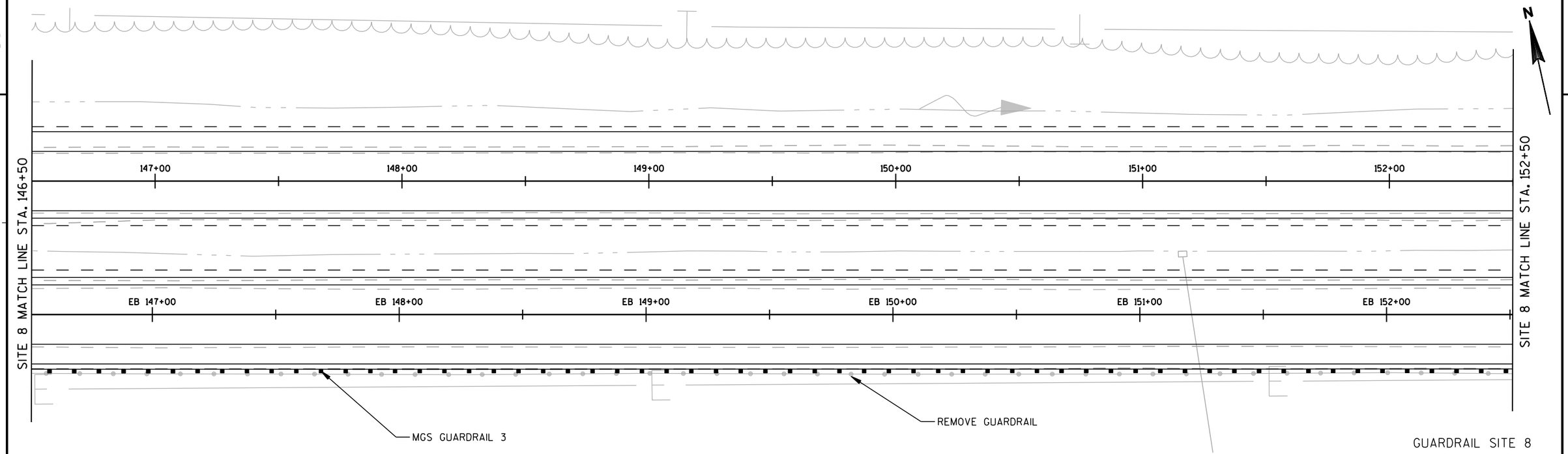

GUARDRAIL SITE 8

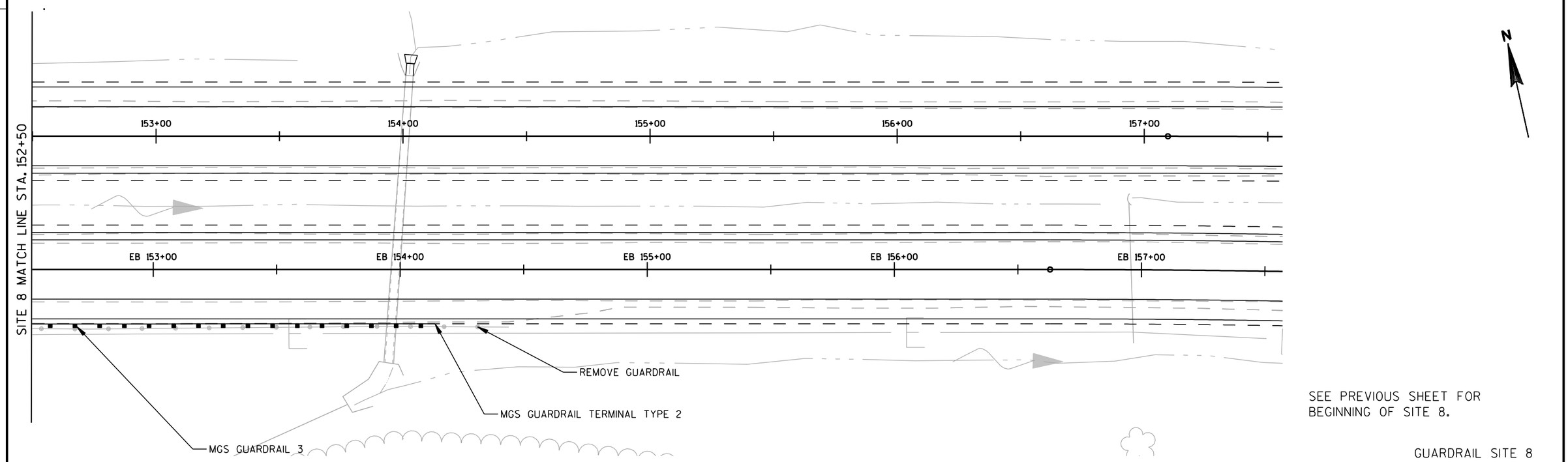

SEE PREVIOUS SHEET FOR
BEGINNING OF SITE 8.

GUARDRAIL SITE 8

PROJECT NO: 1643-05-75	HWY: USH 14	COUNTY: RICHLAND	GUARDRAIL CONSTRUCTION DETAILS - SITE 8 CONTINUED	SHEET 24	E

FILE NAME : L:\Projects\11099\dwg\021205_pd.dgn PLOT DATE : 07/10/12 PLOT BY : tmoyer PLOT NAME : PLOT SCALE : 1:40
WISDOT/CADDS SHEET 42

2

N

MGS GUARDRAIL TERMINAL EAT

REMOVE GUARDRAIL

MGS GUARDRAIL 3

MGS GUARDRAIL TERMINAL TYPE 2

EB 169+00

EB 170+00

EB 171+00

EB 172+00

EB 173+00

EB 174+00

GUARDRAIL SITE 9

PROJECT NO: 1643-05-75	HWY: USH 14	COUNTY: RICHLAND	GUARDRAIL CONSTRUCTION DETAILS - SITE 9	SHEET 25	E

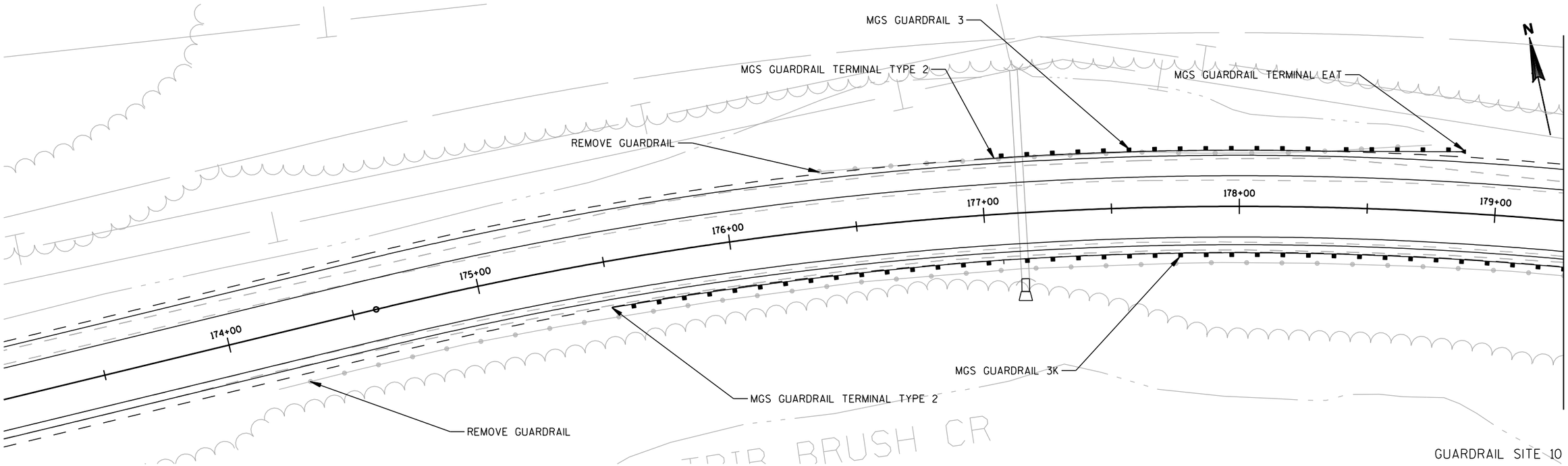

GUARDRAIL SITE 10

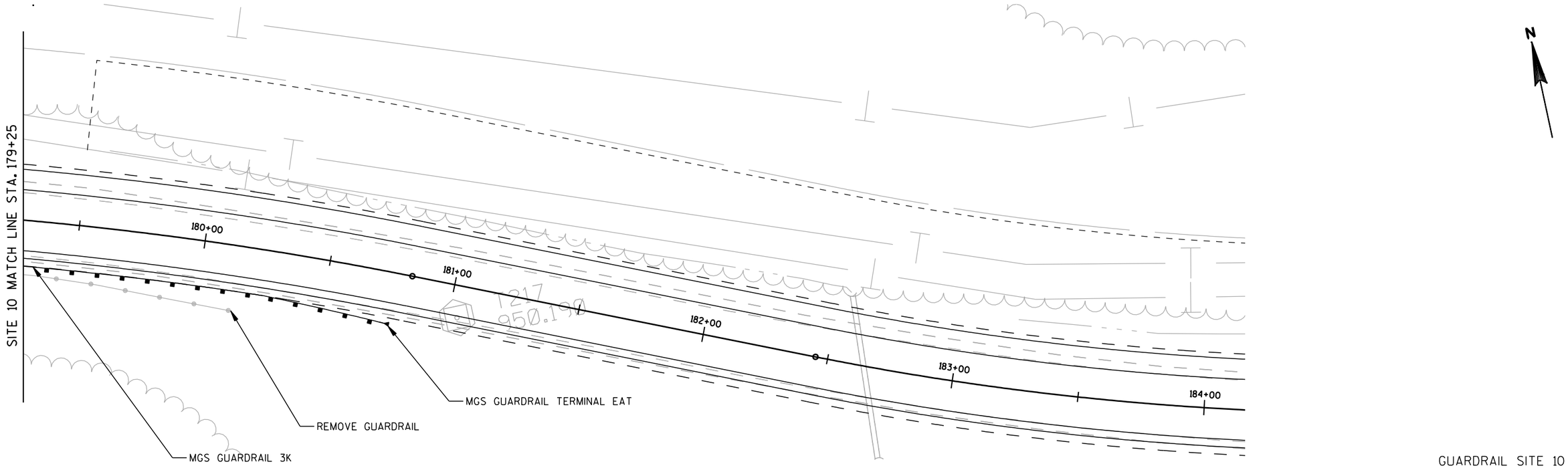

GUARDRAIL SITE 10

PROJECT NO: 1643-05-75	HWY: USH 14	COUNTY: RICHLAND	GUARDRAIL CONSTRUCTION DETAILS - SITE 10	SHEET 26	E

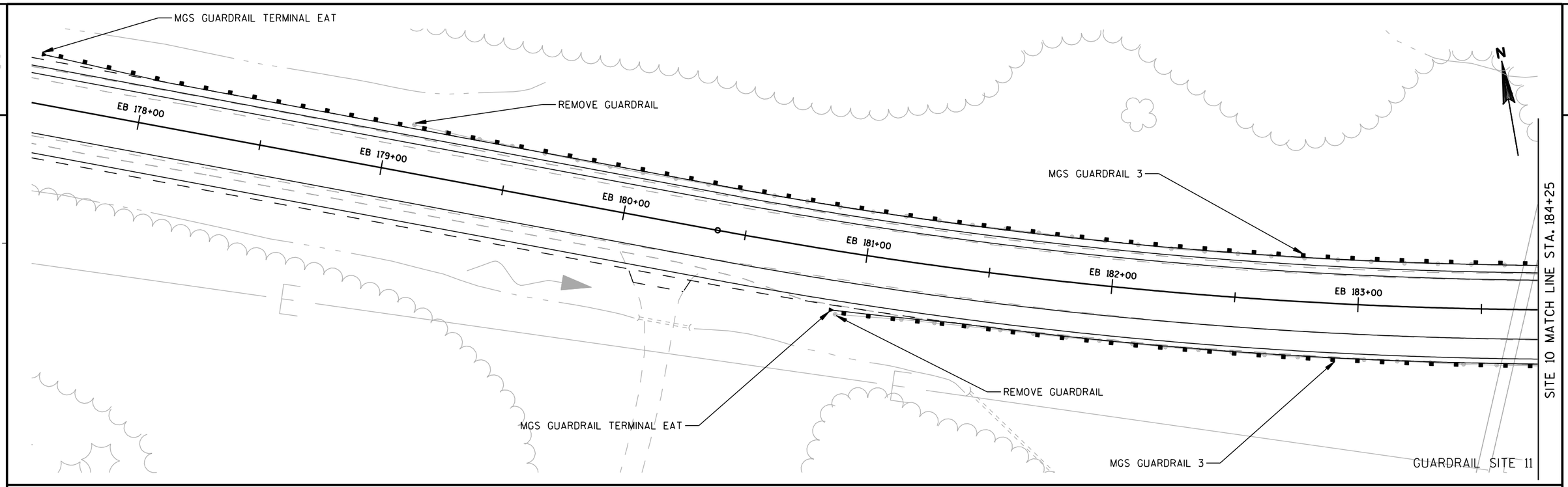

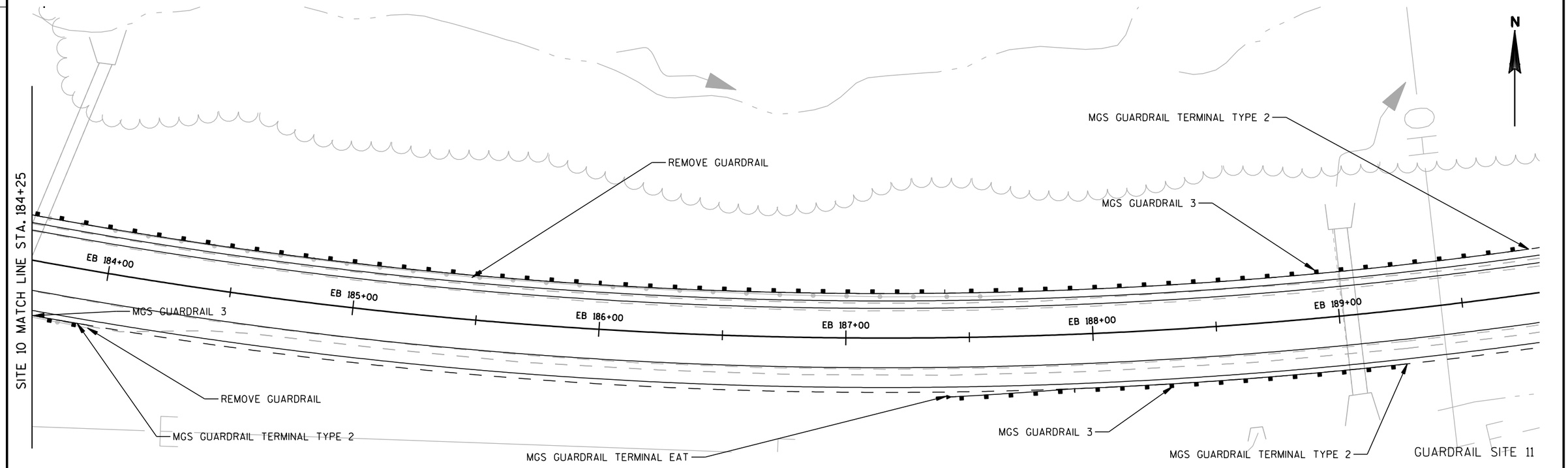

PROJECT NO: 1643-05-75	HWY: USH 14	COUNTY: RICHLAND	GUARDRAIL CONSTRUCTION DETAILS - SITE 11	SHEET 27	E

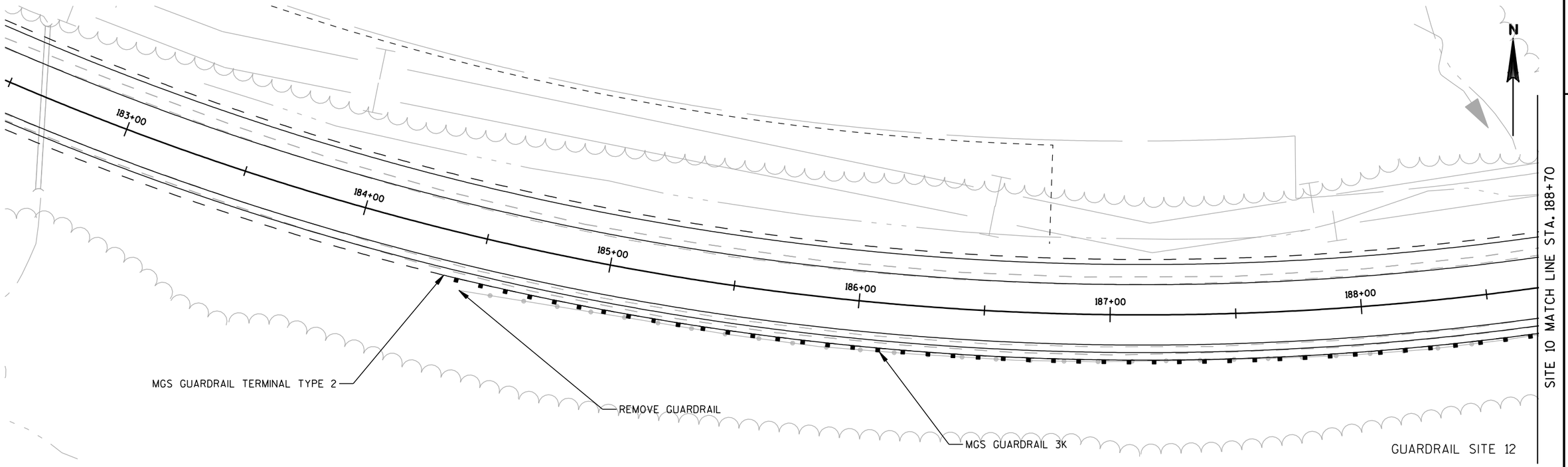

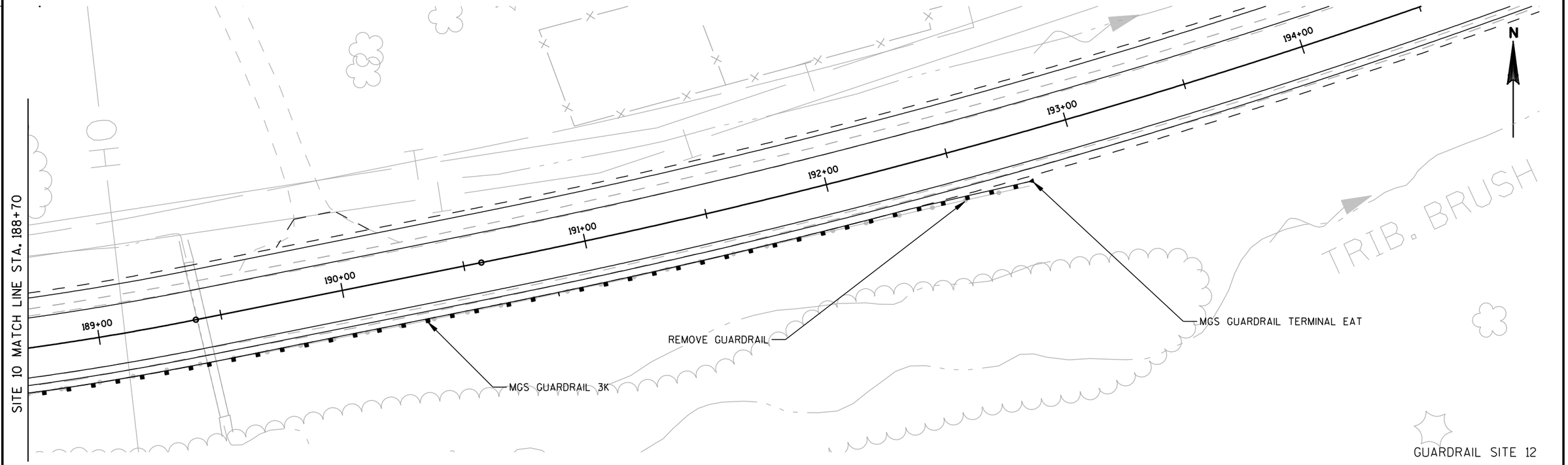

PROJECT NO: 1643-05-75	HWY: USH 14	COUNTY: RICHLAND	GUARDRAIL CONSTRUCTION DETAILS - SITE 12	SHEET 28	E

FILE NAME : L:\Projects\11099\dwg\021209_pd.dgn PLOT DATE : 07/20/12 PLOT BY : tmoyer PLOT NAME : PLOT SCALE : 1:40

WISDOT/CADDS SHEET 42

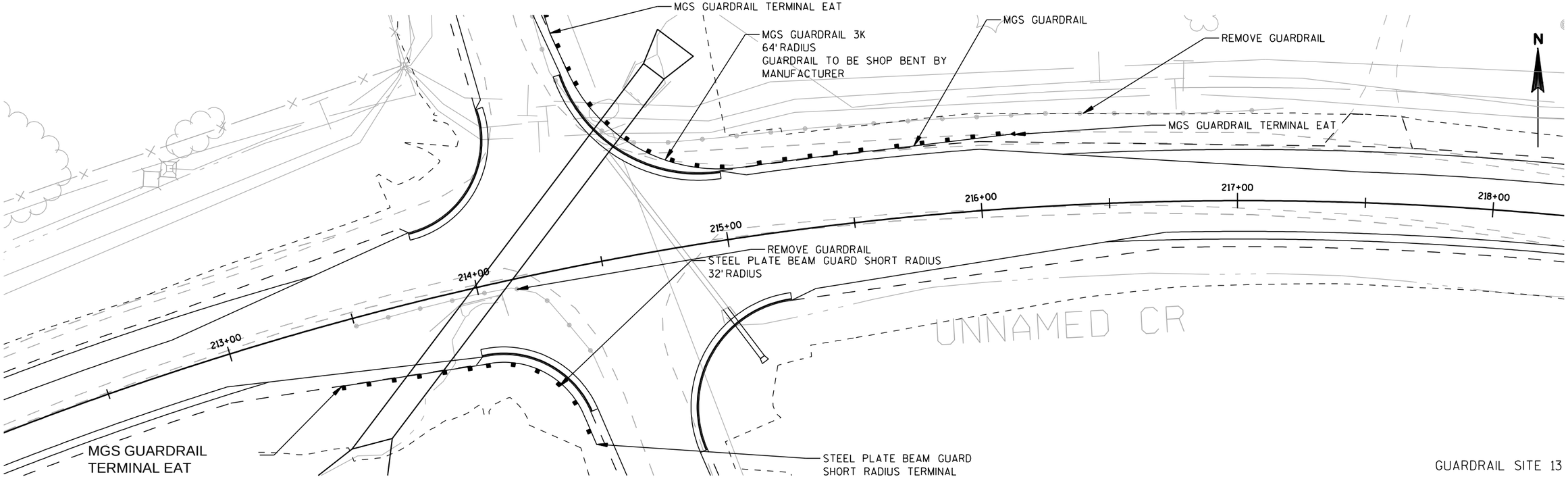

GUARDRAIL SITE 13

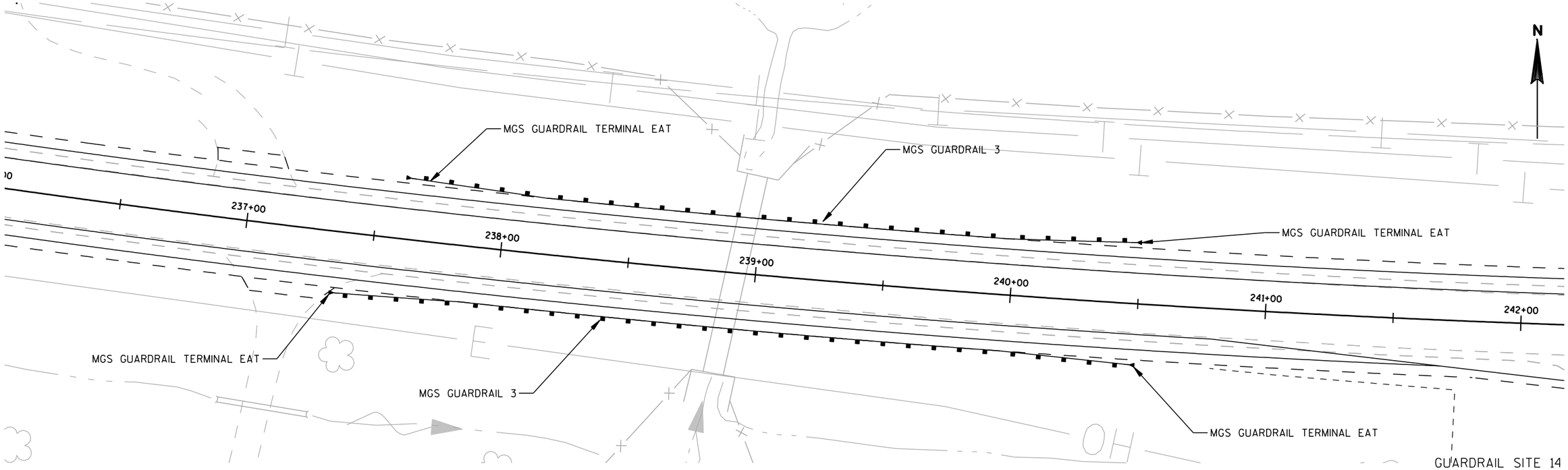

GUARDRAIL SITE 14

PROJECT NO: 1643-05-75	HWY: USH 14	COUNTY: RICHLAND	GUARDRAIL CONSTRUCTION DETAILS - SITES 13 & 14	SHEET 29	E

2

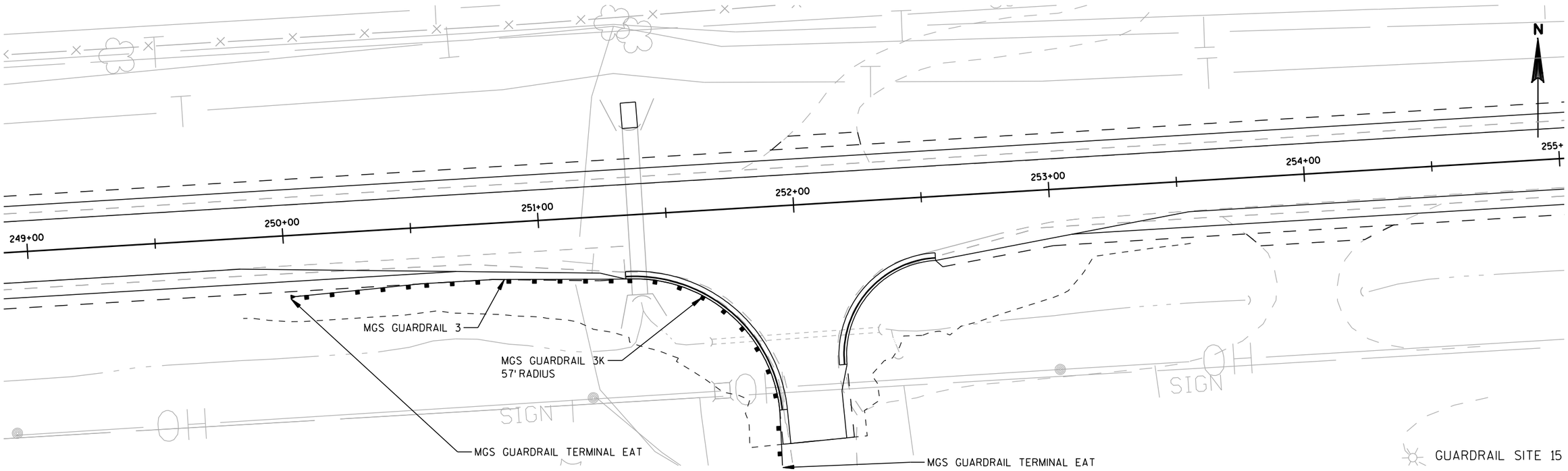

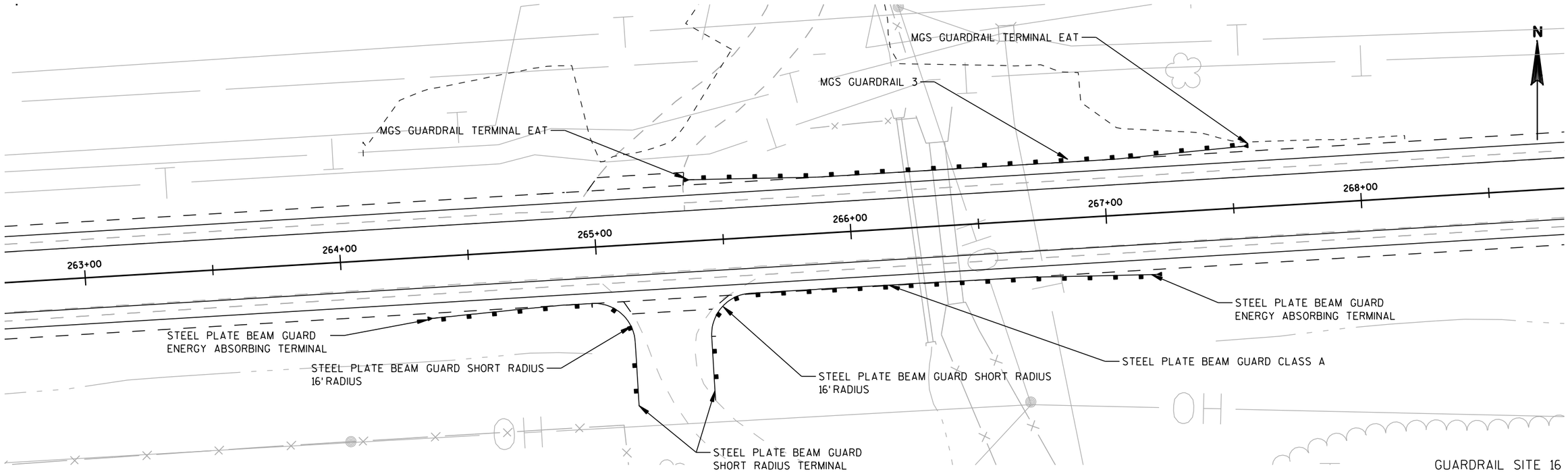

PROJECT NO: 1643-05-75	HWY: USH 14	COUNTY: RICHLAND	GUARDRAIL CONSTRUCTION DETAILS - SITES 15 & 16	SHEET 30	E

2

N

STEEL PLATE BEAM GUARD CLASS A

STEEL PLATE BEAM GUARD
SHORT RADIUS
16' RADIUS

STEEL PLATE BEAM GUARD
ENERGY ABSORBING TERMINAL

STEEL PLATE BEAM GUARD SHORT RADIUS TERMINAL

STEEL PLATE BEAM GUARD SHORT RADIUS TERMINAL

STEEL PLATE BEAM GUARD
SHORT RADIUS
16' RADIUS

STEEL PLATE BEAM GUARD CLASS A

STEEL PLATE BEAM GUARD
ENERGY ABSORBING TERMINAL

301+00

302+00

303+00

304+00

305+00

306

MGS GUARDRAIL TERMINAL EAT

MGS GUARDRAIL 3K
50' RADIUS

MGS GUARDRAIL TERMINAL EAT

GUARDRAIL SITE 17

PROJECT NO: 1643-05-75	HWY: USH 14	COUNTY: RICHLAND	GUARDRAIL CONSTRUCTION DETAILS - SITE 17	SHEET 31	E

2

1-1
REMOVE

1-2
STOP
REMOVE
STOP
R1-1
30" X 30"

1-3
JCT
COUNTY
Z
J1-1
24" X 39"
JCT
COUNTY
Z
REMOVE

1-4
WEST
14
J4-1
24" x 36"

1-5
COUNTY
Z
REMOVE
COUNTY
Z
J13-1
24" X 45"

1-6
STOP
REMOVE
STOP
R1-1
30" X 30"

1-7
14
REMOVE
14
J13-1
24" X 45"

1-8
COUNTY
Z
REMOVE
COUNTY
Z
J13-1
24" X 45"

1-9
W5-52R
12" X 36"
REMOVE

1-10
W5-52L
12" X 36"
REMOVE

1-11
W5-52R
12" X 36"
REMOVE

1-12
W5-52L
12" X 36"
REMOVE

1-13
Purple Heart
Memorial Marker
1/2 MILE
D5-63
78" X 36"

1-14
JCT
COUNTY
Z
J1-1
24" X 39"
JCT
COUNTY
Z
REMOVE

1-15
W1-7
48" X 24"

1-16
EAST
14
J4-1
24" x 36"

HISTORICAL
MARKER
1/2 MILE
REMOVE

N

16+94
20+00
25+00
30+00
35+00
40+00
45+00

E BRANCH MILL CR
TRIB. E BRANCH MILL CR
FOOTBRIDGE
WALLS
OH

BEGIN PROJECT 1634-05-05
STA. 19+50

EXISTING SIGN ON WOOD POST(S)

PROPOSED SIGN ON WOOD POST(S)

STOP PROPOSED SIGN

STOP EXISTING SIGN TO REMAIN OR
EXISTING SIGN TO BE REMOVED

(X) DESIGNATES SIGN ITEM NUMBER

PROJECT NO: 1643-05-75	HWY: USH 14	COUNTY: RICHLAND	PERMANENT SIGNING	SHEET 32	E

2

N

50+00

55+00

60+00

65+00

70+00

75+00

2-1

NO PASSING ZONE
REMOVE

NO PASSING ZONE
W14-3
48" X 36"

EXACT LOCATION OF NO PASSING ZONE SIGN TO BE DETERMIMED AFTER NO PASSING ZONES ARE LOCATED

2-2

HISTORICAL MARKER
D5-64L
60" X 36"

HISTORICAL MARKER
REMOVE

2-3

HISTORICAL MARKER
REMOVE

HISTORICAL MARKER
D5-64R
60" X 36"

2-4

STOP
R1-1
30" X 30"

2-5

STOP
R1-1
30" X 30"

OH

SEPTIC

RUINS

SIGN

TANKS

UNNAMED CR

EXISTING SIGN ON WOOD POST(S)

PROPOSED SIGN ON WOOD POST(S)

STOP PROPOSED SIGN

STOP EXISTING SIGN TO REMAIN OR EXISTING SIGN TO BE REMOVED

(X) DESIGNATES SIGN ITEM NUMBER

V130
0806-23

PROJECT NO: 1643-05-75	HWY: USH 14	COUNTY: RICHLAND	PERMANENT SIGNING	SHEET 33	E

FILE NAME : L:\Projects\11099\dwg\023202_ps.dgn PLOT DATE : 07/10/12 PLOT BY : tmoyer PLOT NAME : PLOT SCALE : 1:200

2

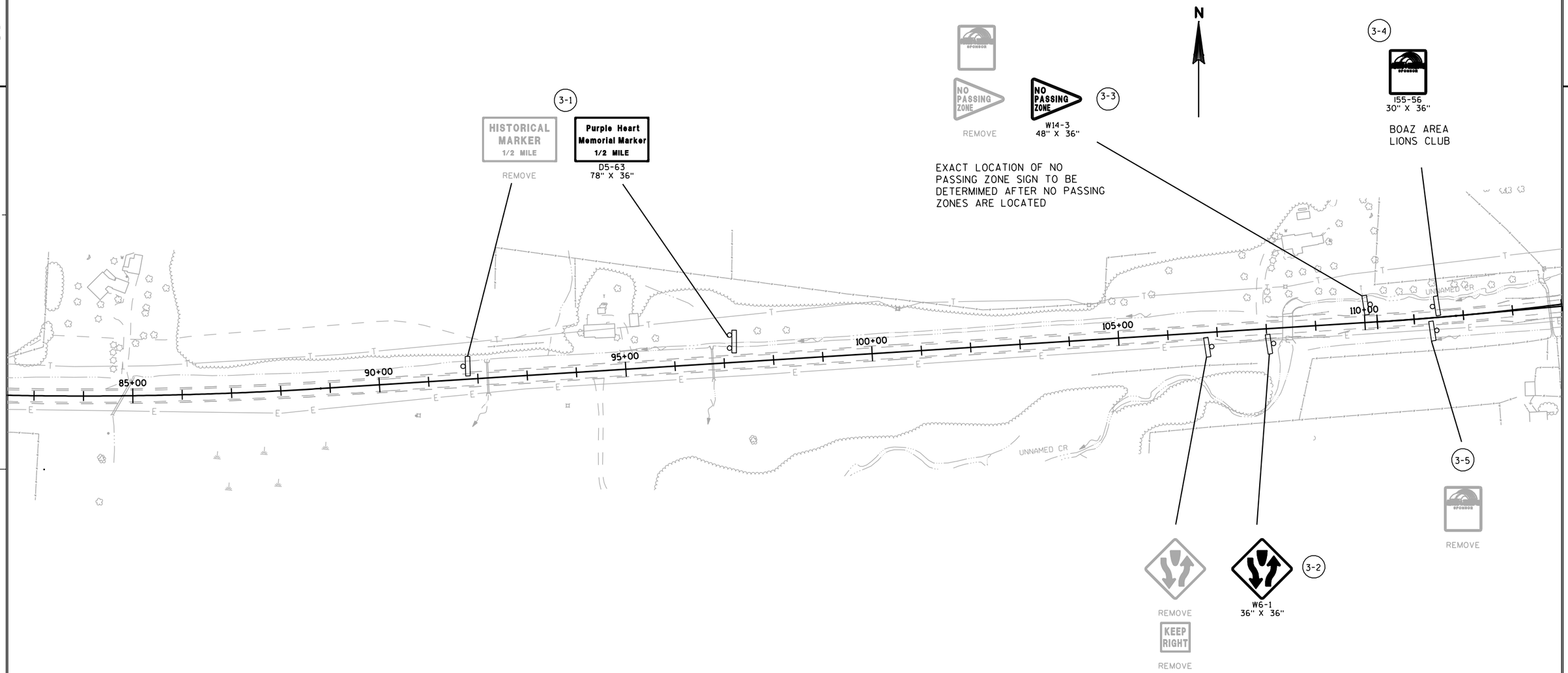

EXISTING SIGN ON WOOD POST(S)

PROPOSED SIGN ON WOOD POST(S)

STOP PROPOSED SIGN

STOP EXISTING SIGN TO REMAIN OR EXISTING SIGN TO BE REMOVED

(X) DESIGNATES SIGN ITEM NUMBER

PROJECT NO: 1643-05-75	HWY: USH 14	COUNTY: RICHLAND	PERMANENT SIGNING	SHEET 34	E

2

N

4-2
REMOVE

4-6
SIGN PROVIDED BY OTHERS
Eden Valley Ln
Eden Valley Ln

4-5
STOP
REMOVE
STOP
R1-1
30" X 30"

4-4
ONE WAY
REMOVE

4-9
DO NOT ENTER
R5-1
36" X 36"
DO NOT ENTER
REMOVE

4-10
REMOVE

4-1
DO NOT ENTER
REMOVE
DO NOT ENTER
R5-1
36" X 36"

4-17
WRONG WAY
R5-1A
42" X 30"
W6-2
36" X 36"

4-12
REMOVE
W4-2L
36" X 36"

4-14
LEFT LANE ENDS
W9-1L
36" X 36"

4-2
W6-3
36" X 36"

4-15
WRONG WAY
R5-1A
42" X 30"

EDEN VALLEY LANE

145+00
EB 145+00
140+00
EB 140+00
135+00
EB 135+00
130+00
EB 130+00
125+00
EB 125+00
120+00
EB 120+00
115+00
EB 115+00

4-13
LEFT LANE ENDS
W9-1L
36" X 36"

4-16
W6-2
36" X 36"

4-8
REMOVE

4-11
REMOVE
W4-2L
36" X 36"

4-3
REMOVE
R4-7
36" X 48"

4-7
ONE WAY
REMOVE
ONE WAY
R6-2L
24" X 30"

EXISTING SIGN ON WOOD POST(S)
PROPOSED SIGN ON WOOD POST(S)
STOP PROPOSED SIGN
STOP EXISTING SIGN TO REMAIN OR EXISTING SIGN TO BE REMOVED
(X) DESIGNATES SIGN ITEM NUMBER

PROJECT NO: 1643-05-75	HWY: USH 14	COUNTY: RICHLAND	PERMANENT SIGNING	SHEET 35	E

FILE NAME : L:\Projects\11099\dwg\023204_ps.dgn PLOT DATE : 11/01/12 PLOT BY : tmoyer PLOT NAME : PLOT SCALE : 1:200

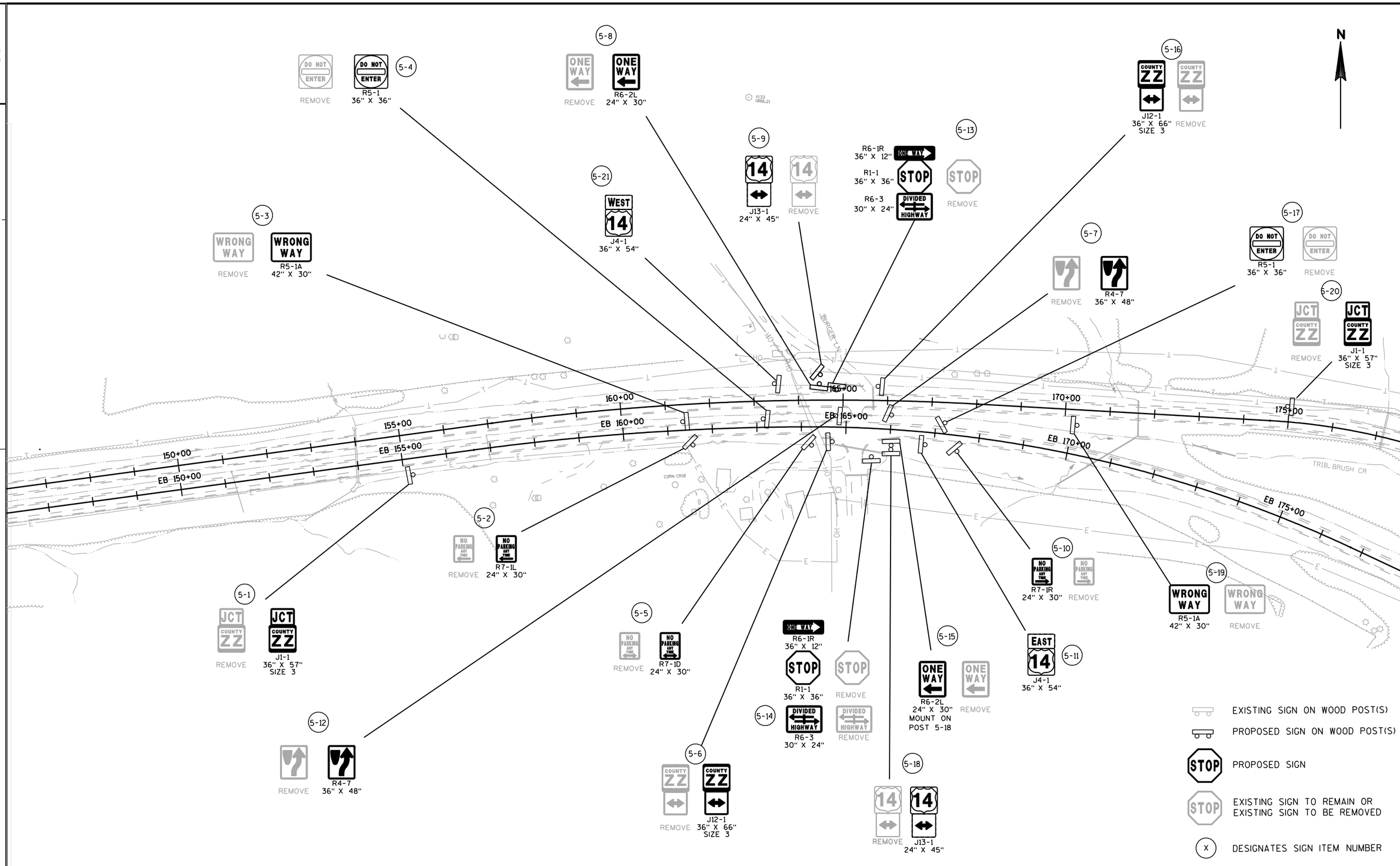

PROJECT NO: 1643-05-75	HWY: USH 14	COUNTY: RICHLAND	PERMANENT SIGNING	SHEET 36	E

FILE NAME : L:\Projects\11099\dwg\023205_ps.dgn PLOT DATE : 07/10/12 PLOT BY : tmoyer PLOT NAME : PLOT SCALE : 1:200

WISDOT/CADDS SHEET 42

2

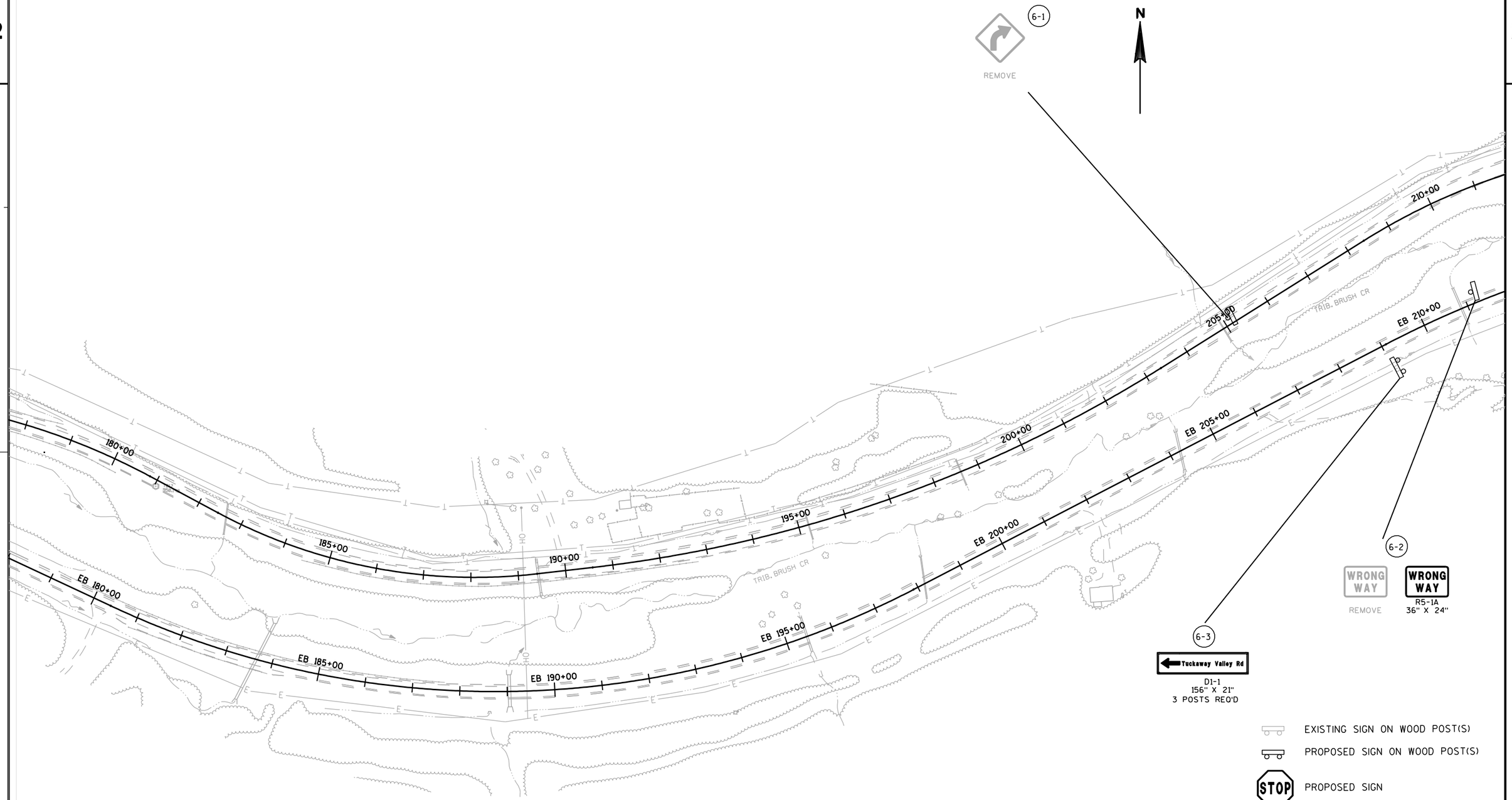

PROJECT NO: 1643-05-75	HWY: USH 14	COUNTY: RICHLAND	PERMANENT SIGNING	SHEET 37	E

2

EXISTING SIGN ON WOOD POST(S)

PROPOSED SIGN ON WOOD POST(S)

PROPOSED SIGN

EXISTING SIGN TO REMAIN OR EXISTING SIGN TO BE REMOVED

(X) DESIGNATES SIGN ITEM NUMBER

N

7-4 ONE WAY R6-2L 24" X 30"

7-5 ONE WAY R6-1R 36" X 12" / STOP R1-1 36" X 36"

7-6 STOP R1-1 36" X 36"

7-11 ONE WAY R6-1L 36" X 12" / STOP R1-1 36" X 36"

7-23 Tuckaway Valley Rd D1-1 156" X 21" 3 POSTS REQ'D

7-3 REMOVE

7-14 REMOVE

7-30 ONE WAY R6-2R 24" X 30"

7-8 W4-2L 36" X 36"

7-10 WRONG WAY R5-1A 36" X 24"

7-15 R4-7 36" X 48" / W5-54S 18" X 18"

7-18 BUCKHORN LA BUCKHORN LA REMOVAL AND REPLACEMENT BY OTHERS

7-19 STOP R1-1 30" X 30"

7-21 Buckhorn Ln D1-1 84" X 15"

7-22 W6-1 36" X 36" / KEEP RIGHT

BUCKHORN LA.

215+00 220+00 225+00 230+00 235+00 240+00

EB 215+00 EB 220+00 EB 225+00 EB 230+00 EB 235+00

UNNAMED CR

BRUSH CR

PIER SPRING RD.

7-29 LEFT LANE ENDS W9-1L 36" X 36"

7-28

7-27 REMOVE

7-2 ONE WAY R6-1L 36" X 12" / STOP R1-1 36" X 36"

7-1 ONE WAY R6-2L 24" X 30"

7-13 Buckhorn Ln D1-1 84" X 15"

7-12 W6-2 36" X 36" / WRONG WAY R5-1A 36" X 24"

7-17 DO NOT ENTER R5-1 30" X 30"

7-16 W6-3 36" X 36"

7-7 W4-2L 36" X 36"

7-9 DO NOT ENTER R5-1 36" X 36"

7-20 NO PASSING ZONE W14-3 48" X 36"

EXACT LOCATION OF NO PASSING ZONE SIGN TO BE DETERMIMED AFTER NO PASSING ZONES ARE LOCATED

7-24 Pier Spring Dr D1-1 96" X 15"

7-25 STOP R1-1 30" X 30"

7-26 PIER SPRING RD PIER SPRING RD REMOVAL AND REPLACEMENT BY OTHERS

PROJECT NO: 1643-05-75	HWY: USH 14	COUNTY: RICHLAND	PERMANENT SIGNING	SHEET 38	E

2

N

8-2

SPONSOR

REMOVE

8-3

Pier Spring Dr

D1-1 96" X 15"

Pier Spring Dr

REMOVE

8-8

STOP

REMOVE

STOP

R1-1
30" X 30"

8-9

VIVIANS LANE VIVIANS LANE

REMOVAL AND REPLACEMENT OF SIGNS BY OTHERS

8-7

NO PASSING ZONE

REMOVE

NO PASSING ZONE

W14-3
48" X 36"

EXACT LOCATION OF NO PASSING ZONE SIGN TO BE DETERMIMED AFTER NO PASSING ZONES ARE LOCATED

VIVIANS LN

250+00

255+00

260+00

265+00

270+00

275+00

8-4

NO PARKING ANY TIME

NO PARKING ANY TIME

REMOVAL AND REPLACEMENT OF SIGNS BY OTHERS

SALOUTUS LANE

8-6

SALOUTUS LANE SALOUTUS LANE

REMOVAL AND REPLACEMENT OF SIGNS BY OTHERS

8-5

STOP

R1-1
30" X 30"

STOP

REMOVE

8-1

MORNINGSTAR FOODS EMPLOYEES

155-56
30" X 36"

ADOPT A-HIGHWAY LITTER CONTROL NEXT 2 MILES

REMOVE

EXISTING SIGN ON WOOD POST(S)

PROPOSED SIGN ON WOOD POST(S)

STOP PROPOSED SIGN

STOP EXISTING SIGN TO REMAIN OR EXISTING SIGN TO BE REMOVED

(X) DESIGNATES SIGN ITEM NUMBER

PROJECT NO: 1643-05-75	HWY: USH 14	COUNTY: RICHLAND	PERMANENT SIGNING	SHEET 39	E

2

N

9-10

Spring Valley Rd
D1-1
108" X 15"

Spring Valley Rd
REMOVE

9-7

STOP
REMOVE

STOP
R1-1
30" X 30"

9-6

COVERED BRIDGE DR
REMOVAL AND REPLACEMENT
BY OTHERS

COVERED BRIDGE DR

290+00

295+00

300+00

305+00

310+00

315+00

320+00

Covered Bridge Dr.

TRIB. BRUSH R.

SPRING VALLEY RD

9-9

Spring Valley Rd
D1-1
108" X 15"

Spring Valley Rd
REMOVE

9-1

NO PASSING ZONE
REMOVE

NO PASSING ZONE
W14-3
48" X 36"

EXACT LOCATION OF NO PASSING ZONE SIGN TO BE DETERMIMED AFTER NO PASSING ZONES ARE LOCATED

9-2

ALANA SPRINGS CAMPGROUND
1.8
TO REMAIN

9-3

Spring Valley Rd
REMOVAL AND REPLACEMENT
BY OTHERS

Spring Valley Rd

9-4

STOP
REMOVE

STOP
R1-1
30" X 30"

9-5

Covered Bridge Dr
D1-1
114" X 15"

Covered Bridge Dr
REMOVE

Covered Bridge Dr
D1-1
114" X 15"

9-8

Covered Bridge Dr
REMOVE

EXISTING SIGN ON WOOD POST(S)

PROPOSED SIGN ON WOOD POST(S)

STOP PROPOSED SIGN

STOP EXISTING SIGN TO REMAIN OR EXISTING SIGN TO BE REMOVED

(X) DESIGNATES SIGN ITEM NUMBER

PROJECT NO: 1643-05-75	HWY: USH 14	COUNTY: RICHLAND	PERMANENT SIGNING	SHEET 40	E

2

N

10-1

ALANA SPRINGS CAMPGROUND 1.8

TO REMAIN

WEST 14

REMOVE

WEST 14

J4-1
36" X 54"

10-3

EXACT LOCATION OF NO PASSING ZONE SIGN TO BE DETERMIMED AFTER NO PASSING ZONES ARE LOCATED

NO PASSING ZONE

REMOVE

NO PASSING ZONE

W14-3
48" X 36"

10-5

325+00

330+00

335+00

340+00

340+95

10-4

PURPLE HEART MEMORIAL MARKER ½MILE

D1-1
78" X 36"

10-2

PURPLE HEART MEMORIAL MARKER ½MILE

REMOVE

EXISTING SIGN ON WOOD POST(S)

PROPOSED SIGN ON WOOD POST(S)

STOP PROPOSED SIGN

STOP EXISTING SIGN TO REMAIN OR EXISTING SIGN TO BE REMOVED

(X) DESIGNATES SIGN ITEM NUMBER

PROJECT NO: 1643-05-75	HWY: USH 14	COUNTY: RICHLAND	PERMANENT SIGNING	SHEET 41	E

FILE NAME : L:\Projects\11099\dwg\023210_ps.dgn PLOT DATE : 07/10/12 PLOT BY : tmoyer PLOT NAME : PLOT SCALE : 1:200

2

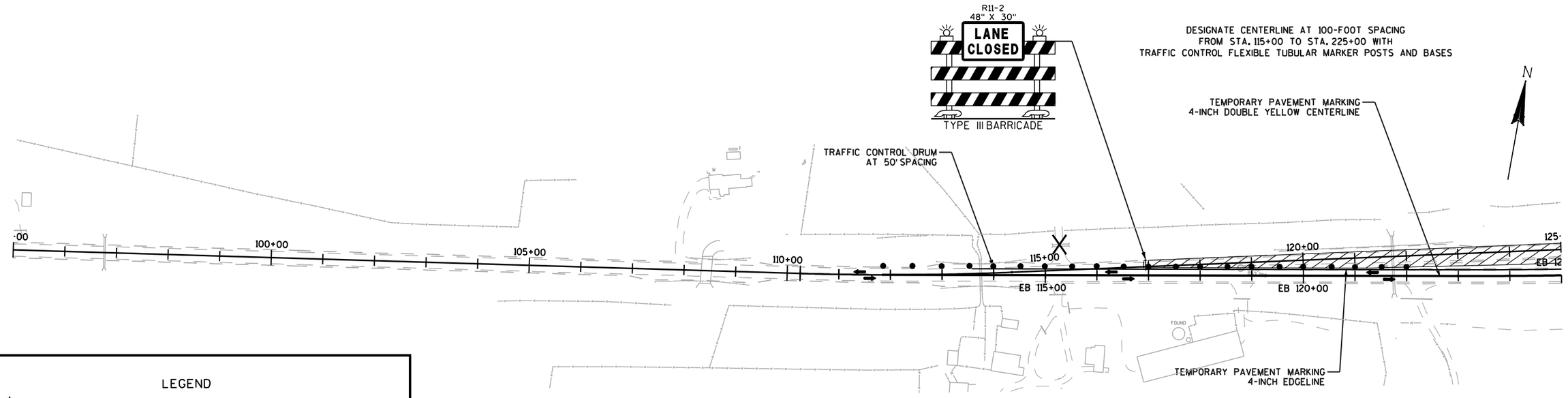

WESTBOUND LANES CLOSED

LEGEND

- TYPE III BARRICADE
- TYPE III BARRICADE WTH ATTACHED SIGN
- TRAFFIC CONTROL DRUM
- TRAFFIC CONTROL DRUM WITH TYPE C STEADY BURN LIGHT
- SIGN ON PERMANENT SUPPORT
- SIGN ON TEMPORARY SUPPORT
- (A) TYPE A WARNING LIGHT (FLASHING)
- (C) TYPE C WARNING LIGHT (STEADY BURN)
- WORK AREA
- DIRECTION OF TRAFFIC
- X ACCESS REQUIRED AT ALL TIMES

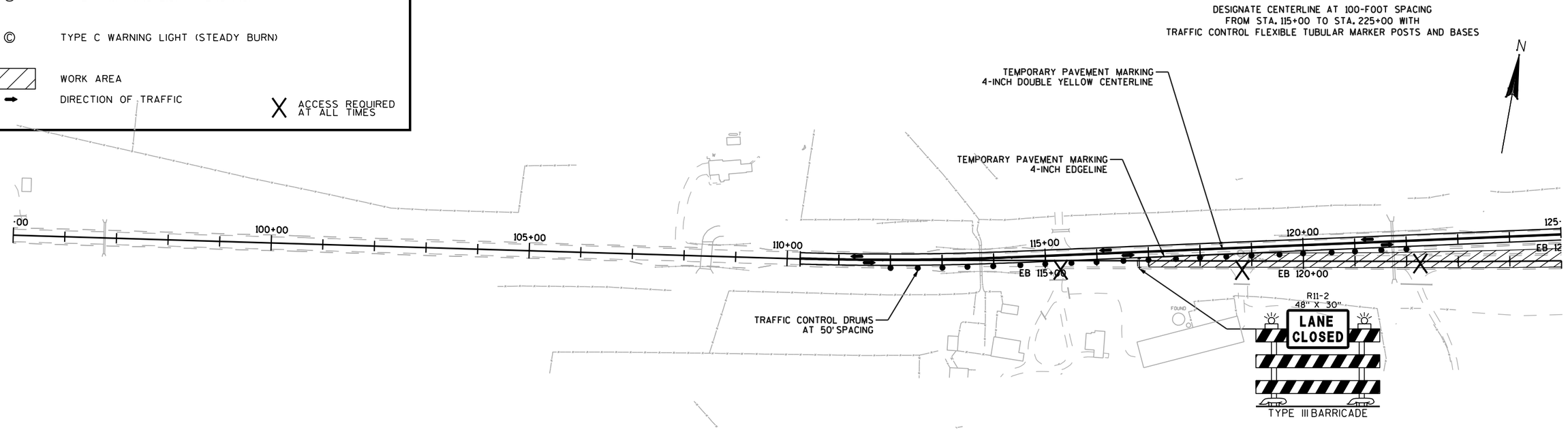

EASTBOUND LANES CLOSED

PROJECT NO: 1643-05-75	HWY: USH 14	COUNTY: RICHLAND	TRAFFIC CONTROL	SHEET 42	E

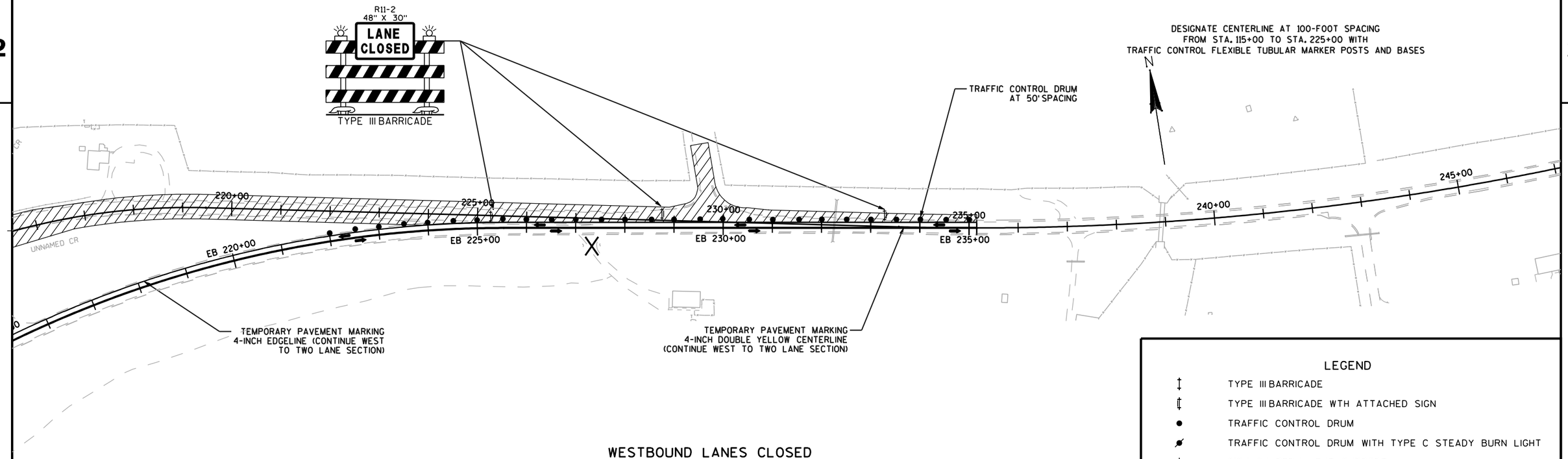

WESTBOUND LANES CLOSED

LEGEND

- TYPE III BARRICADE
- TYPE III BARRICADE WTH ATTACHED SIGN
- TRAFFIC CONTROL DRUM
- TRAFFIC CONTROL DRUM WITH TYPE C STEADY BURN LIGHT
- SIGN ON PERMANENT SUPPORT
- SIGN ON TEMPORARY SUPPORT
- (A) TYPE A WARNING LIGHT (FLASHING)
- (C) TYPE C WARNING LIGHT (STEADY BURN)
- WORK AREA
- DIRECTION OF TRAFFIC
- X ACCESS REQUIRED AT ALL TIMES

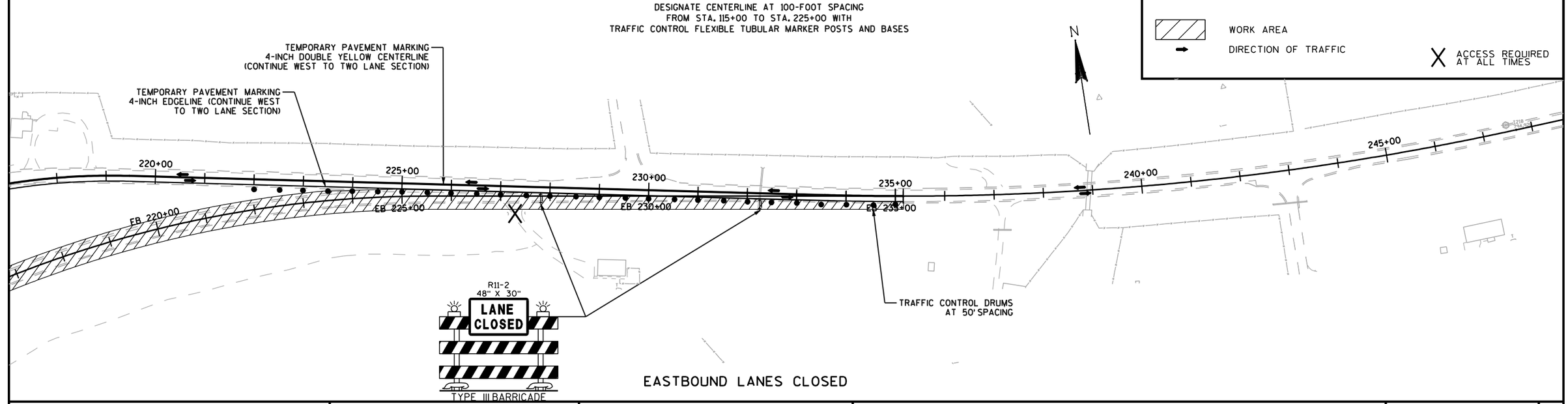

EASTBOUND LANES CLOSED

PROJECT NO: 1643-05-75	HWY: USH 14	COUNTY: RICHLAND	TRAFFIC CONTROL	SHEET 43	E

CURVE 1
PI WB35+95.32
N=448,551.00
E=641,101.32
Δ=44° 42' 36" (RT)
D=1° 45' 00"
T=1,346.45
L=2,554.85
R=3,274.04

CURVE 2
PI WB76+48.75
N=447,804.32
E=645,225.76
Δ=18° 38' 46" (LT)
D=0° 45' 00"
T=1,254.16
L=2,486.14
R=7,639.43

CURVE 3
PI WB112+30.27
N=448,329.81
E=648,790.94
Δ=4° 06' 00" (LT)
D=1° 00' 00"
T=205.09
L=410.00
R=5,729.58

CURVE 7
PI WB162+58.34
N=449,416.80
E=653,700.28
Δ=10° 56' 30" (RT)
D=1° 00' 00"
T=548.75
L=1,094.17
R=5,729.58

CURVE 9
PI WB177+76.09
N=449,457.75
E=655,220.82
Δ=24° 57' 00" (RT)
D=4° 00' 00"
T=316.90
L=623.75
R=1,432.39

CURVE 10
PI WB186+03.49
N=449,125.07
E=655,989.35
Δ=34° 43' 30" (LT)
D=5° 00' 00"
T=358.29
L=694.50
R=1,145.92

CURVE 12
PI WB197+07.23
N=449,346.01
E=657,093.27
Δ=25° 34' 00" (LT)
D=2° 00' 00"
T=649.99
L=1,278.33
R=2,864.79

CURVE 13
PI WB214+27.26
N=450,391.37
E=658,486.34
Δ=47° 21' 20" (RT)
D=4° 16' 33"
T=587.60
L=1,107.52
R=1,340.00

CURVE 15
PI WB240+66.08
N=449,889.50
E=661,147.76
Δ=13° 56' 03" (LT)
D=0° 59' 16"
T=708.77
L=1,410.54
R=5,800.00

CURVE 16
PI WB280+86.17
N=450,142.77
E=665,167.48
Δ=17° 06' 06" (RT)
D=1° 00' 00"
T=861.49
L=1,710.18
R=5,729.58

CURVE 17
PI WB316+38.79
N=449,302.05
E=668,632.38
Δ=2° 12' 02" (RT)
D=0° 15' 00"
T=440.15
L=880.19
R=22,918.32

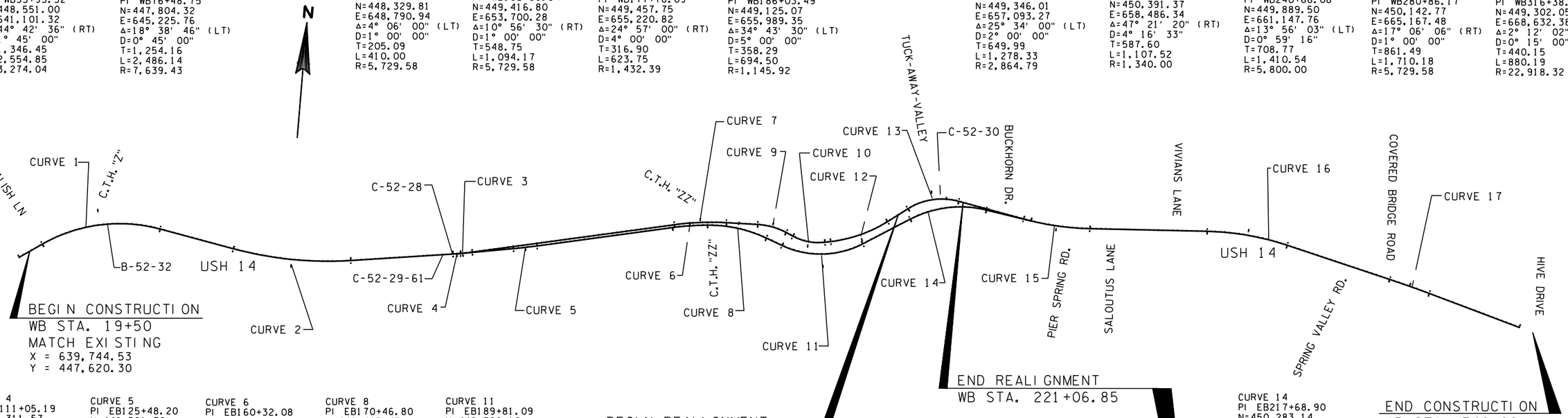

BEGIN CONSTRUCTION
WB STA. 19+50
MATCH EXISTING
X = 639,744.53
Y = 447,620.30

CURVE 4
PI EB111+05.19
N=448,311.57
E=648,667.19
Δ=1° 36' 00" (LT)
D=1° 00' 00"
T=80.01
L=160.00
R=5,729.58

CURVE 5
PI EB125+48.20
N=448,561.76
E=650,088.37
Δ=2° 30' 00" (LT)
D=0° 30' 00"
T=250.04
L=500.00
R=11,459.16

CURVE 6
PI EB160+32.08
N=449,314.92
E=653,489.94
Δ=7° 22' 15" (RT)
D=1° 00' 00"
T=369.05
L=737.08
R=5,729.58

CURVE 8
PI EB170+46.80
N=449,405.45
E=654,501.63
Δ=25° 26' 26" (RT)
D=2° 00' 00"
T=646.67
L=1,272.03
R=2,864.79

CURVE 11
PI EB189+81.09
N=448,726.12
E=656,335.46
Δ=52° 31' 45" (LT)
D=3° 00' 00"
T=942.44
L=1,750.97
R=1,909.86

BEGIN REALIGNMENT
WB STA. 206+79.99

END REALIGNMENT
WB STA. 221+06.85

CURVE 14
PI EB217+68.90
N=450,283.14
E=658,807.74
Δ=41° 05' 40" (RT)
D=2° 30' 00"
T=859.03
L=1,643.77
R=2,291.83

END CONSTRUCTION
WB STA. 340+00
MATCH EXISTING
X = 670,904.05
Y = 448,657.56

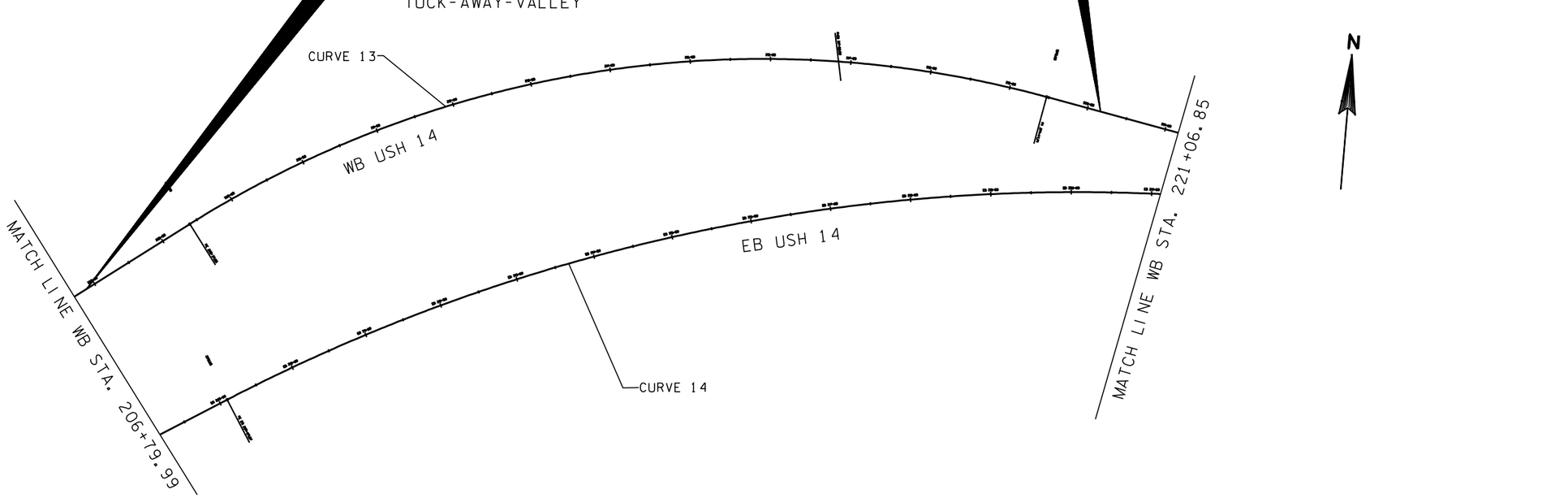

SEE NEXT SHEET FOR
ADDITIONAL ALIGNMENT INFORMATION.

PROJECT NO:1643-05-75	HWY: USH 14	COUNTY: RICHLAND COUNTY	ALIGNMENT DIAGRAM - MAINLINE	SHEET 44

USH 14 ALIGNMENT - 2-LANE SECTION AND WB BOUND DIVIDED SECTION

		STATION	NORTHING	EASTING
Element:	Linear			
	POB	16+94.43	447475.73	639533.77
	PC	22+48.87	447789.36	639990.98
	Tangent Direction:	N 55°33'05" E		
	Tangent Length:	554.44		
Element:	Circular			
	PC	22+48.87	447789.36	639990.98
	PI	35+95.32	448551.00	641101.32
	CC		445089.47	641842.99
	PT	48+03.72	448311.14	642426.24
	Radius:	3274.04		
	Superelevation:	4.90%		
	Delta:	44°42'36" Right		
	Degree of Curvature:	1°45'00"		
	Length:	2554.85		
	Tangent:	1346.45		
	Chord:	2490.52		
Element:	Linear			
	PT	48+03.72	448311.14	642426.24
	PC	63+94.59	448027.74	643991.66
	Tangent Direction:	S 79°44'19" E		
	Tangent Length:	1590.87		
Element:	Circular			
	PC	63+94.59	448027.74	643991.66
	PI	76+48.75	447804.32	645225.76
	CC		455544.98	645352.55
	PT	88+80.73	447987.20	646466.51
	Radius:	7639.43		
	Superelevation:	-2.00%		
	Delta:	18°38'46" Left		
	Degree of Curvature:	0°45'00"		
	Length:	2486.14		
	Tangent:	1254.16		
	Chord:	2475.19		
Element:	Linear			
	PT	88+80.73	447987.20	646466.51
	PC	110+25.18	448299.90	648588.04
	Tangent Direction:	N 81°36'55" E		
	Tangent Length:	2144.45		
Element:	Circular			
	PC	110+25.18	448299.9	648588.04
	PI	112+30.27	448329.81	648790.94
	CC		453968.24	647752.57
	PT	114+35.18	448374.14	648991.18
	Radius:	5729.58		
	Superelevation:	-3.00%		
	Delta:	4°06'00" Left		
	Degree of Curvature:	1°00'00"		
	Length:	410.00		
	Tangent:	205.09		
	Chord:	409.91		
Element:	Linear			
	PT	114+35.18	448374.14	648991.18
	PC	157+09.58	449298.17	653164.5
	Tangent Direction:	N 77°30'55" E		
	Tangent Length:	4274.4		
Element:	Circular			
	PC	157+09.58	449298.17	653164.50
	PI	162+58.34	449416.80	653700.28
	CC		443704.07	654403.11
	PT	168+03.75	449431.57	654248.83
	Radius:	5729.58		
	Superelevation:	2.00%		
	Delta:	10°56'30" Right		
	Degree of Curvature:	1°00'00"		
	Length:	1094.17		
	Tangent:	548.75		
	Chord:	1092.51		

USH 14 ALIGNMENT - 2-LANE SECTION AND WB BOUND DIVIDED SECTION CON'T

Element:	Linear			
	PT	168+03.75	449431.57	654248.83
	PC	174+59.19	449449.22	654904.04
	Tangent Direction:	N 88°27'25" E		
	Tangent Length:	655.44		
Element:	Circular			
	PC	174+59.19	449449.22	654904.04
	PI	177+76.09	449457.75	655220.82
	CC		448017.35	654942.60
	PT	180+82.94	449331.86	655511.64
	Radius:	1432.39		
	Superelevation:	7.60%		
	Delta:	24°57'00" Right		
	Degree of Curvature:	4°00'00"		
	Length:	623.75		
	Tangent:	316.90		
	Chord:	618.83		
Element:	Linear			
	PT	180+82.94	449331.86	655511.64
	PC	182+45.21	449267.40	655660.55
	Tangent Direction:	S 66°35'35" E		
	Tangent Length:	162.27		
Element:	Circular			
	PC	182+45.21	449267.40	655660.55
	PI	186+03.49	449125.07	655989.35
	CC		450319.02	656115.78
	PT	189+39.71	449195.38	656340.67
	Radius:	1145.92		
	Superelevation:	-8.00%		
	Delta:	34°43'30" Left		
	Degree of Curvature:	5°00'00"		
	Length:	694.50		
	Tangent:	358.29		
	Chord:	683.92		
Element:	Linear			
	PT	189+39.71	449195.38	656340.67
	PC	190+57.24	449218.45	656455.92
	Tangent Direction:	N 78°40'55" E		
	Tangent Length:	117.54		
Element:	Circular			
	PC	190+57.24	449218.45	656455.92
	PI	197+07.23	449346.01	657093.27
	CC		452027.53	655893.70
	PT	203+35.58	449736.13	657613.16
	Radius:	2864.79		
	Superelevation:	-4.70%		
	Delta:	25°34'00" Left		
	Degree of Curvature:	2°00'00"		
	Length:	1278.33		
	Tangent:	649.99		
	Chord:	1267.75		
Element:	Linear			
	PT	203+35.58	449736.13	657613.16
	PC	208+39.66	450038.69	658016.35
	Tangent Direction:	N 53°06'55" E		
	Tangent Length:	504.09		
Element:	Circular			
	PC	208+39.66	450038.69	658016.35
	PI	214+27.26	450391.37	658486.34
	CC		448966.90	658820.63
	PT	219+47.19	450284.58	659064.15
	Radius:	1340.00		
	Superelevation:	6.00%		
	Delta:	47°21'20" Right'		
	Degree of Curvature:	4°16'33"		
	Length:	1107.52		
	Tangent:	587.60		
	Chord:	1076.27		

USH 14 ALIGNMENT - 2-LANE SECTION AND WB BOUND DIVIDED SECTION CON'T

Element:	Linear			
	PT	219+47.19	450284.58	659064.15
	PC	233+57.31	450028.31	660450.79
	Tangent Direction:	S 79°31'45" E		
	Tangent Length:	1410.12		
Element:	Circular			
	PC	233+57.31	450028.31	660450.79
	PI	240+66.08	449899.50	661147.76
	CC		455731.72	661504.87
	PT	247+67.85	449942.32	661855.23
	Radius:	5800.00		
	Superelevation:	-3.00%		
	Delta:	13°56'03" Left		
	Degree of Curvature:	0°59'16"		
	Length:	1410.54		
	Tangent:	708.77		
	Chord:	1407.07		
Element:	Linear			
	PT	247+67.85	449942.32	661855.23
	PC	272+24.67	450090.73	664307.56
	Tangent Direction:	N 86°32'13" E		
	Tangent Length:	2456.82		
Element:	Circular			
	PC	272+24.67	450090.73	664307.56
	PI	280+86.17	450142.77	665167.48
	CC		444371.61	664653.67
	PT	289+34.85	449939.63	666004.69
	Radius:	5729.58		
	Superelevation:	3.00%		
	Delta:	17°06'06" Right		
	Degree of Curvature:	1°00'00"		
	Length:	1710.18		
	Tangent:	861.49		
	Chord:	1703.84		
Element:	Linear			
	PT	289+34.85	449939.63	666004.69
	PC	311+98.64	449405.84	668204.64
	Tangent Direction:	S 76°21'41" E		
	Tangent Length:	2263.79		
Element:	Circular			
	PC	311+98.64	449405.84	668204.64
	PI	316+38.79	449302.05	668632.38
	CC		427133.76	662800.58
	PT	320+78.83	449181.92	669055.82
	Radius:	22918.32		
	Superelevation:	2.00%		
	Delta:	2°12'02" Right		
	Degree of Curvature:	0°15'00"		
	Length:	880.19		
	Tangent:	440.15		
	Chord:	880.14		
Element:	Linear			
	PT	320+78.83	449181.92	669055.82
	POE	340+94.62	448631.73	670995.08
	Tangent Direction:	S 74°09'39" E		
	Tangent Length:	2015.79		

USH 14 EASTBOUND ALIGNMENT

		Station	Northing	Easting
Element:	Circular			
	POB	EB 110+25.18	448299.90	648588.04
	PI	EB 111+05.19	448311.57	648667.19
	CC		453968.24	647752.57
	PT	EB 111+85.18	448325.44	648745.99
	Radius:	5729.58		
	Superelevation:	-0.02		
	Delta:	1°36'00" Left		
	Degree of Curvature	1°00'00"		
	Length:	160.00		
	Tangent:	80.01		
	Chord:	159.99		
Element:	Linear			
	PT	EB 111+85.18	448325.44	648745.99
	PC	EB 122+98.17	448518.41	649842.11
	Tangent Direction:	N 80°00'55" E		
	Tangent Length:	1112.99		
Element:	Circular			
	PC	EB 122+98.17	448518.41	649842.11
	PI	EB 125+48.20	448561.76	650088.37
	CC		459804.02	647855.29
	PT	EB 127+98.17	448615.82	650332.49
	Radius:	11459.16		
	Superelevation:	-2.00%		
	Delta:	2°30'00" Left		
	Degree of Curvature:	0°30'00"		
	Length:	500.00		
	Tangent:	250.04		
	Chord:	499.96		
Element:	Linear			
	PT	EB 127+98.17	448615.82	650332.49
	PC	EB 156+63.03	449235.13	653129.62
	Tangent Direction:	N 77°30'55" E		
	Tangent Length:	2864.87		
Element:	Circular			
	PC	EB 156+63.03	449235.13	653129.62
	PI	EB 160+32.08	449314.92	653489.94
	CC		443641.04	654368.22
	PCC	EB 164+00.12	449347.81	653857.53
	Radius:	5729.58		
	Superelevation:	2.00%		
	Delta:	7°22'15" Right		
	Degree of Curvature:	1°00'00"		
	Length:	737.08		
	Tangent:	369.05		
	Chord:	736.58		

USH 14 EASTBOUND ALIGNMENT CON'T

Element:	Circular			
	PCC	EB 164+00.12	449347.81	653857.53
	PI	EB 170+46.80	449405.45	654501.63
	CC		446494.42	654112.88
	PT	EB 176+72.15	449180.81	655108.03
	Radius:	2864.79		
	Superelevation:	5.60%		
	Delta:	25°26'26" Right		
	Degree of Curvature:	2°00'00"		
	Length:	1272.03		
	Tangent:	646.67		
	Chord:	1261.6		
Element:	Linear			
	PT	EB 176+72.15	449180.81	655108.03
	PC	EB 180+38.64	449053.50	655451.71
	Tangent Direction:	S 69°40'24" E		
	Tangent Length:	366.49		
Element:	Circular			
	PC	EB 180+38.64	449053.50	655451.71
	PI	EB 189+81.09	448726.12	656335.46
	CC		450844.43	656115.14
	PT	EB 197+89.62	449228.36	657132.93
	Radius:	1909.86		
	Superelevation:	-7.70%		
	Delta:	52°31'45" Left		
	Degree of Curvature:	3°00'00"		
	Length:	1750.97		
	Tangent:	942.44		
	Chord:	1690.29		
Element:	Linear			
	PT	EB 197+89.62	449228.36	657132.93
	PC	EB 209+09.87	449825.35	658080.85
	Tangent Direction:	N 57°47'51" E		
	Tangent Length:	1120.25		
Element:	Circular			
	PC	EB 209+09.87	449825.35	658080.85
	PI	EB 217+68.90	450283.14	658807.74
	CC		447886.07	659302.19
	PT	EB 225+53.64	450150.36	659656.44
	Radius:	2291.83		
	Superelevation:	6.90%		
	Delta:	41°05'40" Right		
	Degree of Curvature:	2°30'00"		
	Length:	1643.77		
	Tangent:	859.03		
	Chord:	1608.77		
Element:	Linear			
	PT	EB 225+53.64	450150.36	659656.44
	POE	EB 235+15.89	450001.62	660607.13
	Tangent Direction:	S 81°06'29" E		
	Tangent Length:	962.25		

2

N

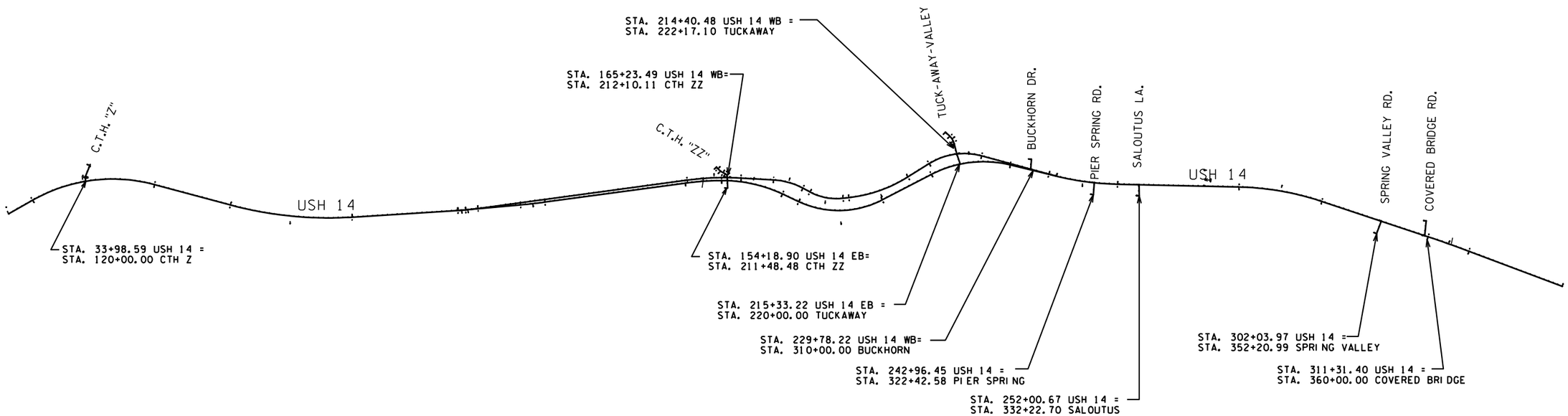

SEE NEXT SHEET FOR
ADDITIONAL ALIGNMENT INFORMATION.

PROJECT NO: 1643-05-75	HWY: USH 14	COUNTY: RICHLAND COUNTY	ALIGNMENT DIAGRAM - SIDEROADS	SHEET 46

CTH Z ALIGNMENT

		STATION	NORTHING	EASTING
Element:	Linear			
	POB	120+00.00	448261.66	641032.73
	PC	120+59.66	448319.46	641017.97
	Tangent Direction:	N 14^19'43" W		
	Tangent Length:	59.66		
Element:	Circular			
	PC	120+59.66	448319.46	641017.97
	PI	120+80.94	448340.09	641012.7
	CC		448338.02	641090.64
	PT	121+01.14	448360.41	641019.05
	Radius:	75		
	Delta:	31^41'39" R		
	Degree of Curvature:	76^23'40"		
	Length:	41.49		
	Tangent:	21.29		
	Chord:	40.96		
Element:	Linear			
	PT	121+01.14	448360.41	641019.05
	POE	123+35.17	448583.77	641088.9
	Tangent Direction:	N 17^21'56" E		
	Tangent Length:	234.02		

CTH ZZ ALIGNMENT

		STATION	NORTHING	EASTING
Element:	Linear			
	POB	209+99.51	449207.96	653993.06
	PC	212+23.60	449430.57	653967.43
	Tangent Direction:	N 6^34'09" W		
	Tangent Length:	224.09		
Element:	Circular			
	PC	212+23.60	449430.57	653967.43
	PI	212+67.55	449474.24	653962.4
	CC		449421.99	653892.92
	PT	213+03.11	449491.19	653921.85
	Radius:	75.00		
	Superelevation:	-2.000%		
	Delta:	60^44'29" Left		
	Degree of Curvature:	76^23'40"		
	Length:	79.51		
	Tangent:	43.95		
	Chord:	75.84		
Element:	Linear			
	PT	213+03.11	449491.19	653921.85
	PC	213+47.53	449508.32	653880.87
	Tangent Direction:	N 67^18'38" W		
	Tangent Length:	44.42		
Element:	Circular			
	PC	213+47.53	449508.32	653880.87
	PI	214+16.29	449534.85	653817.43
	CC		449868.14	654031.3
	PT	214+83.66	449581.47	653766.88
	Radius:	390.00		
	Superelevation:	2.000%		
	Delta:	19^59'53" Right		
	Degree of Curvature:	14^41'28"		
	Length:	136.12		
	Tangent:	68.76		
	Chord:	135.43		
Element:	Linear			
	PT	214+83.66	449581.47	653766.88
	POE	215+24.82	449609.37	653736.63
	Tangent Direction:	N 47^18'45" W		
	Tangent Length:	41.16		

TUCKAWAY VALLEY ROAD ALIGNMENT

		STATION	NORTHING	EASTING
Element:	Linear			
	POB	220+00.00	450082.17	658646.74
	PI	222+17.10	450281.40	658560.48
	Tangent Direction:	N 23^24'42" W		
	Tangent Length:	217.10		
Element:	Linear			
	PI	222+17.10	450281.40	658560.48
	PI	224+25.53	450478.37	658492.29
	Tangent Direction:	N 19^05'41" W		
	Tangent Length:	208.43		
Element:	Linear			
	PI	224+25.53	450478.37	658492.29
	PC	224+72.30	450520.59	658472.18
	Tangent Direction:	N 25^28'02" W		
	Tangent Length:	46.77		
Element:	Circular			
	PC	224+72.30	450520.59	658472.18
	PI	225+40.47	450582.14	658442.87
	CC		450391.59	658201.33
	PT	226+06.37	450624.97	658389.84
	Radius:	300.00		
	Delta:	25^36'16" Left		
	Degree of Curvature:	19^05'55"		
	Length:	134.07		
	Tangent:	68.17		
	Chord:	132.95		
Element:	Linear			
	PT	226+06.37	450624.97	658389.84
	POE	227+28.20	450701.53	658295.06
	Tangent Direction:	N 51^04'18" W		
	Tangent Length:	121.83		

BUCKHORN ROAD ALIGNMENT

		STATION	NORTHING	EASTING
Element:	Linear			
	POB	310+00.00	450097.20	660078.02
	POE	312+00.00	450297.19	660075.24
	Tangent Direction:	N 0^47'43" W		
	Tangent Length:	200.00		

PIER SPRING ROAD ALIGNMENT

		STATION	NORTHING	EASTING
Element:	Linear			
	POB	320+00.00	449690.40	661384.36
	POE	322+42.58	449932.98	661384.05
	Tangent Direction:	N 0^04'21" W		
	Tangent Length:	242.58		

SALOUTUS LANE ALIGNMENT

		STATION	NORTHING	EASTING
Element:	Linear			
	POB	330+00.00	449746.87	662309.44
	POE	332+22.70	449968.46	662287.26
	Tangent Direction:	N 5^43'03" W		
	Tangent Length:	222.70		

SPRING VALLEY ROAD ALIGNMENT

		STATION	NORTHING	EASTING
Element:	Linear			
	POB	349+50.00	449380.17	667162.33
	POE	352+20.99	449640.37	667238.02
	Tangent Direction:	N 16^13'09" E		
	Tangent Length:	270.99		

COVERED BRIDGE ROAD ALIGNMENT

		STATION	NORTHING	EASTING
Element:	Linear			
	POB	360+00.00	449421.69	668139.30
	POE	363+00.00	449721.66	668143.56
	Tangent Direction:	N 0^48'51" E		
	Tangent Length:	300.00		

T 216 - PK NAIL IN THE BITIMINUS MEDIAN JUST
BEFORE THE 4 LANE STARTS
2.1 MILES EAST OF STH 171

CONTROL POINT T216
X = 649,427.301
Y = 448,460.939
Z = 853.78

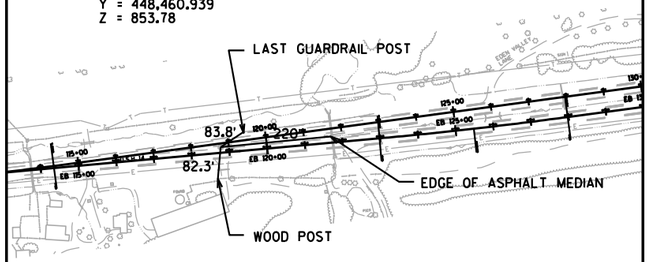

T 217 - PK NAIL IN WEST LANE ON ONE WAY WB HILL AREA.
0.8 MILES FROM BOTTOM OF HILL WHERE USH 14 SPLITS.
4.7' FROM EDGE OF PAVEMENT.

CONTROL POINT T217
X = 655,526.723
Y = 449,313.058
Z = 950.19

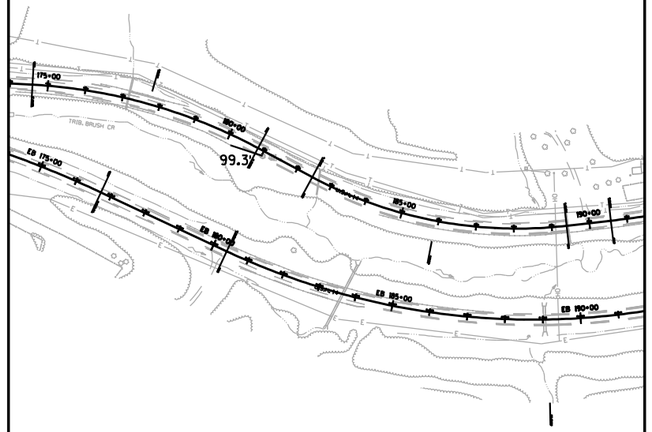

T 218 - PK NAIL 1.6 MILES EAST OF CTH ZZ
WEST OF DAYTON HILLS TAVERN. 1.6' FROM
NORTH EDGE OF PAVEMENT.

CONTROL POINT T218
X = 661,837.191
Y = 449,955.699
Z = 794.92

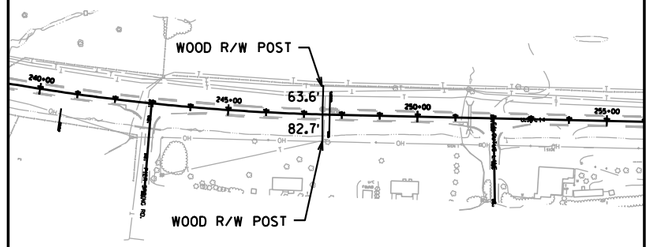

T 220 - PK NAIL IN NORTH EDGE OF PAVEMENT
250' +/- EAST OF COVERED BRIDGE ROAD
1.6' FROM NORTH EDGE OF ROAD.

CONTROL POINT T220
X = 668,410.254
Y = 449,370.043
Z = 764.06

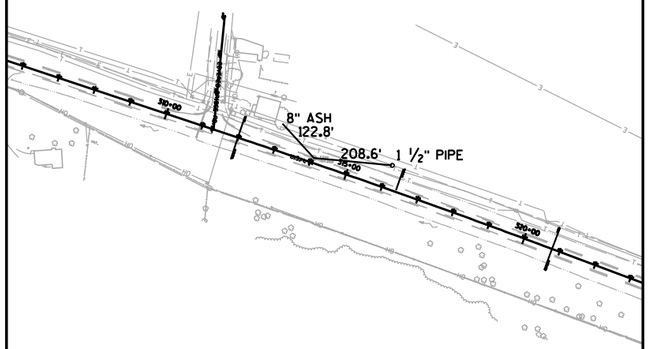

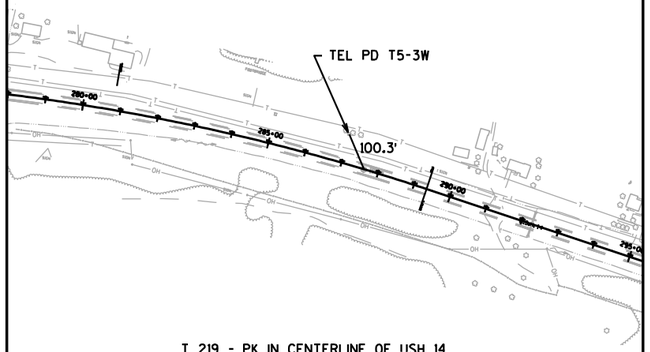

T 219 - PK IN CENTERLINE OF USH 14
0.5 MILES WEST OF COVERED BRIDGE ROAD

CONTROL POINT T219
X = 665,836.441
Y = 449,978.068
Z = 774.20

DATE 27NOV12 E S T I M A T E O F Q U A N T I T I E S

LINE NUMBER	ITEM	ITEM DESCRIPTION	UNIT	TOTAL	1643-05-75 QUANTITY
0010	201.0105	CLEARING	STA	9.000	9.000
0020	201.0205	GRUBBING	STA	9.000	9.000
0030	203.0100	REMOVING SMALL PIPE CULVERTS	EACH	8.000	8.000
0040	203.0200	REMOVING OLD STRUCTURE (STATION) 01. 74+75	LS	1.000	1.000
0050	203.0200	REMOVING OLD STRUCTURE (STATION) 02. 108+43	LS	1.000	1.000
0060	203.0200	REMOVING OLD STRUCTURE (STATION) 03. 113+75	LS	1.000	1.000
0070	203.0200	REMOVING OLD STRUCTURE (STATION) 04. 120+70	LS	1.000	1.000
0080	203.0200	REMOVING OLD STRUCTURE (STATION) 05. 177+10	LS	1.000	1.000
0090	203.0200	REMOVING OLD STRUCTURE (STATION) 06. 210+90	LS	1.000	1.000
0100	203.0200	REMOVING OLD STRUCTURE (STATION) 07. 214+06.61	LS	1.000	1.000
0110	203.0200	REMOVING OLD STRUCTURE (STATION) 08. 266+20	LS	1.000	1.000
0120	203.0200	REMOVING OLD STRUCTURE (STATION) 09. 277+80	LS	1.000	1.000
0130	203.0200	REMOVING OLD STRUCTURE (STATION) 10. 302+50, NORTHEAST WING	LS	1.000	1.000
0140	203.0200	REMOVING OLD STRUCTURE (STATION) 11. 251+35	LS	1.000	1.000
0150	203.0210.S	ABATEMENT OF ASBESTOS CONTAINING MATERIAL (STRUCTURE) 01.B-52-32	***	3,000.000	3,000.000
0160	204.0115	REMOVING ASPHALTIC SURFACE BUTT JOINTS	SY	1,300.000	1,300.000
0170	204.0150	REMOVING CURB & GUTTER	LF	890.000	890.000
0180	204.0165	REMOVING GUARDRAIL	LF	7,207.000	7,207.000
0190	205.0100	EXCAVATION COMMON	CY	10,856.000	10,856.000
0200	205.0200	EXCAVATION ROCK	CY	4,835.000	4,835.000
0210	205.9015.S	GRADING SHAPING & FINISHING INTERSECTION (LOCATION) 01. PIER SPRING ROAD	LS	1.000	1.000
0220	205.9015.S	GRADING SHAPING & FINISHING INTERSECTION (LOCATION) 02. SALUTOUS ROAD	LS	1.000	1.000
0230	205.9015.S	GRADING SHAPING & FINISHING INTERSECTION (LOCATION) 03. SPRING VALLEY ROAD	LS	1.000	1.000
0240	205.9015.S	GRADING SHAPING & FINISHING INTERSECTION (LOCATION) 04. COVERED BRIDGE ROAD	LS	1.000	1.000
0250	206.2000	EXCAVATION FOR STRUCTURES CULVERTS (STRUCTURE) 01. C-52-24, NORTHEAST WING	LS	1.000	1.000
0260	206.2000	EXCAVATION FOR STRUCTURES CULVERTS (STRUCTURE) 02. C-52-28	LS	1.000	1.000
0270	206.2000	EXCAVATION FOR STRUCTURES CULVERTS (STRUCTURE) 03. C-52-29	LS	1.000	1.000
0280	206.2000	EXCAVATION FOR STRUCTURES CULVERTS (STRUCTURE) 04. C-52-166	LS	1.000	1.000
0290	206.5000	COFFERDAMS (STRUCTURE) 01. C-52-26	LS	1.000	1.000
0300	206.5000	COFFERDAMS (STRUCTURE) 02. C-52-27	LS	1.000	1.000
0310	206.6000.S	TEMPORARY SHORING	SF	370.000	370.000
0320	208.0100	BORROW	CY	2,723.000	2,723.000
0330	210.0100	BACKFILL STRUCTURE	CY	1,895.000	1,895.000

3

DATE 27NOV12 E S T I M A T E O F Q U A N T I T I E S

LINE NUMBER	ITEM	ITEM DESCRIPTION	UNIT	TOTAL	1643-05-75 QUANTITY
0340	211.0100	PREPARE FOUNDATION FOR ASPHALTIC PAVING (PROJECT) 01. 1643-05-75	LS	1.000	1.000
0350	213.0100	FINISHING ROADWAY (PROJECT) 01. 1643-05-75	EACH	1.000	1.000
0360	305.0110	BASE AGGREGATE DENSE 3/4-INCH	TON	8,500.000	8,500.000
0370	305.0120	BASE AGGREGATE DENSE 1 1/4-INCH	TON	9,025.000	9,025.000
0380	305.0500	SHAPING SHOULDERS	STA	770.000	770.000
0390	311.0115	BREAKER RUN	CY	193.000	193.000
0400	312.0110	SELECT CRUSHED MATERIAL	TON	3,250.000	3,250.000
0410	330.0100	MILL AND RELAY	SY	140,000.000	140,000.000
0420	335.0100	RUBBLIZING	SY	120,950.000	120,950.000
0430	416.1010	CONCRETE SURFACE DRAINS	CY	5.000	5.000
0440	455.0105	ASPHALTIC MATERIAL PG58-28	TON	2,411.000	2,411.000
0450	455.0605	TACK COAT	GAL	7,100.000	7,100.000
0460	460.1103	HMA PAVEMENT TYPE E-3	TON	43,715.000	43,715.000
0470	460.2000	INCENTIVE DENSITY HMA PAVEMENT	DOL	28,110.000	28,110.000
0480	465.0120	ASPHALTIC SURFACE DRIVEWAYS AND FIELD ENTRANCES	TON	270.000	270.000
0490	465.0315	ASPHALTIC FLUMES	SY	235.000	235.000
0500	465.0400	ASPHALTIC SHOULDER RUMBLE STRIP	LF	85,485.000	85,485.000
0510	502.5002	MASONRY ANCHORS TYPE L NO. 4 BARS	EACH	10.000	10.000
0520	502.5005	MASONRY ANCHORS TYPE L NO. 5 BARS	EACH	34.000	34.000
0530	504.0100	CONCRETE MASONRY CULVERTS	CY	362.000	362.000
0540	505.0410	BAR STEEL REINFORCEMENT HS CULVERTS	LB	36,800.000	36,800.000
0550	505.0610	BAR STEEL REINFORCEMENT HS COATED CULVERTS	LB	2,745.000	2,745.000
0560	505.0904	BAR COUPLERS NO. 4	EACH	17.000	17.000
0570	505.0909	BAR COUPLERS NO. 9	EACH	15.000	15.000
0580	506.0105	STRUCTURAL STEEL CARBON	LB	120.000	120.000
0590	509.0301	PREPARATION DECKS TYPE 1	SY	7.000	7.000
0600	509.0302	PREPARATION DECKS TYPE 2	SY	3.000	3.000
0610	509.0500	CLEANING DECKS	SY	352.000	352.000
0620	509.1500	CONCRETE SURFACE REPAIR	SF	24.000	24.000
0630	509.2500	CONCRETE MASONRY OVERLAY DECKS	CY	0.600	0.600
0640	516.0500	RUBBERIZED MEMBRANE WATERPROOFING	SY	75.000	75.000
0650	516.0600.S	SHEET MEMBRANE WATERPROOFING	SY	352.000	352.000
0660	520.0118	CULVERT PIPE CLASS III 18-INCH	LF	255.000	255.000
0670	520.0124	CULVERT PIPE CLASS III 24-INCH	LF	484.000	484.000
0680	520.0142	CULVERT PIPE CLASS III 42-INCH	LF	96.000	96.000
0690	520.0148	CULVERT PIPE CLASS III 48-INCH	LF	146.000	146.000
0700	520.1018	APRON ENDWALLS FOR CULVERT PIPE 18-INCH	EACH	4.000	4.000
0710	520.1024	APRON ENDWALLS FOR CULVERT PIPE 24-INCH	EACH	2.000	2.000
0720	520.1042	APRON ENDWALLS FOR CULVERT PIPE 42-INCH	EACH	2.000	2.000
0730	520.1048	APRON ENDWALLS FOR CULVERT PIPE 48-INCH	EACH	2.000	2.000
0740	520.8000	CONCRETE COLLARS FOR PIPE	EACH	6.000	6.000
0750	521.0118	CULVERT PIPE CORRUGATED STEEL 18-INCH	LF	31.000	31.000
0760	521.0124	CULVERT PIPE CORRUGATED STEEL 24-INCH	LF	34.000	34.000
0770	521.0130	CULVERT PIPE CORRUGATED STEEL 30-INCH	LF	5.000	5.000
0780	521.0136	CULVERT PIPE CORRUGATED STEEL 36-INCH	LF	5.000	5.000
0790	521.0172	CULVERT PIPE CORRUGATED STEEL 72-INCH	LF	15.000	15.000
0800	521.1018	APRON ENDWALLS FOR CULVERT PIPE STEEL 18-INCH	EACH	4.000	4.000
0810	521.1024	APRON ENDWALLS FOR CULVERT PIPE STEEL 24-INCH	EACH	3.000	3.000

3

DATE 27NOV12 E S T I M A T E O F Q U A N T I T I E S

LINE NUMBER	ITEM	ITEM DESCRIPTION	UNIT	TOTAL	1643-05-75 QUANTITY
0820	521.1030	APRON ENDWALLS FOR CULVERT PIPE STEEL 30-INCH	EACH	1.000	1.000
0830	521.1036	APRON ENDWALLS FOR CULVERT PIPE STEEL 36-INCH	EACH	1.000	1.000
0840	521.1072	APRON ENDWALLS FOR CULVERT PIPE STEEL 72-INCH	EACH	4.000	4.000
0850	522.0124	CULVERT PIPE REINFORCED CONCRETE CLASS III 24-INCH	LF	10.000	10.000
0860	522.0136	CULVERT PIPE REINFORCED CONCRETE CLASS III 36-INCH	LF	5.000	5.000
0870	522.1024	APRON ENDWALLS FOR CULVERT PIPE REINFORCED CONCRETE 24-INCH	EACH	2.000	2.000
0880	522.1036	APRON ENDWALLS FOR CULVERT PIPE REINFORCED CONCRETE 36-INCH	EACH	1.000	1.000
0890	522.1042	APRON ENDWALLS FOR CULVERT PIPE REINFORCED CONCRETE 42-INCH	EACH	2.000	2.000
0900	601.0557	CONCRETE CURB AND GUTTER 6-INCH SLOPED 36-INCH TYPE D	LF	1,750.000	1,750.000
0910	606.0200	RIPRAP MEDIUM	CY	36.000	36.000
0920	606.0300	RIPRAP HEAVY	CY	83.000	83.000
0930	611.0642	INLET COVERS TYPE MS	EACH	3.000	3.000
0940	611.3901	INLETS MEDIAN 1 GRATE	EACH	3.000	3.000
0950	614.0010	BARRIER SYSTEM GRADING SHAPING FINISHING	EACH	25.000	25.000
0960	614.0305	STEEL PLATE BEAM GUARD CLASS A	LF	308.750	308.750
0970	614.0345	STEEL PLATE BEAM GUARD SHORT RADIUS	LF	330.250	330.250
0980	614.0370	STEEL PLATE BEAM GUARD ENERGY ABSORBING TERMINAL	EACH	7.000	7.000
0990	614.0390	STEEL PLATE BEAM GUARD SHORT RADIUS TERMINAL	EACH	7.000	7.000
1000	614.2300	MGS GUARDRAIL 3	LF	5,137.500	5,137.500
1010	614.2330	MGS GUARDRAIL 3 K	LF	1,512.500	1,512.500
1020	614.2500	MGS THRIE BEAM TRANSITION	LF	156.000	156.000
1030	614.2610	MGS GUARDRAIL TERMINAL EAT	EACH	32.000	32.000
1040	614.2620	MGS GUARDRAIL TERMINAL TYPE 2	EACH	10.000	10.000
1050	618.0100	MAINTENANCE AND REPAIR OF HAUL ROADS (PROJECT) 01. 1643-05-75	EACH	1.000	1.000
1060	619.1000	MOBILIZATION	EACH	1.000	1.000
1070	625.0100	TOPSOIL	SY	24,000.000	24,000.000
1080	627.0200	MULCHING	SY	24,000.000	24,000.000
1090	628.1504	SILT FENCE	LF	18,300.000	18,300.000
1100	628.1520	SILT FENCE MAINTENANCE	LF	18,300.000	18,300.000
1110	628.1905	MOBILIZATIONS EROSION CONTROL	EACH	4.000	4.000
1120	628.1910	MOBILIZATIONS EMERGENCY EROSION CONTROL	EACH	3.000	3.000
1130	628.7020	INLET PROTECTION TYPE D	EACH	6.000	6.000
1140	628.7555	CULVERT PIPE CHECKS	EACH	250.000	250.000
1150	629.0210	FERTILIZER TYPE B	CWT	1,540.000	1,540.000
1160	630.0120	SEEDING MIXTURE NO. 20	LB	660.000	660.000
1170	631.1000	SOD LAWN	SY	138.000	138.000
1180	633.5200	MARKERS CULVERT END	EACH	32.000	32.000
1190	634.0614	POSTS WOOD 4X6-INCH X 14-FT	EACH	79.000	79.000
1200	634.0616	POSTS WOOD 4X6-INCH X 16-FT	EACH	35.000	35.000
1210	637.0202	SIGNS REFLECTIVE TYPE II	SF	912.030	912.030
1220	638.2101	MOVING SIGNS TYPE I	EACH	1.000	1.000
1230	638.2602	REMOVING SIGNS TYPE II	EACH	108.000	108.000
1240	638.3000	REMOVING SMALL SIGN SUPPORTS	EACH	106.000	106.000
1250	638.4000	MOVING SMALL SIGN SUPPORTS	EACH	1.000	1.000

3

DATE 27NOV12 E S T I M A T E O F Q U A N T I T I E S

LINE NUMBER	ITEM	ITEM DESCRIPTION	UNIT	TOTAL	1643-05-75 QUANTITY
1260	642.5001	FIELD OFFICE TYPE B	EACH	1.000	1.000
1270	643.0200	TRAFFIC CONTROL SURVEILLANCE AND MAINTENANCE (PROJECT) 01. 1643-05-75	DAY	180.000	180.000
1280	643.0300	TRAFFIC CONTROL DRUMS	DAY	15,500.000	15,500.000
1290	643.0420	TRAFFIC CONTROL BARRICADES TYPE III	DAY	1,800.000	1,800.000
1300	643.0500	TRAFFIC CONTROL FLEXIBLE TUBULAR MARKER POSTS	EACH	220.000	220.000
1310	643.0600	TRAFFIC CONTROL FLEXIBLE TUBULAR MARKER BASES	EACH	220.000	220.000
1320	643.0705	TRAFFIC CONTROL WARNING LIGHTS TYPE A	DAY	2,200.000	2,200.000
1330	643.0715	TRAFFIC CONTROL WARNING LIGHTS TYPE C	DAY	8,100.000	8,100.000
1340	643.0900	TRAFFIC CONTROL SIGNS	DAY	21,000.000	21,000.000
1350	645.0105	GEOTEXTILE FABRIC TYPE C	SY	571.000	571.000
1360	645.0120	GEOTEXTILE FABRIC TYPE HR	SY	289.000	289.000
1370	646.0106	PAVEMENT MARKING EPOXY 4-INCH	LF	70,625.000	70,625.000
1380	646.0126	PAVEMENT MARKING EPOXY 8-INCH	LF	950.000	950.000
1390	646.0406	PAVEMENT MARKING SAME DAY EPOXY 4-INCH	LF	48,535.000	48,535.000
1400	647.0566	PAVEMENT MARKING STOP LINE EPOXY 18-INCH	LF	300.000	300.000
1410	647.0736	PAVEMENT MARKING DIAGONAL EPOXY 18-INCH	LF	460.000	460.000
1420	648.0100	LOCATING NO-PASSING ZONES	MI	6.070	6.070
1430	649.0100	TEMPORARY PAVEMENT MARKING 4-INCH	LF	12,565.000	12,565.000
1440	650.4500	CONSTRUCTION STAKING SUBGRADE	LF	1,400.000	1,400.000
1450	650.5000	CONSTRUCTION STAKING BASE	LF	1,400.000	1,400.000
1460	650.5500	CONSTRUCTION STAKING CURB GUTTER AND CURB & GUTTER	LF	1,750.000	1,750.000
1470	650.6000	CONSTRUCTION STAKING PIPE CULVERTS	EACH	31.000	31.000
1480	650.6500	CONSTRUCTION STAKING STRUCTURE LAYOUT (STRUCTURE) 01. C-52-166	LS	1.000	1.000
1490	650.8000	CONSTRUCTION STAKING RESURFACING REFERENCE	LF	41,350.000	41,350.000
1500	650.9910	CONSTRUCTION STAKING SUPPLEMENTAL CONTROL (PROJECT) 01. 1643-05-75	LS	1.000	1.000
1510	650.9920	CONSTRUCTION STAKING SLOPE STAKES	LF	1,000.000	1,000.000
1520	690.0150	SAWING ASPHALT	LF	440.000	440.000
1530	715.0502	INCENTIVE STRENGTH CONCRETE STRUCTURES	DOL	1,956.000	1,956.000
1540	SPV.0060	SPECIAL 01. WEIR PLATES	EACH	36.000	36.000
1550	SPV.0060	SPECIAL 02. MASONRY ANCHORS TYPE S 3/8-INCH	EACH	144.000	144.000
1560	SPV.0060	SPECIAL 03. SAFETY GRATE SPECIAL	EACH	1.000	1.000
1570	SPV.0090	SPECIAL 01. CONCRETE CRACK SEALING	LF	9.000	9.000

****
*** TOTAL ITEMS WITH LUMP SUM TOTALS ACROSS ALL PROJECTS NOT EQUAL TO ONE => 1
****

CLEARING AND GRUBBING

STATION	-	STATION	LOCATION	ITEM NO. 201.0105 CLEARING STA	ITEM NO. 201.021 GRUBBING STA
179+50	-	187+50	LT (ROCK EXCAVATION AREA)	8	8
183+00	-	184+00	RIPRAP AT BOTH ENDWALLS	1	1
TOTAL				9	9

REMOVING SMALL CULVERT PIPES, ITEM NO. 203.0100

STATION	SIZE - DESCRIPTION	EACH
84+85	42" CMCP	1
165+10 - 165+70, LT	18" CMCP	1
165+70	24" CMCP	1
170+00 RT - 171+50 LT	24" CMCP	1
210+40 CTH Z	24" CMCP	1
211+05 CTH Z	24" CMCP	1
211+75 CTH Z	18" CMCP	1
212+45 CTH Z	18" CMCP	1
TOTAL		8

REMOVING OLD STRUCTURES STA. XXXX, ITEM NO. 203.0200

STATION	DESCRIPTION	LS
74+75, LT	72" STONE HEADWALL	1
120+70	TWO 42" HEADWALLS	1
177+10, RT	3' X 3' CONCRETE HEADWALL	1
210+90	TWO 42" HEADWALLS	1
251+35	72" STONE HEADWALL	1
266+20	TWO 72" STONE HEADWALLS	1
277+80	72" CMCP CATTLE PASS WITH HEADWALLS	1
TOTAL		7

MILL AND RELAY, ITEM NO. 330.0100

STATION	-	STATION	ROADWAY	SY
19+50	-	35+00	USH 14 - 2 LANE SECTION	5170
35+00	-	65+00	USH 14 - 2 LANE SECTION	10000
65+00	-	95+00	USH 14 - 2 LANE SECTION	10000
95+00	-	117+00	USH 14 - 2 LANE SECTION	7330
117+00	-	125+00	USH 14 - 4 LANE SECTION	5335
125+00	-	155+00	USH 14 - 4 LANE SECTION	20000
155+00	-	185+00	USH 14 - 4 LANE SECTION	20000
185+00	-	206+80	USH 14 - 4 LANE SECTION	14535
206+80	-	221+10	USH 14 - EB ONLY	4770
221+10	-	225+00	USH 14 - 4 LANE SECTION	3270
225+00		245+00	USH 14 - 2 LANE SECTION	6670
245+00	-	275+00	USH 14 - 2 LANE SECTION	10000
275+00	-	305+00	USH 14 - 2 LANE SECTION	10000
305+00	-	335+00	USH 14 - 2 LANE SECTION	10000
335+00	-	340+00	USH 14 - 2 LANE SECTION	1670
SIDEROADS			3 INTERSECTIONS	1250
TOTAL				140000

MAINLINE REMOVALS BASED UPON 30' WIDTH - 24' ROADWAY AND 3' SHOULDERS AND 60' WIDTH - TWO 24' ROADWAYS WITH 3' SHOULDERS IN DIVIDED SESCTION SIDEROADS WITH CROSS SECTIONS CONSIDERED AS RECONSTRUCT AND NOT MILLED.

REMOVING CURB AND GUTTER, ITEM NO. 240.0150

LOCATION	DESCRIPTION	SY
CTH Z	SW QUADRANT	90
CTH Z	SE QUADRANT	65
BUCKHORN	NW QUADRANT	55
BUCKNORH	NE QUADRANT	85
PIER SPRINGS	SW QUADRANT	90
PIER SPRINGS	SE QUADRANT	80
SALOUTUS LANE	SW QUADRANT	85
SALOUTUS LANE	SE QUADRANT	80
SPRING VALLEY ROAD	SW QUADRANT	85
SPRING VALLEY ROAD	SE QUADRANT	55
COVERED BRIDGE ROAD	NW QUADRANT	55
COVERED BRIDGE ROAD	NE QUADRANT	65
TOTAL		890

REMOVING ASPHALTIC SURFACE BUTT JOINTS, ITEM NO. 204.0115

LOCATION	DESCRIPTION	SY
19+50	WEST PROJECT LIMIT	200
340+00	EAST PROJECT LIMIT	200
SIDEROADS	7 LOCATIONS	900
TOTAL		1300

SELECT CRUSHED MATERIAL, ITEM NO. 312.0110

DESCRIPTION	LOCATION	TONS
EBS LOCATIONS	UNDISTRIBUTED	3250

BASE AGGREGATE DENSE 3/4-INCH, ITEM NO. 305.0110 AND BASE AGGREGATE DENSE 1 1/4-INCH, ITEM NO. 305.0120

STATION	-	STATION	DESCRIPTION	ITEM NO. 305.0110 3/4-INCH TON	ITEM NO. 305.0120 1 1/4-INCH TON
19+50	-	35+00	4' EACH SIDE	365	---
35+00	-	65+00	4' EACH SIDE	725	---
65+00	-	95+00	4' EACH SIDE	725	---
95+00	-	121+00	4' EACH SIDE	620	---
121+00	-	125+00	3' INSIDE, 2' OUTSIDE	145	---
125+00	-	155+00	3' INSIDE, 2' OUTSIDE	875	---
155+00	-	185+00	3' INSIDE, 2' OUTSIDE	880	---
185+00	-	207+00	3' INSIDE, 2' OUTSIDE	650	---
207+00	-	221+00	3' INSIDE, 2' OUTSIDE	500	4800
221+00	-	223+00	3' INSIDE, 2' OUTSIDE	80	---
223+00		245+00	4' EACH SIDE	515	---
245+00	-	275+00	4' EACH SIDE	725	---
275+00	-	305+00	4' EACH SIDE	725	---
305+00	-	335+00	4' EACH SIDE	725	---
335+00	-	340+00	4' EACH SIDE	120	---
TURN LANES			CTH Z, CTH ZZ, AND COVERED BRDIGE RD	---	1000
SIDEROADS			3' EACH SIDE	125	1200
EBS LOCATIONS			UNDISTRIBUTED	---	2025
TOTAL				8500	9025

GRADING SHAPING & FINISHING INTERSECTION, ITEM NO. 205.9015.S.XX

ITEM NO.	INTERSECTION	LUMP SUM	QUANTITIES BELOW ARE FOR INFORMATION ONLY AND ARE NOT PAY ITEMS: BORROW EXCAVATION CY	TOPSOIL SY	MULCH SY	FERTILIZER TYPE B CWT	SEED MIXTURE NO. 20 LBS
205.9015.S.01	PIER SPRING ROAD	1	40	165	165	0.1	4.5
205.9015.S.02	SALUTOUS ROAD	1	35	150	150	0.1	4.0
205.9015.S.03	SPRING VALLEY ROAD	1	35	235	235	0.15	6.3
205.9015.S.04	COVERED BRIDGE ROAD	1	50	90	90	0.05	2.4

ASPHALTIC SURFACE DRIVEWAYS AND FIELD ENTRANCES ITEM NO. 465.0120

STATION	LOCATION	TONS
65+00	LT	7
74+18	LT	8
76+10	LT	8
122+77	RT	6
190+01	LT	8
254+00	RT	8
256+93	RT	8
338+79	RT	8
339+90	LT	3
339+94	RT	6
68+00 - 71+00, LT	HISTORICAL MARKER AREA	200
TOTAL		270

RUBBLIZING, ITEM NO. 335.0100

STATION	-	STATION	SY
19+50	-	35+00	4480
35+00	-	65+00	8670
65+00	-	95+00	8670
95+00	-	117+00	7520
117+00	-	125+00	4625
125+00	-	155+00	17335
155+00	-	185+00	17335
185+00	-	207+00	12715
207+00	-	221+00	4050
221+00	-	225+00	2315
225+00		245+00	5780
245+00	-	275+00	8670
275+00	-	305+00	8670
305+00	-	335+00	8670
335+00	-	340+00	1445
SIDEROADS			
TOTAL			120950

SHAPING SHOULDERS, ITEM NO. 305.0500

STATION	-	STATION	DESCRIPTION	STA
19+50	-	35+00	2 SHOULDERS	16
35+00	-	65+00	2 SHOULDERS	60
65+00	-	95+00	2 SHOULDERS	60
95+00	-	121+00	2 SHOULDERS	52
121+00	-	125+00	4 SHOULDERS	16
125+00	-	155+00	4 SHOULDERS	120
155+00	-	185+00	4 SHOULDERS	120
185+00	-	207+00	4 SHOULDERS	44
207+00	-	221+00	2 SHOULDERS	28
221+00	-	223+00	4 SHOULDERS	8
223+00		245+00	2 SHOULDERS	44
245+00	-	275+00	2 SHOULDERS	60
275+00	-	305+00	2 SHOULDERS	60
305+00	-	335+00	2 SHOULDERS	60
335+00	-	340+00	2 SHOULDERS	10
SIDEROADS			3 INTERSECTIONS	12
TOTAL				770

TACK COAT, ITEM NO. 455.0605

STATION	-	STATION	ROADWAY	0.025 GAL/SY GAL
19+50	-	35+00	USH 14	260
35+00	-	65+00	USH 14	500
65+00	-	95+00	USH 14	500
95+00	-	117+00	USH 14	365
117+00	-	125+00	USH 14	265
125+00	-	155+00	USH 14	1000
155+00	-	185+00	USH 14	1000
185+00	-	206+80	USH 14	725
206+80	-	221+10	USH 14	240
221+10	-	225+00	USH 14	165
225+00		245+00	USH 14	335
245+00	-	275+00	USH 14	500
275+00	-	305+00	USH 14	500
305+00	-	335+00	USH 14	500
335+00	-	340+00	USH 14	100
SIDEROADS				145
TOTAL				7100

EARTHWORK SUMMARY

DIVISION	CAT	FROM/TO STATION	LOCATION	EXCAVATION COMMON (NOTE 1) (ITEM #205.0100) CUT (NOTE 2)	SALVAGED / UNUSEABLE PAVEMENT MATERIAL (NOTE 3)	AVAILABLE MATERIAL (NOTE 4)	Rock Excavation (NOTE 5) (Item #205.0200)	Expanded Rock (NOTE 6) Factor 1.10	UNEXPANDED FILL (NOTE 7)	EXPANDED FILL (NOTE 8) FACTOR 1.25	MASS ORDINATE +/- (NOTE 9)	WASTE	BORROW (ITEM #208.0100) (NOTE 10) FACTOR 1.15
2767-03-70													
1	0010	32+23 - 36+50	USH 14	147	0	147	0	0	631	789	-642	--	591
2	0010	163+52 - 168+27	USH 14	203	0	203	0	0	266	333	-130	--	119
3	0011	EB 161+86 - EB 166+81	USH 14	2,272	0	2,272	0	0	184	229	2,043	2,043	
4	0010	179+50 - 186+75	USH 14	81	0	81	4,835	5,319	67	-6,564	6,645	6,645	--
5	0010	206+80 - 221+10	USH 14	3,483	1,325	2,158	0	0	2,756	3,445	-1,287	--	1,184
6	0010	309+66 - 314+40	USH 14	161	0	161	0	0	232	290	-128	--	118
7	0010	120+50 - 122+20	CTH Z	82	40	42	0	0	363	453	-411	--	378
8	0010	210+00 - 213+47	CTH ZZ	566	50	516	0	0	23	29	487	487	--
9	0010	221+60 - 223+79	TUCK-A-WAY	256	50	206	0	0	454	567	-361	--	332
10	0010	310+50 - 311+60	BUCKHORN DRIVE	104	30	104	0	0	6	8	96	96	--
11	0010	EBS LOCATIONS	UNDISTRIBUTED	3,500	0	0	0	0	0	0	0	3,500	--
TOTALS				10,856	1,495	5,891	4,835	5,319	4,981	-422		12,772	2,723

1) EBS IS NOT INCLUDED IN DIVISIONS 1 THROUGH 10. 2% OF THE PROJECT LENGTH WAS INCLUDED FOR EBS QUANTITIES IN DIVISION 11 AND IS PAID FOR AS COMMON EXCAVATION. ITEM NUMBER 205.0100
2) SALVAGED/UNSUABLE PAVEMENT MATERIAL IS INCLUDED IN CUT
3) SALVAGED/UNUSABLE PAVEMENT MATERIAL EQUALS AREA OF PROJECT PAVEMENT REMOVAL * TYPICAL EXISTING PAVEMENT DEPTH
4) AVAILABLE MATERIAL = CUT - SALVAGED/UNUSUABLE PAVEMENT MATERIAL
5) ROCK EXCAVATION PAID UNDER ITEM NUMBER 205.0200
6) EXPANDED ROCK FACTOR = 1.1
7) UNEXPANDED FILL IS A SUM OF CROSS SECTION AREAS FROM EACH DIVISIONAL SHEET
8) EXPANDED FILL FACTOR = 1.25, EXPANDED FILL = (UNEXPANDED FILL-ROCK*ROCK FACTOR) * FILL FACTOR
9) THE MASS ORDINATE + OR - QTY CALCULATED FOR THE DIVISION. PLUS QUANTITY INDICATES AN EXCESS OF MATERIAL WITHIN THE DIVISION. MINUS INDICATES A SHORTAGE OF MATERIAL WITHIN THE DIVISION.
10) BORROW = (ABSOLUTE VALUE OF MASS ORDINATE / EXPANDED FILL FACTOR) * BORROW FACTOR

HMA PAVEMENT TYPE E-3, ITEM NO. 460.1103 AND ASPHALTIC MATERIAL PG58-28, ITEM NO. 455.0105

STATION	-	STATION	DESCRIPTION	HMA PAVEMENT TYPE E-3 TONS	ASPHALTIC MATERIAL PG58-28 TONS
19+50	-	35+00	USH 14	1560	85
35+00	-	65+00	USH 14	2900	160
65+00	-	95+00	USH 14	3000	165
95+00	-	121+00	USH 14	2800	155
121+00	-	125+00	USH 14	800	45
125+00	-	155+00	USH 14	5850	320
155+00	-	185+00	USH 14	5950	330
185+00	-	215+00	USH 14	5900	325
215+00	-	223+00	USH 14	1620	90
223+00		245+00	USH 14	2260	125
245+00	-	275+00	USH 14	2850	155
275+00	-	305+00	USH 14	2850	155
305+00	-	335+00	USH 14	2950	165
335+00	-	340+00	USH 14	550	30
			CTH Z	375	20
			CTH ZZ	250	15
			TUCKAWAY VALLEY	340	20
			BUCKHORN	200	11
			PIER SPRING	160	9
			SALOUTUS	155	9
			SPRING VALLEY	155	9
			COVERED BRIDGE	200	11
TOTAL				43675	2409

ASPHALTIC SHOULDER RUMBLE STRIP, ITEM NO. 465.0400

STATION	-	STATION	DESCRIPTION	LF
19+50	-	35+00	USH 14	3300
35+00	-	65+00	USH 14	5800
65+00	-	95+00	USH 14	6000
95+00	-	121+00	USH 14	5200
121+00	-	125+00	USH 14	1600
125+00	-	155+00	USH 14	12000
155+00	-	185+00	USH 14	12000
185+00	-	215+00	USH 14	12000
215+00	-	223+00	USH 14	3200
223+00		245+00	USH 14	4400
245+00	-	275+00	USH 14	6000
275+00	-	305+00	USH 14	6000
305+00	-	335+00	USH 14	6000
335+00	-	340+00	USH 14	1000
			CTH Z	250
			CTH ZZ	275
			TUCKAWAY VALLEY	460
TOTAL				85485

ASPHALTIC FLUMES ITEM NO. 465.0315 AND SOD LAWN, ITEM NO. 631.1000

STATION STATION	LOCATION	ASPHALTIC FLUMES SY	SOD LAWN SY
33+23, LT	CTH Z	13	6
34+35, LT	CTH Z	7	6
34+82, LT	CTH Z	15	6
164+50, LT	CTH ZZ	8	6
165+78, LT	CTH ZZ	7	6
EB 165+80, RT	CTH ZZ	10	6
220+57, RT	TUCK-A-WAY	12	6
222+88, LT	TUCK-A-WAY	10	6
215+01, LT	TUCK-A-WAY	12	6
215+15, RT	TUCK-A-WAY	11	6
229+15, LT	BUCKHORN	11	6
310+78, RT	BUCKHORN	14	6
230+41, LT	BUCKHORN	10	6
242+29, RT	PIER SPRING	9	6
321+62, LT	PIER SPRING	10	6
321+80, RT	PIER SPRING	9	6
243+47, RT	PIER SPRING	15	6
251+32, RT	SALOUTUS	11	6
252_52, RT	SALOUTUS	12	6
351+41, LT	SPRING VALLEY	7	6
302+59, RT	SPRING VALLEY	14	6
360+76, LT	COVERED BRIDGE	4	6
360+76, RT	COVERED BRIDGE	4	6
TOTAL		235	138

CULVERT PIPE CLASS III AND APRON ENDWALLS FOR CULVERT PIPE

STATION	LOCATION	ITEM NO. 520.0118	ITEM NO. 520.0124	ITEM NO. 520.0142	ITEM NO. 520.0148	ITEM NO. 520.1018	ITEM NO. 520.1024	ITEM NO. 520.1042	ITEM NO. 520.1048
		CULVERT PIPE CLASS III				APRON ENDWALLS FOR CULVERT PIPE			
		18" LF	24" LF	42" LF	48" LF	18" EACH	24" EAH	42" EACH	48" EACH
84+60 RT - 85+19 LT	CROSS CULVERT	---	---	96	---	---	---	2	---
164+43 RT - 164+50, LT	CROSS CULVERT	75	---	---	---	---	---	---	---
164+50 LT - 165+80, LT	CROSS CULVERT	---	127	---	---	---	---	---	---
165+80 LT - 165+90, RT	CROSS CULVERT	---	155	---	---	---	1	---	---
164+80 RT- 165+80 RT	CROSS CULVERT	95	---	---	---	2	---	---	---
165+00 RT - 165_80 RT	CROSS CULVERT	85	---	---	---	2	---	---	---
170+00 RT - 171+50 LT	CROSS CULVERT	---	202	---	---	---	1	---	---
277+80	CROSS CULVERT	---	---	---	146	---	---	---	2
TOTAL		255	484	96	146	4	2	2	2

MIMIMUM PIPE WALL THICKNESS (INCHES)

MATERIAL	18"	24"	42"	48"
STEEL	0.064	0.064	0.109	0.109
ALUMINUM	0.060	0.075	0.105	0.105

CULVERT PIPE CORRUGATED STEEL AND APRON ENDWALLS FOR CULVERT PIPE STEEL

STATION	LOCATION	ITEM NO. 521.0118	ITEM NO. 521.0124	ITEM NO. 521.0130	ITEM NO. 521.0136	ITEM NO. 521.0172	ITEM NO. 521.1018	ITEM NO. 521.1024	ITEM NO. 521.1030	ITEM NO. 521.1036	ITEM NO. 521.1072
		CULVERT PIPE CORRUGATED STEEL					APRON ENDWALLS FOR CULVERT PIPE STEEL				
		18" LF	24" LF	30" LF	36" LF	72" LF	18" EACH	24" EAH	30" EACH	36" EACH	72" EACH
74+75	LT	---	---	---	---	5	---	---	---	---	1
126+00	MEDIAN	26	---	---	---	---	2	---	---	---	---
127+98	LT	---	---	---	---	---	1	---	---	---	---
154+00	LT	---	---	---	5	---	---	---	---	1	---
156+95	RT	5	---	---	---	---	1	---	---	---	---
171+60	WB LT	---	5	---	---	---	---	1	---	---	---
195+15	WB LT	---	5	---	---	---	---	1	---	---	---
210+90	EB RT AND LT	---	---	---	---	---	---	---	---	---	---
215+00	WB RT	---	24	---	---	---	---	1	---	---	---
232+20	RT	---	---	5	---	---	---	---	1	---	---
251+35	LT	---	---	---	---	10	---	---	---	---	1
266+20	LT AND RT	---	---	---	---	---	---	---	---	---	2
TOTAL		31	34	5	5	15	4	3	1	1	4

MIMIMUM PIPE WALL THICKNESS (INCHES)

MATERIAL	18"	24"	30"	36"	72"
STEEL	0.064	0.064	0.079	0.079	0.138

CULVERT PIPE REINFORCED CONCRETE CLASS III AND APRON ENDWALLS FOR CULVERT PIPE REINFORCED CONCRETE

STATION	LOCATION	ITEM NO. 522.0124	ITEM NO. 522.0136	ITEM NO. 522.1024	ITEM NO. 522.1036	ITEM NO. 522.1042
		CULVERT PIPE REINFORCED CONCRETE CLASS III		APRON ENDWALLS FOR CULVERT PIPE REINFORCED CONCRETE		
		24" LF	36" LF	24" EACH	36" EACH	42" EACH
121+70	LT AND RT	---	---	---	---	2
177+10	WB LT	---	5	---	1	---
198+60	WB LT	5	---	1	---	---
204+95	WB LT	5	---	1	---	---
TOTAL		10	5	2	1	2

RIPRAP MEDIUM, ITEM NO. 606.0200 AND GEOTEXTILE FABRIC TYPE HR, ITEM NO. 645.0120

STATION	LOCATION	TYPE HR SY	RIPRAP CY
84+50	RT	10	3.3
121+75	LT	10	3.3
125+50	MEDIAN	8	2.7
126+50	MEDIAN	8	2.7
127+90	LT	8	2.7
154+00	LT	9	3
157+00	RT	8	2.7
165+80	RT	8	2.7
177+10	WB LT	9	3
183+50	RT	10	3.3
183+80	LT	10	3.3
257+80	LT	10	3.3
TOTAL		108	36

CONCRETE SURFACE DRAINS, ITEM NO. 416.1010

STATION	LOCATION	CY
EB 164+84, RT	CTH ZZ	1
TOTAL		1

CONCRETE CURB AND GUTTER 6-INCH SLOPED 36-INCH TYPE D, ITEM NO. 601.0557

LOCATION	DESCRIPTION	LF
CTH Z	SW QUADRANT	93
CTH Z	SE QUADRANT	126
CTH ZZ	SW QUADRANT	81
CTH ZZ	SE QUADRANT	66
CTH ZZ	NW QUADRANT	66
CTH ZZ	NE QUADRANT	63
TUCKAWAY VALLEY RD	SW QUADRANT	99
TUCKAWAY VALLEY RD	SE QUADRANT	57
TUCKAWAY VALLEY RD	MIDDLE WEST	55
TUCKAWAY VALLEY RD	MIDDLE EAST	83
TUCKAWAY VALLEY RD	NW QUADRANT	66
TUCKAWAY VALLEY RD	NE QUADRANT	82
BUCKHORN	NW QUADRANT	70
BUCKNORH	NE QUADRANT	96
PIER SPRINGS	SW QUADRANT	92
PIER SPRINGS	SE QUADRANT	63
SALOUTUS LANE	SW QUADRANT	91
SALOUTUS LANE	SE QUADRANT	64
SPRING VALLEY ROAD	SW QUADRANT	89
SPRING VALLEY ROAD	SE QUADRANT	76
COVERED BRIDGE ROAD	NW QUADRANT	77
COVERED BRIDGE ROAD	NE QUADRANT	95
TOTAL		1750

MARKERS CULVERT END, ITEM NO. 633.5200

STATION	LOCATION	EACH
74+75	LT	2
84+60 RT - 85+19 LT	CROSS CULVERT	2
121+70	LT AND RT	2
126+00	MEDIAN	2
127+98	LT	1
154+00	LT	1
156+95	RT	1
165+80 LT - 165+90, RT	CROSS CULVERT	1
164+80 RT- 165+80 RT	CROSS CULVERT	2
165+00 RT - 165_80 RT	CROSS CULVERT	2
170+00 RT - 171+50 LT	CROSS CULVERT	2
171+60	WB LT	1
177+10	WB LT	1
195+15	WB LT	1
198+60	WB LT	1
204+95	WB LT	1
210+90	EB RT AND LT	2
215+00	WB RT	1
232+20	RT	1
251+35	LT	1
266+20	LT AND RT	2
277+80	CROSS CULVERT	2
TOTAL		32

INLETS MEDIAN 1 GRATE ITEM NO. 611.0305 AND INLET COVERS TYPE MS, ITEM NO. 611.0642

STATION	LOCATION	ITEM NO. 611.0305 INLETS MEDIAN 1 GRATE EACH	ITEM NO. 611.0642 INLET COVERS TYPE MS EACH
164+43, LT	MEDIAN	1	1
164+50	LT	1	1
165+80	LT	1	1
TOTAL		3	3

CONCRETE COLLARS FOR PIPE, ITEM NO. 520.8000

STATION	LOCATION	EACH
121+70	LT AND RT	2
177+10	WB LT	1
195+15	WB LT	1
198+60	WB LT	1
204+95	WB LT	1
TOTAL		6

EROSION CONTROL ITEMS

LOCATION	COMMENTS	ITEM NO. 625.0100 TOPSOIL SY	ITEM NO. 627.0200 MULCHING SY	ITEM NO. 628.1504 SILT FENCE LF	ITEM NO. 628.1420 SILT FENCE MAINTENANCE LF	ITEM NO. 628.7015 INLET PROTECTION TYPE D EACH	ITEM NO. 629.0210 FERTILIZER TYPE B CWT	ITEM NO. 630.0120 SEEDING MIXTURE NO. 20 LB	ITEM NO. 628.7555 CULVERT PIPE CHECKS EACH
22+25, RT		---	---	---	---	---	---	---	5
32+00 - 37+00	INCLUDES CTH Z	2400	2400	1440	1440	---	150	65	---
48+25, LT		---	---	---	---	---	---	---	5
58+90, LT		---	---	---	---	---	---	---	5
62+80, LT		---	---	---	---	---	---	---	5
67+25, LT		---	---	---	---	---	---	---	5
72+25, LT		---	---	---	---	---	---	---	5
85+15, LT		---	---	---	---	---	---	---	5
92+20, LT		---	---	---	---	---	---	---	5
96+75, LT		---	---	---	---	---	---	---	5
106+75 - 109+75	AT GUARDRAIL	1000	1000	350	350	---	65	28	---
112+25 - 115+25	AT GUARDRAIL	650	650	280	280	---	42	18	---
121+50 - 123+50	MEDIAN AND GUARDRAIL	200	200	200	200	1	14	6	5
125+70, LT	MEDIAN	---	---	---	---	---	---	---	5
142+00 - 146+00, LT	WB GUARDRAIL	450	450	400	400	---	28	12	---
142+00 - 155+00	EB GUARDRAIL	1250	1250	1300	1300	1	80	34	---
151+25, LT		---	---	---	---	1	---	---	---
154+00, LT		---	---	---	---	---	---	---	5
156+90, LT	MEDIAN	---	---	---	---	---	---	---	5
163+00 - 168+00	CTH ZZ	1350	1350	1050	1050	3	86	37	25
169+00 - 175+00	EB GUARDRAIL	350	350	600	600	---	23	10	---
170+00, RT		---	---	---	---	---	---	---	5
171+60, LT		---	---	---	---	---	---	---	5
172+60, LT	MEDIAN	---	---	---	---	---	---	---	5
174+50 - 181+20, RT	WB GUARDRAIL	400	400	670	670	---	26	11	---
177+00 - 179+00, LT	WB GUARDRAIL	150	150	200	200	---	9	4	5
177+50 - 190+00, LT	EB GUARDRAIL	700	700	1250	1250	---	47	20	---
182+50, LT		---	---	---	---	---	---	---	5
187+50 - 189+50, RT	EB GUARDRAIL	150	150	200	200	---	9	4	5
184+25 - 193+00, RT	WB GUARDRAIL	475	475	875	875	---	30	13	5
195+25, LT	WB	---	---	---	---	---	---	---	5
195+50, RT	EB	---	---	---	---	---	---	---	5
198+00, RT	EB	---	---	---	---	---	---	---	5
198+60, LT	WB	---	---	---	---	---	---	---	5
204+00, RT	EB	---	---	---	---	---	---	---	5
204+90, LT	WB	---	---	---	---	---	---	---	5
207+00 - 221+00		10000	10000	3900	3900	---	630	270	15
228+00 - 231+00, LT	BUCKHORN	300	300	550	550	---	19	8	---
237+25 - 244+50	GUARDRAIL AND PIER SPRING RD	675	675	1200	1200	---	44	19	10
249+50 - 253+50	GUARDRAIL AND SALOUTUS LN	250	250	350	350	---	19	8	5
259+05, RT		---	---	---	---	---	---	---	5
264+00 - 268+25	GUARDRAIL LT AND RT	375	375	650	650	---	26	11	5
277+75, LT		---	---	---	---	---	---	---	5
292+25, RT		---	---	---	---	---	---	---	5
300+50 - 304+25	GUARDRAIL AND SPRING VALLEY	375	375	700	700	---	26	11	5
309+50 - 314+50	GUARDRAIL AND COVERED BRIDGE	375	375	550	550	---	26	11	5
325+20, LT		---	---	---	---	---	---	---	5
330+10, LT		---	---	---	---	---	---	---	5
UNDISTRIBUTED		2125	2125	1585	1585	---	141	60	25
TOTAL		**24000**	**24000**	**18300**	**18300**	**6**	**1540**	**660**	**250**

CONSTRUCTION STAKING

STATION	-	STATION	ROADWAY	ITEM NO. 650.4500 SUBGRADE LF	ITEM NO. 650.5000 BASE LF	ITEM NO. 650.5500 CURB GUTTER AND CURB AND GUTTER LF	ITEM NO. 650.6000 PIPE CULVERTS EACH	ITEM NO. 650.8000 RESURFACING REFERENCE LF	ITEM NO. 650.9920 SLOPE STAKES LF
19+50	-	35+00	USH 14	---	---	219	---	1550	---
35+00	-	65+00	USH 14	---	---	---	---	3000	---
65+00	-	95+00	USH 14	---	---	---	3	3000	---
95+00	-	117+00	USH 14	---	---	---	---	2200	---
117+00	-	125+00	USH 14	---	---	---	2	1600	---
125+00	-	155+00	USH 14	---	---	---	4	6000	---
155+00	-	185+00	USH 14	---	---	276	10	6000	---
185+00	-	207+00	USH 14	---	---	442	3	4400	---
207+00	-	221+00	USH 14	1400	1400	---	3	1400	1000
221+00	-	225+00	USH 14	---	---	321	---	800	---
225+00	-	245+00	USH 14	---	---	---	1	2000	---
245+00	-	275+00	USH 14	---	---	155	3	3000	---
275+00	-	305+00	USH 14	---	---	165	2	3000	---
305+00	-	335+00	USH 14	---	---	172	---	3000	---
335+00	-	340+00	USH 14	---	---	---	---	400	---
TOTAL				1400	1400	1750	31	41350	1000

TRAFFIC CONTROL ITEMS

STAGE	DESCRIPTION	DAYS IN SERVICE	ITEM NO. 643.0300 TRAFFIC CONTROL DRUMS NO.	ITEM NO. 643.0300 TRAFFIC CONTROL DRUMS DAYS	ITEM NO. 643.0420 TRAFFIC CONTROL BARRICADES TYPE III NO.	ITEM NO. 643.0420 TRAFFIC CONTROL BARRICADES TYPE III DAYS	ITEM NO. 643.0420 TRAFFIC CONTROL SIGNS NO.	ITEM NO. 643.0420 TRAFFIC CONTROL SIGNS DAYS	ITEM NO. 643.0705 TRAFFIC CONTROL WARNING LIGHTS TYPE A NO.	ITEM NO. 643.0705 TRAFFIC CONTROL WARNING LIGHTS TYPE A DAYS	ITEM NO. 643.0715 TRAFFIC CONTROL WARNING LIGHTS TYPE C NO.	ITEM NO. 643.0715 TRAFFIC CONTROL WARNING LIGHTS TYPE C DAYS
STAGE 1												
	ADVANCED SIGNING MAINLINE	50	0	0	0	0	10	500	0	0	0	0
	ADVANCED SIGNING SIDEROADS	50	0	0	0	0	90	4500	0	0	0	0
	GUARDRAIL WORK ZONE	50	100	5000	4	200	2	100	5	250	30	1500
	STRUCTURE WORK ZONE	50	12	600	2	100		0	0	0	15	750
STAGE 2												
	ADVANCED SIGNING MAINLINE	40	0	0	0	0	10	400	0	0	0	0
	ADVANCED SIGNING SIDEROADS	40	0	0	0	0	90	3600	0	0	0	0
	USH 14	40	100	4000	6	240	12	480	8	320	30	1200
	CTH ZZ	40	10	400	4	160	12	480	5	200	15	600
	TUCKAWAY	40	20	800	8	320	6	240	10	400	15	600
STAGE 3												
	ADVANCED SIGNING MAINLINE	90	0	0	0	0	10	900	0	0	0	0
	ADVANCED SIGNING SIDEROADS	90	0	0	0	0	90	8100	0	0	0	0
	USH 14	90	40	3600	6	540	12	1080	8	720	30	2700
	CTH Z	10	15	150	2	20	6	60	3	30	8	80
	CTH ZZ	10	25	250	2	20	12	120	3	30	8	80
	TUCKAWAY	15	15	225	4	60	6	90	5	75	16	240
	BUCKHORN	5	15	75	2	10	6	30	3	15	8	40
	PIER SPRING	5	15	75	2	10	6	30	3	15	8	40
	SALOUTUS	5	15	75	2	10	6	30	3	15	8	40
	SPRING VALLEY	5	15	75	2	10	6	30	3	15	8	40
	COVERED BRIDGE	5	15	75	2	10	6	30	3	15	8	40
UNDISTRIBUTED				100		90		200		100		150
PROJECT TOTALS				**15500**		**1800**		**21000**		**2200**		**8100**

PAVEMENT MARKING EPOXY

FROM	TO	SECTION DESCRIPTION	ITEM NO. 646.0106 PAVEMENT MARKING EPOXY 4-INCH WHITE L.F.	ITEM NO. 646.0106 PAVEMENT MARKING EPOXY 4-INCH WHITE SKIPS L.F.	ITEM NO. 646.0406 PAVEMENT MARKING SAME DAY EPOXY 4-INCH YELLOW L.F.	ITEM NO. 646.0406 PAVEMENT MARKING SAME DAY EPOXY 4-INCH YELLOW SKIPS L.F.	ITEM NO. 646.0126 PAVEMENT MARKING EPOXY 8-INCH WHITE L.F.	ITEM NO. 647.0566 PAVEMENT MARKING STOP LINE EPOXY 18-INCH WHITE L.F.	ITEM NO. 647.0736 PAVEMENT MARKING DIAGONAL EPOXY 18-INCH YELLOW L.F.	ITEM NO. 649.0100 TEMPORARY PAVEMENT MARKING 4-INCH YELLOW L.F.
19+50	40+00	2-LANE, NO PASSING	4200	---	4200	---	---	---	---	488
40+00	51+00	2-LANE, NO PASSING WB	2200	---	1100	275	---	---	---	275
51+00	110+00	2-LANE WITH PASSING	11800	---	---	2950	---	---	---	2950
110+00	121+50	DEVELOPING 4-LANE SECITON	2300	---	6900	---	---	---	210	575
121+50	223+50	4-LANE DIVIDED SECTION	20400	5100	20400	---	950	---	---	5100
223+50	227+00	MERGING TO 2 LANE SECTION	700	---	2100	---	---	---	250	350
227+00	235+50	2-LANE, NO PASSING	1700	---	1700	---	---	---	---	213
235+50	262+50	2-LANE WITH PASSING	5400	---	---	675	---	---	---	675
262+50	277+00	2-LANE, NO PASSING EB	2900	---	1450	363	---	---	---	365
277+00	288+00	2-LANE, NO PASSING	2200	---	2200	---	---	---	---	275
288+00	296+00	2-LANE, NO PASSING WB	1600	---	800	200	---	---	---	200
296+00	340+00	2-LANE WITH PASSING	8800	---	---	1100	---	---	---	1100
CTH Z		---	250	---	350	---	---	20	---	---
CTH ZZ		---	275	---	420	---	---	50	---	---
TUCKAWAY VALLEY		INCLUDES MEDIAN SPLIT	460	---	550	---	---	75	---	---
BUCKHORN		---	160	---	245	---	---	50	---	---
PIER SPRING		---	40	---	125	---	---	25	---	---
SALOUTUS		---	50	---	150	---	---	25	---	---
SPRING VALLEY		---	90	---	182	---	---	25	---	---
COVERED BRIDGE		---	---	---	100	---	---	30	---	---
SUBTOTALS			65525	5100	42972	5563	950	300	460	12565
TOTALS			**70625**		**48535**		**950**	**300**	**460**	**12565**

SAWING ASPHALT, ITEM NO. 690.0150

STATION	LOCATION	LF
19+50	PROJECT LIMIT	30
340+00	PROJECT LIMIT	30
CTH Z	PROJECT LIMIT	24
CTH ZZ	NORTH PROJECT LIMIT	24
CTH ZZ	SOUTH PROJECT LIMIT	24
TUCKAWAY VALLEY	PROJECT LIMIT	24
BUCKHORN	PROJECT LIMIT	24
PIER SPRING	PROJECT LIMIT	24
SALOUTUS	PROJECT LIMIT	24
SPRING VALLEY	PROJECT LIMIT	24
COVERED BRIDGE	PROJECT LIMIT	24
DRIVEWAYS	10 LOCATIONS	164
TOTAL		440

TRAFFIC CONTROL FLEXIBLE TUBULAR MARKER POSTS, ITEM NO. 643.0500 AND TRAFFIC CONTROL FLEXIBLE TUBULAR MARKER BASES, ITEM NO. 643.0600

STAGE	LOCATION	POSTS EACH	BASES EACH
2	EB 115+00 - EB 225+00	110	110
3	115+00 - 225+00	110	110
TOTALS		220	220

PERMANENT SIGNING, MOVING SIGNS AND SMALL SIGN SUPPORTS AND REMOVING SIGNS AND SIGN SUPPORTS

SIGN NO.	STATION	OFFSET	CODE	ITEM NO. 638.2102 MOVING SIGNS TYPE II EACH	ITEM NO. 638.4000 MOVING SMALL SIGN SUPPORTS EACH	ITEM NO. 638.2602 REMOVING SIGNS TYPE II EACH	ITEM NO. 638.3000 REMOVING SMALL SIGN SUPPORTS EACH	SIZE WIDTH IN	X	SIZE HEIGHT IN	ITEM NO. 637.0202 SIGNS TYPE 2 REFLECTIVE SF	WOOD POSTS 4" X 6" ITEM NO. 634.0614 14-FT EACH	WOOD POSTS 4" X 6" ITEM NO. 634.0616 16-FT EACH	REMARKS
1-1	20+90	LT	W1-2R	---	---	1	1	---	X	---	---	---	---	NO REPLACEMENT SIGN
1-2	21+90	LT	R1-1	---	---	1	1	30	X	30	5.18	1	---	
1-3	24+00	RT	J11-1	---	---	2	1	24	X	39	6.50	---	1	
1-4	32+00	LT	J4-1	---	---	---	---	24	X	36	6.00	---	1	
1-5	32+75	RT	J13-1	---	---	1	1	24	X	45	7.50	---	1	
1-6	33+65	LT	R1-1	---	---	1	1	30	X	30	5.18	1	---	
1-7	33+60	LT	J13-1	---	---	2	1	24	X	45	7.50	---	1	
1-8	34+90	LT	J13-1	---	---	2	1	24	X	45	7.50	---	1	
1-9	36+80	RT	W5-52R	---	---	1	1	12	X	36	3.00	1	---	
1-10	36+90	LT	W5-52L	---	---	1	1	12	X	36	3.00	1	---	
1-11	38+10	RT	W5-52L	---	---	1	1	12	X	36	3.00	1	---	
1-12	38+00	LT	W5-52R	---	---	1	1	12	X	36	3.00	1	---	
1-13	41+50	RT	D5-63	---	---	1	2	78	X	36	19.50	---	2	REMOVAL AT STA. 43+50, RT, PURPLE HEART HISTORICAL MARKER
1-14	43+35	LT	J4-1	---	---	2	1	24	X	39	6.50	---	1	
1-15	33+65	RT	W1-7	---	---	---	---	48	X	24	8.00	---	1	
1-16	35+50	RT	J4-1	---	---	---	---	24	X	36	6.00	---	1	
2-1	51+00	RT	W14-3	---	---	1	1	48	X	36	6.00	1	---	
2-2	62+00	RT	D5-64L	---	---	1	2	60	X	36	15.00	---	2	REMOVAL AT STA. 67+90, RT
2-3	77+20	LT	D5-64R	---	---	1	2	60	X	36	15.00	---	2	REMOVAL AT STA. 71+20, LT
2-4	68+20	LT	R1-1	---	---	---	---	30	X	30	5.18	1	---	
2-5	70+05	LT	R1-1	---	---	---	---	30	X	30	5.18	1	---	
3-1	97+10	LT	D5-63	---	---	1	2	78	X	36	19.50	---	2	REMOVAL AT STA. 91+90, LT, PURPLE HEART HISTORICAL MARKER
3-2	108+00	RT	W6-1	---	---	2	1	36	X	36	9.00	---	1	REMOVAL AT STA. 106+90, RT
3-3	110+00	LT	W14-3	---	---	1	1	48	X	36	6.00	1	---	
3-4	111+25	LT	I55-56	---	---	2	1	30	X	36	7.50	1	---	ADOPT-A-HIGHWAY, BOAZ AREA LIONS CLUB
3-5	111+35	RT	---	---	---	1	1	---	X	---	---	---	---	ADOPT-A-HIGHWAY, BOAZ AREA LIONS CLUB
4-1	120+80	LT WB	R5-1	---	---	2	1	36	X	36	9.00	1	---	
4-2	118+20	LT	W6-3	---	---	---	---	36	X	36	9.00	1	---	
4-3	122+25	LT EB	R4-7	---	---	1	1	36	X	48	12.00	1	---	
4-4	125+90	LT WB	---	---	---	1	1	---	X	---	---	---	---	
4-5	125+90	LT WB	R1-1	---	---	1	1	30	X	30	5.18	1.00	---	
			R6-3					30	X	24	5.00			MOUNT UNDER R1-1
4-6	125+90	LT WB	---	1	1	---	---	---	X	---	---	---	---	MOVE EXISTING EDEN VALLEY LANE SIGN
4-7	126+00	RT EB	R6-2L	---	---	1	1	24	X	30	5.00	1	---	
4-8	126+80	RT WB	W6-2	---	---	1	1	---	X	---	---	---	---	
4-9	126+60	LT WB	R5-1	---	---	1	1	36	X	36	9.00	1	---	
4-10	127+20	LT WB	---	---	---	1	1	---	X	---	---	---	---	
4-11	132+80	LT WB	W4-2L	---	---	1	1	36		36	9.00	1	---	
4-12	132+80	RT WB	W4-2L	---	---	1	1	36		36	9.00	1	---	
4-13	137+60	LT WB	W9-1L	---	---	1	1	36		36	9.00	1	---	
4-14	137+60	RT WB	W9-1L	---	---	1	1	36		36	9.00	1	---	
4-15	129+10	LT WB	R5-1A	---	---	---	---	42	X	30	8.75	1	---	
4-16	125+10	EB RT	W6-2	---	---	---	---	36	X	36	9.00	1	---	
4-17	125+10	WB LT	W6-2	---	---	---	---	36	X	36	9	1	---	
			R5-1A					42	X	30	8.75			MOUNT ON THE BACK OF W6-2
5-1	155+00	RT EB	J1-1	---	---	2	1	36	X	57	14.25	---	1	
5-2	160+20	RT EB	R7-1L	---	---	1	1	24	X	30	5.00	1	---	
5-3	160+20	LT EB	R5-1A	---	---	1	1	42	X	30	8.75	1	---	
5-4	163+20	LT EB	R5-1	---	---	1	1	36	X	36	9.00	1	---	
5-5	164+10	RT EB	R7-1D	---	---	1	1	24	X	30	5.00	1	---	
5-6	164+50	RT EB	J12-1	---	---	1	1	36	X	66	16.50	---	2	
5-7	165+90	LT EB	R4-7	---	---	1	1	36	X	48	12.00	1	---	
5-8	164+25	RT WB	R6-2L	---	---	1	1	24	X	30	5.00	1	---	
5-9	164+25	LT WB	J12-1	---	---	2	1	24	X	45	7.50	---	1	
5-10	167+40	RT EB	R7-1R	---	---	1	1	24	X	30	5.00	1	---	
5-11	166+80	RT EB	J4-1	---	---	---	---	36	X	54	13.50	---	1	
5-12	164+90	LT EB	R4-7	---	---	1	1	36	X	48	12.00	---	1	
5-13	164+90	LT WB	R6-1R	---	---	1	1	36	X	12	3.00	---	1	
			R1-1					36	X	36	7.46			
			R6-3					30	X	24	5.00			
5-14	165+60	RT EB	R6-1R	---	---	1	1	36	X	12	3.00	---	1	
			R1-1					36	X	36	7.46			
			R6-3					30	X	24	5.00			
5-15	166+00	EB LT	R6-2L	---	---	1	1	24	X	30	5.00	1	---	MOUNT ON BACK OF POST 5-18
5-16	165+90	WB LT	J12-1	---	---	2	1	36	X	66	16.50	---	1	
5-17	167+10	EB LT	R5-1	---	---	1	1	36	X	36	9.00	1	---	
5-18	166+00	EB LT	J13-1	---	---	1	1	24	X	45	7.50	1	---	
5-19	170+00	EB LT	R5-1A	---	---	1	1	42	X	30	8.75	1	---	
5-20	175+00	LT WB	J1-1	---	---	1	1	36	X	57	14.25	---	1	
5-21	163+50	WB LT	J4-1	---	---	---	---	36	X	54	13.50	---	1	
6-1	205+15	WB LT				1	1	---	X	---	---	---	---	
6-2	211+15	EB LT	R5-1A	---	---	1	1	36	X	24	6.00	1	---	
6-3	209+00	EB RT	D1-1	---	---	---	---	156	X	21	22.75	3	---	
7-1	215+90	LT	R6-2L	---	---	1	1	24	X	30	5.00	1	---	
7-2	214+90	EB LT	R6-1L	---	---	2	1	36	X	12	3.00	---	1	
			R1-1					36	X	36	7.46			
7-3	221+20	EB RT	W6-3	---	---	1	1	---	X	---	---	---	---	
7-4	214+15	WB LT	R6-2L	---	---	1	1	24	X	30	5.00	1	---	
7-5	214+15	WB LT	R6-1R	---	---	1	1	36	X	12	3.00	---	1	
			R1-1					36	X	36	7.46			
7-6	214+55	WB LT	R1-1	---	---	1	1	---	X	---	---	---	---	
7-7	212+80	RT EB	W4-2L	---	---	1	1	36	X	36	9.00	1	---	
7-8	212+80	LT EB	W4-2L	---	---	1	1	36	X	36	9.00	1	---	
7-9	214+10	EB LT	R5-1	---	---	1	1	36	X	36	9.00	1	---	
7-10	218+10	RT WB	R5-1A	---	---	1	1	36	X	24	6.00	1	---	
7-11	215+00	WB RT	R6-1L	---	---	2	1	36	X	12	3.00	---	1	
			R1-1					36	X	36	7.46			
7-12	219+50	EB RT	W6-2	---	---	---	---	36	X	36	9.00	---	1	MOUNT FACING EASTBOUND TRAFFIC
			R5-1A					36	X	24	6.00			MOUNT ON BACK OF W6-2 FACING WEST
7-13	222+05	EB RT	D1-1	---	---	1	2	84	X	15	8.75	2	---	
7-14	222+80	WB LT		---	---	1	1	---	X	---	---	---	---	
7-15	222+90	WB RT	R4-7	---	---	2	1	36	X	48	12.00	---	1	
			W5-54S					18	X	18	2.25			
7-16	225+10	EB RT	W6-3	---	---	---	---	36	X	36	9.00	1	---	
7-17	223+00	EB RT	R5-1	---	---	2	1	30	X	30	6.25	1	---	
7-18	229+40	LT	---	---	---	---	---	---	X	---	---	---	--	REMOVE AND REPLACE BY OTHERS
7-19	229+45	LT	R1-1	---	---	1	1	30	X	30	5.18	1	---	
7-20	235+50	RT	W14-3	---	---	1	1	48	X	36	6.00	---	1	
7-21	236+50	LT	D1-1	---	---	1	2	84	X	15	8.75	2	---	BUCKHORN LN
7-22	238+50	LT	W6-1	---	---	2	1	36	X	36	9.00	1	---	
7-23	220+90	WB LT	D1-1	---	---	1	2	156	X	21	22.75	3	---	TUCKAWAY VALLEY RD
7-24	240+00	RT	D1-1	---	---	1	2	96	X	15	10.00	2	---	PIER SPRING DR
7-25	243+10	RT	R1-1	---	---	1	1	30	X	30	5.18	1	---	
7-26	243+10	RT	---	---	---	---	---	---	X	---	---	---	---	REMOVA AND REPLACE BY OTHERS
7-27	221+20	EB LT	W6-3	---	---	1	1	---	X	---	---	---	---	
7-28	216+50	EB RT	W9-1L	---	---	---	---	36	X	36	9.00	1	---	
7-29	216+50	EB LT	W9-1L	---	---	---	---	36	X	36	9.00	1	---	
7-30	215+00	WB RT	R6-2R	---	---	---	---	24	X	30	5.00	---	---	MOUNT ON BACK OF SIGN POST 7-11
8-1	244+25	RT	I55-56	---	---	1	1	30	X	36	7.50	1	---	ADOPT-A-HIGHWAY, MORNINGSTAR FOODS EMPLOYEES
8-2	244+25	LT	---	---	---	1	1	---	X	---	---	---	---	ADOPT-A-HIGHWAY
8-3	249+50	LT	D1-1	---	---	1	2	96	X	15	10.00	2	---	PIER SPRING DR
8-4	249+75	RT	R7-1D	---	---	---	---	---	X	---	---	---	---	REMOVAL AND REPLACE BY OTHERS
8-5	252+40	RT	R1-1	---	---	1	1	30	X	30	5.18	1	---	
8-6	252+40	RT	---	---	---	---	---	---	X	---	---	---	---	REMOVE AND REPLACE BY OTHERS
8-7	263+00	LT	W14-3	---	---	1	1	48	X	36	6.00	1	---	
8-8	265+15	LT	R1-1	---	---	1	1	30	X	30	5.18	1	---	
8-9	265+15	LT	---	---	---	---	---	---	X	---	---	---	---	REMOVE AND REPOLACE VIVIANS LANE SIGN BY OTHERS
9-1	296+00	RT	W14-3	---	---	1	1	48	X	36	6.00	1	---	
9-2	299+60	RT	N/A	---	---	---	---	---	X	---	---	---	---	ALANA SPRINGS CAMPGROUND - SIGN TO REMAIN
9-3	302+50	RT	---	---	---	---	---	---	X	---	---	---	---	REMOVE AND REPLACE SPRING VALLEY RD SIGN BY OTHERS
9-4	302+50	RT	R1-1	---	---	1	1	30	X	30	5.18	1	---	
9-5	304+50	RT	D1-1	---	---	1	2	114	X	15	11.88	2	---	COVERED BRIDGE DRIVE
9-6	310+90	LT	---	---	---	---	---	---	X	---	---	---	---	REMOVE AND REPLACE COVERED BRIDGE DR SIGN BY OTHERS
9-7	310+90	LT	R1-1	---	---	1	1	30	X	30	5.18	1	---	
9-8	318+50	LT	D1-1	---	---	1	2	114	X	15	11.88	2	---	COVERED BRIDGE DRIVE
9-9	294+90	RT	D1-1	---	---	1	2	108	X	15	11.25	1	---	SPRING VALLEY RD
9-10	308+50	LT	D1-1	---	---	1	2	108	X	15	11.25	1	---	SPRING VALLEY RD
10-1	323+50	LT	N/A	---	---	---	---	---	X	---	---	---	---	ALANA SPRINGS CAMPGROUND - SIGN TO REMAIN
10-2	325+00	RT	N/A	---	---	1	1	---	X	---	---	---	---	PURPLE HEART MEMORIAL MARKER 1/2 MILE
10-3	328+00	LT	J4-1	---	---	1	1	36	X	54	13.50	---	1	
10-4	336+00	RT	D1-1		---	---	---	78	X	36	19.50	2	---	
10-5	337+00	LT	W14-3	---	---	1	1	48	X	36	6.00	1	---	
TOTALS				**1**	**1**	**108**	**106**	**---**		**---**	**912.03**	**79**	**35**	

FILE NAME : L:\Projects\11099\dwg\030101_mq.dgn
PLOT DATE : 11/06/12
PLOT BY : tmoyer
PLOT NAME :
PLOT SCALE : 1:200
WISDOT/CADDS SHEET 43

GUARDRAIL

STATION	-	STATION	LOCATION	ITEM NO. 204.0165 REMOVING GUARDRAIL LF	ITEM NO. 614.0305 STEEL PLATE BEAM GUARD CLASS A LF	ITEM NO. 614.0345 STEEL PLATE BEAM GUARD SHORT RADIUS LF	ITEM NO. 614.0370 STEEL PLATE BEAM GUARD ABSORBING TERMINAL EACH	ITEM NO. 614.0390 STEEL PLATE BEAM GUARD SHORT RADIUS TERMINAL EACH	ITEM NO. 614.2300 MGS GUARDRAIL 3 LF	ITEM NO. 614.2330 MGS GUARDRAIL 3 K LF	ITEM NO. 614.2500 MGS THRIE BEAM TRANSITION LF	ITEM NO. 614.2610 MGS GUARDRAIL TERMINAL EAT EACH	ITEM NO. 614.2620 MGS GUARDRAIL TERMINAL TYPE 2 EACH
35+92	-	36+42	LT	153	---	---	---	---	87.5	---	39	1	---
34+74	-	36+91	RT	149	---	---	---	---	125	---	39	1	---
37+97	-	40+14	LT	155	---	---	---	---	125	---	39	1	---
37+86	-	39+66	RT	155	---	---	---	---	87.5	---	39	1	---
107+07	-	107+79	LT	---	---	43.75	1	1	---	---	---	---	---
108+23	-	109+53	LT	119	81.25	43.75	1	1	---	---	---	---	---
107+49	-	109+10	RT	184	---	---	---	---	100	---	---	2	---
113+01	-	114+95	LT	176	---	---	---	---	137.5	---	---	2	---
112+64	-	114+57	RT	173	---	---	---	---	137.5	---	---	2	---
121+58	-	123+30	LT	347	---	---	---	---	112.5	---	---	1	1
142+11	-	145+40	LT	339	---	---	---	---	275	---	---	1	1
142+10	-	154+13	RT	1139	---	---	---	---	1150	---	---	1	1
169+25	-	174+02	LT	498	---	---	---	---	425	---	---	1	1
175+47	-	180+75	RT	592	---	---	---	---	---	475	---	1	1
177+02	-	178+80	LT	242	---	---	---	---	125	---	---	1	1
177+57	-	189+73	LT	1163	---	---	---	---	1162.5	---	---	1	1
180+90	-	183+73	RT	310	---	---	---	---	237.5	---	---	1	1
184+38	-	192+71	RT	846	---	---	---	---	---	787.5	---	1	1
187+32	-	189+23	RT	---	---	---	---	---	137.5	---	---	1	1
213+40	-	214+34	RT	117	25	68.75	1	1	---	---	---	---	---
214+47	-	216+13	LT	350	---	---	---	---	75	87.5	---	2	---
237+78	-	240+22	LT	---	---	---	---	---	187.5	---	---	2	---
237+28	-	240+19	RT	---	---	---	---	---	225	---	---	2	---
250+03	-	251+70	RT	---	---	---	---	---	62.5	87.5	---	2	---
264+35	-	267+15	RT	---	90	86.5	2	2	---	---	---	---	---
265+35	-	267+61	LT	---	---	---	---	---	162.5	---	---	2	---
301+31	-	303+00	LT	---	100	43.75	1	1	---	---	---	---	---
303+35	-	304+08	LT	---	12.5	43.75	1	1	---	---	---	---	---
302+10	-	302+80	RT	---	---	---	---	---	---	75	---	2	---
TOTALS				7207	308.75	330.25	7	7	5137.5	1512.5	156	32	10

BARRIER SYSTEM GRADING SHAPING FINISHING, ITEM NO. 614.0100

STATION	-	STATION	LOCATION	SITE NO. AND DESCRIPTION	ITEM NO. 614.0010 BARRIER SYSTEM GRADING SHAPING FINISHING EACH	QUANTITIES BELOW ARE FOR INFORMATION ONLY AND ARE NOT PAY ITEMS: BORROW EXCAVATION C.Y.	TOPSOIL S.Y.	MULCH S.Y.	FERTILZER TYPE B CWT	SEEDING MIXTURE NO. 20 LB
34+74	-	36+91	RT	1 - SW	1	55	80	80	0.05	2.2
37+97	-	40+14	LT	1 - SE	1	30	80	80	0.05	2.2
37+86	-	39+66	RT	1 - NE	1	60	80	80	0.05	2.2
107+07	-	107+79	LT	3 - NW	1	30	80	80	0.05	2.2
108+23	-	109+53	LT	3 - NE	1	35	80	80	0.05	2.2
107+49	-	109+10	RT	3 - S	1	110	80	80	0.05	2.2
113+01	-	114+95	LT	4 - N	1	80	80	80	0.05	2.2
112+64	-	114+57	RT	4 - S	1	55	80	80	0.05	2.2
121+58	-	123+30	LT	5 - N	1	275	80	80	0.05	2.2
142+11	-	145+40	LT	7 - N	1	40	80	80	0.05	2.2
142+10 EB	-	154+13 EB	RT	8 - S	1	30	80	80	0.05	2.2
169+25.4 EB	-	174+02 EB	LT	9 - N	1	60	80	80	0.05	2.2
175+47	-	180+75	RT	10 - S	1	40	80	80	0.05	2.2
177+02	-	178+80	LT	10 - N	1	35	80	80	0.05	2.2
177+57 EB	-	189+72.5 EB	LT	11 - N	1	60	80	80	0.05	2.2
180+89.5 EB	-	183+73 EB	RT	11 - S	1	40	80	80	0.05	2.2
184+38	-	192+71	RT	12 - S	1	45	80	80	0.05	2.2
237+78	-	240+22	LT	14 - N	1	300	80	80	0.05	2.2
237+28	-	240+19	RT	14 - S	1	195	80	80	0.05	2.2
250+03	-	251+70	RT	15 - S	1	70	80	80	0.05	2.2
264+35	-	267+15	RT	16 - S	1	85	80	80	0.05	2.2
265+35	-	267+61	LT	16 - N	1	145	80	80	0.05	2.2
301+31	-	303+00	LT	17 - NW	1	30	80	80	0.05	2.2
303+35	-	304+08	LT	17 - NE	1	40	80	80	0.05	2.2
302+10	-	302+80	RT	17 - SE	1	35	80	80	0.05	2.2
TOTALS					25					

SAFETY GRATE SPECIAL, ITEM SPV.0060.03

STATION	LOCATION	EACH
189+40	LEFT	1
TOTAL		1

LOCATING NO PASSING ZONES, ITEM NO. 648.0100

STATION	-	STATION	MI
19+50	-	340+00	6.07
TOTAL			6.07

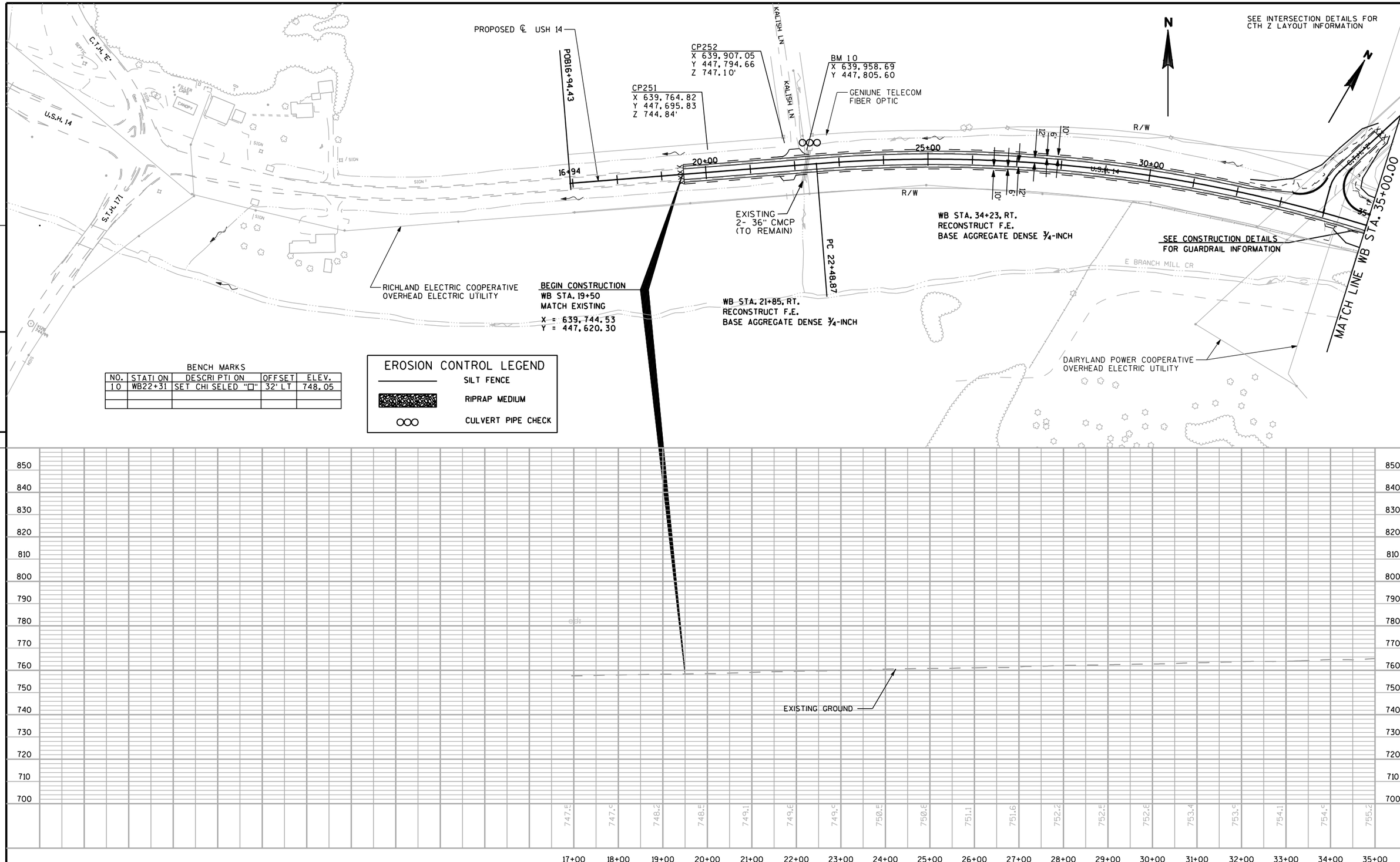

BENCH MARKS

NO.	STATION	DESCRIPTION	OFFSET	ELEV.
10	WB22+31	SET CHISELED "□"	32' LT	748.05

5

5

PROJECT NO: 1643-05-75	HWY: USH 14	COUNTY: RICHLAND	PLAN AND PROFILE STA 19+50 - 35+00	SHEET 58	E

FILE NAME : L:\Projects\11099\dwg\050101_pp.dgn PLOT DATE : 07/10/12 PLOT BY : tmoyer PLOT NAME : PLOT SCALE : 1:200

WISDOT/CADDS SHEET 40

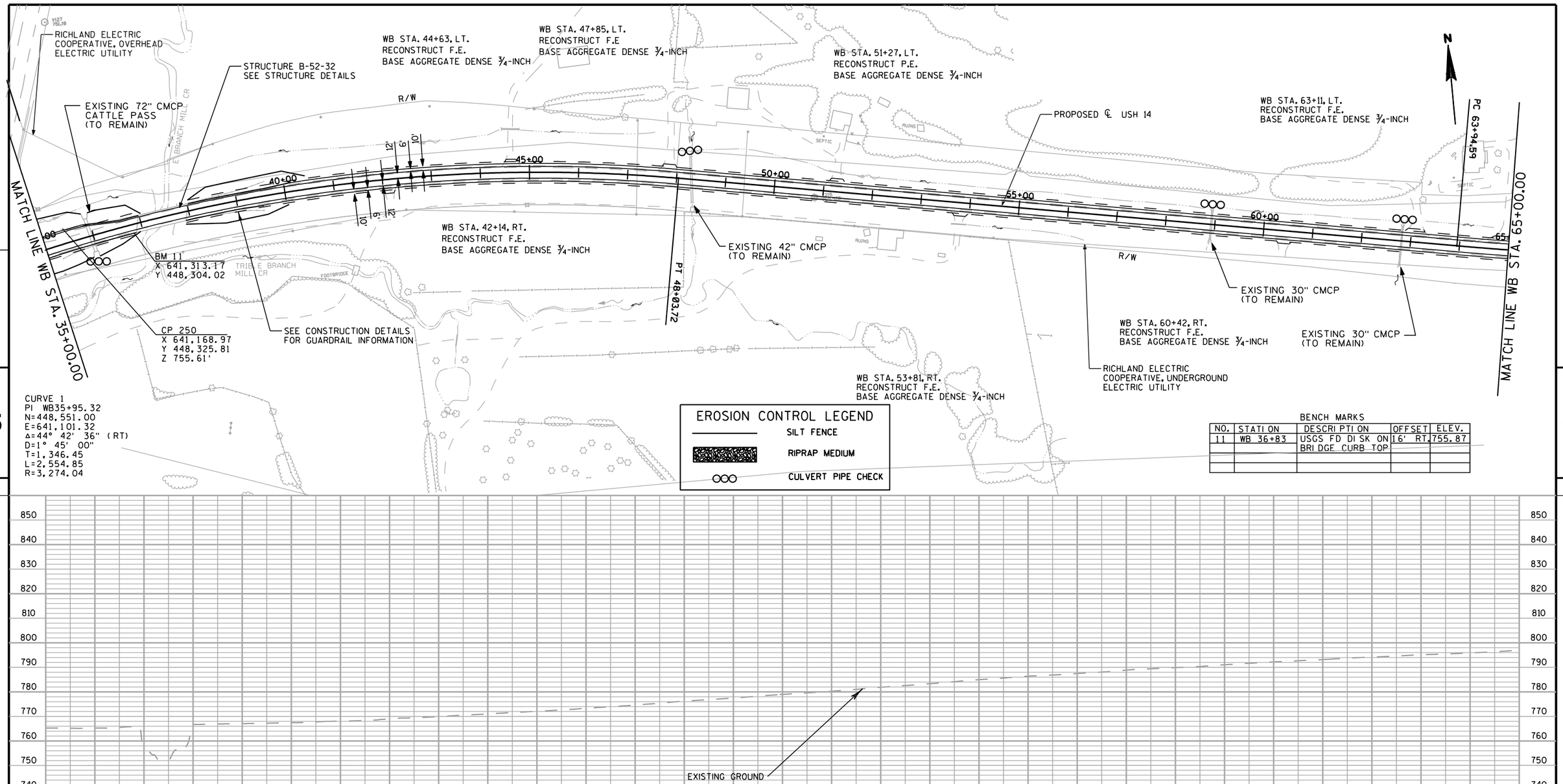

CURVE 1
PI WB35+95.32
N=448,551.00
E=641,101.32
Δ=44° 42' 36" (RT)
D=1° 45' 00"
T=1,346.45
L=2,554.85
R=3,274.04

EROSION CONTROL LEGEND

- SILT FENCE
- RIPRAP MEDIUM
- CULVERT PIPE CHECK

BENCH MARKS

NO.	STATION	DESCRIPTION	OFFSET	ELEV.
11	WB 36+83	USGS FD DISK ON BRIDGE CURB TOP	16' RT.	755.87

PROJECT NO: 1643-05-75	HWY: USH 14	COUNTY: RICHLAND	PLAN AND PROFILE STA 35+00 - 65+00	SHEET 59	E

FILE NAME : L:\Projects\11099\dwg\050102_pp.dgn PLOT DATE : 07/20/12 PLOT BY : tmoyer PLOT NAME : PLOT SCALE : 1:200

WISDOT/CADDS SHEET 40

WB STA. 65+00, LT.
RECONSTRUCT P.E.
ASPHALTIC SURFACE DRIVEWAYS
AND FIELD ENTRANCES

SEE CONSTRUCTION DETAILS
FOR PAVING OF PARKING AREA
STA. 68+60 - STA. 70+40, LT

WB STA. 71+91, LT.
RECONSTRUCT P.E.
BASE AGGREGATE DENSE 3/4 -INCH

WB STA. 74+18, LT.
RECONSTRUCT P.E.
ASPHALTIC SURFACE DRIVEWAYS
AND FIELD ENTRANCES

WB STA. 76+10, LT.
RECONSTRUCT P.E.
ASPHALTIC SURFACE DRIVEWAYS
AND FIELD ENTRANCES

CURVE 2
PI WB76+48.75
N=447,804.32
E=645,225.76
Δ=18° 38' 46" (LT)
D=0° 45' 00"
T=1,254.16
L=2,486.14
R=7,639.43

WB STA. 84+85, LT.
RECONSTRUCT P.E.
BASE AGGREGATE DENSE 3/4 -INCH

EXISTING 72" CMCP CATTLE PASS
REMOVE STONE ENDWALL.
REMOVE AND REPLACE FENCING
EXTEND 5' NORTH AND PLACE 72" APRON ENDWALL.
(REMOVAL AND REPLACING FENCE IS INCIDENTAL TO PAY ITEM
203.0200 REMOVING OLD STRUCTURE STA. 74+75.)

N

MATCH LINE WB STA. 65+00.00

MATCH LINE WB STA. 95+00.00

PT 88+80.73

VERIZON
TELEPHONE
COMPANY

PROPOSED ℄ USH 14

R/W

BM 12
X 644,973.10
Y 447,928.81

R/W
CP 1156
X 544,268.63
Y 447,960.32
Z 788.23'

EXISTING 48" CMCP
(TO REMAIN)

CP 1157
X 644,389.75
Y 447,942.85
Z 789.28'

EXISTING 24" CMCP
(TO REMAIN)

SEE CONSTRUCTION DETAILS
FOR GUARDRAIL INFORMATION

CP 1159
X 645,005.76
Y 447,885.89
Z 795.41'

CP 1160
X 645,118.70
Y 447,885.07
Z 796.68'

UNNAMED CR

SEE CONSTRUCTION DETAILS
FOR GUARDRAIL INFORMATION

PI 76+48.75

WB STA. 74+06, RT.
RECONSTRUCT F.E.
BASE AGGREGATE DENSE 3/4 -INCH

CP 1161
X 645,986.73
Y 447,907.99
Z 809.73'

REMOVE 42" CMCP
AND 2 HEADWALLS

CP 1162
X 646,124.10
Y 447,915.10
Z 810.85'

R/W

96' - 42" CMCP
2 ENDWALLS REQ'D
STA. 84+60, 43.3' RT TO
STA. 85+19, 41' LT

RICHLAND ELECTRIC COOPERATIVE, INC.
UNDERGROUND ELECTRIC UTILITY

EXISTING
2-30" CMCP
(TO REMAIN)

WB STA. 94+46, RT.
RECONSTRUCT F.E.
BASE AGGREGATE DENSE 3/4 -INCH

EROSION CONTROL LEGEND

SILT FENCE

RIPRAP MEDIUM

CULVERT PIPE CHECK

BENCH MARKS

NO.	STATION	DESCRIPTION	OFFSET	ELEV.
12	WB 73+83	FD PK NAIL	14' LT.	794.49

EXISTING GROUND

880 870 860 850 840 830 820 810 800 790 780 770 760 750 740 730

786.9 787.9 788.9 789.7 790.6 791.5 792.3 793.3 794.2 795.2 796.5 797.8 799.1 800.5 801.9 803.6 805.4 806.8 808.6 809.9 811.4 812.9 814.2 815.4 816.6 817.6 818.5 819.5 820.7 821.6 822.7

65+00 66+00 67+00 68+00 69+00 70+00 71+00 72+00 73+00 74+00 75+00 76+00 77+00 78+00 79+00 80+00 81+00 82+00 83+00 84+00 85+00 86+00 87+00 88+00 89+00 90+00 91+00 92+00 93+00 94+00 95+00

PROJECT NO: 1643-05-75	HWY: USH 14	COUNTY: RICHLAND	PLAN AND PROFILE STA 65+00 - 95+00	SHEET 60	E

FILE NAME : L:\Projects\11099\dwg\050103_pp.dgn PLOT DATE : 11/01/12 PLOT BY : tmoyer PLOT NAME : PLOT SCALE : 1:200

WISDOT/CADDS SHEET 40

BENCH MARKS

NO.	STATION	DESCRIPTION	OFFSET	ELEV.
13	WB 108+36	FD MARKER IN WINGWALL TOP	28' LT.	834.78
14	WB 113+79	CHISELED "⊓" EAST WINGWALL	27' LT.	840.47

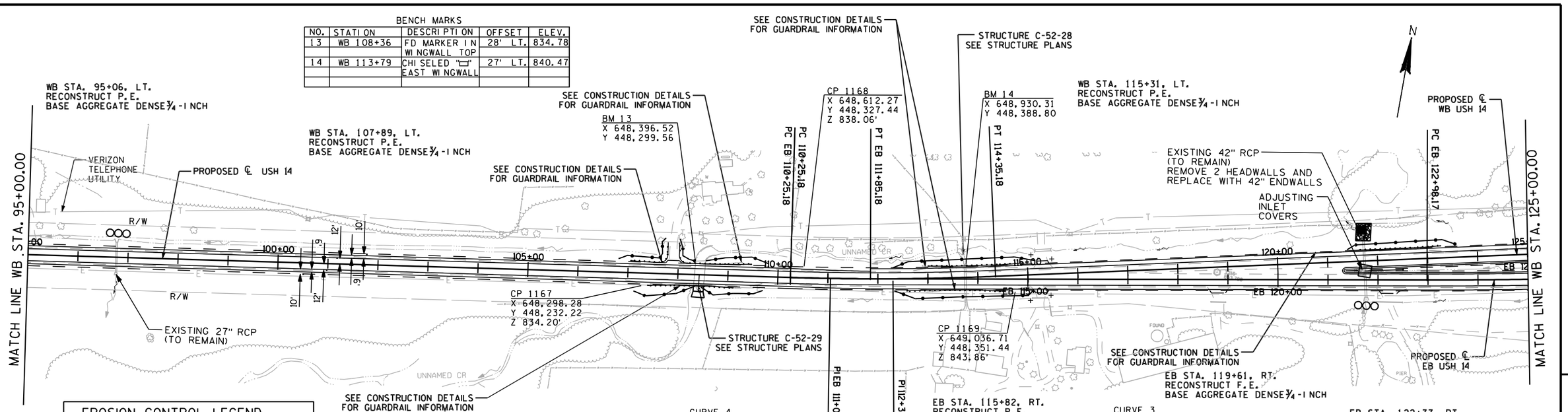

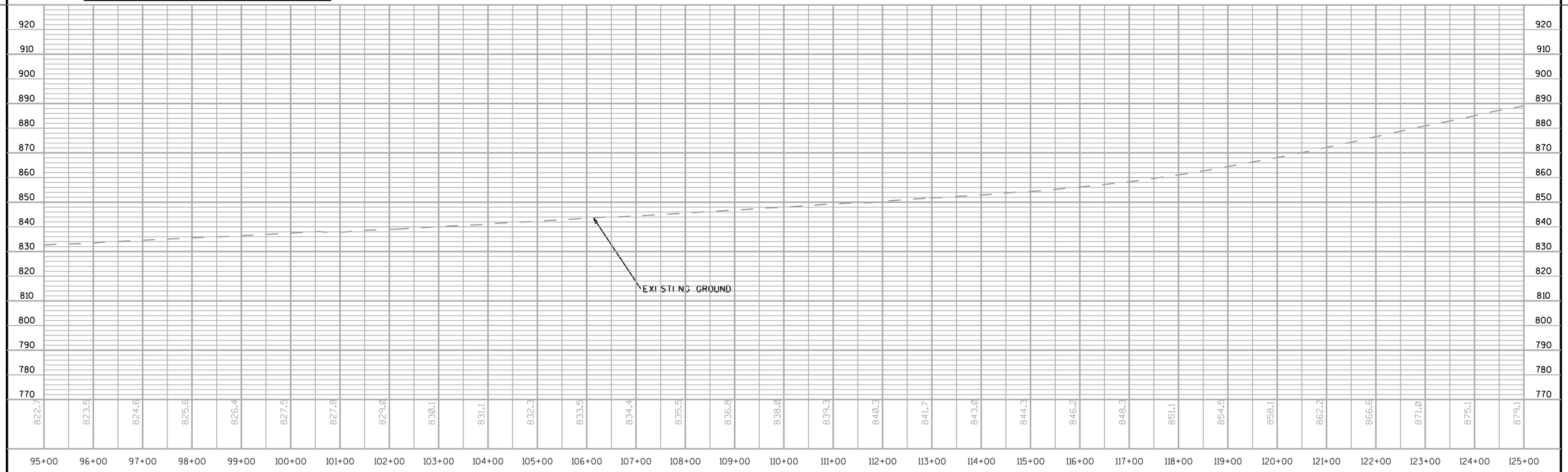

PROJECT NO: 1643-05-75	HWY: USH 14	COUNTY: RICHLAND	PLAN AND PROFILE STA 95+00 - 125+00	SHEET 61	E

FILE NAME : L:\Projects\11099\dwg\050104_pp.dgn PLOT DATE : 07/20/12 PLOT BY : tmoyer PLOT NAME : PLOT SCALE : 1:200

WISDOT/CADDS SHEET 40

WB STA. 126+06, LT.
RECONSTRUCT P.E.
BASE AGGREGATE DENSE 3/4 - INCH

CURVE 5
PI EB125+48.20
N=448,561.76
E=650,088.37
Δ=2° 30' 00" (LT)
D=0° 30' 00"
T=250.04
L=500.00
R=11,459.16

WB STA. 140+65, LT.
RECONSTRUCT F.E.
BASE AGGREGATE DENSE 3/4 - INCH

RICHLAND ELECTRIC COOPERATIVE, INC.
OVERHEAD ELECTRIC UTILITY

N

MATCH LINE WB STA. 125+00.00

EXISTING 18" CMCP
ADD APRON ENDWALL
(PIPE TO REMAIN)

VERIZON
TELEPHONE
COMPANY

STRUCTURE C-52-26
8' X 6' BOX CULVERT
SEE STRUCTURE PLANS

PROPOSED ℄
WB USH 14

STRUCTURE C-52-27
3.5' X 5' BOX CULVERT
SEE STRUCTURE PLANS

EXISTING 36" CMCP
REMOVE NORTH ENDWALL
EXTEND 5' TO NORTH AND
ADD NEW APRON ENDWALL

R/W

130+00 | 135+00 | 140+00 | 145+00 | 150+00

EB 130+00 | EB 135+00 | EB 140+00 | EB 145+00 | EB 150+00

PROPOSED ℄
EB USH 14

INLET PROTECTION TYPE D

INLET PROTECTION TYPE D

R/W

EXISTING 18" CMCP
EXTEND 13' EACH DIRECTION
2 - 18" ENDWALLS REQ'D

EXISTING 18" CMCP
(TO REMAIN)

SEE CONSTRUCTION DETAILS
FOR GUARDRAIL INFORMATION

SEE CONSTRUCTION DETAILS
FOR GUARDRAIL INFORMATION

RICHLAND ELECTRIC COOPERATIVE, INC.
BURIED ELECTRIC UTILITY

MATCH LINE WB STA. 155+00.00

EB STA. 134+88, RT.
RECONSTRUCT F.E.
BASE AGGREGATE DENSE 3/4 - INCH

EROSION CONTROL LEGEND
- SILT FENCE
- RIPRAP MEDIUM
- CULVERT PIPE CHECK

EXISTING GROUND

1000 990 980 970 960 950 940 930 920 910 900 890 880 870 860 850

879.1 882.7 886.0 888.8 891.4 893.6 895.4 896.8 898.3 900.0 901.5 903.4 905.5 908.3 912.0 916.2 921.1 926.7 932.4 938.3 944.4 950.4 956.7 962.5 968.5 974.6 980.7 986.7 992.6 998.4 1004.

125+00 126+00 127+00 128+00 129+00 130+00 131+00 132+00 133+00 134+00 135+00 136+00 137+00 138+00 139+00 140+00 141+00 142+00 143+00 144+00 145+00 146+00 147+00 148+00 149+00 150+00 151+00 152+00 153+00 154+00 155+00

PROJECT NO: 1643-05-75	HWY: USH 14	COUNTY: RICHLAND	PLAN AND PROFILE STA 125+00 - 155+00	SHEET 62 E

FILE NAME : L:\Projects\11099\dwg\050105_pp.dgn | PLOT DATE : 11/07/12 | PLOT BY : tmoyer | PLOT NAME : | PLOT SCALE : 1:200

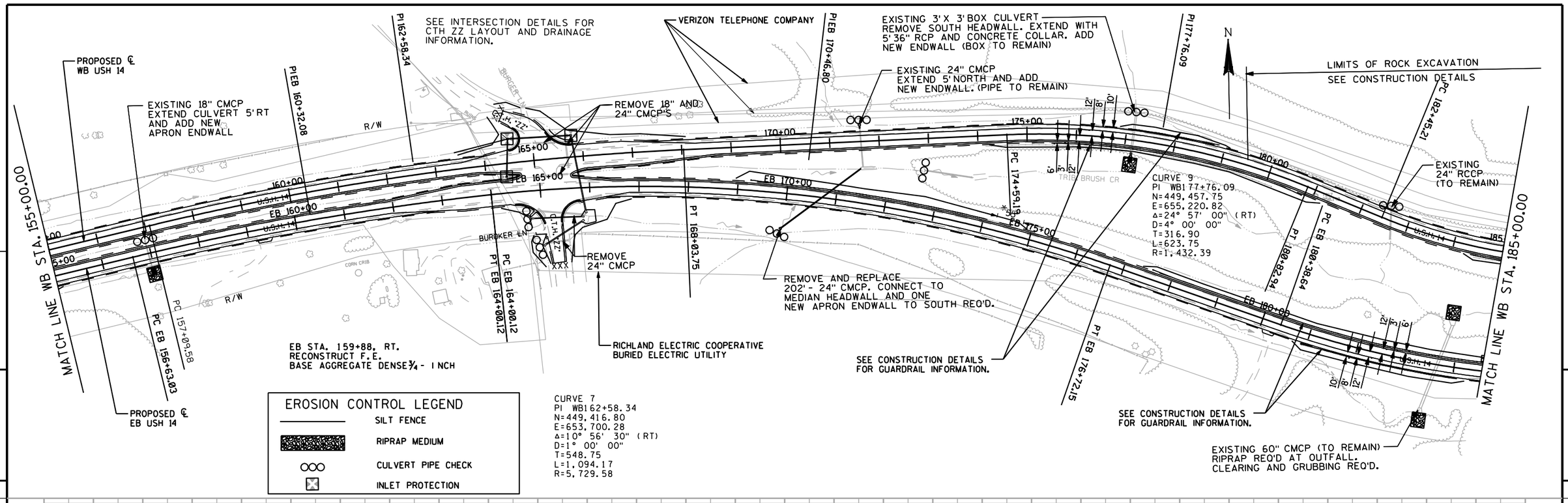

5

5

PROJECT NO: 1643-05-75	HWY: USH 14	COUNTY: RICHLAND	PLAN AND PROFILE STA 155+00 - 185+00	SHEET 63	E

FILE NAME : L:\Projects\11099\dwg\050106_pp.dgn PLOT DATE : 11/01/12 PLOT BY : tmoyer PLOT NAME : PLOT SCALE : 1:200

WISDOT/CADDS SHEET 40

MATCH LINE WB STA. 185+00.00

CURVE 10
PI WB186+03.49
N=449,125.07
E=655,989.35
Δ=34° 43' 30" (LT)
D=5° 00' 00"
T=358.28
L=694.50
R=1,145.92

EROSION CONTROL LEGEND

- SILT FENCE
- RIPRAP MEDIUM
- CULVERT PIPE CHECK

CURVE 11
PI EB189+81.09
N=448,726.12
E=656,335.46
Δ=52° 31' 45" (LT)
D=3° 00' 00"
T=942.44
L=1,750.97
R=1,909.86

CURVE 12
PI WB197+07.23
N=449,346.01
E=657,093.27
Δ=25° 34' 00" (LT)
D=2° 00' 00"
T=649.99
L=1,278.33
R=2,864.79

N

CP 1181
X 658,300.59
Y 450,733.34
Z 826.60'

TUCK-A-WAY VALLEY

PROPOSED ℄ WB USH 14

EXISTING 24" CMCP
EXTEND 24' AND
ADD NEW APRON ENDWALL
(EXISTING PIPE TO REMAIN)

R/W

SEE CONSTRUCTION DETAILS
FOR SAFETY GRATE SPECIAL DETAIL

VERIZON
TELEPHONE
COMPANY

EXISTING 24" RCCP
EXTEND 5'NORTH AND
ADD NEW APRON ENDWALL
(PIPE TO REMAIN)

EXISTING 24" RCCP
EXTEND 5'NORTH AND
ADD NEW APRON ENDWALL
(PIPE TO REMAIN)

EXISTING 24" RCCP
EXTEND 5'NORTH AND
ADD NEW APRON ENDWALL
(PIPE TO REMAIN)

190+00
195+00
200+00
205+00
210+00

U.S.H. 14

TRIB. BRUSH CR

REMOVE STRUCTURE C-52-30
SEE STRUCTURE PLANS FOR
NEW STRUCTURE C-52-166

SLOPE
INTERCEPTS (TYP)

BEGIN RECONSTRUCTION
STA WB 206+79.99

EB 190+00
EB 195+00
EB 200+00
EB 205+00
EB 210+00
EB 215+00

EXISTING
3.5' X 5' BOX CULVERT
(TO REMAIN)

PROPOSED ℄
EB USH 14

R/W

MATCH LINE WB STA. 215+00.00

CP 1176
X 656,231.15
Y 448,912.54
Z 920.77'

CP 1177
X 656,390.45
Y 448,975.43
Z 911.44'

CP 1180
X 658,602.41
Y 450,110.76
Z 841.43'

EXISTING
36" CMCP
(TO REMAIN)

EXISTING 72" CMCP
CATTLE PASS
(TO REMAIN)

RICHLAND ELECTRIC
COOPERATIVE
BURIED ELECTRIC
UTILITY

EXISTING
36" CMCP
(TO REMAIN)

EXISTING
24" CMCP
(TO REMAIN)

EXISTING
42" CMCP
(TO REMAIN)

EXISTING 42" CMCP
REMOVE HEADWALLS AND
REPLACE WITH APRON ENDWALLS
(PIPE TO REMAIN)

WB STA. 190+01, LT.
RECONSTRUCT P.E.
ASPHALTIC SURFACE DRIVEWAYS
AND FIELD ENTRANCES

WB STA. 201+85, RT.
RECONSTRUCT F.E.
BASE AGGREGATE DENSE ¾ - INCH

EB STA. 202+62, RT.
RECONSTRUCT P.E.
BASE AGGREGATE DENSE ¾ - INCH

EB STA. 206+75, RT.
RECONSTRUCT P.E.
BASE AGGREGATE DENSE ¾ - INCH

CURVE 13
PI WB214+27.26
N=450,391.37
E=658,486.34
Δ=47° 21' 20" (RT)
D=4° 16' 33"
T=587.60
L=1,107.52
R=1,340.00

SEE INTERSECTION DETAILS FOR
TUCK-A-WAY VALLEY ROAD
LAYOUT INFORMATION

950 940 930 920 910 900 890 880 870 860 850 840 830 820 810 800

EXISTING GROUND

WESTBOUND RECONSTRUCTION PROFILE

PVI 206+80.00
Elev 851.85

PVI 208+50.00
Elev 849.18

PVT 209+75.00
Elev 845.70

PVC 212+50.00
Elev 838.03

PVI 214+00.00
Elev 833.85

PVC 207+25.00
Elev 851.14

L 250.00'
SD 1012'
K 206

L 300.00'
K 172

FINISHED PROFILE

EXISTING GROUND

926.6 921.0 914.7 908.7 902.3 896.6 890.8 886.0 881.5 877.6 874.2 871.4 869.0 866.7 864.4 861.9 859.7 857.9 856.5 854.7 853.4 852.2 850.9 851.54 849.3 849.83 847.0 847.65 844.0 845.00 840.6 842.21 837.4 839.42 834.2 836.71 831.8 834.51 830.7 832.88

185+00 186+00 187+00 188+00 189+00 190+00 191+00 192+00 193+00 194+00 195+00 196+00 197+00 198+00 199+00 200+00 201+00 202+00 203+00 204+00 205+00 206+00 207+00 208+00 209+00 210+00 211+00 212+00 213+00 214+00 215+00

PROJECT NO: 1643-05-75	HWY: USH 14	COUNTY: RICHLAND	PLAN AND PROFILE STA 185+00 - 215+00	SHEET 64 E

FILE NAME : L:\Projects\11099\dwg\050107_pp.dgn PLOT DATE : 07/20/12 PLOT BY : tmoyer PLOT NAME : PLOT SCALE : 1:200

WISDOT/CADDS SHEET 40

EROSION CONTROL LEGEND
SILT FENCE
RIPRAP MEDIUM
CULVERT PIPE CHECK

WB STA. 217+53, LT.
RECONSTRUCT P.E.
BASE AGGREGATE DENSE 3/4-INCH

CURVE 14
PI EB217+68.90
N=450,283.14
E=658,807.74
Δ=41° 05' 40" (RT)
D=2° 30' 00"
T=859.03
L=1,643.77
R=2,291.83

WB STA. 218+71, LT.
RECONSTRUCT P.E.
BASE AGGREGATE DENSE 3/4-INCH

PIEB 217+68.90

MATCH LINE STA. 215+00.00

SLOPE INTERCEPTS

END RECONSTRUCTION
WB STA. 221+10

VERIZON TELEPHONE COMPANY

CP 1183
X 660,056.19
Y 450,419.84
Z 796.97'

SEE INTERSECTION DETAILS
FOR BUCKHORN DR. LAYOUT.

WB STA. 237+01, LT.
RECONSTRUCT F.E.
BASE AGGREGATE DENSE 3/4-INCH

CURVE 15
PI WB240+66.08
N=449,899.50
E=661,147.76
Δ=13° 56' 03" (LT)
D=0° 59' 16"
T=708.77
L=1,410.54
R=5,800.00

PC 233+57.31

POEEB 235+15.89

PROPOSED ℄
USH 14

SEE CONSTRUCTION DETAILS
FOR GUARDRAIL INFORMATION.

MATCH LINE STA. 245+00.00

PROPOSED ℄
WB USH 14

PROPOSED ℄
EB USH 14

PT 219+47.19

PT EB 225+53.64

RICHLAND ELECTRIC COOPERATIVE, INC.
BURIED ELETRIC UTILITY

CP 1184
X 660,185.31
Y 450,006.96
Z 812.95'

EXISTING 30" CMCP
EXTEND 5' SOUTH.
REMOVE AND REPLACE SOUTH
HEADWALL WITH APRON ENDWALL
(PIPE TO REMAIN)

EXISTING C-52-25
8'X 8' BOX CULVERT
(TO REMAIN)

CP 1186
X 661,267.59
Y 449,859.54
Z 785.01'

P 240+66.08

GENUINE TELECOM
TELEPHONE UTILITY

PIER SPRING RD.

CP 1187
X 661,366.42
Y 449,597.63
Z 800.42'

WB STA. 227+37, RT.
RECONSTRUCT P.E.
BASE AGGREGATE DENSE 3/4-INCH

WB STA. 237+20, RT.
RECONSTRUCT P.E.
BASE AGGREGATE DENSE 3/4-INCH

SEE INTERSECTION DETAILS
FOR PIER SPRING RD. LAYOUT.

WESTBOUND RECONSTRUCTION PROFILE

PVT 215+50.00
Elev 832.29

PVC 215+60.00
Elev 832.19

PVT 217+40.00
Elev 830.91

L 180.00'
K 274

PVI 221+10.00
Elev 829.49

PVI 216+50.00
Elev 831.25

FINISHED PROFILE

EXISTING GROUND

EXISTING ELEVATION

PROPOSED ELEVATION

| | | |

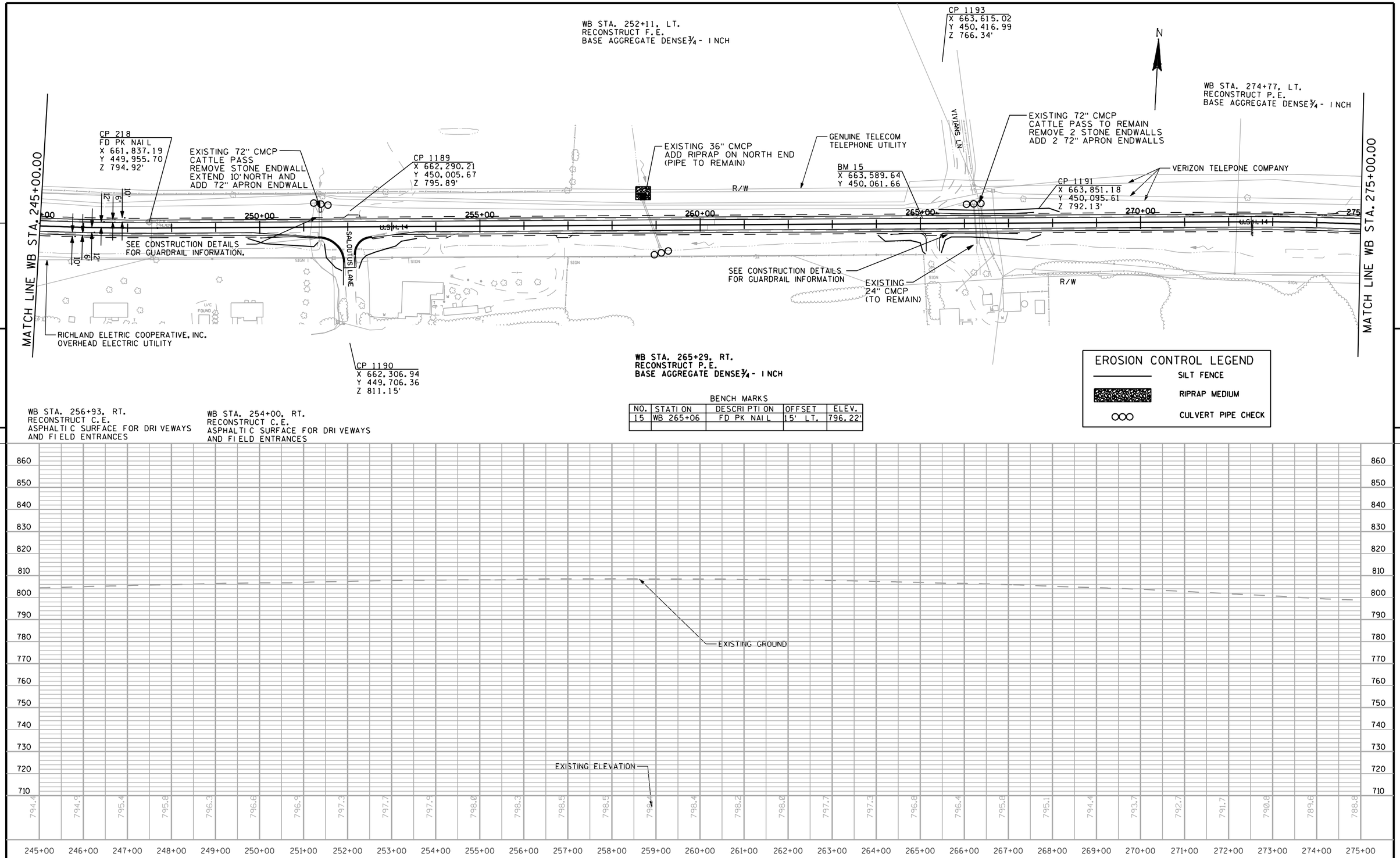

5

5

BENCH MARKS

NO.	STATION	DESCRIPTION	OFFSET	ELEV.
15	WB 265+06	FD PK NAIL	15' LT.	796.22'

PROJECT NO: 1643-05-75	HWY: USH 14	COUNTY: RICHLAND	PLAN AND PROFILE STA 245+00 - 275+00	SHEET 66 E

FILE NAME : L:\Projects\11099\dwg\050109_pp.dgn PLOT DATE : 07/10/12 PLOT BY : tmoyer PLOT NAME : PLOT SCALE : 1:200

WISDOT/CADDS SHEET 40

CURVE 16
PI 280+86.17
N=450,142.77
E=665,167.48
Δ=17° 06' 06" (RT)
D=1° 00' 00"
T=861.49
L=1,710.18
R=5,729.58

PI 280+86.17

MATCH LINE WB STA. 275+00.00

CP 1194
X 664,791.06
Y 450,123.29
Z 786.63'

CP 1195
X 664,967.17
Y 450,069.90
Z 783.34'

REMOVE EXISTING 72" CMCP
CATTLE PASS. REPLACE WITH
146' OF 48" CULVERT PIPE AND
2 APRON ENDWALLS
INVERT EL. RT 771.2
DISCHARGE EL. LT 762.3

WB STA. 277+33, RT.
RECONSTRUCT P.E.
BASE AGGREGATE DENSE 3/4-INCH

VERIZON TELEPHONE COMPANY

GENUINE TELECOM
TELEPHONE UTILITY

RICHLAND ELECTRIC COOPERATIVE, INC.
OVERHEAD ELECTRIC UTILITY

PT 289+34.95

WB STA. 291+29, RT.
RECONSTRUCT F.E.
BASE AGGREGATE DENSE 3/4-INCH

WB STA. 291+24, LT.
RECONSTRUCT P.E.
BASE AGGREGATE DENSE 3/4-INCH

WB STA. 295+07, LT.
RECONSTRUCT P.E.
BASE AGGREGATE DENSE 3/4-INCH

EXISTING
36" CMCP
(TO REMAIN)

PROPOSED ℄ USH 14

WB STA. 297+06, LT.
RECONSTRUCT P.E.
BASE AGGREGATE DENSE 3/4-INCH

SEE STRUCTURE PLANS
FOR C-52-24

SEE CONSTRUCTION DETAILS
FOR GUARDRAIL INFORMATION.

EXISTING
73"X55" ARCH CMP
(TO REMAIN)

SPRING VALLEY ROAD

TRIB. BRUSH CR

CP 1206
X 667,393.77
Y 449,570.81
Z 759.95'

CP 1207
X 667,157.16
Y 449,310.47
Z 756.75'

SEE INTERSECTION DEATILS
FOR SPRING VALLEY ROAD LAYOUT.

MATCH LINE WB STA. 305+00.00

N

EROSION CONTROL LEGEND
- SILT FENCE
- RIPRAP MEDIUM
- CULVERT PIPE CHECK

EXISTING GROUND

860 850 840 830 820 810 800 790 780 770 760 750 740 730 720 710

788.8 787.7 786.5 785.3 784.1 783.0 781.9 780.5 779.6 778.4 777.3 776.0 774.7 773.8 772.8 771.8 770.9 769.8 768.7 767.8 766.9 765.8 764.8 764.6 763.7 763.1 763.0 762.9 762.7 762.7 762.7

275+00 276+00 277+00 278+00 279+00 280+00 281+00 282+00 283+00 284+00 285+00 286+00 287+00 288+00 289+00 290+00 291+00 292+00 293+00 294+00 295+00 296+00 297+00 298+00 299+00 300+00 301+00 302+00 303+00 304+00 305+00

PROJECT NO: 1643-05-75	HWY: USH 14	COUNTY: RICHLAND	PLAN AND PROFILE STA 275+00 TO 305+00	SHEET 67	E

FILE NAME : L:\Projects\11099\dwg\050110_pp.dgn PLOT DATE : 07/20/12 PLOT BY : tmoyer PLOT NAME : PLOT SCALE : 1:200

WISDOT/CADDS SHEET 40

MATCH LINE STA. 305+00.00

MATCH LINE STA. 335+00.00

RICHLAND ELECTRIC COOPERATIVE, INC.
BURIED ELECTRIC UTILITY

CP 1211
X 668,122.10
Y 449,735.74
Z 750.32'

SEE INTERSECTION DETAILS
FOR COVERED BRIDGE ROAD LAYOUT.

CURVE 17
PI WB316+38.79
N=449,302.05
E=668,632.38
Δ=2° 12' 02" (RT)
D=0° 15' 00"
T=440.15
L=880.19
R=22,918.32

GENUINE TELECOM
TELEPHONE UTILITY

VERIZON
TELEPHONE
COMPANY

COVERED BRIDGE RD.

CP 220
FD PK NAIL
X 668,410.25
Y 449,370.04
Z 764.06'

PI 316+38.79

PROPOSED
USH 14

EXISTING 72" CMCP
CATTLE PASS
(TO REMAIN)

R/W

310+00

315+00

320+00

325+00

330+00

U.S.H. 14

EXISTING
24" CMCP
(TO REMAIN)

PC 311+98.64

PT 320+78.83

EXISTING
36" RCCP
(TO REMAIN)

WE ENERGIES
GAS UTILITY

CAUTION

ALLIANT
OVERHEAD ELECTRIC UTILITY

CP 1209
X 668,141.29
Y 449,365.07
Z 764.99'

WB STA. 305+68, RT
RECONSTRUCT P.E.
BASE AGGREGATE DENSE 3/4-INCH

WB STA. 332+32, RT.
RECONSTRUCT P.E.
BASE AGGREGATE DENSE 3/4-INCH

WB STA. 334+15, LT.
RECONSTRUCT P.E.
BASE AGGREGATE DENSE 3/4-INCH

WB STA. 334+85, LT.
RECONSTRUCT P.E.
BASE AGGREGATE DENSE 3/4-INCH

WB STA. 332+29, RT.
RECONSTRUCT P.E.
BASE AGGREGATE DENSE 3/4-INCH

EROSION CONTROL LEGEND

SILT FENCE

RIPRAP MEDIUM

CULVERT PIPE CHECK

EXISTING GROUND

762.7 762.8 762.9 763.3 763.4 763.7 764.0 764.1 764.4 764.3 764.1 763.9 763.7 763.3 762.8 762.4 762.1 761.4 760.6 759.9 758.9 758.2 757.2 756.0 754.8 753.5 752.4 751.3 750.5 750.0 749.2

305+00 306+00 307+00 308+00 309+00 310+00 311+00 312+00 313+00 314+00 315+00 316+00 317+00 318+00 319+00 320+00 321+00 322+00 323+00 324+00 325+00 326+00 327+00 328+00 329+00 330+00 331+00 332+00 333+00 334+00 335+00

PROJECT NO: 1643-05-75	HWY: USH 14	COUNTY: RICHLAND	PLAN AND PROFILE STA 305+00 TO 375+00	SHEET 68 E

FILE NAME : L:\Projects\11099\dwg\050111_pp.dgn PLOT DATE : 07/20/12 PLOT BY : tmoyer PLOT NAME : PLOT SCALE : 1:199.999

WISDOT/CADDS SHEET 40

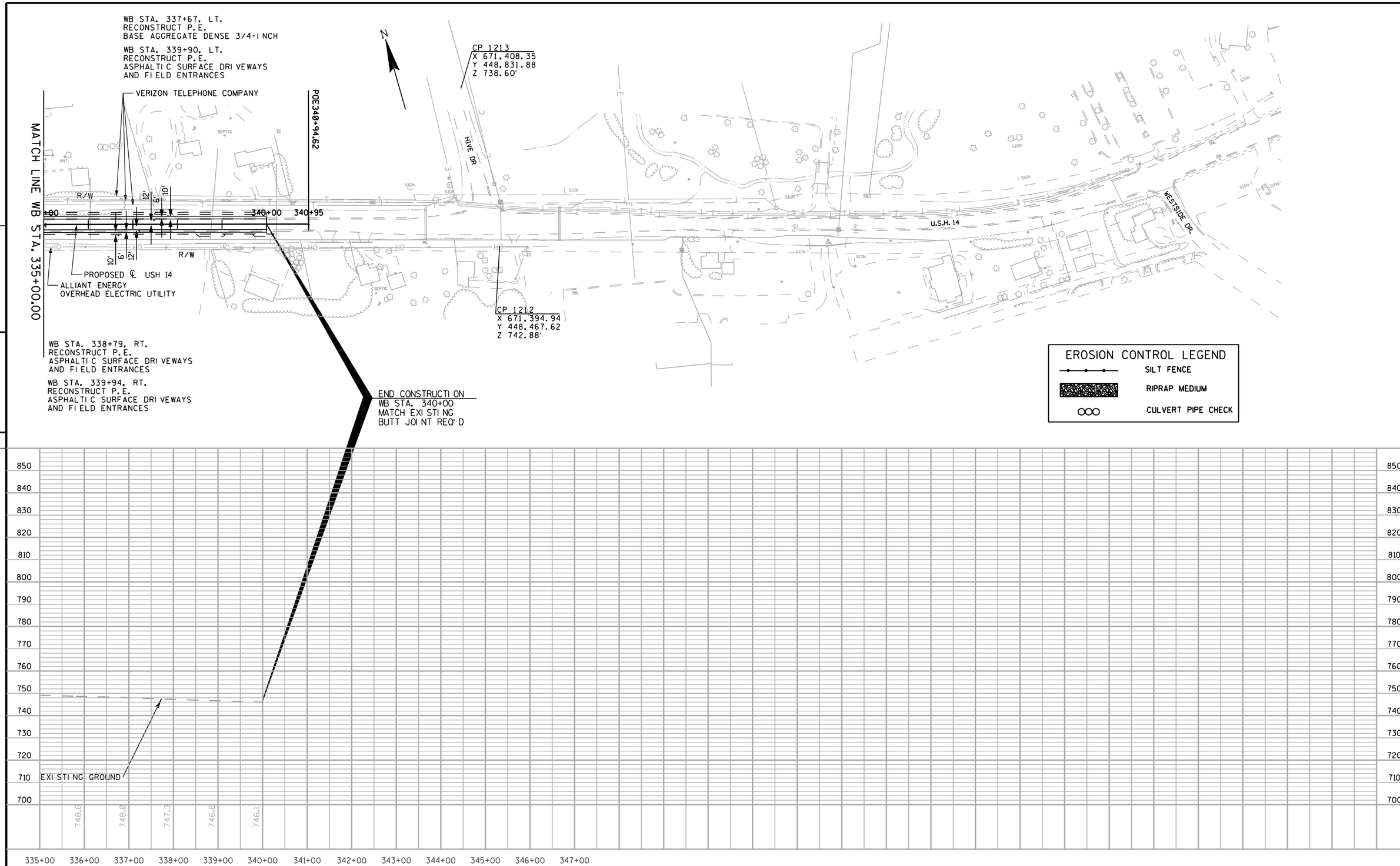

PROJECT NO: 1643-05-75	HWY: USH 14	COUNTY: RICHLAND	PLAN AND PROFILE STA 335+00 TO 340+00	SHEET 69	E

FILE NAME : L:\Projects\11099\dwg\050112_pp.dgn PLOT DATE : 07/20/12 PLOT BY : tmoyer PLOT NAME : PLOT SCALE : 1:200

WISDOT/CADDS SHEET 40

Standard Detail Drawing List

08A05-18B	INLET COVERS TYPE B, B-A, C, MS, MS-A, & WM
08C08-01	INLETS MEDIAN 1 AND 2 GRATE
08D01-17	CONCRETE CURB, CONCRETE CURB AND GUTTER AND TIES
08D04-05	CONCRETE SURFACE DRAINS & ASPHALTIC FLUMES
08E09-06	SILT FENCE
08E10-02	INLET PROTECTION TYPE A, B, C AND D
08F01-11	APRON ENDWALLS FOR CULVERT PIPE
08F04-06	JOINT TIES FOR CONCRETE PIPE
08F04-07	JOINT TIES FOR CONCRETE PIPE AND CONCRETE COLLAR DETAIL
09A01-12A	AT-GRADE SIDE ROAD INTERSECTION, TYPES "B1", "B2", "C" AND D AND TEE INTERSECTION BYPASS LANE
12A03-10	NAME PLATE (STRUCTURES)
13A05-04A	SHOULDER RUMBLE STRIP, MILLING
13A05-04B	SHOULDER RUMBLE STRIP, MILLING
14B15-07A	STEEL PLATE BEAM GUARD, CLASS "A" INSTALLATION & ELEMENTS
14B15-07B	STEEL PLATE BEAM GUARD, CLASS "A" INSTALLATION & ELEMENTS
14B15-07C	STEEL PLATE BEAM GUARD, CLASS "A", INSTALLATION & ELEMENTS
14B24-07A	STEEL PLATE BEAM GUARD ENERGY ABSORBING TERMINAL
14B24-07B	STEEL PLATE BEAM GUARD ENERGY ABSORBING TERMINAL
14B24-07C	STEEL PLATE BEAM GUARD ENERGY ABSORBING TERMINAL
14B27-01A	STEEL PLATE BEAM GUARD SHORT RADIUS TERMINAL
14B27-01B	STEEL PLATE BEAM GUARD SHORT RADIUS TERMINAL
14B27-01C	STEEL PLATE BEAM GUARD SHORT RADIUS TERMINAL
14B42-02A	MIDWEST GUARDRAIL SYSTEM (MGS) GUARDRAIL
14B42-02B	MIDWEST GUARDRAIL SYSTEM (MGS) GUARDRAIL
14B42-02C	MIDWEST GUARDRAIL SYSTEM (MGS) GUARDRAIL
14B44-01A	MIDWEST GUARDRAIL SYSTEM ENERGY ABSORBING TERMINAL (MGS)
14B44-01B	MIDWEST GUARDRAIL SYSTEM ENERGY ABSORBING TERMINAL (MGS)
14B44-01C	MIDWEST GUARDRAIL SYSTEM ENERGY ABSORBING TERMINAL (MGS)
14B45-02A	MIDWEST GUARDRAIL SYSTEM THRIE BEAM TRANSITION (MGS)
14B45-02B	MIDWEST GUARDRAIL SYSTEM THRIE BEAM TRANSITION (MGS)
14B45-02C	MIDWEST GUARDRAIL SYSTEM THRIE BEAM TRANSITION (MGS)
14B45-02D	MIDWEST GUARDRAIL SYSTEM THRIE BEAM TRANSITION (MGS)
14B45-02E	MIDWEST GUARDRAIL SYSTEM THRIE BEAM TRANSITION (MGS)
14B45-02F	MIDWEST GUARDRAIL SYSTEM THRIE BEAM TRANSITION (MGS)
14B45-02G	MIDWEST GUARDRAIL SYSTEM THRIE BEAM TRANSITION (MGS)
14B45-02H	MIDWEST GUARDRAIL SYSTEM THRIE BEAM TRANSITION (MGS)
14B45-02I	MIDWEST GUARDRAIL SYSTEM THRIE BEAM TRANSITION (MGS)
14B45-02J	MIDWEST GUARDRAIL SYSTEM THRIE BEAM TRANSITION (MGS)
14B45-03A	MIDWEST GUARDRAIL SYSTEM THRIE BEAM TRANSITION (MGS)
14B45-03B	MIDWEST GUARDRAIL SYSTEM THRIE BEAM TRANSITION (MGS)
14B45-03C	MIDWEST GUARDRAIL SYSTEM THRIE BEAM TRANSITION (MGS)
14B45-03D	MIDWEST GUARDRAIL SYSTEM THRIE BEAM TRANSITION (MGS)
14B45-03E	MIDWEST GUARDRAIL SYSTEM THRIE BEAM TRANSITION (MGS)
14B45-03F	MIDWEST GUARDRAIL SYSTEM THRIE BEAM TRANSITION (MGS)
14B45-03G	MIDWEST GUARDRAIL SYSTEM THRIE BEAM TRANSITION (MGS)
14B45-03H	MIDWEST GUARDRAIL SYSTEM THRIE BEAM TRANSITION (MGS)
14B45-03I	MIDWEST GUARDRAIL SYSTEM THRIE BEAM TRANSITION (MGS)
14B45-03J	MIDWEST GUARDRAIL SYSTEM THRIE BEAM TRANSITION (MGS)
14B47-01A	MIDWEST GUARDRAIL SYSTEM (MGS) TYPE 2 TERMINAL
14B47-01B	MIDWEST GUARDRAIL SYSTEM (MGS) TYPE 2 TERMINAL
14B47-01C	MIDWEST GUARDRAIL SYSTEM (MGS) TYPE 2 TERMINAL
15C03-01	BARRICADES AND SIGNS FOR SIDEROAD CLOSURES
15C04-01	TRAFFIC CONTROL, ADVANCE WARNING SIGNS 45 M.P.H. OR GREATER TWO-WAY UNDIVIDED ROAD OPEN TO TRAFFIC
15C06-05	SIGNING & MARKING FOR TWO LANE BRIDGES
15C08-15A	PAVEMENT MARKING (MAINLINE)
15C08-15B	PAVEMENT MARKING (INTERSECTIONS)
15C08-15E	PAVEMENT MARKING (LEFT TURN LANE)
15C08-15F	PAVEMENT MARKING (ISLANDS, STOP LINE & CROSS WALK)
15C11-05	FLEXIBLE TUBULAR MARKER POST, ANCHOR & BASES
15C12-03	TRAFFIC CONTROL FOR LANE CLOSURE (SUITABLE FOR MOVING OPERATIONS)
15C21-04	SIGNING AND MARKING FOR TWO LANE TO FOUR LANE DIVIDED TRANSITIONS
15D20-01	TRAFFIC CONTROL, SINGLE LANE CLOSURE, NON-FREEWAY/EXPRESSWAY

6

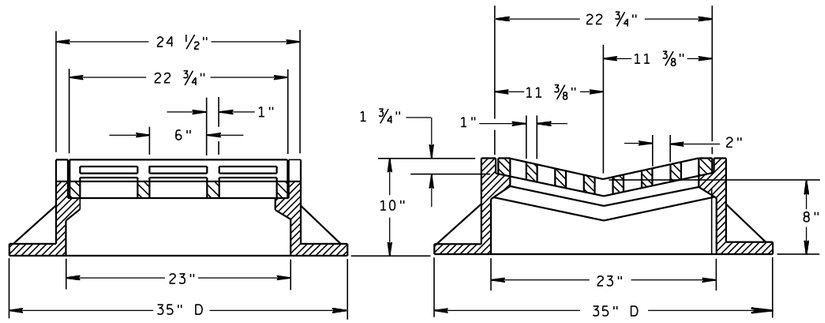

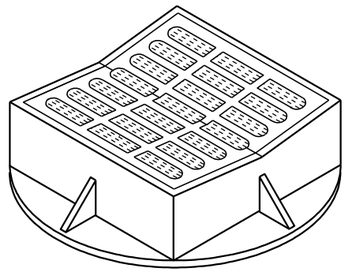

TYPE "B"

(APPROXIMATE WEIGHT 405 LBS.)

FRAME..... 294 LBS.
GRATE..... 111 LBS.

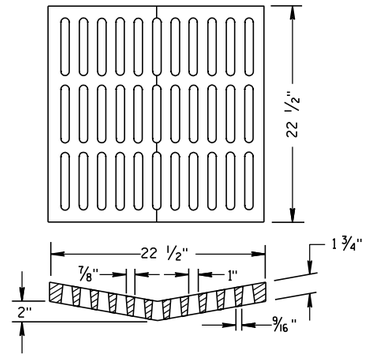

ALTERNATIVE GRATE FOR TYPE "B" COVER

(APPROXIMATE GRATE WEIGHT 134 LBS.)

USE WHERE PEDESTRIAN OR BICYCLE TRAFFIC IS POSSIBLE.

NOTED AS TYPE B-A ON THE DRAINAGE TABLE

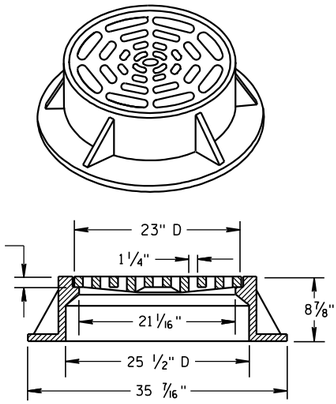

TYPE "C"

(APPROXIMATE WEIGHT 259 LBS.)

FRAME..... 152 LBS.
GRATE..... 107 LBS.

GENERAL NOTES

DETAILS OF CONSTRUCTION, MATERIALS AND WORKMANSHIP NOT SHOWN ON THIS DRAWING SHALL CONFORM TO THE PERTINENT REQUIREMENTS OF THE STANDARD SPECIFICATIONS AND THE APPLICABLE SPECIAL PROVISIONS.

DETAIL DRAWINGS FOR PROPOSED ALTERNATE DESIGNS FOR CATCH BASIN, MANHOLE AND INLET COVERS SHALL BE SUBMITTED TO THE ENGINEER FOR APPROVAL PROVIDING THAT SUCH ALTERNATE DESIGNS MAKE PROVISION FOR EQUIVALENT CAPACITY AND STRENGTH.

ROUND FRAMES AND COVERS SHALL HAVE CONTINUOUSLY MACHINED BEARING SURFACES TO PREVENT ROCKING AND RATTLING.

THE ACTUAL WEIGHT OF COVERS MAY VARY WITHIN 5 PERCENT, PLUS OR MINUS, OF THE APPROXIMATE WEIGHT.

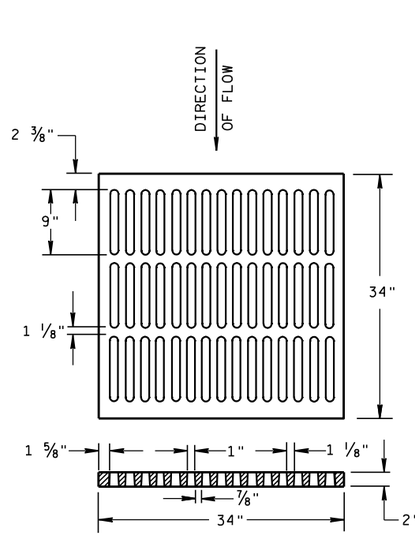

ALTERNATIVE TYPE "MS"

(APPROXIMATE GRATE WEIGHT 329 LBS.)

USE WHERE PEDESTRIAN OR BICYCLE TRAFFIC IS PERMITTED

NOTED AS TYPE MS-A ON THE DRAINAGE TABLE

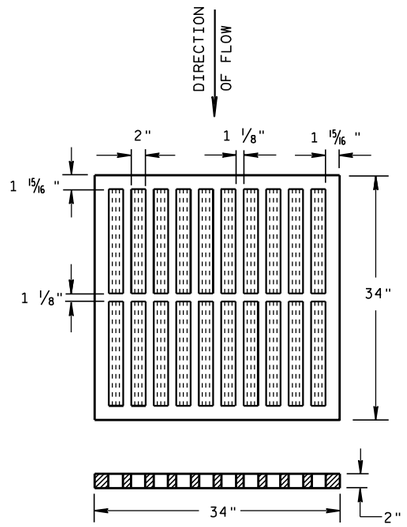

TYPE "MS"

(APPROXIMATE GRATE WEIGHT 268 LBS.)

USE ON FREEWAYS AND EXPRESSWAYS

NOTED AS TYPE MS ON DRAINAGE TABLE

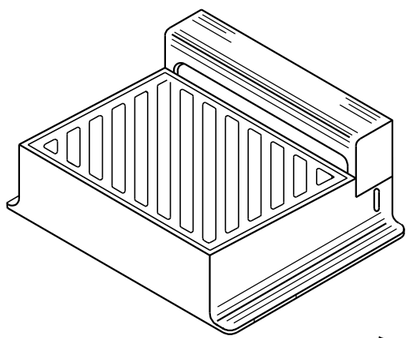

DIRECTION OF FLOW

DIAGONAL SLOTS, SHALL BE ORIENTED TO THE DIRECTION OF FLOW AS ILLUSTRATED. GRATES ARE MANUFACTURED TO BE REVERSIBLE.

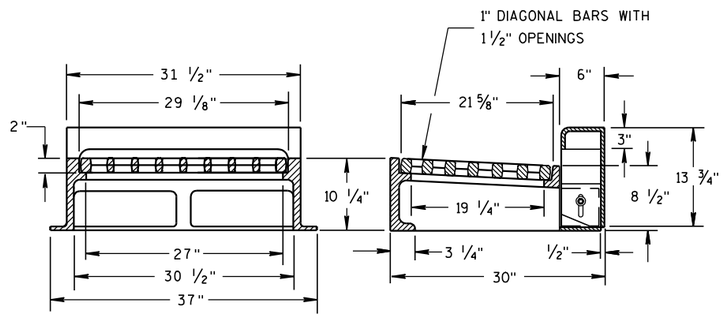

NOTE: CURB BOX HEIGHT ADJUSTABLE 6" TO 9"

TYPE "WM"

(APPROXIMATE WEIGHT 648 LBS.)

FRAME..... 355 LBS.
GRATE..... 156 LBS.
CURB BOX..... 137 LBS.

INLET COVERS
TYPE B, B-A, C, MS, MS-A, & WM

STATE OF WISCONSIN
DEPARTMENT OF TRANSPORTATION

APPROVED

6/5/2012 — DATE

/S/ Jerry H. [illegible] — ROADWAY STANDARDS ENGINEER

71

ENT

FHWA

6

S.D.D. 8 A 5-18b

6

S.D.D. 8 A 5-18b

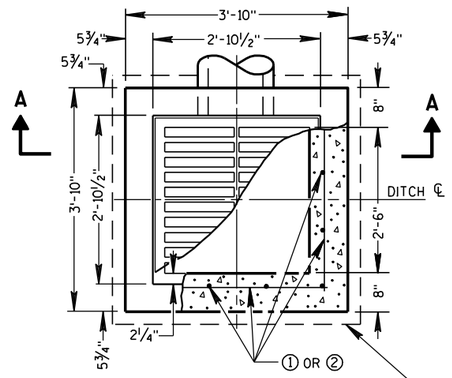

PLAN VIEW

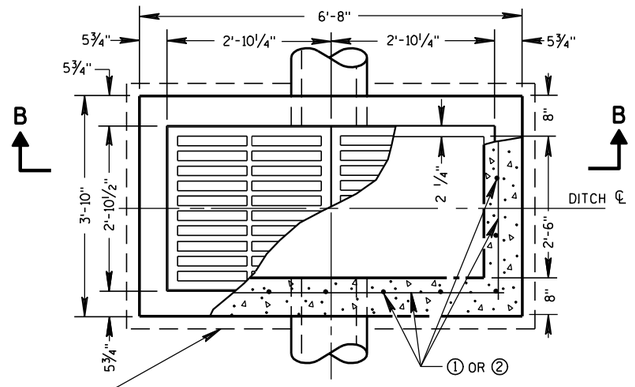

PLAN VIEW

4" OVERHANGING BASE ON REINFORCED CAST-IN-PLACE CONCRETE INLETS

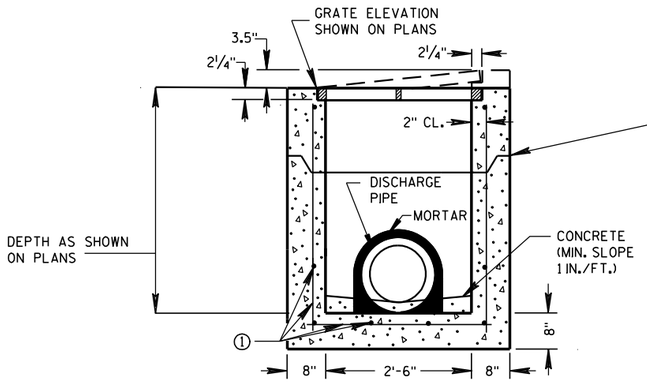

PRECAST REINFORCED CONCRETE SECTION A-A

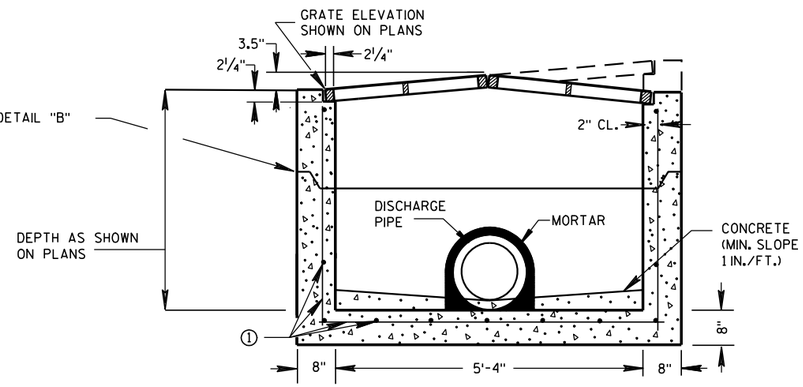

PRECAST REINFORCED CONCRETE SECTION B-B

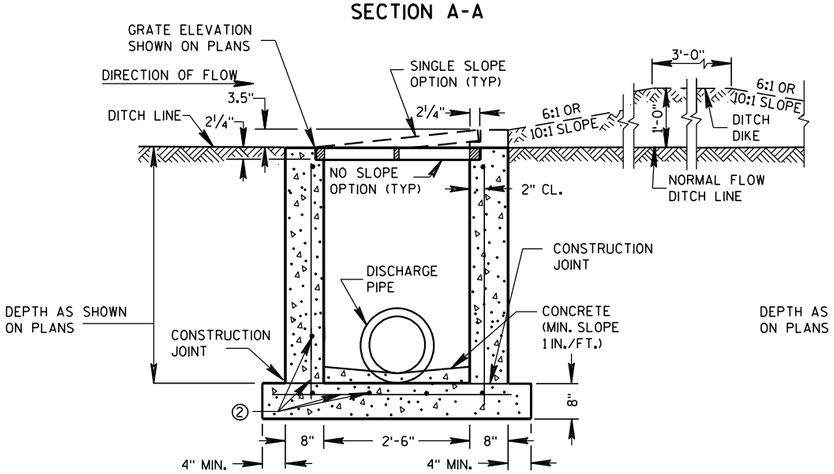

REINFORCED CAST-IN-PLACE CONCRETE SECTION A-A

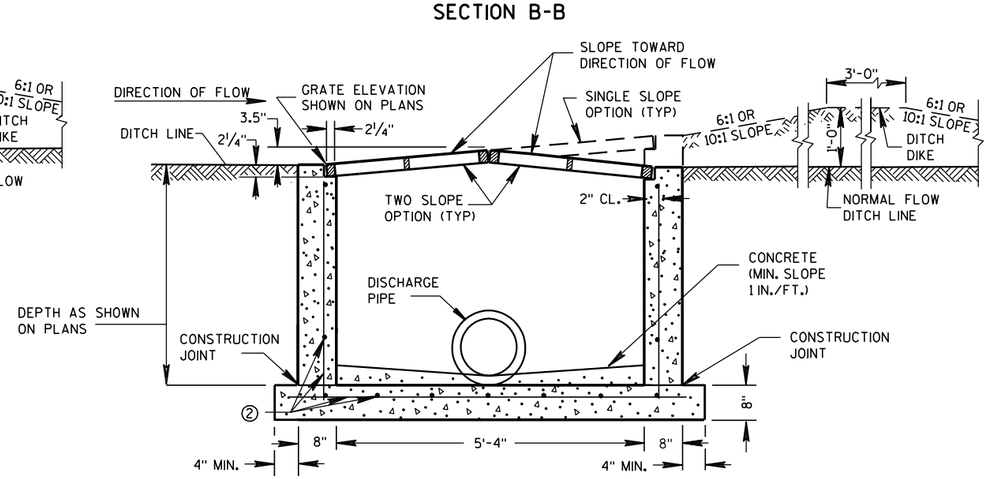

REINFORCED CAST-IN-PLACE CONCRETE SECTION B-B

INLETS MEDIAN 1 GRATE

INLETS MEDIAN 2 GRATE

GENERAL NOTES

DETAILS OF CONSTRUCTION, MATERIALS AND WORKMANSHIP NOT SHOWN ON THIS DRAWING SHALL CONFORM TO THE PERTINENT REQUIREMENTS OF THE STANDARD SPECIFICATIONS AND THE APPLICABLE SPECIAL PROVISIONS.

UNLESS OTHERWISE AUTHORIZED IN WRITING BY THE ENGINEER, THE CONTRACTOR SHALL NOT ORDER AND DELIVER PRECAST INLET UNITS REQUIRED FOR THE PROJECT UNTIL A LIST OF SIZES IS FURNISHED BY THE ENGINEER.

DETAILED DRAWINGS FOR PROPOSED ALTERNATE DESIGNS FOR INLETS WHICH MAY INCLUDE PRECAST REINFORCED CONCRETE INLETS, SHALL BE SUBMITTED TO THE ENGINEER FOR APPROVAL PROVIDING THAT SUCH ALTERNATE DESIGNS MAKE PROVISION FOR EQUIVALENT CAPACITY AND STRENGTH.

ALL MEDIAN INLETS ARE DESIGNATED ON THE PLANS AS "INLETS, 1G-MS", ETC. THE FIRST NUMBER AND LETTER DESIGNATE THE TYPE OF STRUCTURE, AND THE FOLLOWING LETTERS DESIGNATE THE TYPE OF COVER TO BE USED TO COMPRISE THE COMPLETE UNIT.

ALL BAR STEEL REINFORCEMENT SHALL BE EMBEDDED 2 INCHES CLEAR UNLESS OTHERWISE SHOWN OR NOTED.

PRECAST REINFORCED RISERS SHALL HAVE A TONGUE AND GROOVE JOINT WITH TONGUE UP OR DOWN.

ALL PRECAST INLET UNITS SHALL CONFORM TO THE PERTINENT REQUIREMENTS OF ASTM C 913.

MAXIMUM INSIDE PIPE DIAMETER DETERMINED BY 3" CLEARANCE ON EACH SIDE OF THE OUTSIDE WALL OF THE PIPE. SEE DETAIL "A". ASSUMES PIPE ENTERS PERPENDICULAR TO THE STRUCTURE.

① FOR PRECAST INLETS PROVIDE REINFORCING STEEL IN ACCORDANCE TO ASTM C 913.

② CONTRACTOR TO PROVIDE DRAWING(S) STAMPED BY A PROFESSIONAL ENGINEER FOR STEEL REINFORCING DESIGN FOR CAST-IN-PLACE STRUCTURES.

PIPE MATRIX

	MAXIMUM INSIDE PIPE DIAMETER	
INLET SIZE	WIDTH (IN)	LENGTH (IN)
1 GRATE	18	18
2 GRATE	18	42

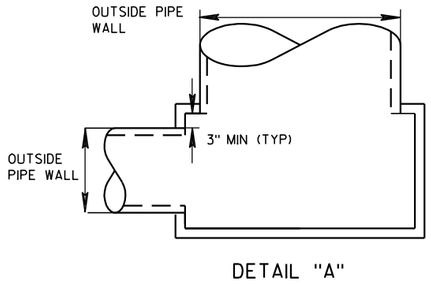

DETAIL "A"

JOINTS TO BE SEALED WITH A BUTYL RUBBER SEAL PER SEALANT MANUFACTURERS RECOMMENDATIONS CONFORMING TO ASTM C 990 (TYP)

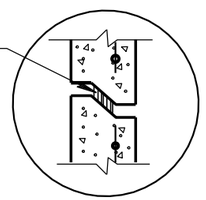

DETAIL "B"

INLETS MEDIAN 1 AND 2 GRATE

STATE OF WISCONSIN
DEPARTMENT OF TRANSPORTATION

APPROVED

6/5/2012
DATE

/S/ Jerry H. Zogg
ROADWAY STANDARDS DEVELOPMENT ENGINEER

FHWA

S.D.D. 8 C 8-1

S.D.D. 8 C 8-1

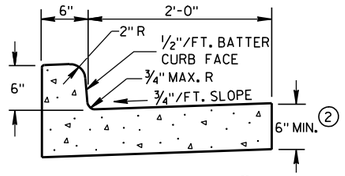

TYPES A & D (1)

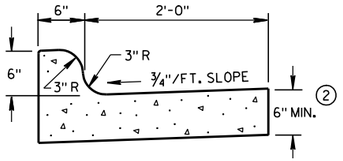

TYPES K & L (1)

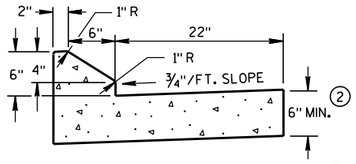

6" SLOPED CURB TYPES G & J (1)

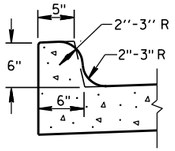

OPTIONAL CURB SHAPE FOR TYPES K & L (1)

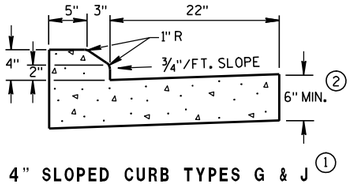

4" SLOPED CURB TYPES G & J (1)

CONCRETE CURB & GUTTER 30"

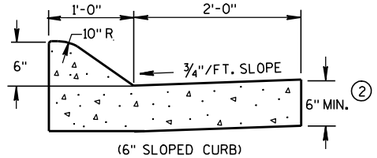

(6" SLOPED CURB)

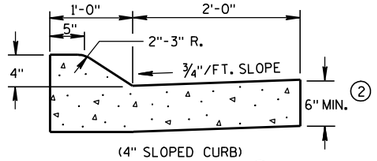

(4" SLOPED CURB)

TYPES A & D (1)

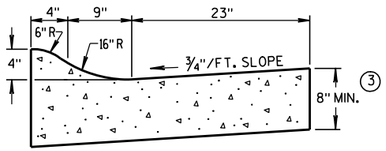

4" SLOPED CURB TYPES R & T (1) (4)

CONCRETE CURB & GUTTER 36"

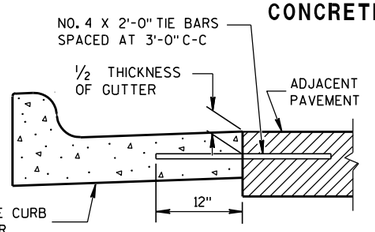

TYPICAL TIE BAR LOCATION (1)

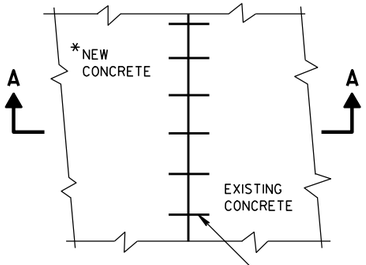

*NEW CURB & GUTTER, SURFACE DRAINS, CONCRETE PAVEMENT OR OTHER NEW CONCRETE.

PLAN VIEW

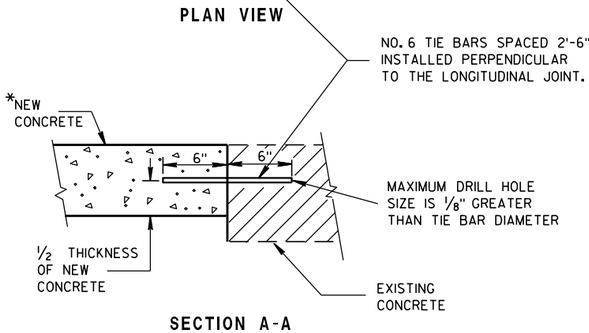

SECTION A-A

TIE BARS DRILLED INTO EXISTING PAVEMENT

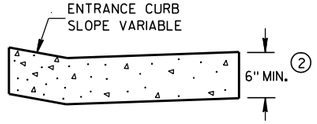

DRIVEWAY ENTRANCE CURB
(WHEN DIRECTED BY THE ENGINEER)

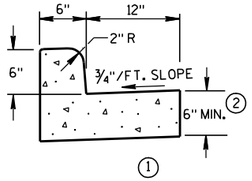

(1)
TYPES A & D
CONCRETE CURB & GUTTER 18"

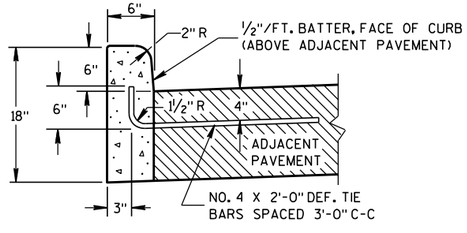

(1)
TYPES A & D

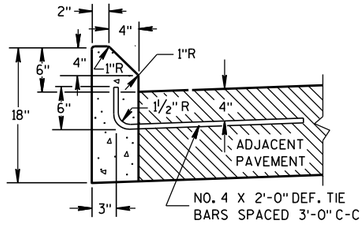

(1)
TYPES G & J

CONCRETE CURB

GENERAL NOTES

DETAILS OF CONSTRUCTION, MATERIALS AND WORKMANSHIP NOT SHOWN ON THIS DRAWING SHALL CONFORM TO THE PERTINENT REQUIREMENTS OF THE CONTRACT.

PAVEMENT TIES AND TIE BARS SHALL BE EPOXY COATED IN CONFORMANCE WITH SUBSECTION 505.2.6.2 OF THE STANDARD SPECIFICATIONS.

INTEGRAL CURB & GUTTER SHALL CONFORM TO THE DETAILS SHOWN FOR CONCRETE CURB & GUTTER INCLUDING THE TRANSVERSE GUTTER SLOPE. A LONGITUDINAL CONSTRUCTION JOINT IS NOT REQUIRED WITH INTEGRAL CURB AND GUTTER.

WHERE THE TRANSVERSE JOINTS IN THE PAVEMENT ARE REQUIRED TO BE SEALED, THE JOINTS IN THE INTEGRAL CURB AND GUTTER SHALL BE SEALED TO THE FACE OF CURB WITH THE SAME TYPE OF SEALANT. THE COST OF FURNISHING AND INSTALLING THIS SEALANT SHALL BE INCIDENTAL TO THE ITEM CONCRETE CURB AND GUTTER.

UNLESS OTHERWISE SHOWN ON THE TYPICAL CROSS SECTIONS, THE BASE AGGREGATE AND COMMON EXCAVATION LIMITS ARE 2'-0" BEHIND THE BACK OF CURBS.

(1) TIE BARS ARE REQUIRED FOR CURB AND GUTTER TYPES A, G, K AND R.

(2) THE BOTTOM OF CURB AND GUTTER MAY BE CONSTRUCTED EITHER LEVEL OR PARALLEL TO THE SLOPE OF THE SUBGRADE OR BASE AGGREGATE PROVIDED A 6" MINIMUM GUTTER THICKNESS IS MAINTAINED.

(3) THE BOTTOM OF CURB AND GUTTER MAY BE CONSTRUCTED EITHER LEVEL OR PARALLEL TO THE SLOPE OF THE SUBGRADE OR BASE AGGREGATE PROVIDED A 8" MINIMUM GUTTER THICKNESS IS MAINTAINED.

(4) THE FACE OF CURB IS 6" FROM THE BACK OF CURB.

(5) WHEN REVERSE SLOPE GUTTER IS REQUIRED, THE LOCATION(S) WILL BE SHOWN ELSEWHERE IN THE PLAN.

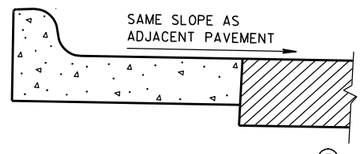

REVERSE SLOPE GUTTER (5)
(TYPICAL FOR ALL CURB & GUTTER TYPES)

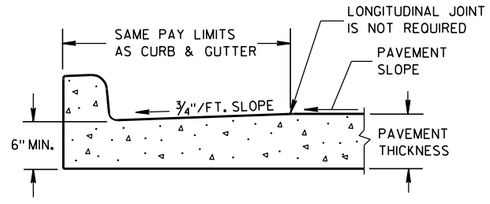

PARTIAL SECTION OF PAVEMENT WITH INTEGRAL CURB & GUTTER

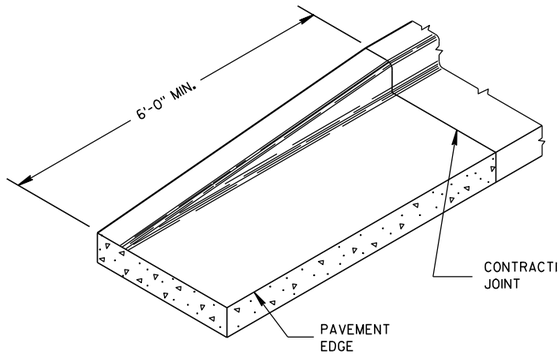

END SECTION CURB & GUTTER

CONCRETE CURB, CONCRETE CURB & GUTTER AND TIES

STATE OF WISCONSIN
DEPARTMENT OF TRANSPORTATION

APPROVED
9/4/08 DATE
/S/ Jerry H. [illegible]
ROADWAY STANDARDS ENGINEER
FHWA

6

S.D.D. 8 D 1-17

ASPHALTIC FLUME

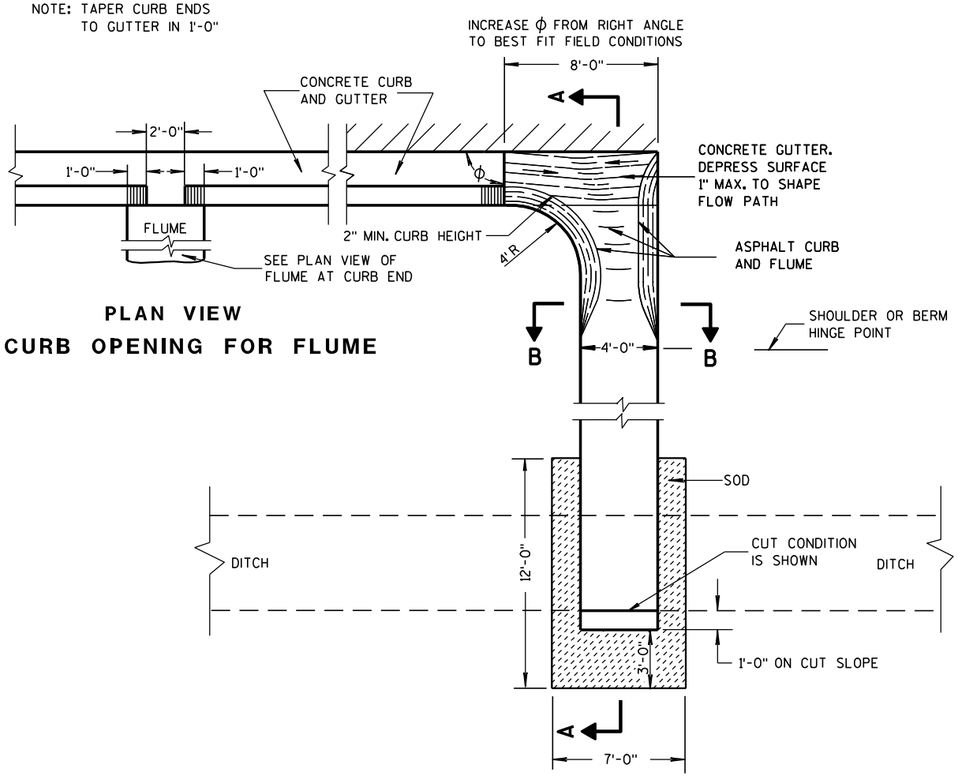

PLAN VIEW
CURB OPENING FOR FLUME

PLAN VIEW
FLUME AT CURB END

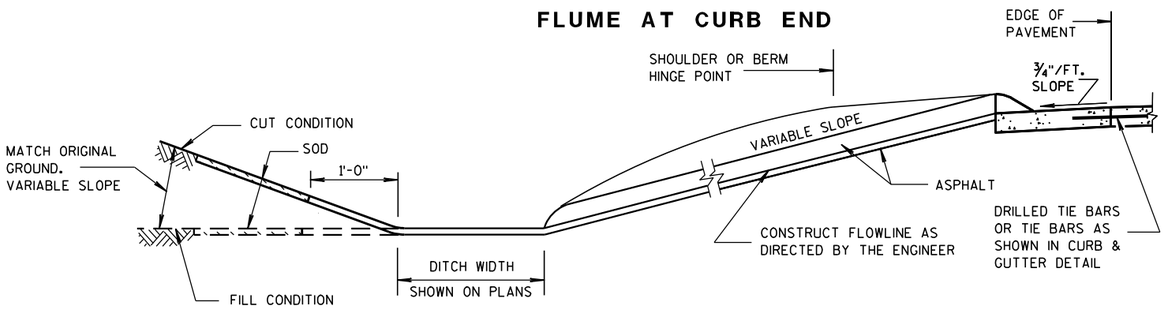

SECTION A-A

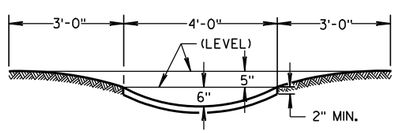

SECTION B-B

GENERAL NOTES

DETAILS OF CONSTRUCTION, MATERIALS AND WORKMANSHIP NOT SHOWN ON THIS DRAWING SHALL CONFORM TO PERTINENT REQUIREMENTS OF THE STANDARD SPECIFICATIONS AND APPLICABLE SPECIAL PROVISIONS.

WELDED STEEL WIRE FABRIC SHALL BE IN ACCORDANCE WITH AASHTO SPECIFICATION M55.

① JOINTS SHALL BE ⅛ TO ¼ INCH WIDE BY 1½ INCHES DEEP AND SPACED AT UNIFORM INTERVALS OF APPROXIMATELY 4 FEET.

② GEOTEXTILE FABRIC TYPE "R" SHALL UNDERLAY THE FULL LENGTH AND WIDTH OF THE CONCRETE SURFACE DRAIN AND RIPRAP.

③ CONCRETE SURFACE DRAIN WITHOUT CURB AND GUTTER MAY BE USED ON BACKSLOPES WHEN SPECIFIED

③ CONCRETE SURFACE DRAIN

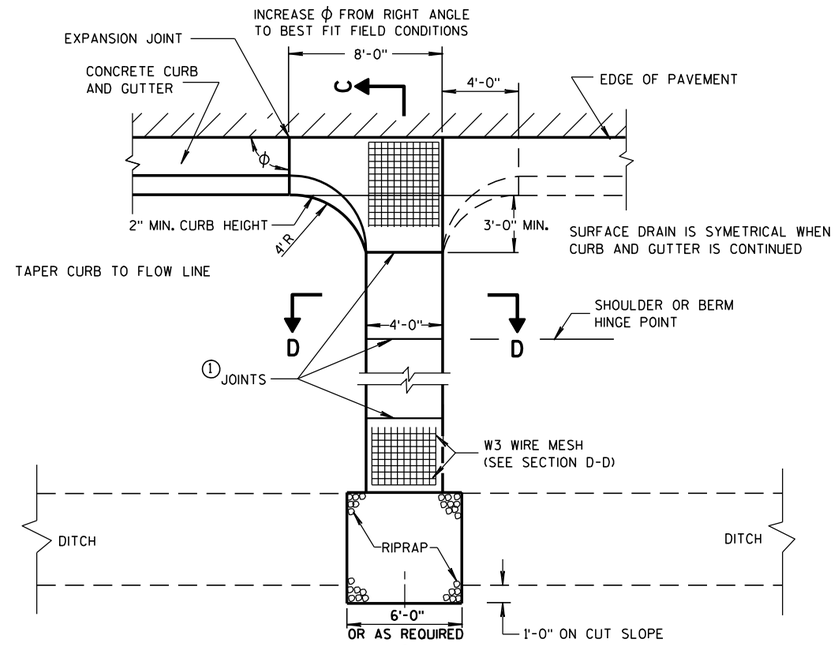

PLAN VIEW

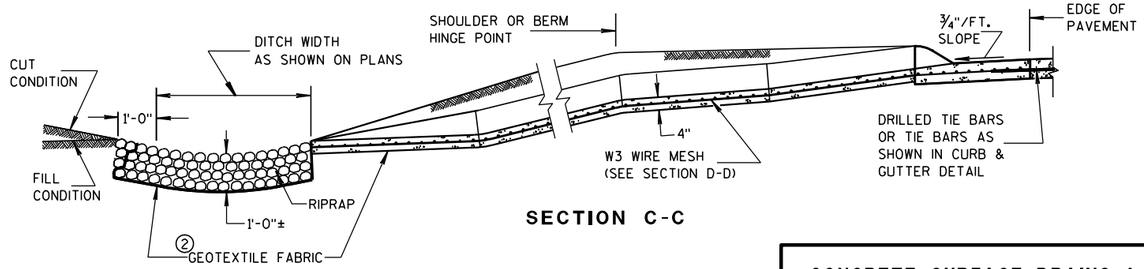

SECTION C-C

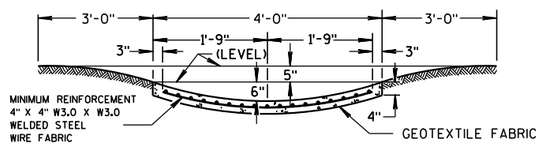

SECTION D-D

CONCRETE SURFACE DRAINS & ASPHALTIC FLUMES

STATE OF WISCONSIN
DEPARTMENT OF TRANSPORTATION

APPROVED
9-4-08 DATE
/S/ Jerry H. Zogg
ROADWAY STANDARDS ENGINEER
74
MENT
FHWA

6

S.D.D. 8 D 4-5

6

S.D.D. 8 D 4-5

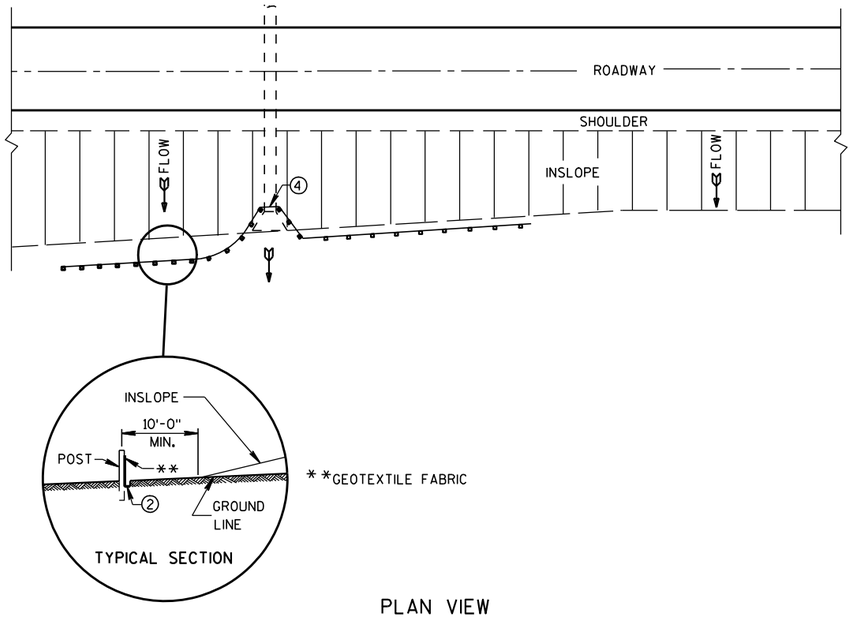

PLAN VIEW

TYPICAL APPLICATION OF SILT FENCE

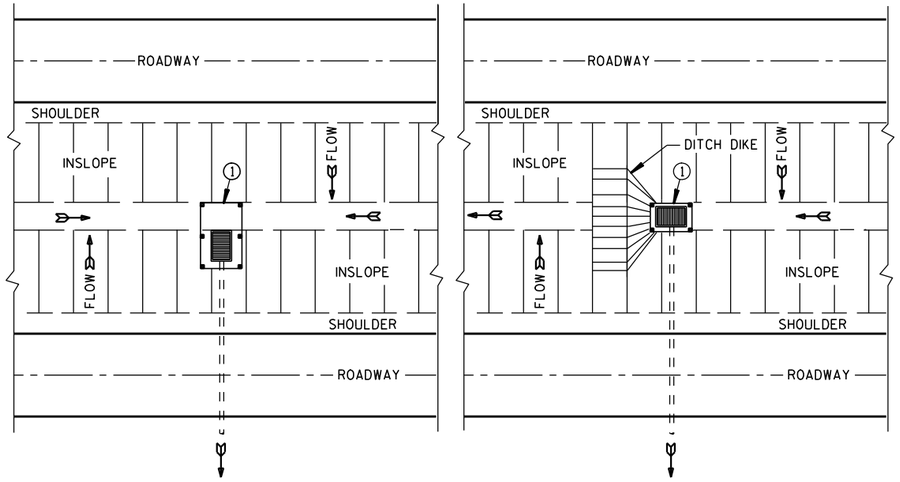

PLAN VIEW

SILT FENCE AT MEDIAN SURFACE DRAINS

GENERAL NOTES

DETAILS OF CONSTRUCTION NOT SHOWN ON THIS DRAWING SHALL CONFORM TO THE PERTINENT REQUIREMENTS OF THE STANDARD SPECIFICATIONS AND APPLICABLE SPECIAL PROVISIONS.

1. HORIZONTAL BRACE REQUIRED WITH 2" X 4" WOODEN FRAME OR EQUIVALENT AT TOP OF POSTS.
2. FOR MANUAL INSTALLATIONS THE TRENCH SHALL BE A MINIMUM OF 4" WIDE & 6" DEEP TO BURY AND ANCHOR THE GEOTEXTILE FABRIC. FOLD MATERIAL TO FIT TRENCH AND BACKFILL & COMPACT TRENCH WITH EXCAVATED SOIL.
3. WOOD POSTS SHALL BE A MINIMUM SIZE OF 1⅛" X 1⅛" OF OAK OR HICKORY.
4. SILT FENCE TO EXTEND ACROSS THE TOP OF THE PIPE.
5. CONSTRUCT SILT FENCE FROM A CONTINUOUS ROLL IF POSSIBLE BY CUTTING LENGTHS TO AVOID JOINTS. IF A JOINT IS NECESSARY USE ONE OF THE FOLLOWING TWO METHODS; A) OVERLAP THE END POSTS AND TWIST, OR ROTATE, AT LEAST 180 DEGREES, B) HOOK THE END OF EACH SILT FENCE LENGTH.

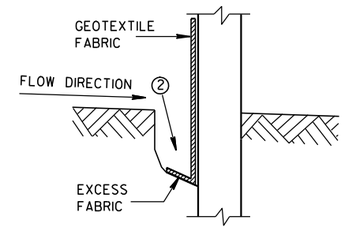

TRENCH DETAIL

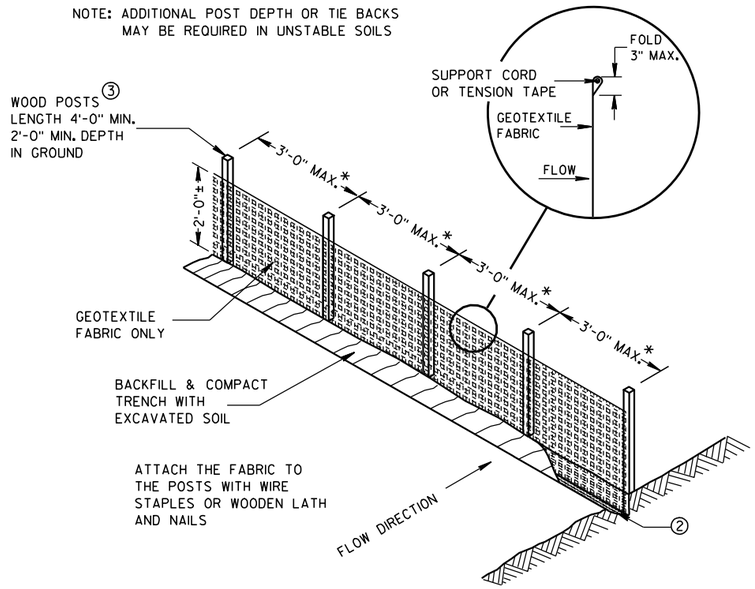

SILT FENCE

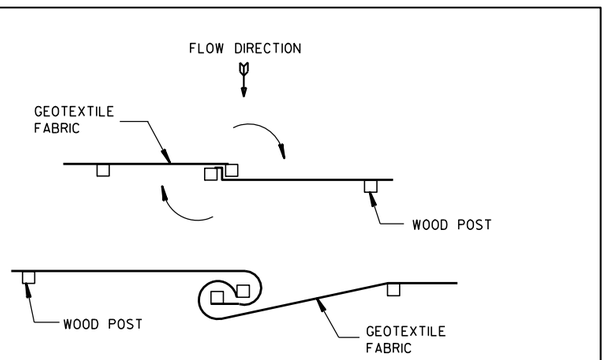

TWIST METHOD

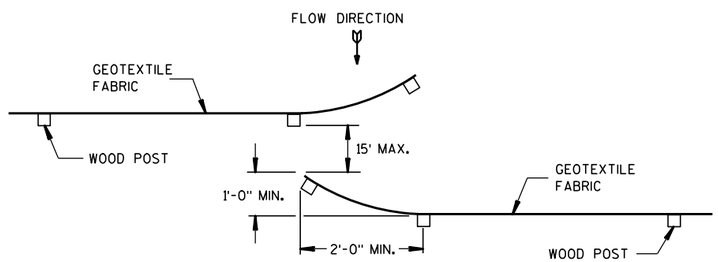

HOOK METHOD

JOINING TWO LENGTHS OF SILT FENCE 5

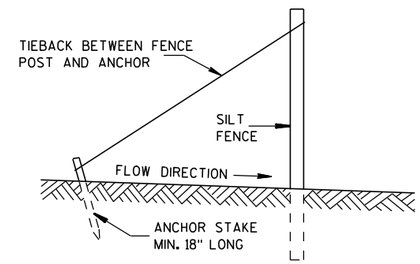

SILT FENCE TIE BACK

(WHEN REQUIRED BY THE ENGINEER)

SILT FENCE

STATE OF WISCONSIN
DEPARTMENT OF TRANSPORTATION

APPROVED
4-29-05 DATE
/S/ Beth Cannestra
CHIEF ROADWAY DEVELOPMENT ENGINEER
FHWA

6

S.D.D. 8 E 9-6

6

S.D.D. 8 E 9-6

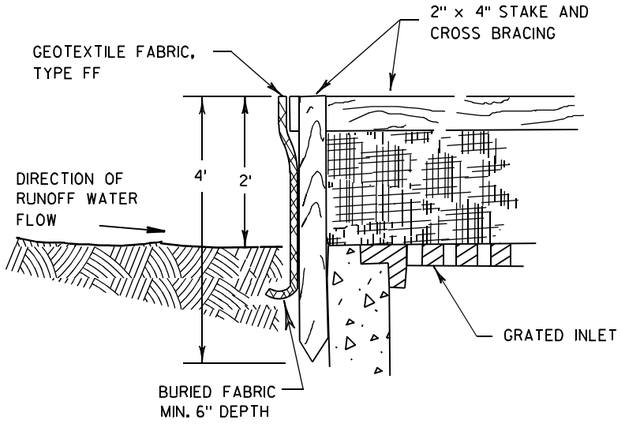

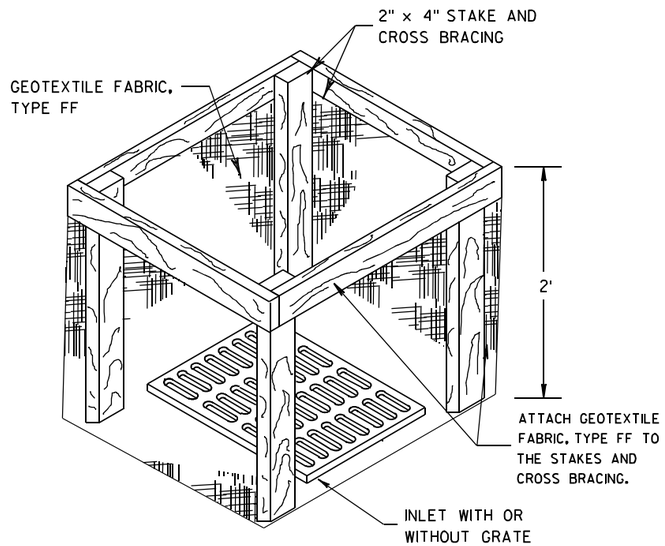

INLET PROTECTION, TYPE A

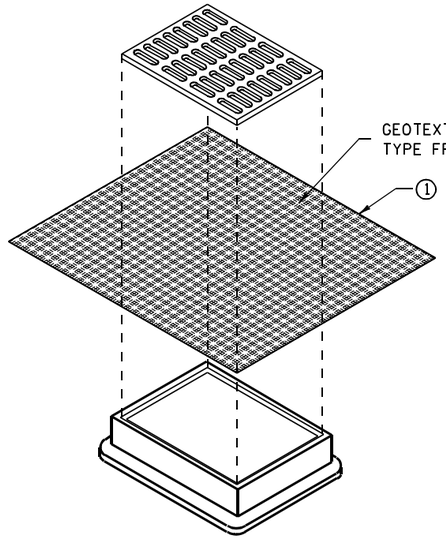

INLET PROTECTION, TYPE B
(WITHOUT CURB BOX)

(CAN BE INSTALLED IN ANY INLET WITHOUT A CURB BOX)

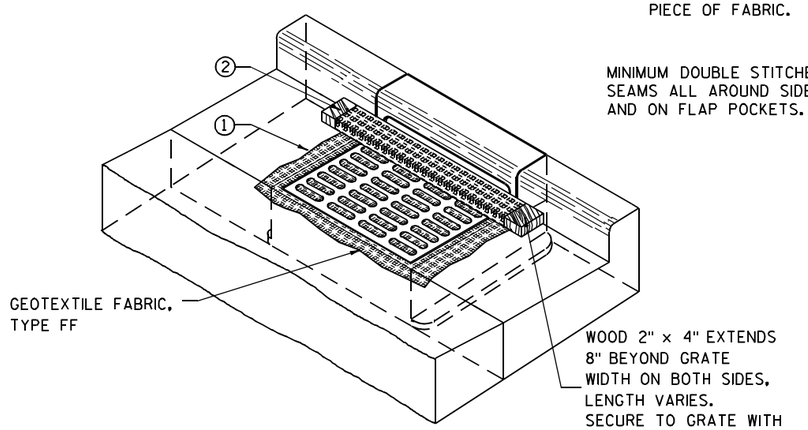

INLET PROTECTION, TYPE C (WITH CURB BOX)

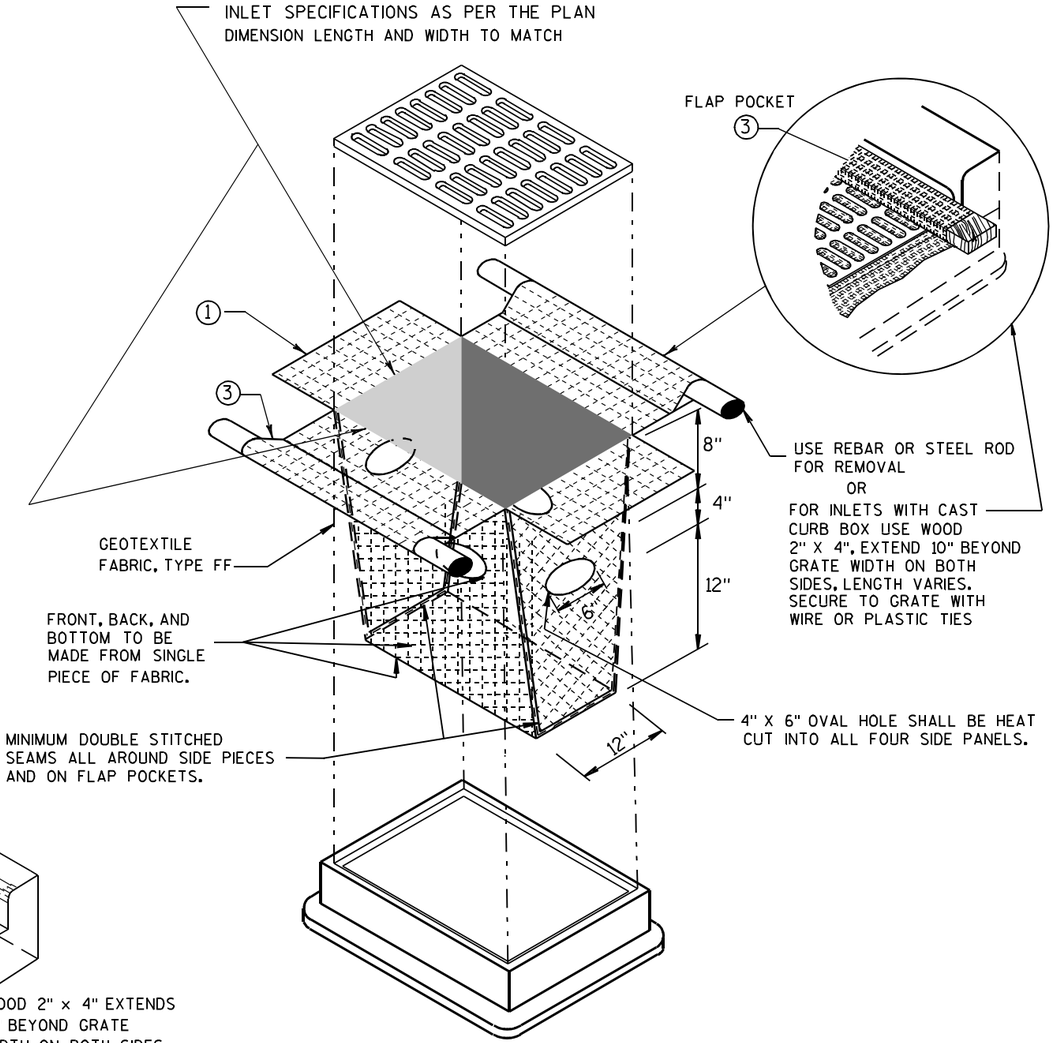

INLET PROTECTION, TYPE D

(CAN BE INSTALLED IN ANY INLET TYPE WITH
OR WITHOUT A CURB BOX AS PER NOTE ②)

GENERAL NOTES

INLET PROTECTION DEVICES SHALL BE MAINTAINED OR REPLACED AT THE DIRECTION OF THE ENGINEER.

MANUFACTURED ALTERNATIVES APPROVED AND LISTED ON THE DEPARTMENT'S EROSION CONTROL PRODUCT ACCEPTABILITY LIST MAY BE SUBSTITUTED.

WHEN REMOVING OR MAINTAINING INLET PROTECTION, CARE SHALL BE TAKEN SO THAT THE SEDIMENT TRAPPED ON THE GEOTEXTILE FABRIC DOES NOT FALL INTO THE INLET. ANY MATERIAL FALLING INTO THE INLET SHALL BE REMOVED IMMEDIATELY.

① FINISHED SIZE, INCLUDING FLAP POCKETS WHERE REQUIRED, SHALL EXTEND A MINIMUM OF 10" AROUND THE PERIMETER TO FACILITATE MAINTENANCE OR REMOVAL.

② FOR INLET PROTECTION, TYPE C (WITH CURB BOX), AN ADDITIONAL 18" OF FABRIC IS WRAPPED AROUND THE WOOD AND SECURED WITH STAPLES. THE WOOD SHALL NOT BLOCK THE ENTIRE HEIGHT OF THE CURB BOX OPENING.

③ FLAP POCKETS SHALL BE LARGE ENOUGH TO ACCEPT WOOD 2X4.

INSTALLATION NOTES

TYPE B & C

TRIM EXCESS FABRIC IN THE FLOW LINE TO WITHIN 3" OF THE GRATE.

THE CONTRACTOR SHALL DEMONSTRATE A METHOD OF MAINTENANCE, USING A SEWN FLAP, HAND HOLDS OR OTHER METHOD TO PREVENT ACCUMULATED SEDIMENT FROM ENTERING THE INLET.

TYPE D

DO NOT INSTALL INLET PROTECTION TYPE D IN INLETS SHALLOWER THAN 30", MEASURED FROM THE BOTTOM OF THE INLET TO THE TOP OF THE GRATE.

TRIM EXCESS FABRIC IN THE FLOW LINE TO WITHIN 3" OF THE GRATE.

THE INSTALLED BAG SHALL HAVE A MINIMUM SIDE CLEARANCE, BETWEEN THE INLET WALLS AND THE BAG, MEASURED AT THE BOTTOM OF THE OVERFLOW HOLES, OF 3". WHERE NECESSARY THE CONTRACTOR SHALL CINCH THE BAG, USING PLASTIC ZIP TIES, TO ACHIEVE THE 3" CLEARANCE. THE TIES SHALL BE PLACED AT A MAXIMUM OF 4" FROM THE BOTTOM OF THE BAG.

INLET PROTECTION
TYPE A, B, C, AND D

STATE OF WISCONSIN
DEPARTMENT OF TRANSPORTATION

APPROVED

10/16/02
DATE

/S/ Beth Cannestra
CHIEF ROADWAY DEVELOPMENT ENGINEER

FHWA

6
S.D.D. 8 E 10-2

METAL APRON ENDWALLS

PIPE DIA. (IN.)	MIN. THICK. (Inches) STEEL	MIN. THICK. (Inches) ALUM.	DIMENSIONS (Inches) A (±1")	B (MAX.)	H (±1")	L (±1 1/2")	L1 ①	L2 ①	W (±2")	APPROX. SLOPE	BODY
12	.064	.060	6	6	6	21	12	17 1/2	24	2 1/2 to 1	1 Pc.
15	.064	.060	7	8	6	26	14	21 3/4	30	2 1/2 to 1	1 Pc.
18	.064	.060	8	10	6	31	15	28 1/4	36	2 1/2 to 1	1 Pc.
21	.064	.060	9	12	6	36	18	29 5/8	42	2 1/2 to 1	1 Pc.
24	.064	.075	10	13	6	41	18	37 1/4	48	2 1/2 to 1	1 Pc.
30	.079	.075	12	16	8	51	18	52 1/4	60	2 1/2 to 1	1 Pc.
36	.079	.105	14	19	9	60	24	59 3/4	72	2 1/2 to 1	2 Pc.
42	.109	.105	16	22	11	69	24	75 5/8	84	2 1/2 to 1	2 Pc.
48	.109	.105	18	27	12	78	24	81	90	2 1/4 to 1	3 Pc.
54	.109	.105	18	30	12	84	30	85 1/2	102	2 1/4 to 1	3 Pc.
60	.109×	.105×	18	33	12	87	—	—	114	2 to 1	3 Pc.
66	.109×	.105×	18	36	12	87	—	—	120	2 to 1	3 Pc.
72	.109×	.105×	18	39	12	87	—	—	126	2 to 1	3 Pc.
78	.109×	.105×	18	42	12	87	—	—	132	1 1/2 to 1	3 Pc.
84	.109×	.105×	18	45	12	87	—	—	138	1 1/2 to 1	3 Pc.
90	.109×	.105×	18	37	12	87	—	—	144	1 1/2 to 1	3 Pc.
96	.109×	.105×	18	35	12	87	—	—	150	1 1/2 to 1	3 Pc.

× EXCEPT CENTER PANEL SEE GENERAL NOTES

REINFORCED CONCRETE APRON ENDWALLS

PIPE DIA. (IN.)	DIMENSIONS (Inches) T	A	B	C	D	E	G	APPROX. SLOPE
12	2	4	24	48 7/8	72 1/8	24	2	3 to 1
15	2 1/4	6	27	46	73	30	2 1/4	3 to 1
18	2 1/2	9	27	46	73	36	2 1/2	3 to 1
21	2 3/4	9	36	37 1/2	73 1/2	42	2 3/4	3 to 1
24	3	9 1/2	43 1/2	30	73 1/2	48	3	3 to 1
27	3 1/4	10 1/2	49 1/2	24	73 1/2	54	3 1/4	3 to 1
30	3 1/2	12	54	19 3/4	73 1/2	60	3 1/2	3 to 1
36	4	15	63	34 3/4	97 3/4	72	4	3 to 1
42	4 1/2	21	63	35	98	78	4 1/2	3 to 1
48	5	24	72	26	98	84	5	3 to 1
54	5 1/2	27	65	* 33 1/4 - ** 35	* 98 1/4 - ** 100	90	5 1/2	2 2/5 to 1
60	6	* 30 - ** 35	60	39	99	96	5	2 to 1
66	6 1/2	* 24 - ** 30	* 72 - ** 78	* 21 - ** 27	99	102	5 1/2	2 to 1
72	7	* 24 - ** 36	78	21	99	108	6	2 to 1
78	7 1/2	* 24 - ** 36	78	21	99	114	6 1/2	2 to 1
84	8	36	90 1/2	21	111 1/2	120	6 1/2	1 1/2 to 1
90	8 1/2	41	87 1/2	24	111 1/2	132	6 1/2	1 1/2 to 1

*MINIMUM
**MAXIMUM

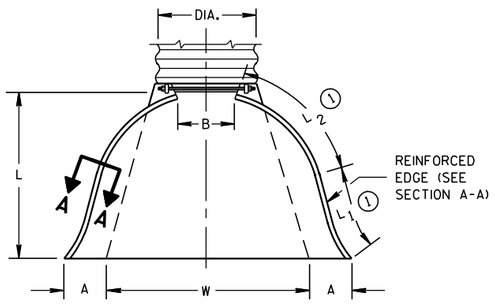

PLAN VIEW

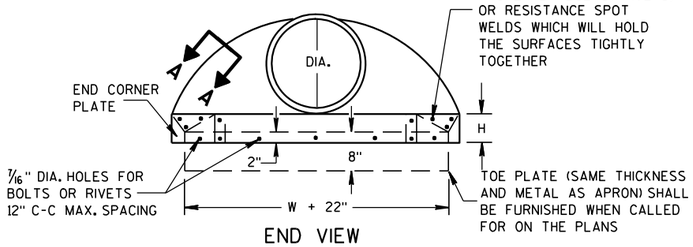

END VIEW

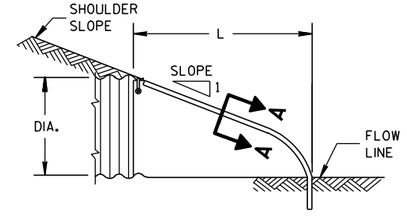

SIDE ELEVATION

METAL ENDWALLS

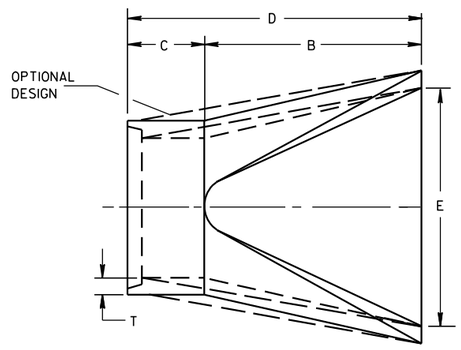

PLAN

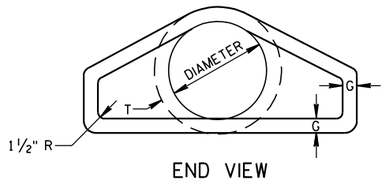

END VIEW

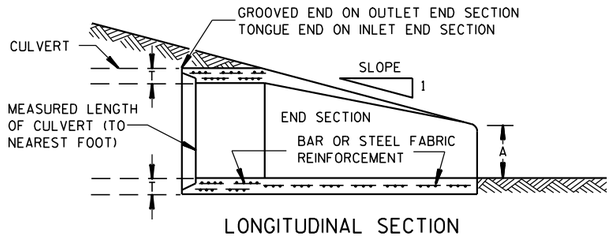

LONGITUDINAL SECTION

CONCRETE ENDWALLS

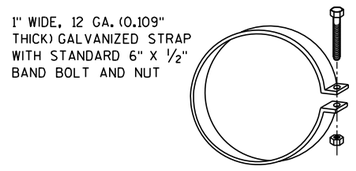

ALTERNATE FOR TYPE 1 CONNECTION

END SECTION CONNECTOR STRAP

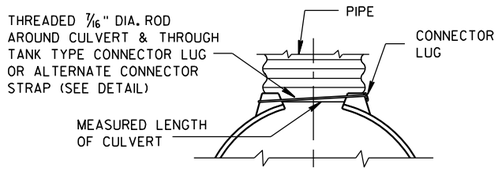

TYPE 1
FOR 12" THRU 24" CORR. PIPE

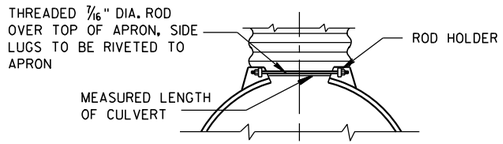

TYPE 2
FOR 30" THRU 96" CORR. PIPE

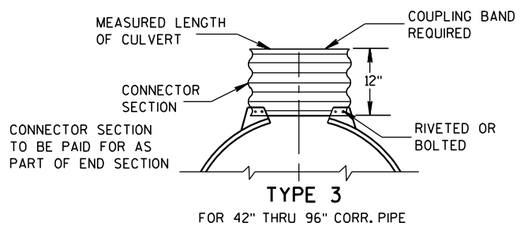

TYPE 3
FOR 42" THRU 96" CORR. PIPE

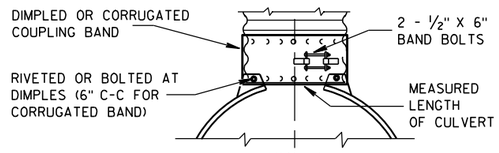

TYPE 5
ALTERNATE FOR:
ALL SIZES CORRUGATED CIRCULAR PIPE

NOTE: DIMPLED BAND FITS OVER OUTSIDE OF ENDWALL. AND CORRUGATED BAND FITS INSIDE ENDWALL. DIMPLED BAND MAY BE USED WITH HELICALLY CORRUGATED PIPE.

FOR CIRCUMFERENTIALLY CORRUGATED PIPE USE ENDWALL CONNECTION DETAILS 1, 2, 3 OR 5 AS APPLICABLE.

FOR HELICALLY CORRUGATED PIPE USE ENDWALL CONNECTION DETAILS 1, 2 OR 5.

FOR HELICALLY CORRUGATED PIPES WITH TWO CIRCUMFERENTIAL CORRUGATIONS AT EACH END USE ENDWALL CONNECTION DETAILS 1, 2 OR 3.

CONNECTION DETAILS

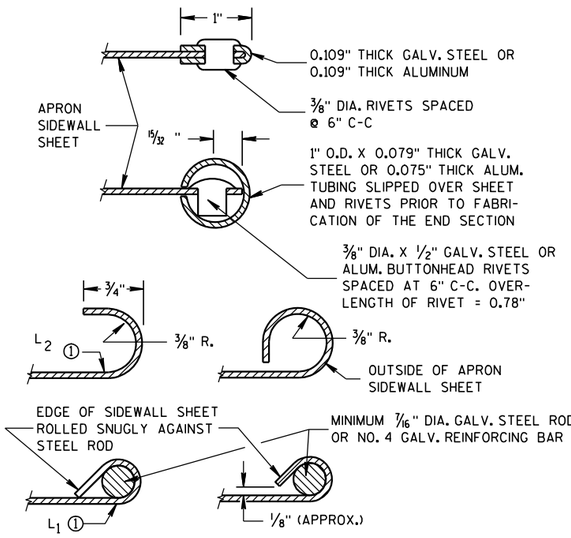

SECTION A-A

GENERAL NOTES

DETAILS OF CONSTRUCTION, MATERIALS AND WORKMANSHIP NOT SHOWN ON THIS DRAWING SHALL CONFORM TO THE PERTINENT REQUIREMENTS OF THE STANDARD SPECIFICATIONS AND THE APPLICABLE SPECIAL PROVISIONS.

CONCRETE CULVERT ENDWALLS MAY NOT BE USED WITH GALVANIZED STEEL OR ALUMINUM CULVERT PIPE OR VISE VERSA. GALVANIZED STEEL OR ALUMINUM ENDWALLS SHALL NORMALLY BE INSTALLED ON CULVERT PIPE OF THE SAME METAL.

ALL THREE PIECE STEEL APRON ENDWALLS FOR 60" DIAMETER PIPE AND LARGER SHALL HAVE 0.109" SIDES AND 0.138" CENTER PANELS. ALL THREE PIECE ALUMINUM APRON ENDWALLS FOR 60" DIAMETER PIPE AND LARGER SHALL HAVE 0.105" SIDES AND 0.134" CENTER PANELS. THE WIDTH OF CENTER PANELS SHALL BE GREATER THAN 20 PERCENT OF THE PIPE PERIMETER.

LAP SEAMS SHALL BE TIGHTLY JOINED BY GALVANIZED RIVETS OR BOLTS FOR STEEL UNITS AND ALUMINUM RIVETS AND BOLTS FOR ALUMINUM UNITS. FOR THE 60" THROUGH 96" DIAMETER APRON ENDWALL SIZES, THE REINFORCED EDGES AND CENTER PANEL SEAMS SHALL BE FURTHER REINFORCED WITH GALVANIZED STEEL OR ALUMINUM STIFFENER ANGLES. THE ANGLES SHALL BE ATTACHED BY GALVANIZED NUTS AND BOLTS FOR STEEL UNITS AND ALUMINUM NUTS AND BOLTS FOR ALUMINUM UNITS.

WHERE TWO OR MORE PIPES WITH APRON ENDWALLS ARE LAID ADJACENT TO EACH OTHER, THEY SHALL BE SEPARATED BY A DISTANCE SUFFICIENT TO PROVIDE A MINIMUM CLEARANCE OF 6 INCHES BETWEEN APRON ENDWALLS.

① FOR PIPE SIZES UP TO 60" DIAMETER, A 180° ROLLED EDGE MAY BE USED INSTEAD OF STEEL ROD REINFORCEMENT. SEE SECTION A-A.

APRON ENDWALLS FOR CULVERT PIPE

STATE OF WISCONSIN
DEPARTMENT OF TRANSPORTATION

APPROVED
11/30/94 DATE
/S/ Rory L. Rhinesmith
CHIEF ROADWAY DEVELOPMENT ENGINEER
FHWA

6
S.D.D. 8 F 1-11

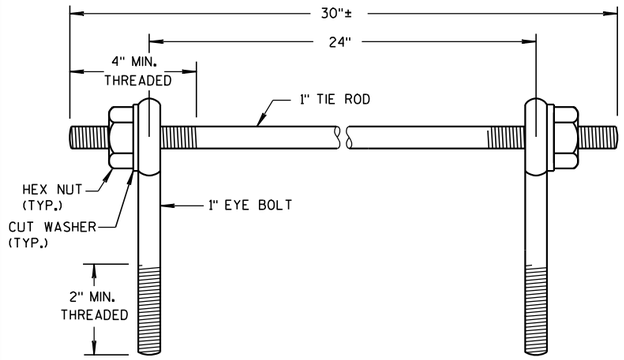

EYE BOLTS AND TIE ROD

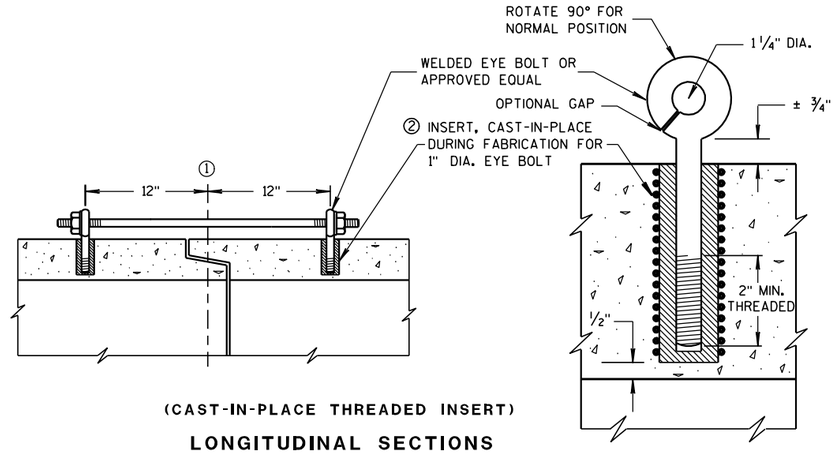

(CAST-IN-PLACE THREADED INSERT)

LONGITUDINAL SECTIONS

GENERAL NOTES

DETAILS OF CONSTRUCTION, MATERIALS, AND WORKMANSHIP NOT SHOWN ON THIS DRAWING SHALL CONFORM TO THE PERTINENT REQUIREMENTS OF THE STANDARD SPECIFICATIONS AND APPLICABLE SPECIAL PROVISIONS.

CONCRETE CULVERT PIPE SHALL BE TIED TOGETHER IN THE MANNER ILLUSTRATED BY THIS DETAIL AT LOCATIONS DESIGNATED ON THE PLAN. THE CONTRACTOR MAY USE EITHER ALTERNATE 1, 2 OR 3 FOR DRAINAGE STRUCTURES. ONLY ALTERNATE 1 AND 3 MAY BE USED FOR CATTLE PASSES. UNLESS OTHERWISE STATED IN THE CONTRACT THE MATERIALS, FABRICATION AND WORK NECESSARY TO TIE CULVERT PIPE AS INDICTED ON THE PLANS AND BY THIS DETAIL WILL BE CONSIDERED INCIDENTAL TO CILVERT PIPE, REINFORCED CONCRETE CULVERT PIPE, OR REINFORCED CONCRETE PIPE CATTLE PASS.

DETAILED DRAWINGS FOR PROPOSED ALTERNATE DESIGNS FOR JOINT TIES SHALL BE SUBMITTED TO THE ENGINEER FOR APPROVAL.

① ℄ OF TONGUE AND GROOVE OR BELL AND SPIGOT JOINTS.

② THE INSIDE OF THE THREADED INSERTS SHALL BE CLEAN TO ALLOW THE INSERTION OF THREADED EYE BOLTS.

③ HOLES SHALL BE CAST-IN-PLACE OR DRILLED 12 INCHES FROM ℄ OF TONGUE AND GROOVE.

④ BOLT PROJECTION INSIDE OF PIPE SHALL NOT EXCEED 2 INCHES.

⑤ OPENING TO BE ROD DIAMETER PLUS 1 INCH.

⑥ LENGTH ADEQUATE TO EXTEND TO WITHIN 1/2 INCH OF THE INNER SURFACE OF THE PIPE.

EYE BOLT AND TIE ROD ASSEMBLY (ALTERNATE NO. 1)

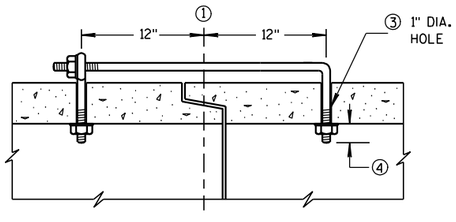

(TONGUE & GROOVE PIPE)

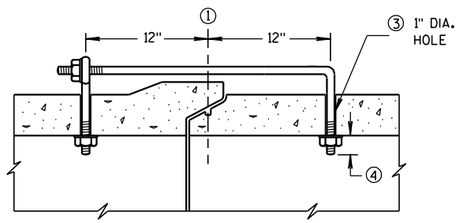

(MODIFIED BELL PIPE)

LONGITUDINAL SECTION

EYE BOLT DIMENSION TABLE

PIPE SIZE	L = LENGTH	
	TONGUE & GROOVE PIPE	MODIFIED BELL PIPE
18" TO 24"	4 1/2"	6 1/4"
30"	5"	7"
36"	5 1/2"	7"
42"	6"	
48"	6 1/2"	
60"	7 1/2"	
66"	8"	

ADJUSTABLE TIE ROD TABLE

PIPE DIAMETER	TIE ROD DIAMETER	D	L_1	N
12-60	5/8	5/8	5	1/2
66-84	3/4	3/4	5	1/2
90-108	1	1	7	1 7/16

DIMENSIONS SHOWN ARE IN INCHES

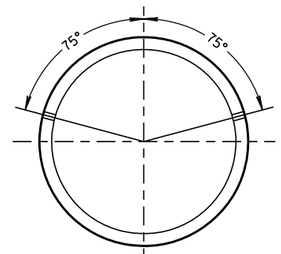

PLACEMENT OF (2) CAST-IN-PLACE INSERTS OR HOLES DURING FABRICATION FOR PIPE SECTIONS REQUIRING TIE RODS

TRANSVERSE SECTION

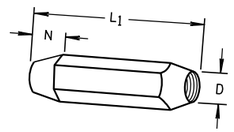

TAPERED

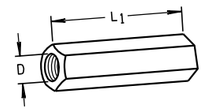

PLAIN

RIGHT AND LEFT THREADS

SLEEVE NUTS

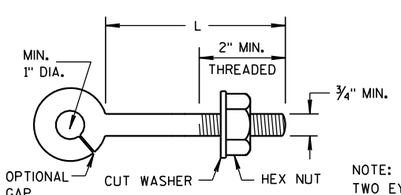

EYE BOLT

NOTE:
TWO EYE BOLTS MAY BE USED WITH A 30" LONG THREADED ROD IN LIEU OF THE 90° BENT TIE ROD.

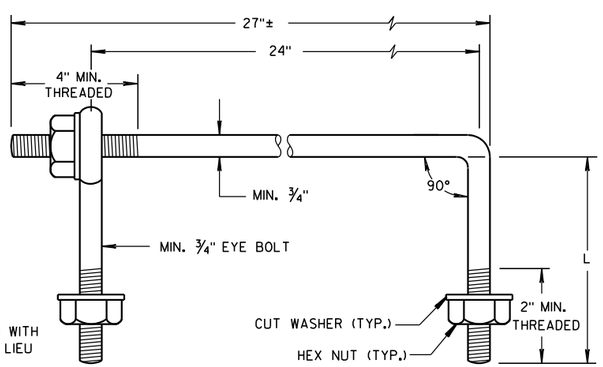

EYE BOLT AND TIE ROD

(JOINT TIES FOR 18" TO 66" DIA. CONCRETE PIPE)

EYE BOLT AND TIE ROD ASSEMBLY (ALTERNATE NO. 2)

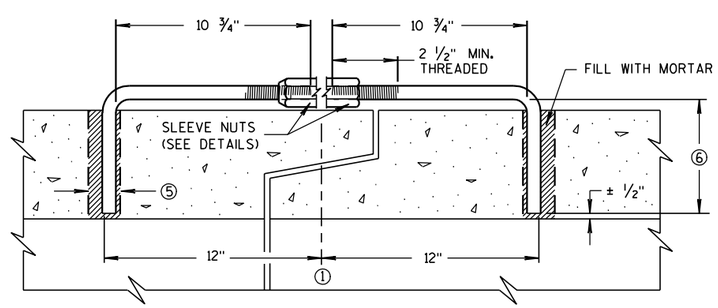

LONGITUDINAL SECTION

(JOINT TIES FOR 12" TO 108" DIA. CONCRETE PIPE)

ADJUSTABLE TIE ROD (ALTERNATE NO. 3)

JOINT TIES FOR CONCRETE PIPE

STATE OF WISCONSIN
DEPARTMENT OF TRANSPORTATION

APPROVED

12/17/07
DATE

/S/ Jerry H. Zogg
ROADWAY STANDARDS ENGINEER

FHWA

6

S.D.D. 8 F 4-6

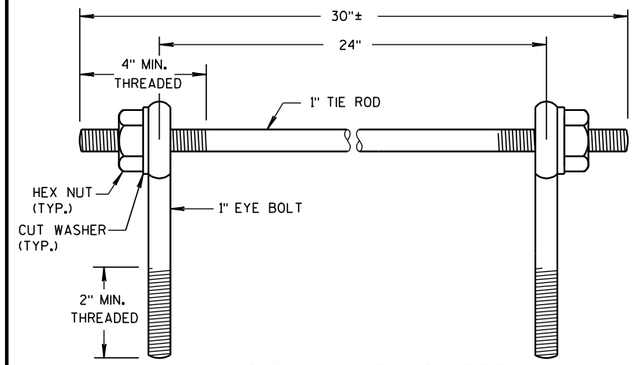

EYE BOLTS AND TIE ROD

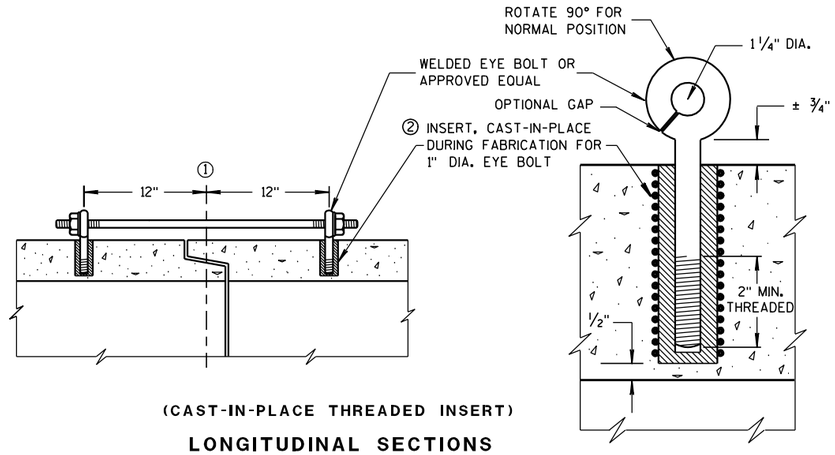

(CAST-IN-PLACE THREADED INSERT)

LONGITUDINAL SECTIONS

EYE BOLT AND TIE ROD ASSEMBLY (ALTERNATE NO. 1)

GENERAL NOTES

DETAILS OF CONSTRUCTION, MATERIALS, AND WORKMANSHIP NOT SHOWN ON THIS DRAWING SHALL CONFORM TO THE PERTINENT REQUIREMENTS OF THE STANDARD SPECIFICATIONS AND APPLICABLE SPECIAL PROVISIONS.

CONCRETE CULVERT AND STORM SEWER PIPE SHALL BE TIED TOGETHER IN THE MANNER ILLUSTRATED BY THIS DETAIL AT LOCATIONS DESIGNATED IN THE STANDARD SPECIFICATIONS AND THE PLAN. THE CONTRACTOR MAY USE EITHER ALTERNATE 1, 2 OR 3 FOR DRAINAGE STRUCTURES. ONLY ALTERNATE 1 AND 3 MAY BE USED FOR CATTLE PASSES, UNLESS OTHERWISE STATED IN THE CONTRACT. THE MATERIALS, FABRICATION AND WORK NECESSARY TO TIE THE PIPE BY THIS DETAIL WILL BE CONSIDERED INCIDENTAL TO THE PIPE AND APRON ENDWALLS IF REQUIRED.

DETAILED DRAWINGS FOR PROPOSED ALTERNATE DESIGNS FOR JOINT TIES SHALL BE SUBMITTED TO THE ENGINEER FOR APPROVAL.

JOINT TIES TO BE HOT-DIP GALVANIZED PER ASTM A 153.

① ℄ OF TONGUE AND GROOVE OR BELL AND SPIGOT JOINTS.

② THE INSIDE OF THE THREADED INSERTS SHALL BE CLEAN TO ALLOW THE INSERTION OF THREADED EYE BOLTS.

③ HOLES SHALL BE CAST-IN-PLACE OR DRILLED 12 INCHES FROM ℄ OF TONGUE AND GROOVE.

④ BOLT PROJECTION INSIDE OF PIPE SHALL NOT EXCEED 2 INCHES.

⑤ OPENING TO BE ROD DIAMETER PLUS 1 INCH.

⑥ LENGTH ADEQUATE TO EXTEND TO WITHIN 1/2 INCH OF THE INNER SURFACE OF THE PIPE.

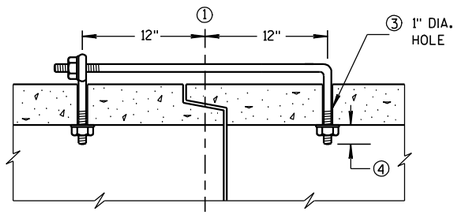

(TONGUE & GROOVE PIPE)

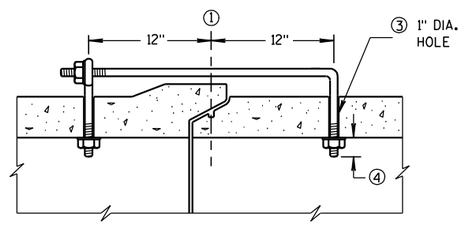

(MODIFIED BELL PIPE)

LONGITUDINAL SECTION

EYE BOLT DIMENSION TABLE

PIPE SIZE	L = LENGTH	
	TONGUE & GROOVE PIPE	MODIFIED BELL PIPE
18" TO 24"	4 1/2"	6 1/4"
30"	5"	7"
36"	5 1/2"	7"
42"	6"	
48"	6 1/2"	
60"	7 1/2"	
66"	8"	

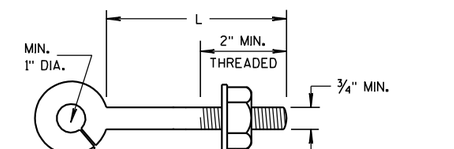

NOTE:

EYE BOLT

NOTE: TWO EYE BOLTS MAY BE USED WITH A 30" LONG THREADED ROD IN LIEU OF THE 90° BENT TIE ROD.

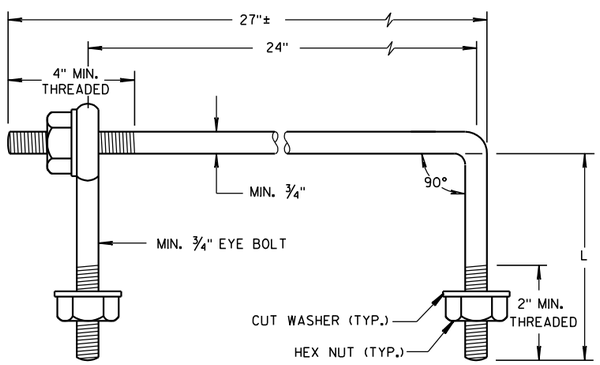

EYE BOLT AND TIE ROD

(JOINT TIES FOR 18" TO 66" DIA. CONCRETE PIPE)

EYE BOLT AND TIE ROD ASSEMBLY (ALTERNATE NO. 2)

ADJUSTABLE TIE ROD TABLE

PIPE DIAMETER	TIE ROD DIAMETER	D	L_1	N
12-60	5/8	5/8	5	1/2
66-84	3/4	3/4	5	1/2
90-108	1	1	7	1 1/16

DIMENSIONS SHOWN ARE IN INCHES

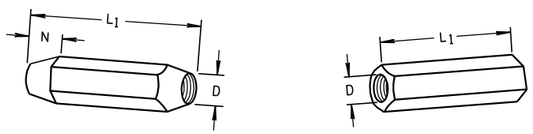

TAPERED PLAIN

RIGHT AND LEFT THREADS

SLEEVE NUTS

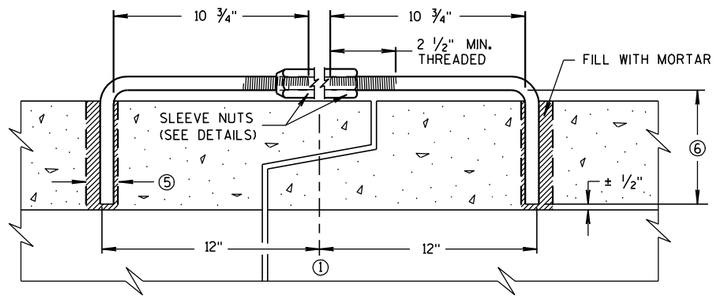

LONGITUDINAL SECTION

(JOINT TIES FOR 12" TO 108" DIA. CONCRETE PIPE)

ADJUSTABLE TIE ROD (ALTERNATE NO. 3)

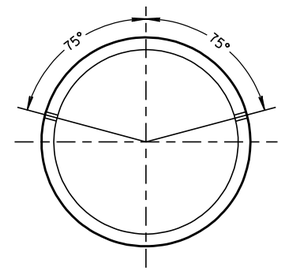

PLACEMENT OF (2) CAST-IN-PLACE INSERTS OR HOLES DURING FABRICATION FOR PIPE SECTIONS REQUIRING TIE RODS

TRANSVERSE SECTION

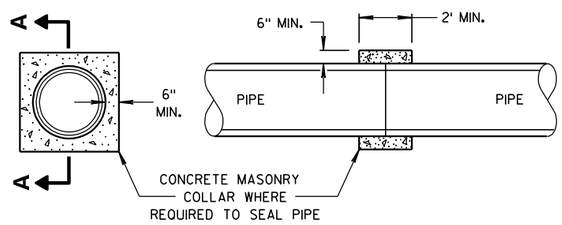

SECTION A-A

CONCRETE COLLAR DETAIL

JOINT TIES FOR CONCRETE PIPE AND CONCRETE COLLAR DETAIL

STATE OF WISCONSIN
DEPARTMENT OF TRANSPORTATION

APPROVED
6/5/2012 — DATE
/S/ Jerry H. Zogg — ROADWAY STANDARDS ENGINEER
79
FHWA

6

S.D.D. 8 F 4-7

6

S.D.D. 8 F 4-7

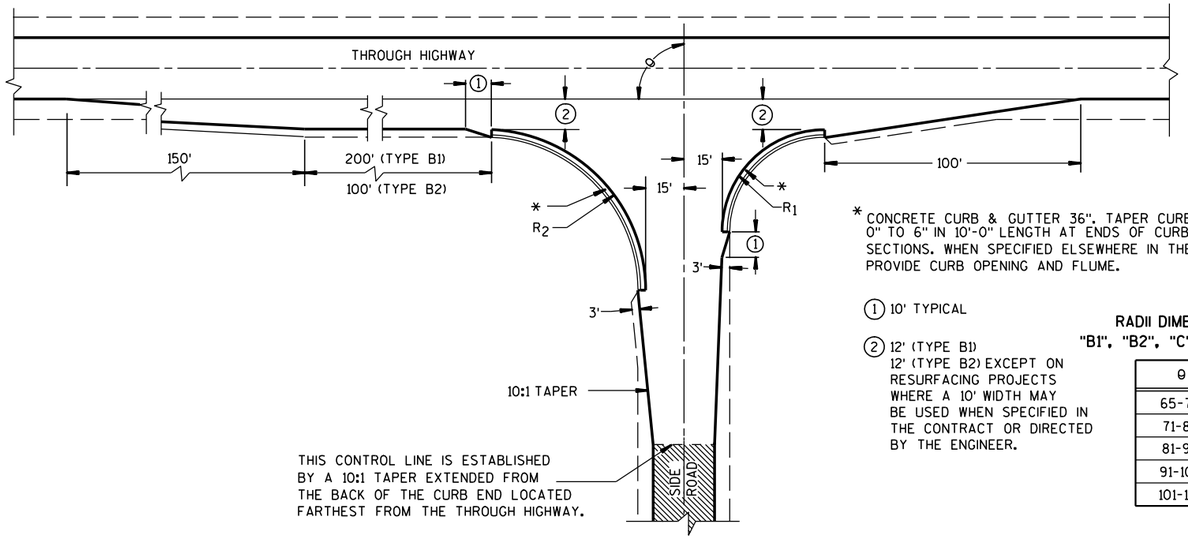

TYPE "B1" AND "B2"

* CONCRETE CURB & GUTTER 36". TAPER CURB HEIGHT 0" TO 6" IN 10'-0" LENGTH AT ENDS OF CURB & GUTTER SECTIONS. WHEN SPECIFIED ELSEWHERE IN THE CONTRACT, PROVIDE CURB OPENING AND FLUME.

① 10' TYPICAL

② 12' (TYPE B1)
12' (TYPE B2) EXCEPT ON RESURFACING PROJECTS WHERE A 10' WIDTH MAY BE USED WHEN SPECIFIED IN THE CONTRACT OR DIRECTED BY THE ENGINEER.

RADII DIMENSIONS FOR TYPES "B1", "B2", "C" AND "D" INTERSECTIONS

θ	R_1	R_2
65-70	35	70
71-80	40	70
81-90	40	60
91-100	50	55
101-110	60	45

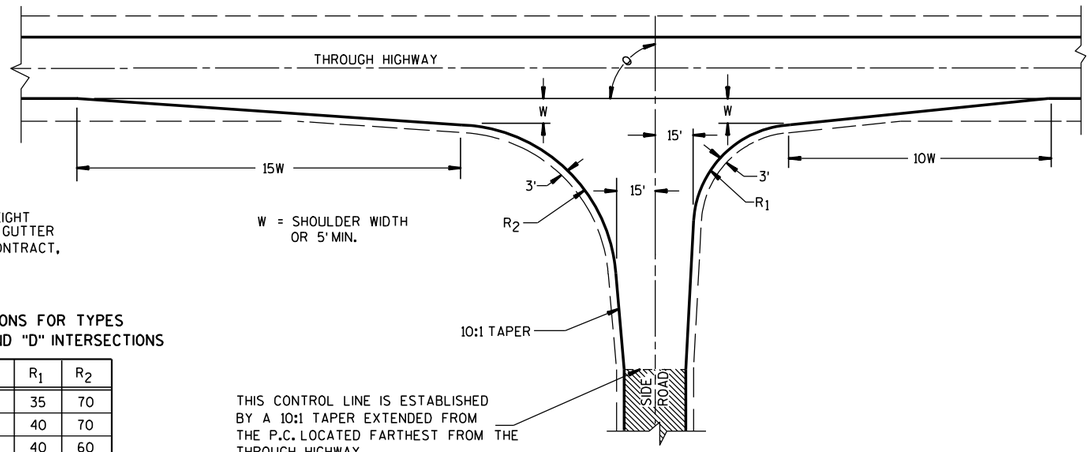

TYPE "C"

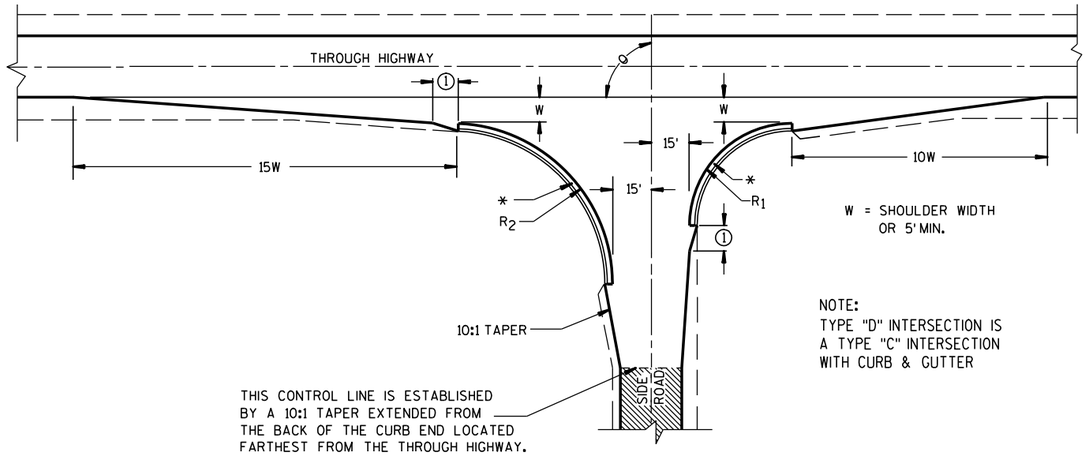

TYPE "D"

NOTE:
TYPE "D" INTERSECTION IS A TYPE "C" INTERSECTION WITH CURB & GUTTER

GENERAL NOTES

DESIGNS MAY BE USED INTERCHANGEABLY IN COMBINATION OR SEPARATELY FOR ANY ONE COMPLETE INTERSECTION DEPENDING UPON INTERSECTION ANGLE AND SURFACING OF EACH APPROACH ROADWAY.

SIDE ROAD SURFACING NOTE

WHEN THE SIDE ROAD IS NOT PRESENTLY PAVED, PAVEMENT SHALL BE PLACED TO THE LIMITS SHOWN UNLESS OTHERWISE PROVIDED IN THE CONTRACT. WHERE THE CONSTRUCTION LIMITS ARE BEYOND THE PAVING LIMITS, CRUSHED AGGREGATE SURFACING SHALL BE PLACED BETWEEN THE PAVING LIMITS AND CONSTRUCTION LIMITS.

WHEN THE SIDE ROAD IS PRESENTLY PAVED, NEW PAVEMENT SHALL BE PLACED TO THE LIMITS OF DESIGN AS SHOWN AND BEYOND, IF NECESSARY, TO MEET EXISTING PAVEMENT.

WHEN THE SIDE ROAD IS THE CONSTRUCTION PROJECT, THE INTERSECTION SURFACING SHALL BE THE SAME AS FOR THE PROJECT.

EXISTING SURFACE

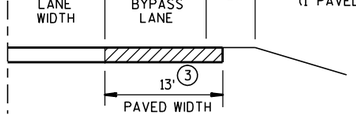

SECTION A-A
(SHOWING BYPASS LANE AND SHOULDER)

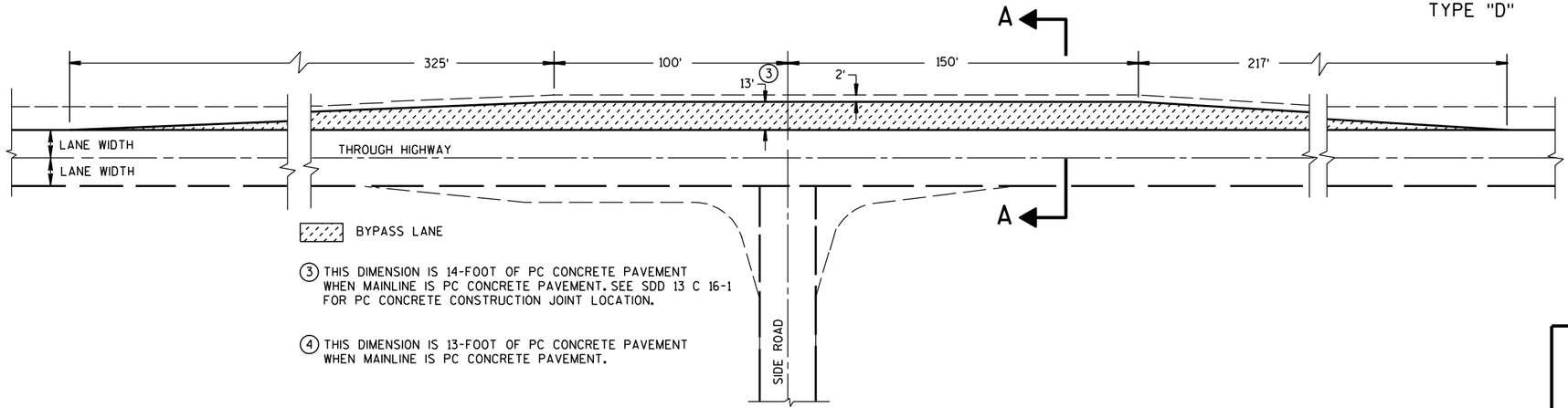

③ THIS DIMENSION IS 14-FOOT OF PC CONCRETE PAVEMENT WHEN MAINLINE IS PC CONCRETE PAVEMENT. SEE SDD 13 C 16-1 FOR PC CONCRETE CONSTRUCTION JOINT LOCATION.

④ THIS DIMENSION IS 13-FOOT OF PC CONCRETE PAVEMENT WHEN MAINLINE IS PC CONCRETE PAVEMENT.

TEE INTERSECTION BYPASS LANE DETAIL

AT-GRADE SIDE ROAD INTERSECTION, TYPES "B1", "B2", "C" AND "D" AND TEE INTERSECTION BYPASS LANE

STATE OF WISCONSIN
DEPARTMENT OF TRANSPO...

6
S.D.D. 9 A 1-12a

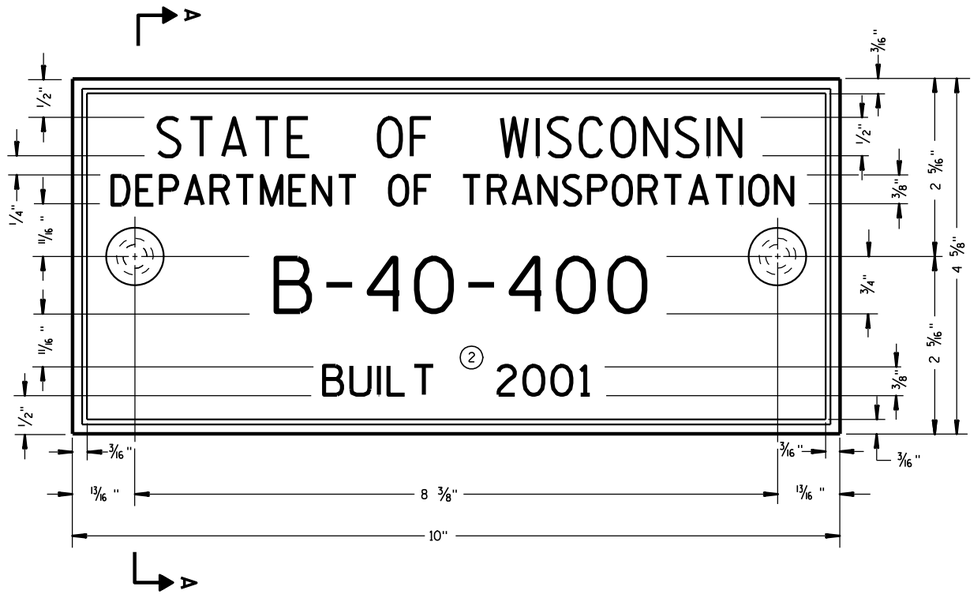

TYPICAL NAME PLATE
(BRIDGES, CULVERTS, AND RETAINING WALLS)

NUMBERING DESIGNATION
MULTI-UNIT STRUCTURES

GENERAL NOTES

NAME PLATES TO BE INSTALLED ON BRIDGES, CULVERTS, AND RETAINING WALLS SHALL CONFORM TO THE REQUIREMENTS OF SECTION 502.3.11 OF THE STANDARD SPECIFICATIONS.

THE BRIDGE NUMBER AND YEAR BUILT SHOWN ON THIS DRAWING ARE EXAMPLES ONLY. SEE CONSTRUCTION PLANS FOR INDIVIDUAL NUMBERING AND YEAR BUILT.

(1) EPOXY RESIN SHALL BE FROM AN APPROVED MANUFACTURER AND USED IN ACCORDANCE WITH MANUFACTURER'S RECOMMENDATIONS.

(2) REHABILITATION OF AN EXISTING STRUCTURE SHOULD USE THE DATE OF ORIGINAL STRUCTURE CONSTRUCTION.

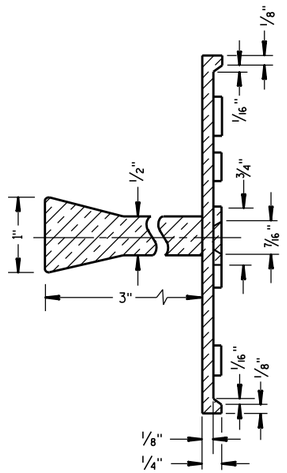

SECTION A-A

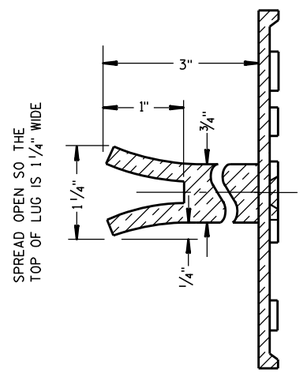

ALTERNATE LUG

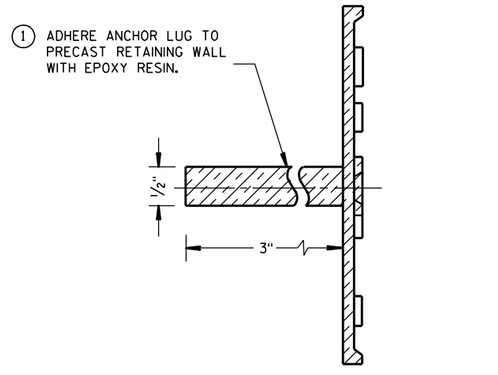

ALTERNATE LUG
(FOR ATTACHMENT TO PRECAST STRUCTURES)

NAME PLATE (STRUCTURES)

STATE OF WISCONSIN
DEPARTMENT OF TRANSPORTATION

APPROVED

3/26/10 DATE

/S/ Scot Beck -- CHIEF STRUCTURAL DEVELOP ENGINEER

FHWA

6

S.D.D. 12 A 3-10

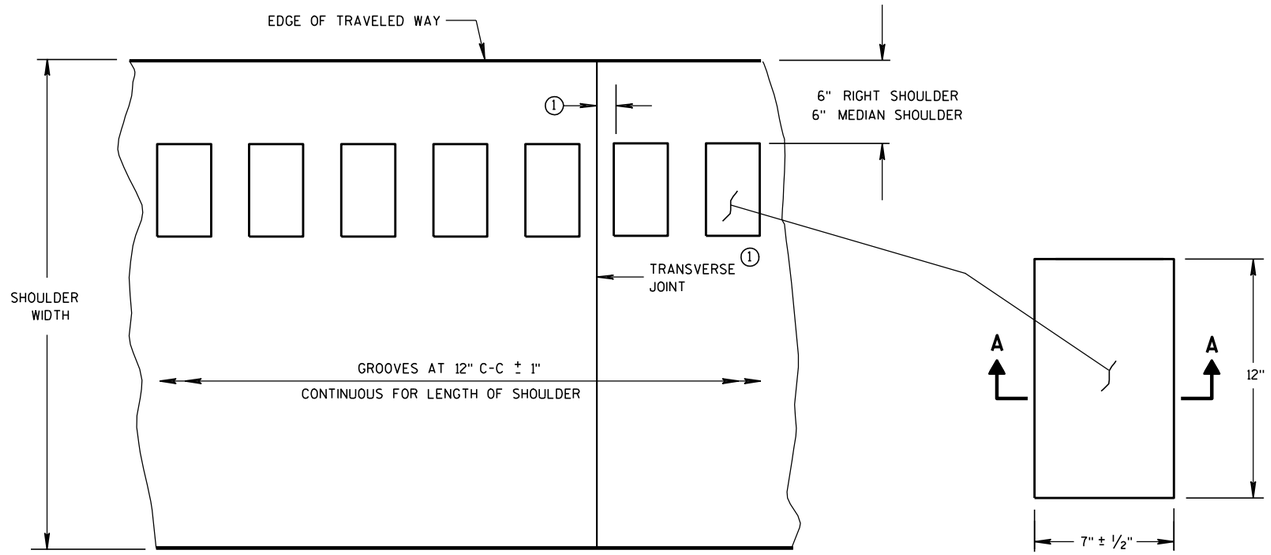

PLAN VIEW
SHOULDER WITH GROOVES

PLAN VIEW
(SINGLE GROOVE)

PLACEMENT DETAIL FOR MILLED RUMBLE STRIP

GENERAL NOTES

DETAILS OF CONSTRUCTION SHOWN ON THIS DRAWING SHALL CONFORM TO THE PERTINENT REQUIREMENTS OF THE STANDARD SPECIFICATIONS AND APPLICABLE SPECIAL PROVISIONS.

RUMBLE STRIPS ON EXPRESSWAYS

DO NOT INSTALL RUMBLE STRIPS ACROSS SIDE ROAD INTERSECTIONS, COMMERCIAL DRIVEWAYS OR ADJACENT TO RIGHT TURN LANES, LEFT TURN LANES OR TURN LANE TAPERS. THE ATTACHED STANDARD DETAIL DRAWING SHOWS THE LOCATION OF THE RUMBLE STRIPS AT INTERCHANGE AREAS.

(1) CONCRETE PAVEMENT - RUMBLE STRIPS SHALL BE A MINIMUM OF 6" AWAY FROM TRANSVERSE JOINTS.

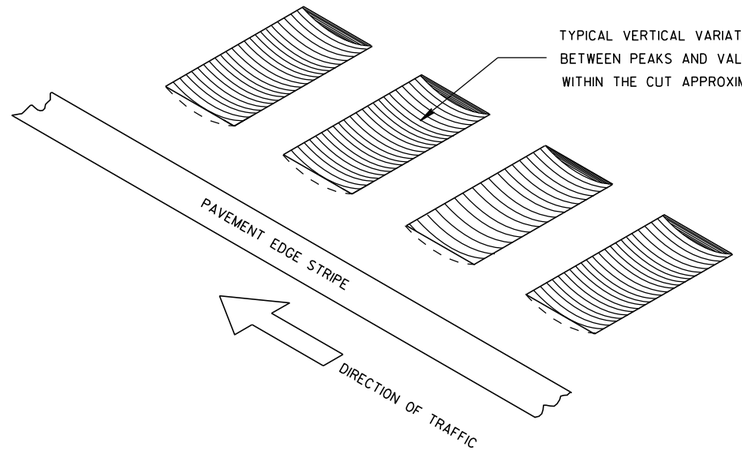

ISOMETRIC

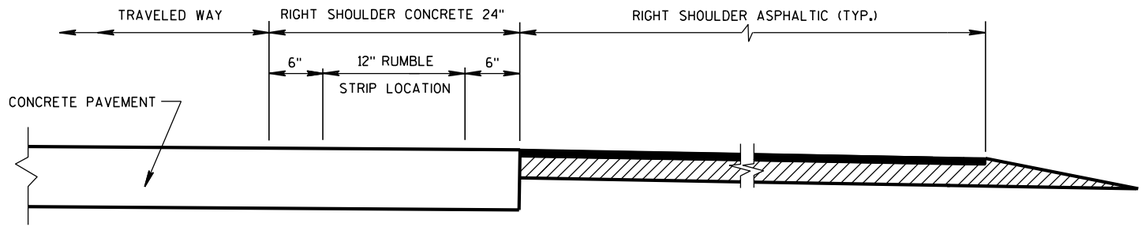

SECTION VIEW
CONCRETE PAVEMENT EXTENDS INTO RIGHT SHOULDER)

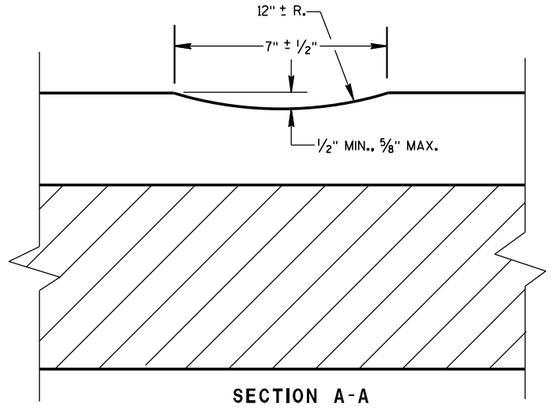

SECTION A-A

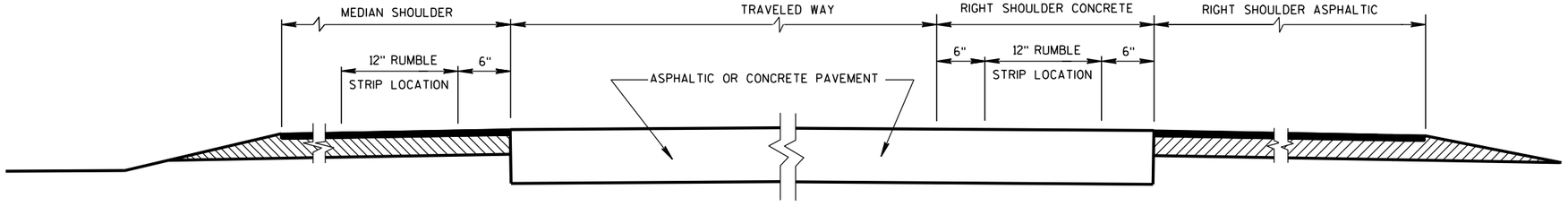

SECTION VIEW

TYPICAL LOCATIONS OF SHOULDER RUMBLE STRIPS IN RURAL DIVIDED HIGHWAYS

(ONE ROADWAY IS SHOWN)

SHOULDER RUMBLE STRIP, MILLING

STATE OF WISCONSIN
DEPARTMENT OF TRANSPO...

6

S.D.D. 13 A 5-4a

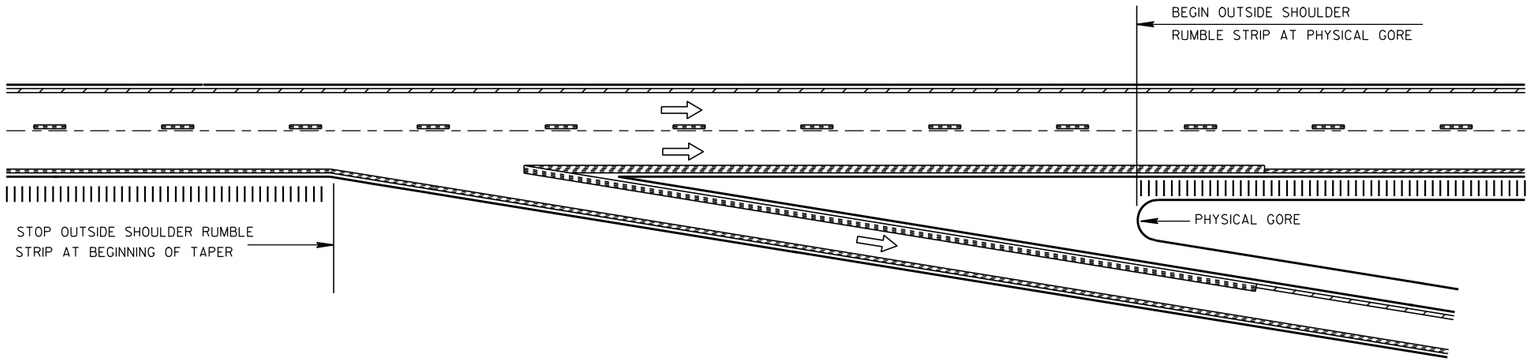

TYPICAL EXIT RAMP

NOTE:
ARROW SYMBOL (⇨)
SHOWS DIRECTION OF TRAVEL

NOTES:

NO RUMBLE STRIP ON EXIT, DIRECTIONAL, OR ENTRANCE RAMPS, EXCEPT NEAR THE ENTRANCE TAPER END AS SHOWN.

PAVEMENT MARKING DETAILS AND SPECIFICATIONS ARE PROVIDED ELSEWHERE IN THE CONTRACT.

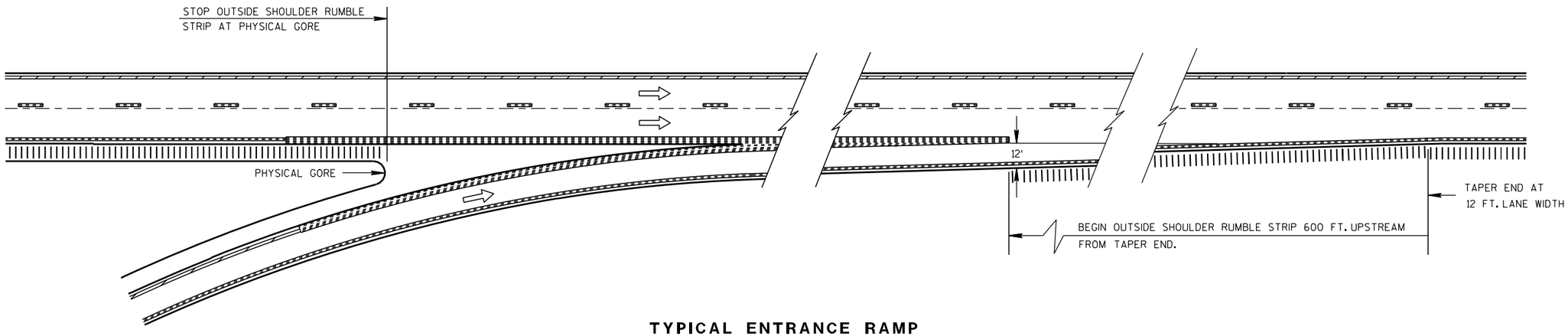

TYPICAL ENTRANCE RAMP

RAMP AND GORE RUMBLE STRIP LOCATIONS

6

6

S.D.D. 13 A 5-4b

S.D.D. 13 A 5-4b

SHOULDER RUMBLE STRIP, MILLING

STATE OF WISCONSIN
DEPARTMENT OF TRANSPORTATION

APPROVED

8/17/2011
DATE

/S/ Jerry H. Zogg
ROADWAY STANDARDS ENGINEER

FHWA

GENERAL NOTES

DETAILS OF CONSTRUCTION, MATERIALS AND WORKMANSHIP NOT SHOWN ON THIS DRAWING SHALL CONFORM TO THE PERTINENT REQUIREMENTS OF THE STANDARD SPECIFICATIONS, AND THE APPLICABLE SPECIAL PROVISIONS.

(1) W6 X 9 OR W6 X 8.5 STEEL POSTS AND NOTCHED PLASTIC BLOCKOUTS ARE ACCEPTABLE ALTERNATIVES FOR 6" X 8" WOOD POSTS WITH WOOD OR PLASTIC BLOCKOUTS. USE APPROVED NOTCHED PLASTIC BLOCKOUTS WITH STEEL POSTS. APPROVED PLASTIC BLOCKOUT DESIGNS MAY VARY FROM THIS TYPICAL DETAIL WHEN USED IN CONJUNCTION WITH STEEL POSTS.

DO NOT MIX STEEL POSTS AND WOOD POSTS IN A SINGLE INSTALLATION.

(2) USE STRUCTURAL STEEL POSTS CONFORMING TO ASTM A 36. GALVANIZED POSTS ACCORDING TO AASHTO M 111. EITHER SET THE POSTS IN DRILLED HOLES OR DRIVE TO GRADE. REMOVE MUSHROOMING CAUSED BY DRIVING AND REPAIR DAMAGED SPELTER COATING ON GALVANIZED POSTS.

(3) INSTALL STEEL POSTS WITH HOLES ON APPROACHING TRAFFIC SIDE.

(4) USE EITHER WOOD OR APPROVED PLASTIC BLOCKOUTS ON WOOD POSTS.

(5) IF THE DISTANCE FROM BACK OF POST TO SHOULDER HINGE POINT IS LESS THAN 2 FEET INSTALL LONGER POST AT HALF POST SPACING, W BEAM (LHW).

(6) IF ROCK IS ENCOUNTERED DURING EXCAVATION, THE ENGINEER MAY APPROVE USING A 12 INCH DIAMETER POST HOLE EXTENDING 20 INCHES DEEP INTO THE ROCK. PLACE GRANULAR MATERIAL IN THE BOTTOM OF THE HOLE APPROXIMATELY 2½ INCHES DEEP. CUT THE POSTS TO LENGTH AND PLACE IN YHE HOLE. BACKFILL WITH MATERIAL EXCAVATED FROM THE HOLE AND COMPACT ADEQUATEY.

INSTALL BEAM GUARD SECTIONS AND ALL NECESSARY HARDWARE ACCORDING TO THE APPLICABLE PLAN AND CURRENT STANDARD AND SUPPLEMENTAL SPECIFICATIONS.

ALL DIMENSIONS ARE SUBJECT TO MANUFACTURER'S TOLERANCES EXCEPT WHERE ALLOWABLE TOLERANCES ARE SHOWN.

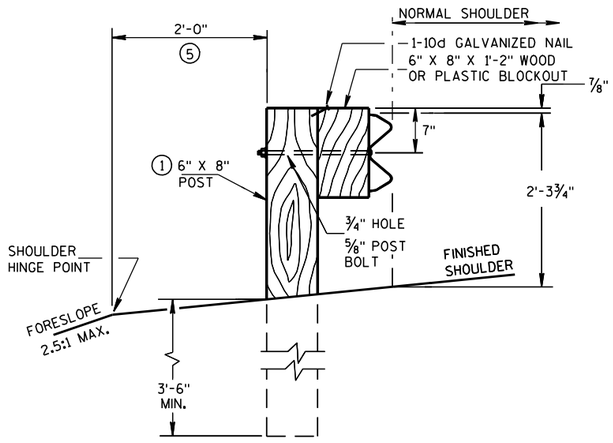

END VIEW
LOCATED ALONG A ROADWAY SHOULDER
STANDARD INSTALLATION

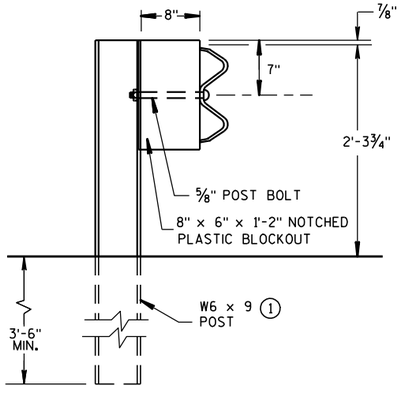

END VIEW
STEEL POST & NOTCHED
PLASTIC BLOCKOUT ALTERNATIVE
STANDARD INSTALLATION

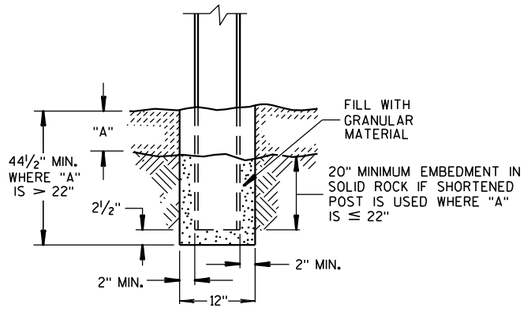

END VIEW
SETTING STEEL OR WOOD POST IN ROCK (6)

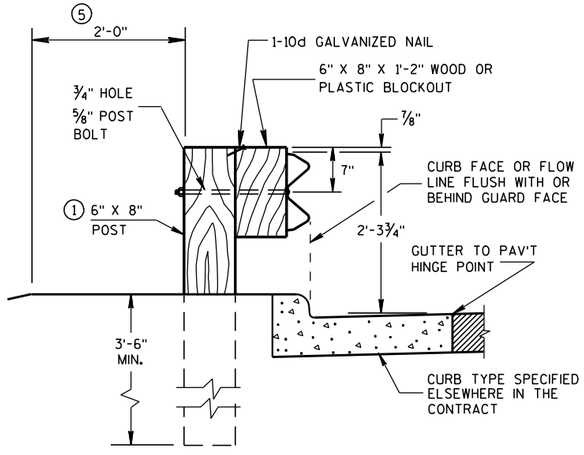

END VIEW
LOCATED ALONG A CURBED ROADWAY

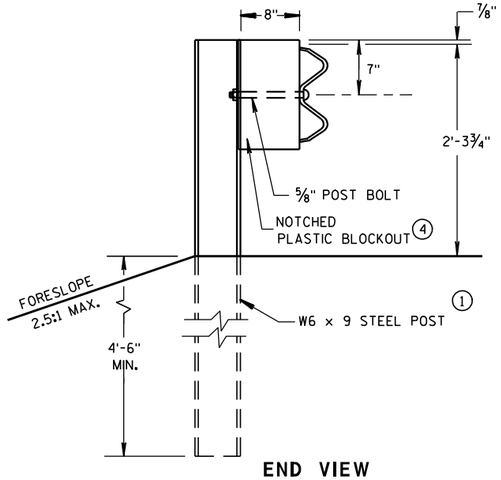

END VIEW
LONGER POST AT HALF
POST SPACING W BEAM
(LHW)

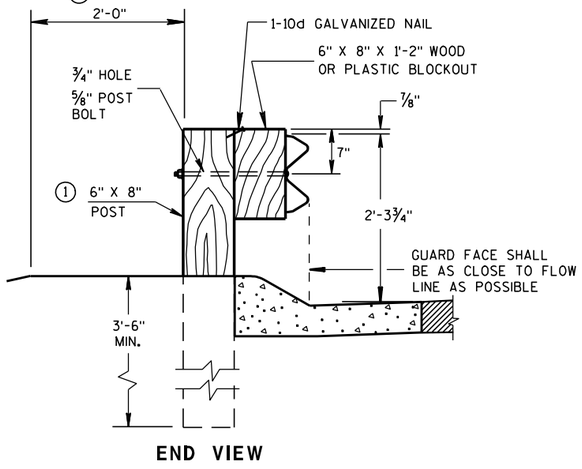

END VIEW
LOCATED ALONG A
MOUNTABLE CURBED ROADWAY

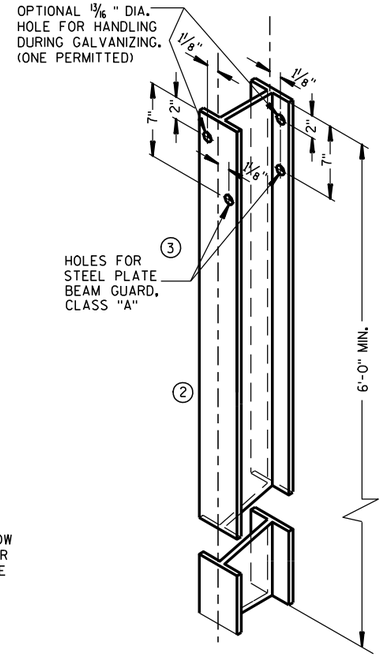

STEEL POST &
HOLE PUNCHING DETAIL
(W6 X 9) (1)

ALL HOLES 13/16" DIAMETER EXCEPT AS NOTED

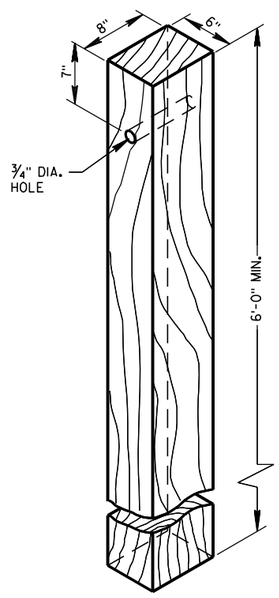

WOOD POST
(6"X8") NOMINAL

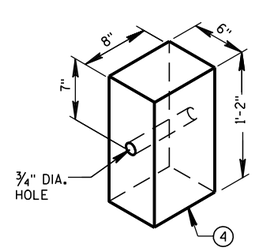

WOOD OR PLASTIC
BLOCKOUT FOR
WOOD POSTS

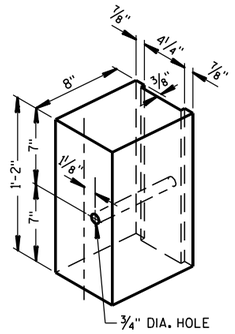

TYPICAL NOTCHED (1)
PLASTIC BLOCKOUT
FOR STEEL POSTS

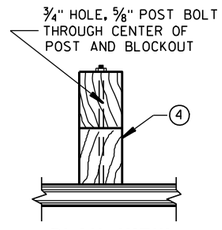

PLAN VIEW
WOOD POST,
BLOCKOUT & BEAM

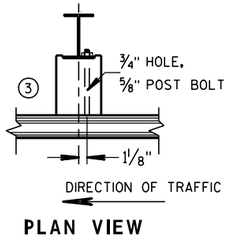

PLAN VIEW
STEEL POST, NOTCHED
PLASTIC BLOCKOUT & BEAM

TYPICAL INSTALLATION OF STEEL PLATE BEAM GUARD

STEEL PLATE BEAM GUARD,
CLASS "A"
INSTALLATION & ELEMENTS

STATE OF WISCONSIN
DEPARTMENT OF TRANSPORTATION

6
S.D.D. 14 B 15-7a

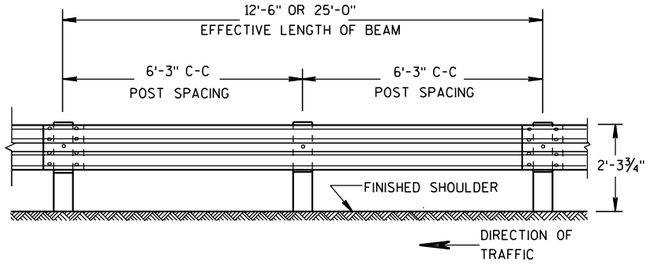

FRONT VIEW

POST SPACING STANDARD INSTALLATION

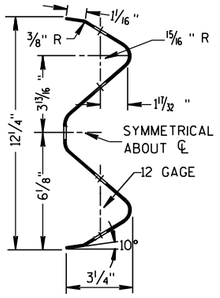

SECTION THRU W BEAM

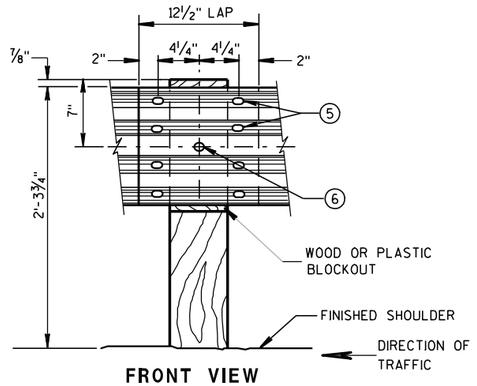

FRONT VIEW

BEAM SPLICE AT WOOD POST AND POST MOUNTING DETAIL

GENERAL NOTES

1. PROVIDE TYPE "H" SILVER REFLECTIVE SHEETING ON ALL REFLECTORS EXCEPT THOSE LOCATED ALONG THE LEFT EDGE OF ONE-WAY ROADWAYS, WHICH SHALL BE PROVIDED WITH TYPE "H" YELLOW REFLECTIVE SHEETING.
2. DO NOT INSTALL REFLECTORS ON THE FIRST 50 FEET OF THE APPROACH END OF THE ENERGY ABSORBING TERMINAL.
3. REVERSE EVERY OTHER REFLECTOR FOR 2-WAY VISIBILITY. THE CONTRACTOR MAY FURNISH TWO-SIDED REFLECTORS IN LIEU OF ONE-SIDED REFLECTORS.
4. PROVIDE AN ANGLE OF BEND OF 90° ± 1° FOR TWO-SIDED REFLECTORS.
5. 8 - 5/8" ϕ X 2 " BUTTON HEAD BOLTS WITH OVAL SHOULDERS & RECESS NUTS.
6. 5/8" ϕ X 1'-6" BUTTON HEAD BOLT AND AND RECESS NUT WITH ROUND WASHER UNDER NUT.

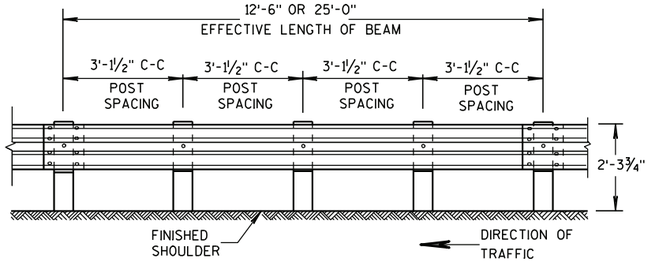

FRONT VIEW

POST SPACING FOR LONGER POST AT HALF POST SPACING W BEAM (LHW)

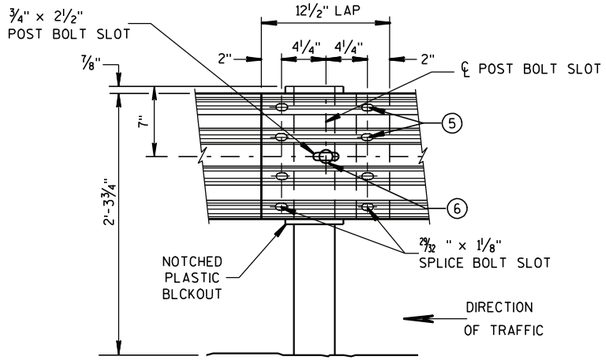

FRONT VIEW

BEAM SPLICE AT STEEL POST

TYPICAL SPLICING DETAILS OF STEEL PLATE BEAM GUARD

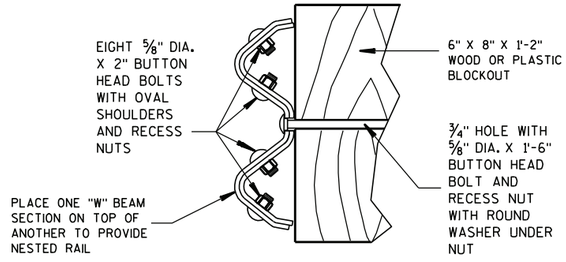

NESTED W BEAM (NW)

USE ALL OTHER STANDARD BEAM GUARD DETAILS FOR CONSTRUCTING NESTED W BEAM (NW)

REFLECTOR SPACING (2)

	BEAM GUARD LENGTH	REFLECTOR SPACING	NO. SURFACES REFLECTORIZED	MIN. NO. REFLECTORS
ONE WAY TRAFFIC	< 200'	50' C-C	1	3
	> 200'	100' C-C	1	
TWO WAY TRAFFIC	< 200'	25' C-C	1 (3)	6
	> 200'	50' C-C	1	
TWO WAY TRAFFIC	< 200'	50' C-C	2	3
	> 200'	100' C-C	2 (4)	

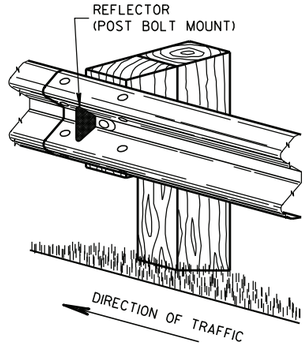

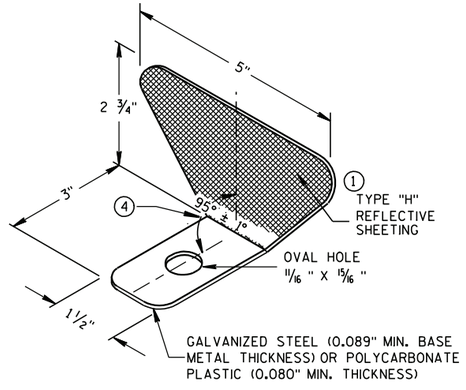

ONE SIDED REFLECTOR DETAIL AND TYPICAL INSTALLATION (1)

STEEL PLATE BEAM GUARD,
CLASS "A",
INSTALLATION & ELEMENTS

STATE OF WISCONSIN
DEPARTMENT OF TRANSPO.....T

6
S.D.D. 14 B 15-7b

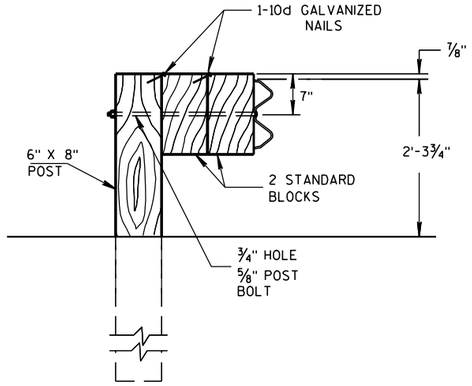

DETAIL FOR DOUBLE BLOCKS

THE NUMBER OF DOUBLE BLOCK POSTS WITHIN A BARRIER RUN IS UNLIMITED

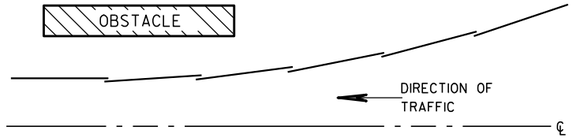

PLAN VIEW
BEAM LAPPING DETAIL

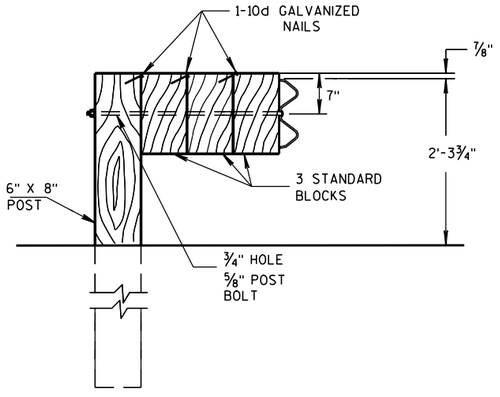

DETAIL FOR TRIPLE BLOCKS

TRIPLE BLOCK DETAIL IS LIMITED TO ONE LOCATION WITHIN A BEAM GUARD RUN.

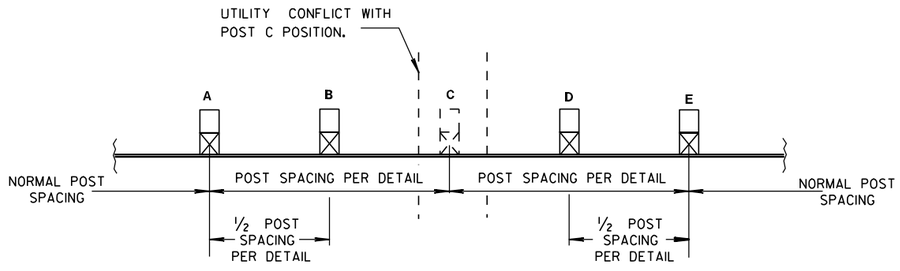

POST DRIVING FOR CONTINUOUS UNDERGROUND OBSTRUCTION

NOTES: USE DOUBLE OR TRIPLE BLOCKS WHEN UNDERGROUND OBSTACLES PREVENT THE POST FROM BEING INSTALLED.

DO NOT USE EXTRA BLOCKOUTS IF IT CAUSES THE POST TO BE DRIVEN BEYOND SHOULDER HINGE POINT OR CAUSES A FIXED OBJECT TO BE WITHIN THE DEFLECTION DISTANCE OF THE BARRIER.

STEEL PLATE BEAM GUARD, CLASS "A", INSTALLATION & ELEMENTS

STATE OF WISCONSIN
DEPARTMENT OF TRANSPORTATION

APPROVED

5/23/11	/S/ Jerry H. Zogg	
DATE	ROADWAY STANDARDS ENGINEER	ENT

FHWA

6
S.D.D. 14 B 15-7c

BILL OF MATERIALS

NOTE NO.	QTY.	DESCRIPTION
(1)	4	WOOD BREAKAWAY TERMINAL POST: 5½" X 7½" X 3'-9"
(2)	**	STEEL TUBE: OPTION 1 - QUANITY OF 4 TS 8" X 6" X 0.188", 4'-6" LONG OR OPTION 2 - QUANITY OF 2 TS 8" X 6" X 0.188", 6'-0" AND 2 TS 8" X 6" X 0.188", 4'-6" LONG
(3)	2	SOIL PLATE: 2'-0" X 1'-6" X ¼" **
(4)	4	WOOD BREAKAWAY CRT POST: 6" X 8" X 6'-0"
(5)	6	WOOD OFFSET BLOCKS: 6' X 8" X 1'-2"
(6)	1	PIPE SLEEVE: 2" X 5 ½" STANDARD PIPE
(7)	1	BEARING PLATE
(8)	1	BCT CABLE ASSEMBLY
(9)	1	CABLE ANCHOR BOX
(10)	1	STRUT & YOKE
(11)	1	STEEL PLATE BEAM, END PANEL 12 GA. 13'-6½" LONG FOR SKT-350, ET-2000 AND ET-2000 PLUS
(12)	3	STEEL PLATE BEAM: 12 GA. 13'-6½"
(13)	1	ET-2000/ET-2000 PLUS GUARDRAIL EXTRUDER OR SKT-350 IMPACT HEAD: AS FURNISHED BY MANUFACTURER
(14)	1	REFLECTIVE SHEETING TYPE H: 18" X 18"
(15)	1	E.A.T. MARKER POST

GENERAL NOTES

FOLLOW MANUFACTURE'S BOLTING RECOMMENDATIONS. IF NONE ARE AVAILABLE, INSTALL ⅝" ϕ X 1'-6" BUTTON HEAD BOLTS AT ALL POSTS EXCEPT FOR POST 1.

(A) THE SLOPE IN THE AREA BOUNDED BY THE EXTENDED VEHICLE RUNOUT PATH (EVRP), THE HINGE POINT LINE (HPL),AND THE CLEAR ZONE LIMITS (CZL) SHALL BE 4:1 OR FLATTER.

(B) AFTER FINAL ASSEMBLY, RECHECK CABLE TO BE SURE IT IS TAUT AND HAS NOT RELAXED.

(C) THE 13 SLOT FIRST RAIL PANEL MAY BE USED IN LIEU OF THE 3 SLOT RAIL PANEL ON SKT-350 ONLY.

(D) THE TOP OF THE STEEL TUBE ON POSTS 1 THROUGH 4 SHALL NOT BE MORE THAN 3" ABOVE THE FINISH GROUND ELEVATION.

(E) THE CENTER OF THE UPPER 3½" DIAMETER HOLE ON POST 5 THROUGH 8 SHALL BE ¾" ABOVE THE FINISHED GROUND LINE.

(F) SHEETING IS ATTACHED TO 0.040 ALUMINUM SHEET AND ATTACHED TO E.A.T. HEAD USING 4 STAINLESS STEEL SELF-TAPPING SCREWS. ONE SCREW PER CORNER OF E.A.T.

STEEL POSTS SHALL NOT BE ALLOWED FOR USE WITH ENERGY ABSORBING TERMINALS.

DO NOT INSTALL REFLECTORS ON THE FIRST 50 FEET OF THE APPROACH END OF THE ENERGY ABSORBING TERMINAL.

* DO NOT ATTACH BLOCKOUTS TO POSTS 1 AND 2.

** SDD SHOWS 4 - 54 INCH STEEL TUBES WITH SOIL PLATES INSTALLED ON POST 1 AND POST 2. POST 3 AND 4 DO NOT NEED SOIL PLATES. AN ALTERNATIVE INSTALLATION WOULD CONSIST OF 2 - 72 INCH STEEL TUBES ON POST 1 AND POST 2 AND 54 INCH SOIL TUBES ON POSTS 3 AND 4. THE ALTERNATIVE INSTALLATION DOES NOT REQUIRE SOIL PLATES.

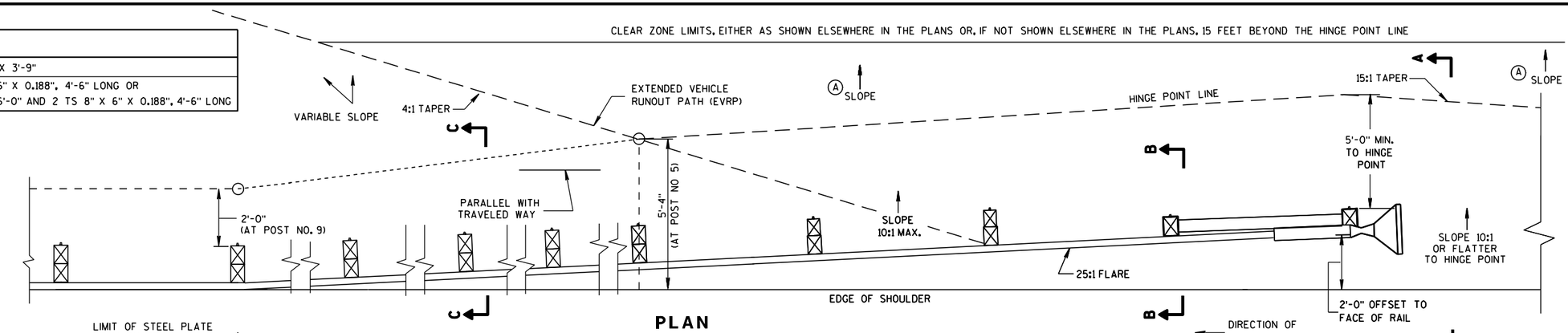

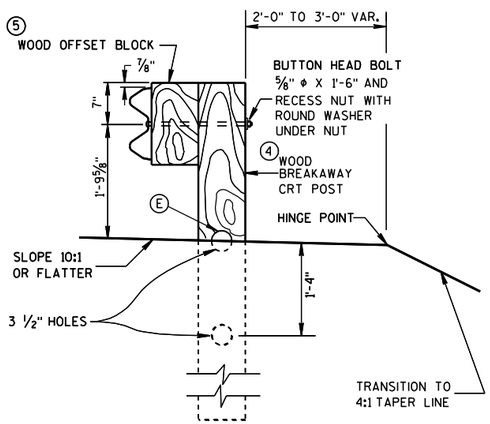

SECTION C-C
TYPICAL AT POST NOS. 6, 8

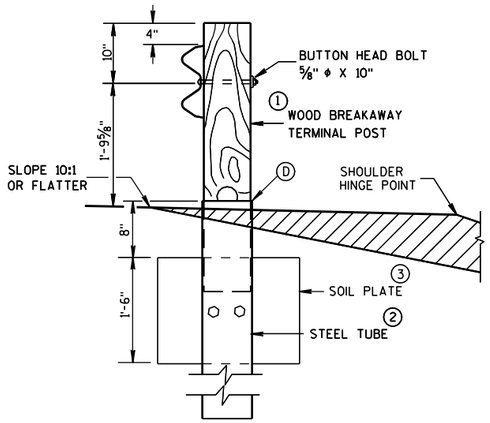

SECTION B-B
TYPICAL AT POST NO. 2*

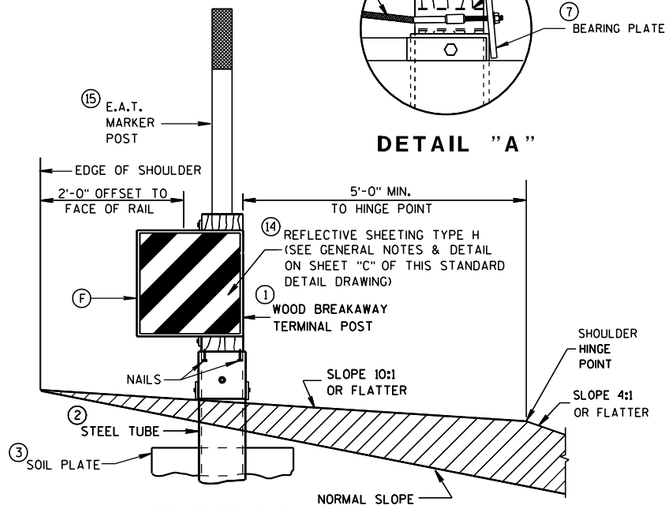

DETAIL "A"

SECTION A-A
TYPICAL AT POST NO. 1*

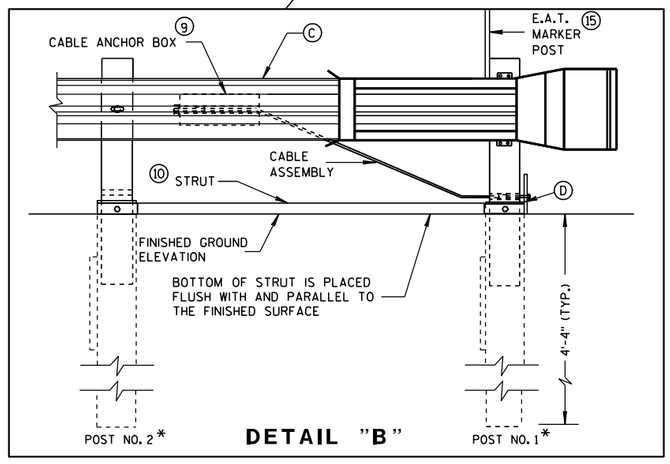

DETAIL "B"

STEEL PLATE BEAM GUARD ENERGY ABSORBING TERMINAL

STATE OF WISCONSIN
DEPARTMENT OF TRANSPORTATION

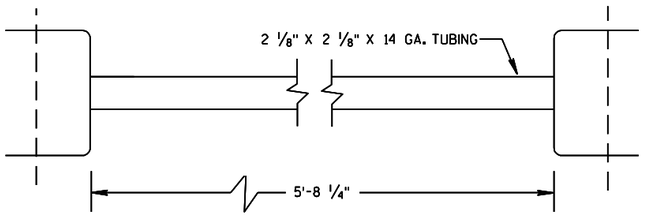

⑩ STRUT DETAIL (SKT-350)

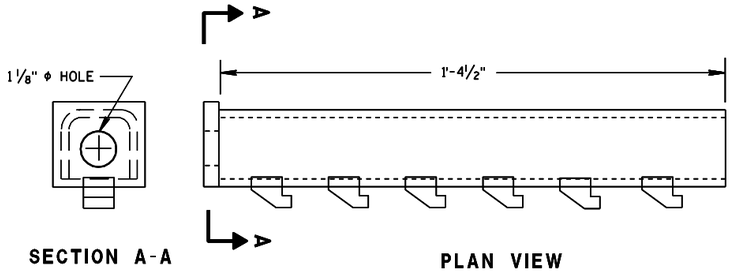

⑨ CABLE ANCHOR BOX (ET-2000/ET-2000 PLUS)

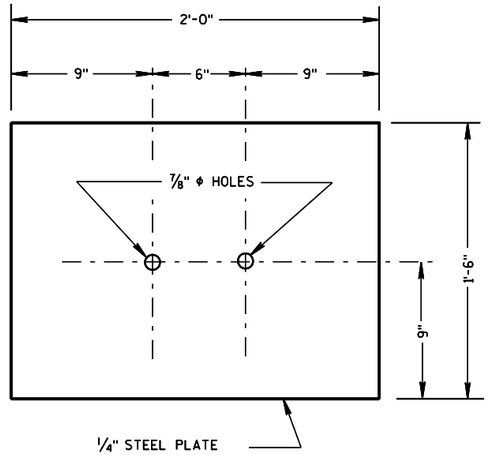

③ SOIL PLATE

(SKT-350, ET-2000/ET-2000 PLUS)

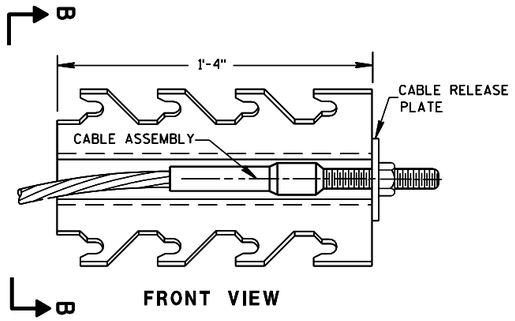

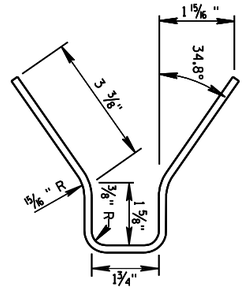

⑨ CABLE ANCHOR BOX (SKT-350)

(SKT-350)

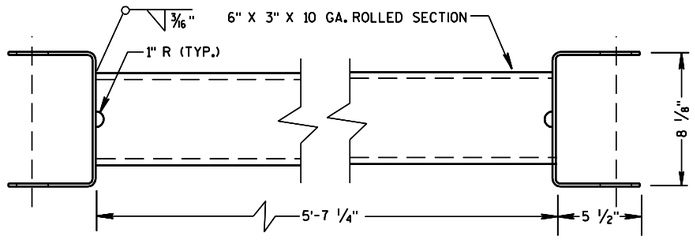

⑩ STRUT DETAIL (ET-2000/ET-2000 PLUS)

(ET-2000/ET-2000 PLUS)

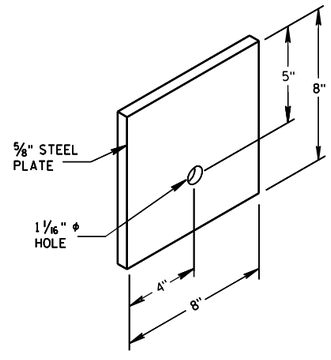

⑦ STEEL BEARING PLATE

(SKT-350, ET-2000/ET-2000 PLUS)

STEEL PLATE BEAM GUARD
ENERGY ABSORBING TERMINAL

STATE OF WISCONSIN
DEPARTMENT OF TRANSPORTATION

6

S.D.D. 14 B 24-7b

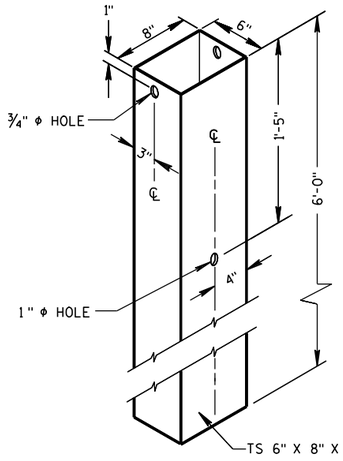

② 72" STEEL TUBE
(POSTS NO. 1-4

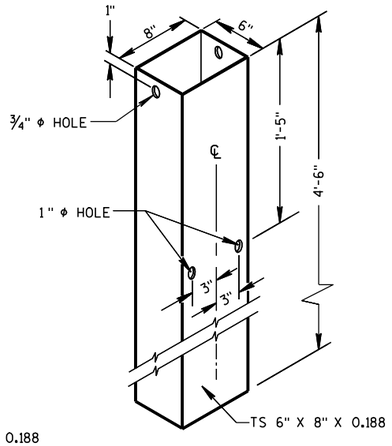

② 54" STEEL TUBE
(POSTS NO. 1-4

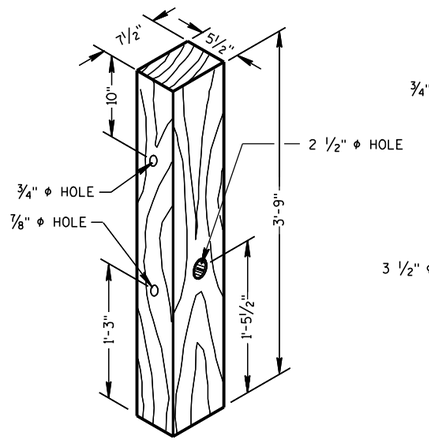

① TERMINAL POST
(POSTS NO. 1-4

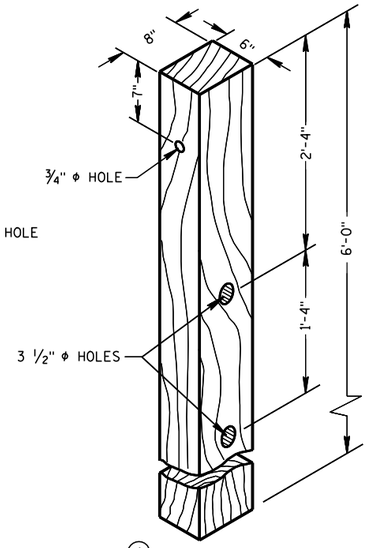

④ CRT POST
(POSTS NO'S 5-8

WOOD BREAKAWAY POSTS

GENERAL NOTES

STEEL PLATE BEAM GUARD, ENERGY ABSORBING TERMINAL SHALL BE PAID FOR AT THE CONTRACT UNIT PRICE EACH, WHICH SHALL INCLUDE HARDWARE, STEEL PLATE BEAM GUARD, POSTS, REFLECTIVE SHEETING AND INSTALLATION AS SHOWN.

WHEN ROCK IS ENCOUNTERED DURING EXCAVATION, A 12 INCH DIA. POST HOLE EXTENDING 20 INCHES DEEP INTO THE ROCK MAY BE USED IF APPROVED BY THE ENGINEER. GRANULAR MATERIAL SHALL BE PLACED IN THE BOTTOM OF THE HOLE APPROXIMATELY 2 ½" INCHES DEEP TO PROVIDE DRAINAGE. THE SOIL TUBES SHALL BE FIELD CUT TO LENGTH, PLACED IN THE HOLE AND BACKFILLED WITH ADEQUATELY COMPACTED MATERIAL EXCAVATED FROM THE HOLE.

SEE APPROVED PRODUCTS LIST FOR ACCEPTABLE E. A. T. MARKER POST.

(G) ½" DIA. X 3" LAG BOLT WITH WASHER.

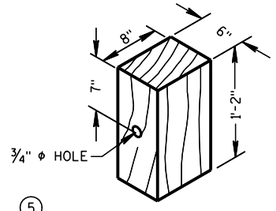

⑤ WOOD OFFSET BLOCK
REQ'D. AT ALL POSTS EXCEPT POST NO'S 1 & 2

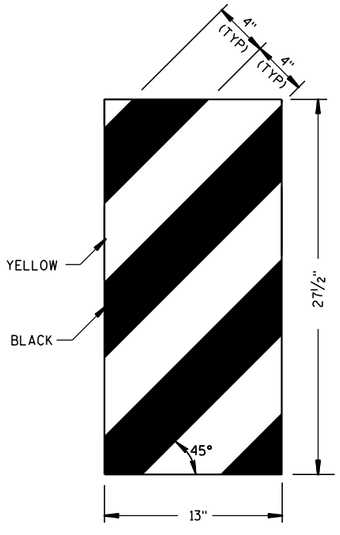

ET-2000 PLUS ONLY

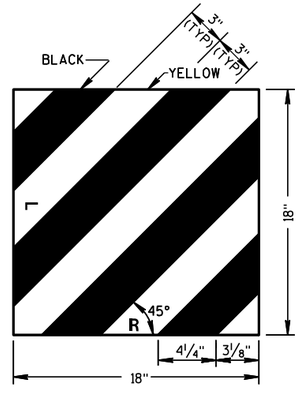

ET-2000 AND SKT-350

⑭ REFLECTIVE SHEETING DETAILS

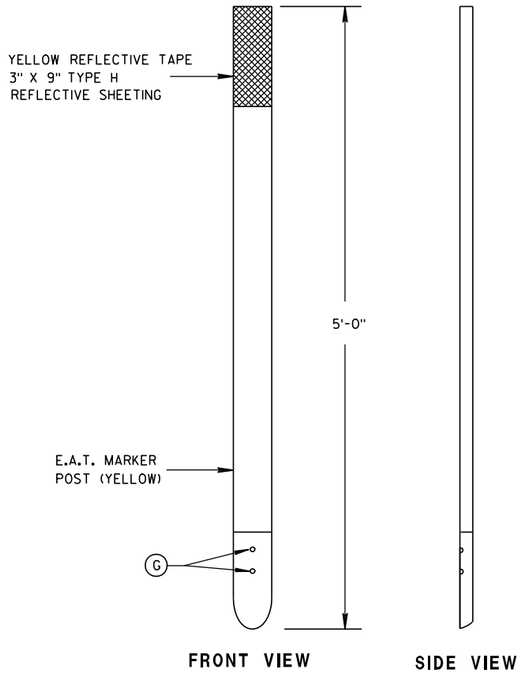

⑮ E.A.T. MARKER POST

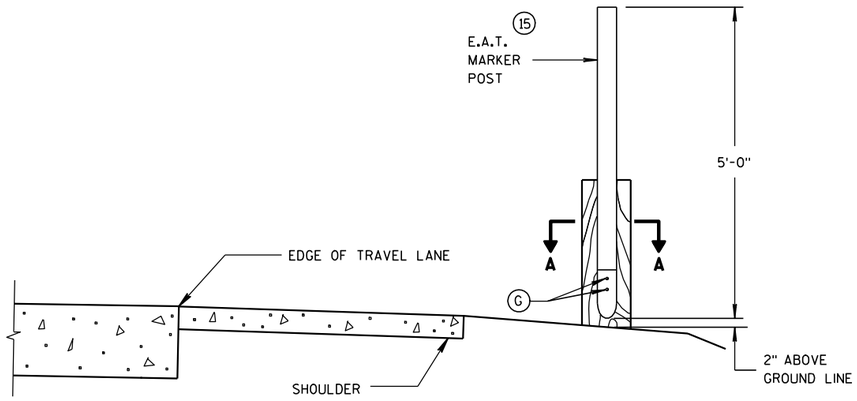

TYPICAL INSTALLATION OF E.A.T.
MARKER POST BACKSIDE OF POST NO. 1
(E.A.T. AND RAIL REMOVED FOR CLARITY)

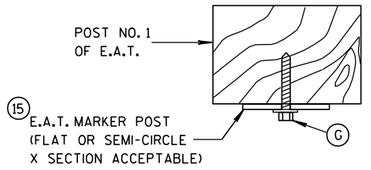

SECTION A-A

STEEL PLATE BEAM GUARD
ENERGY ABSORBING TERMINAL

STATE OF WISCONSIN
DEPARTMENT OF TRANSPORTATION

APPROVED
4-12-10
DATE
/S/ Jerry H. Zogg
ROADWAY STANDARDS ENGINEER
89
FHWA

6

S.D.D. 14 B 24-7c

6

S.D.D. 14 B 24-7c

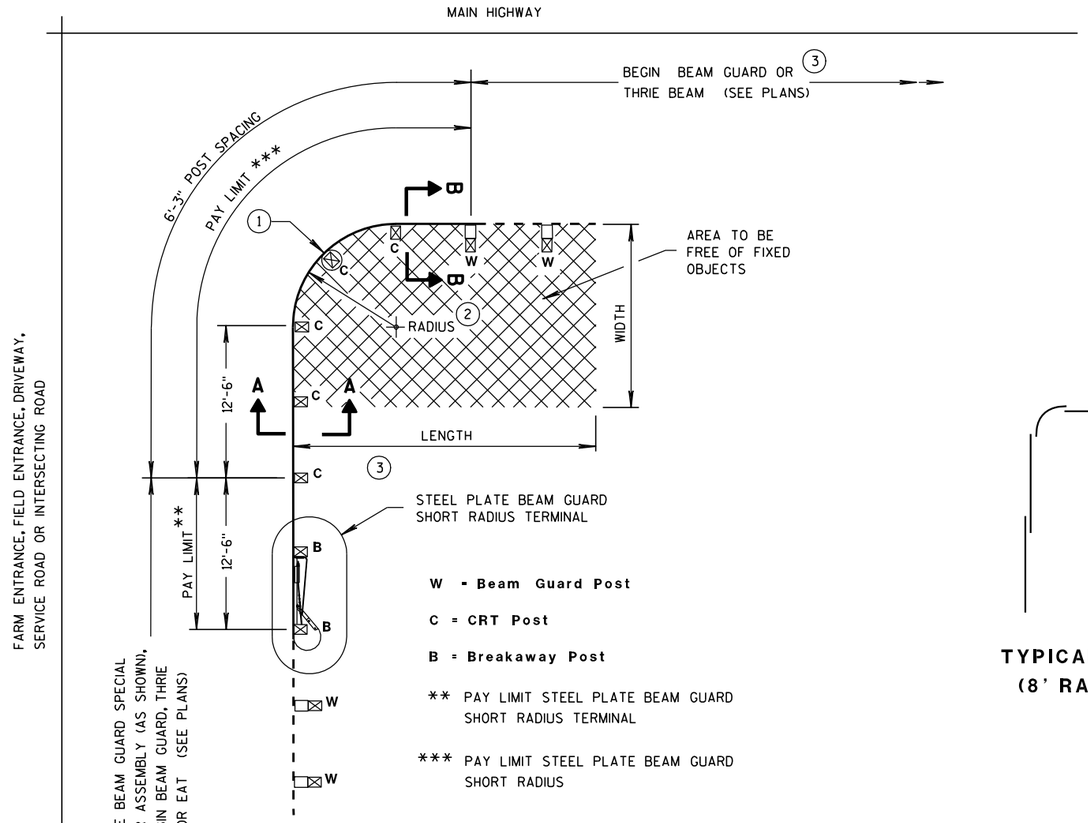

TYPICAL LAYOUT
(8' RADIUS SHOWN)

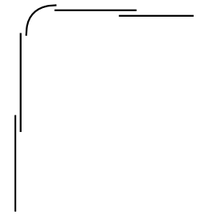

TYPICAL LAP SPLICES
(8' RADIUS SHOWN)

GENERAL NOTES

ALL ANGLES, CHANNELS, AND PLATES SHALL CONFORM TO THE REQUIREMENTS OF ASTM A36 AND THE STRUCTURAL TUBING SHALL CONFORM TO ASTM A 500. WELDING SHALL MEET THE CURRENT REQUIREMENTS OF THE AMERICAN WELDING SOCIETY STRUCTURAL WELDING CODE ANSI/AWS D1.1. ALL STRUCTURAL STEEL SHALL BE GALVANIZED IN ACCORDANCE WITH ASTM A 123. PUNCHING, DRILLING, CUTTING, OR WELDING WILL NOT BE PERMITTED AFTER GALVANIZING. FURNISH AND INSTALL HARDWARE PER STANDARD SPECIFICATION 614.2. UNLESS NOTED OTHERWISE.

SHOP BEND CURVED RAIL SECTIONS.

SEE STANDARD DETAIL DRAWING 14 B 15 FOR OTHER DETAIL.

(1) ON THE 8 FOOT RADIUS INSTALLATION, DO NOT INSTALL BUTTON HEAD BOLT AT CENTER CRT POST.

(2) RADIUS FROM 8' - 36'. SEE PLAN.

(3) HEIGHT TRANSITION MAY BE REQUIRED. SEE PLAN OR PROJECT ENGINEER.

(4) 5/8" ø X 1'-6" BUTTON HEAD BOLT AND RECESS NUT WITH ROUND WASHER UNDER NUT.

RADIUS	NUMBER OF CRT POSTS	*NUMBER AND LENGTH OF CURVED RAILS	REQUIRED AREA FREE OF FIXED OBJECTS (LENGTH x WIDTH)
8'	5	1 at 12.5'	25' x 15'
16'	7	1 at 25'	30' x 15'
24'	9	1 at 25' and 1 at 12.5'	40' x 20'
32'	11	2 at 25'	50' x 20'

* THE NUMBER OF RAILS IS BASED ON A 90° INTERSECTION. SEE PLAN FOR NON 90° INSTALLATIONS.

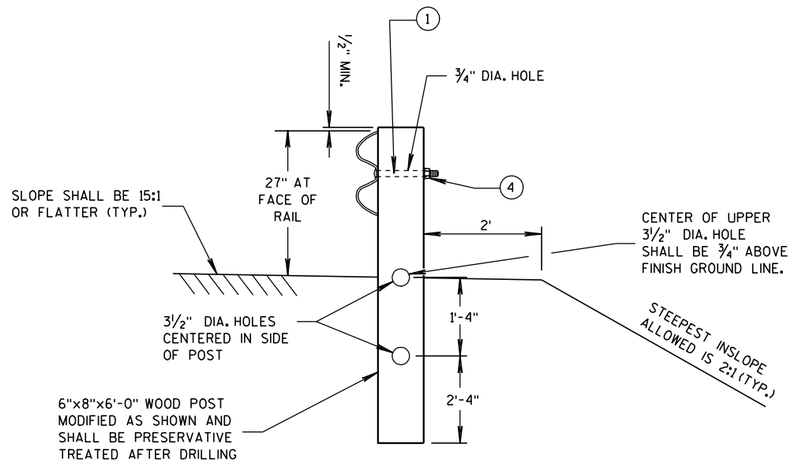

SECTION A-A
(CRT POST)

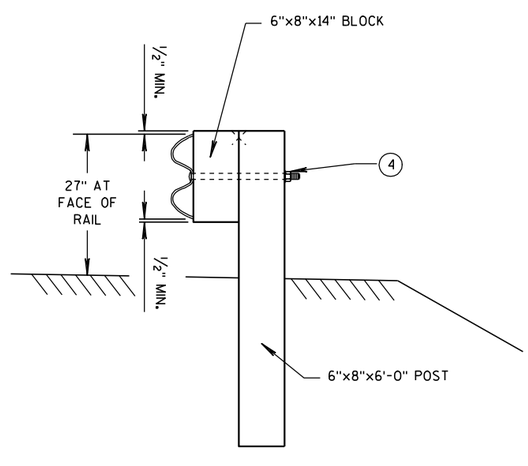

SECTION B-B
(BEAM GUARD POST)

STEEL PLATE BEAM GUARD SHORT RADIUS TERMINAL

STEEL PLATE BEAM GUARD SHORT RADIUS TERMINAL

STATE OF WISCONSIN
DEPARTMENT OF TRANSPORTATION

6

S.D.D. 14 B 27-1a

6

S.D.D. 14 B 27-1a

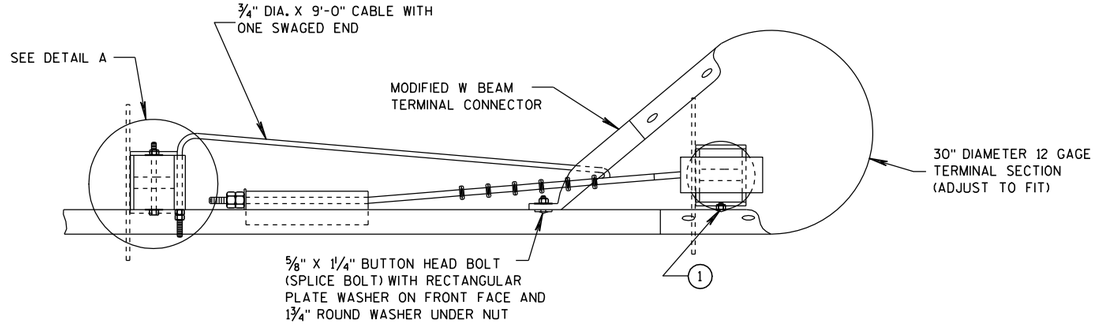

PLAN VIEW

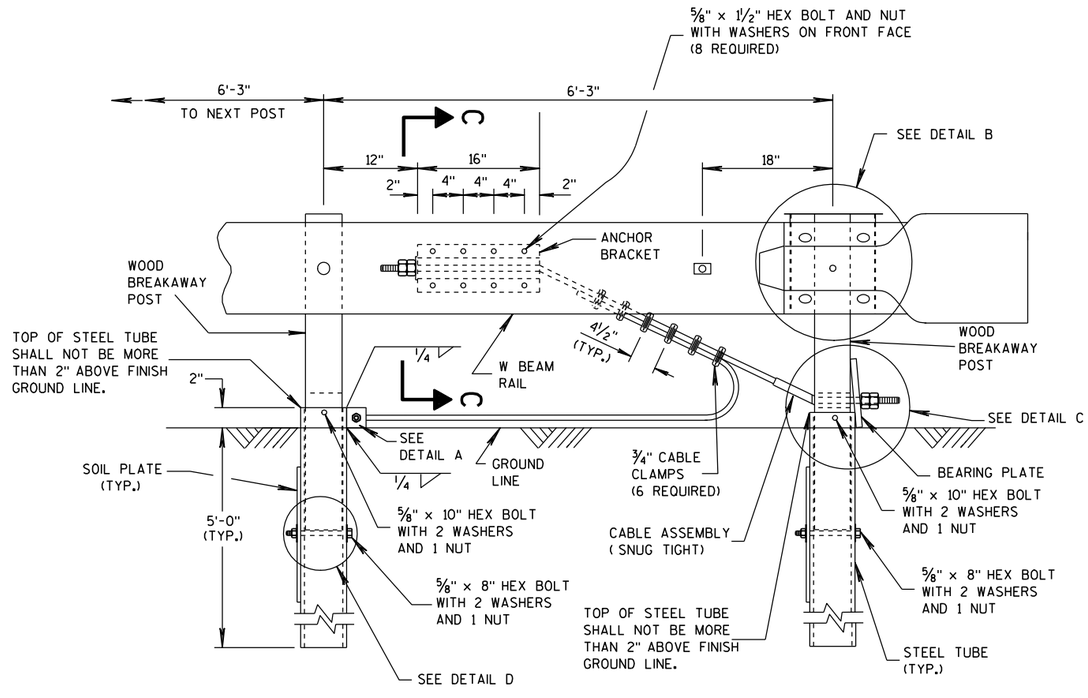

ELEVATION VIEW

STEEL PLATE BEAM GUARD SHORT RADIUS TERMINAL

GENERAL NOTES

(1) ATTACH W BEAM RAIL TO THE STEEL PIPE WITH A ⅝" X 2" BUTTON HEAD BOLT WITH NO WASHER. CONNECTION TO THE POST IS NOT REQUIRED.

INSTALL GALVANIZED ¾" (6X19) PREFORMED WIRE OR INDEPENDENT WIRE ROPE CORE CONFORMING TO AASHTO M 30. MANUFACTURE WIRE ROPE OUT OF IMPROVED PLOW STEEL WITH A MINIMUM BREAKING STRENGTH OF 42,800 PSI.

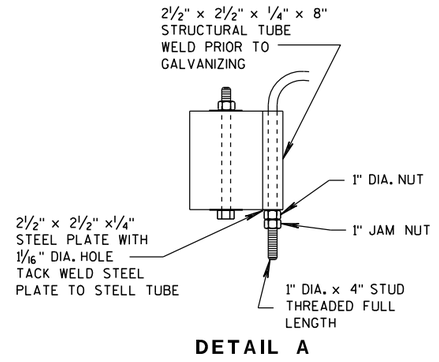

DETAIL A

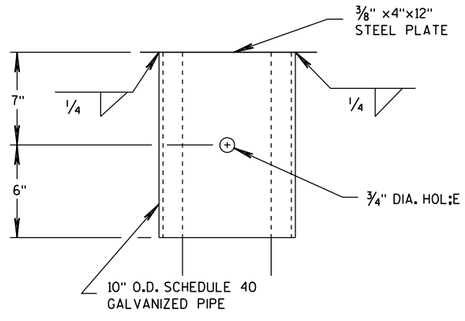

DETAIL B

(BEAM GUARD AND TERMINAL SECTION NOT SHOWN)

STEEL PLATE BEAM GUARD SHORT RADIUS TERMINAL

STATE OF WISCONSIN
DEPARTMENT OF TRANSPORTATION

6

S.D.D. 14 B 27-1b

6

S.D.D. 14 B 27-1b

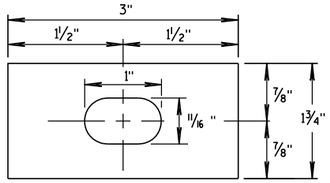

RECTANGULAR PLATE WASHER

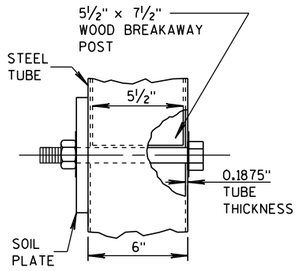

DETAIL D

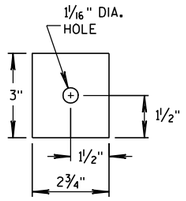

END PLATE

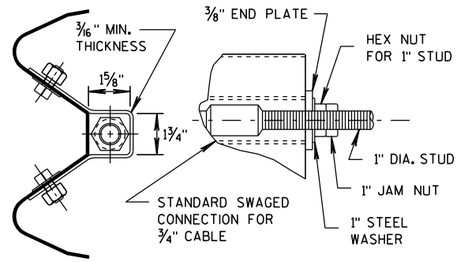

SECTION C-C
(END PLATE REMOVED)

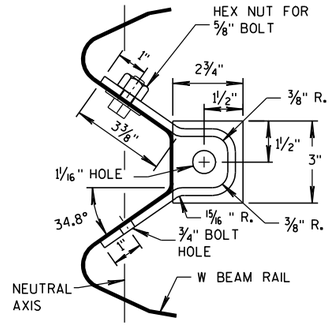

ANCHOR BRACKET

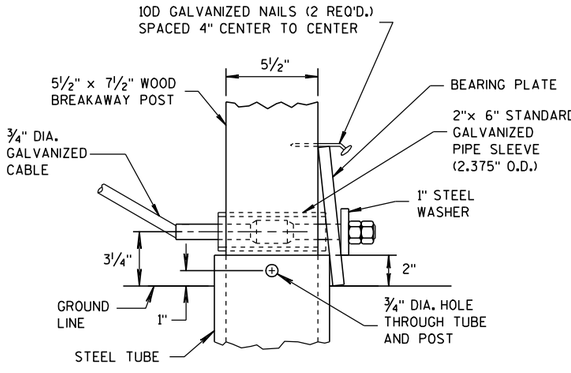

DETAIL C

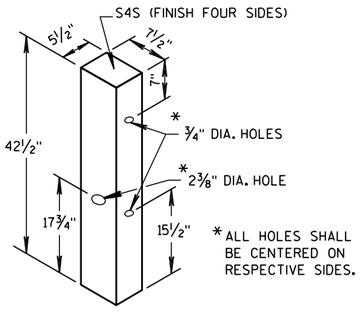

WOOD BREAKAWAY POST

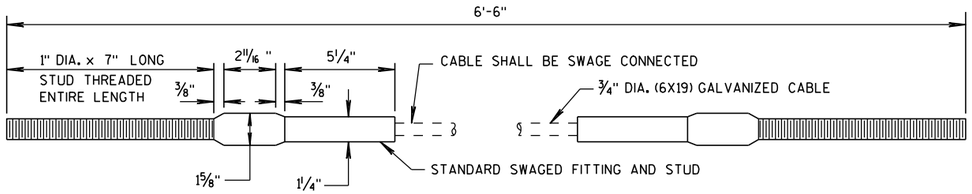

CABLE ASSEMBLY

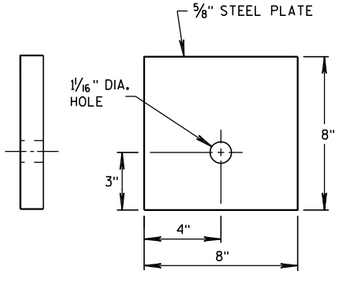

BEARING PLATE

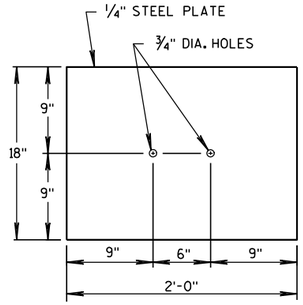

SOIL PLATE

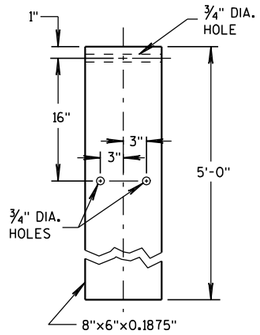

STEEL TUBE

STEEL PLATE BEAM GUARD
SHORT RADIUS TERMINAL

STATE OF WISCONSIN
DEPARTMENT OF TRANSPORTATION

APPROVED
12/18/08 DATE
/S/ Jerry H Zogg
ROADWAY STANDARDS ENGINEER
92
ENT
FHWA

6

S.D.D. 14 B 27-1c

6

S.D.D. 14 B 27-1c

GENERAL NOTES

(1) WOOD OR STEEL POSTS (w6X9 OR w6X8.5) MAY BE USED. DO NOT INTERMIX WOOD AND STEEL POSTS. INSTALL STEEL POSTS WITH HOLES ON APPROACHING TRAFFIC SIDE.

(2) USE WOOD OR APPROVED PLASTIC BLOCKOUTS. WOOD BLOCKOUTS MAY BE CONSTRUCTED OUT OF TWO OR MORE WOOD BLOCKOUTS. SEE ALTERNATE WOOD BLOCKOUT DETAIL. DIMENSIONS OF APPROVED PLASTIC BLOCKOUTS MAY VARY.

(3) IF ROCK IS ENCOUNTERED DURING EXCAVATION, PROVIDE A HOLE 12 INCHES IN DIAMETER EXTENDING 20 INCHES DEEP INTO THE ROCK. PLACE APPROXIMATELY 2½ INCHES OF GRANULAR MATERIAL IN THE BOTTOM OF THE HOLE. CUT THE POSTS THE TO LENGTH AMD INSTALL. BACKFILL WITH EXCAVATED MATERIAL AND COMPACT. BACKFILL IS TO BE FREE OF LARGE ROCKS.

(4) WHEN THE DISTANCE FROM BACK OF POST TO SHOULDER HINGE POINT IS LESS THAN 2 FEET INSTALL LONGER POST AT HALF POST SPACING (K).

(5) FOR NEW MGS INSTALLATION TOP OF W-BEAM RAIL TOLERANCE IS ± 1". FOR EXISTING MGS INSTALLATION TOP OF W-BEAM IS BETWEEN 27¾" TO 32".

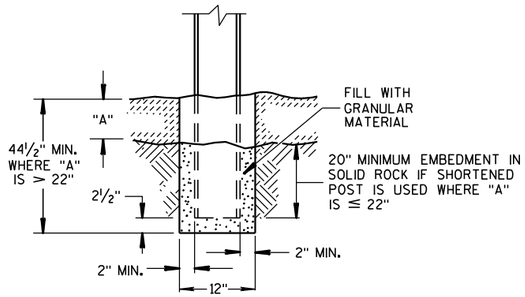

END VIEW
SETTING STEEL OR WOOD POST IN ROCK (3)

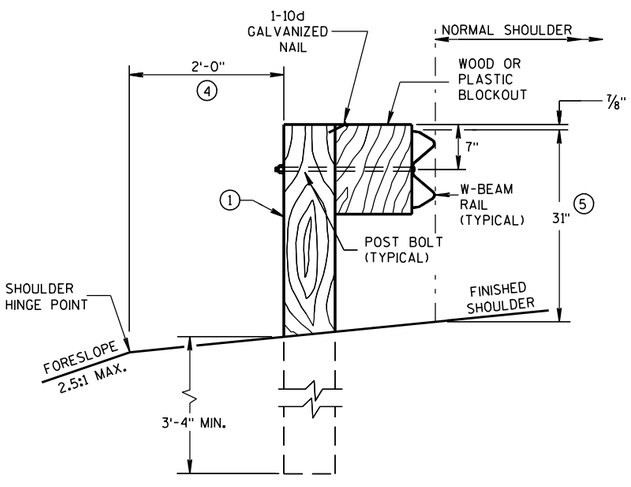

END VIEW

LOCATED ALONG A ROADWAY SHOULDER
STANDARD INSTALLATION

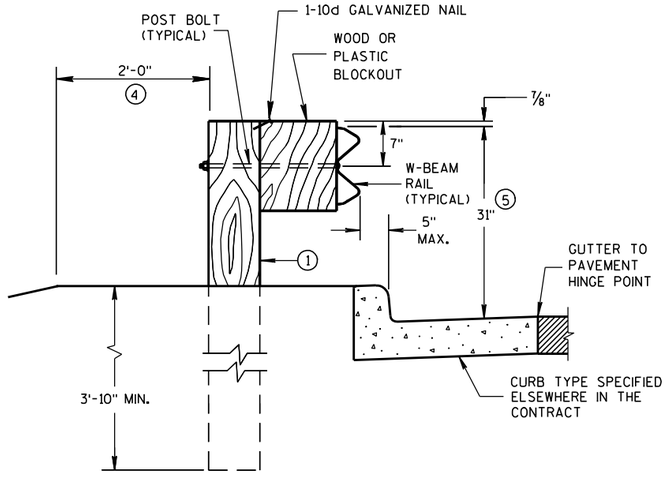

END VIEW

LOCATED ALONG A CURBED ROADWAY

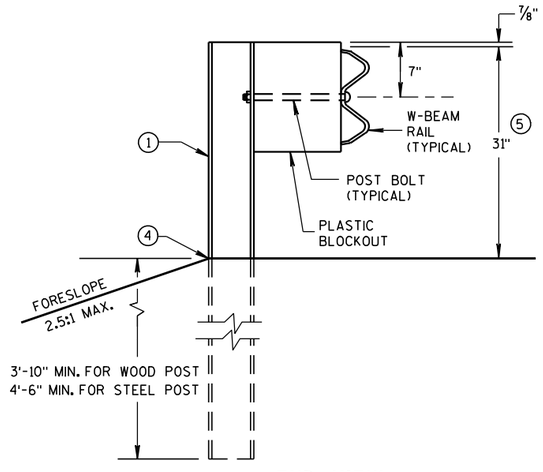

END VIEW

MGS LONGER POST AT HALFPOST SPACING W BEAM (K)

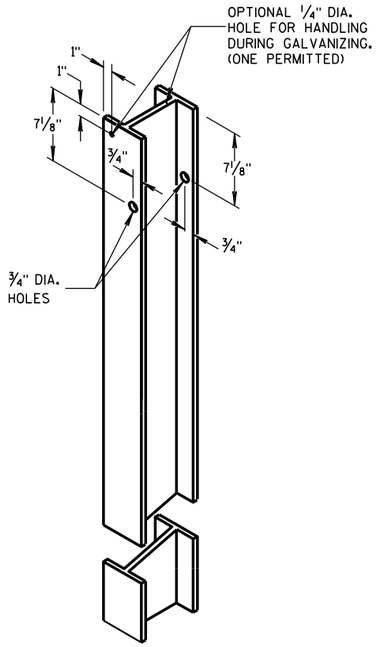

STEEL POST &
HOLE PUNCHING DETAIL
(w6X9) (1)

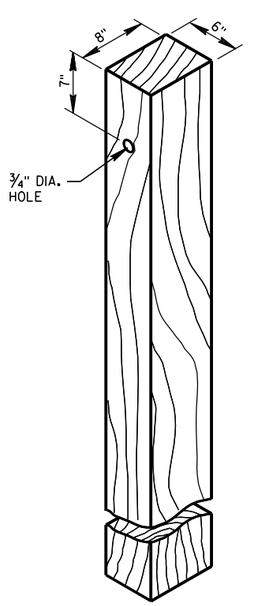

WOOD POST
(6" X 8") NOMINAL (1)

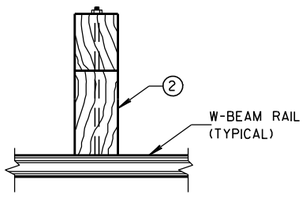

PLAN VIEW
WOOD POST,
BLOCKOUT & BEAM

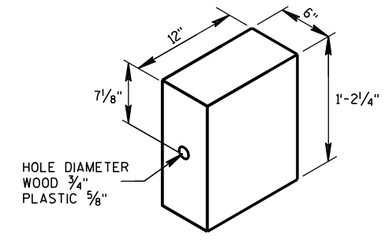

WOOD OR
PLASTIC BLOCKOUT (2)

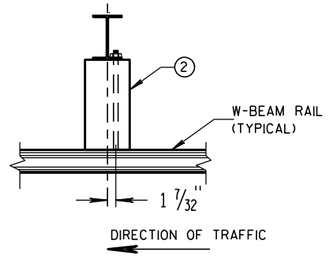

PLAN VIEW
STEEL POST,
PLASTIC BLOCKOUT & BEAM

MIDWEST GUARDRAIL SYSTEM
(MGS) GUARDRAIL

STATE OF WISCONSIN
DEPARTMENT OF TRANSPORTATION

6

S.D.D. 14 B 42-2a

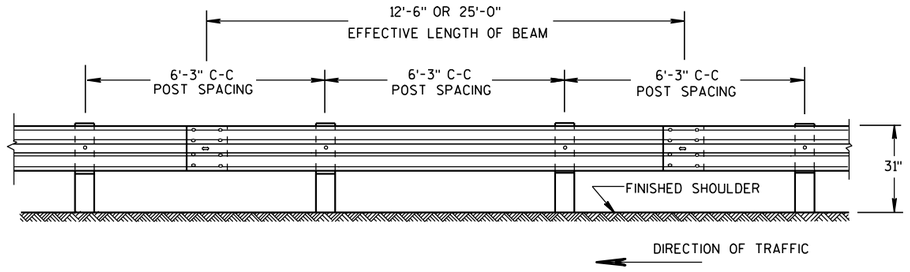

FRONT VIEW

POST SPACING STANDARD INSTALLATION

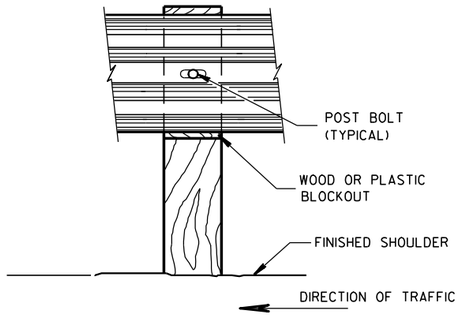

FRONT VIEW AT WOOD POST

GENERAL NOTES

1. PROVIDE TYPE "H" SILVER REFLECTIVE SHEETING ON ALL REFLECTORS EXCEPT THOSE LOCATED ALONG THE LEFT EDGE OF ONE-WAY ROADWAYS, WHICH SHALL BE PROVIDED WITH TYPE "H" YELLOW REFLECTIVE SHEETING.
2. DO NOT INSTALL REFLECTORS ON THE FIRST 50 FEET OF THE APPROACH END OF THE ENERGY ABSORBING TERMINAL. RAIL SPLICE LOCATIONS ARE THE ONLY ACCEPTABLE LOCATIONS FOR REFLECTORS.
3. REVERSE EVERY OTHER REFLECTOR FOR 2-WAY VISIBILITY. THE CONTRACTOR MAY FURNISH TWO-SIDED REFLECTORS IN LIEU OF ONE-SIDED REFLECTORS.
4. PROVIDE AN ANGLE OF BEND OF 90° ± 1° FOR TWO-SIDED REFLECTORS.
5. 25 FEET OF HALF POST SPACING IS REQUIRED ON APPROACH AND DEPARTURE ENDS OF QUARTER POST SPACING.

POST BOLTS ARE A 5/8" DIAMETER ASTM A307 GUARDRAIL BOLT. A POST BOLT REQUIRES 5/8" DIAMETER A563A DOUBLE RECESSED (DR) HEAVY HEX NUT AND 5/8" DIAMETER F844 FLAT WASHER. POST BOLTS MAY BE LONGER IF MULTIPLE BLOCKOUTS ARE BEING USED.

GUARD RAIL SPLICE BOLTS ARE A 5/8" DIAMETER ASTM A307 GUARDRAIL HEAD BOLT. A GUARDRAIL SPLICE BOLT REQUIRES 5/8" DIAMETER A563A DOUBLE RECESSED (DR) HEAVY HEX NUT.

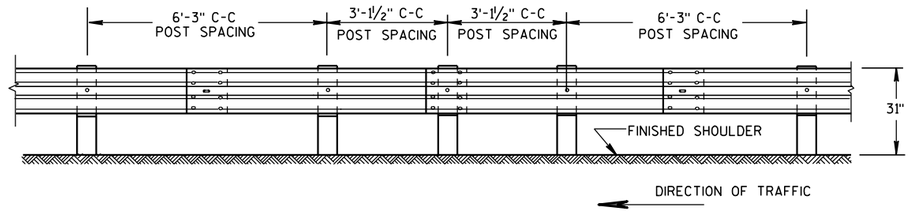

FRONT VIEW

HALF POST SPACING (HS) AND HALF POST SPACING WITH LONGER POSTS (K)

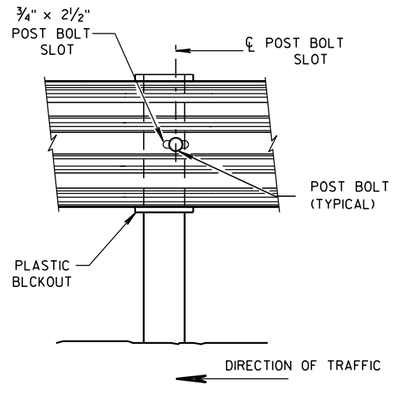

FRONT VIEW AT STEEL POST

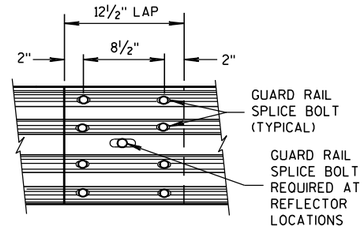

FRONT VIEW

MID-SPAN BEAM SPLICE

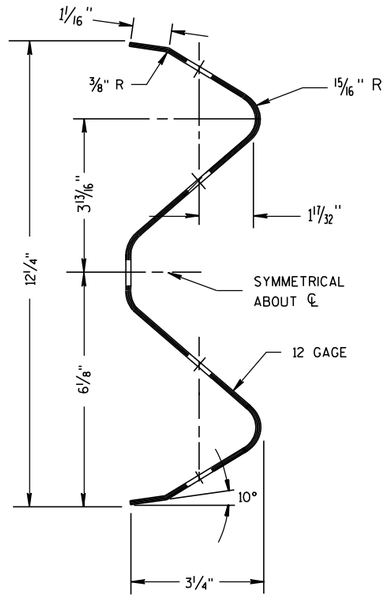

SECTION THRU W-BEAM RAIL

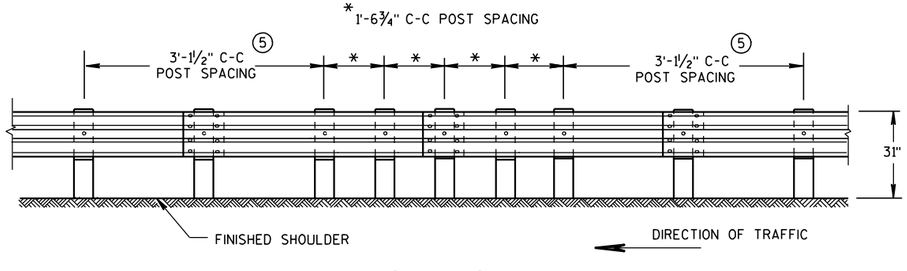

FRONT VIEW

QUARTER POST SPACING (QS)

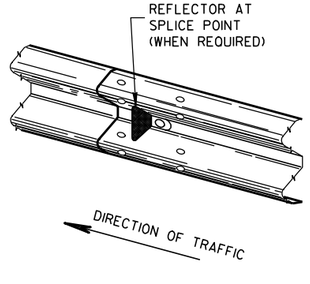

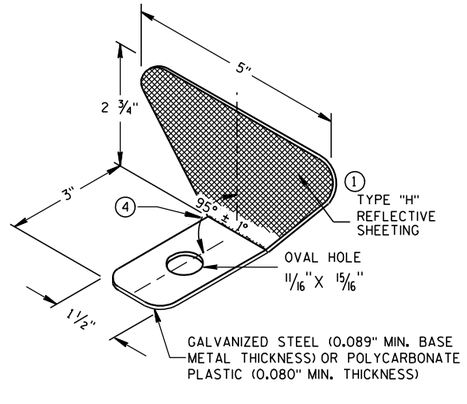

ONE SIDED REFLECTOR DETAIL AND TYPICAL INSTALLATION ①

REFLECTOR SPACING ②

	BEAM GUARD LENGTH	REFLECTOR SPACING	NO. SURFACES REFLECTORIZED	MIN. NO. REFLECTORS
ONE WAY TRAFFIC	< 200'	50' C-C	1	3
	> 200'	100' C-C	1	
TWO WAY TRAFFIC	< 200'	25' C-C	1 ③	6
	> 200'	50' C-C	1	
TWO WAY TRAFFIC	< 200'	50' C-C	2 ④	3
	> 200'	100' C-C	2	

MIDWEST GUARDRAIL SYSTEM
(MGS) GUARDRAIL

STATE OF WISCONSIN
DEPARTMENT OF TRANSPORTATION

S.D.D. 14 B 42-2b

S.D.D. 14 B 42-2b

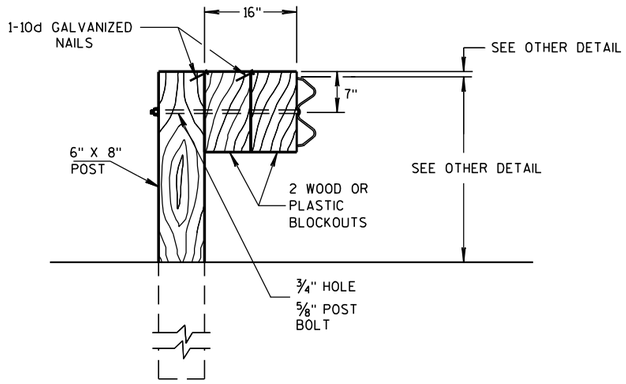

DETAIL FOR 16" BLOCKOUT DEPTH

IT IS ACCEPTABLE TO USE BLOCKOUTS UP TO 16" DEEP TO INCREASE THE POST OFFSET TO AVOID UNDERGROUND OBSTACLES. THERE IS NO LIMIT TO THE NUMBER OF POSTS THAT CAN HAVE ADDITIONAL BLOCKOUTS UP TO 16" DEEP.

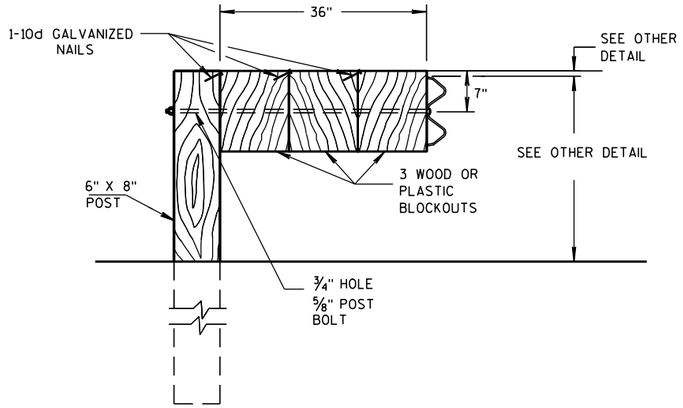

DETAIL FOR 36" BLOCKOUT DEPTH

NOTES: UNDER SPECIAL CIRCUMSTANCES, SUCH AS AVOIDING OBSTACLES THAT ARE NOT RELOCATED, IT IS ACCEPTABLE TO INSTALL ADDITIONAL BLOCKOUTS TO OBTAIN UP TO 36" DEPTH FOR ONE OR TWO POSTS IN A SECTION OF GUARDRAIL.

DO NOT USE 16" OR 36" BLOCKOUTS IF IT CAUSES THE POST TO BE DRIVEN BEYOND SHOULDER HINGE POINT OR CAUSES A FIXED OBJECT TO BE WITHIN THE DEFLECTION DISTANCE OF THE BARRIER.

NOTE: 1. ALL FILLETS SHALL HAVE A MINIMUM RADIUS OF 1/16".
2. IF THE BOLT EXTENDS MORE THAN 1/4" FROM THE NUT THE BOLT SHOULD BE TRIMMED BACK.

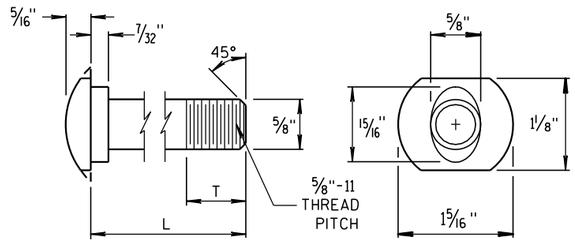

POST BOLT TABLE

L	T (MIN.)
1 1/4"	1 1/8"
2"	1 3/4"
10"	4"
14"	4 1/16"
18"	4"
21"	4 1/16"
25"	4"

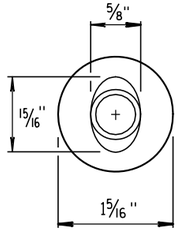

ALTERNATE BOLT HEAD

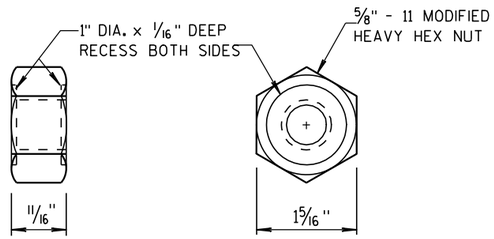

POST BOLT AND RECESS NUT

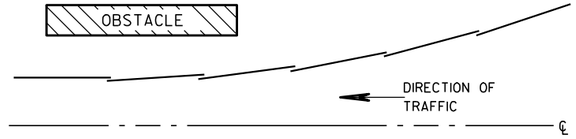

PLAN VIEW

BEAM LAPPING DETAIL

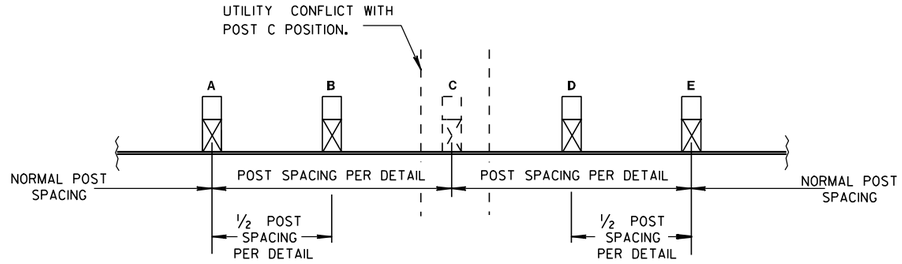

POST DRIVING FOR CONTINUOUS UNDERGROUND OBSTRUCTION

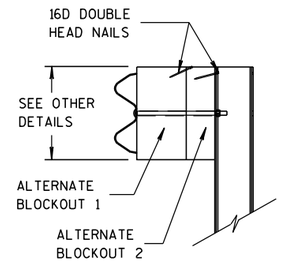

SIDE VIEW

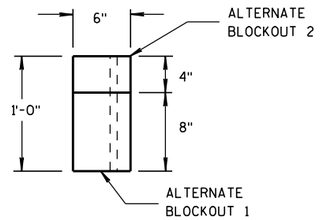

TOP VIEW

ALTERNATE WOOD BLOCKOUT DETAIL

MIDWEST GUARDRAIL SYSTEM (MGS) GUARDRAIL

STATE OF WISCONSIN
DEPARTMENT OF TRANSPORTATION

APPROVED

11/15/2011
DATE

/S/ Jerry H. [illegible]
ROADWAY STANDARDS ENGINEER

FHWA

95

ENT

6

S.D.D. 14 B 42-2c

GENERAL NOTES

(A) THE SLOPE IN THE AREA BOUNDED BY THE EXTENDED VEHICLE RUNOUT PATH (EVRP), THE HINGE POINT LINE (HPL),AND THE CLEAR ZONE LIMITS (CZL) SHALL BE 4:1 OR FLATTER.

(B) AFTER FINAL ASSEMBLY, RECHECK CABLE TO BE SURE IT IS TAUT AND HAS NOT RELAXED.

(C) DIFFERENT MANUFACTURES REQUIRE DIFFERENT PERFORATED W-BEAM RAIL END PANELS. SEE MANUFACTURES INFORMATION.

(D) THE TOP OF THE STEEL TUBE ON POST 1 AND POST 2 SHALL NOT BE MORE THAN 3" ABOVE THE FINISH GROUND ELEVATION.

(F) SHEETING IS ATTACHED TO 0.040 ALUMINUM SHEET AND ATTACHED TO E.A.T. HEAD USING 4 STAINLESS STEEL SELF-TAPPING SCREWS. ONE SCREW PER CORNER OF E.A.T.

(G) ½" DIAMETER X 3" LONG LAG BOLT AND WASHER.

(H) HARDWARE VARIES BETWEEN DIFFERENT MANUFACTURES. SEE MANUFACTURE'S DRAWING FOR INFORMATION.

(I) DIMENSIONS MAY VARY. SEE MANUFACTURE'S INFORMATION.

SEE SDD 14B42 FOR MORE INFORMATION.

* DO NOT ATTACH BLOCKOUTS TO POSTS 1 AND 2.

DO NOT INSTALL REFLECTORS ON THE FIRST 50 FEET OF THE APPROACH END OF THE ENERGY ABSORBING TERMINAL.

W-BEAM RAIL SPLICES ARE LOCATED AT POST NUMBER 3, AND BETWEEN POST 5 AND 6, BETWEEN POSTS 7 AND 8, AND MIDDLE OF THE SPAN AFTER POST 9.

PATTERN AND COLORS ON REFLECTIVE SHEETING TYPE H ARE TO CONFORM TO OM3-L OR OM3-R OF THE MANUAL ON UNIFORM TRAFFIC CONTROL DEVICES.

THE CENTER OF THE UPPER 3½" DIAMETER HOLE ON POST NUMBER 3 THROUGH POST 9 IS TO BE FLUSH WITH THE GROUND LINE (± ¾")

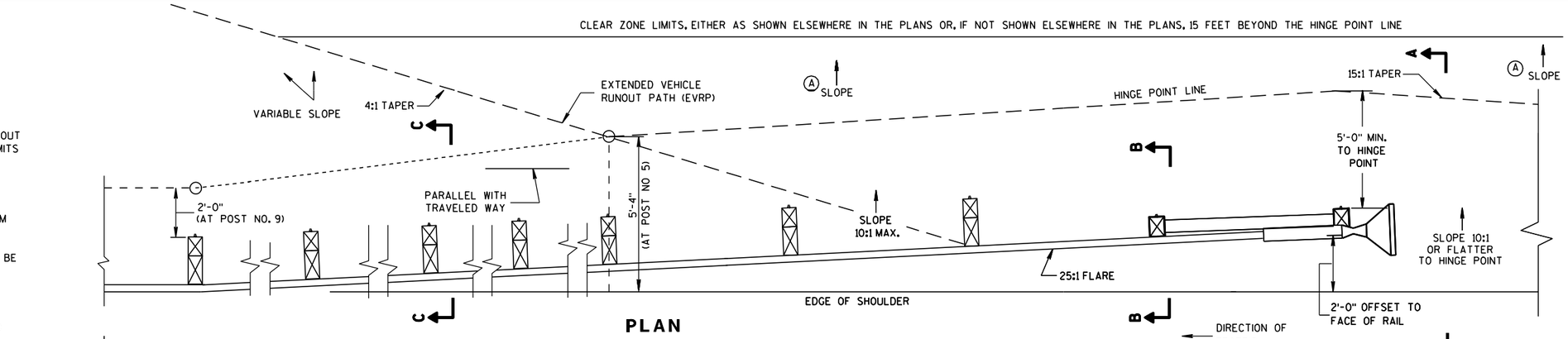

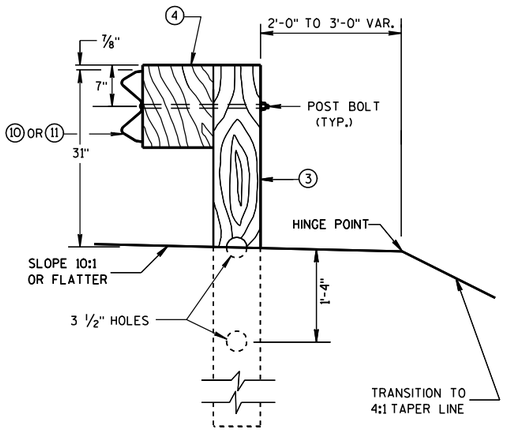

SECTION C-C
TYPICAL AT POST NOS. 3-9

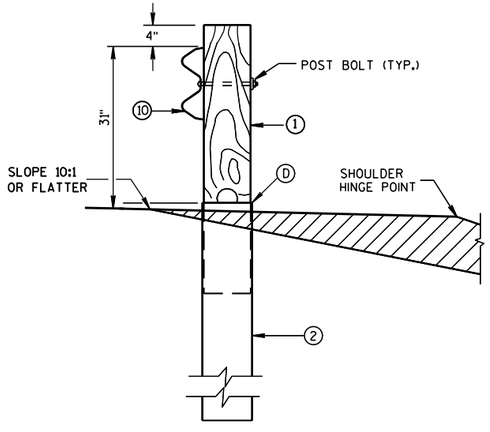

SECTION B-B
TYPICAL AT POST NO. 2*

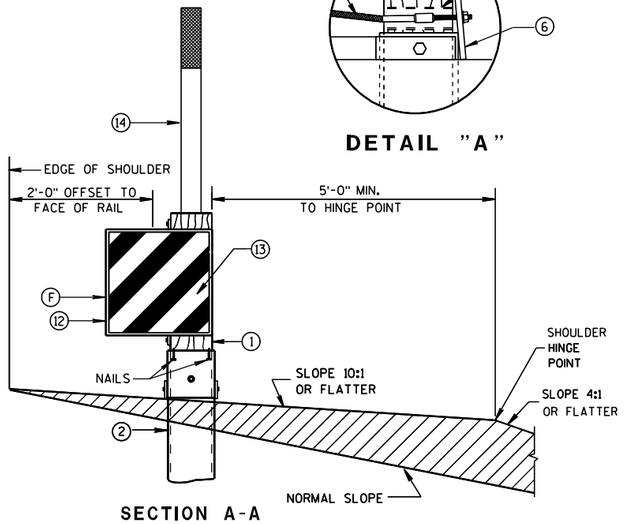

SECTION A-A
TYPICAL AT POST NO. 1*

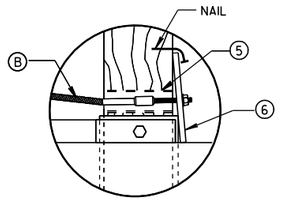

DETAIL "A"

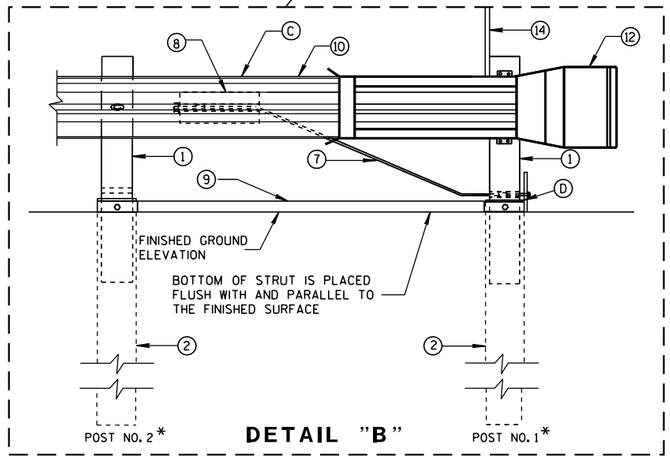

DETAIL "B"

MIDWEST GUARDRAIL SYSTEM ENERGY ABSORBING TERMINAL (MGS)

STATE OF WISCONSIN
DEPARTMENT OF TRANSPORTATION

6

S.D.D. 14 B 44-1a

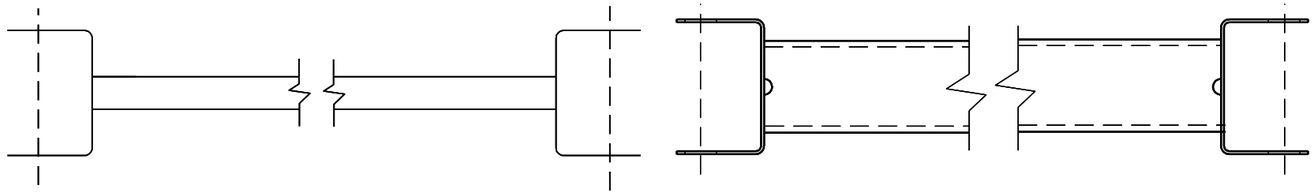

GENERIC GROUND STRUT (9) (H)

BILL OF MATERIALS

PART NO.	DESCRIPTION MATERIALS PROVIDED BY MGS EAT MANUFACTURER. SEE MANUFACTURER'S DETAILS FOR MORE INFORMATION.
(1)	WOOD BREAKAWAY POST
(2)	6" X 8" X 0.188", 6'-0" LONG FOUNDATION TUBE AT POSTS 1 AND 2
(3)	WOOD CRT
(4)	WOOD BLOCKOUT
(5)	PIPE SLEEVE
(6)	BEARING PLATE
(7)	BCT CABLE ASSEMBLY
(8)	ANCHOR CABLE BOX
(9)	GROUND STRUT
(10)	PERFORATED W-BEAM RAIL END PANEL, 12'-6" LONG.
(11)	STANDARD W-BEAM RAIL. MULTIPLE SECTIONS REQUIRED. SECTIONS VARY IN LENGTH.
(12)	END SECTION EAT
(13)	0.040" ALUMINUM SHEET WITH REFLECTIVE SHEETING TYPE H (ONLY THE SHEETING IS SUPPLIED BY THE MANUFACTURER)
(14)	EAT MARKER POST - YELLOW (SEE APPROVED PRODUCTS LIST)

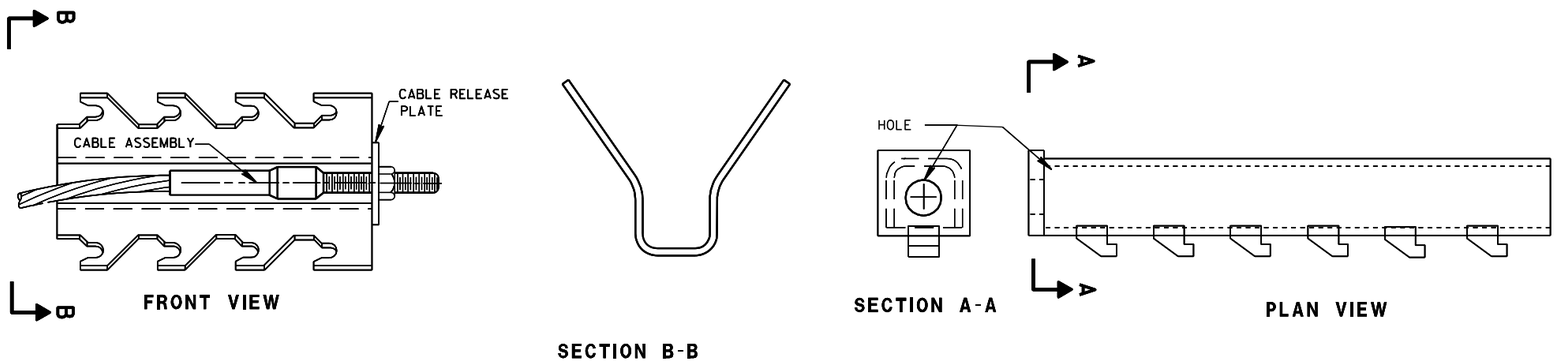

FRONT VIEW

SECTION B-B

SECTION A-A

PLAN VIEW

GENERIC ANCHOR CABLE BOX (8) (H)

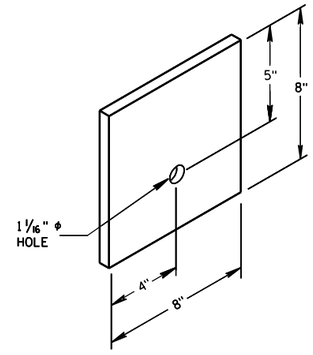

BEARING PLATE (6)

MIDWEST GUARDRAIL SYSTEM
ENERGY ABSORBING TERMINAL
(MGS)

STATE OF WISCONSIN
DEPARTMENT OF TRANSPORTATION

6

S.D.D. 14 B 44-1b

6

S.D.D. 14 B 44-1b

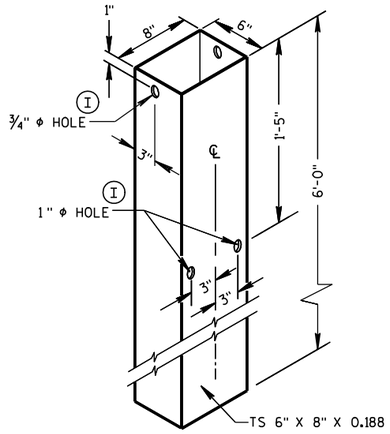

FOUNDATION TUBE (2)

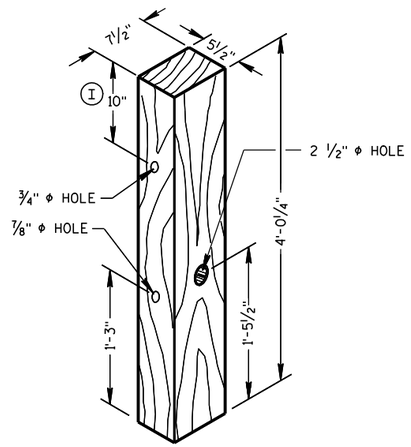

POSTS NUMBER 1 AND 2

WOOD BREAKAWAY POST (1)

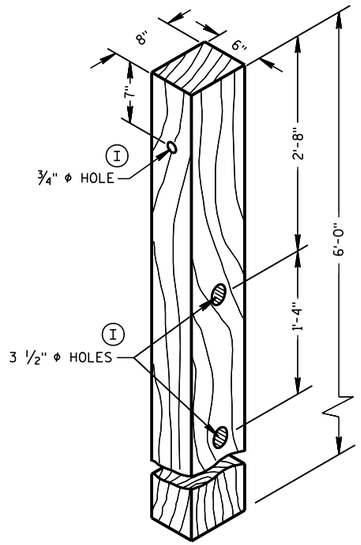

POSTS NUMBER 3-9

WOOD CRT POST (3)

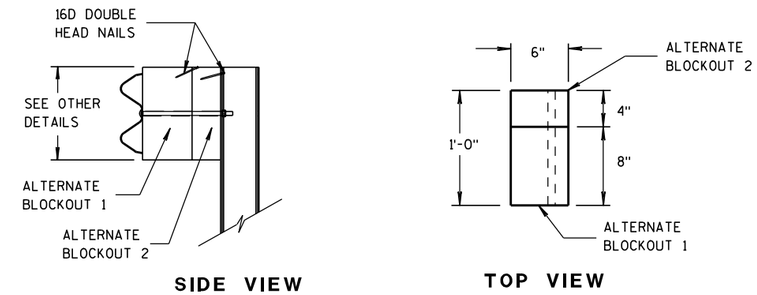

SIDE VIEW

TOP VIEW

ALTERNATE WOOD BLOCKOUT DETAIL

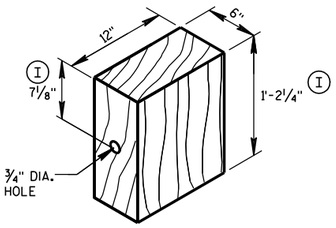

WOOD BLOCKOUT (4)

REQ'D. AT ALL POSTS EXCEPT POST NO'S 1 & 2

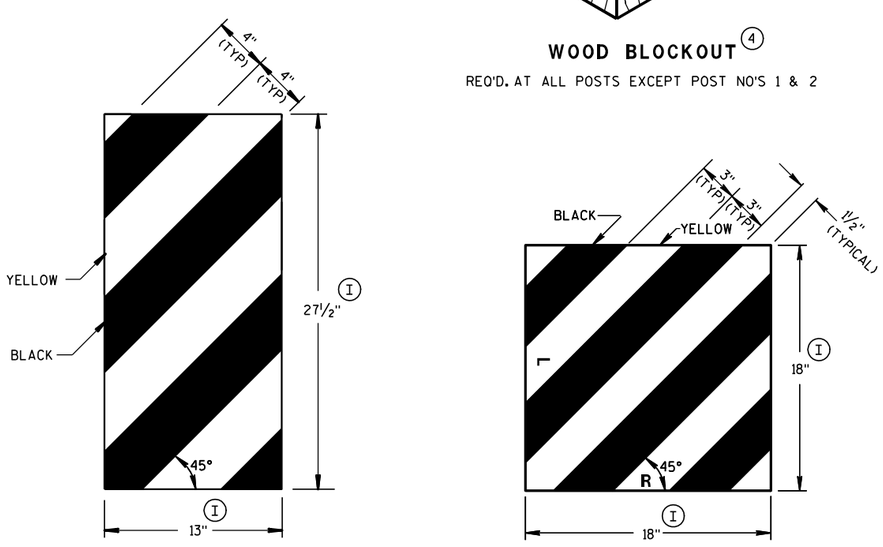

GENERIC REFLECTIVE SHEETING (13) (H)

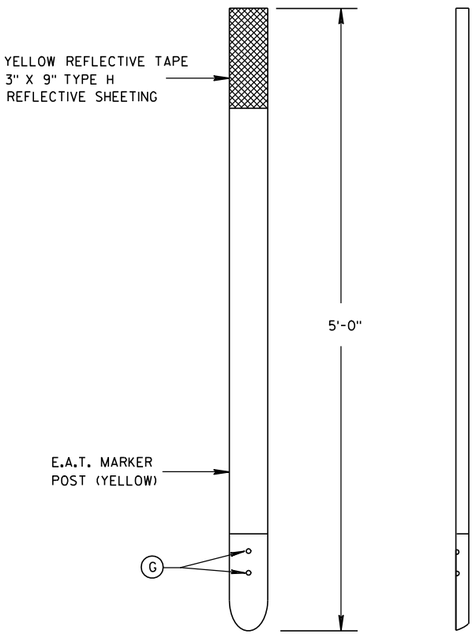

FRONT VIEW

SIDE VIEW

E.A.T. MARKER POST (14)

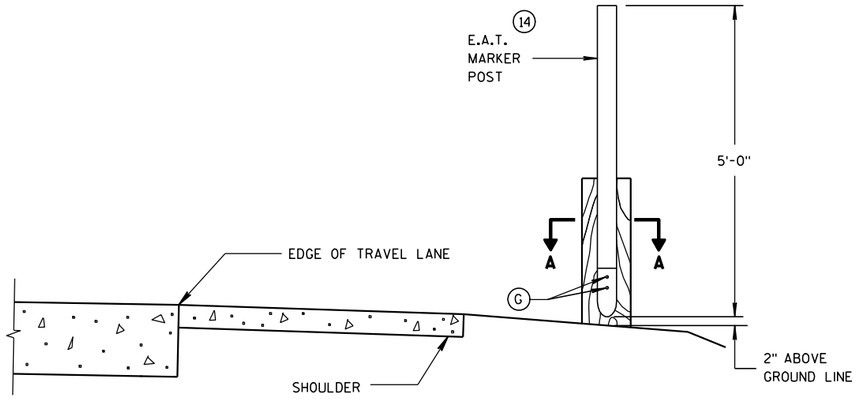

TYPICAL INSTALLATION OF E.A.T. MARKER POST BACKSIDE OF POST NO. 1

(E.A.T. AND RAIL REMOVED FOR CLARITY)

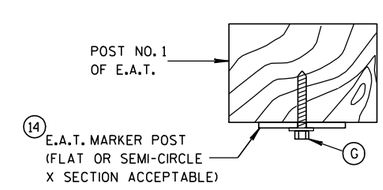

SECTION A-A

MIDWEST GUARDRAIL SYSTEM ENERGY ABSORBING TERMINAL (MGS)

STATE OF WISCONSIN
DEPARTMENT OF TRANSPORTATION

APPROVED
5/23/2011 /S/ Jerry H. Zogg
DATE ROADWAY STANDARDS DEVELOPMENT ENGINEER
FHWA

6
S.D.D. 14 B 44-1c
98

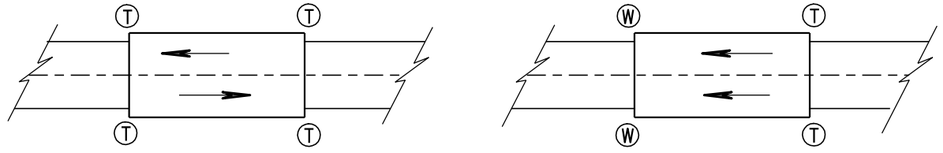

TWO WAY TRAFFIC **ONE WAY TRAFFIC**

(T) THRIE BEAM CONNECTION

(W) W-BEAM CONNECTION WHEN REQUIRED

TYPICAL LOCATIONS OF THRIE BEAM AND W-BEAM CONNECTIONS TO BRIDGE

GENERAL NOTES

BOLT THE THRIE BEAM TO ALL POSTS AND BLOCKOUTS. DRILL OR PUNCH BOLT HOLES IN THE BEAM IF THE POST SPACING IS LESS THAN 6'-3.

IF ROCK IS ENCOUNTERED DURING EXCAVATION, SEE STANDARD DETAIL DRAWING 14 B 42.

TRANSITION USES STEEL POSTS ONLY.

SEE STANDARD DETAIL DRAWING 14 B 42 FOR MORE INFORMATION.

(A) BRIDGE RAILING TYPE "W" DOES NOT REQUIRE A TERMINAL CONNECTOR.

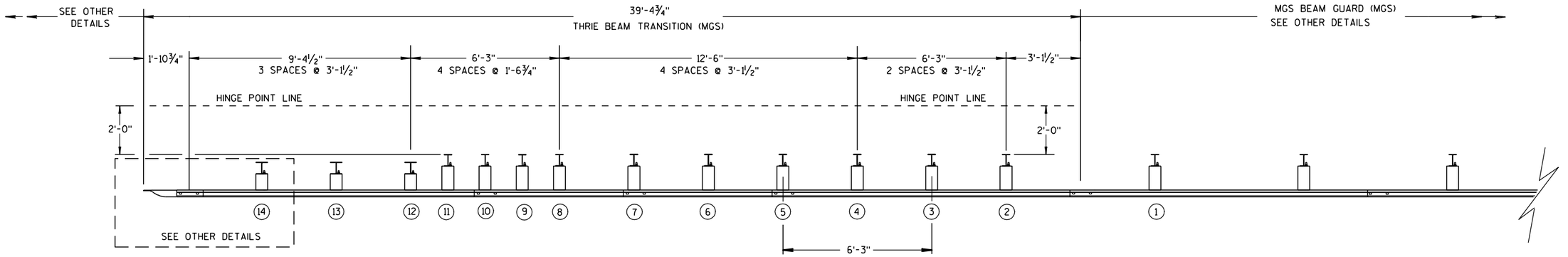

PLAN VIEW

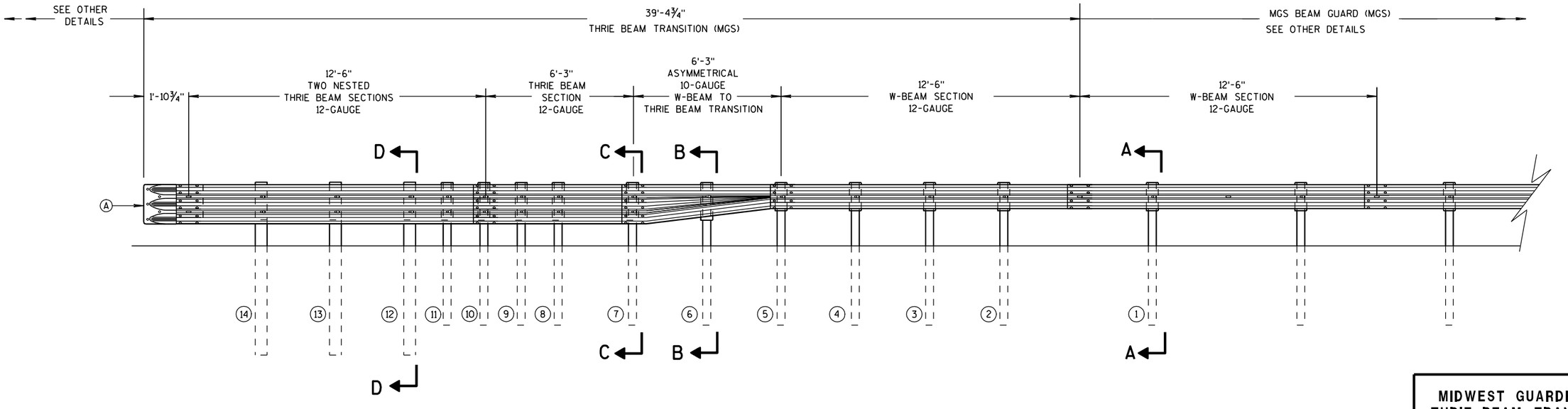

ELEVATION VIEW

MIDWEST GUARDRAIL SYSTEM THRIE BEAM TRANSITION

MIDWEST GUARDRAIL SYSTEM THRIE BEAM TRANSITION (MGS)

STATE OF WISCONSIN
DEPARTMENT OF TRANSPORTATION

6

S.D.D. 14 B 45-2a

GENERAL NOTES

(B) TOLERANCE FOR TOP OF W-BEAM RAIL IS ± 1".

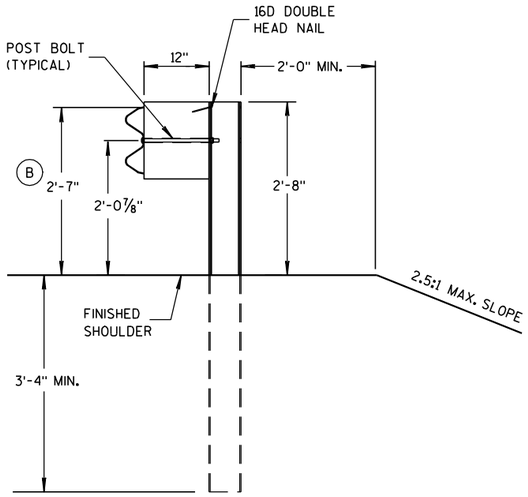

SECTION A-A

POSTS 1-5

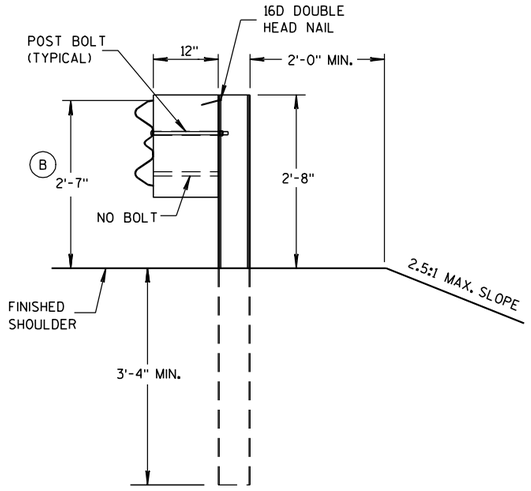

SECTION B-B

POST 6

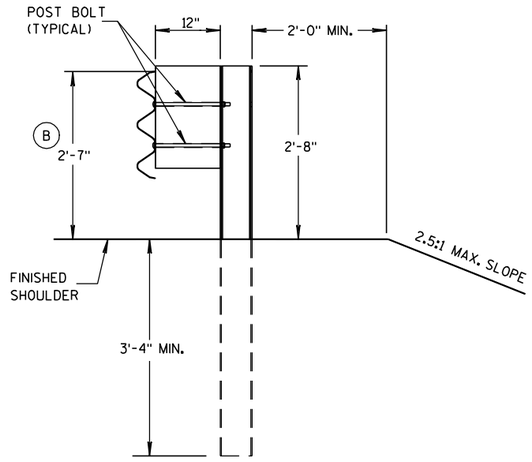

SECTION C-C

POSTS 7-11

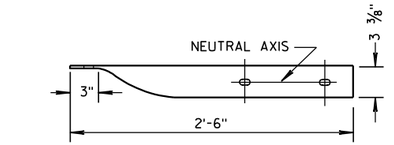

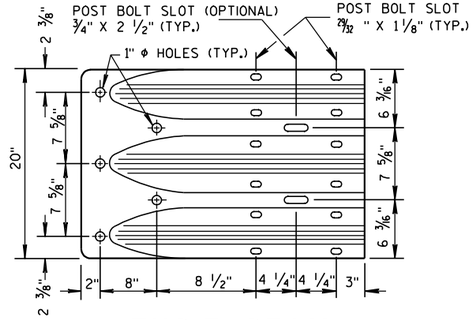

THRIE BEAM TERMINAL CONNECTOR

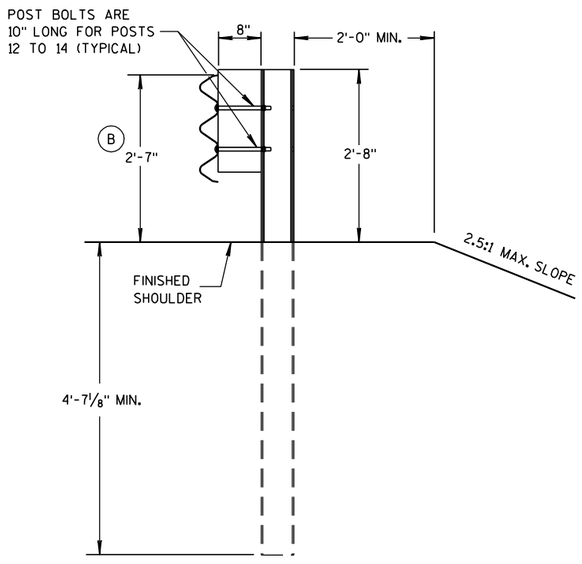

SECTION D-D

POSTS 12-14

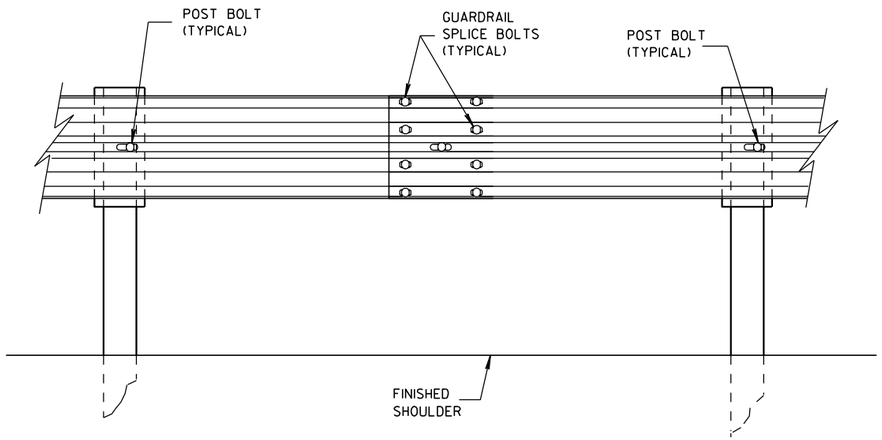

SPLICE DETAIL

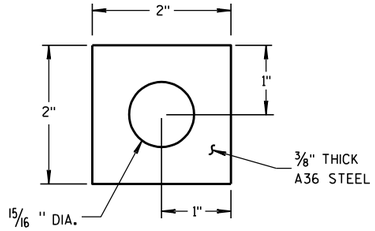

PLATE WASHER DETAIL

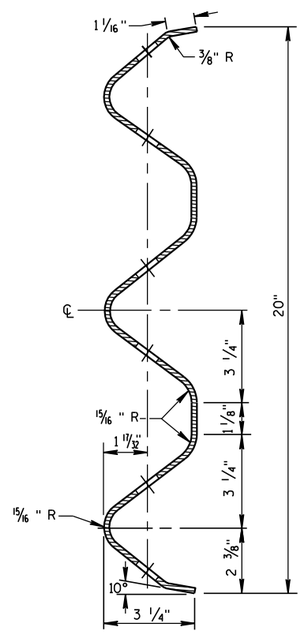

SECTION THRU THRIE BEAM RAIL ELEMENT

MIDWEST GUARDRAIL SYSTEM
THRIE BEAM TRANSITION (MGS)

STATE OF WISCONSIN
DEPARTMENT OF TRANSPORTATION

6

S.D.D. 14 B 45-2b

6

S.D.D. 14 B 45-2b

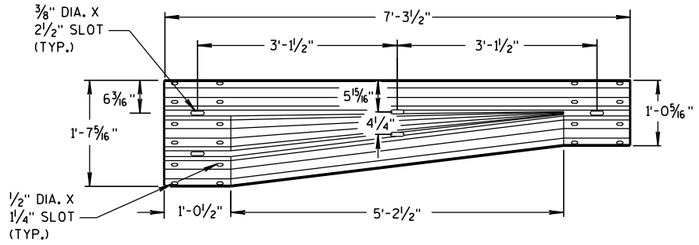

W-BEAM TO THRIE BEAM TRANSITION SECTION

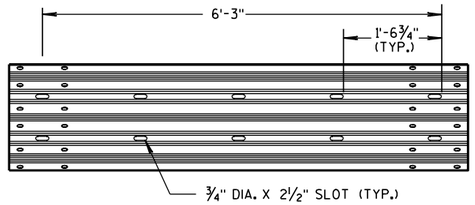

6'-3" THRIE BEAM SECTION

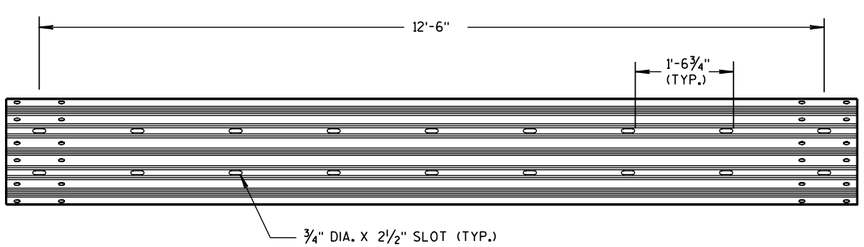

12'-6" THRIE BEAM SECTION

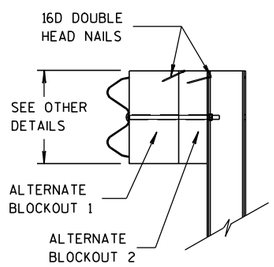

SIDE VIEW

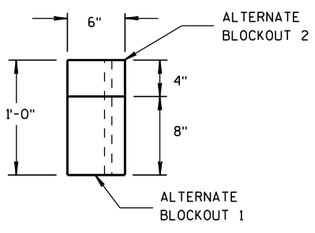

TOP VIEW

ALTERNATE WOOD BLOCKOUT DETAIL

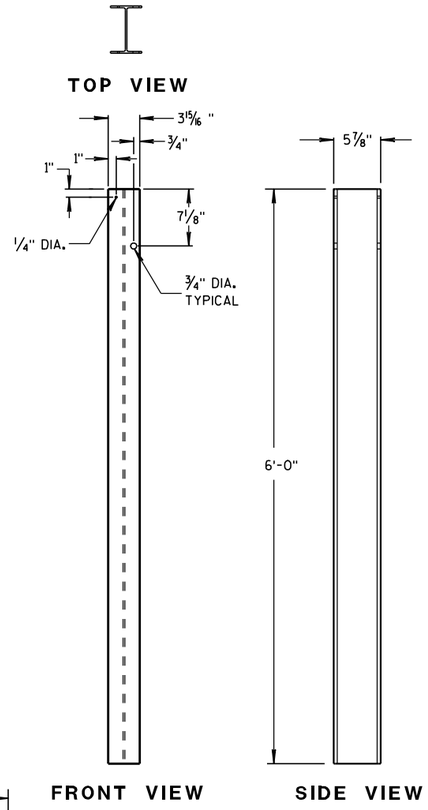

STEEL POSTS 1-5

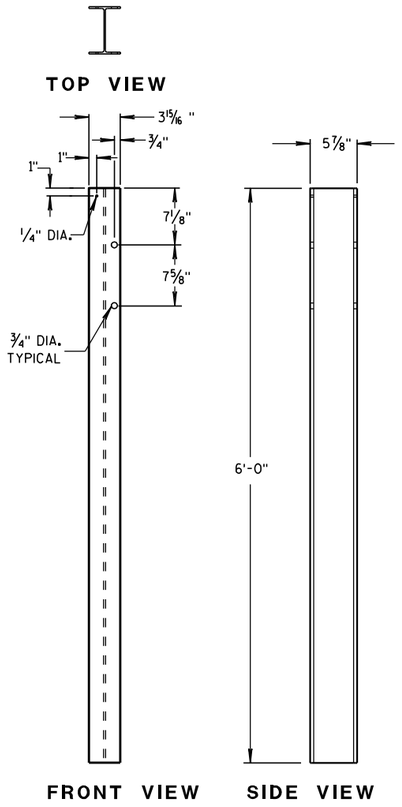

STEEL POSTS 6-11

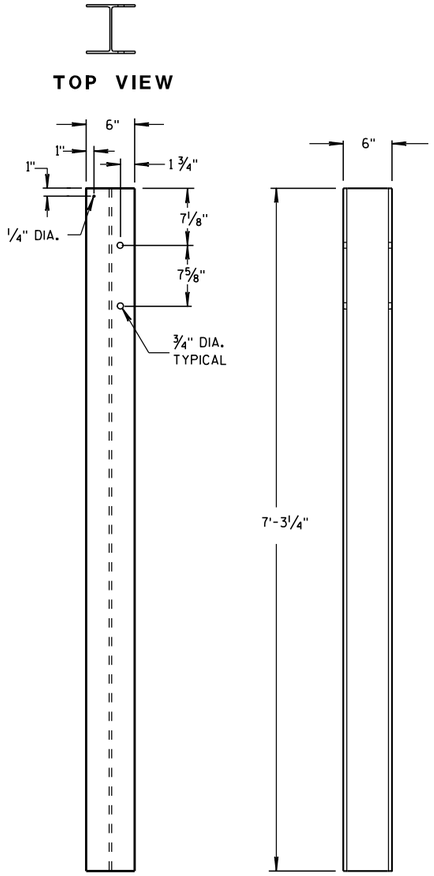

STEEL POSTS 12-14

(1) WOOD BLOCKS MAY BE CONSTRUCTED OUT OF 2 WOOD BLOCKS. SEE ALTERNATE WOOD BLOCK DETAIL.

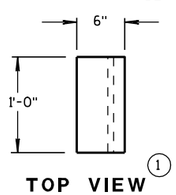

TOP VIEW (1)

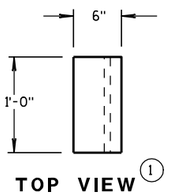

TOP VIEW (1)

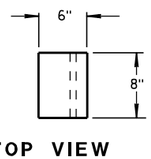

TOP VIEW

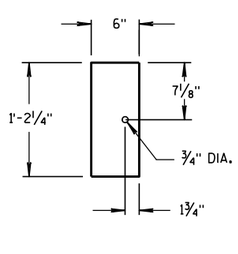

FRONT VIEW

BLOCKOUT POSTS 1-5

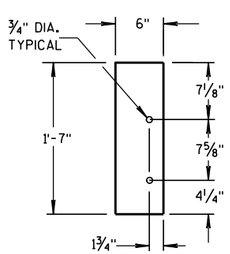

FRONT VIEW

BLOCKOUT POSTS 6-11

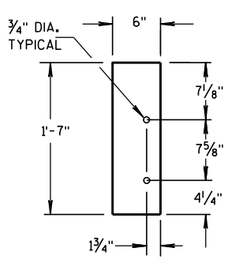

FRONT VIEW

BLOCKOUT POSTS 12-14

STEEL POST SIZES

POST NUMBER	SECTION TYPE	LENGTH
1	W6x9	72"
2	W6x9	72"
3	W6x9	72"
4	W6x9	72"
5	W6x9	72"
6	W6x9	72"
7	W6x9	72"
8	W6x9	72"
9	W6x9	72"
10	W6x9	72"
11	W6x9	72"
12	W6x15	87 1/8"
13	W6x15	87 1/8"
14	W6x15	87 1/8"

MIDWEST GUARDRAIL SYSTEM
THRIE BEAM TRANSITION (MGS)

STATE OF WISCONSIN
DEPARTMENT OF TRANSPORTATION

6

S.D.D. 14 B 45-2c

6

S.D.D. 14 B 45-2c

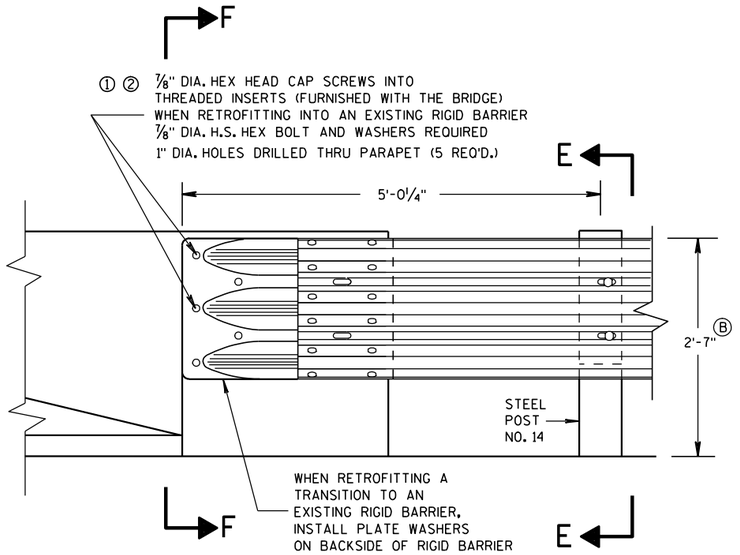

FRONT VIEW

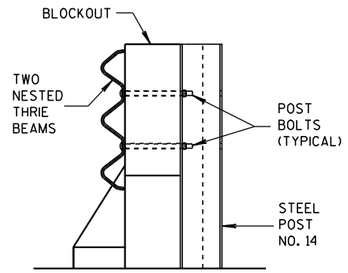

SECTION E-E

GENERAL NOTES

THESE ARE TYPICAL CONNECTION DETAILS. ADJUST THE POSTION OF CONNECTIONS TO EXISTING BRIDGES TO FIT THE ACTUAL BRIDGE AND SITE DIMENSIONS.

① INCLUDE THE PAYMENT FOR DRILLING BOLT HOLES THROUGH THE PARAPET, AND ALL BOLTS, NUTS AND WASHERS IN THE ITEM "STEEL THRIE BEAMSTRUCTURAL APPROACH".

② BOLTS MAY BE A325 BOLTS OR A449 BOLTS. BOLT LENGTH AND THREADING LENGTH ARE TO ALLOW FOR A TIGHT CONNECTION BETWEEN RIGID BARRIER AND THRIE BEAM CONNECTION PLATE. CONTRACTOR IS TO FIELD VERIFY BOLT LENGTH AND THREAD LENGTH. ONE ROUND WASHER REQUIRED BETWEEN BOLT HEAD AND THRIE BEAM CONNECTOR PLATE. BOLTS THAT EXTEND THROUGH THE PARAPET AND OUT THE BACK FACE REQUIRE A HARDENED ROUND STEEL WASHER THAT IS 2" O.D. X 5/8" THICK AND ONE PLATE WASHER. REPAIR ANY DAMAGED CONCRETE FROM BOLT INSTALLATION.

③ THE RECESS FOR A W-BEAM CONNECTION, WHICH EXISTS ON SOME PARAPETS OF THIS TYPE, SHALL BE FILLED WITH A TREATED TIMBER BLOCKOUT. BLOCKOUT SIZE IS 1'-6" X 2'-0" X 3 1/2".

Ⓑ TOLERANCE FOR TOP OF BEAM IS ± 1".

THRIE BEAM CONNECTION TO BRIDGE PARAPET WITH SQUARE ENDS

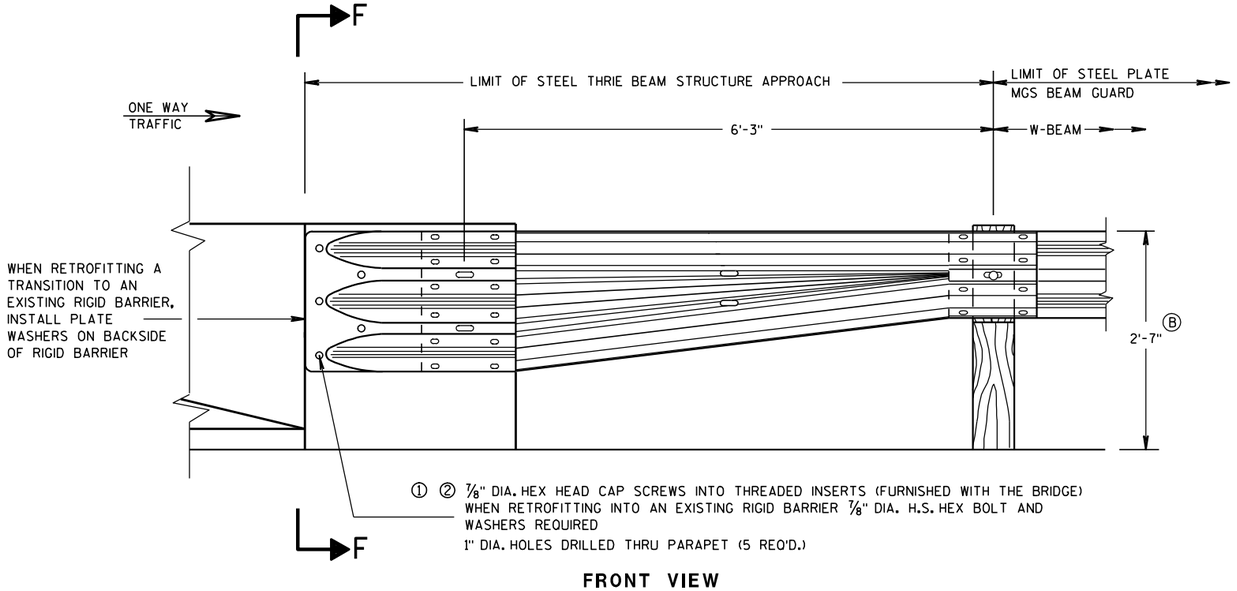

FRONT VIEW

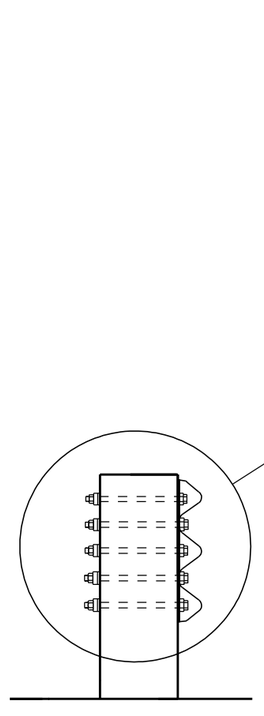

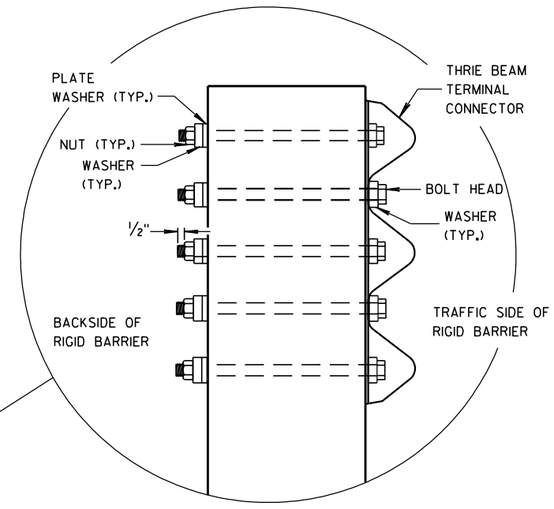

W BEAM TRANSITION AND CONNECTION TO BRIDGE PARAPETS WITH SQUARE ENDS

(USE ONLY ON THE TRAFFIC EXIT END OF ONE WAY BRIDGES)

MIDWEST GUARDRAIL SYSTEM
THRIE BEAM TRANSITION (MGS)

STATE OF WISCONSIN
DEPARTMENT OF TRANSPORTATION

APPROVED

2/8/2012 — DATE

/S/ Jerry H. Zogg — ROADWAY STANDARDS DEVELOPMENT ENGINEER

FHWA

GENERAL NOTES

THESE ARE TYPICAL CONNECTION DETAILS. ADJUST THE POSTION OF CONNECTIONS TO EXISTING BRIDGES TO FIT THE ACTUAL BRIDGE AND SITE DIMENSIONS.

① INCLUDE THE PAYMENT FOR DRILLING BOLT HOLES THROUGH THE PARAPET, AND ALL BOLTS, NUTS AND WASHERS IN THE ITEM "STEEL THRIE BEAMSTRUCTURAL APPROACH".

② BOLTS MAY BE A325 BOLTS OR A449 BOLTS. BOLT LENGTH AND THREADING LENGTH ARE TO ALLOW FOR A TIGHT CONNECTION BETWEEN RIGID BARRIER AND THRIE BEAM CONNECTION PLATE. CONTRACTOR IS TO FIELD VERIFY BOLT LENGTH AND THREAD LENGTH. ONE ROUND WASHER REQUIRED BETWEEN BOLT HEAD AND THRIE BEAM CONNECTOR PLATE. BOLTS THAT EXTEND THROUGH THE PARAPET AND OUT THE BACK FACE REQUIRE A HARDENED ROUND STEEL WASHER THAT IS 2" O.D. X 5/8" THICK AND ONE PLATE WASHER. REPAIR ANY DAMAGED CONCRETE FROM BOLT INSTALLATION.

③ THE RECESS FOR A W-BEAM CONNECTION, WHICH EXISTS ON SOME PARAPETS OF THIS TYPE, SHALL BE FILLED WITH A TREATED TIMBER BLOCKOUT. BLOCKOUT SIZE IS 1'-6" X 2'-0" X 3 1/2".

④ BOLT, NUT AND WASHERS NOT REQUIRED FOR THIS LOCATION WHEN RETROFITTING AN EXISTING PAPAPET AND THE HOLE IS EITHER ABOVE PARAPET OR WITHIN 4 INCHES OF THE EDGE OF PARAPET.

Ⓑ TOLERANCE FOR TOP OF BEAM IS ± 1".

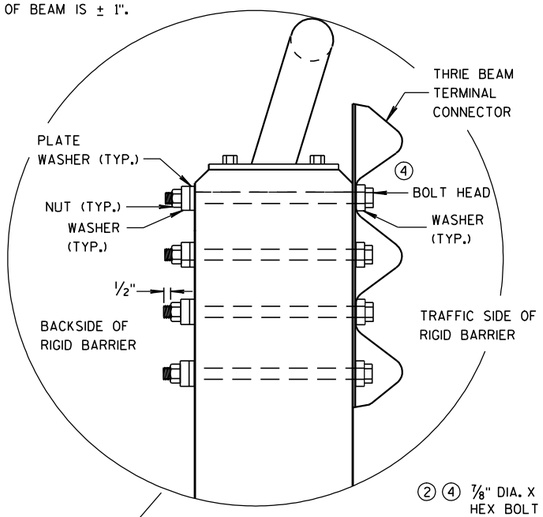

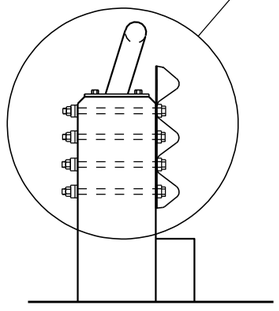

SECTION G-G

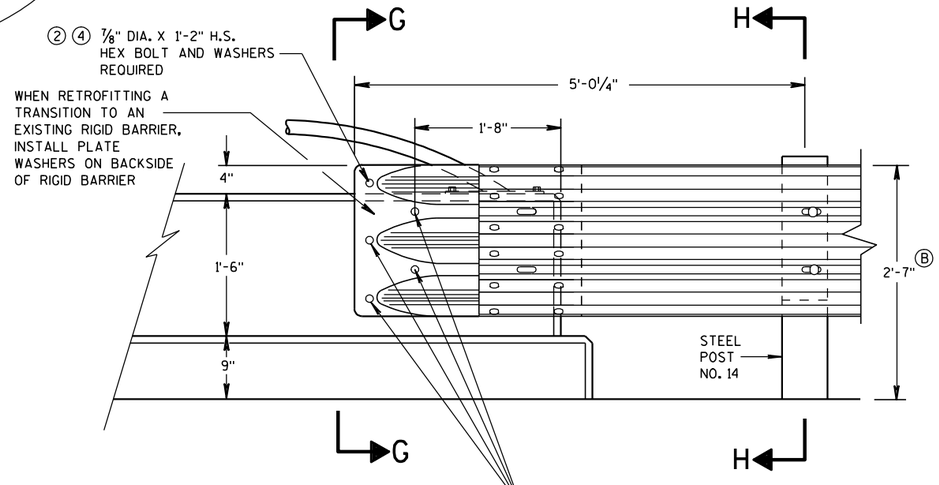

FRONT VIEW

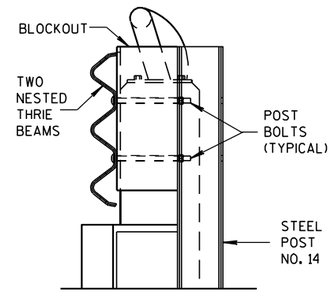

SECTION H-H

THRIE BEAM CONNECTION TO VERTICAL FACED PARAPETS

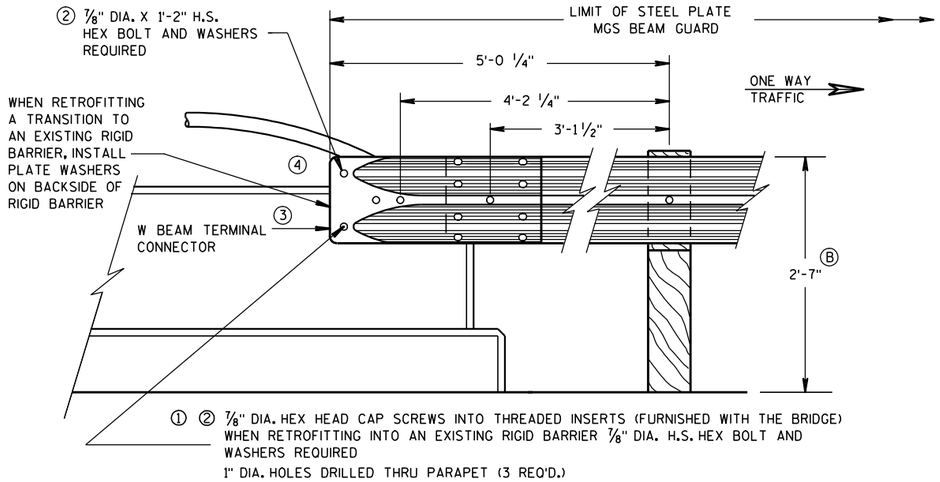

FRONT VIEW

W BEAM CONNECTION TO VERTICAL FACE PARAPET

(USE ONLY ON THE TRAFFIC EXIT END OF ONE WAY BRIDGES)

MIDWEST GUARDRAIL SYSTEM
THRIE BEAM TRANSITION (MGS)

STATE OF WISCONSIN
DEPARTMENT OF TRANSPORTATION

APPROVED

2-8-2012
DATE

/S/ Jerry H. [illegible]
ROADWAY STANDARDS [illegible] ENGINEER

FHWA

6

S.D.D. 14 B 45-2e

6

S.D.D. 14 B 45-2e

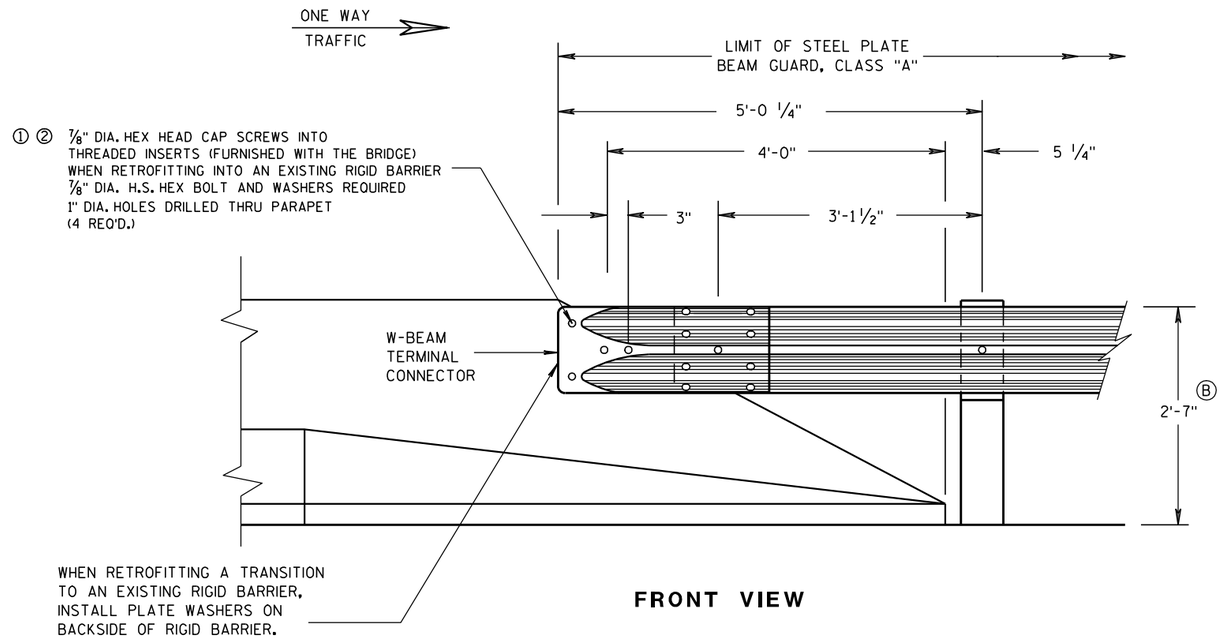

FRONT VIEW

W BEAM CONNECTION TO PARAPETS WITH SLOPED ENDS

(USE ONLY AT TRAFFIC EXIT END OF ONE WAY BRIDGE)

GENERAL NOTES

① INCLUDE THE PAYMENT FOR DRILLING BOLT HOLES THROUGH THE PARAPET, AND ALL BOLTS, NUTS AND WASHERS IN THE ITEM "STEEL THRIE BEAM STRUCTURAL APPROACH".

② BOLTS MAY BE A325 BOLTS OR A449 BOLTS. BOLT LENGTH AND THREADING LENGTH ARE TO ALLOW FOR A TIGHT CONNECTION BETWEEN RIGID BARRIER AND THRIE BEAM CONNECTION PLATE. CONTRACTOR IS TO FIELD VERIFY BOLT LENGTH AND THREAD LENGTH. ONE ROUND WASHER REQUIRED BETWEEN BOLT HEAD AND THRIE BEAM CONNECTOR PLATE. BOLTS THAT EXTEND THROUGH THE PARAPET AND OUT THE BACK FACE REQUIRE A HARDENED ROUND STEEL WASHER THAT IS 2" O.D. X 5/8" THICK AND ONE PLATE WASHER. REPAIR ANY DAMAGED CONCRETE FROM BOLT INSTALLATION.

Ⓑ TOLERANCE FOR TOP OF BEAM IS ± 1".

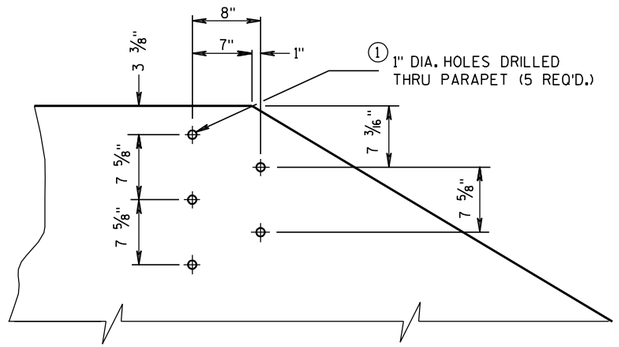

DRILL HOLE LOCATION AND PATTERN FOR THRIE BEAM CONNECTION

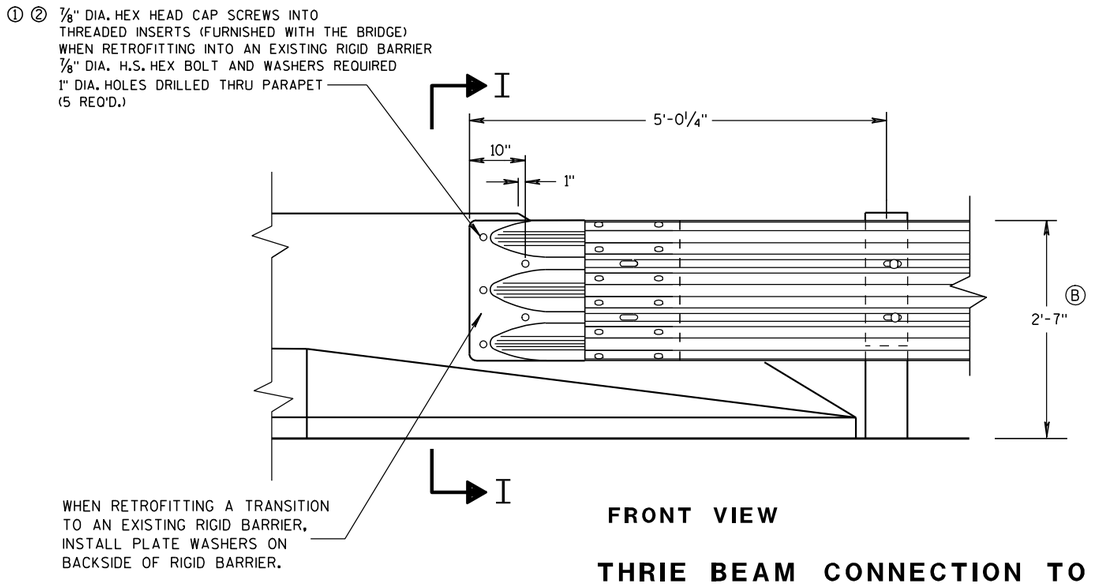

FRONT VIEW

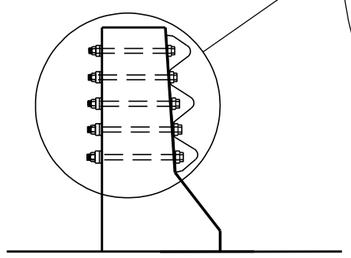

SECTION I-I

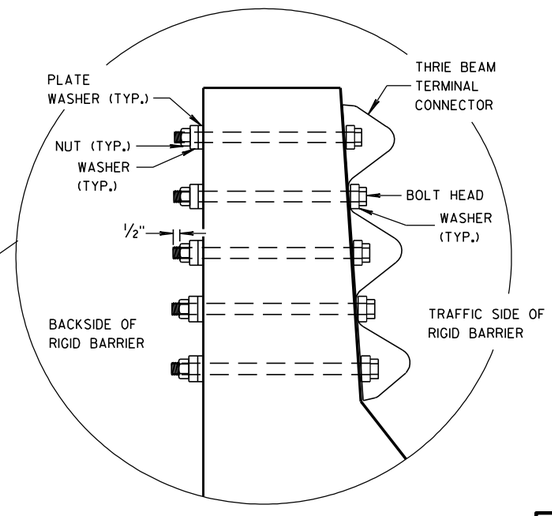

THRIE BEAM CONNECTION TO BRIDGE PARAPETS WITH SLOPED ENDS

MIDWEST GUARDRAIL SYSTEM
THRIE BEAM TRANSITION (MGS)

STATE OF WISCONSIN
DEPARTMENT OF TRANSPORTATION

APPROVED

2-8-2012 — DATE

/S/ Jerry H. Zogg — ROADWAY STANDARDS ENGINEER

FHWA

6

S.D.D. 14 B 45-2f

6

S.D.D. 14 B 45-2f

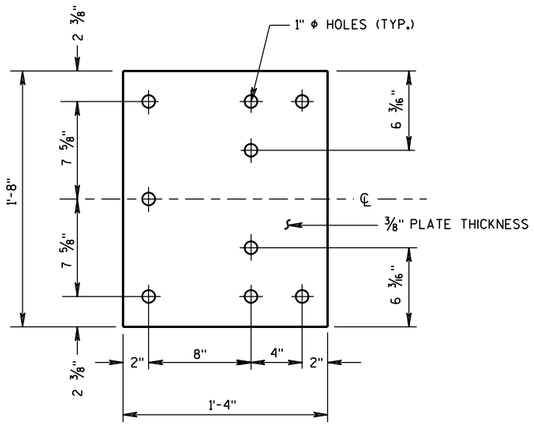

BACK-UP PLATE DETAIL

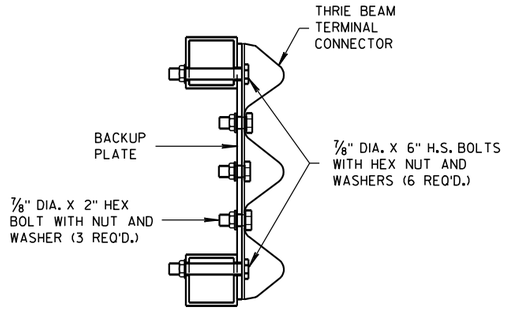

SECTION J-J

GENERAL NOTES

(1) INCLUDE THE PAYMENT FOR DRILLING HOLES IN RAILING IN THE ITEM "STEEL THRIE BEAM STRUCTURE APPROACH".

(B) TOLERANCE FOR TOP OF BEAM IS ± 1".

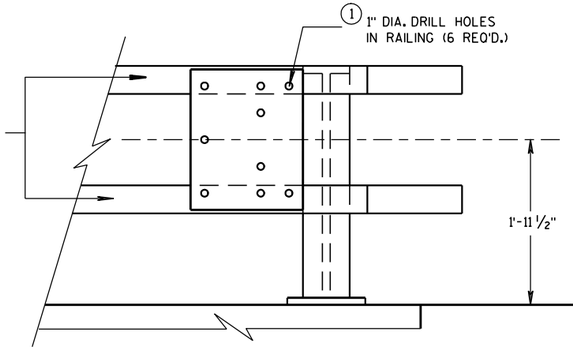

BACK-UP PLATE MOUNTING ONTO BRIDGE RAILING

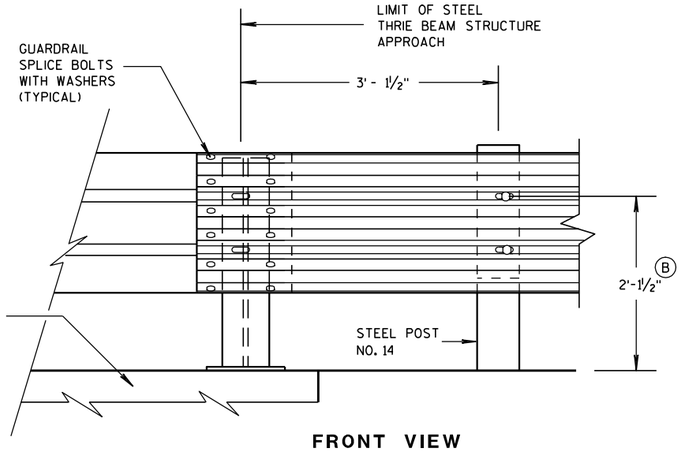

FRONT VIEW

THRIE BEAM CONNECTION TO STEEL RAILING TYPE "W"

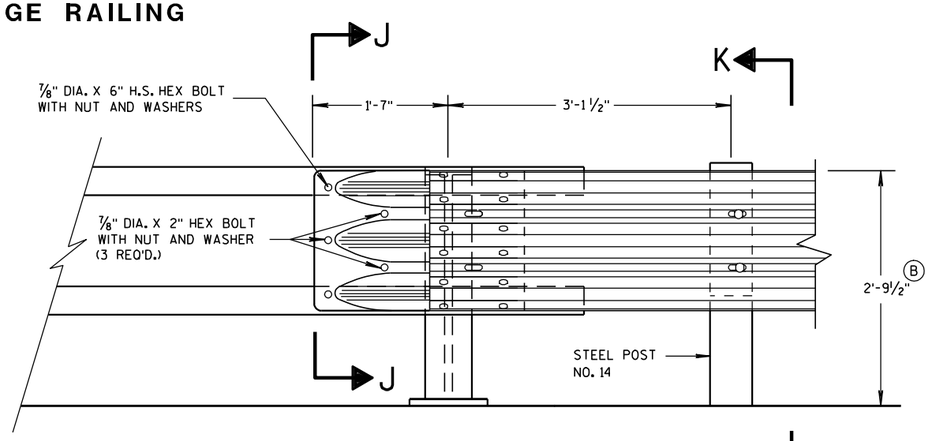

FRONT VIEW

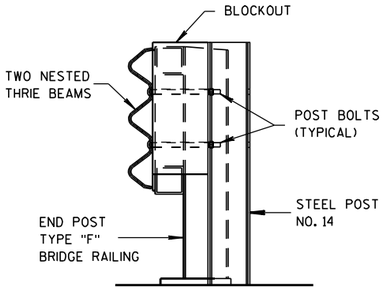

SECTION K-K

THRIE BEAM CONNECTION TO TUBULAR RAILING TYPE "F"

MIDWEST GUARDRAIL SYSTEM
THRIE BEAM TRANSITION (MGS)

STATE OF WISCONSIN
DEPARTMENT OF TRANSPORTATION

APPROVED
2-8-2012 DATE
/S/ Jerry H. [illegible]
ROADWAY STANDARDS [illegible] ENGINEER
FHWA

6

S.D.D. 14 B 45-2g

6

S.D.D. 14 B 45-2g

GENERAL NOTES

(B) TOLERANCE FOR TOP OF W-BEAM RAIL IS ± 1".

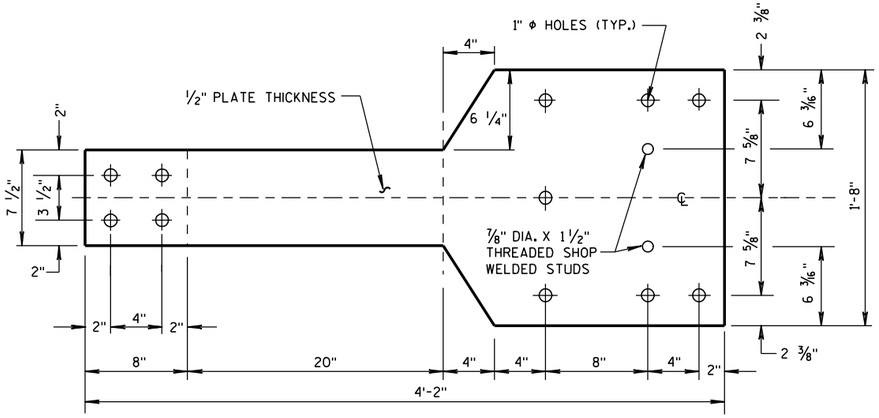

FRONT VIEW

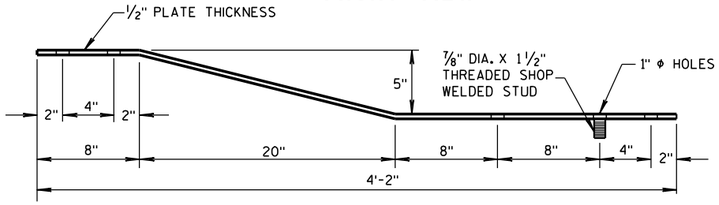

PLAN VIEW

BACK-UP PLATE DETAIL, TYPE "M"

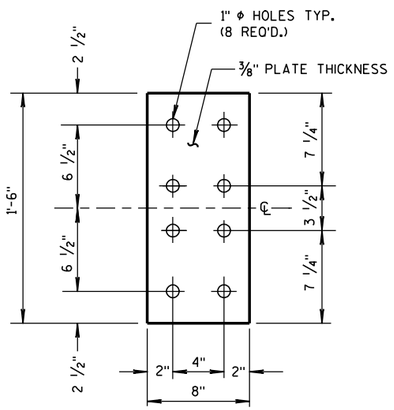

FRONT VIEW

ANCHOR PLATE DETAIL, TYPE "M"

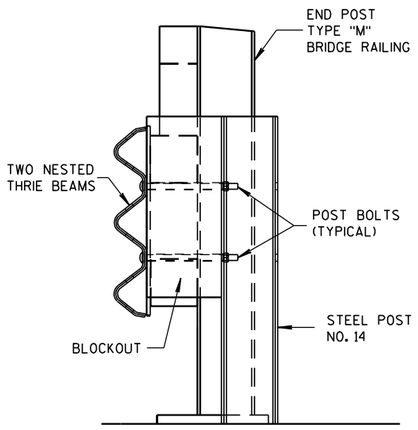

SECTION M-M

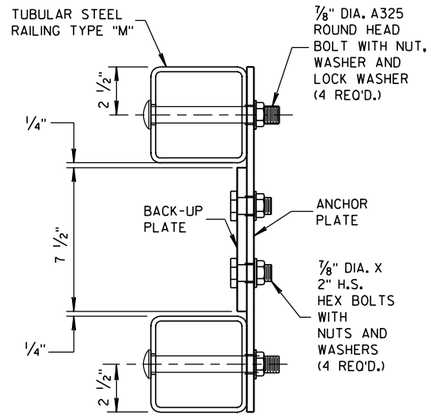

SECTION L-L

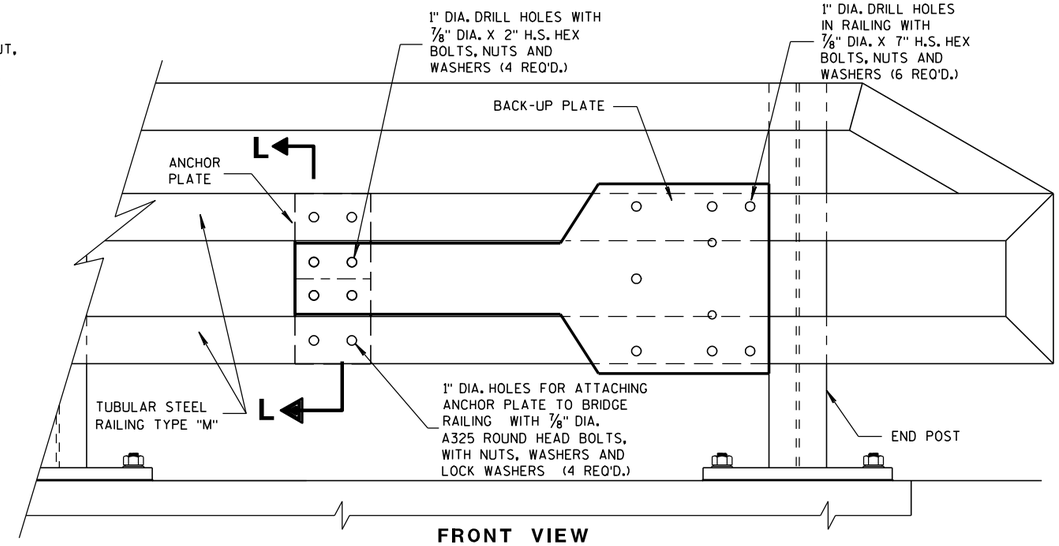

FRONT VIEW

ANCHOR AND BACK-UP PLATE MOUNTING TO BRIDGE RAILING, TYPE "M"

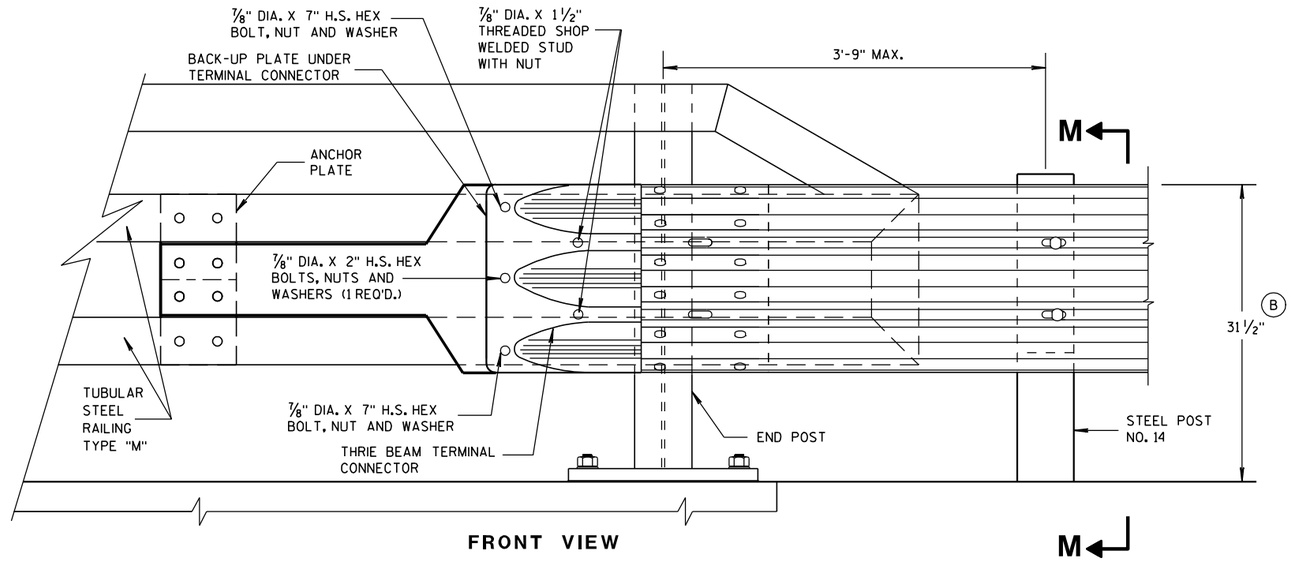

FRONT VIEW

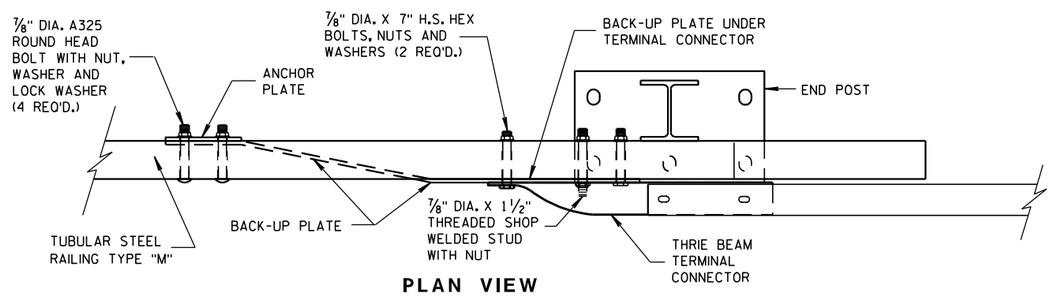

PLAN VIEW

THRIE BEAM CONNECTION TO TUBULAR RAILING, TYPE "M"

MIDWEST GUARDRAIL SYSTEM
THRIE BEAM TRANSITION (MGS)

STATE OF WISCONSIN
DEPARTMENT OF TRANSPORTATION

APPROVED

2-8-2012 DATE

/S/ Jerry H. [illegible]
ROADWAY STANDARDS ENGINEER

FHWA

6

S.D.D. 14 B 45-2h

6

S.D.D. 14 B 45-2h

GENERAL NOTES

COVER PLATE PANELS ARE 3/16" THICK.

ALL STIFFENERS ARE 1/4" THICK.

CONNECTOR PLATE SHALL BE FABRICATED FROM ASTM GRADE A36 STEEL AND GALVANIZED.

FOR GALVANIZED REQUIREMENTS, SEE SECTION 614 OF THE STANDARD SPECIFICATIONS.

ALL HOLE DIAMETERS SHALL BE 1".

FOR OPPOSITE SIDE INSTALLATION MIRROR DRAWINGS.

(1) STIFFENERS LOCATED AT THE OUTSIDE EDGES OF THE COVER PLATES SHALL BE WELDED AS FOLLOWS:
SINGLE BEVEL GROOVE WELD ON EXTERNAL SIDES AND 3/16" FILLET WELD BY 1" LONG SPACED AT 2" ON INTERNAL SIDES.

(2) STIFFENERS LOCATED ON THE INSIDE OF THE COVER PLATE SHALL BE WELDED AS FOLLOWS:
3/16" FILLET WELD BY 1" LONG SPACED AT 2".

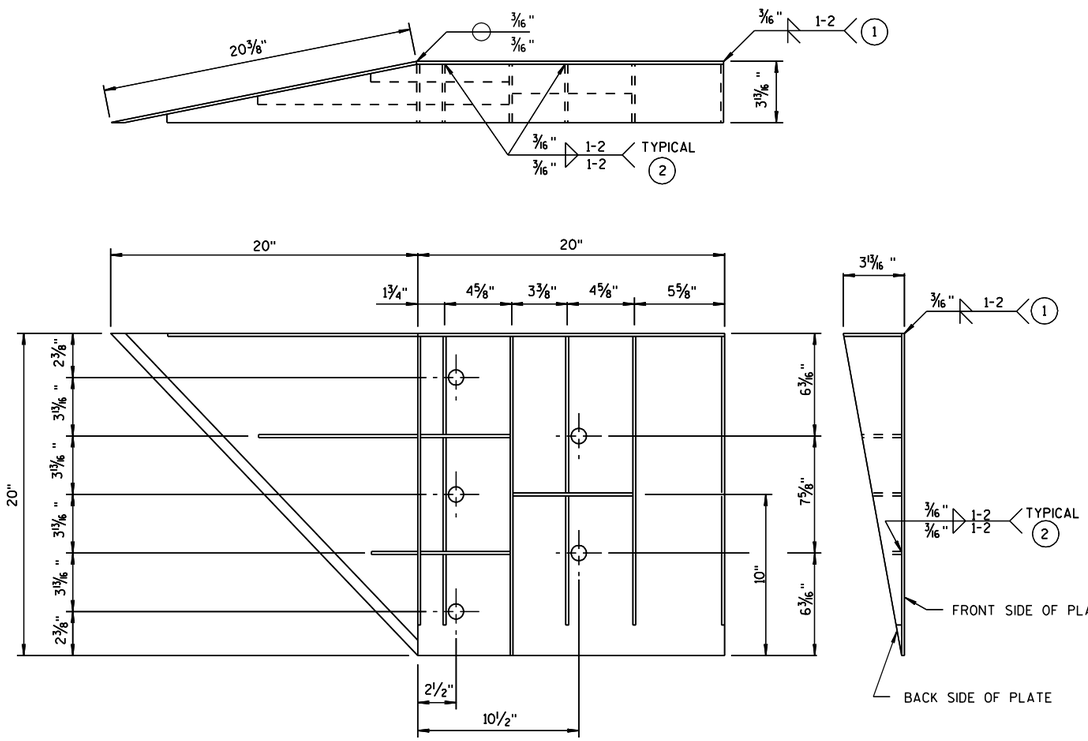

WELDING INSTRUCTION

(VIEWED FROM BACK SIDE OF PLATE)

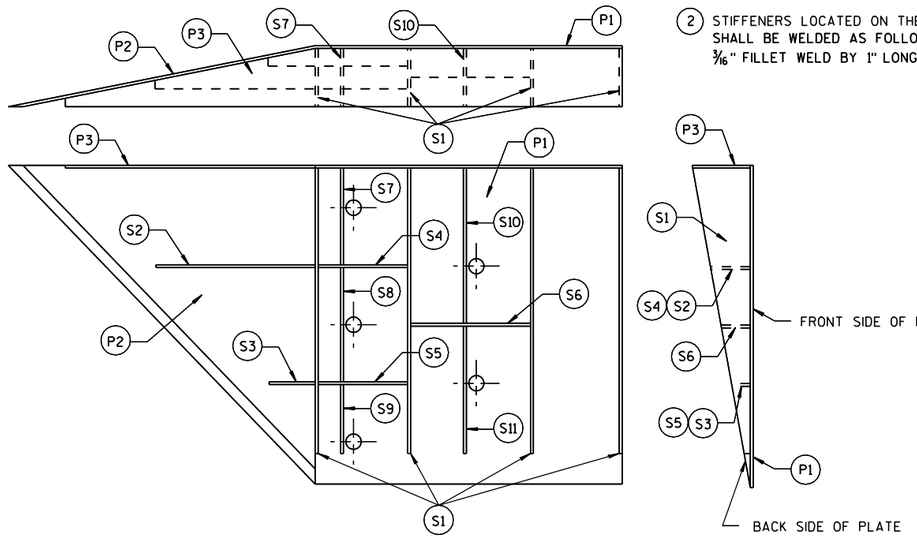

PLATE AND STIFFENER IDENTIFICATION

(VIEWED FROM BACK SIDE OF PLATE)

CONNECTOR PLATE DIMENSION (PER ASSEMBLY)				
PLATE	QUANTITY	SHAPE	SIZE (A x B x C x D)	THICKNESS
P1	1	B A	20" x 20"	3/16"
P2	1	B A C	20" x 20" x 28 9/16"	3/16"
P3	1	B A C D	39" x 3 5/8" x 20" x 19 5/16"	3/16"
S1	4	B A C	18 7/16" x 3 5/8" x 18 3/4"	1/4"
S2	1	B A C D	10 1/4" x 2 7/16" x 10 3/8" x 1/2"	1/4"
S3	1	B A C D	3" x 1 1/16" x 3 1/8" x 1/2"	1/4"
S4	1	B A	6 1/8" x 2 7/16"	1/4"
S5	1	B A	6 1/8" x 1 1/16"	1/4"
S6	1	B A	7 3/4" x 1 3/4"	1/4"
S7	1	A D B C	2 9/16" x 6" x 3 5/8" x 5 7/8"	1/4"
S8	1	A D B C	1 5/32" x 7 1/2" x 2 1/2" x 7 3/8"	1/4"
S9	1	C A B	6 1/16" x 6 3/16" x 1 3/32"	1/4"
S10	1	A D B C	1 7/8" x 9 7/8" x 3 5/8" x 9 11/16"	1/4"
S11	1	C A B	8 1/2" x 8 3/4" x 1 13/16"	1/4"

SINGLE SLOPE CONNECTION PLATE

MIDWEST GUARDRAIL SYSTEM
THRIE BEAM TRANSITION (MGS)

STATE OF WISCONSIN
DEPARTMENT OF TRANSPORTATION

APPROVED
2-8-2012 /S/ Jerry H. Zogg
DATE ROADWAY STANDARDS DEVELOPMENT ENGINEER
FHWA

6

S.D.D. 14 B 45-2i

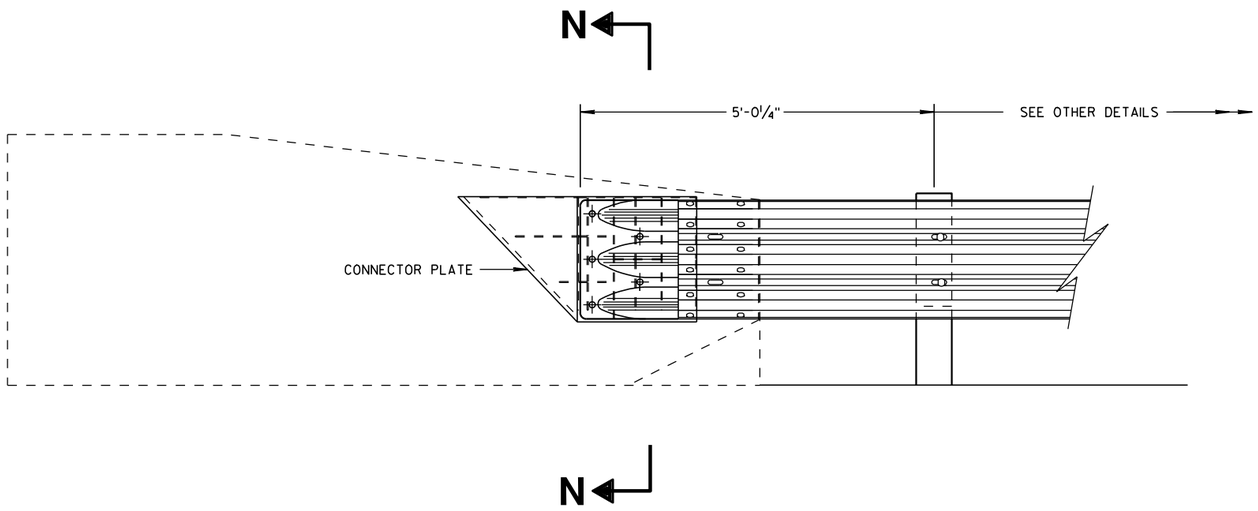

THRIE BEAM CONNECTION TO SINGLE SLOPE BARRIER

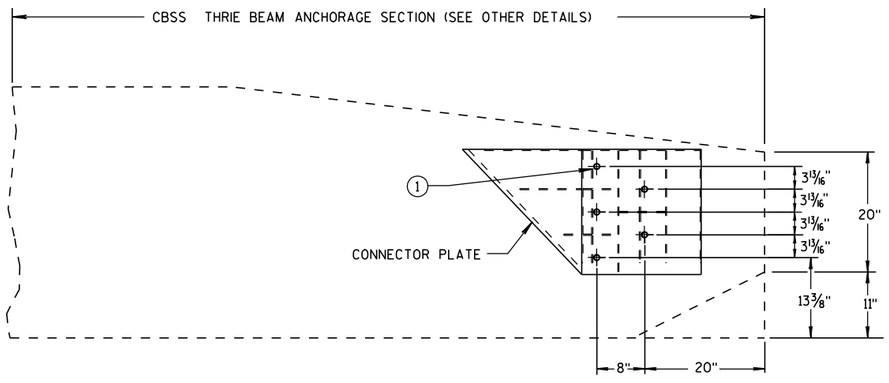

SINGLE SLOPE CONNECTION PLATE PLACEMENT

GENERAL NOTES

CONNECTION PLATE INCIDENTAL TO STEEL THRIE BEAM TRANSITION.

(1) BOLTS MAY BE A325 BOLTS OR A449 BOLTS. BOLT LENGTH AND THREADING LENGTH ARE TO ALLOW FOR A TIGHT CONNECTION BETWEEN RIGID BARRIER AND THRIE BEAM CONNECTION PLATE. CONTRACTOR IS TO FIELD VERIFY BOLT LENGTH AND THREAD LENGTH. ONE ROUND WASHER REQUIRED BETWEEN BOLT HEAD AND THRIE BEAM CONNECTOR PLATE. BOLTS THAT EXTEND THROUGH THE PARAPET AND OUT THE BACK FACE REQUIRE A HARDENED ROUND STEEL WASHER THAT IS 2" O.D. X 5/8" THICK AND ONE PLATE WASHER. REPAIR ANY DAMAGED CONCRETE FROM BOLT INSTALLATION.

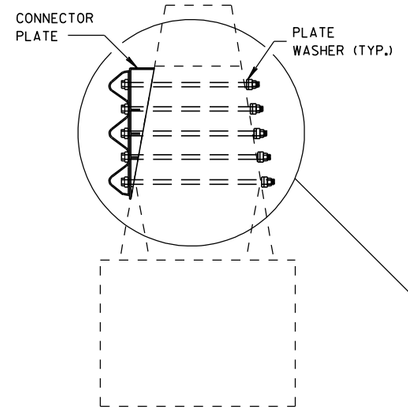

SECTION N-N

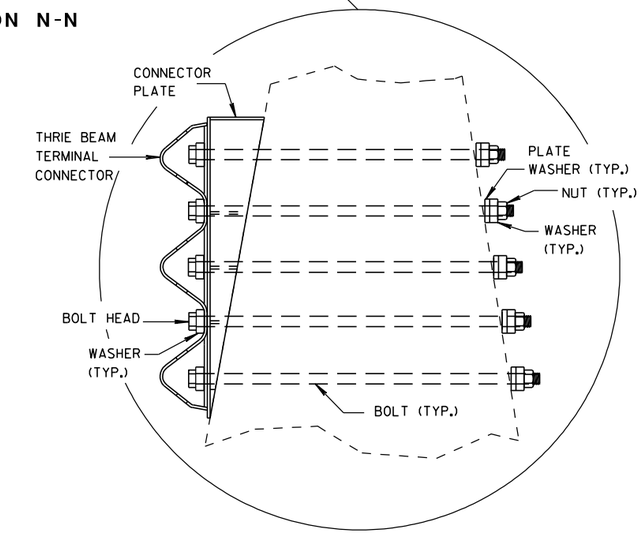

MIDWEST GUARDRAIL SYSTEM
THRIE BEAM TRANSITION (MGS)

STATE OF WISCONSIN
DEPARTMENT OF TRANSPORTATION

APPROVED

2-8-2012
DATE

/S/ Jerry H. [illegible]
ROADWAY STANDARDS DEVELOPMENT ENGINEER

FHWA

6

S.D.D. 14 B 45-2j

6

S.D.D. 14 B 45-2j

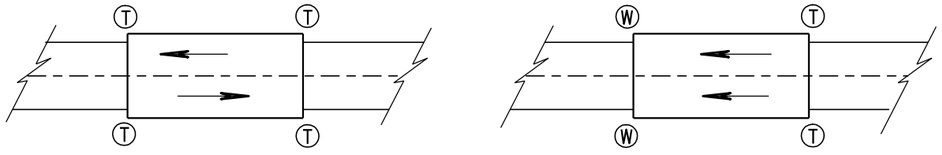

TWO WAY TRAFFIC

ONE WAY TRAFFIC

Ⓣ THRIE BEAM CONNECTION

Ⓦ W-BEAM CONNECTION WHEN REQUIRED

TYPICAL LOCATIONS OF THRIE BEAM AND W-BEAM CONNECTIONS TO BRIDGE

GENERAL NOTES

BOLT THE THRIE BEAM TO ALL POSTS AND BLOCKOUTS. DRILL OR PUNCH BOLT HOLES IN THE BEAM IF THE POST SPACING IS LESS THAN 6'-3.

IF ROCK IS ENCOUNTERED, REMOVE ROCK TO FULL DEPTH OF POST PLUS 2½", AND 12" DIAMETER AROUND POST. SEE 14B42 FOR MORE DETAILS.

TRANSITION USES STEEL POSTS ONLY.

SEE STANDARD DETAIL DRAWING 14 B 42 FOR MORE INFORMATION.

Ⓐ BRIDGE RAILING TYPE "W" DOES NOT REQUIRE A TERMINAL CONNECTOR.

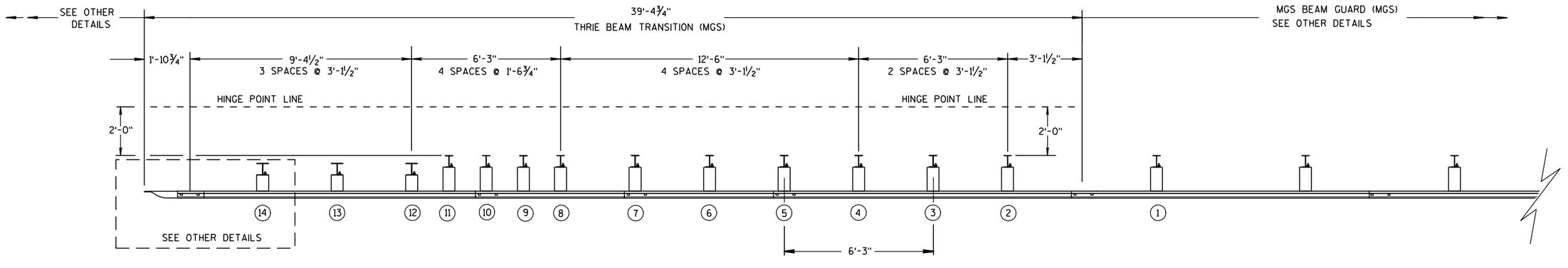

PLAN VIEW

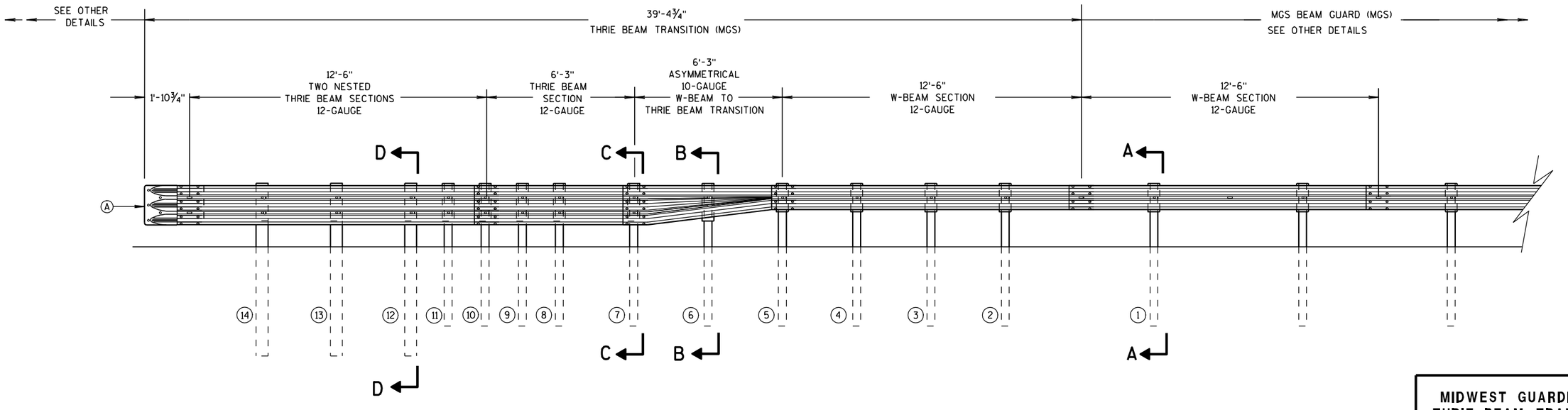

ELEVATION VIEW

MIDWEST GUARDRAIL SYSTEM THRIE BEAM TRANSITION

MIDWEST GUARDRAIL SYSTEM
THRIE BEAM TRANSITION (MGS)

STATE OF WISCONSIN
DEPARTMENT OF TRANSPORTATION

6
S.D.D. 14 B 45-3a

GENERAL NOTES

(B) TOLERANCE FOR TOP OF W-BEAM RAIL IS ± 1".

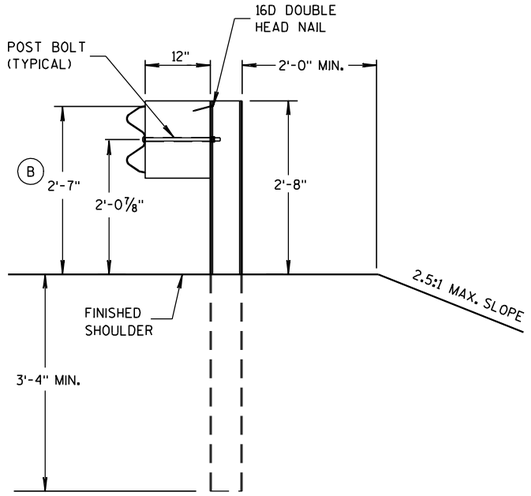

SECTION A-A

POSTS 1-5

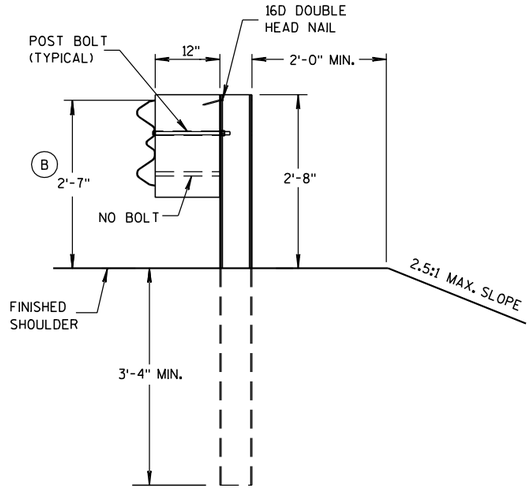

SECTION B-B

POST 6

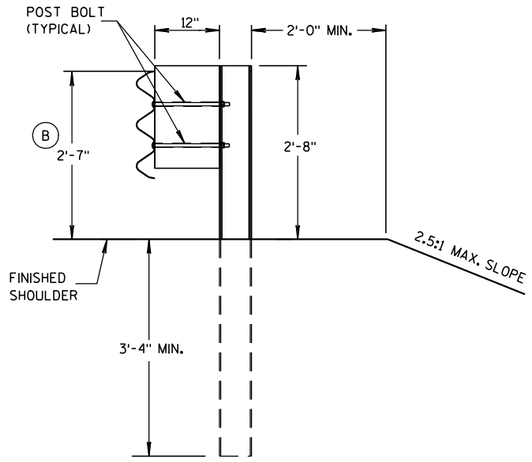

SECTION C-C

POSTS 7-11

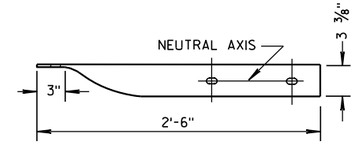

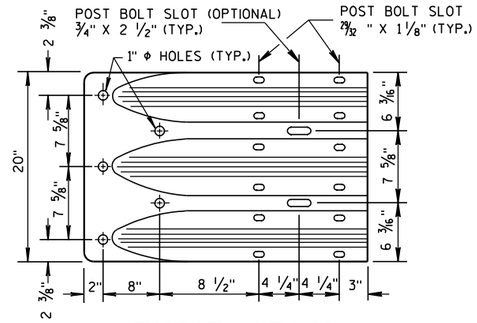

THRIE BEAM TERMINAL CONNECTOR

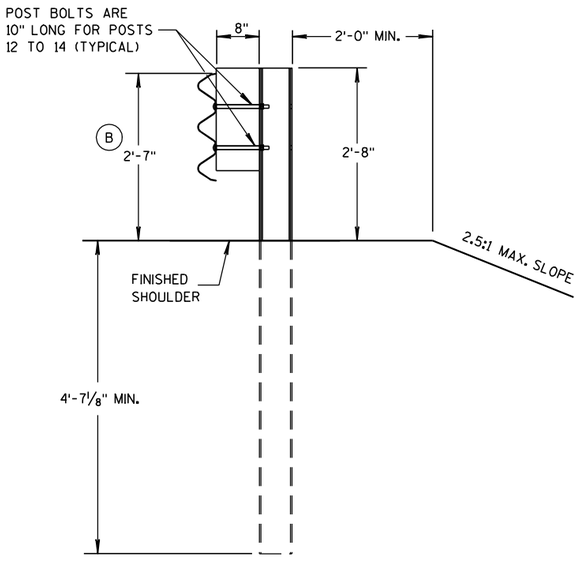

SECTION D-D

POSTS 12-14

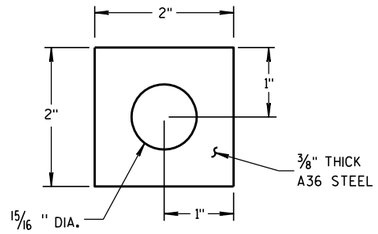

PLATE WASHER DETAIL

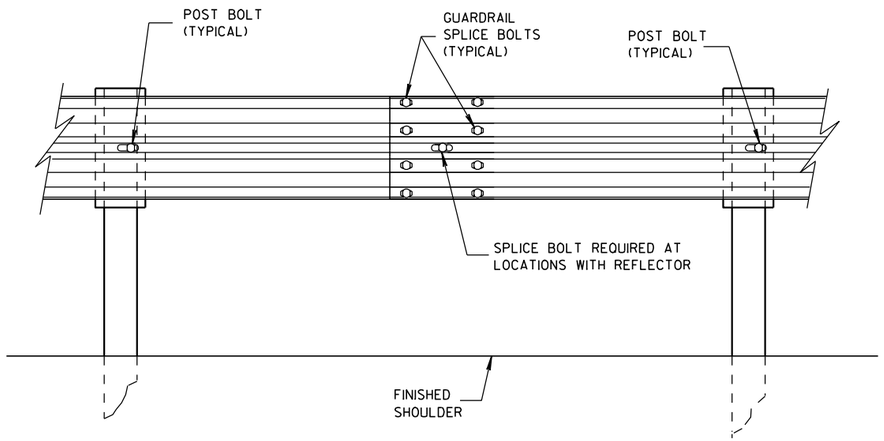

SPLICE DETAIL

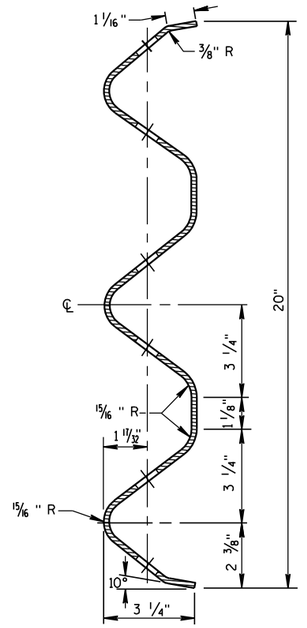

SECTION THRU THRIE BEAM RAIL ELEMENT

MIDWEST GUARDRAIL SYSTEM
THRIE BEAM TRANSITION (MGS)

STATE OF WISCONSIN
DEPARTMENT OF TRANSPORTATION

6

S.D.D. 14 B 45-3b

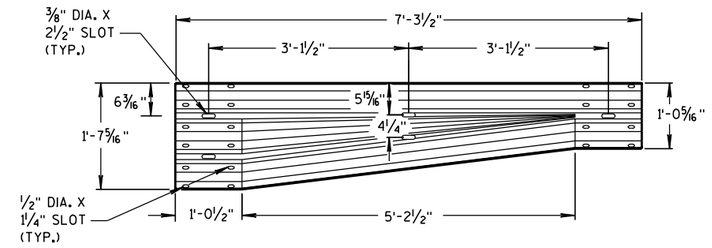

W-BEAM TO THRIE BEAM TRANSITION SECTION

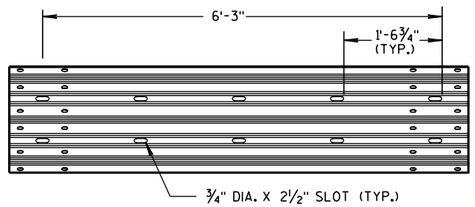

6'-3" THRIE BEAM SECTION

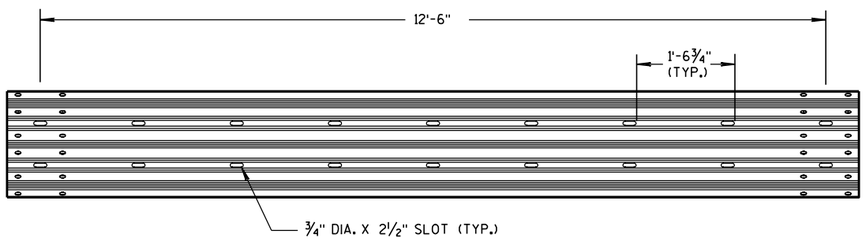

12'-6" THRIE BEAM SECTION

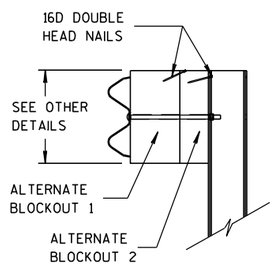

SIDE VIEW

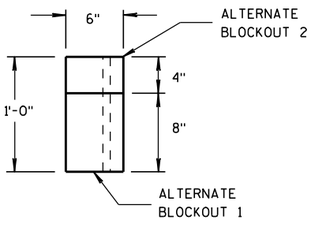

TOP VIEW

ALTERNATE WOOD BLOCKOUT DETAIL

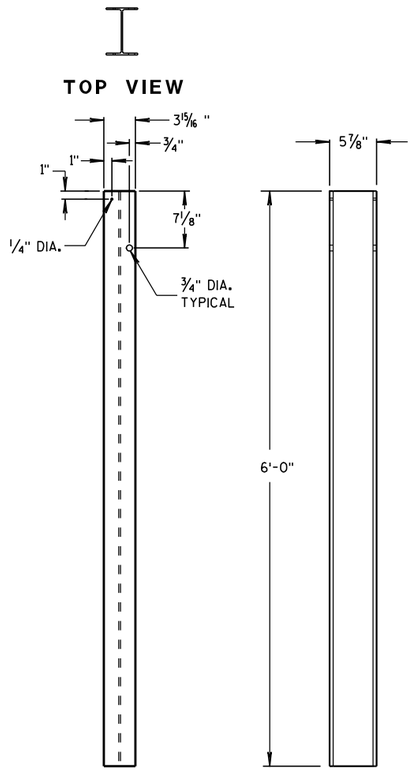

STEEL POSTS 1-5

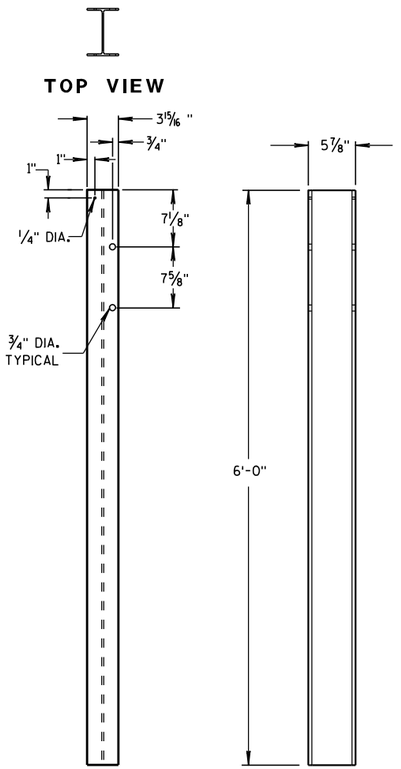

STEEL POSTS 6-11

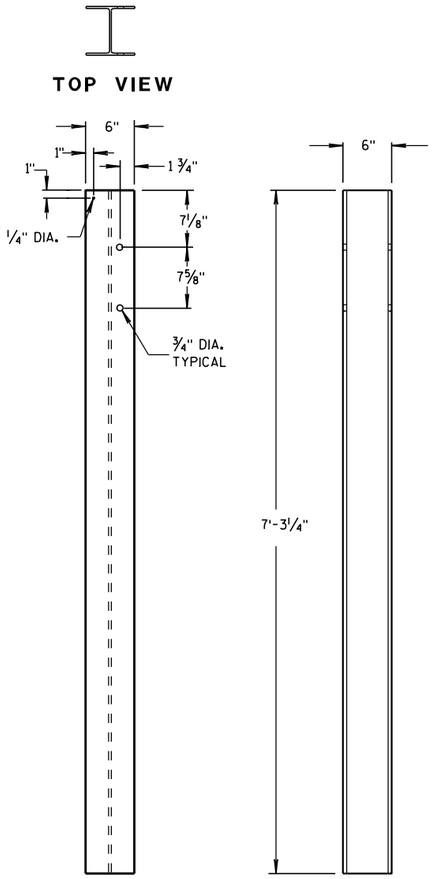

STEEL POSTS 12-14

(1) WOOD BLOCKS MAY BE CONSTRUCTED OUT OF 2 WOOD BLOCKS. SEE ALTERNATE WOOD BLOCK DETAIL.

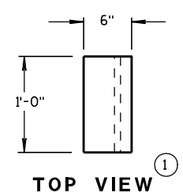

TOP VIEW (1)

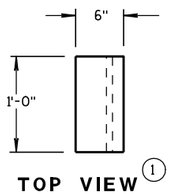

TOP VIEW (1)

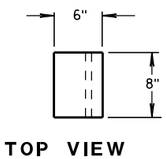

TOP VIEW

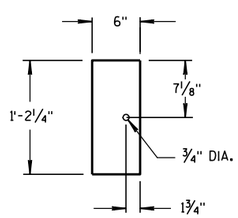

FRONT VIEW

BLOCKOUT POSTS 1-5

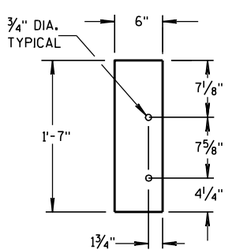

FRONT VIEW

BLOCKOUT POSTS 6-11

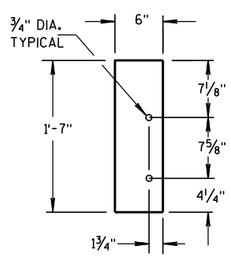

FRONT VIEW

BLOCKOUT POSTS 12-14

STEEL POST SIZES

POST NUMBER	SECTION TYPE	LENGTH
1	W6x9	72"
2	W6x9	72"
3	W6x9	72"
4	W6x9	72"
5	W6x9	72"
6	W6x9	72"
7	W6x9	72"
8	W6x9	72"
9	W6x9	72"
10	W6x9	72"
11	W6x9	72"
12	W6x15	87 1/8"
13	W6x15	87 1/8"
14	W6x15	87 1/8"

MIDWEST GUARDRAIL SYSTEM
THRIE BEAM TRANSITION (MGS)

STATE OF WISCONSIN
DEPARTMENT OF TRANSPORTATION

6

S.D.D. 14 B 45-3c

6

S.D.D. 14 B 45-3c

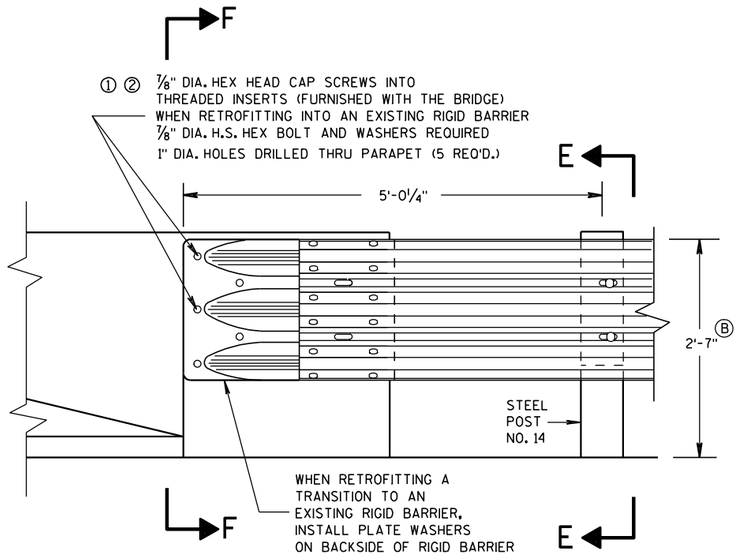

FRONT VIEW

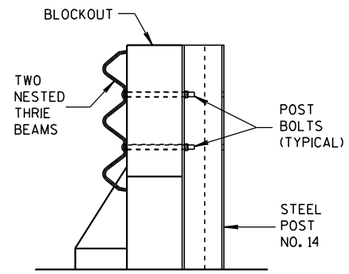

SECTION E-E

THRIE BEAM CONNECTION TO BRIDGE PARAPET WITH SQUARE ENDS

GENERAL NOTES

THESE ARE TYPICAL CONNECTION DETAILS. ADJUST THE POSTION OF CONNECTIONS TO EXISTING BRIDGES TO FIT THE ACTUAL BRIDGE AND SITE DIMENSIONS.

① DRILLING BOLT HOLES THROUGH THE PARAPET, BOLTS, NUTS, WASHERS AND REPAIRING DAMAGED CONCRETE ARE INCIDENTAL TO THE CONTRACT.

② BOLTS MAY BE A325 BOLTS OR A449 BOLTS. BOLT LENGTH AND THREADING LENGTH ARE TO ALLOW FOR A TIGHT CONNECTION BETWEEN RIGID BARRIER AND THRIE BEAM CONNECTION PLATE. CONTRACTOR IS TO FIELD VERIFY BOLT LENGTH AND THREAD LENGTH. ONE ROUND WASHER REQUIRED BETWEEN BOLT HEAD AND THRIE BEAM CONNECTOR PLATE. BOLTS THAT EXTEND THROUGH THE PARAPET AND OUT THE BACK FACE REQUIRE A HARDENED ROUND STEEL WASHER THAT IS 2" O.D. X 5/8" THICK AND ONE PLATE WASHER. REPAIR ANY DAMAGED CONCRETE FROM BOLT INSTALLATION.

③ THE RECESS FOR A W-BEAM CONNECTION, WHICH EXISTS ON SOME PARAPETS OF THIS TYPE, SHALL BE FILLED WITH A TREATED TIMBER BLOCKOUT. BLOCKOUT SIZE IS 1'-6" X 2'-0" X 3 1/2".

Ⓑ TOLERANCE FOR TOP OF BEAM IS ± 1".

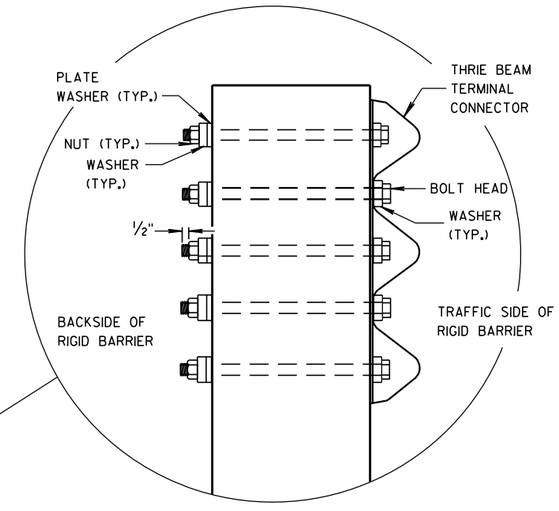

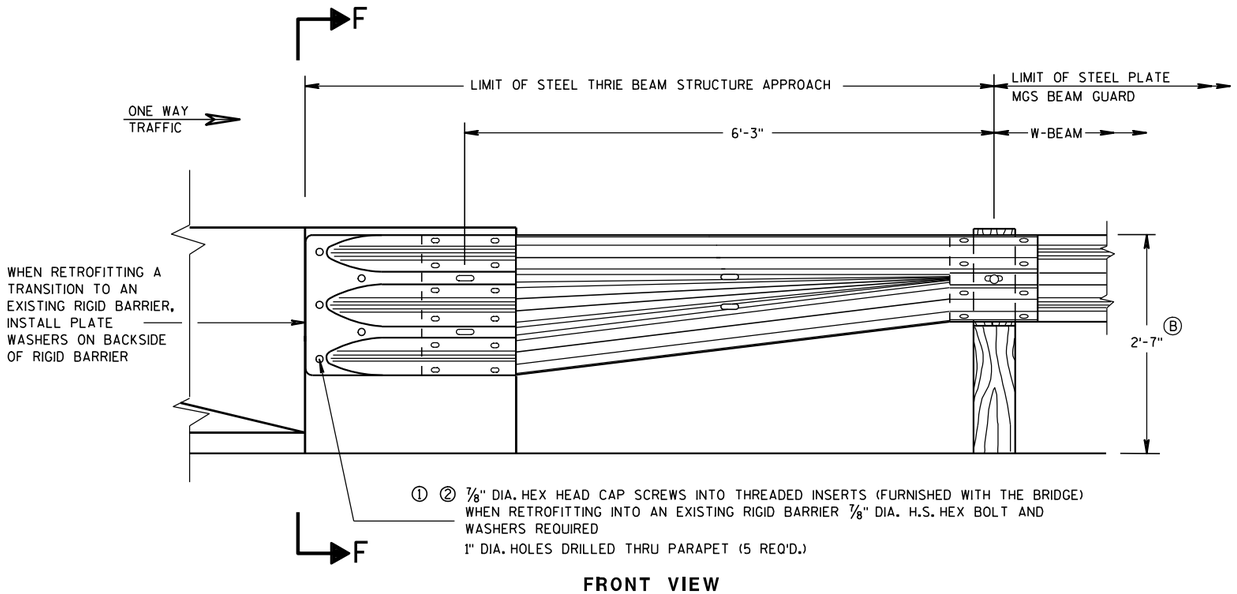

FRONT VIEW

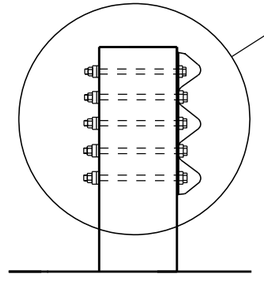

SECTION F-F

W BEAM TRANSITION AND CONNECTION TO BRIDGE PARAPETS WITH SQUARE ENDS

(USE ONLY ON THE TRAFFIC EXIT END OF ONE WAY BRIDGES)

MIDWEST GUARDRAIL SYSTEM
THRIE BEAM TRANSITION (MGS)

STATE OF WISCONSIN
DEPARTMENT OF TRANSPORTATION

APPROVED

8/31/2012 — DATE

/S/ Jerry H. [illegible] — ROADWAY STANDARDS DEVELOPMENT ENGINEER

FHWA

6

S.D.D. 14 B 45-3d

6

S.D.D. 14 B 45-3d

GENERAL NOTES

THESE ARE TYPICAL CONNECTION DETAILS. ADJUST THE POSTION OF CONNECTIONS TO EXISTING BRIDGES TO FIT THE ACTUAL BRIDGE AND SITE DIMENSIONS.

① DRILLING BOLT HOLES THROUGH THE PARAPET, BOLTS, NUTS, WASHERS AND REPAIRING DAMAGED CONCRETE ARE INCIDENTAL TO THE CONTRACT.

② BOLTS MAY BE A325 BOLTS OR A449 BOLTS. BOLT LENGTH AND THREADING LENGTH ARE TO ALLOW FOR A TIGHT CONNECTION BETWEEN RIGID BARRIER AND THRIE BEAM CONNECTION PLATE. CONTRACTOR IS TO FIELD VERIFY BOLT LENGTH AND THREAD LENGTH. ONE ROUND WASHER REQUIRED BETWEEN BOLT HEAD AND THRIE BEAM CONNECTOR PLATE. BOLTS THAT EXTEND THROUGH THE PARAPET AND OUT THE BACK FACE REQUIRE A HARDENED ROUND STEEL WASHER THAT IS 2" O.D. X 5/8" THICK AND ONE PLATE WASHER. REPAIR ANY DAMAGED CONCRETE FROM BOLT INSTALLATION.

③ THE RECESS FOR A W-BEAM CONNECTION, WHICH EXISTS ON SOME PARAPETS OF THIS TYPE, SHALL BE FILLED WITH A TREATED TIMBER BLOCKOUT. BLOCKOUT SIZE IS 1'-6" X 2'-0" X 3 1/2". BLOCK IS INCIDENTAL TO THE CONTRACT.

④ BOLT, NUT AND WASHERS NOT REQUIRED FOR THIS LOCATION WHEN RETROFITTING AN EXISTING PAPAPET AND THE HOLE IS EITHER ABOVE PARAPET OR WITHIN 4 INCHES OF THE EDGE OF PARAPET.

Ⓑ TOLERANCE FOR TOP OF BEAM IS ± 1".

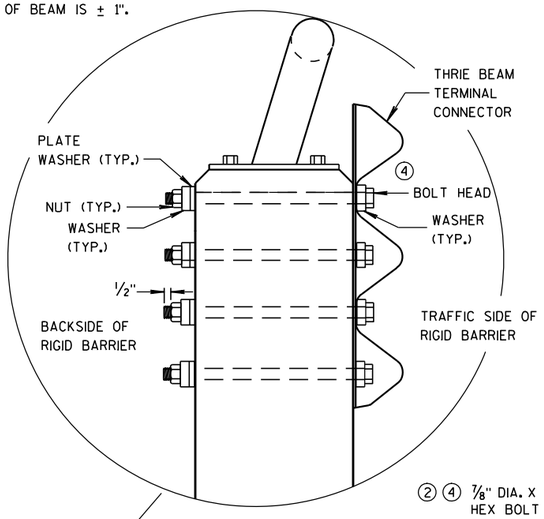

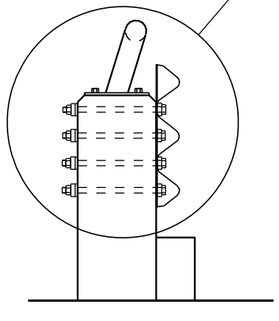

SECTION G-G

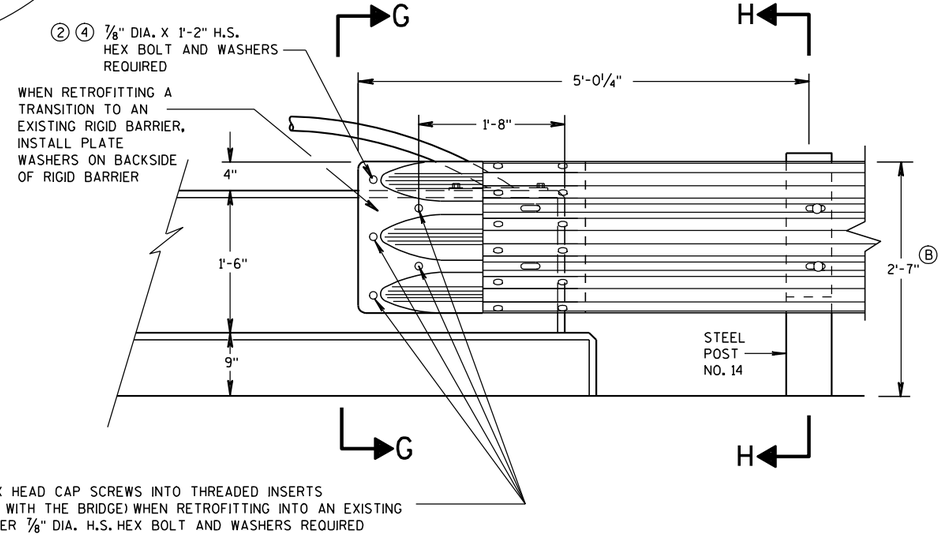

FRONT VIEW

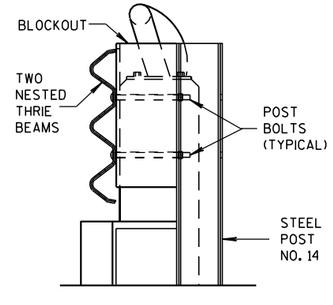

SECTION H-H

THRIE BEAM CONNECTION TO VERTICAL FACED PARAPETS

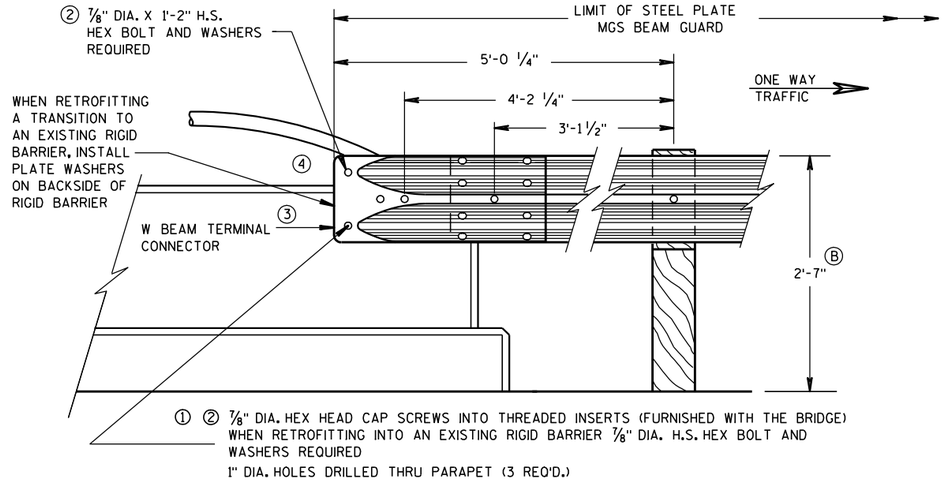

FRONT VIEW

W BEAM CONNECTION TO VERTICAL FACE PARAPET

(USE ONLY ON THE TRAFFIC EXIT END OF ONE WAY BRIDGES)

MIDWEST GUARDRAIL SYSTEM THRIE BEAM TRANSITION (MGS)	
STATE OF WISCONSIN DEPARTMENT OF TRANSPORTATION	
APPROVED	
8-31-2012 DATE	/S/ Jerry H. Zogg ROADWAY STANDARDS DEVELOPMENT ENGINEER
FHWA	

6

S.D.D. 14 B 45-3e

6

S.D.D. 14 B 45-3e

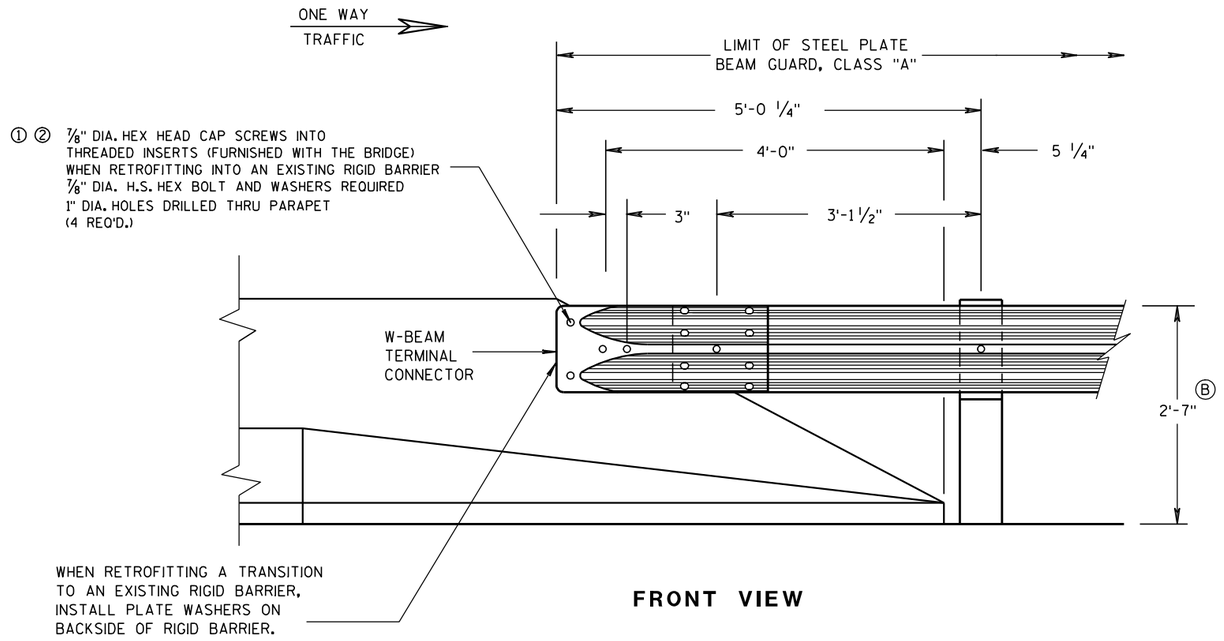

FRONT VIEW

W BEAM CONNECTION TO PARAPETS WITH SLOPED ENDS

(USE ONLY AT TRAFFIC EXIT END OF ONE WAY BRIDGE)

GENERAL NOTES

① DRILLING BOLT HOLES THROUGH THE PARAPET, BOLTS, NUTS, WASHERS AND REPAIRING DAMAGED CONCRETE ARE INCIDENTAL TO THE CONTRACT.

② BOLTS MAY BE A325 BOLTS OR A449 BOLTS. BOLT LENGTH AND THREADING LENGTH ARE TO ALLOW FOR A TIGHT CONNECTION BETWEEN RIGID BARRIER AND THRIE BEAM CONNECTION PLATE. CONTRACTOR IS TO FIELD VERIFY BOLT LENGTH AND THREAD LENGTH. ONE ROUND WASHER REQUIRED BETWEEN BOLT HEAD AND THRIE BEAM CONNECTOR PLATE. BOLTS THAT EXTEND THROUGH THE PARAPET AND OUT THE BACK FACE REQUIRE A HARDENED ROUND STEEL WASHER THAT IS 2" O.D. X 5/8" THICK AND ONE PLATE WASHER. REPAIR ANY DAMAGED CONCRETE FROM BOLT INSTALLATION.

Ⓑ TOLERANCE FOR TOP OF BEAM IS ± 1".

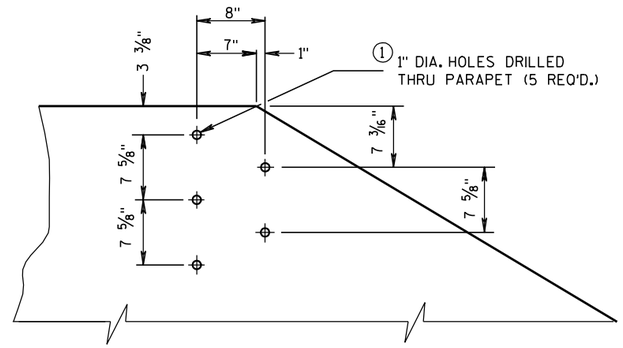

DRILL HOLE LOCATION AND PATTERN FOR THRIE BEAM CONNECTION

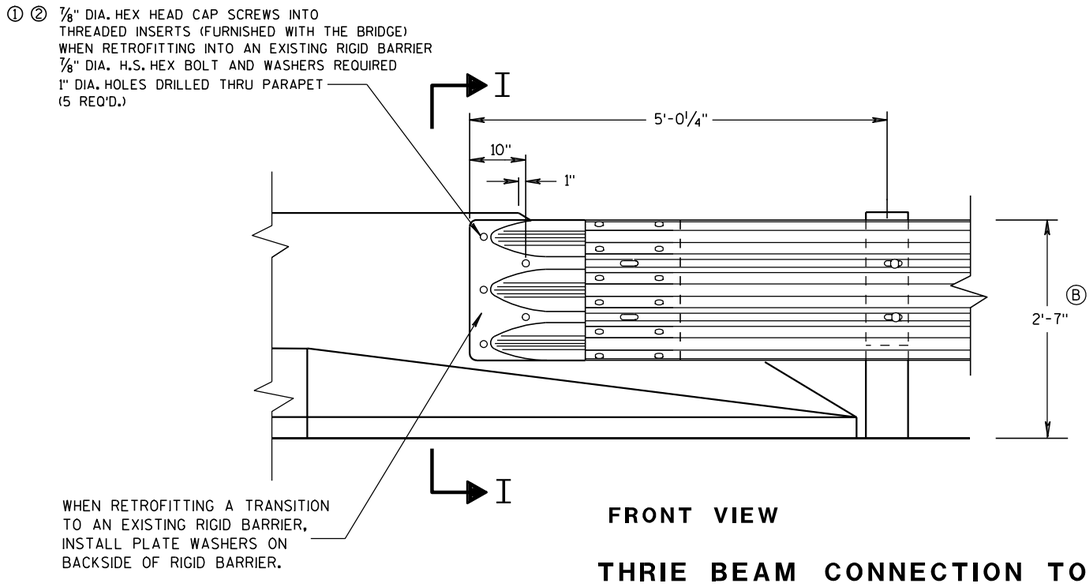

FRONT VIEW

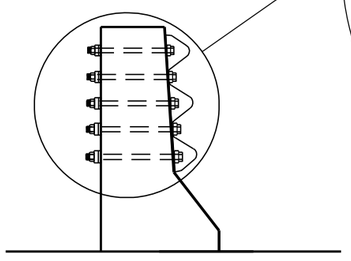

SECTION I-I

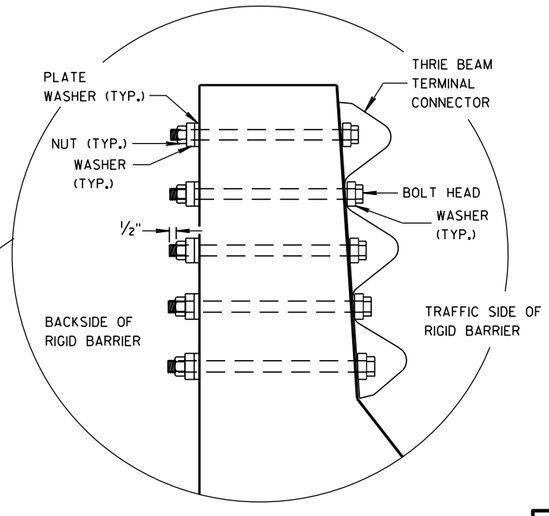

THRIE BEAM CONNECTION TO BRIDGE PARAPETS WITH SLOPED ENDS

MIDWEST GUARDRAIL SYSTEM
THRIE BEAM TRANSITION (MGS)

STATE OF WISCONSIN
DEPARTMENT OF TRANSPORTATION

APPROVED

8/31/2012
DATE

/S/ Jerry H. Zogg
ROADWAY STANDARDS ENGINEER

114

ENT

FHWA

6

S.D.D. 14 B 45-3f

6

S.D.D. 14 B 45-3f

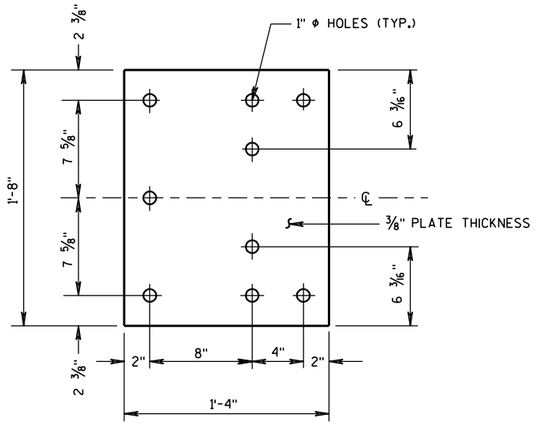

BACK-UP PLATE DETAIL

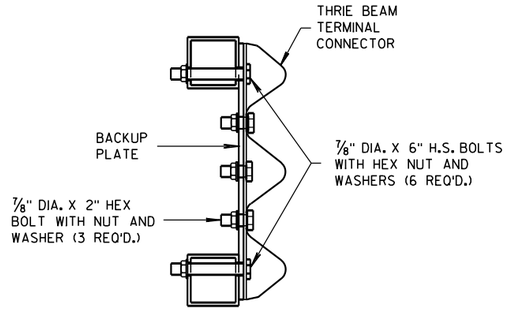

SECTION J-J

GENERAL NOTES

(1) DRILLING HOLES THROUGH THE PAPRPET, BOLTS, NUTS, WASHERS AND REPAIRING DAMAGED CONCRETE ARE INCIDENTAL TO THE CONTRACT.

(B) TOLERANCE FOR TOP OF BEAM IS ± 1".

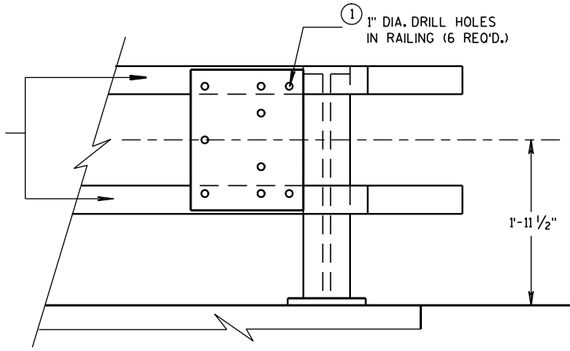

BACK-UP PLATE MOUNTING ONTO BRIDGE RAILING

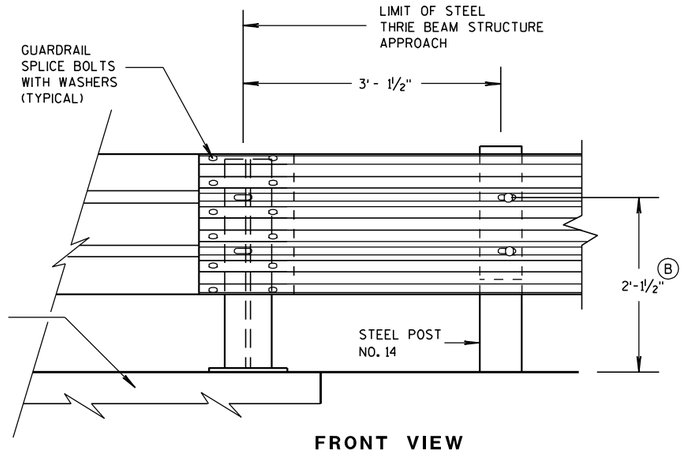

FRONT VIEW

THRIE BEAM CONNECTION TO STEEL RAILING TYPE "W"

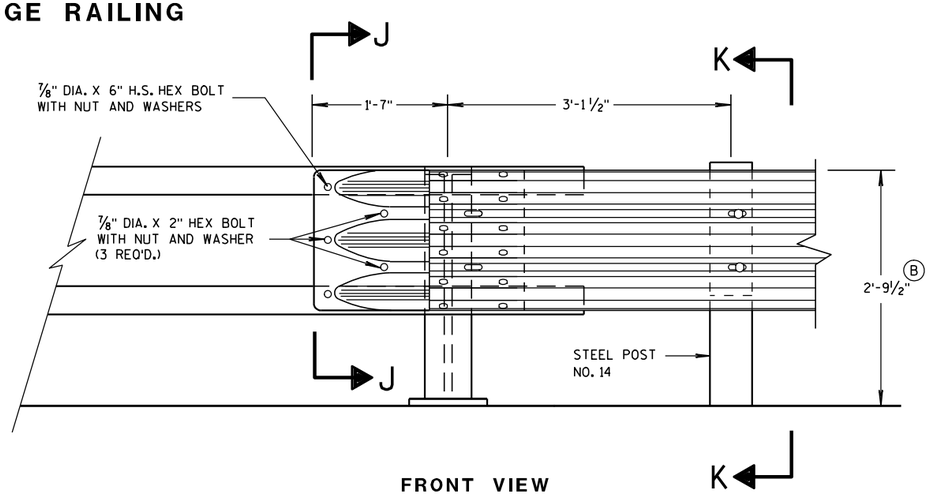

FRONT VIEW

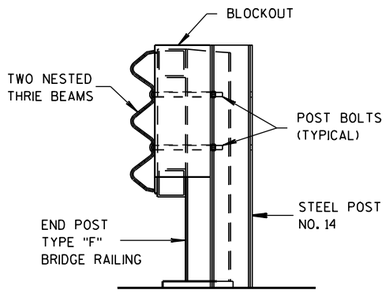

SECTION K-K

THRIE BEAM CONNECTION TO TUBULAR RAILING TYPE "F"

MIDWEST GUARDRAIL SYSTEM
THRIE BEAM TRANSITION (MGS)

STATE OF WISCONSIN
DEPARTMENT OF TRANSPORTATION

APPROVED
8/31/2012 — DATE
/S/ Jerry H. Zogg — ROADWAY STANDARDS DEVELOPMENT ENGINEER
FHWA

6

S.D.D. 14 B 45-3g

6

S.D.D. 14 B 45-3g

GENERAL NOTES

(B) TOLERANCE FOR TOP OF W-BEAM RAIL IS ± 1".

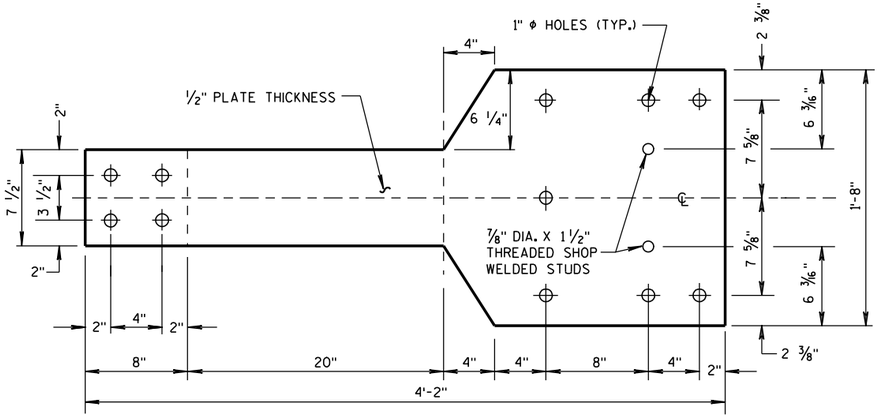

FRONT VIEW

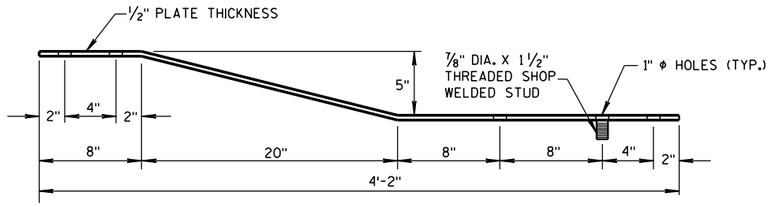

PLAN VIEW

BACK-UP PLATE DETAIL, TYPE "M"

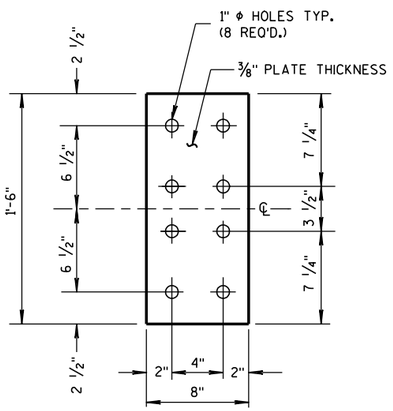

FRONT VIEW

ANCHOR PLATE DETAIL, TYPE "M"

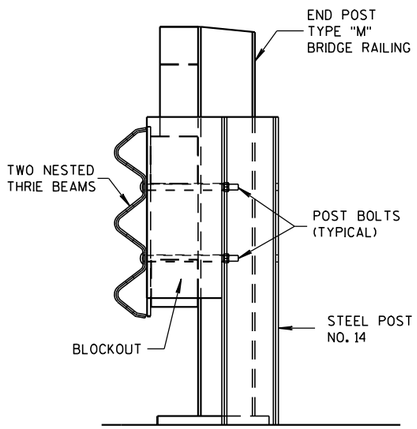

SECTION M-M

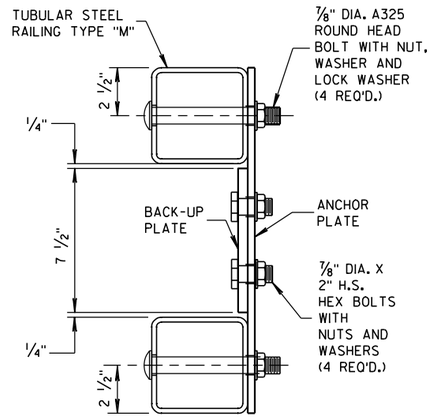

SECTION L-L

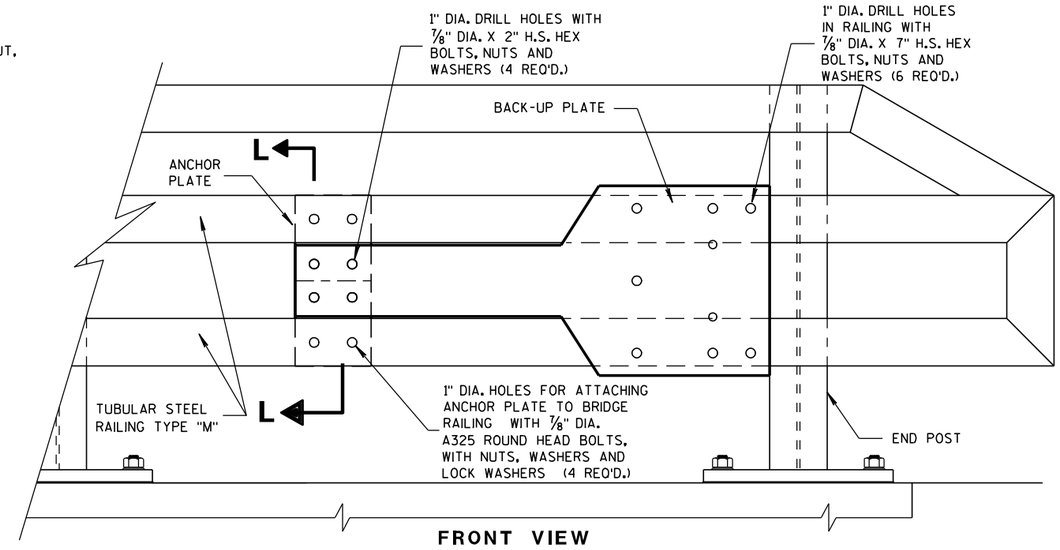

FRONT VIEW

ANCHOR AND BACK-UP PLATE MOUNTING TO BRIDGE RAILING, TYPE "M"

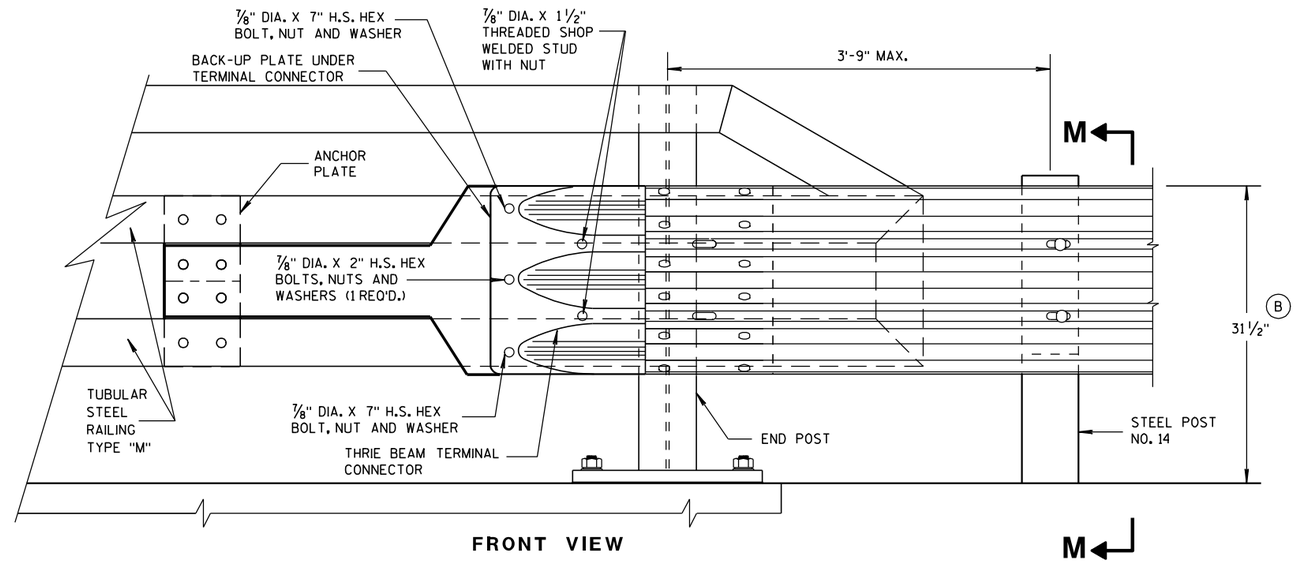

FRONT VIEW

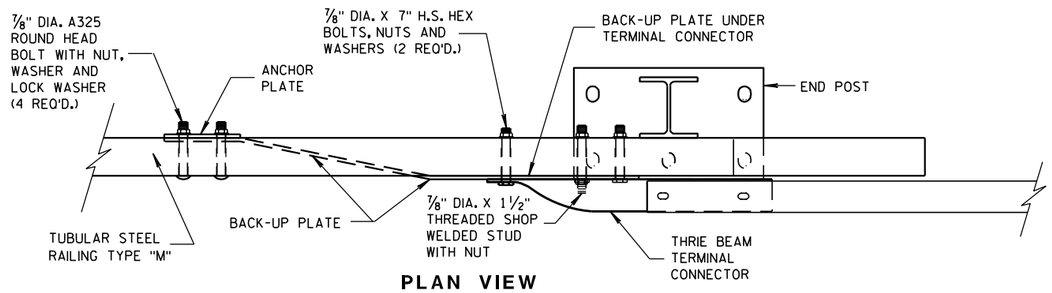

PLAN VIEW

THRIE BEAM CONNECTION TO TUBULAR RAILING, TYPE "M"

MIDWEST GUARDRAIL SYSTEM
THRIE BEAM TRANSITION (MGS)

STATE OF WISCONSIN
DEPARTMENT OF TRANSPORTATION

APPROVED
8-31-2012 DATE
/S/ Jerry H. [illegible]
ROADWAY STANDARDS ENGINEER
FHWA

6

S.D. 14 B 45-3h

6

S.D. 14 B 45-3h

GENERAL NOTES

COVER PLATE PANELS ARE 3/16" THICK.

ALL STIFFENERS ARE 1/4" THICK.

CONNECTOR PLATE SHALL BE FABRICATED FROM ASTM GRADE A36 STEEL AND GALVANIZED.

FOR GALVANIZED REQUIREMENTS, SEE SECTION 614 OF THE STANDARD SPECIFICATIONS.

ALL HOLE DIAMETERS SHALL BE 1".

FOR OPPOSITE SIDE INSTALLATION MIRROR DRAWINGS.

(1) STIFFENERS LOCATED AT THE OUTSIDE EDGES OF THE COVER PLATES SHALL BE WELDED AS FOLLOWS:
SINGLE BEVEL GROOVE WELD ON EXTERNAL SIDES AND 3/16" FILLET WELD BY 1" LONG SPACED AT 2" ON INTERNAL SIDES.

(2) STIFFENERS LOCATED ON THE INSIDE OF THE COVER PLATE SHALL BE WELDED AS FOLLOWS:
3/16" FILLET WELD BY 1" LONG SPACED AT 2".

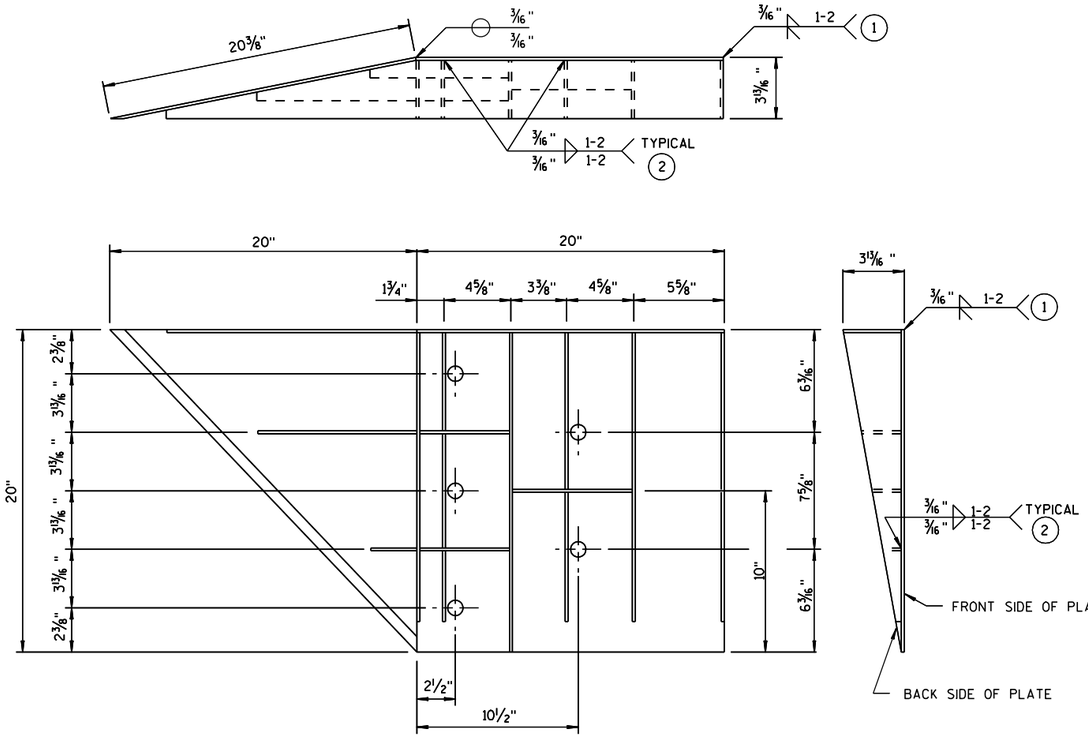

WELDING INSTRUCTION

(VIEWED FROM BACK SIDE OF PLATE)

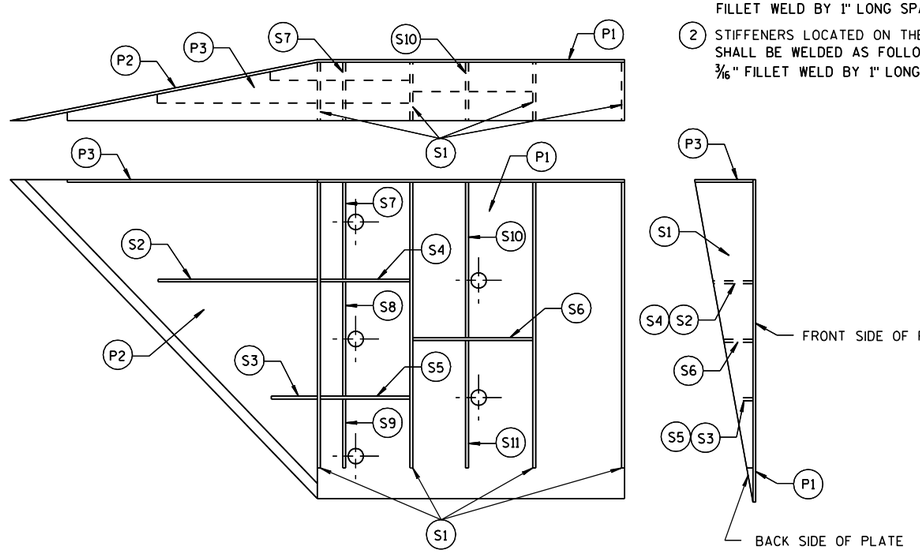

PLATE AND STIFFENER IDENTIFICATION

(VIEWED FROM BACK SIDE OF PLATE)

CONNECTOR PLATE DIMENSION (PER ASSEMBLY)

PLATE	QUANTITY	SHAPE	SIZE (A x B x C x D)	THICKNESS
P1	1		20" x 20"	3/16"
P2	1		20" x 20" x 28 9/16"	3/16"
P3	1		39" x 3 5/8" x 20" x 19 5/16"	3/16"
S1	4		18 7/16" x 3 5/8" x 18 3/4"	1/4"
S2	1		10 1/4" x 2 7/16" x 10 3/8" x 1/2"	1/4"
S3	1		3" x 1 1/16" x 3 1/8" x 1/2"	1/4"
S4	1		6 1/8" x 2 7/16"	1/4"
S5	1		6 1/8" x 1 1/16"	1/4"
S6	1		7 3/4" x 1 3/4"	1/4"
S7	1		2 9/16" x 6" x 3 5/8" x 5 7/8"	1/4"
S8	1		1 5/32" x 7 1/2" x 2 1/2" x 7 3/8"	1/4"
S9	1		6 1/16" x 6 3/16" x 1 3/32"	1/4"
S10	1		1 7/8" x 9 7/8" x 3 5/8" x 9 11/16"	1/4"
S11	1		8 1/2" x 8 3/4" x 1 13/16"	1/4"

SINGLE SLOPE CONNECTION PLATE

MIDWEST GUARDRAIL SYSTEM
THRIE BEAM TRANSITION (MGS)

STATE OF WISCONSIN
DEPARTMENT OF TRANSPORTATION

APPROVED
8/31/2012
DATE
/S/ Jerry H ----
ROADWAY STANDARDS ENGINEER
FHWA

6
S.D.D. 14 B 45-3i

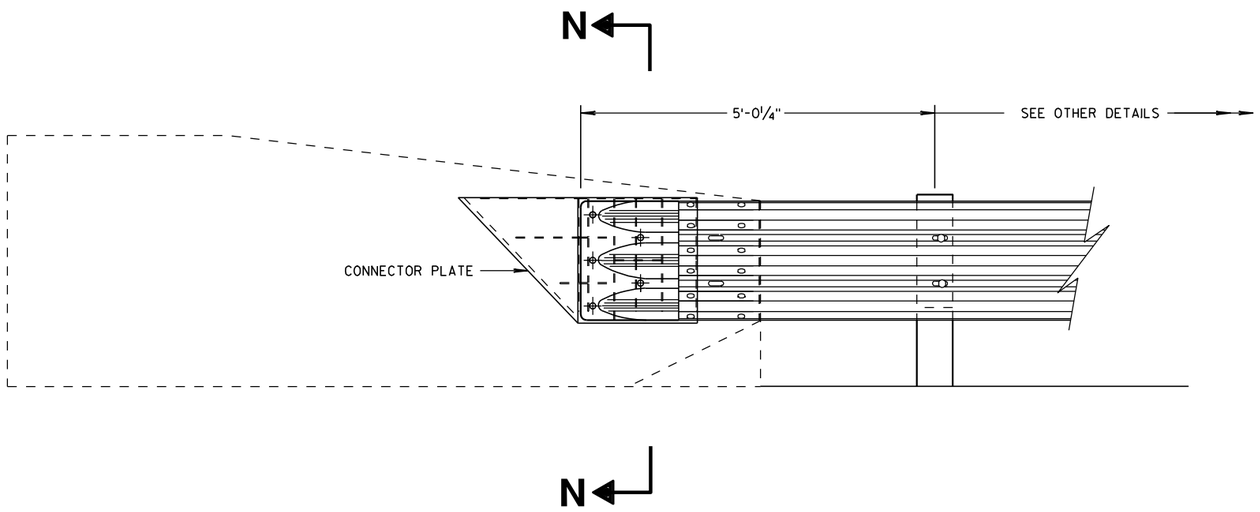

THRIE BEAM CONNECTION TO SINGLE SLOPE BARRIER

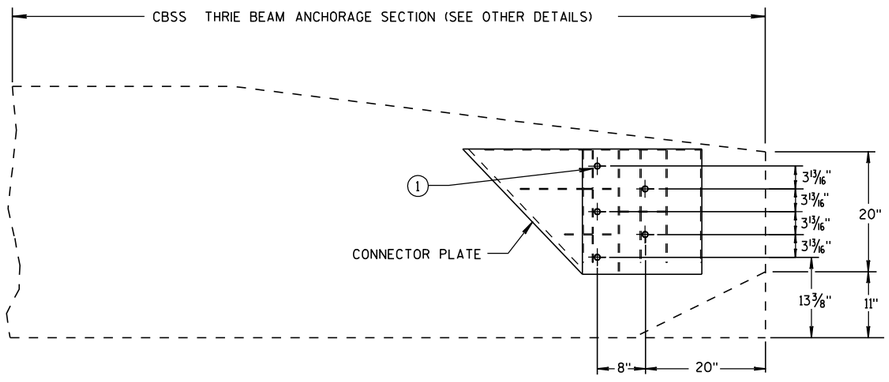

SINGLE SLOPE CONNECTION PLATE PLACEMENT

GENERAL NOTES

CONNECTOR PLATE, DRILLING BOLT HOLES THROUGH THE PARAPET, BOLTS, NUTS, WASHERS AND REPAIRING DAMAGED CONCRETE ARE INCIDENTAL TO THE CONTRACT.

(1) BOLTS MAY BE A325 BOLTS OR A449 BOLTS. BOLT LENGTH AND THREADING LENGTH ARE TO ALLOW FOR A TIGHT CONNECTION BETWEEN RIGID BARRIER AND THRIE BEAM CONNECTION PLATE. CONTRACTOR IS TO FIELD VERIFY BOLT LENGTH AND THREAD LENGTH. ONE ROUND WASHER REQUIRED BETWEEN BOLT HEAD AND THRIE BEAM CONNECTOR PLATE. BOLTS THAT EXTEND THROUGH THE PARAPET AND OUT THE BACK FACE REQUIRE A HARDENED ROUND STEEL WASHER THAT IS 2" O.D. X ⅝" THICK AND ONE PLATE WASHER. REPAIR ANY DAMAGED CONCRETE FROM BOLT INSTALLATION.

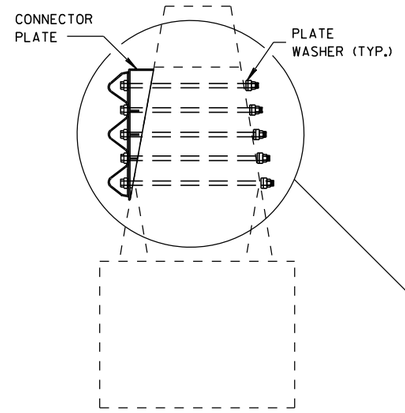

SECTION N-N

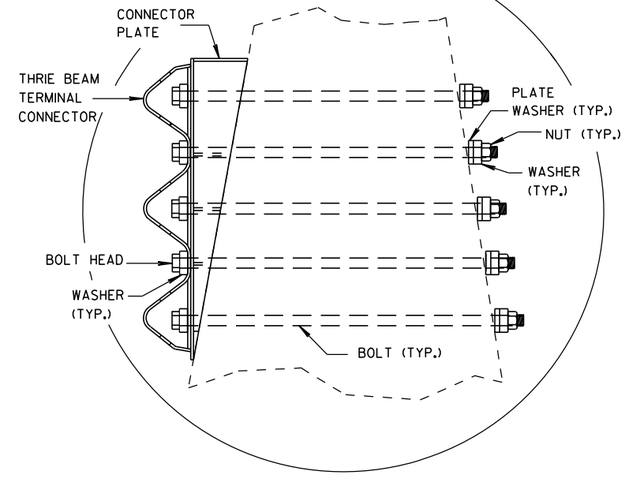

MIDWEST GUARDRAIL SYSTEM
THRIE BEAM TRANSITION (MGS)

STATE OF WISCONSIN
DEPARTMENT OF TRANSPORTATION

APPROVED

8/31/2012
DATE

/S/ Jerry H. [illegible]
ROADWAY STANDARDS DEVELOPMENT ENGINEER

FHWA

6

S.D.D. 14 B 45-3j

6

S.D.D. 14 B 45-3j

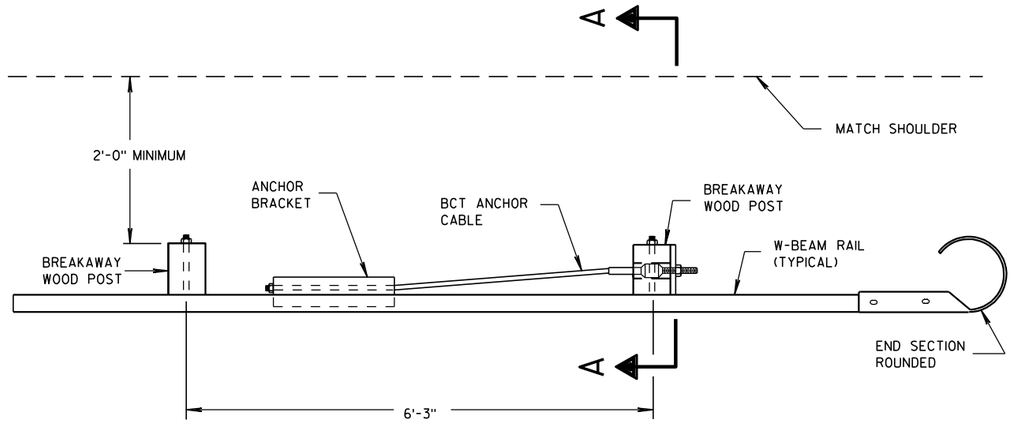

PLAN VIEW

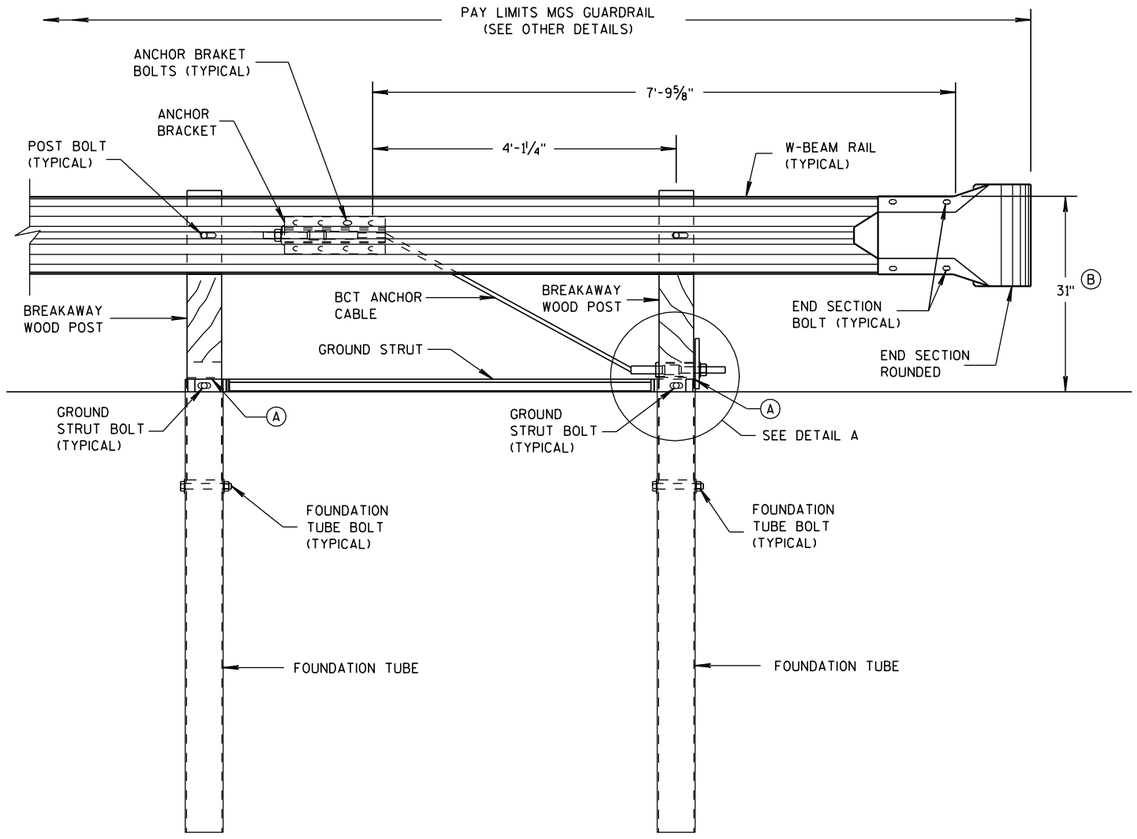

FRONT VIEW

END RAIL DETAIL

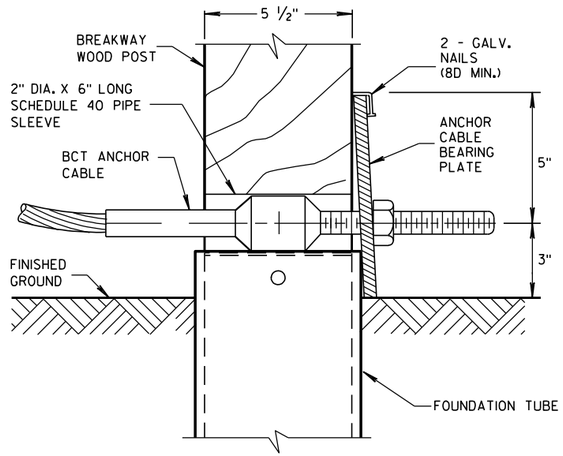

DETAIL A

POST NO. 1
GROUNG STRUT NOT SHOWN FOR CLARITY.

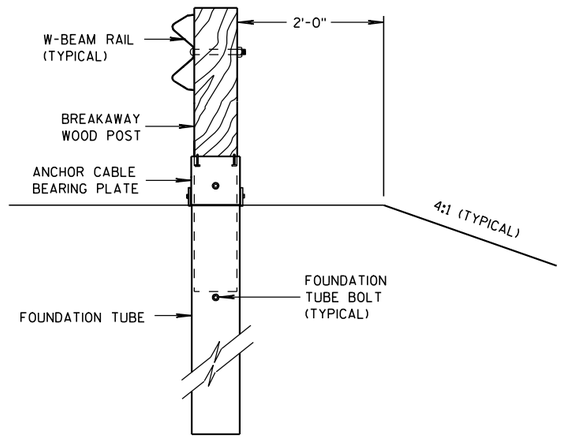

SECTION A-A

GENERAL NOTES

SEE SDD 14 B 42 FOR MORE INFORMATION.

POST BOLTS ARE A ⅝" DIAMETER X 10" LONG GUARDRAIL BOLT. A POST BOLT REQUIRES A ⅝" DIAMETER DH MODIFIED (RECESSED) HEAVY HEX NUT AND ⅝" DIAMETER FLAT WASHER.

FOUNDATION TUBE BOLTS ARE A ⅞" DIAMETER X 7½" LONG HEAVY HEX HEAD BOLT. A FOUNDATION TUBE BOLT REQUIRES A ⅞" DIAMETER DH HEAVY HEX NUT AND A ⅝" DIAMETER FLAT WASHER.

GROUND STRUT BOLTS ARE A ⅝" DIAMETER X 10" LONG HEAVY HEX HEAD BOLT. A GROUND STRUT BOLT REQUIRES A ⅝" DIAMETER DH HEAVY HEX NUT AND A ⅝" DIAMETER FLAT WASHER.

ANCHOR BRAKET BOLTS ARE A ⅝" DIAMETER X 1½" LONG HEAVY HEX HEAD BOLT. AN ANCHOR BRAKET BOLT REQUIRES A ⅝" DIAMETER DH HEAVY HEX NUT AND A FLAT WASHER.

END SECTION BOLTS ARE A ⅝" DIAMETER X 1½" HEAVY HEX HEAD BOLT. AN END SECTION BOLT REQUIRES ⅝" DIAMETER DH HEAVY HEX NUT AND A ⅝" DIAMETER FLAT WASHER.

W-BEAM END SECTION ROUNDED HAS THE SAME MATERIAL PROPERTIES AS STANDARD STEEL RAIL.

(A) TOP OF FOUNDATION TUBE SHALL BE NO MORE THAN 3" ABOVE FINISHED GROUND.

(B) FOR NEW CONSTRUCTION TOP OF RAIL IS 31" ± 1".
FOR EXISTING INSTALLATIONS TOP OF RAIL IS BETWEEN 27¾" TO 32" ± 1".

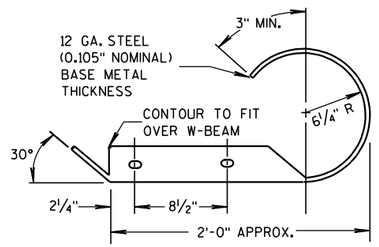

PLAN VIEW

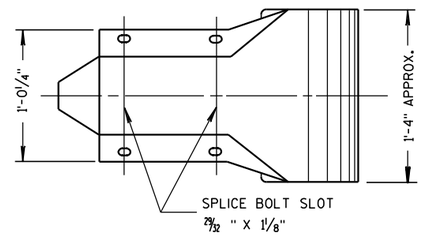

FRONT VIEW

W BEAM END SECTION ROUNDED

MIDWEST GUARDRAIL SYSTEM (MGS) TYPE 2 TERMINAL

STATE OF WISCONSIN
DEPARTMENT OF TRANSPORTATION

6
S.D.D. 14 B 47-1a

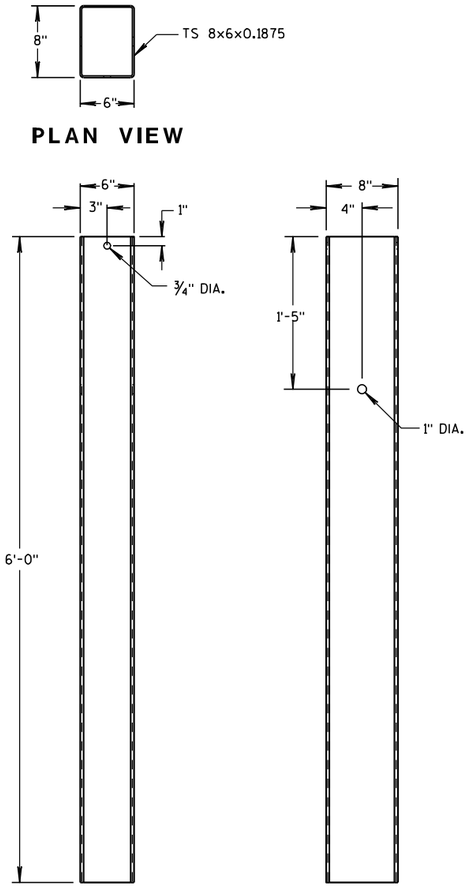

PLAN VIEW

FRONT VIEW

SIDE VIEW

FOUNDATION TUBE

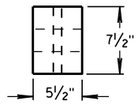

PLAN VIEW

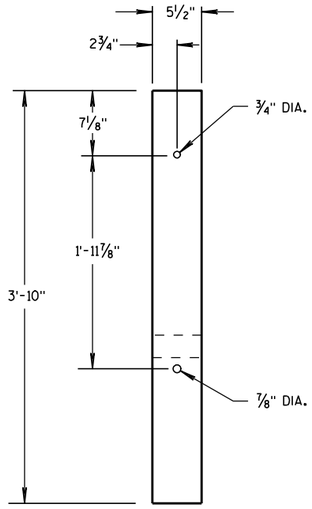

FRONT VIEW

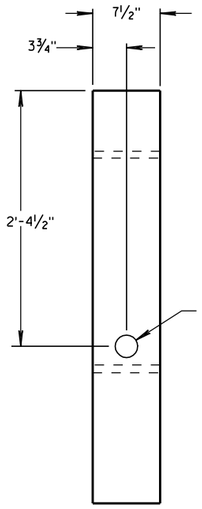

SIDE VIEW

BREAKAWAY WOOD POST

GENERAL NOTES

BCT ANCHOR CABLE IS A ⅜" DIAMETER 6X19 IWRC IPS GALVANIZED WIRE ROPE. THE SWAGED FITTINGS AND STUD ARE REQUIRED. THE END FITTING SHALL BE MACHINED FROM HOT-ROLLED CARBON STEEL CONFORMING TO ASTM A576 GRADE 1035 AND GALVANIZED ACCORDING TO ASTM A123. THE TREADED STUD SHOULD CONFORM TO ASTM A325 OR SAE GRADE 5. MINIMUM BREAKING STRENGTH OF WIRE ROPE IS 43,000 LB. TIGHTEN WIRE ROPE TO TAUT.

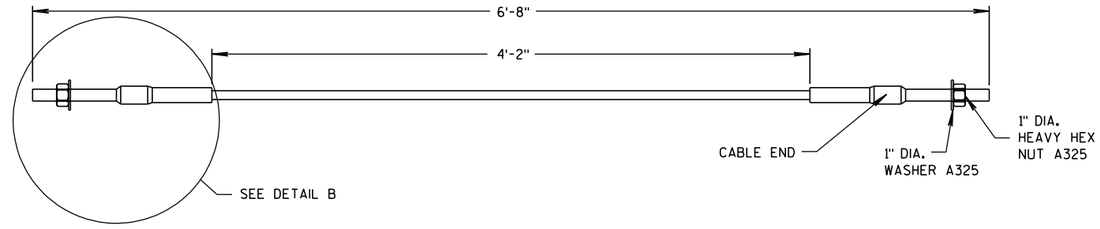

BCT ANCHOR CABLE

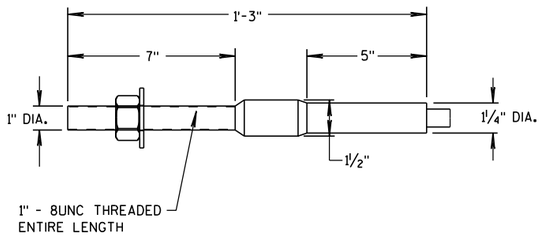

DETAIL B

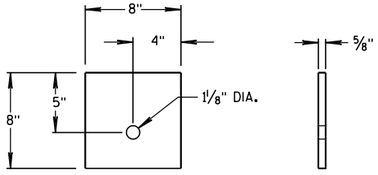

SIDE VIEW FRONT VIEW

ANCHOR CABLE
BEARING PLATE

MIDWEST GUARDRAIL
SYSTEM (MGS) TYPE 2 TERMINAL

STATE OF WISCONSIN
DEPARTMENT OF TRANSPORTATION

6

S.D.D. 14 B 47-1b

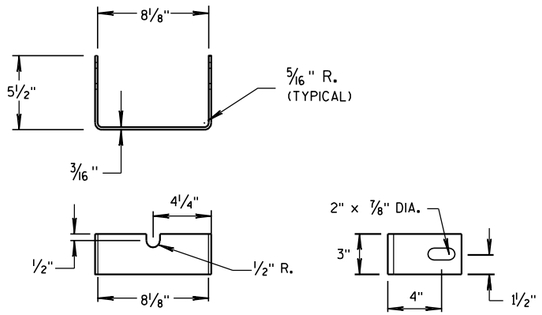

YOKE DETAIL

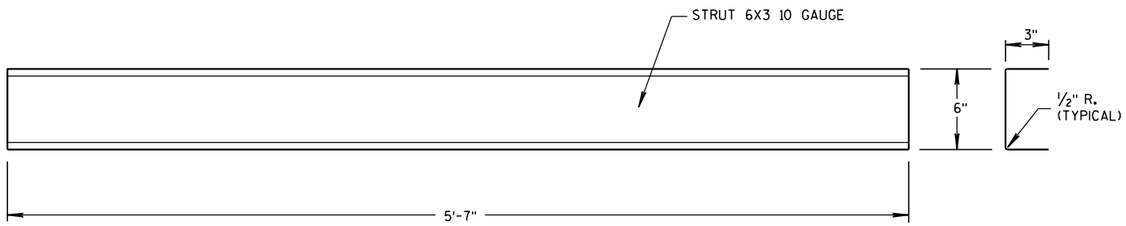

STRUT DETAIL

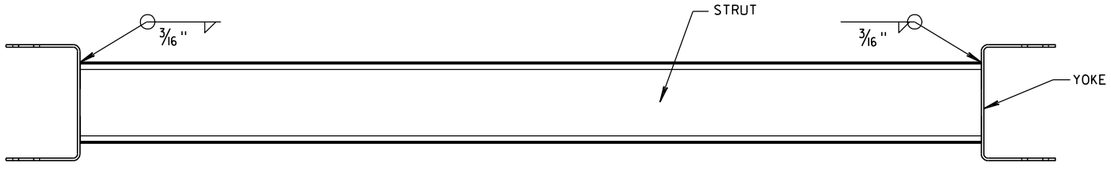

PLAN VIEW

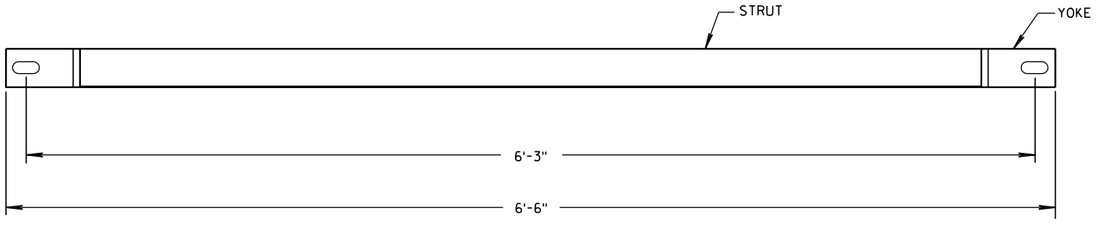

FRONT VIEW

GROUND STRUT DETAIL

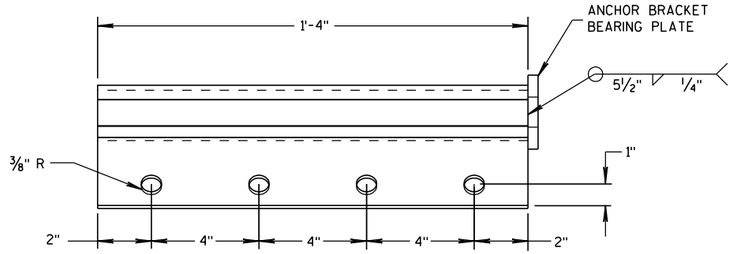

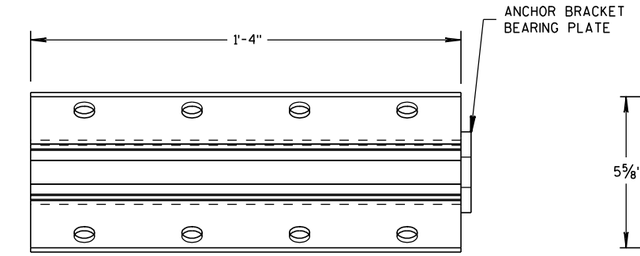

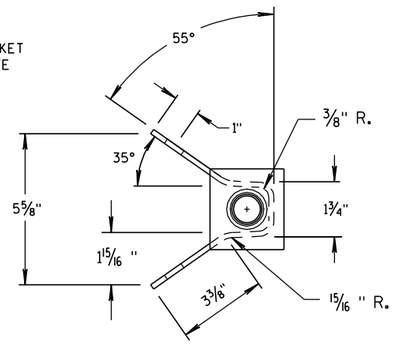

ANCHOR BRACKET

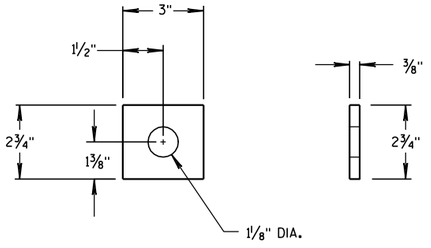

ANCHOR BRACKET BEARING PLATE

6

6

S.D.D. 14 B 47-1c

S.D.D. 14 B 47-1c

MIDWEST GUARDRAIL SYSTEM (MGS) TYPE 2 TERMINAL

STATE OF WISCONSIN
DEPARTMENT OF TRANSPORTATION

APPROVED

5/23/2011
DATE

/S/ Jerry H. [illegible]
ROADWAY STANDARDS ENGINEER

FHWA

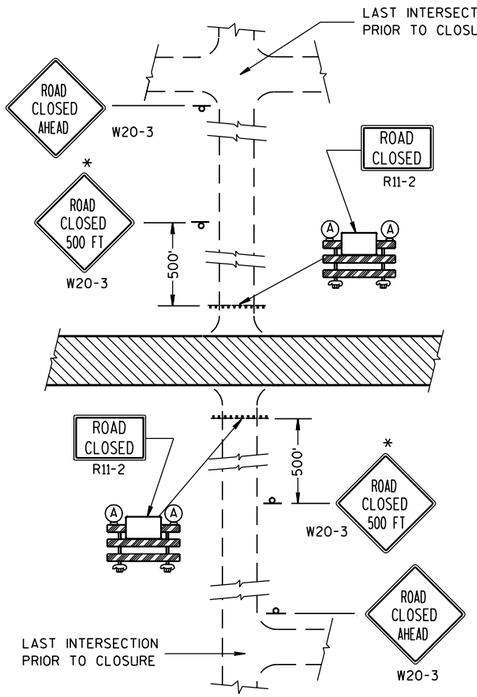

DETAIL 1

(NO ACCESS TO PROJECT)

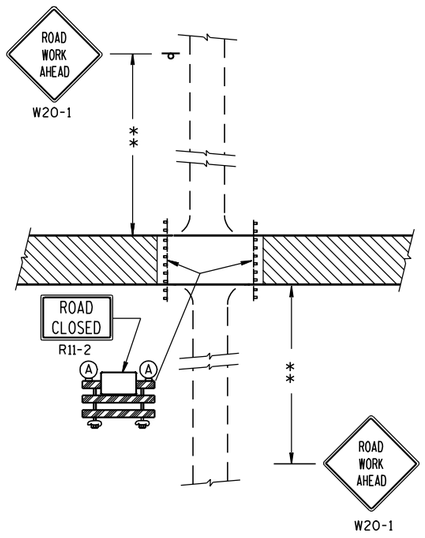

DETAIL 2

(PUBLIC CROSS-TRAFFIC MAINTAINED. NO ACCESS TO PROJECT).

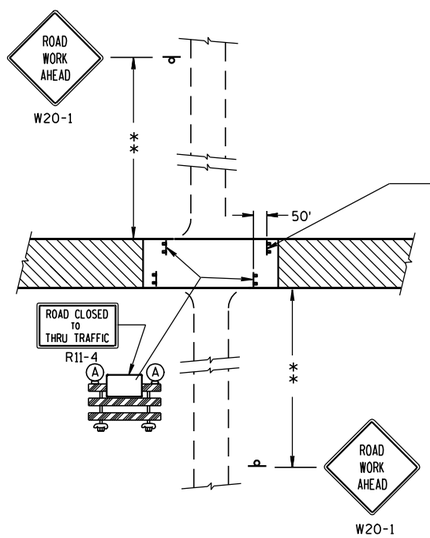

DETAIL 3

(PUBLIC CROSS-TRAFFIC MAINTAINED. CONTRACTOR, LOCAL BUSINESS AND RESIDENT ACCESS).

FOR BRIDGE OR CULVERT REPLACEMENT, USE ADDITIONAL SIGN ON BARRICADE

BRIDGE OUT
XX MILES AHEAD
R11-3 (MOD.)

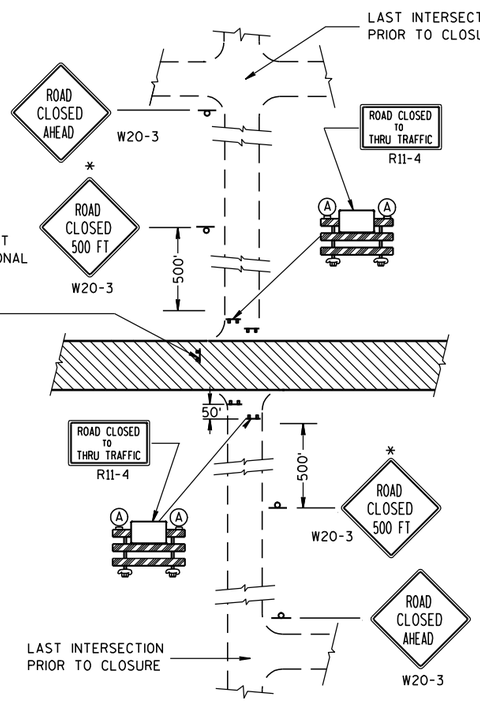

DETAIL 4

(CONTRACTOR, LOCAL BUSINESS AND RESIDENT ACCESS TO PROJECT)

GENERAL NOTES

THE EXACT NUMBER, LOCATION, AND SPACING OF ALL SIGNS AND BARRICADES SHALL BE ADJUSTED TO FIT FIELD CONDITIONS AS APPROVED BY THE ENGINEER.

ANY SIGNS TEMPORARY OR EXISTING, WHICH CONFLICT WITH TRAFFIC CONTROL "IN USE" SHALL BE REMOVED OR COVERED AS NEEDED AND AS APPROVED BY THE ENGINEER.

THE SPACING BETWEEN TRAFFIC CONTROL SIGNS SHOULD BE ADJUSTED TO NOT CONFLICT WITH AND SHOULD PROVIDE A DESIRABLE MINIMUM OF 200 FEET CLEARANCE TO EXISTING SIGNS THAT WILL REMAIN IN PLACE.

IF A "STOP" SIGN MUST BE REMOVED FOR A WORK OPERATION, A TEMPORARY "STOP" SIGN SHALL BE PLACED PRIOR TO THE SIGN REMOVAL, OR A FLAGGER SHALL BE PROVIDED UNTIL THE SIGN IS RE-ESTABLISHED.

BARRICADES THAT MUST BE MOVED FOR A WORK OPERATION SHALL BE IMMEDIATELY RE-ESTABLISHED UPON COMPLETION OF THE OPERATION OR, FOR CONTINUING OPERATIONS, AT THE END OF EACH WORKING DAY.

SIGNS THAT WILL BE IN PLACE LESS THAN 7 CONTINUOUS DAYS AND NIGHTS MAY BE MOUNTED ON PORTABLE SUPPORTS.

ALL TYPE III BARRICADES SHALL HAVE RAILS REFLECTORIZED ON BOTH FACES. STRIPES SHALL BE PROPERLY SLOPED DOWN TOWARD THE TRAFFIC SIDE OR AS SHOWN IN THE ROAD CLOSURE BARRICADE DETAIL D FOR FULL ROAD CLOSURES.

TYPE "A" LOW-INTENSITY FLASHING WARNING LIGHTS SHALL BE VISIBLE ON BOTH SIDES OF THE BARRICADE.

THE R11-2, R11-3 AND R11-4 SIGNS PLACED ON BARRICADES SHALL COVER NO MORE THAN THE TOP RAIL. THE SIGNS SHALL NOT COVER ANY PORTION OF THE MIDDLE OR BOTTOM RAILS.

THE REFLECTIVE SHEETING USED ON R11-2, R11-3 AND R11-4 SIGNS SHALL COMPLY WITH SUBSECTION 637.2.2.2 OF THE STANDARD SPECIFICATIONS.

ALL SIGNS SHALL BE 48" X 48" UNLESS OTHERWISE NOTED BELOW:
R11-2 SHALL BE 48" X 30".
R11-4 AND R11-3 SHALL BE 60" X 30".

*OMIT THE "ROAD CLOSED 500 FT." SIGN IF THE LAST INTERSECTION IS 500 FT. OR LESS FROM THE WORK ZONE.

**500' MAX. OR AT LAST INTERSECTION WHICHEVER IS CLOSER.

LEGEND

- POST MOUNTED WARNING SIGN
- TYPE III BARRICADES
- (A) TYPE "A" LOW INTENSITY FLASHING WARNING LIGHT (FOR NIGHT USE)
- WORK AREA

BARRICADES AND SIGNS FOR SIDEROAD CLOSURES

STATE OF WISCONSIN
DEPARTMENT OF TRANSPORTATION

APPROVED

9-16-03 DATE

/S/ Thomas N. N[illegible] INEER
CHIEF SIGNS AND MAR

FHWA

6

S.D.D. 15 C 3-1

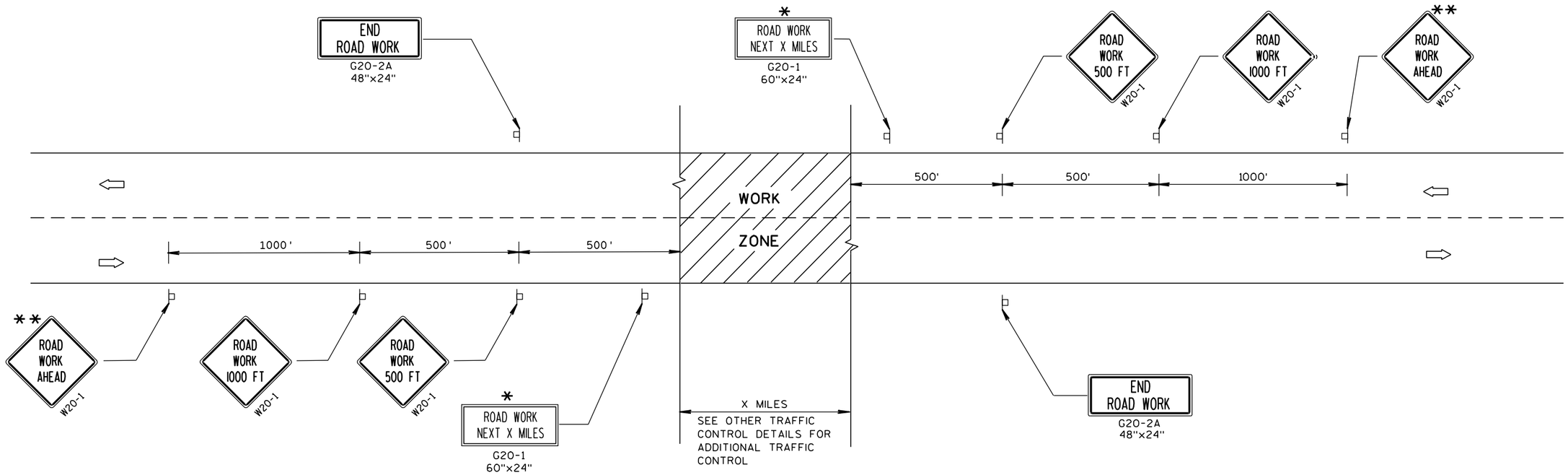

TYPICAL SIDEROAD APPROACH WARNING SIGN DETAIL

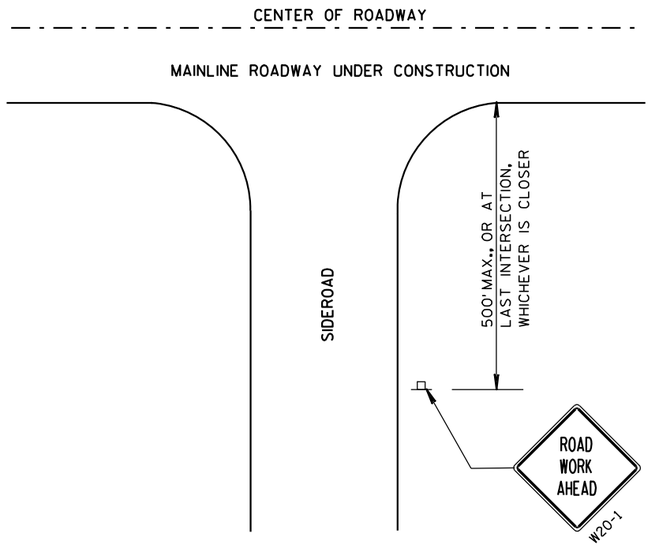

GENERAL NOTES

THE EXACT NUMBER, LOCATION, AND SPACING OF ALL SIGNS AND DEVICES SHALL BE ADJUSTED TO FIT FIELD CONDITIONS.

THE SPACING BETWEEN TRAFFIC CONTROL SIGNS SHOULD BE ADJUSTED TO NOT CONFLICT WITH AND SHOULD PROVIDE A MINIMUM OF 200 FEET (500 FEET DESIRABLE) CLEARANCE TO EXISTING SIGNS THAT WILL REMAIN IN PLACE.

ALL SIGNS ARE 48"x48" UNLESS OTHERWISE NOTED.

SIGNS THAT WILL BE IN PLACE LESS THAN 7 CONTINUOUS DAYS AND NIGHTS MAY BE MOUNTED ON PORTABLE SUPPORTS.

IF A "STOP" SIGN MUST BE REMOVED FOR A WORK OPERATION, A TEMPORARY "STOP" SIGN SHALL BE PLACED PRIOR TO THE SIGN REMOVAL, OR A FLAGGER SHALL BE PROVIDED UNTIL THE SIGN IS RE-ESTABLISHED.

* OMIT G20-1 SIGNS IF LENGTH OF WORK AREA IS 2 MILES OR LESS.

** PLACE ADDITIONAL W20-1 "ROAD WORK AHEAD" SIGN IF WORK AREA WITHIN THE PROJECT IS SEPARATED BY MORE THAN 2 MILES FROM PREVIOUS WORK AREA OR SIGNING.

LEGEND

POST MOUNTED SIGN

DIRECTION OF TRAFFIC FLOW

TRAFFIC CONTROL, ADVANCE WARNING SIGNS 45 M.P.H. OR GREATER TWO-WAY UNDIVIDED ROAD OPEN TO TRAFFIC

STATE OF WISCONSIN
DEPARTMENT OF TRANSPORTATION

APPROVED

5/23/00 DATE

/S/ Chester J. [illegible] CHIEF SIGNS AND MARKING ENGINEER

FHWA

6

S.D.D. 15 C 4-1

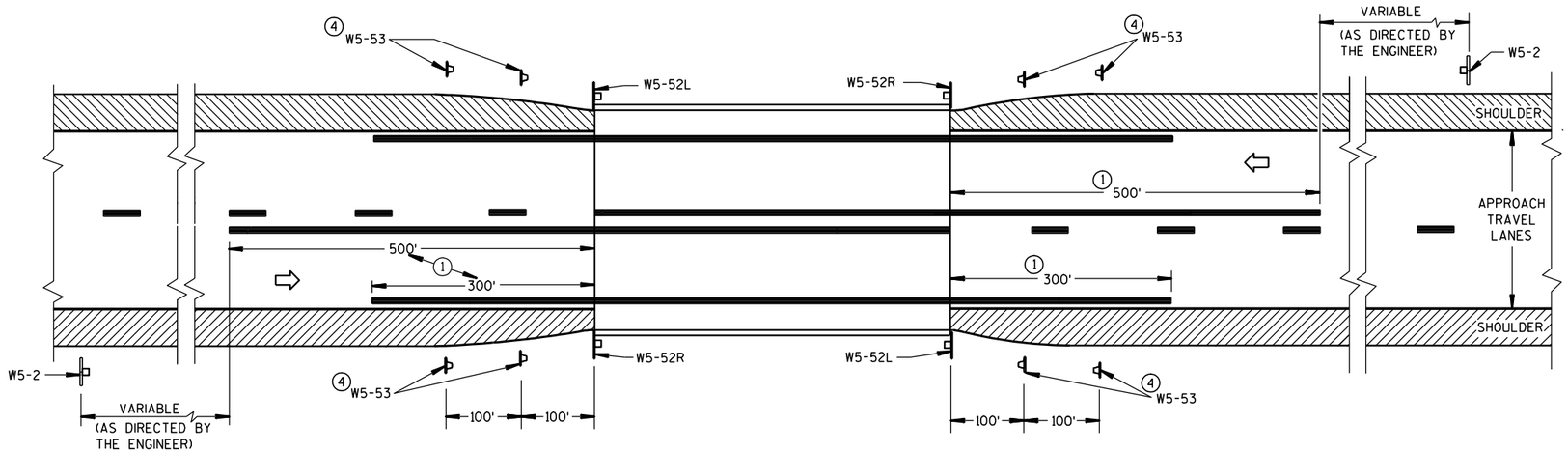

SITUATION 1

WARRANTING CRITERION:

BRIDGE WIDTH IS AT LEAST 18 FEET BUT LESS THAN 24 FEET

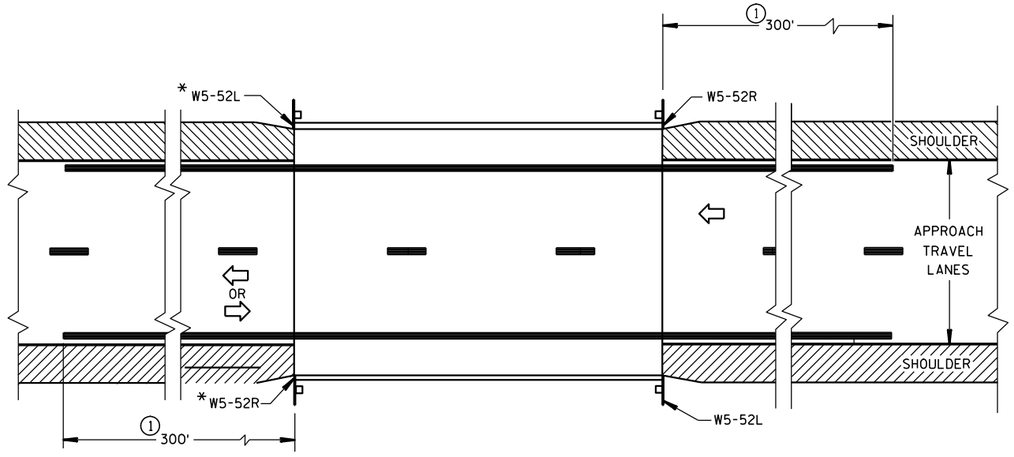

*OMIT ON ONE-WAY TRAVELLED WAYS

SITUATION 2

WARRANTING CRITERIA:

1. BRIDGE WIDTH IS AT LEAST 24 FEET AND
2. BRIDGE IS LESS THAN 6 FEET WIDER (ON EACH SIDE) THAN APPROACH TRAVEL LANES.

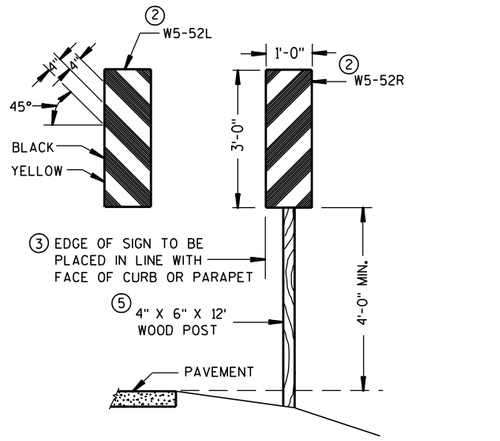

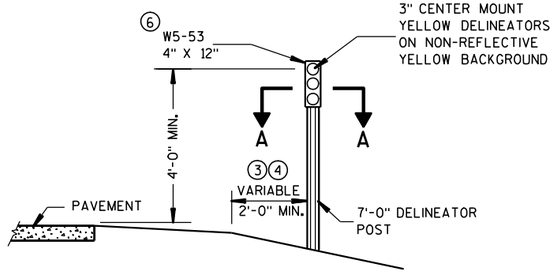

OBJECT MARKER PLACEMENT

GENERAL NOTES

DETAILS OF TRAFFIC CONTROL DEVICES AND INSTALLATION NOT SHOWN ON THIS DRAWING SHALL CONFORM TO THE PERTINENT REQUIREMENTS OF THE STANDARD SPECIFICATIONS, THE SPECIAL PROVISIONS, AND THE MANUAL ON UNIFORM TRAFFIC CONTROL DEVICES.

PAVEMENT MARKING SHOWN ON THIS DRAWING IS NOT REQUIRED UNLESS OTHERWISE SPECIFIED IN THE CONTRACT. WHEN SPECIFIED, PAVEMENT MARKING SHALL CONFORM TO THIS DRAWING AND OTHER CONTRACT REQUIREMENTS.

① MINIMUM DISTANCE UNLESS OTHERWISE SHOWN ON THE PLAN.

② FACE OF OBJECT MARKERS W5-52R AND W5-52L SHALL BE COVERED WITH TYPE H REFLECTIVE SHEETING.

③ LOCATE OBJECT MARKER POST(S) BEHIND GUARDRAIL WHEN PRESENT.

④ OBJECT MARKERS (W5-53) SHALL BE LOCATED ALONG A LINE FLARED AWAY FROM THE BRIDGE CORNER TO DELINEATE THE NARROWING OF THE SHOULDER OR BERM.

⑤ A 12 FOOT DELINEATOR POST MAY BE USED INSTEAD OF A WOOD POST.

⑥ NON-BID ITEM. INCIDENTAL TO OTHER ITEMS.

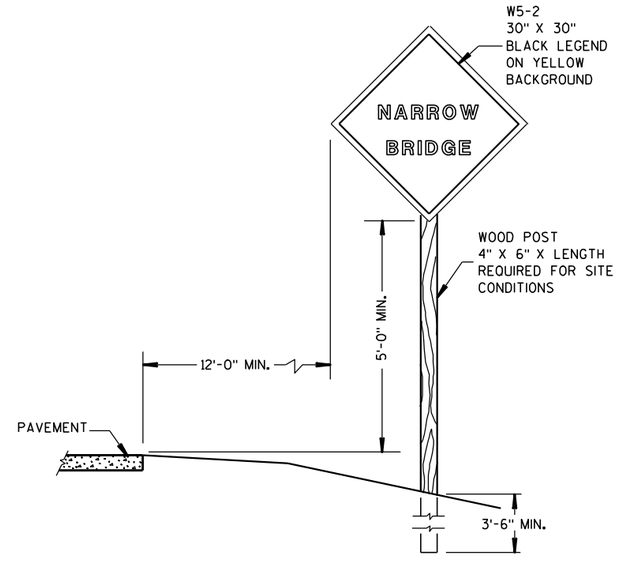

SIGN PLACEMENT

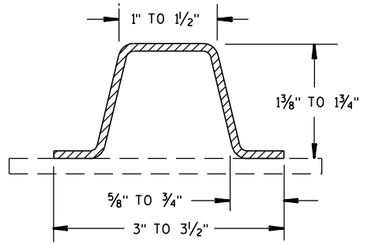

SECTION A-A

(MINIMUM WEIGHT 1.9 LBS. PER FT. AFTER GALVANIZING)

SIGNING & MARKING FOR TWO LANE BRIDGES

STATE OF WISCONSIN
DEPARTMENT OF TRANSPORTATION

APPROVED

9/5/06 — DATE

/S/ Thomas N. [illegible] — STATE TRAFFIC ENGINEER

FHWA

6

S.D.D. 15 C 6-5

6

S.D.D. 15 C 6-5

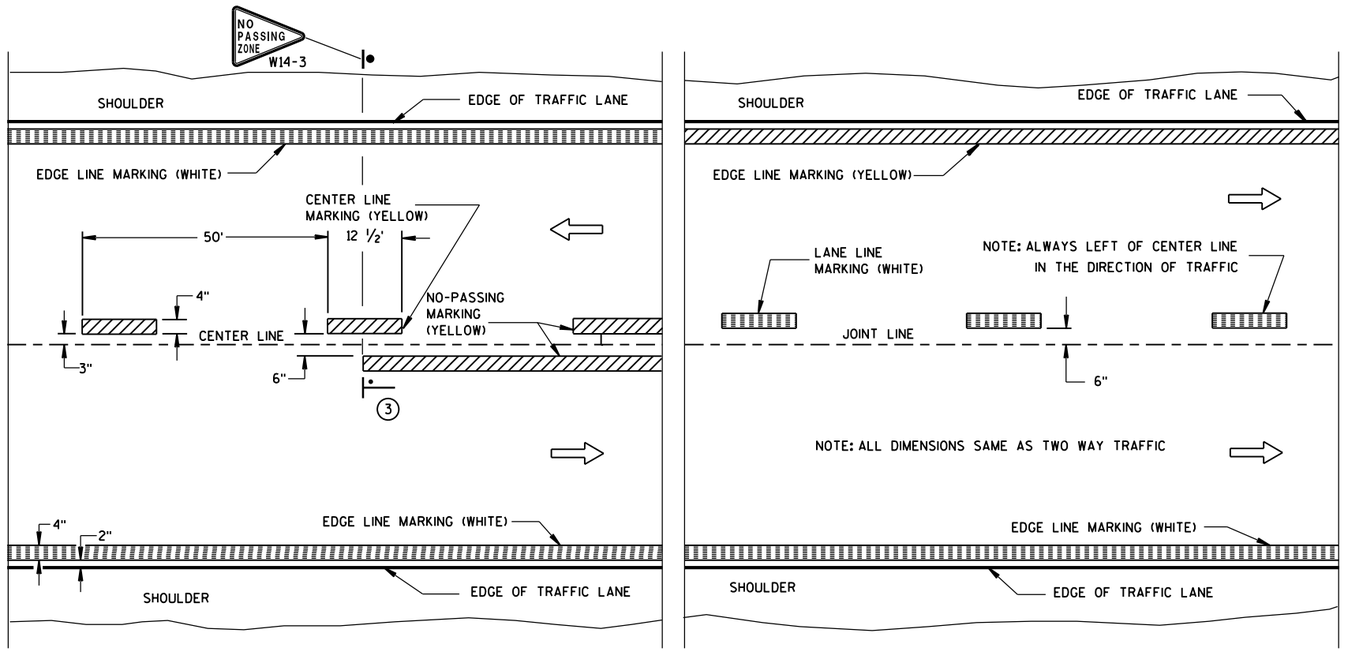

TWO WAY TRAFFIC

ONE WAY TRAFFIC

PERMANENT PAVEMENT MARKING

GENERAL NOTES

DETAILS OF CONSTRUCTION NOT SHOWN ON THIS DRAWING SHALL CONFORM TO STANDARD SPECIFICATIONS AND SPECIAL PROVISIONS.

1. HALF CYCLE LENGTHS (25'±) WITH 2' MINIMUM STRIPE LENGTHS SHALL BE PROVIDED ON ROADWAYS (INCLUDING TEMPORARY TRAVELED WAYS) WITH REVERSE CURVATURE, CURVATURE OF OVER 5 DEGREES OR WHEN DIRECTED BY THE ENGINEER TO MARK UNUSUAL ALIGNMENT OF THE TRAVELED WAY.
2. NO PASSING ZONE TEMPORARY PAVEMENT MARKING IS REQUIRED TO BE PLACED, WHERE APPROPRIATE, ALONG WITH CENTERLINE TEMPORARY PAVEMENT MARKING WHEN A SAME DAY PERMANENT PAVEMENT MARKING ITEM IS INCLUDED IN THE CONTRACT.
3. NO PASSING ZONE MARKINGS ARE PLACED ACCORDING TO "T" MARKINGS. IF EXISTING NO PASSING ZONE W14-3 SIGNS ARE BEYOND 50 FEET IN EITHER DIRECTION, THE SIGNS SHALL BE MOVED TO THE "T" MARKINGS.
4. CONCRETE ONLY.

NOTE

ARROW SYMBOL (⇨) SHOWS DIRECTION OF TRAVEL

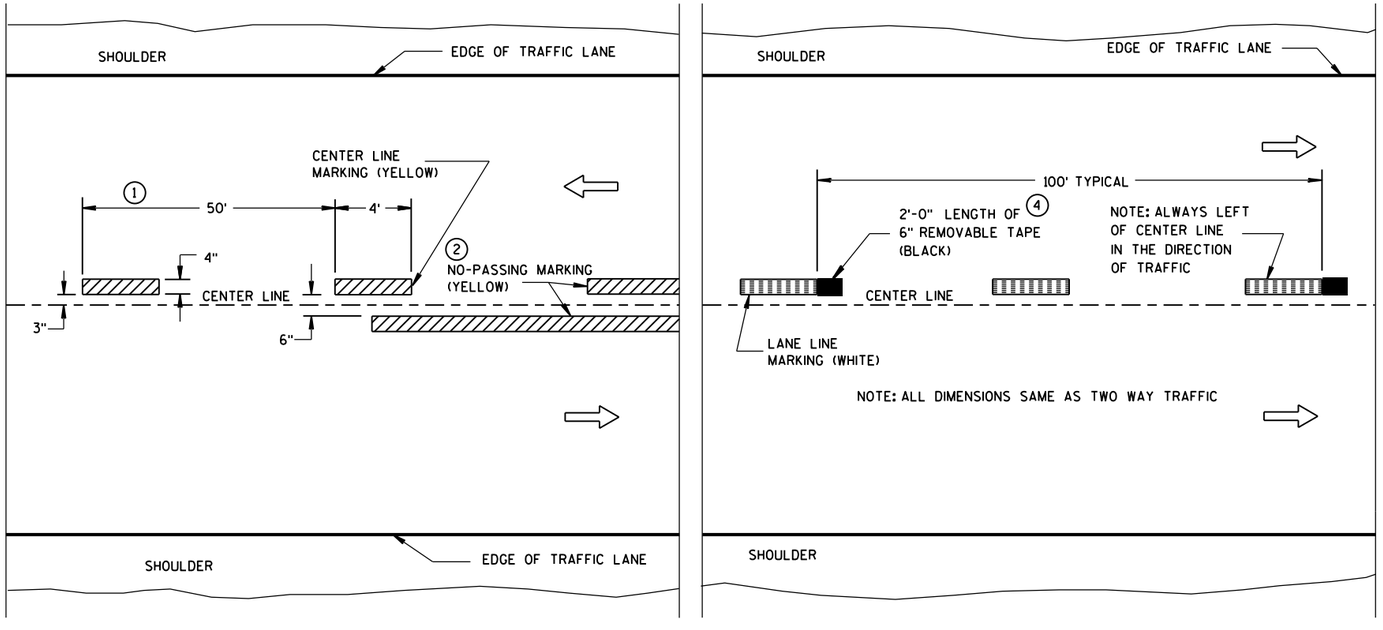

TWO WAY TRAFFIC

ONE WAY TRAFFIC

TEMPORARY (INTERMEDIATE) PAVEMENT MARKING

(SHOWS CYCLE FOR TEMPORARY CENTER LINE OR TEMPORARY LANE LINE MARKING)

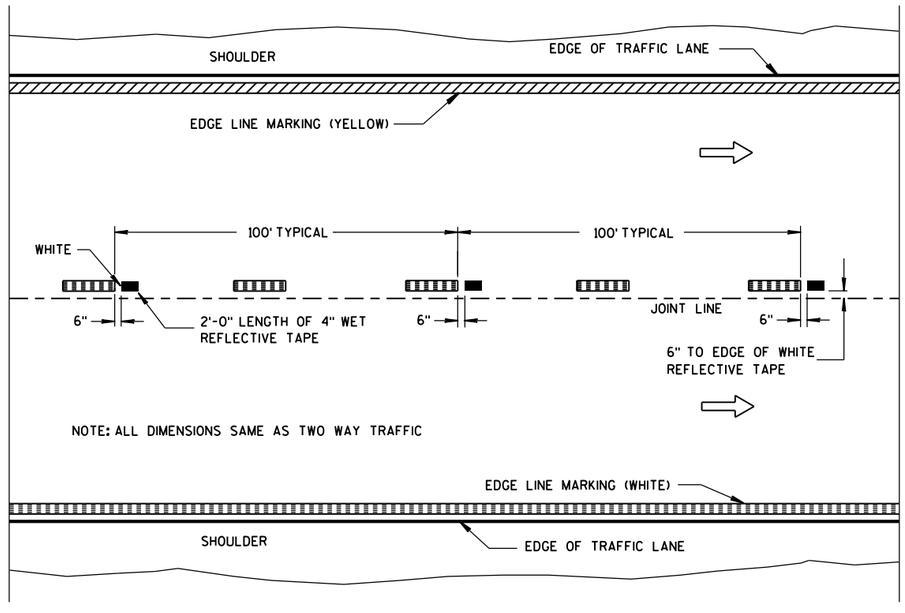

WET REFLECTIVE TAPE SUPPLEMENT TO
SPRAYED OR NON WET REFLECTIVE TAPE LANE LINE

LEGEND

"T" MARKING

POST MOUNTED SIGN

PAVEMENT MARKING (MAINLINE)

STATE OF WISCONSIN
DEPARTMENT OF TRANSPORTATION

APPROVED
10-1-2012 — DATE
/S/ Travis Feltes — STATE TRAFFIC ENGINEER
FHWA

6

S.D.D. 15 C 8-15a

6

S.D.D. 15 C 8-15a

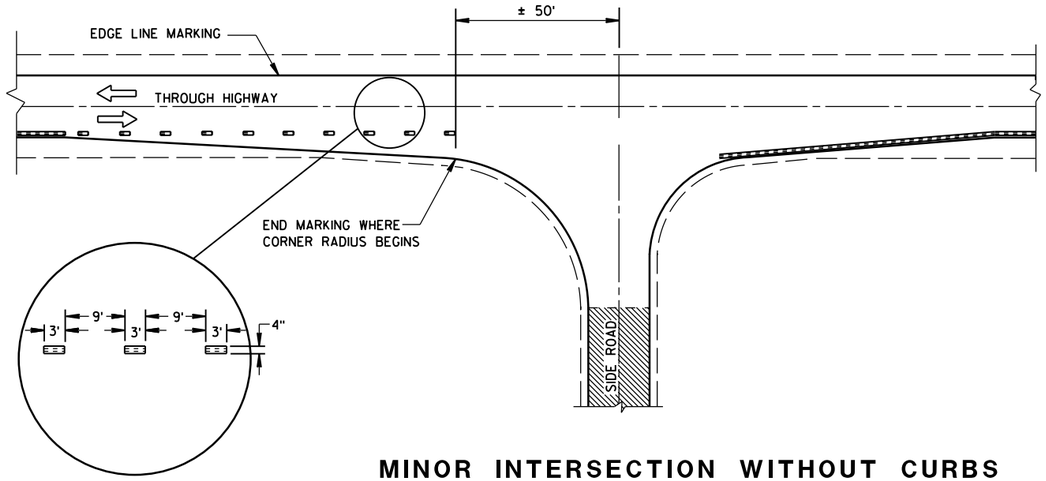

MINOR INTERSECTION WITHOUT CURBS

GENERAL NOTES

EDGE LINES SHALL BE OMITTED THROUGH INTERSECTIONS. EDGE LINES SHALL BE CONTINUED THROUGH DRIVEWAYS.

(1) WHEN DISTANCE "A" IS LESS THAN 250 FEET, OMIT LANE LINE.

(2) WHEN DISTANCE "B" IS LESS THAN 100 FEET, OMIT CHANNELIZING LANE LINE.

(3) ALTERNATIVE MARKING SHALL BE PROVIDED WHEN SPECIFIED IN THE CONTRACT. TYPICAL SITUATIONS WHERE THIS MARKING MAY BE REQUIRED ARE WHERE THE INTERSECTION IS ON A SHARP HORIZONTAL CURVE OR CREST VERTICAL CURVE IN AN UNLIGHTED AREA SUCH THAT THE EDGE LINE MAY BE MISLEADING TO THE MOTORIST OR DISAPPEAR FROM SIGHT.

(4) THE EDGE LINE IN THE TAPER AREAS OF THE BYPASS LANE AND THE BYPASS LANE SHALL BE LOCATED 1-FOOT FROM EDGE OF PAVEMENT TO THE OUTSIDE EDGE OF EDGE LINE.

(5) BARRIER LINE ENDS AT SIDE ROAD PAVEMENT/SURFACE EDGE EXTENSION.

(6) BARRIER LINE STARTS 500 FEET PRIOR TO THE BYPASS TAPER.

(7) IF THE DISTANCE BETWEEN 2 SUCCESSIVE NO-PASSING ZONES IS LESS THAN THE MINIMUM DISTANCE BETWEEN ZONES, CONNECT THE 2 ZONES.

(8) 3' LINE 9' GAP, EXCEPT RETRACE THE EXISTING LINE - GAP PATTERN WHERE EXISTING MARKINGS ARE IN PLACE.

ARROW SYMBOL (⇨) SHOWS DIRECTION OF TRAVEL

(7)

POSTED SPEED (MPH)	MINIMUM DISTANCE BETWEEN ZONES (FEET)
25 - 30	528
35 - 40	528
45 - 50	686
55	792

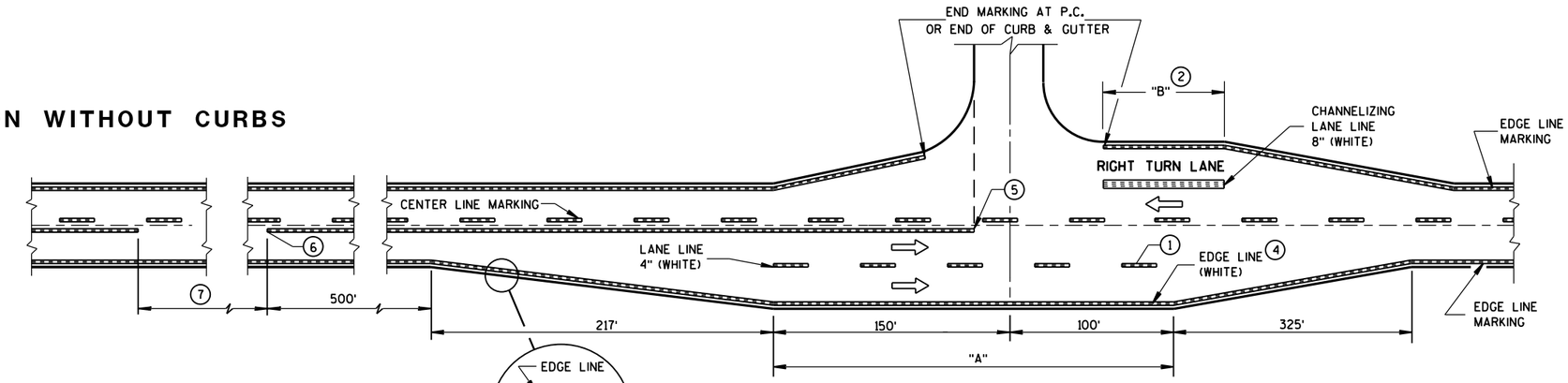

MAJOR INTERSECTIONS

(INTERSECTION WITH FULL RIGHT TURN LANE OR BYPASS LANES)

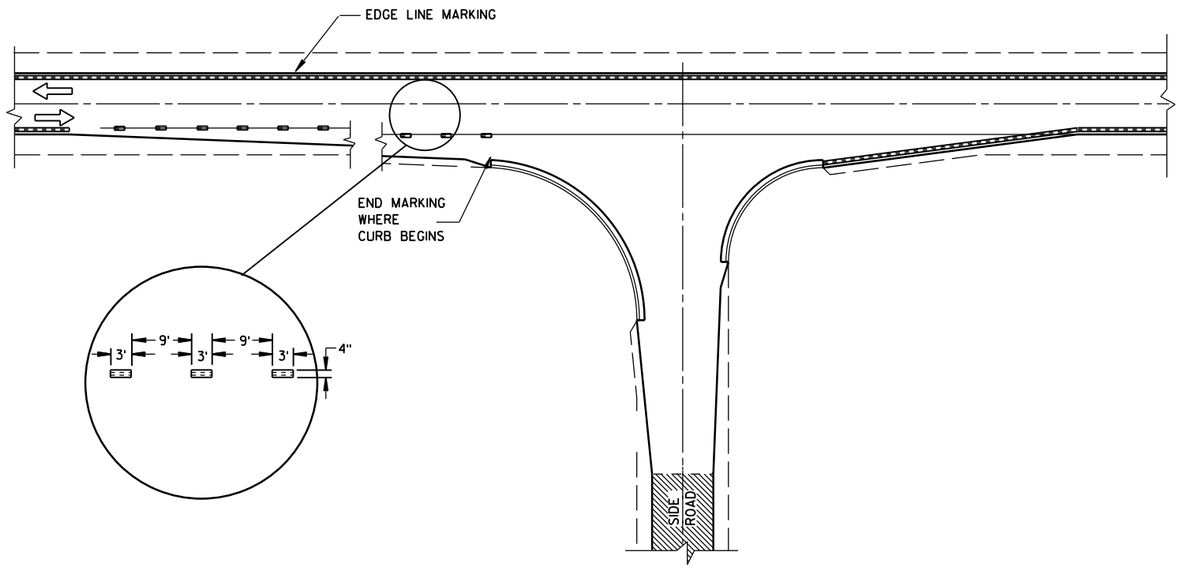

MINOR INTERSECTION WITH CURBS

(TYPICAL MARKING)

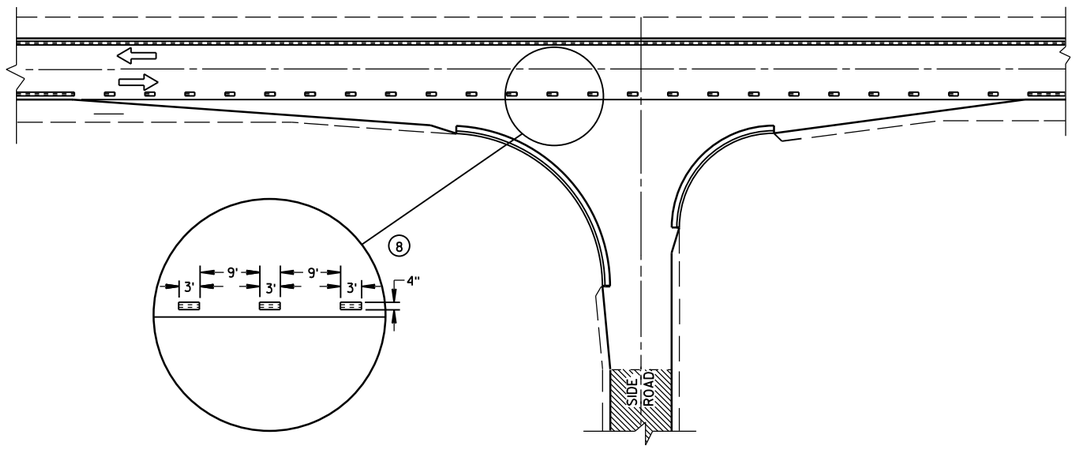

MINOR INTERSECTION WITH CURBS

(3) (FOR SPECIAL CONDITIONS AS SPECIFIED)

PAVEMENT MARKING
(INTERSECTIONS)

STATE OF WISCONSIN
DEPARTMENT OF TRANSPOI

6

S.D.D. 15 C 8-15b

6

S.D.D. 15 C 8-15b

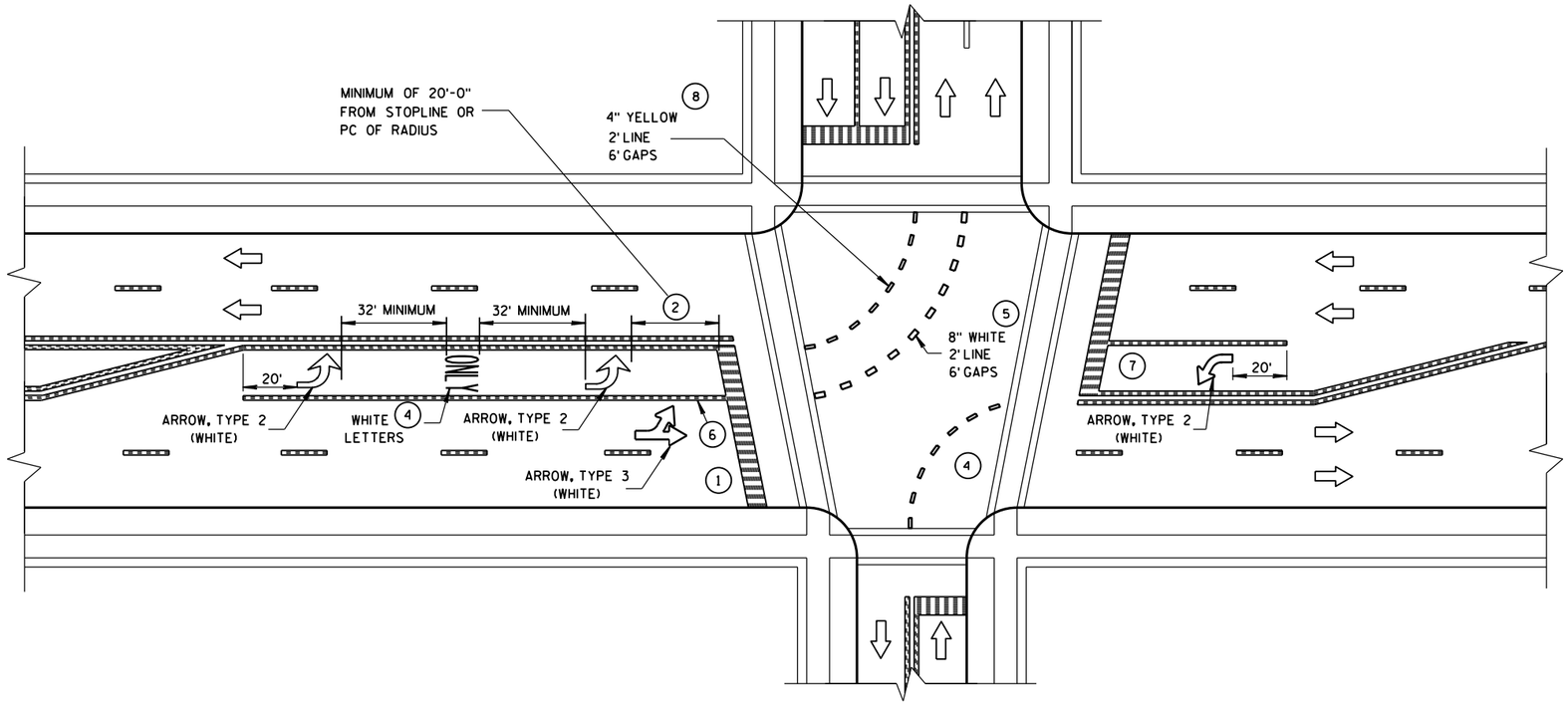

GENERAL NOTES

1. STOP BAR IS REQUIRED ONLY WHEN SPECIFIED IN THE CONTRACT.
2. DISTANCE MAY BE ADJUSTED TO ACCOMODATE SHORT LEFT TURN LANES. AS APPROVED BY THE ENGINEER.
3. A SET OF ARROWS IS REQUIRED EVERY 400' OR NEAR INTERSECTIONS OR DRIVEWAYS WITH TURNING TRAFFIC.
4. ADD EXTRA ARROW AND ONLY PER 160' OR WHEN ON A CURVE.
5. 8" WHITE WITH 2' LINE 6' GAPS FOR DUAL TURN LANE.
6. 8" WHITE
7. ADD SECOND ARROW WHEN TURN BAY IS GREATER THAN OR EQUAL TO 108'.
8. REQUIRED ONLY WHEN SPECIFIED IN THE CONTRACT.

NOTE:
ARROW SYMBOL (⇨)
SHOWS DIRECTION OF TRAVEL

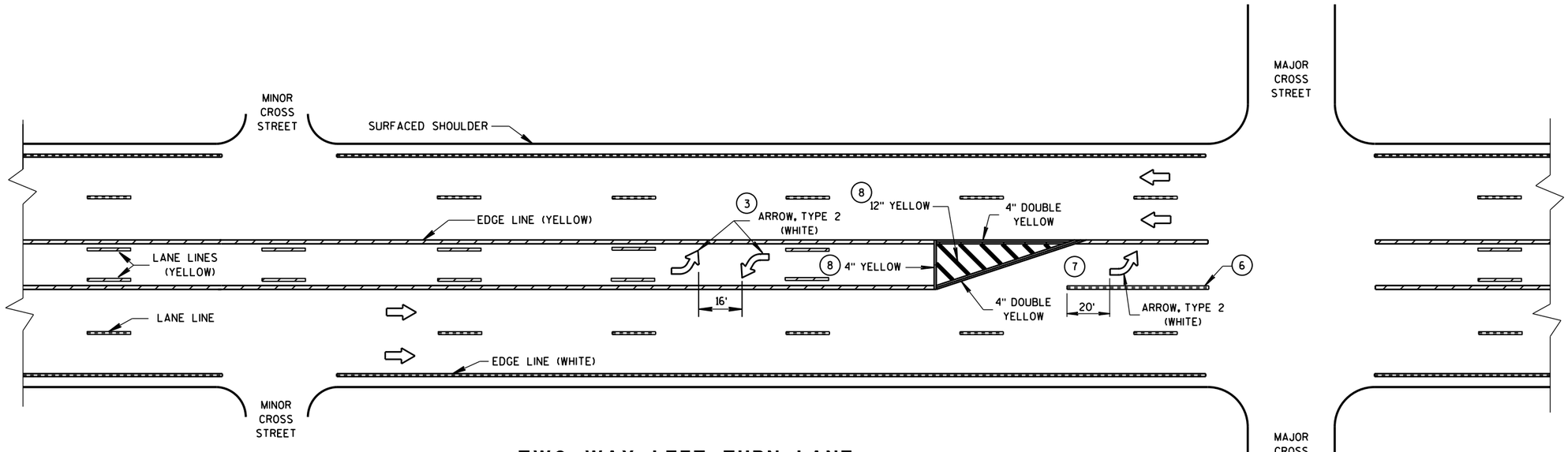

TWO WAY LEFT TURN LANE

PAVEMENT MARKING (LEFT TURN LANE)

STATE OF WISCONSIN
DEPARTMENT OF TRANSPOI

6

S.D.D. 15 C 8-15e

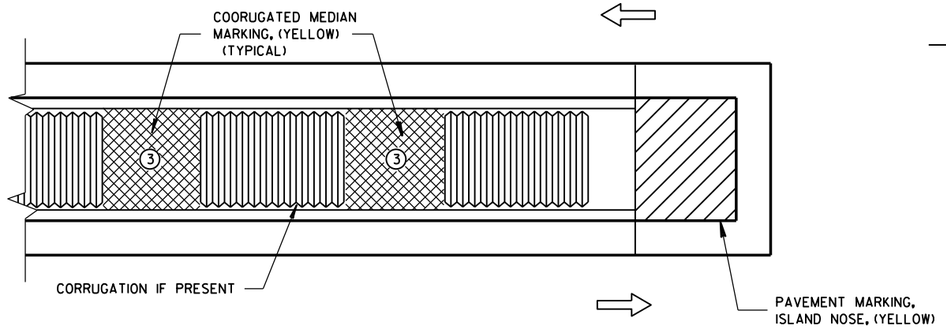

MEDIAN ISLAND WITH SQUARE BLUNT NOSE

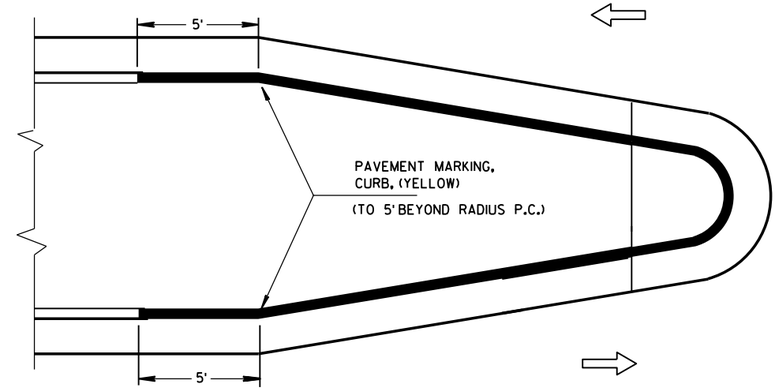

MEDIAN ISLAND WITH ROUND BLUNT NOSE

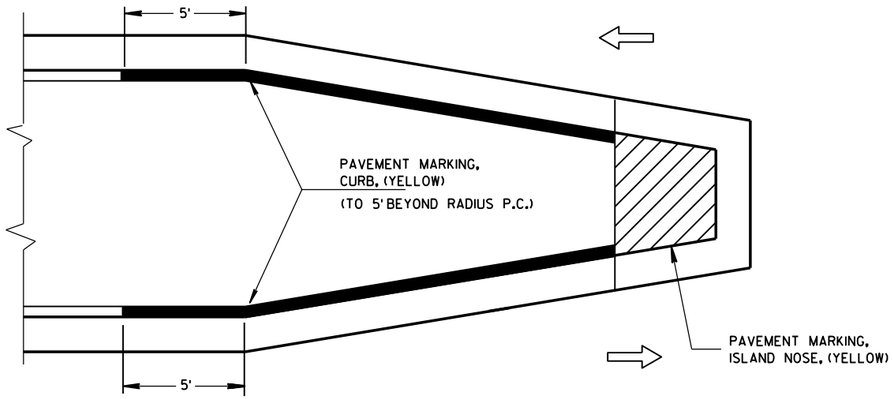

MEDIAN ISLAND WITH SLOPED NOSE

TYPICAL PLACEMENT OF PAVEMENT MARKING ON MEDIAN ISLANDS

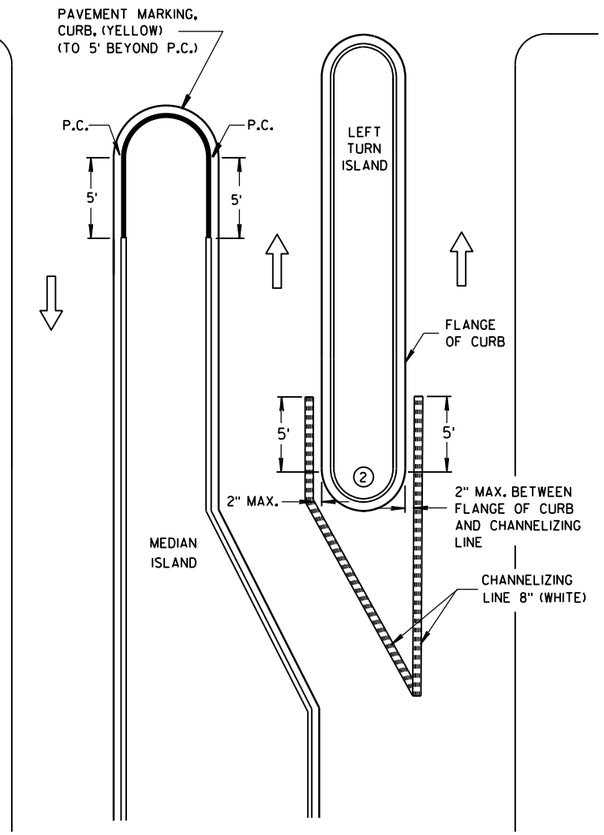

LEFT TURN & MEDIAN ISLAND

GENERAL NOTES

1. STOP LINE IS REQUIRED ONLY WHEN SPECIFIED IN THE CONTRACT.
2. DO NOT MARK CURB NOSES THAT SEPARATE LANES OF TRAFFIC TRAVELING IN THE SAME DIRECTION.
3. WHEN CONCRETE CORRUGATED MEDIAN IS CONSTRUCTED TO SEPARATE TRAFFIC OPERATING IN THE OPPOSING DIRECTION YELLOW PAVEMENT MARKING SHALL BE APPLIED TO THE FLAT PORTION OF THE CONCRETE CORRUGATED MEDIAN. THE ITEM OF PAVEMENT MARKING, CONCRETE CORRUGATED MEDIAN, WILL BE MEASURED IN PLACE AND AND ACCEPTED IN ACCORDANCE WITH THE CONTRACT AND PAID FOR AT THE CONTRACT UNIT PRICE PER SQUARE FOOT.

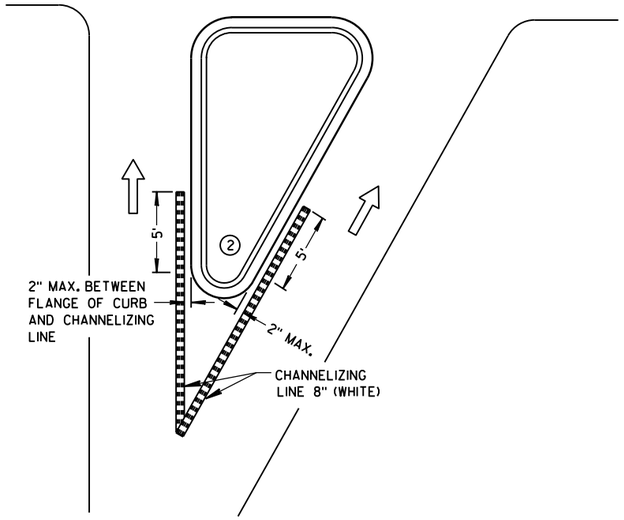

RIGHT TURN ISLAND

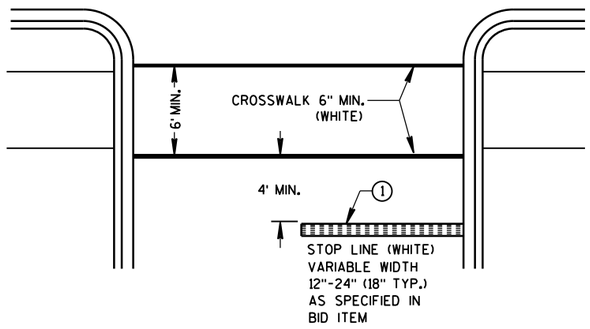

STOP LINE AND CROSSWALK

LEGEND

- ISLAND NOSE MARKING
- CURB MARKING
- CORRUGATED MEDIAN MARKING
- DIRECTION OF TRAVEL

PAVEMENT MARKING (ISLANDS, STOP LINE & CROSS WALK)

STATE OF WISCONSIN
DEPARTMENT OF TRANSPOI

6

S.D.D. 15 C 8-15f

6

S.D.D. 15 C 8-15f

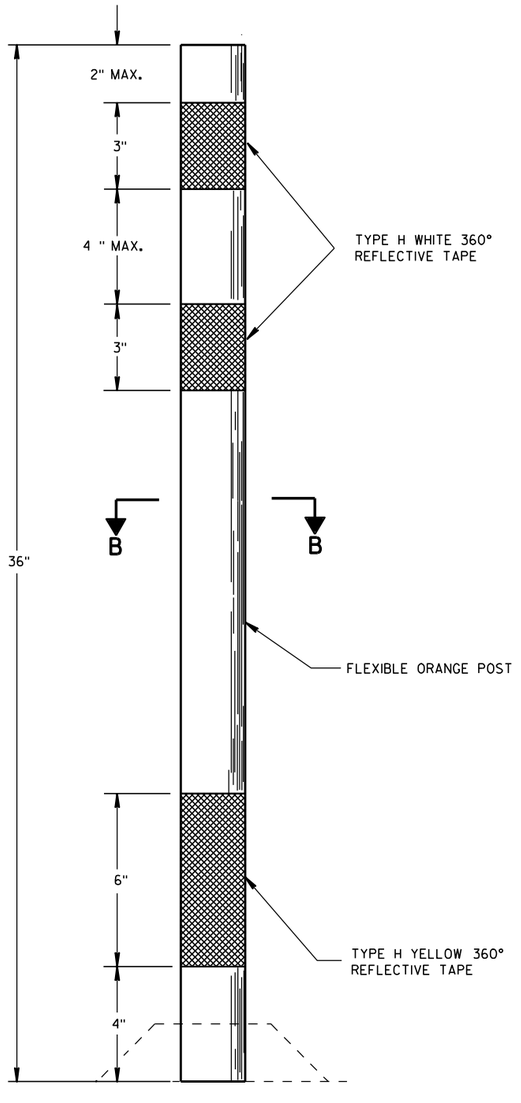

FLEXIBLE TUBULAR MARKER POST

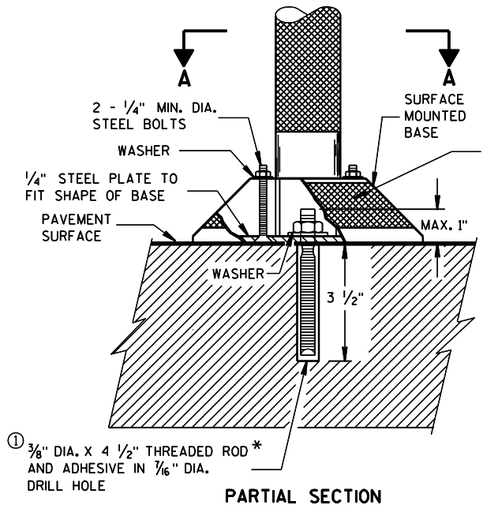

PARTIAL SECTION TO SHOW BOLTS

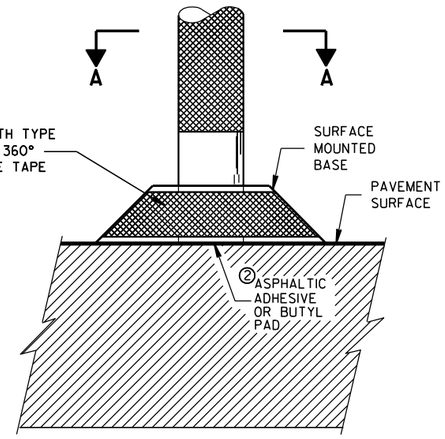

POST BASES ON NEW OR EXISTING PAVEMENT

GENERAL NOTES

DETAILS OF CONSTRUCTION NOT SHOWN ON THIS DRAWING SHALL CONFORM TO THE PERTINENT REQUIREMENTS OF THE STANDARD SPECIFICATIONS AND APPLICABLE SPECIAL PROVISIONS.

SURFACE MOUNTED BASES SHALL BE FURNISHED IN ACCORDANCE WITH MANUFACTURERS RECOMMENDATIONS TO BE COMPATIBLE WITH FLEXIBLE TUBULAR MARKER POSTS TO A SIZE AND SHAPE THAT WILL PROVIDE A STABLE POST FOUNDATION WHEN SECURED TO THE PAVEMENT.

① THREADED ROD SHALL BE MACHINED DOWN TO 0.280 INCH DIA. 1 1/4 INCHES FROM THE TOP.

② THE ASPHALTIC ADHESIVE OR BUTYL PAD FURNISHED SHALL BE IN ACCORDANCE WITH MANUFACTURERS RECOMMENDATIONS.

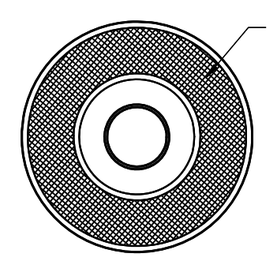

SECTION A-A

SURFACE MOUNTED BASE

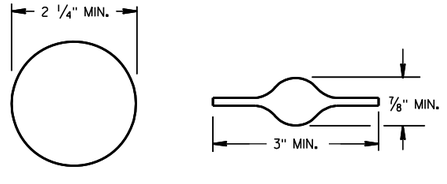

SECTION B-B

ALTERNATIVE SHAPES

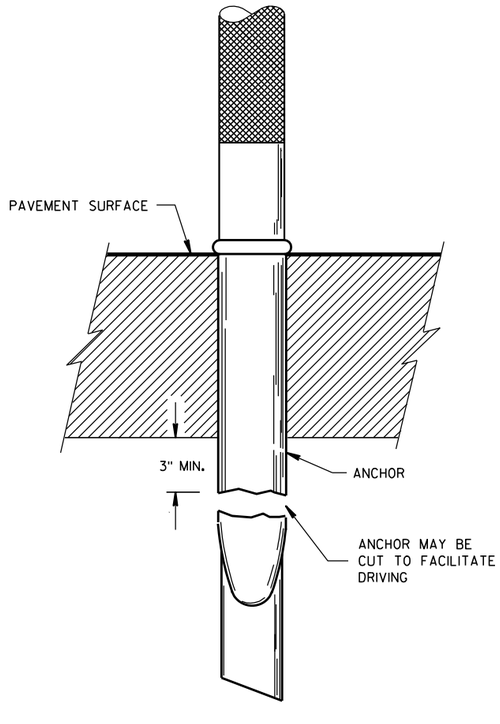

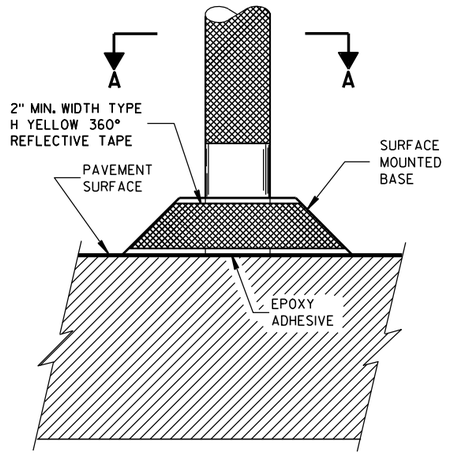

POST ANCHOR AND BASE ON PAVEMENT WHICH WILL BE REMOVED

FLEXIBLE TUBULAR MARKER POST, ANCHOR & BASES

STATE OF WISCONSIN
DEPARTMENT OF TRANSPORTATION

APPROVED

2/17/94 DATE

/S/ Chester J. [illegible] DIRECTOR, OFFICE O

FHWA

6

S.D.D. 15 C 11-5

6

S.D.D. 15 C 11-5

TWO-LANE ROADWAY

SYMBOLS

WORK AREA

FLAGGER, EQUIPPED WITH STOP/SLOW PADDLE FASTENED ON SUPPORT STAFF

SIGN ON PORTABLE OR PERMANENT SUPPORT

W3-4

USE OF THE "BE PREPARED TO STOP" SIGN IS OPTIONAL. WHEN USED, THIS SIGN SHALL BE LOCATED BETWEEN THE W20-7a AND W20-4 SIGNS. A 500' TYPICAL SPACING SHALL BE PROVIDED BETWEEN THE SIGNS.

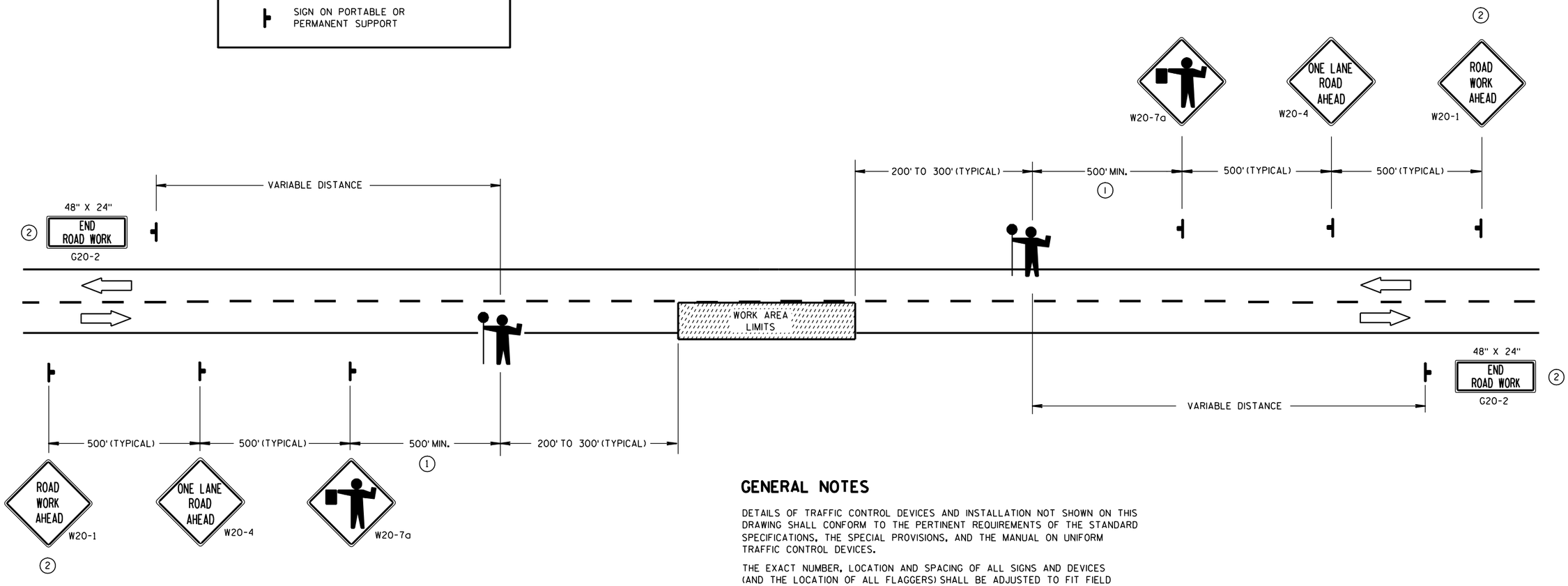

(1) FOR A MOVING WORK OPERATION,
SIGNING FOR BOTH DIRECTIONS SHALL BE REESTABLISHED (AS SIMULTANEOUSLY AS PRACTICAL) AT APPROXIMATELY 3500 FOOT INTERVALS IN THE MOVING WORK OPERATION OR AS APPROVED BY THE ENGINEER.

(2) SIGN NOT REQUIRED IF FLAGGING OPERATION OCCURS WITHIN A SIGNED ROAD WORK ZONE AREA.

GENERAL NOTES

DETAILS OF TRAFFIC CONTROL DEVICES AND INSTALLATION NOT SHOWN ON THIS DRAWING SHALL CONFORM TO THE PERTINENT REQUIREMENTS OF THE STANDARD SPECIFICATIONS, THE SPECIAL PROVISIONS, AND THE MANUAL ON UNIFORM TRAFFIC CONTROL DEVICES.

THE EXACT NUMBER, LOCATION AND SPACING OF ALL SIGNS AND DEVICES (AND THE LOCATION OF ALL FLAGGERS) SHALL BE ADJUSTED TO FIT FIELD CONDITIONS AS APPROVED BY THE ENGINEER.

THE FIRST ADVANCE WARNING SIGN SHOULD TYPICALLY BE LOCATED IN ADVANCE OF THE ANTICIPATED TRAFFIC BACKUP OR QUEUE.

WHEN A SIDE ROAD OR RAMP INTERSECTS THE FACILITY ON WHICH THE WORK IS BEING PERFORMED, ADDITIONAL TRAFFIC CONTROLS SHALL BE PROVIDED AS SPECIFIED IN THE PLANS AND/OR THE SPECIAL PROVISIONS OR AS APPROVED BY THE ENGINEER.

FLAGGERS SHALL BE IN SIGHT OF EACH OTHER OR IN DIRECT COMMUNICATION AT ALL TIMES. THEY SHALL BE EQUIPPED WITH STOP/SLOW PADDLES FASTENED ON SUPPORT STAFFS. WHEN THE FLAGGING OPERATION IS NOT IN EFFECT, THE "FLAGGER AHEAD", THE "ROAD WORK AHEAD" AND THE ONE LANE ROAD AHEAD" SIGNS SHALL BE COVERED OR REMOVED AND THE HIGHWAY RESTORED TO NORMAL OPERATION.

ALL SIGNS ARE 48" X 48" UNLESS OTHERWISE NOTED.

TRAFFIC CONTROL FOR LANE CLOSURE (SUITABLE FOR MOVING OPERATIONS)

STATE OF WISCONSIN
DEPARTMENT OF TRANSPORTATION

APPROVED

9/5/06 — DATE

/S/ Thomas N. Nathaam — STATE TRAFFIC ENGINEER

FHWA

6

S.D.D. 15 C 12-3

GENERAL NOTES

SIGNING AND MARKING IS SHOWN AS TYPICAL PLACEMENT. FIELD CONDITIONS MAY DICTATE CHANGES IN SIGNING AND MARKING PLACEMENT.

A DISTANCE DEPENDENT ON SPEED (SEE TABLE)

(1) WRONG WAY PREVENTION SIGNS ARE DISCUSSED IN T G M 2-15-12

SYMBOLS

- ✳ OPTIONAL SIGNS
- ✳✳ SIGNS MAY BE OMITTED IF SPACE DOES NOT PERMIT
- ✳✳✳ IF POSTED SPEED 45 MPH OR GREATER, PLACE W5-54 SIGN UNDER R4-7 SIGN. MOUNT W5-54 SIGN AT 4' MOUNTING HEIGHT (TOP OF ROADWAY TO BOTTOM OF SIGN)
- POST MOUNTED SIGN
- DIRECTION OF TRAFFIC FLOW

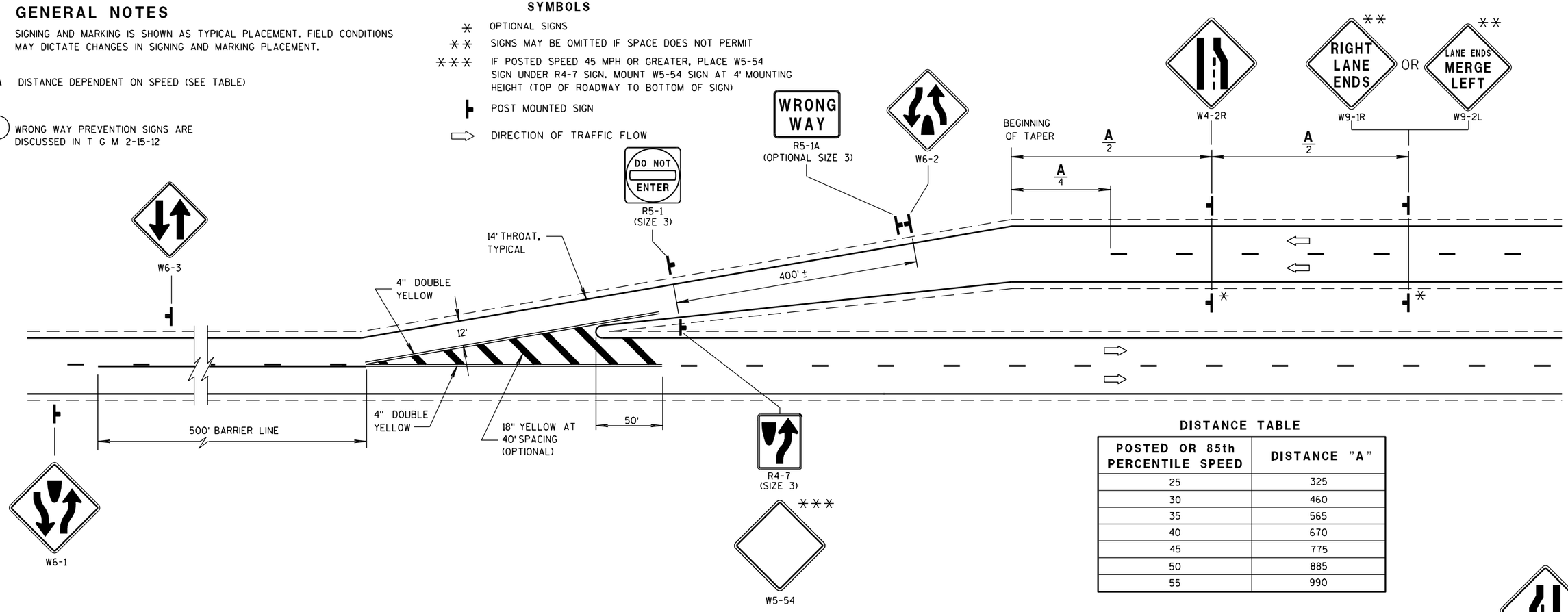

DISTANCE TABLE

POSTED OR 85th PERCENTILE SPEED	DISTANCE "A"
25	325
30	460
35	565
40	670
45	775
50	885
55	990

USE W4-2L IF :

(1) THE LEFT LANE IS PUSHED TO THE RIGHT:

OR

(2) THERE IS A VERY PROMINENT CONSTRUCTION JOINT ENDING THE LEFT LANE.

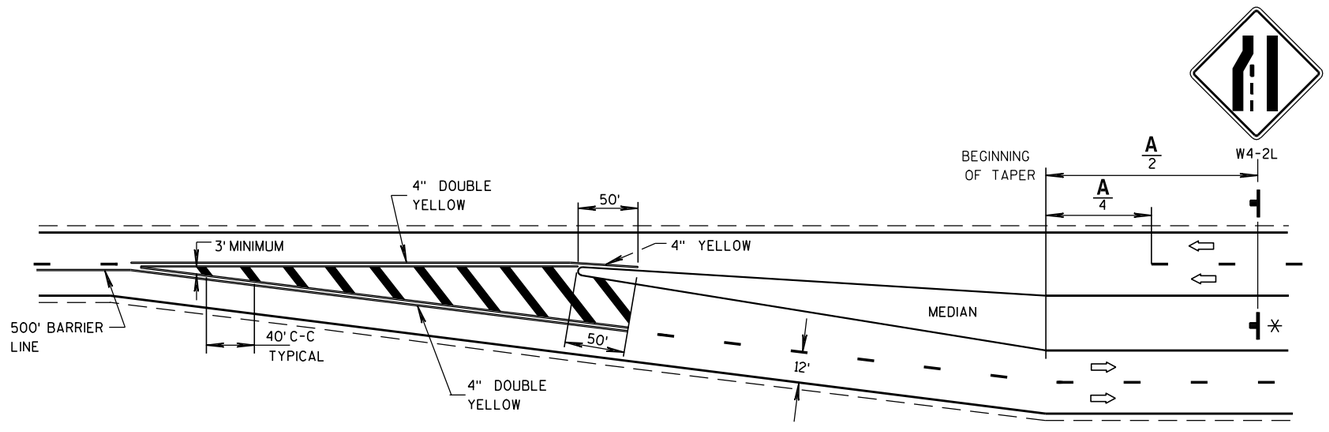

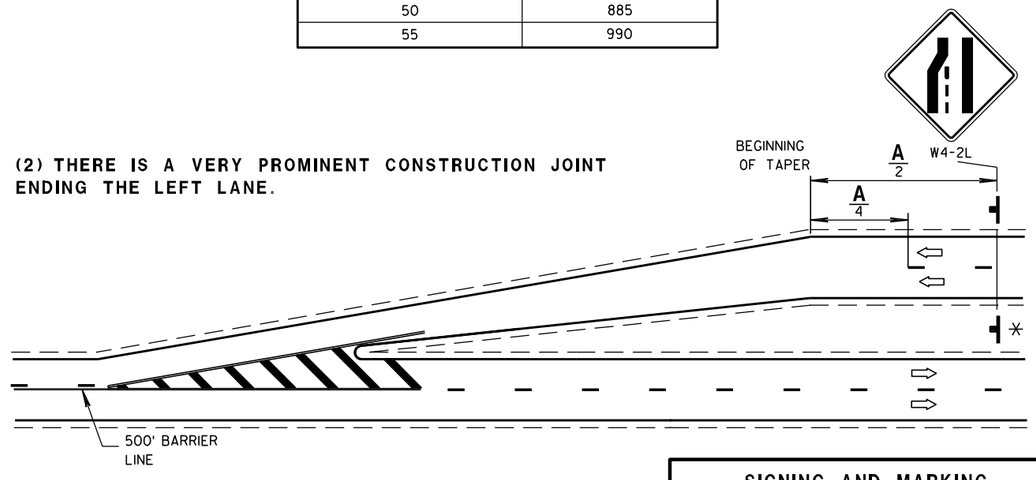

SIGNING AND MARKING
TWO LANE TO FOUR LANE
DIVIDED TRANSITIONS

STATE OF WISCONSIN
DEPARTMENT OF TRANSPORTATION

APPROVED
8/27/2011 — DATE
/S/ Thomas N. Notbohm — STATE TRAFFIC ENGINEER
FHWA

6
S.D.D. 15 C 21-4

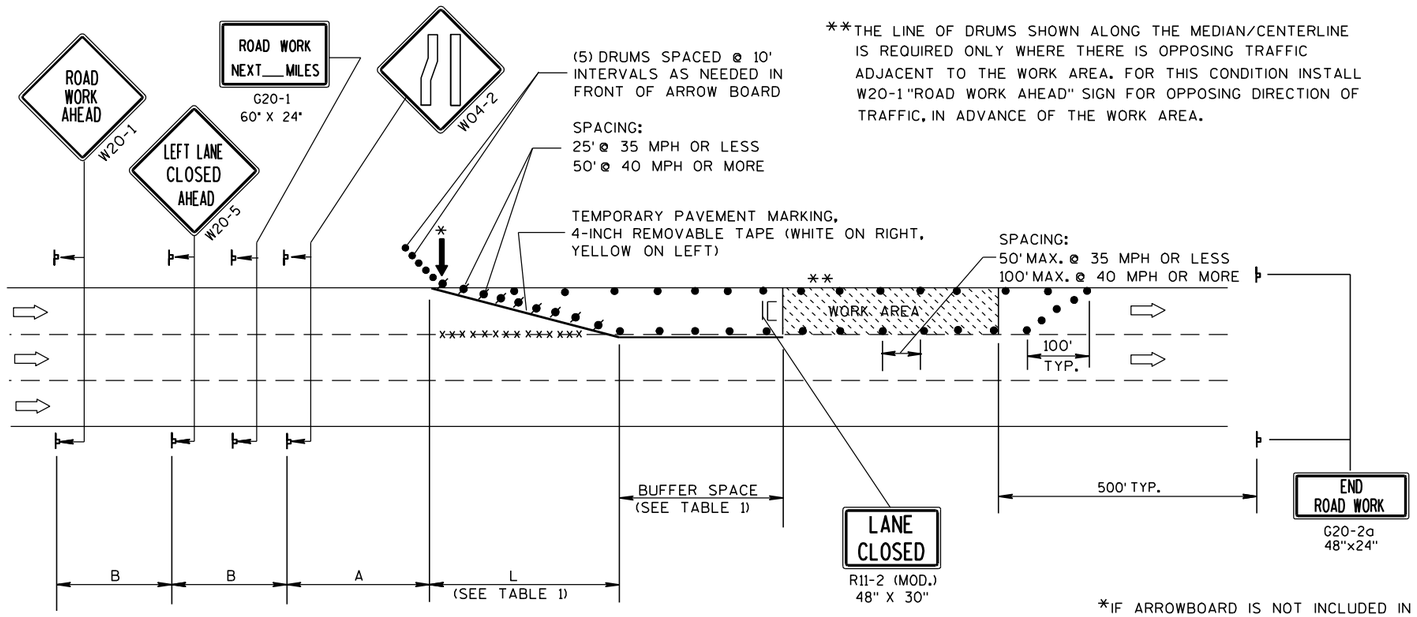

**THE LINE OF DRUMS SHOWN ALONG THE MEDIAN/CENTERLINE IS REQUIRED ONLY WHERE THERE IS OPPOSING TRAFFIC ADJACENT TO THE WORK AREA. FOR THIS CONDITION INSTALL W20-1 "ROAD WORK AHEAD" SIGN FOR OPPOSING DIRECTION OF TRAFFIC, IN ADVANCE OF THE WORK AREA.

B=400' AT 25-30 MPH
700' AT 35-40 MPH
1000' AT 45-55 MPH

A=200' AT 25-30 MPH
350' AT 35-40 MPH
500' AT 45-55 MPH

(PLACE BARRICADE AND SIGN APPROX. EVERY 1000' ACROSS THE CLOSED LANE)

*IF ARROWBOARD IS NOT INCLUDED IN MISCELLANEOUS QUANTITIES, SUBSTITUTE A TYPE III BARRICADE WITH W01-6 SIGN IN THE LANE CLOSURE TAPER.

W01-6
48"x24"

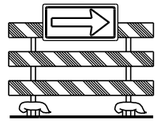

TABLE 1
TAPER AND BUFFER SPACE FOR 12' LANE WIDTH

S	L	BUFFER SPACE
25	125'	55'
30	180'	85'
35	245'	120'
40	320'	170'
45	540'	220'
50	600'	280'
55	660'	335'

FOR LANE WIDTH OTHER THAN 12':

L = WS AT 45 MPH OR GREATER

$L = \frac{WS^2}{60}$ AT 40 MPH OR LESS

L = TAPER LENGTH IN FEET

S = NON-CONSTRUCTION SPEED LIMIT (MPH)

W = WIDTH OF LANE CLOSURE

LEGEND

- DRUM WITH/WITHOUT WARNING LIGHT, TYPE C (STEADY-BURN)
- POST MOUNTED SIGN
- ARROW BOARD
- TYPE III BARRICADE (8' EQUIVALENT) AND WARNING LIGHTS, TYPE A (FLASHING) WITH/WITHOUT SIGN
- DIRECTION OF TRAFFIC FLOW
- xxxx REMOVING PAVEMENT MARKING (SEE GENERAL NOTES)

GENERAL NOTES

THIS LANE CLOSURE DETAIL IS TYPICAL FOR CLOSING THE LEFT LANE. FOR A RIGHT LANE CLOSURE, REVERSE THE TRAFFIC CONTROL.

THIS DETAIL MAY BE USED FOR ROADWAYS WITH EITHER TWO OR THREE LANES IN EACH DIRECTION.

THE EXACT NUMBER, LOCATION, AND SPACING OF ALL SIGNS AND DEVICES SHALL BE ADJUSTED TO FIT FIELD CONDITIONS AS APPROVED BY THE ENGINEER.

THE SPACING BETWEEN TRAFFIC CONTROL SIGNS SHOULD BE ADJUSTED TO NOT CONFLICT WITH AND SHOULD PROVIDE A DESIRABLE MINIMUM OF 200 FEET CLEARANCE TO EXISTING SIGNS THAT WILL REMAIN IN PLACE.

ALL SIGNS ARE 48"x48" UNLESS OTHERWISE NOTED. IF NECESSARY DUE TO SPACE CONSTRAINTS IN URBAN AREAS, 36" X 36" SIGNS MAY BE USED IF APPROVED BY DISTRICT TRAFFIC UNIT.

"WO" SIGNS ARE THE SAME AS "W" SIGNS EXCEPT THE BACKGROUND IS ORANGE.

SIGNS THAT WILL BE IN PLACE LESS THAN 7 CONTINUOUS DAYS AND NIGHTS, OR THAT WILL BE PLACED IN A CLOSED LANE, MAY BE MOUNTED ON PORTABLE SUPPORTS.

ANY SIGNS TEMPORARY OR EXISTING, WHICH CONFLICT WITH TRAFFIC CONTROL "IN USE" SHALL BE REMOVED OR COVERED AS NEEDED AND AS APPROVED BY THE ENGINEER.

REMOVE PAVEMENT MARKINGS AND PLACE TEMPORARY PAVEMENT MARKING, REMOVABLE TAPE IF LANE CLOSURE IS TO BE IN PLACE FOR 7 OR MORE CONTINUOUS DAYS AND NIGHTS.

ON UNDIVIDED ROADWAYS, OMIT THE SIGNS SHOWN ON LEFT SIDE OF ROAD.

W20-1, G20-1 AND G20-2A SIGNS ARE NOT REQUIRED IF THE LANE CLOSURE IS WITHIN A LARGER WORK ZONE WHERE THESE SIGNS ARE ALREADY PRESENT.

OMIT G20-1 SIGNS IF LENGTH OF WORK AREA IS 2 MILES OR LESS.

CONSIDER GEOMETRICS WHEN LOCATING SIGNS AND ARROWBOARDS SO THE APPROACHING DRIVER HAS A CLEAR VIEW OF THE ARROWBOARDS AND LANE CLOSURE DRUMS.

PLACE THE ARROWBOARD AS CLOSE AS POSSIBLE TO THE BEGINNING OF THE LANE CLOSURE TAPER, PREFERABLY ON THE SHOULDER OR TERRACE.

CHANNELIZING DEVICES PLACED ADJACENT TO WORK AREA SHALL BE PULLED BACK FROM THE TRAVEL LANE WHEN WORK IS NOT IN PROGRESS.

BARRICADES IN A CLOSED LANE THAT MUST BE MOVED FOR A WORK OPERATION SHALL BE IMMEDIATELY RE-ESTABLISHED UPON COMPLETION OF THE OPERATION OR, FOR CONTINUING OPERATIONS, AT THE END OF EACH WORKING DAY.

WARNING LIGHTS ARE NOT REQUIRED IF THE LANE CLOSURE IS A DAYTIME ONLY OPERATION.

TRAFFIC CONTROL, SINGLE LANE CLOSURE, NON-FREEWAY/EXPRESSWAY

STATE OF WISCONSIN
DEPARTMENT OF TRANSPORTATION

APPROVED
5/23/00 DATE
/S/ Chester J. [illegible]
CHIEF SIGNS AND MARK[illegible] ENGINEER
FHWA

6

S.D.D. 15 D 20-1

NOTES

1. All Signs Type II - Type H Reflective - reference WIS DOT Standard Specification for HIGHWAY and STRUCTURE CONSTRUCTION latest edition.
2. Color:
   Background - Green except as noted
   Message - White
3. Message Series - E except as noted

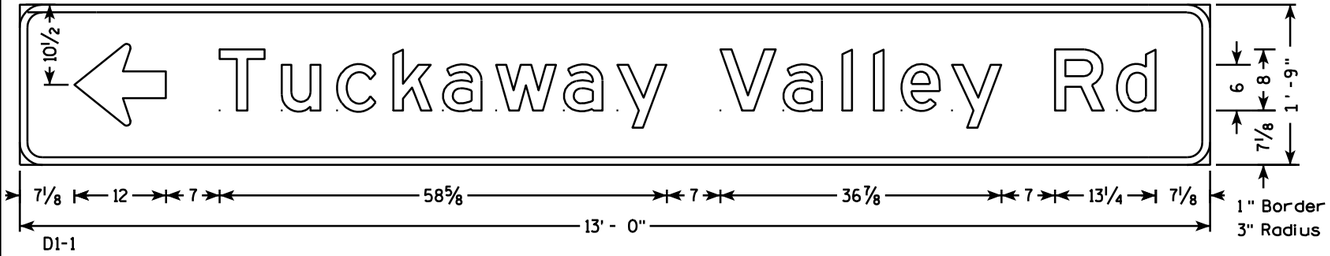

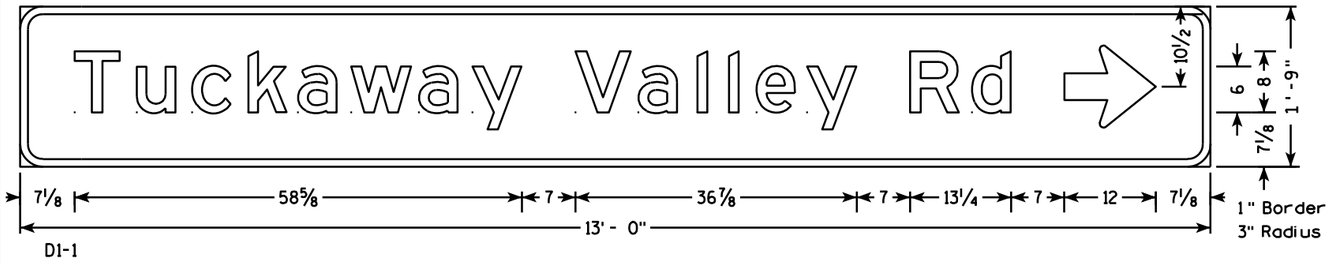

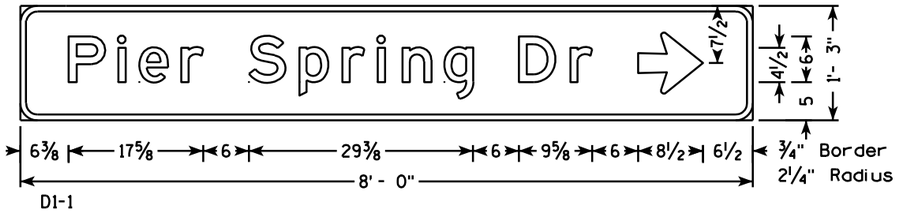

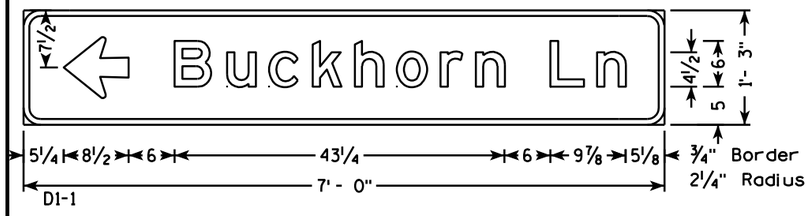

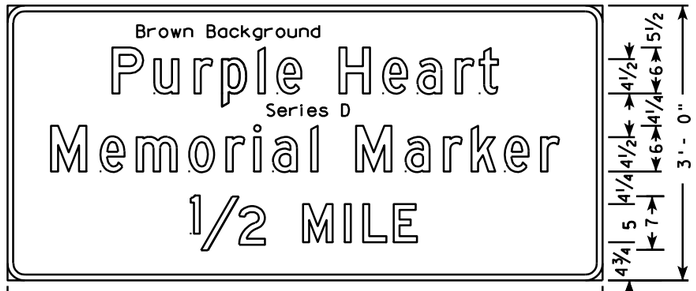

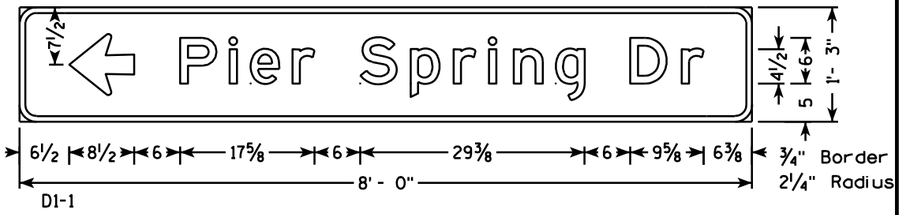

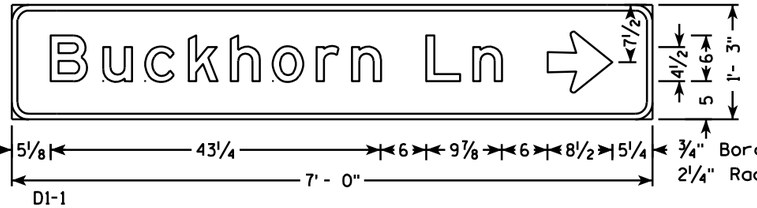

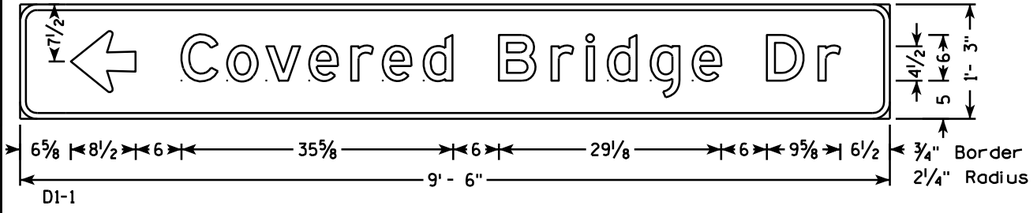

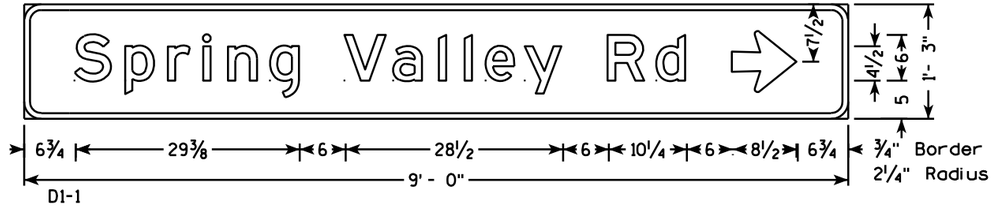

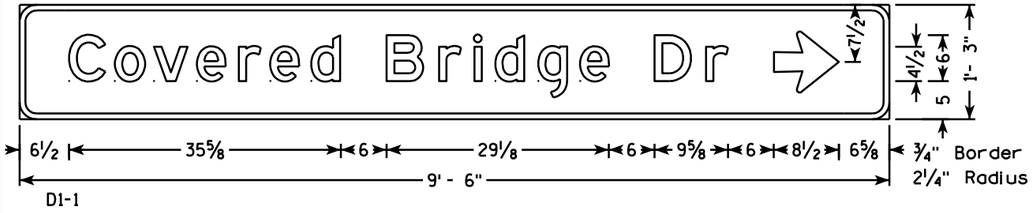

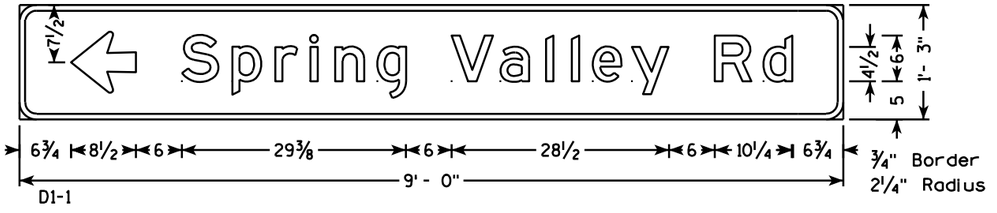

7

7

PROJECT NO: 1643-05-75	HWY: USH 14	COUNTY: RICHLAND	PERMANENT SIGNING	SHEET NO: 133	E

FILE NAME : C:\Users\PROJECTS\tr_d5\5522d611.dgn PLOT DATE : 13-JUN-2011 15:09 PLOT BY : mscj9h PLOT NAME : PLOT SCALE : 19.863478:1.000000

TYPICAL ASSEMBLIES

J1-1

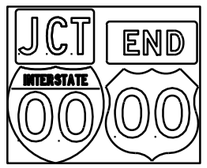

J1-2

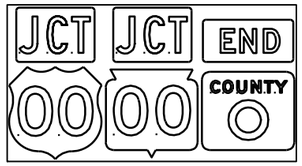

J1-3

J2-1

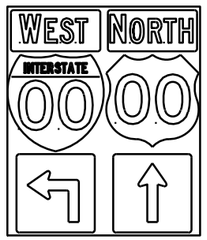

J2-2

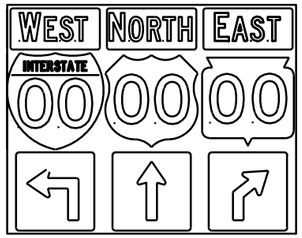

J2-3

JV

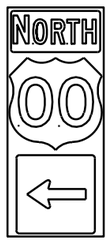

J3-1

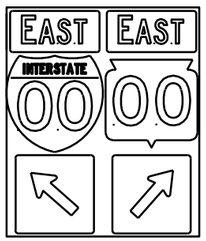

J3-2

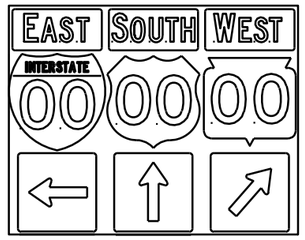

J3-3

J4-1

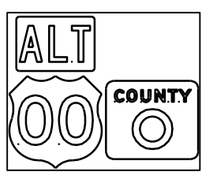

J4-2

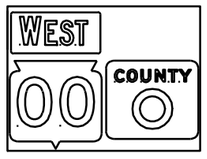

J4-2

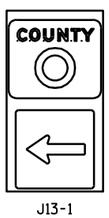

J13-1

J12-1

J32-1

J33-1

J23-1

J22-1

NOTES

1. Signs are Type II - Type H Reflective - reference WIS DOT Standard Specification for HIGHWAY and STRUCTURE CONSTRUCTION latest edition.
2. Color:
   Background - Black Non-reflective
   Message - see Note 5
3. Message Series - See Note 5
4. Corners shall be square since base material is plywood.
5. The colors and message spacing on each marker shall be according to the applicable route marker panel specifications.
6. Certain marker heads require the component pieces to be the same color. As an example, all the components used with an M1-1 Interstate marker shall be blue.
7. Single panel j-assemblies shall only be used with route marker shields that are same size. If the route marker shields are different size use multiple piece component.
8. Route assemblies that have 24 inch route shields and have dimensions greater than 48 inches (both vertical and horizontal) shall have one horizontal splice between the arrows and route shields. Vertical splices shall not be used on route assemblies with a horizontal dimension of 144 inches or less. The contractor shall not use more than one vertical joint per sign and the joint shall be between route shields.
9. Route assemblies that have 36 inch shields and have dimensions greater than 48 inchs (both vertical and horizontal) shall have two horizontal splices. One horizontal splice shall be between the cardinal direction and route shields and the other horizontal splice shall be between the arrows and route shields. Vertical splices shall not be used on route assemblies with a horizontal dimension of 144 or less. The contractor shall not use more than one vertical joint per sign and the joint shall be between route shields.

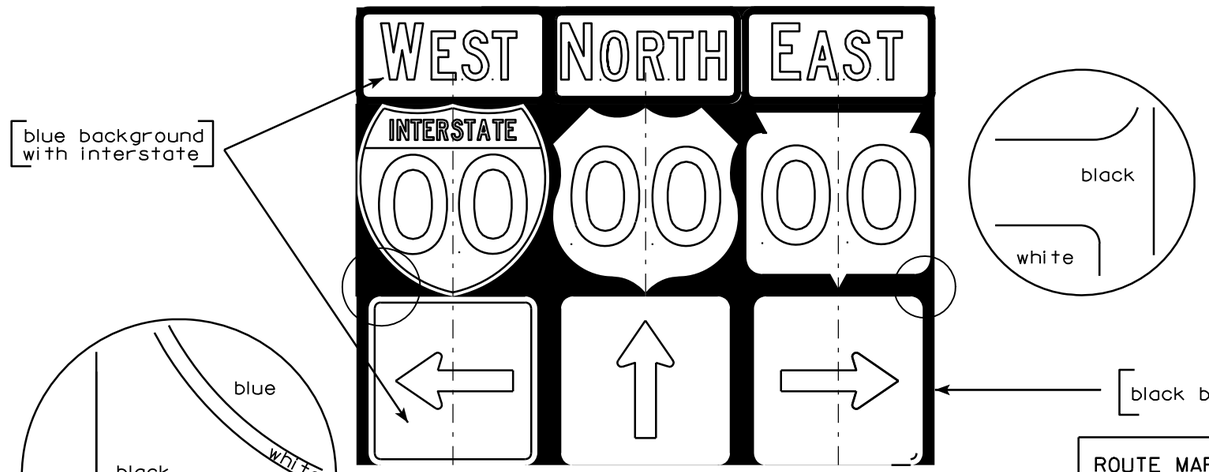

ROUTE MARKERS & COMPONENTS IN TYPICAL ASSEMBLIES

WISCONSIN DEPT OF TRANSPORTATION

APPROVED Matthew R Rauch
for State Traffic Engineer

DATE 10/21/09 PLATE NO. A2-1S.6

7

7

PROJECT NO:

SHEET NO: 134 E

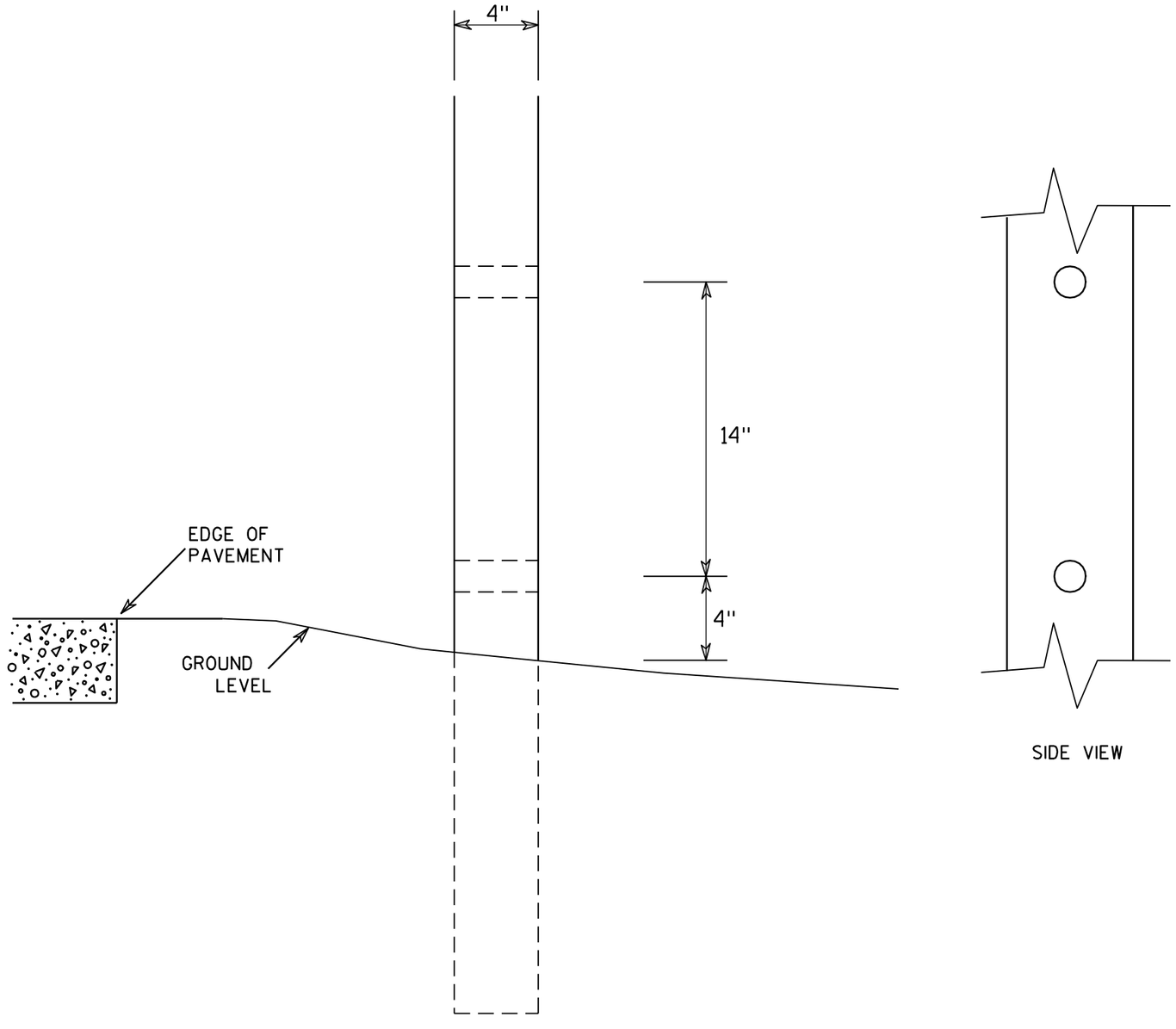

SIDE VIEW

GENERAL NOTES

1. All 4 x 6 Wood Posts shall be modified by having two 1½" diameter holes drilled perpendicular to the roadway centerline.

7

7

4 X 6 WOOD POST MODIFICATIONS

WISCONSIN DEPT OF TRANSPORTATION

APPROVED Chester J Spang for State Traffic Engineer

DATE 3/27/97 PLATE NO. A4-11.2

PROJECT NO:	HWY:	COUNTY:		SHEET NO: 135	E

URBAN AREA

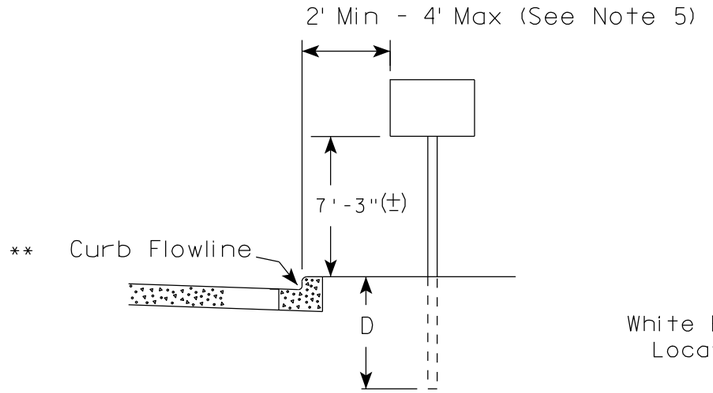

RURAL AREA (See Note 2)

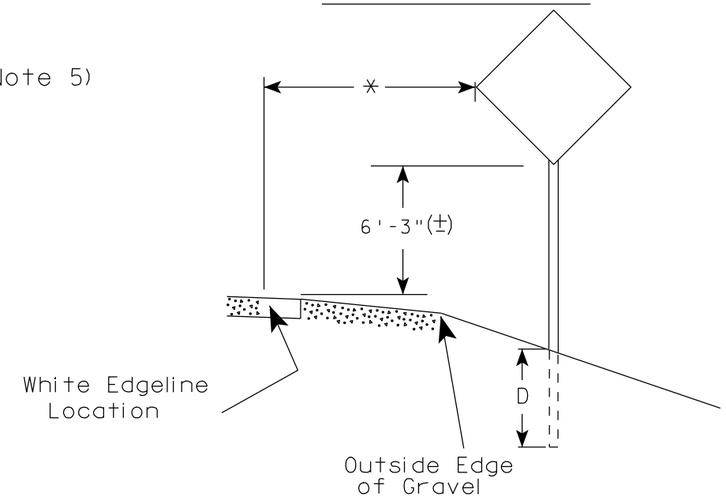

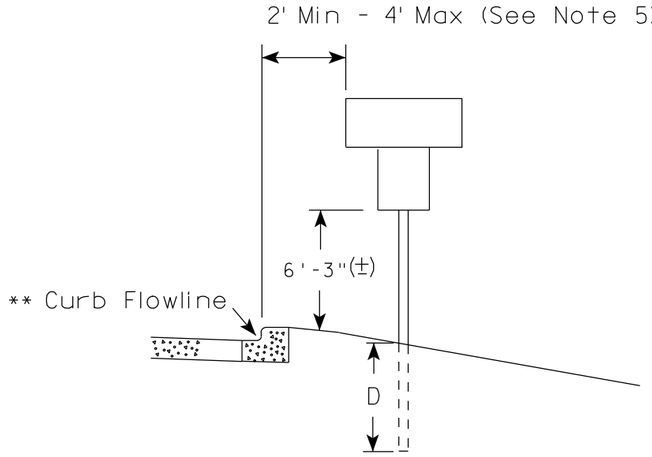

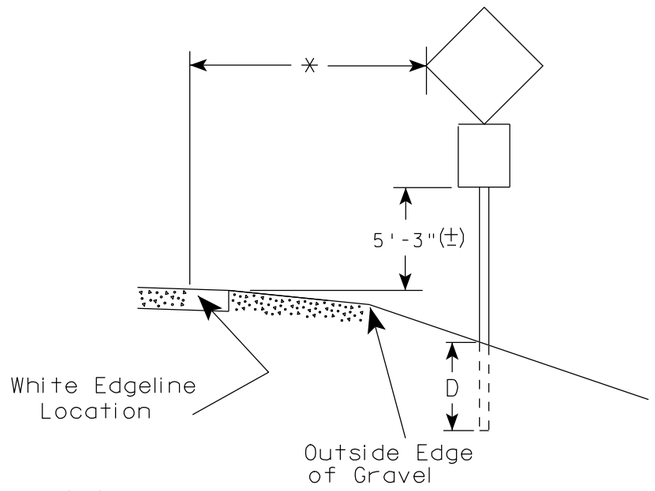

** The existence of curb and gutter does not in itself mandate the vertical clearance illustrated. That height is typically measured where there is sidewalk adjacent to the roadway or parking is permitted. In the absence of sidewalk vertical clearance is measured from the top of the curb. Offset of signs is measured from the flow line.

* 6 feet from edge of a paved shoulder or 12 feet from the edge of pavement (edge line location) or 2 feet from outside edge of gravel, whichever is greater unless directed by project engineer.

GENERAL NOTES

1. Signs wider than 4 feet or larger than 20 sq. ft. shall be mounted on multiple posts. Refer to plate A4-4.
2. If signs are mounted on barrier wall, see A4-10 sign plate.
3. For expressways and freeways, mounting height is 7'- 3" (±) or 6'-3" (±) depending upon existence of a sub-sign.
4. Minimum mounting height for J assemblies (A4-5) is 7'-3" (±) or 6'-3" (±) per urban or rural detail respectively.
5. Minimum mounting height for signs mounted on traffic signal poles is 5'- 3" (±).
6. Offset distance shall be consistent with existing signs or consistent throughout length of project.
7. The (±) tolerance for mounting height is 3 inches.
8. Folding stop signs (R1-1F) shall be mounted at a height of 5'-3" (±) or as directed by the Engineer.
9. The Double Arrow sign (W12-1) shall be mounted at a height of 2'-3" (±). The Chevron sign (W1-8), Roundabout Chevron panel (R6-4B), Clearance Markers (W5-52), Mile Markers (D10 series) & End of Road Markers (W5-56 & W5-56A) shall be mounted at a height of 4'-3" (±).

POST EMBEDMENT DEPTH

Area of Sign Installation (Sq. Ft.)	D (Min)
20 or Less	4'
Greater than 20	5'

TYPICAL INSTALLATION OF PERMANENT TYPE II SIGNS ON SINGLE POSTS

WISCONSIN DEPT OF TRANSPORTATION

APPROVED Matthew R Rauch for State Traffic Engineer

DATE 9/21/2011 PLATE NO. A4-3.16

7

7

PROJECT NO: | HWY: | COUNTY: | SHEET NO: 136 | E

URBAN AREA

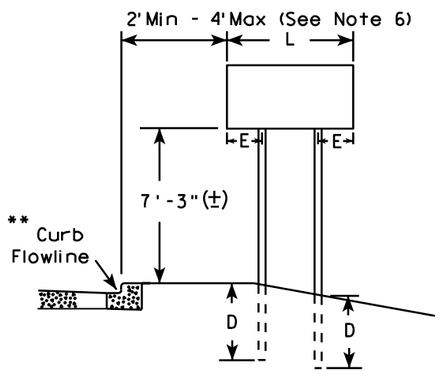

RURAL AREA (See Note 3)

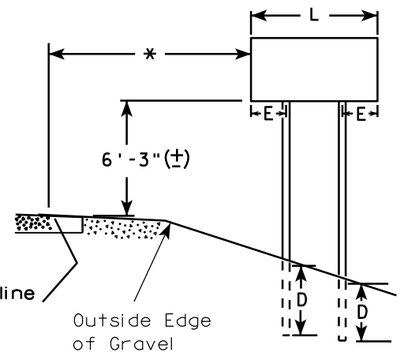

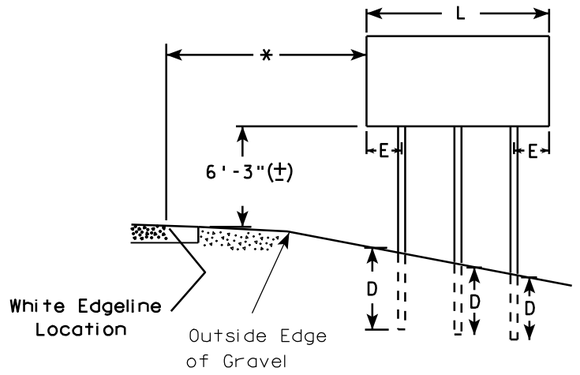

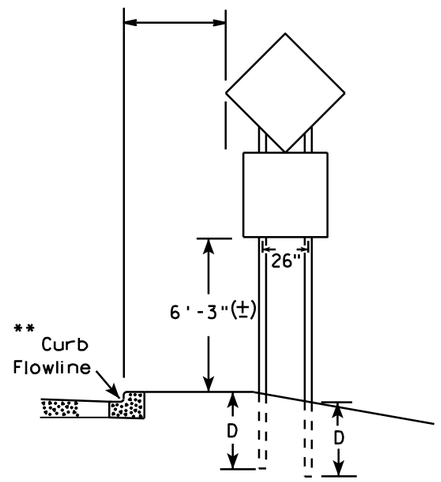

48" DIAMOND WARNING SIGN

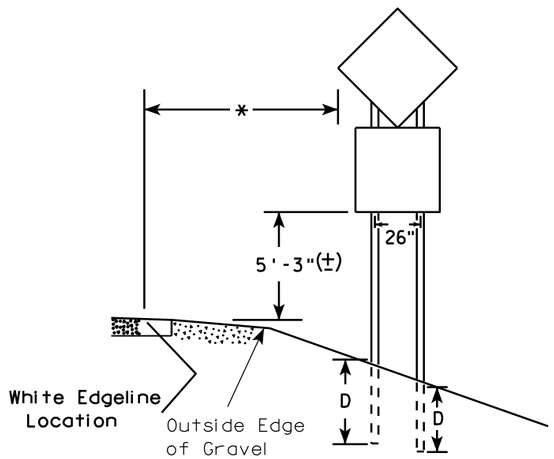

48" DIAMOND WARNING SIGN

SIGN SHAPE OTHER THAN DIAMOND (TWO POSTS REQUIRED)	
L	E
Greater than 48" Less than 60"	12"
60" to 120"	L/5

***

SIGN SHAPE OTHER THAN DIAMOND (THREE POSTS REQUIRED)	
L	E
Greater than 120" less than 168"	12"

SIGN SHAPE OTHER THAN DIAMOND (FOUR POSTS REQUIRED)	
L	E
168" and greater	12"

POST EMBEDMENT DEPTH

Area of Sign Installation (Sq. Ft.)	D (Min)
20 or Less	4'
Greater than 20	5'

GENERAL NOTES

1. For multiple post installations, individual post spacing shall be greater than 3'-6".
2. See tables below for required number of posts.
3. For expressways and freeways, mounting height is 7'-3" (±) or 6'-3" (±) depending upon existence of sub-sign.
4. The (±) tolerance for mounting height is 3 inches.
5. Minimum mounting height for J assemblies (A4-5) is 7'-3" (±) or 6'-3" (±) per urban or rural detail respectively.
6. Offset distance shall be consistent with existing signs or consistent throughout length of project.
7. Folding stop signs (R1-1F) shall be mounted at a height of 5'-3" (±) or as directed by the engineer.
8. The Double Arrow sign (W12-1) shall be mounted at a height of 2'-3" (±). The Chevron sign (W1-8), Roundabout Chevron panel (R6-4B), Clearance Markers (W5-52), Mile Markers (D10 series) & End of Road Markers (W5-56 & W5-56A) shall be mounted at a height of 4"-3" (±).

* 6 feet from edge of a paved shoulder or 12 feet from the edge of pavement (edge line location) or 2 feet from outside edge of gravel, whichever is greater unless directed by project engineer.

** The existence of curb and gutter does not in itself mandate the vertical clearance illustrated. That height is typically measured where there is sidewalk adjacent to the roadway or parking is permitted. In the absence of sidewalk vertical clearance is measured from the top of the curb. Offset of signs is measured from the flow line.

*** See A4-3 sign plate for signs 4' or less in width or 20 S.F. or less in area.

TYPICAL INSTALLATION OF TYPE II SIGNS ON MULTIPLE POSTS

WISCONSIN DEPT OF TRANSPORTATION

APPROVED Matthew R Rauch
for State Traffic Engineer

DATE 9/21/2011 PLATE NO. A4-4.11

PROJECT NO:	HWY:	COUNTY:		SHEET NO: 137	E

7

FILE NAME : C:\Users\PROJECTS\tr_stdplate\A44.DGN PLOT DATE : 21-SEP-2011 13:36 PLOT BY : mscsja PLOT NAME : PLOT SCALE : 109.249131:1.000000
WISDOT/CADDS SHEET 42

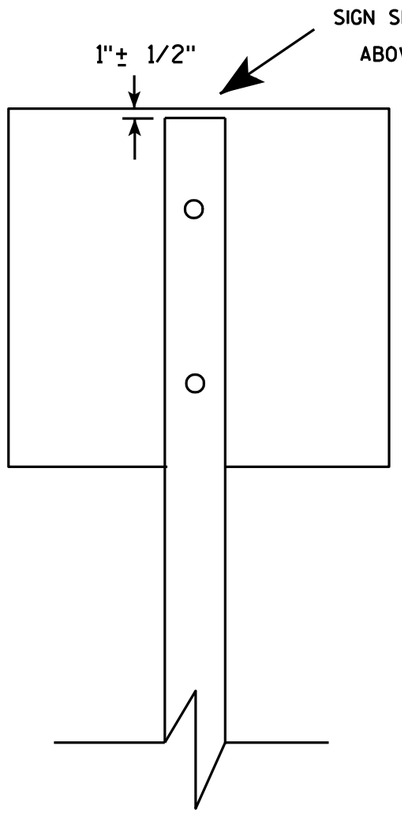

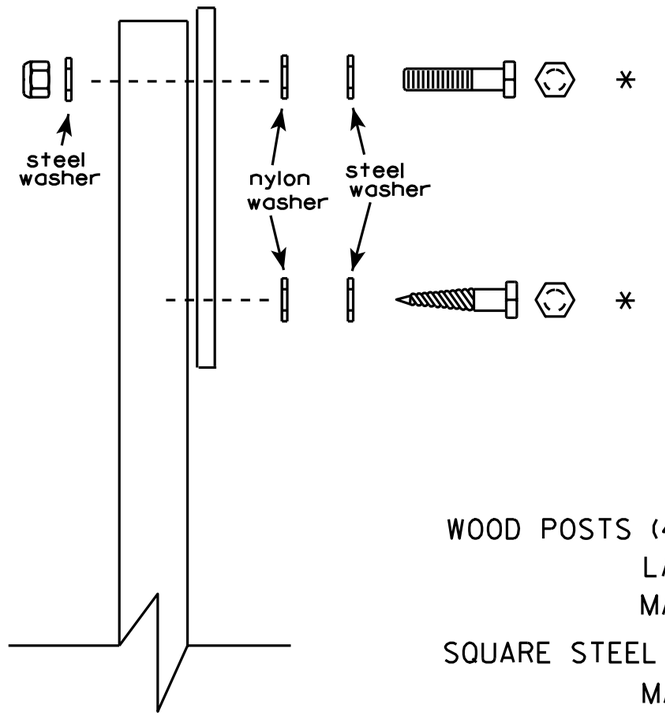

Nuts, bolts and lags used for mounting signs shall have hexagonal heads and shall be either :

a. Hot dip galvanized in accordance with ASTM Designation: A 153, Class D, or SC 3
b. Electro-galvanized in accordance with ASTM Designation : B 633, TYPE III, SC 3.

Threads on bolts and nuts shall be manufactured with sufficient allowance for the cadmium plate or galvanized coating to permit the nuts to run freely on the bolts.

WOOD POSTS (4" x 4" or 4" x 6")
LAG SCREWS - 3/8" X 3"
MACHINE BOLTS - 5/16" X 6-1/2" or 7" Length w/ nuts

SQUARE STEEL POSTS (2" x 2")
MACHINE BOLTS - 3/8" X 3-1/4" Length w/ nuts
RIVETS - 9/32 " (6605-9-6) BULB-TITE, TRI-FOLD, ALUMINUM BODY/MANDREL
O.D. FLANGE .720-.765 INCH, GRIP RANGE .042-.375 INCH

WASHERS (ALL POSTS) -
1-1/4" O.D. X 3/8" I.D. X 1/16" STEEL
1-1/4" O.D. X 3/8" I.D. X .080 NYLON for all Type H signs.

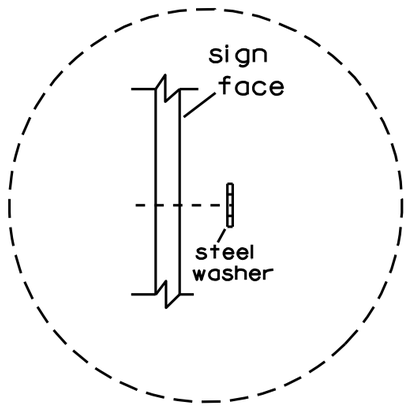

Washer Placement when Sign Has Other Than Type H or Type F Face

* Two different fastening systems are shown for illustration purposes. On any individual sign, either one or the other system shall be used. Actual number of fasteners per sign varies with the sign area, but normally there are two. For a single post installation, all signs greater than 9 sq. ft. require the use of 3 fasteners.

ATTACHMENT OF SIGNS TO POSTS

WISCONSIN DEPT OF TRANSPORTATION

APPROVED Matthew R Rauch
for State Traffic Engineer

DATE 3/23/10 PLATE NO. A4-8.7

7

7

PROJECT NO:

SHEET NO: 138 E

BRACE BANDING

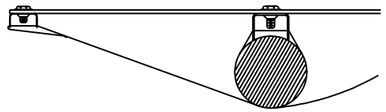

DETAIL C
CADMIUM PLATED STEEL BOLT
THROUGH BLACK BORDER

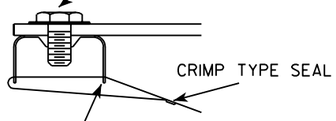

DETAIL C

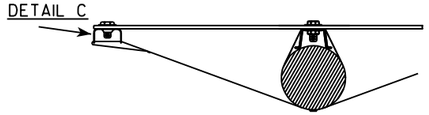

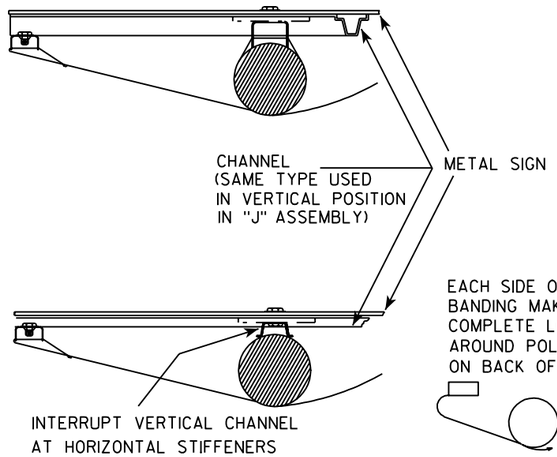

EACH SIDE OF BRACE
BANDING MAKES ONE
COMPLETE LOOP
AROUND POLE-SEAL
ON BACK OF POLE

BRACKET BANDING

SINGLE SIGN

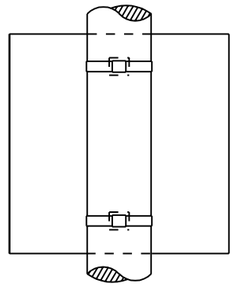

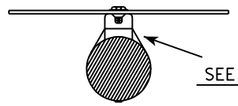

SEE DETAIL A

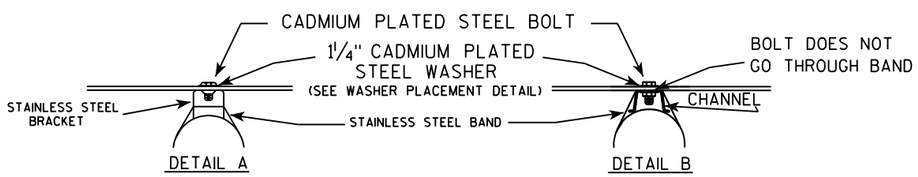

DETAIL A

DETAIL B

"J" ASSEMBLY

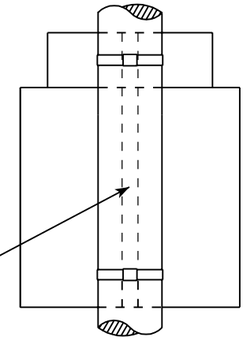

CHANNEL
SEE TYPICAL PANEL
INSTALLATION SHEET

SEE DETAIL B

GENERAL NOTES

1. Signs 4' or greater in width shall have one brace band installed at the center of the sign.
2. Signs 3' or greater in height shall have three bracket bands installed. Signs less than 3' in height shall have two bracket bands installed.
3. Banding and assembly bracket shall be stainless steel. All bands shall be ¾" in width and 0.025" thickness.

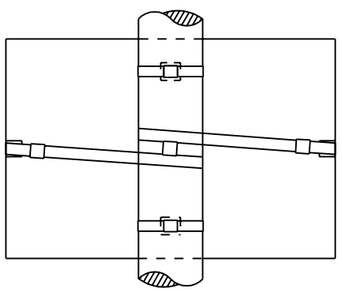

BRACE BANDING

BRACE BANDING SHALL BE TIGHTENED FIRMLY BUT NOT SO TIGHT AS TO APPRECIABLY CURVE FACE OF SIGN.

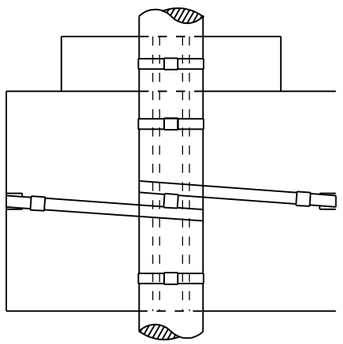

WASHER PLACEMENT

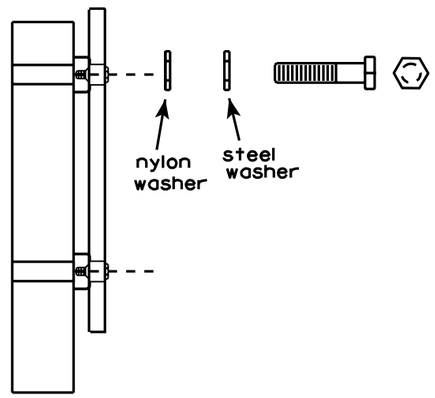

WASHERS (ALL POSTS) -
1-1/4" O.D. X 3/8" I.D. X 1/16" STEEL
1-1/4" O.D. X 3/8" I.D. X .080 NYLON
FOR ALL TYPE H SIGNS

STANDARD SIGN
SIGN BANDING DETAILS

WISCONSIN DEPT OF TRANSPORTATION

APPROVED *Matthew R Rauch*
for State Traffic Engineer

DATE 11/08/05 PLATE NO. A5-9.2

PROJECT NO:	HWY:	COUNTY:		SHEET NO: 139	E

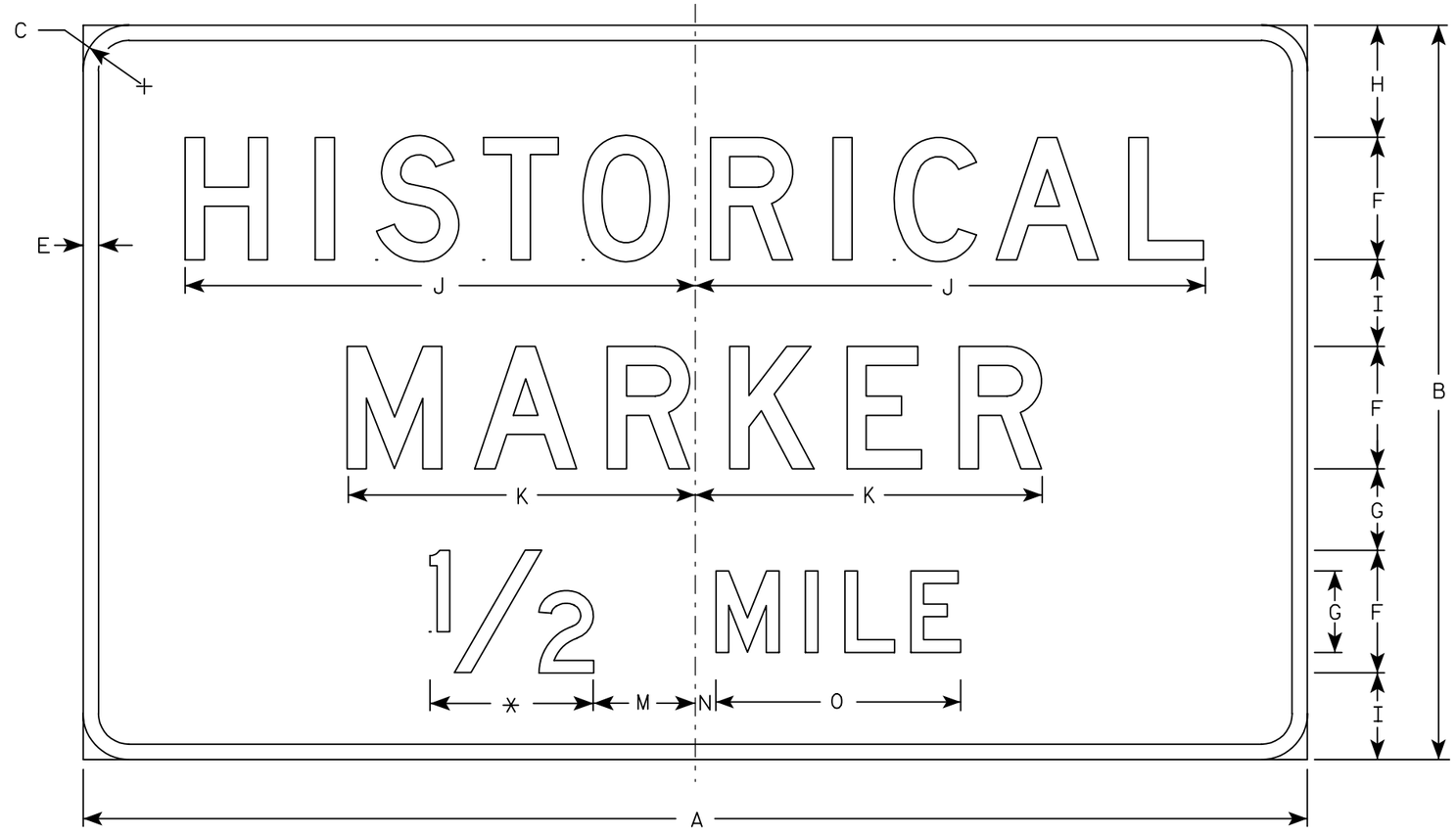

D5-63 * See Note 5

NOTES

1. Sign is Type II - Type H Reflective - reference WIS DOT Standard Specification for HIGHWAY and STRUCTURE CONSTRUCTION latest edition.
2. Color:
   Background - Brown
   Message - White
3. Message Series - D
4. Corners may be square or rounded when base material is plywood but borders shall be rounded as shown. When base material is metal, the corners and borders shall be rounded.
5. Substitute appropriate numerals and optically adjust spacing to achieve proper balance.

Metric equivalent for this sign is:

SIZE	
1	
2	1500 mm X 900 mm
3	
4	
5	

SIZE	A	B	C	D	E	F	G	H	I	J	K	L	M	N	O	P	Q	R	S	T	U	V	W	X	Y	Z	Area sq. ft.	Area m2
1																												
2	60	36	2 1/4		3/4	6	4	5 1/2	4 1/4	25	17		5	1	12												15.0	1.35
3																												
4																												
5																												

STANDARD SIGN
D5-63

WISCONSIN DEPT OF TRANSPORTATION

APPROVED Chester J Spang for State Traffic Engineer

DATE 3/23/99 PLATE NO. D5-63.9

STATE PROJECT NUMBER:

SHEET NO: 140 E

58,59,60,61,62,63

LEVELS ON - 2.3. 5.6. 10.

7

7

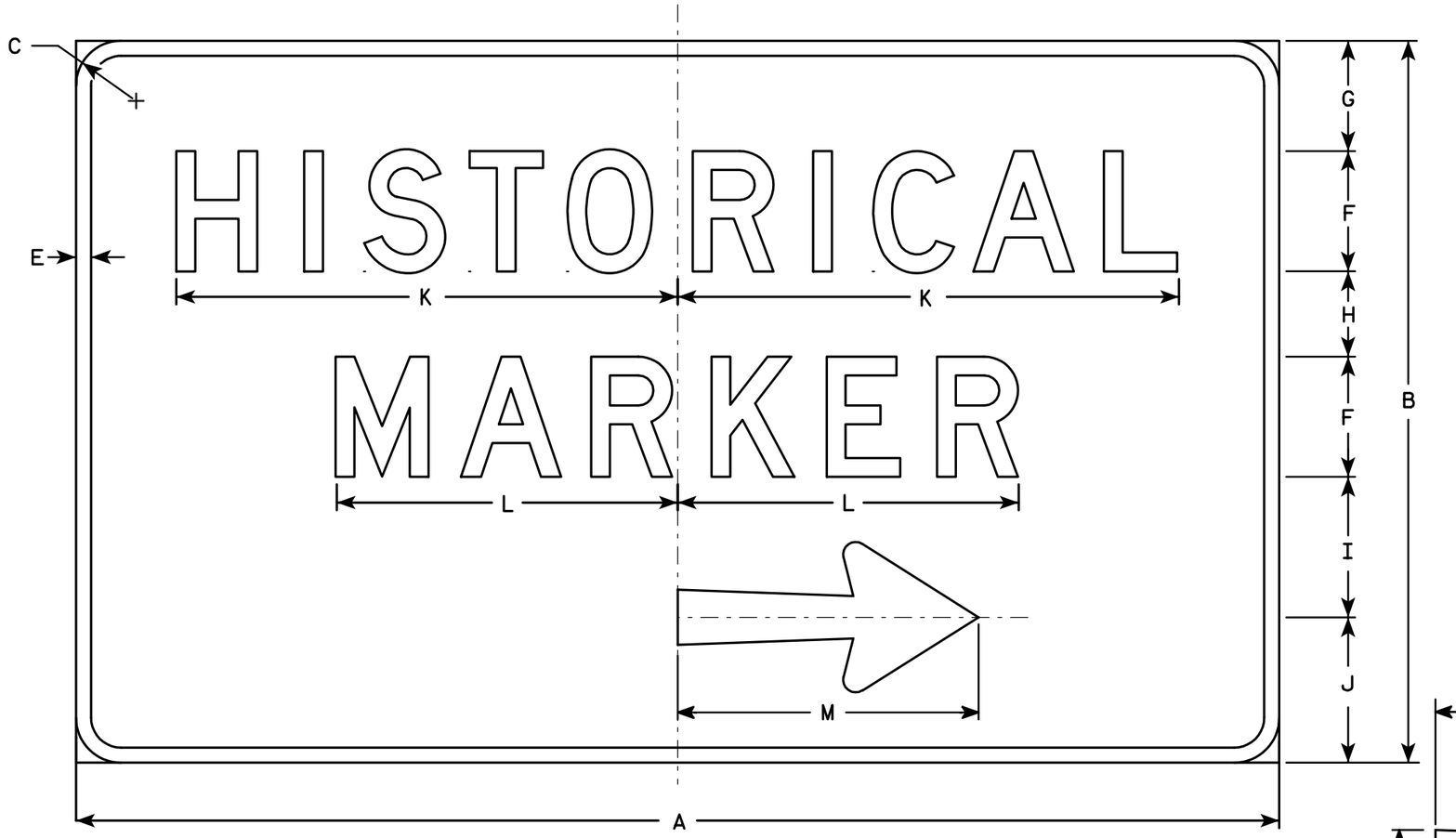

D5-64R

NOTES

1. Sign is Type II - Type H Reflective - reference WIS DOT Standard Specification for HIGHWAY and STRUCTURE CONSTRUCTION latest edition.
2. Color:
   Background - Brown
   Message - White
3. Message Series - D
4. Corners may be square or rounded when base material is plywood but borders shall be rounded as shown. When base material is metal, the corners and borders shall be rounded.
5. D5-64L is the same as D5-64R except the arrow is reversed.

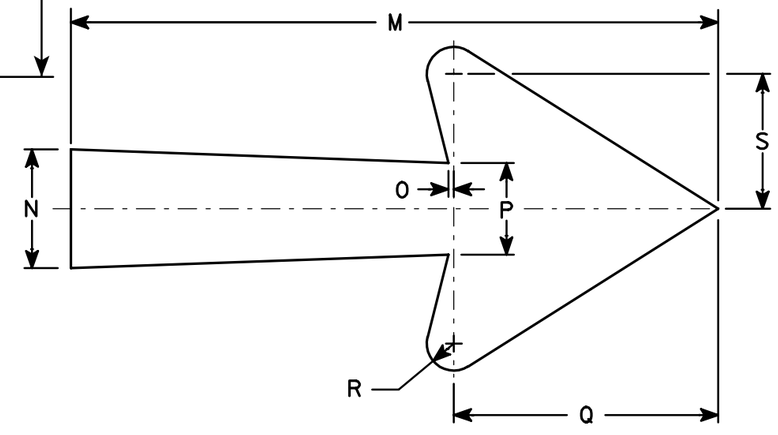

Arrow Detail

Metric equivalent for this sign is:

SIZE	
1	
2	1500 mm X 900 mm
3	
4	
5	

SIZE	A	B	C	D	E	F	G	H	I	J	K	L	M	N	O	P	Q	R	S	T	U	V	W	X	Y	Z	Area sq. ft.	Area m2
1																												
2	60	36	2 1/4		3/4	6	5 1/2	4 1/4	7	7 1/4	25	17	15	2 3/4	1/8	2 1/8	6 1/8	5/8	3 1/8								15.0	1.35
3																												
4																												
5																												

STANDARD SIGN
D5-64

WISCONSIN DEPT OF TRANSPORTATION

APPROVED Chester J Spaeg for State Traffic Engineer

DATE 1/09/02 PLATE NO. D5-64.5

STATE PROJECT NUMBER:

SHEET NO: 141 E

FILE NAME : C:\Users\Projects\tr_stdplate\D564.DGN PLOT DATE : 09-JAN-2002 11:10 ORG DATE : 7/17/97 Originator : Don Kluever

WISDOT/CADDS SHEET 42

7

7

58,59,60,61,62,63

LEVELS ON - 2,3, 5,6, 10,

* VARIES

NOTES

1. Sign is Type II - Type H Reflective - reference WIS DOT Standard Specification for HIGHWAY and STRUCTURE CONSTRUCTION latest edition.
2. Color:
   Background - White
   Message - (See Note 5)
3. Message Series - (See Note 6)
4. Corners may be square or rounded when base material is plywood but borders shall be rounded as shown. When base material is metal, the corners and borders shall be rounded.
5. Border - Blue
   Line 1 - Red
   Line 2 - Black
   Line 3-5 - Blue
6. Line 1 - Dutch 8011L
   Line 2 - Series E
   Line 3-5 - Series C
7. Contractor shall provide and install a new post bracket in accordance with the I55-56B sign detail.

Background Colors of Symbol*

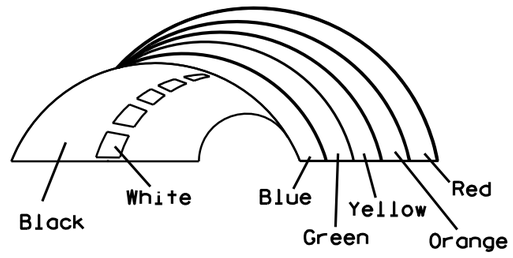

*1/4" Black Border between each color of rainbow and border of rainbow

SIZE	A	B	C	D	E	F	G	H	I	J	K	L	M	N	O	P	Q	R	S	T	U	V	W	X	Y	Z	Area sq. ft.
1																											
2	30	36	1 1/2	1/2	5/8	3	2	3 1/2	2 7/8	1	8	2 1/8	11 1/4	11 1/8	9 3/8	1 1/4		3/4	12 5/8	7 1/2							7.5
3																											
4																											
5																											

STANDARD SIGN
I55-56

WISCONSIN DEPT OF TRANSPORTATION

APPROVED Matthew R Rauch
for State Traffic Engineer

DATE 4/27/11 PLATE NO. 155-56.3

PROJECT NO:	HWY:	COUNTY:		SHEET NO: 142

ISOMETRIC VIEW

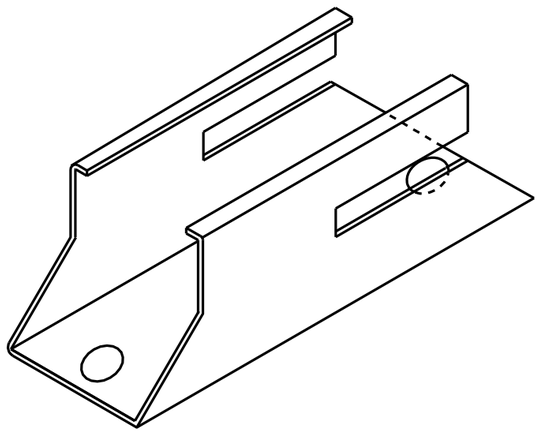

NOTES

1. Must be capable of permanent attachment to a wood or steel channel sign post utilizing the fastening hardware specified on the A4-8 sign plate.
2. Shall be entirely primed and painted with two coats of a black powder coated enamel paint.
3. Shall be made with 12 gauge steel, and incorporate no welds, no hinged components, no threaded lock-type components, and no parts which are loose or can be separated from the main body.
4. Shall have rounded edges with at least 1/8" radii.
5. Shall not have unrounded and uncoated metal edges which can contact the back surface of the roll-up sign.
6. Top of bracket shall be mounted 2' below the bottom of the I55-56 sign.
7. Cost of bracket and fastening hardware shall be incidental to the I55-56 sign.

TOP VIEW

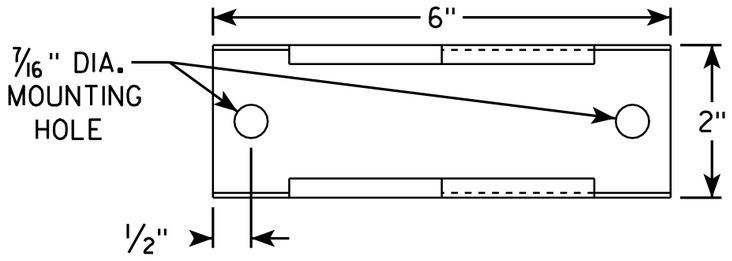

SIDE VIEW

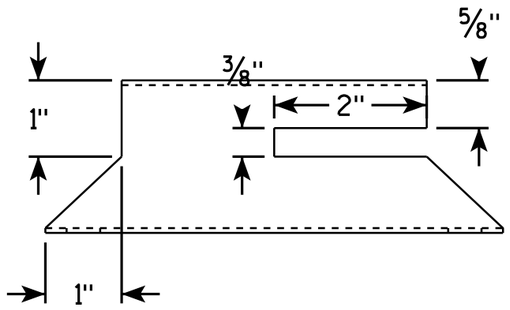

END VIEW

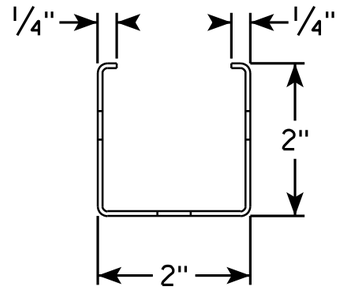

SIDE VIEW

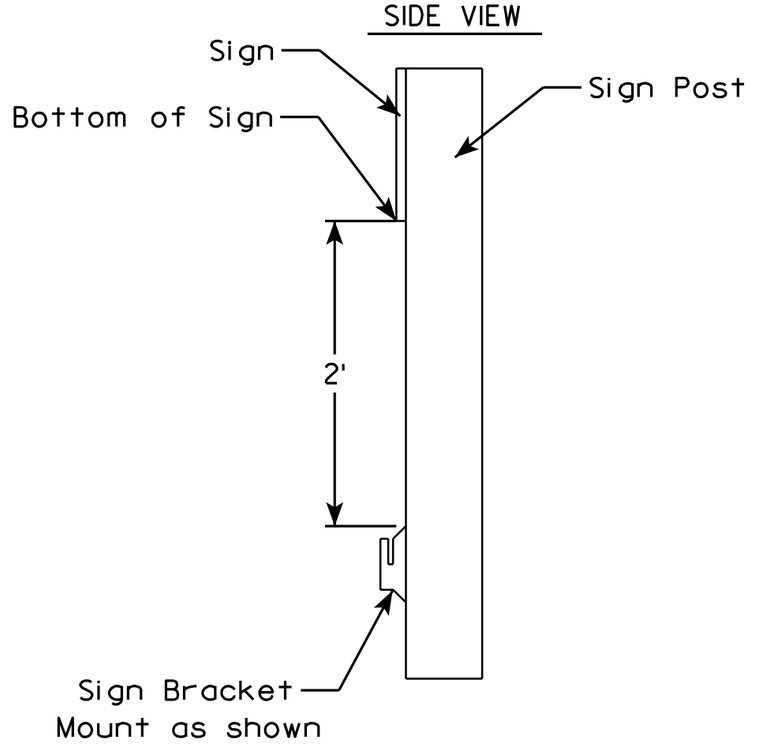

7

7

ROLLUP SIGN BRACKET
I55-56B

WISCONSIN DEPT OF TRANSPORTATION

APPROVED Matthew R Rauch
for State Traffic Engineer

DATE 2/5/10 PLATE NO. I55-56B.1

PROJECT NO:	HWY:	COUNTY:		SHEET NO: 143	E

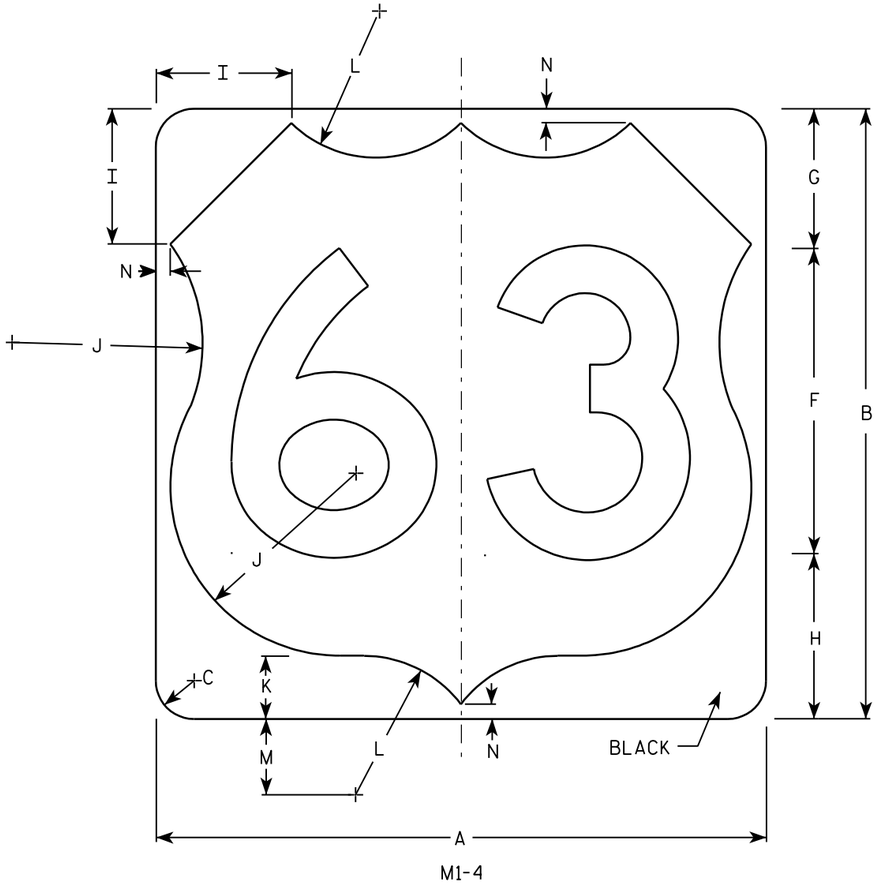

M1-4

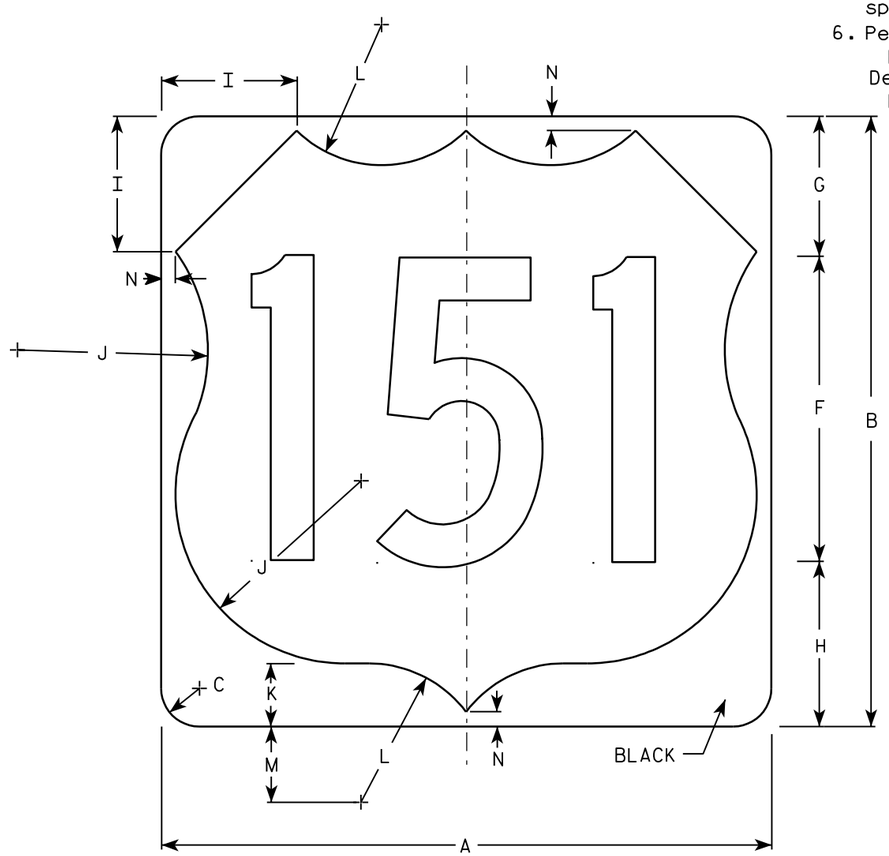

M1-4

NOTES

1. Sign is Type II - See Note 6 - reference WIS DOT Standard Specification for HIGHWAY and STRUCTURE CONSTRUCTION latest edition.
2. Color:
   Background - White & Black - See Note 6
   Message - Black
3. Message Series - See note 5
4. Corners may be square or rounded when base material is plywood but borders shall be rounded as shown. When base material is metal, the corners and borders shall be rounded.
5. Substitute appropriate numerals and adjust spacing as per Plate A10-1.
6. Permanent Signs
   Background - Type H Reflective
   Detour or other temporary signs
   Background - Reflective

Metric equivalent for this sign is:

SIZE	
1	
2	600 mm X 600 mm
3	900 mm X 900 mm
4	900 mm X 900 mm
5	900 mm X 900 mm

SIZE	A	B	C	D	E	F	G	H	I	J	K	L	M	N	O	P	Q	R	S	T	U	V	W	X	Y	Z	Area sq. ft.	Area m2
1																												
2	24	24	1 1/2			12	5 1/2	6 1/2	5	7 1/2	2 1/2	5 1/2	3	1/2													4.0	.36
3	36	36	2 1/4			18	8 1/4	9 1/4	7 1/4	11 1/4	3 3/4	8 1/4	4 1/2	3/4													9.0	.81
4	36	36	2 1/4			18	8 1/4	9 1/4	7 1/4	11 1/4	3 3/4	8 1/4	4 1/2	3/4													9.0	.81
5	36	36	2 1/4			18	8 1/4	9 1/4	7 1/4	11 1/4	3 3/4	8 1/4	4 1/2	3/4													9.0	.81

USH MARKER
M1-4 FOR ASSEMBLIES

WISCONSIN DEPT OF TRANSPORTATION

APPROVED Matthew R Rauch
for State Traffic Engineer

DATE 08/25/05 PLATE NO. M1-4.9

PROJECT NO: | HWY: | COUNTY: | SHEET NO: 144 | E

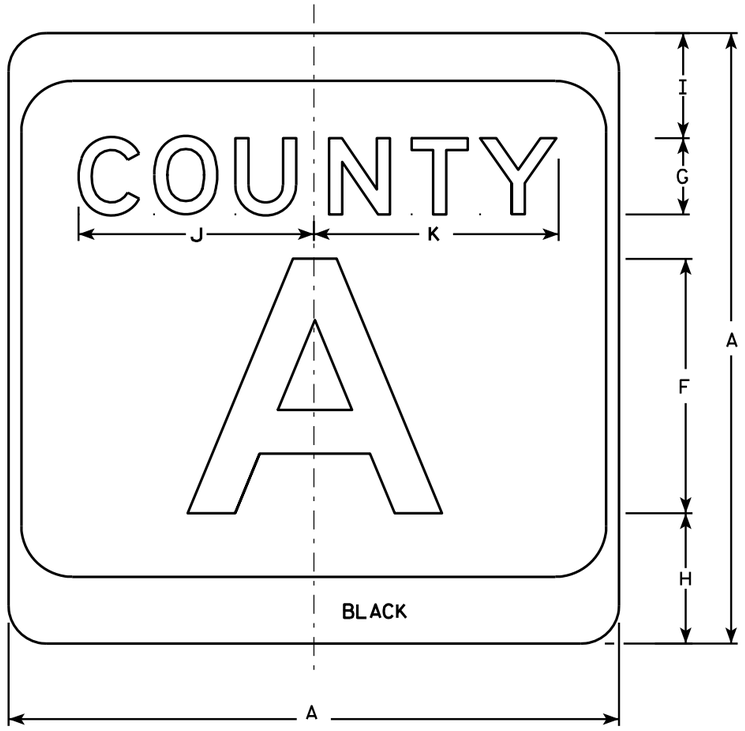

M1-5A

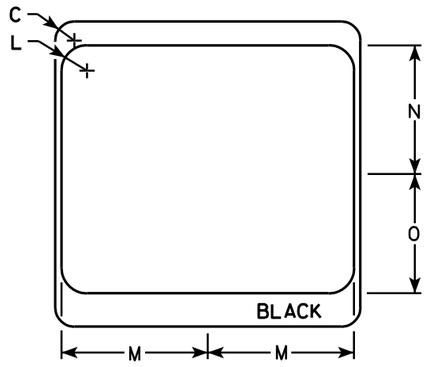

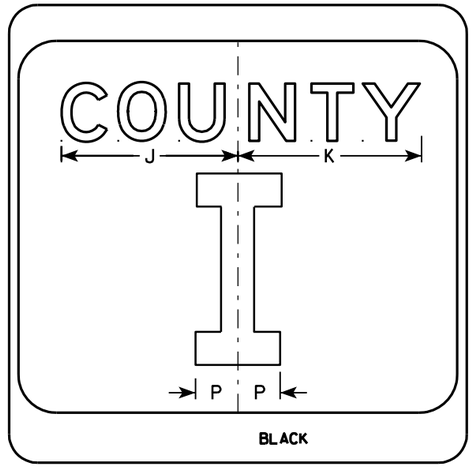

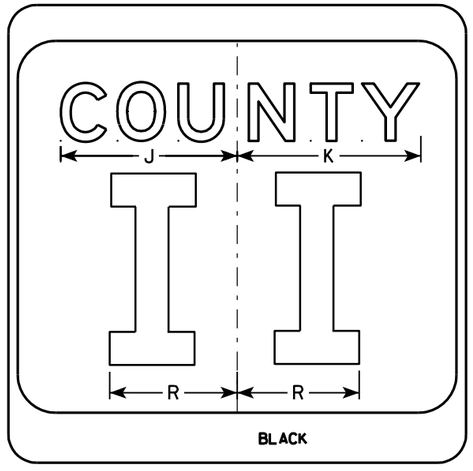

NOTES

1. Sign is Type II - see Note 7 - reference WIS DOT Standard Specification for HIGHWAY and STRUCTURE CONSTRUCTION latest edition.
2. Color:
   Background - White & Black - See Note 7
   Message - Black
3. Message Series - see Note 5
4. Corners may be square or rounded when base material is plywood but borders shall be rounded as shown. When base material is metal, the corners and borders shall be rounded.
5. Message Series E for 1 letter.
   Message Series D for 2 letters unless message is too big then Series C.
   Message Series C for 3 letters unless message is too big then Series B.
6. Substitute appropriate letters & optically center to achieve proper balance.
7. Permanent Signs
   Background - Type H Reflective
   Detour or temporary Signs
   Background - Reflective

SIZE	A	B	C	D	E	F	G	H	I	J	K	L	M	N	O	P	Q	R	S	T	U	V	W	X	Y	Z	Area sq. ft.
1																											
2	24		1 1/2			10	3	5 1/8	4 1/8	9 1/4	9 5/8	2	11 1/2	10 1/8	9 3/8	2 1/4		6 5/8									4.0
3	36		2 1/4			16	4	7 5/8	5 5/8	12 1/4	12 7/8	3	17 1/8	15 1/4	14	3 3/8		10									9.0
4	36		2 1/4			16	4	7 5/8	5 5/8	12 1/4	12 7/8	3	17 1/8	15 1/4	14	3 3/8		10									9.0
5	36		2 1/4			16	4	7 5/8	5 5/8	12 1/4	12 7/8	3	17 1/8	15 1/4	14	3 3/8		10									9.0

CTH MARKER
M1-5A FOR ASSEMBLIES

WISCONSIN DEPT OF TRANSPORTATION

APPROVED Matthew R Rauch
for State Traffic Engineer

DATE 9/27/11 PLATE NO. M1-5A.8

PROJECT NO:	HWY:	COUNTY:		SHEET NO: 145	E

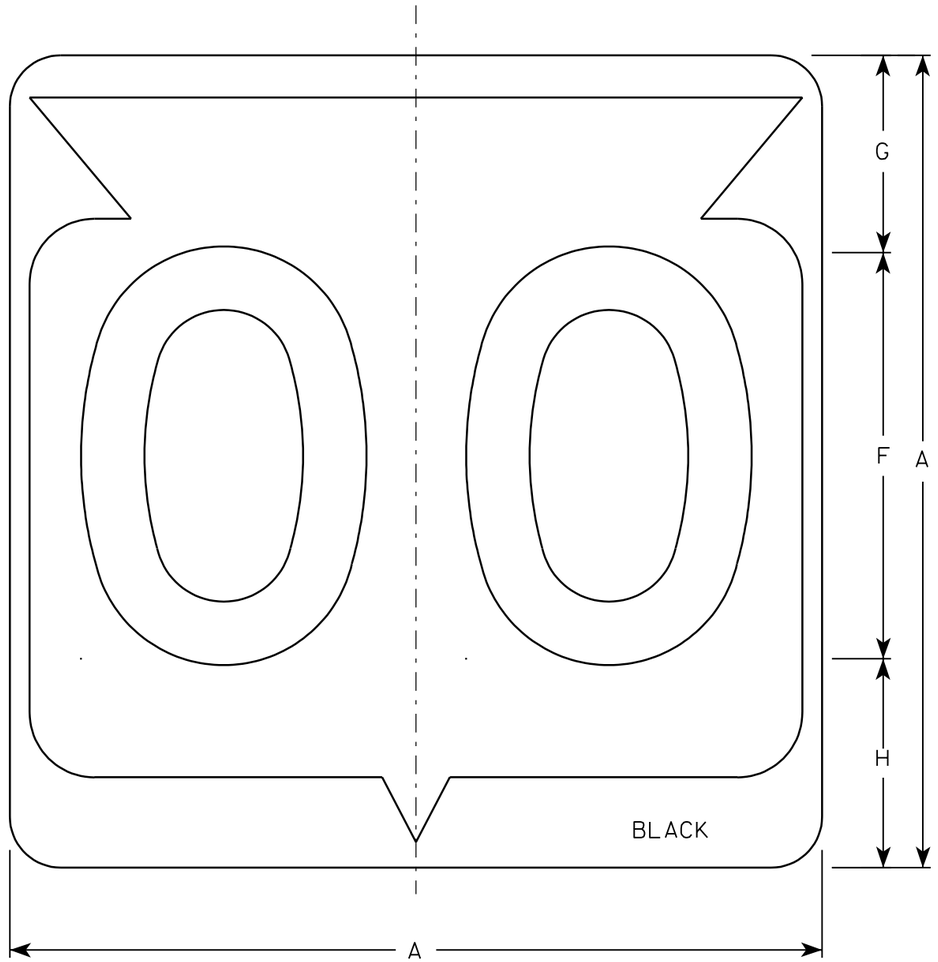

M1-6

NOTES

1. Sign is Type II - See Note 6 - reference WIS DOT Standard Specification for HIGHWAY and STRUCTURE CONSTRUCTION latest edition.
2. Color:
   Background - White & Black - See Note 6
   Message - Black
3. Message Series - See note 5
4. Corners may be square or rounded when base material is plywood but borders shall be rounded as shown. When base material is metal, the corners and borders shall be rounded.
5. Substitute appropriate Series numerals and adjust spacing as per plate A10-1.
6. Permanent Signs
   Background - Type H Reflective
   Detour or temporary Signs
   Background - Reflective

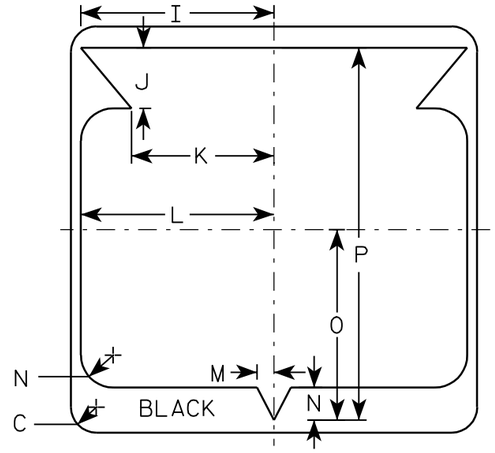

Metric equivalent for this sign is:

SIZE	
1	
2	600 mm X 600 mm
3	900 mm X 900 mm
4	900 mm X 900 mm
5	900 mm X 900 mm

SIZE	A	B	C	D	E	F	G	H	I	J	K	L	M	N	O	P	Q	R	S	T	U	V	W	X	Y	Z	Area sq. ft.	Area m2
1																												
2	24		1 1/2			12	5 1/2	6 1/2	10 1/4	2 1/2	8 7/8	11 1/2	1	1 7/8	11 1/4	21 7/8											4.0	.36
3	36		2 1/4			18	8 3/4	9 1/4	15 3/8	5 3/8	12 5/8	17 1/8	1 1/2	2 7/8	16 7/8	33											9.0	.81
4	36		2 1/4			18	8 3/4	9 1/4	15 3/8	5 3/8	12 5/8	17 1/8	1 1/2	2 7/8	16 7/8	33											9.0	.81
5	36		2 1/4			18	8 3/4	9 1/4	15 3/8	5 3/8	12 5/8	17 1/8	1 1/2	2 7/8	16 7/8	33											9.0	.81

STATE ROUTE MARKER M1-6 FOR ASSEMBLIES

WISCONSIN DEPT OF TRANSPORTATION

APPROVED Chester J Spang for State Traffic Engineer

DATE 3/20/02 PLATE NO. M1-6.9

PROJECT NO:	HWY:	COUNTY:		SHEET NO: 146	E

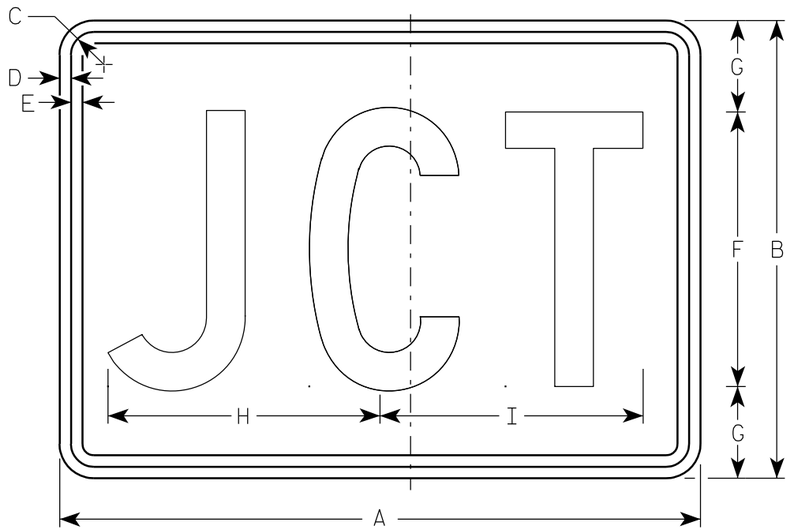

M2-1
MK2-1
MM2-1
MR2-1

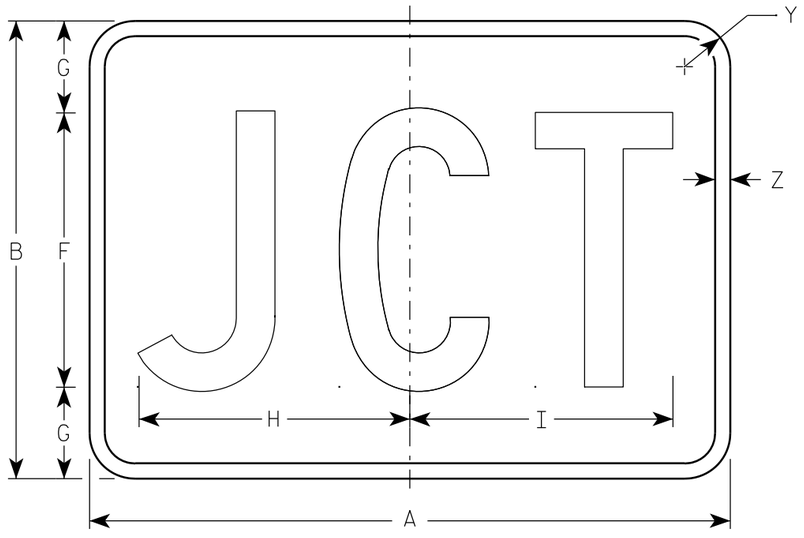

MB2-1
MG2-1
MN2-1

NOTES

1. Sign is Type II - See Note 5 - reference WIS DOT Standard Specification for HIGHWAY and STRUCTURE CONSTRUCTION latest edition.
2. Color:
   Background - See note 5
   Message - See note 5
3. Message Series - C
4. Corners may be square or rounded when base material is plywood but borders shall be rounded as shown. When base material is metal, the corners and borders shall be rounded.
5. M2-1 Background - White - Type H Reflective
   (Detour or temporary Signs - Reflective)
   Message - Black
   MB2-1 Background - Blue
   Message - White - Type H Reflective
   (Detour or temporary Signs - Reflective)
   MG2-1 Background - Green
   Message - White - Type H Reflective
   MK2-1 Background - Green
   Message - White - Type H Reflective
   MM2-1 Background - White - Type H Reflective
   Message - Green
   MN2-1 Background - Brown
   Message - White - Type H Reflective
   MR2-1 Background - Brown
   Message - Yellow - Type H Reflective

Metric equivalent for this sign is:

SIZE	
1	
2	525 mm X 375 mm
3	750 mm X 525 mm
4	750 mm X 525 mm
5	750 mm X 525 mm

SIZE	A	B	C	D	E	F	G	H	I	J	K	L	M	N	O	P	Q	R	S	T	U	V	W	X	Y	Z	Area sq. ft.	Area m2
1																												
2	21	15	1 1/8	3/8	3/8	9	3	8 7/8	8 5/8																1 1/2	1/2	2.20	0.20
3	30	21	1 1/8	3/8	3/8	13	4	12 7/8	12 3/8																1 1/2	1/2	4.40	0.20
4	30	21	1 1/8	3/8	3/8	13	4	12 7/8	12 3/8																1 1/2	1/2	4.40	0.20
5	30	21	1 1/8	3/8	3/8	13	4	12 7/8	12 3/8																1 1/2	1/2	4.40	0.20

STANDARD SIGN
M2-1

WISCONSIN DEPT OF TRANSPORTATION

APPROVED Matthew R Rauch
for State Traffic Engineer

DATE 3/16/10 PLATE NO. M2-1.10

PROJECT NO:	HWY:	COUNTY:		SHEET NO: 147	E

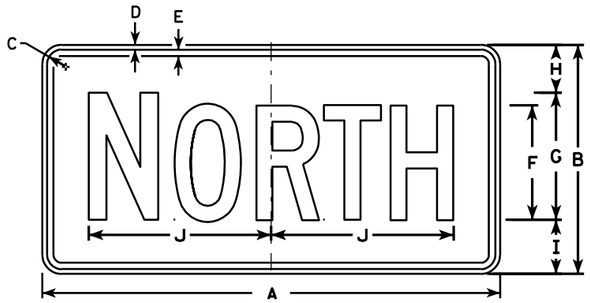

M3-1
MK3-1
MO3-1

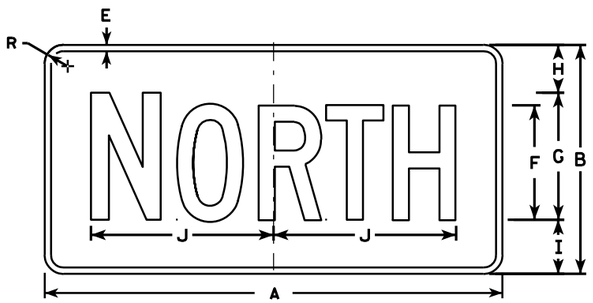

MB3-1
MG3-1
MM3-1
MN3-1

M3-2
MK3-2
MO3-2

MB3-2
MG3-2
MM3-2
MN3-2

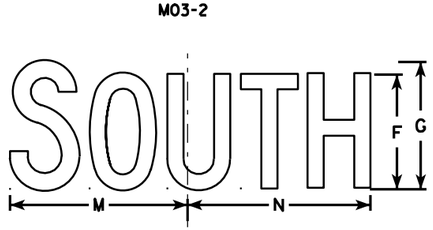

M3-3
MK3-3
MO3-3

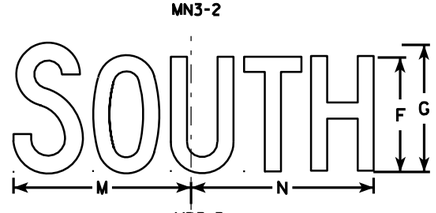

MB3-3
MG3-3
MM3-3
MN3-3

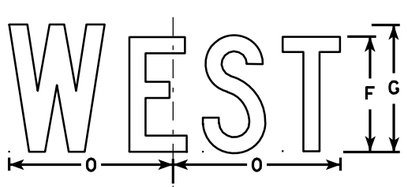

M3-4
MK3-4
MO3-4

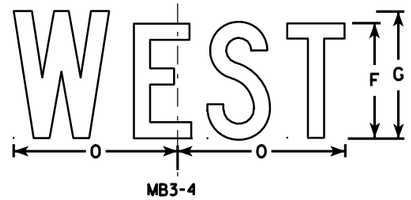

MB3-4
MG3-4
MM3-4
MN3-4

NOTES

1. All Signs Type II - See Note 5 - reference WIS DOT Standard Specification for HIGHWAY and STRUCTURE CONSTRUCTION latest edition.
2. Color:
   Background - See note 5
   Message - See note 5
3. Message Series - C
4. Corners may be square or rounded when base material is plywood but borders shall be rounded as shown. When base material is metal, the corners and borders shall be rounded.
5. M3-1 thru M3-4 Background - White - Type H Reflective
   (Detour or temporary signs - Reflective)
   Message - Black
   MB3-1 thru MB3-4 Background - Blue
   Message - White - Type H Reflective
   (Detour or temporary signs - Reflective)
   MG3-1 thru MG3-4 Background - Green
   Message - White - Type H Reflective
   MK3-1 thru MK3-4 Background - Green
   Message - White - Type H Reflective
   MM3-1 thru MM3-4 Background - White - Type H Reflective
   Message - Green
   MN3-1 thru MN3-4 Background - Brown
   Message - White - Type H Reflective
   M03-1 thru M03-4 Background - Orange - Reflective
   Message - Black
6. Note the first letter of each direction is larger than the remainder of the message.

SIZE	A	B	C	D	E	F	G	H	I	J	K	L	M	N	O	P	Q	R	S	T	U	V	W	X	Y	Z	Area sq. ft.
1																											
2	24	12	1 1/8	3/8	3/8	6	7	2 1/4	2 3/4	10 1/4	7 7/8	8 3/8	10 1/4	9 3/4	8 3/4			1 1/2									2.00
3	36	18	1 1/8	3/8	1/2	9	10	3 3/4	4 1/4	14 3/8	12	12 1/8	14	14 1/8	13			1 1/2									4.5
4	36	18	1 1/8	3/8	1/2	9	10	3 3/4	4 1/4	14 3/8	12	12 1/8	14	14 1/8	13			1 1/2									4.5
5	36	18	1 1/8	3/8	1/2	9	10	3 3/4	4 1/4	14 3/8	12	12 1/8	14	14 1/8	13			1 1/2									4.5

STANDARD SIGNS
M3-1 thur M3-4
SERIES

WISCONSIN DEPT OF TRANSPORTATION

APPROVED Matthew R Rauch for State Traffic Engineer

DATE 11/10/10 PLATE NO. M3-1.12

PROJECT NO:	HWY:	COUNTY:		SHEET NO: 148	E

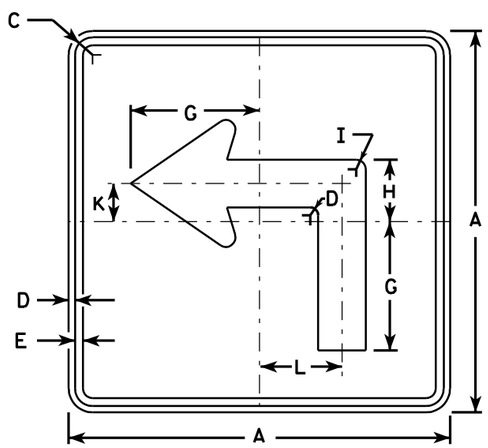

M5-1L
MK5-1L
MM5-1L
MO5-1L
MR5-1L

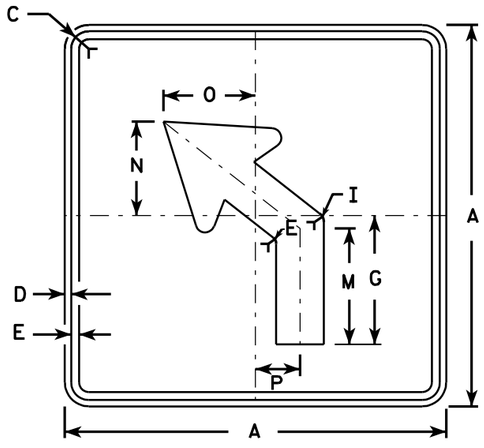

M5-2L
MK5-2L
MM5-2L
MO5-2L
MR5-2L

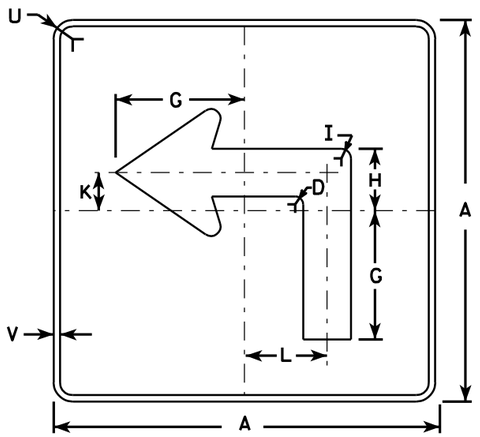

MB5-1L
MG5-1L
MN5-1L

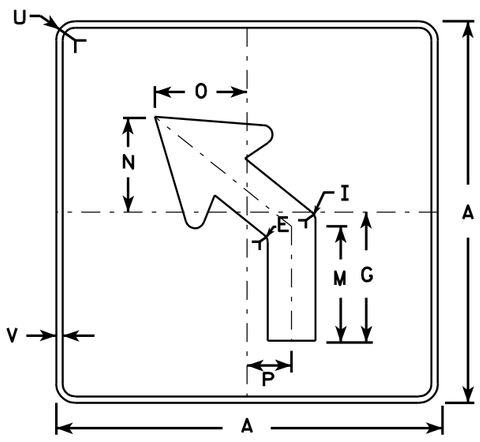

MB5-2L
MG5-2L
MN5-2L

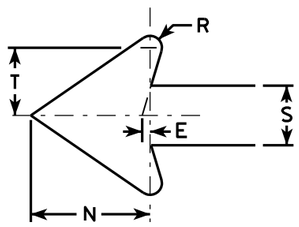

NOTES

1. Signs are Type II - See Note 4 - reference WIS DOT Standard Specification for HIGHWAY and STRUCTURE CONSTRUCTION latest edition.
2. Color:
   Background - See note 4
   Message - See note 4
3. Corners may be square or rounded when base material is plywood but borders shall be rounded as shown. When base material is metal, the corners and borders shall be rounded.
4. M5-1 and M5-2 Background - White - Type H Reflective (Detour or temporary Signs - Reflective) Message - Black
   MB5-1 and MB5-2 Background - Blue Message - White - Type H Reflective (Detour or temporary Signs - Reflective)
   MG5-1 and MG5-2 Background - Green Message - White - Type H Reflective
   MK5-1 and MK5-2 Background - Green Message - White Type H Reflective
   MM5-1 and MM5-2 Background - White - Type H Reflective Message - Green
   MN5-1 and MN5-2 Background - Brown Message - White - Type H Reflective
   MO5-1 and MO5-2 Background - Orange - Reflective Message - Black
   MR5-1 and MR5-2 Background - Brown Message - Yellow - Type H Reflective
5. M5-1R same as M5-1L except arrow points right.
6. M5-2R same as M5-2L except arrow tilts right.

Metric equivalent for this sign is:

SIZE	
1	
2	525 mm X 525 mm
3	750 mm X 750 mm
4	750 mm X 750 mm
5	750 mm X 750 mm

SIZE	A	B	C	D	E	F	G	H	I	J	K	L	M	N	O	P	Q	R	S	T	U	V	W	X	Y	Z	Area sq. ft.	Area m²
1																												
2	21		1 1/8	3/8	3/8		7	3 3/8	5/8		2 1/8	4 1/2	6 3/8	5 1/4	5	2 1/2		1/2	2 5/8	3	1 1/2	1/2					3.06	0.28
3	30		1 3/8	1/2	5/8		10 1/8	4 1/8	7/8		3	6 1/2	9 1/8	7 1/2	7 1/4	3 1/2		3/4	3 3/4	4 1/4	1 7/8	1/2					6.25	0.56
4	30		1 3/8	1/2	5/8		10 1/8	4 7/8	7/8		3	6 1/2	9 1/8	7 1/2	7 1/4	3 1/2		3/4	3 3/4	4 1/4	1 7/8	1/2					6.25	0.56
5	30		1 3/8	1/2	5/8		10 1/8	4 7/8	7/8		3	6 1/2	9 1/8	7 1/2	7 1/4	3 1/2		3/4	3 3/4	4 1/4	1 7/8	1/2					6.25	0.56

STANDARD SIGN
M5-1 & M5-2

WISCONSIN DEPT OF TRANSPORTATION

APPROVED Matthew R Rauch
for State Traffic Engineer

DATE 3/16/10 PLATE NO. M5-1.11

PROJECT NO:	HWY:	COUNTY:		SHEET NO: 149	E

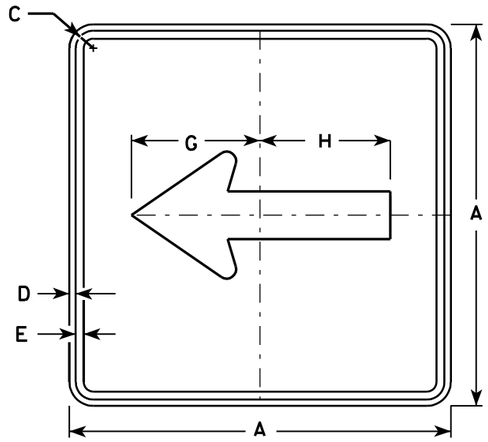

M6-1
MK6-1
MM6-1
MO6-1
MR6-1

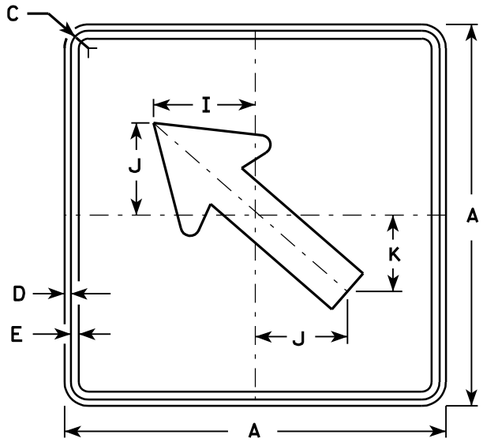

M6-2
MK6-2
MM6-2
MO6-2
MR6-2

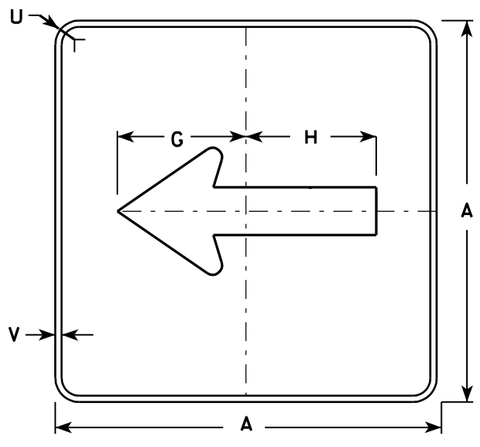

MB6-1
MG6-1
MN6-1

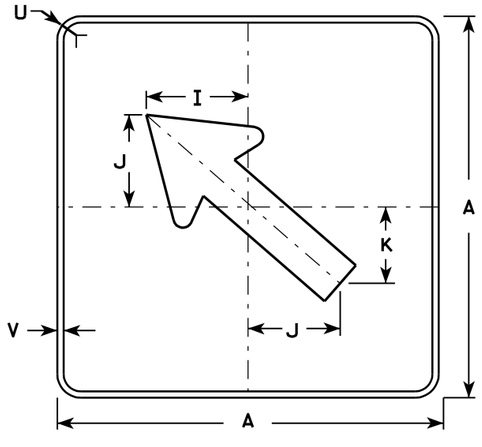

MB6-2
MG6-2
MN6-2

NOTES

1. Signs are Type II - See Note 4 - reference WIS DOT Standard Specification for HIGHWAY and STRUCTURE CONSTRUCTION latest edition.
2. Color:
   Background - See note 4
   Message - See note 4
3. Corners may be square or rounded when base material is plywood but borders shall be rounded as shown. When base material is metal, the corners and borders shall be rounded.
4. M6-1 and M6-2 Background - White - Type H Reflective (Detour or temporary Signs - Reflective) Message - Black
   MB6-1 and MB6-2 Background - Blue Message - White - Type H Reflective (Detour or temporary Signs - Reflective)
   MG6-1 and MG6-2 Background - Green Message - White - Type H Reflective
   MK6-1 and MK6-2 Background - Green Message - White - Type H Reflective
   MM6-1 and MM6-2 Background - White - Type H Reflective Message - Green
   MN6-1 and MN6-2 Background - Brown Message - White - Type H Reflective
   MO6-1 and MO6-2 Background - Orange - Reflective Message - Black
   MR6-1 and MR6-2 Background - Brown Message - Yellow - Type H Reflective

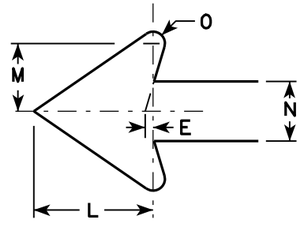

Metric equivalent for this sign is:

SIZE	
1	
2	525 mm X 525 mm
3	750 mm X 750 mm
4	750 mm X 750 mm
5	750 mm X 750 mm

SIZE	A	B	C	D	E	F	G	H	I	J	K	L	M	N	O	P	Q	R	S	T	U	V	W	X	Y	Z	Area sq. ft.	Area m2
1																												
2	21		1 1/8	3/8	3/8		7 1/2	7 1/8	5 5/8	5	4 1/4	5 1/4	3	2 5/8	1/2						1 1/2	1/2					3.06	0.28
3	30		1 3/8	1/2	5/8		10 3/4	10 1/4	8	7 1/4	6	7 1/2	4 1/4	3 3/4	3/4						1 7/8	1/2					6.25	0.56
4	30		1 3/8	1/2	5/8		10 3/4	10 1/4	8	7 1/4	6	7 1/2	4 1/4	3 3/4	3/4						1 7/8	1/2					6.25	0.56
5	30		1 3/8	1/2	5/8		10 3/4	10 1/4	8	7 1/4	6	7 1/2	4 1/4	3 3/4	3/4						1 7/8	1/2					6.25	0.56

STANDARD SIGN M6-1 & M6-2 SERIES

WISCONSIN DEPT OF TRANSPORTATION

APPROVED Matthew R Rauch
for State Traffic Engineer

DATE 3/16/10 PLATE NO. M6-1.12

PROJECT NO:	HWY:	COUNTY:		SHEET NO: 150	E

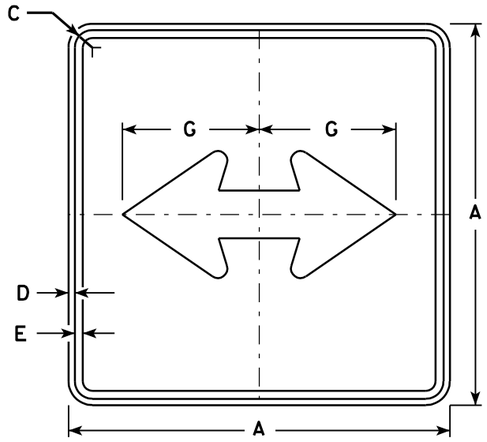

M6-4
MK6-4
MM6-4
MO6-4
MR6-4

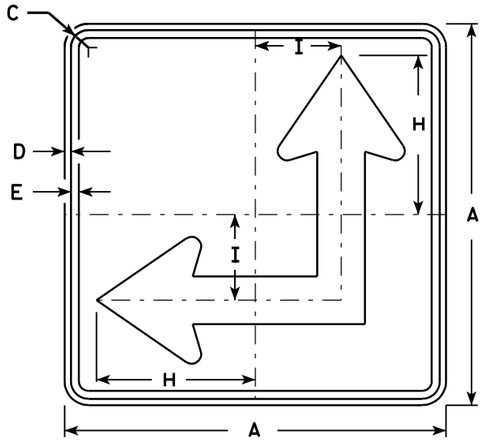

M6-6
MK6-6
MM6-6
MO6-6
MR6-6

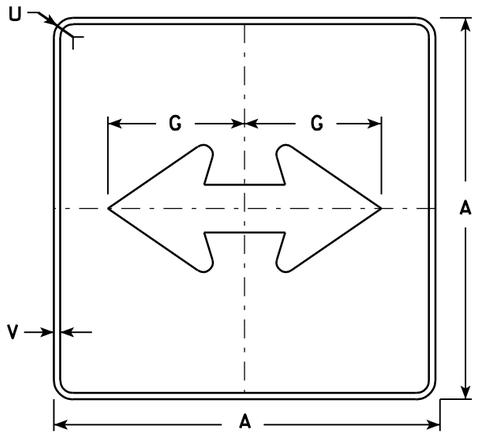

MB6-4
MG6-4
MN6-4

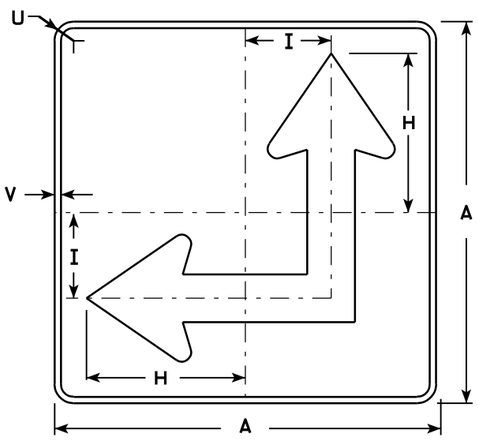

MB6-6
MG6-6
MN6-6

NOTES

1. Signs are Type II - See Note 4 - reference WIS DOT Standard Specification for HIGHWAY and STRUCTURE CONSTRUCTION latest edition.
2. Color:
   Background - See Note 4
   Message - See Note 4
3. Corners may be square or rounded when base material is plywood but borders shall be rounded as shown. When base material is metal, the corners and borders shall be rounded.
4. M6-4 and M6-6 Background - White - Type H Reflective
   (Detour or temporary Signs - Reflective)
   Message - Black
   MB6-4 and MB6-6 Background - Blue
   Message - White - Type H Reflective
   (Detour or temporary Signs - Reflective)
   MG6-4 and MG6-6 Background - Green
   Message - White - Type H Reflective
   MK6-4 and MK6-6 Background - Green
   Message - White - Type H Reflective
   MM6-4 and MM6-6 Background - White - Type H Reflective
   Message - Green
   MN6-4 and MN6-6 Background - Brown
   Message - White - Type H Reflective
   MO6-4 and MO6-6 Background - Orange - Reflective
   Message - Black
   MR6-4 and MR6-6 Background - Brown
   Message - Yellow - Type H Reflective
5. M6-6R same as M6-6L except arrow points ahead and right.

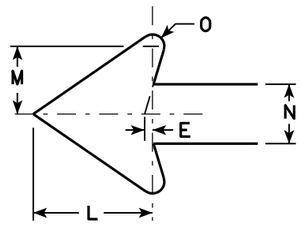

Metric equivalent for this sign is:

SIZE	
1	
2	525 mm X 525 mm
3	750 mm X 750 mm
4	750 mm X 750 mm
5	750 mm X 750 mm

SIZE	A	B	C	D	E	F	G	H	I	J	K	L	M	N	O	P	Q	R	S	T	U	V	W	X	Y	Z	Area sq. ft.	Area m2
1																												
2	21		1 1/8	3/8	3/8		7 1/2	8 3/4	4 1/4			5 1/4	3	2 5/8	1/2						1 1/2	1/2					3.06	0.28
3	30		1 3/8	1/2	5/8		10 3/4	12 1/2	6 3/4			7 1/2	4 1/4	3 3/4	3/4						1 7/8	1/2					6.25	0.56
4	30		1 3/8	1/2	5/8		10 3/4	12 1/2	6 3/4			7 1/2	4 1/4	3 3/4	3/4						1 7/8	1/2					6.25	0.56
5	30		1 3/8	1/2	5/8		10 3/4	12 1/2	6 3/4			7 1/2	4 1/4	3 3/4	3/4						1 7/8	1/2					6.25	0.56

STANDARD SIGN M6-4 & M6-6 SERIES

WISCONSIN DEPT OF TRANSPORTATION

APPROVED Matthew R Rauch for State Traffic Engineer

DATE 3/16/10 PLATE NO. M6-4.7

PROJECT NO:	HWY:	COUNTY:		SHEET NO: 151	E

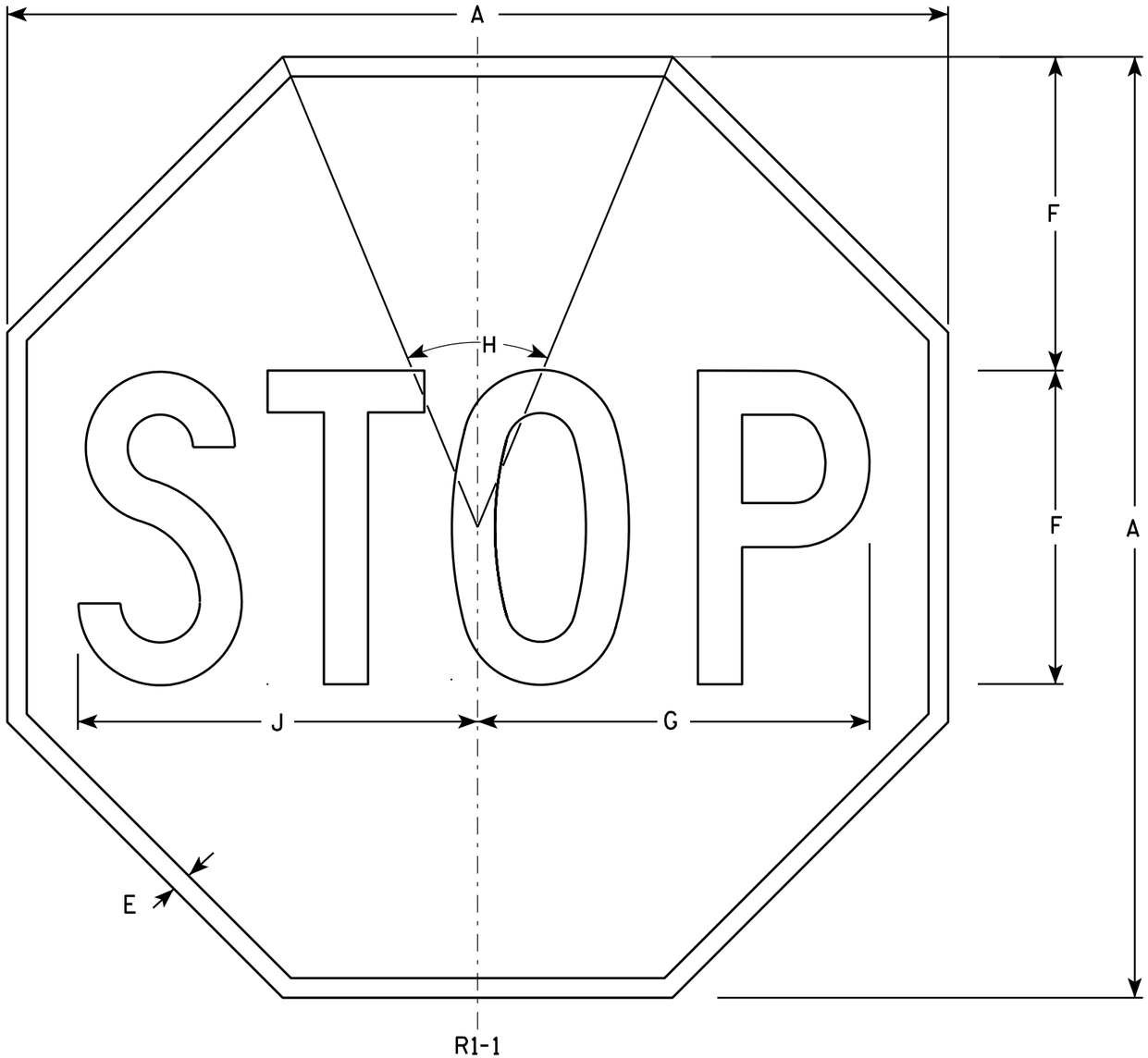

NOTES

1. Sign is Type II - Type H Reflective - reference WIS DOT Standard Specification for HIGHWAY and STRUCTURE CONSTRUCTION latest edition.
2. Color:
   Background - Red
   Message - White
3. Message Series - C

SIZE	A	B	C	D	E	F	G	H	I	J	K	L	M	N	O	P	Q	R	S	T	U	V	W	X	Y	Z	Area sq. ft.
1	24				3/8	8	10	45°		10 1/4																	3.31
2S	30				5/8	10	12 1/2	45°		12 3/4																	5.18
2M	36				3/4	12	15	45°		15 3/8																	7.46
3	36				3/4	12	15	45°		15 3/8																	7.46
4	48				1	16	20	45°		20 1/2																	13.25
5	48				1	16	20	45°		20 1/2																	13.25
6	18				3/8	6	7 3/4	45°		7 3/4																	1.86
7	12				1/4	4	5	45°		5 1/8																	0.78

STANDARD SIGN
R1-1

WISCONSIN DEPT OF TRANSPORTATION

APPROVED Matthew R Rauch
for State Traffic Engineer

DATE 12/03/10 PLATE NO. R1-1.12

PROJECT NO:	HWY:	COUNTY:		SHEET NO: 152	E

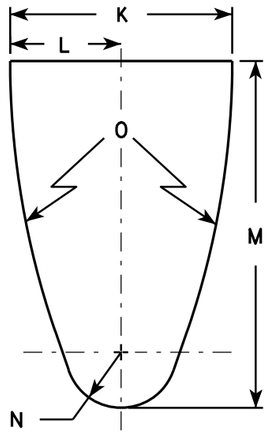

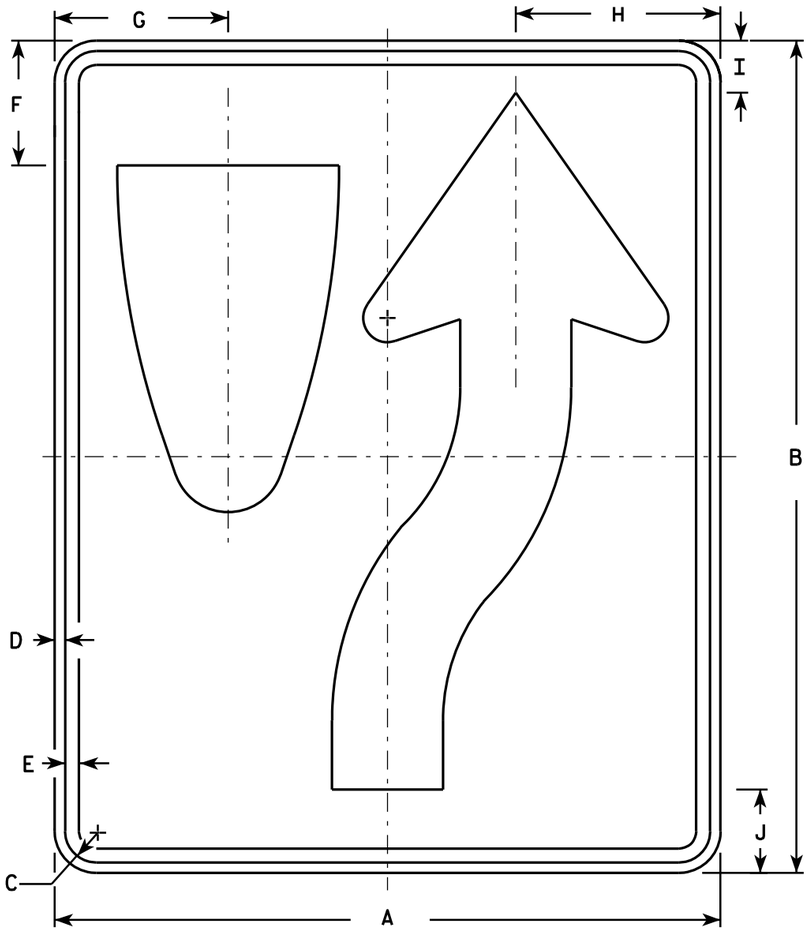

R4-7

NOTES

1. Sign is Type II - Type H Reflective - reference WIS DOT Standard Specification for HIGHWAY and STRUCTURE CONSTRUCTION latest edition. material is plywood but borders shall be rounded
2. Color:
   Background - White
   Message - Black
3. Corners may be square or rounded when base as shown. When base material is metal, the corners and borders shall be rounded.
4. R4-8 is the same as R4-7 except Legend is reversed.

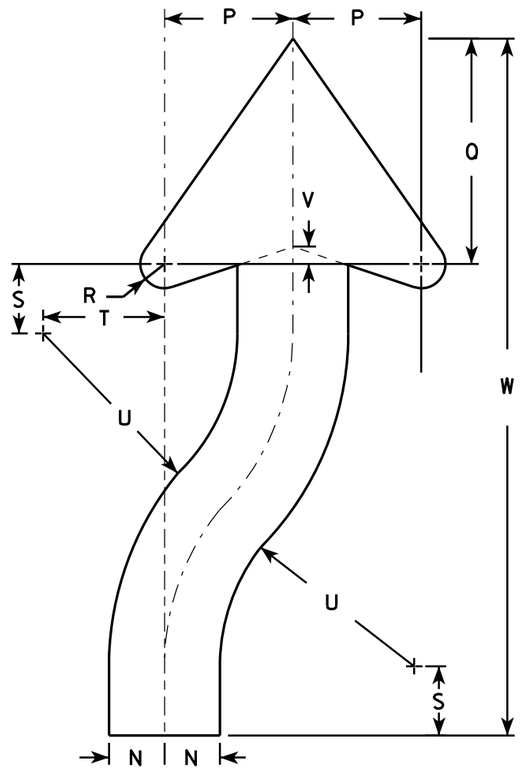

ARROW DETAIL

SIZE	A	B	C	D	E	F	G	H	I	J	K	L	M	N	O	P	Q	R	S	T	U	V	W	X	Y	Z	Area sq. ft.
1	18	24	1 1/8	3/8	1/2	3 3/8	4 3/4	5 1/2	1 3/8	2 1/4	6	3	9 3/8	1 1/2	22 1/2	3 1/2	6 1/8	5/8	1 7/8	3 1/4	6 3/4	1/2	20 3/8				3.0
2S	24	30	1 1/8	3/8	1/2	4 1/2	6 1/4	7 3/8	1 7/8	3	8	4	12 1/2	2	30	4 5/8	8 1/8	7/8	2 1/2	4 3/8	9	5/8	25 1/8				5.0
2M	24	30	1 1/8	3/8	1/2	4 1/2	6 1/4	7 3/8	1 7/8	3	8	4	12 1/2	2	30	4 5/8	8 1/8	7/8	2 1/2	4 3/8	9	5/8	25 1/8				5.0
3	36	48	1 3/4	1/2	5/8	6 3/4	9 3/8	11 1/8	2 7/8	4 1/2	12	6	18 3/4	3	45	6 7/8	12 1/4	1 1/4	3 3/4	6 5/8	13 1/2	1	40 3/4				12.0
4	36	48	1 3/4	1/2	5/8	6 3/4	9 3/8	11 1/8	2 7/8	4 1/2	12	6	18 3/4	3	45	6 7/8	12 1/4	1 1/4	3 3/4	6 5/8	13 1/2	1	40 3/4				12.0
5	48	60	2 1/4	3/4	1	9	12 1/2	14 3/4	3 3/4	6	16	8	25	4	60	9 1/4	16 1/4	1 5/8	5	8 3/4	18	1 1/4	50 1/4				20.0

STANDARD SIGN
R4-7 & R4-8

WISCONSIN DEPT OF TRANSPORTATION

APPROVED Matthew R Rauch for State Traffic Engineer

DATE 3/25/2011 PLATE NO. R4-7.8

PROJECT NO:	HWY:	COUNTY:		SHEET NO: 153	E

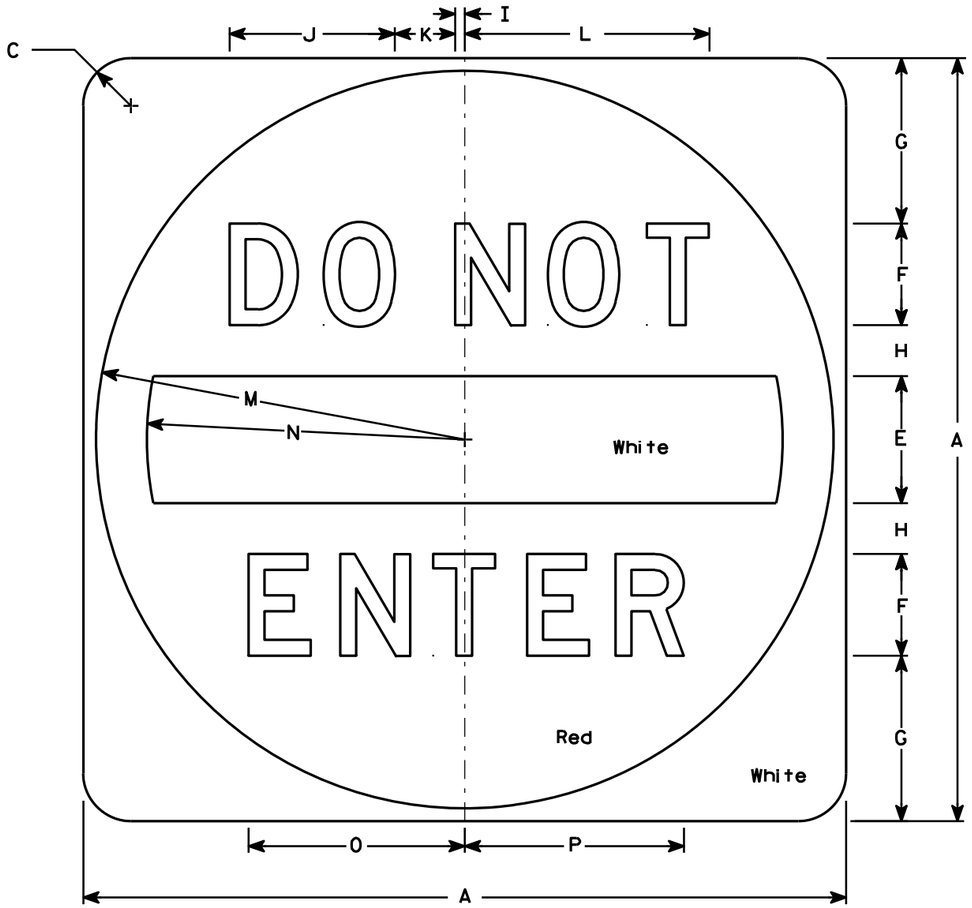

R5-1

NOTES

1. Sign is Type II - Type H Reflective - reference WIS DOT Standard Specification for HIGHWAY and STRUCTURE CONSTRUCTION latest edition.
2. Color:
   Background - See detail
   Message - White - Type H Reflective
3. Message Series - D
4. Corners may be square or rounded when base material is plywood but when base material is metal, the cornors shall be rounded.

SIZE	A	B	C	D	E	F	G	H	I	J	K	L	M	N	O	P	Q	R	S	T	U	V	W	X	Y	Z	Area sq. ft.
1																											
2S	30		1 7/8		5	4	6 1/2	2	3/8	6 1/2	2 3/8	9 5/8	14 1/2	12 1/2	8 1/2	8 5/8											6.26
2M	36		2 1/4		6	5	7 1/2	2 1/2	1/2	8 1/8	3	12 1/8	17 1/2	15	10 5/8	10 3/4											9.0
3	36		2 1/4		6	5	7 1/2	2 1/2	1/2	8 1/8	3	12 1/8	17 1/2	15	10 5/8	10 3/4											9.0
4	36		2 1/4		6	5	7 1/2	2 1/2	1/2	8 1/8	3	12 1/8	17 1/2	15	10 5/8	10 3/4											9.0
5	48		3		8	6	11	3	5/8	9 3/4	3 5/8	14 1/2	23 1/2	20	12 3/4	12 7/8											16.0

STANDARD SIGN
R5-1

WISCONSIN DEPT OF TRANSPORTATION

APPROVED Matthew R Rauch
for State Traffic Engineer

DATE 12/17/10 PLATE NO. R5-1.15

PROJECT NO: | HWY: | COUNTY: | SHEET NO: 154 | E

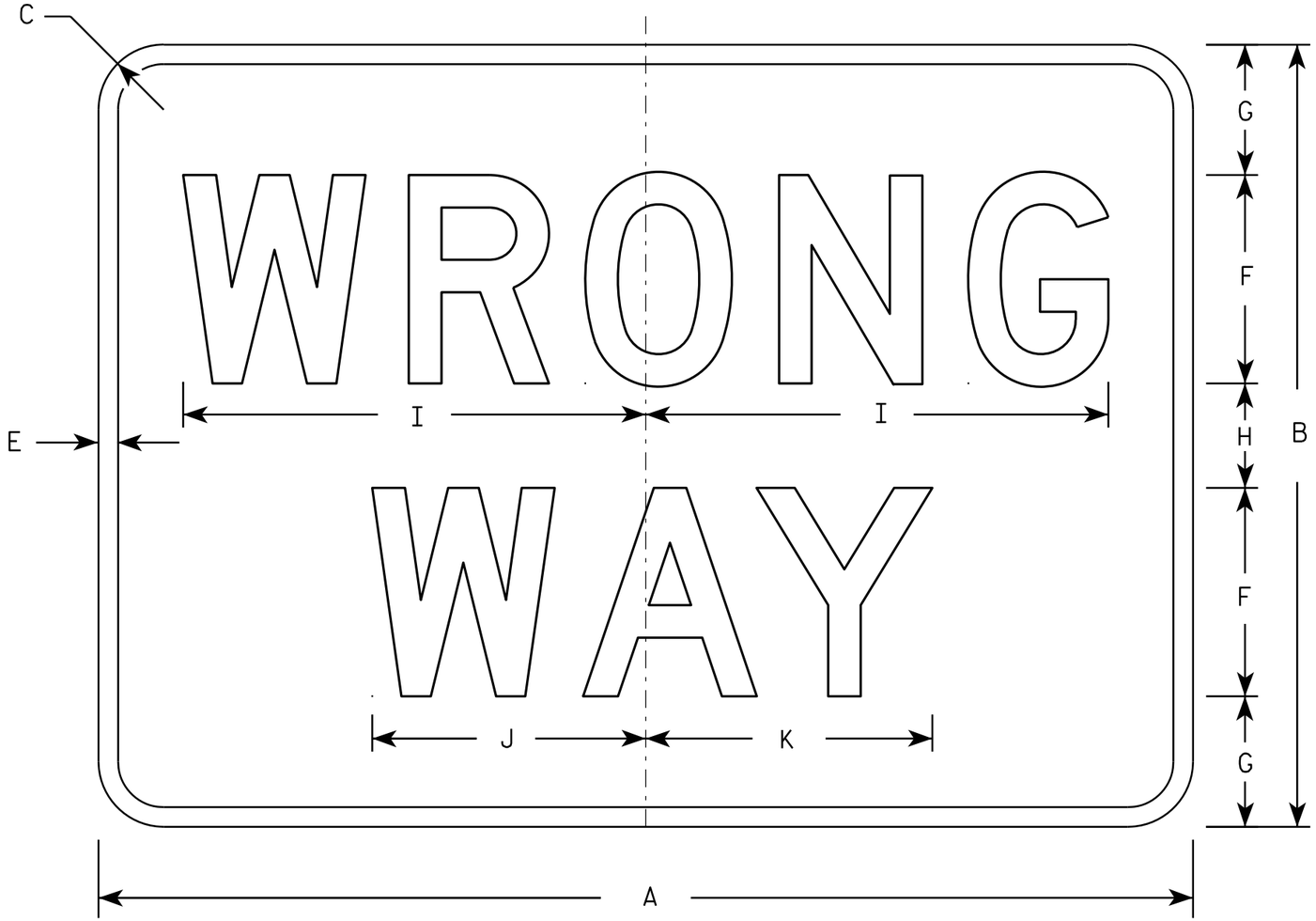

R5-1A

NOTES

1. Sign is Type II - Type H Reflective - reference WIS DOT Standard Specification for HIGHWAY and STRUCTURE CONSTRUCTION latest edition.
2. Color:
   Background - Red
   Message - White
3. Message Series - D
4. Corners may be square or rounded when base material is plywood but borders shall be rounded as shown. When base material is metal, the corners and borders shall be rounded.

SIZE	A	B	C	D	E	F	G	H	I	J	K	L	M	N	O	P	Q	R	S	T	U	V	W	X	Y	Z	Area sq. ft.
1	30	18	1 1/2		1/2	5	3	2	11	6 1/2	6 7/8																3.75
2S	36	24	2		5/8	6	4 1/2	3	13 1/4	7 7/8	8 1/4																6.00
2M	42	30	2 1/2		3/4	8	5	4	17 3/4	10 1/2	11																8.75
3	42	30	2 1/2		3/4	8	5	4	17 3/4	10 1/2	11																8.75
4	42	30	2 1/2		3/4	8	5	4	17 3/4	10 1/2	11																8.75
5	42	30	2 1/2		3/4	8	5	4	17 3/4	10 1/2	11																8.75

STANDARD SIGN
R5-1A

WISCONSIN DEPT OF TRANSPORTATION

APPROVED Matthew R Rauch
for State Traffic Engineer

DATE 12/17/10 PLATE NO. R5-1A.2

PROJECT NO: | HWY: | COUNTY: | SHEET NO: 155 | E

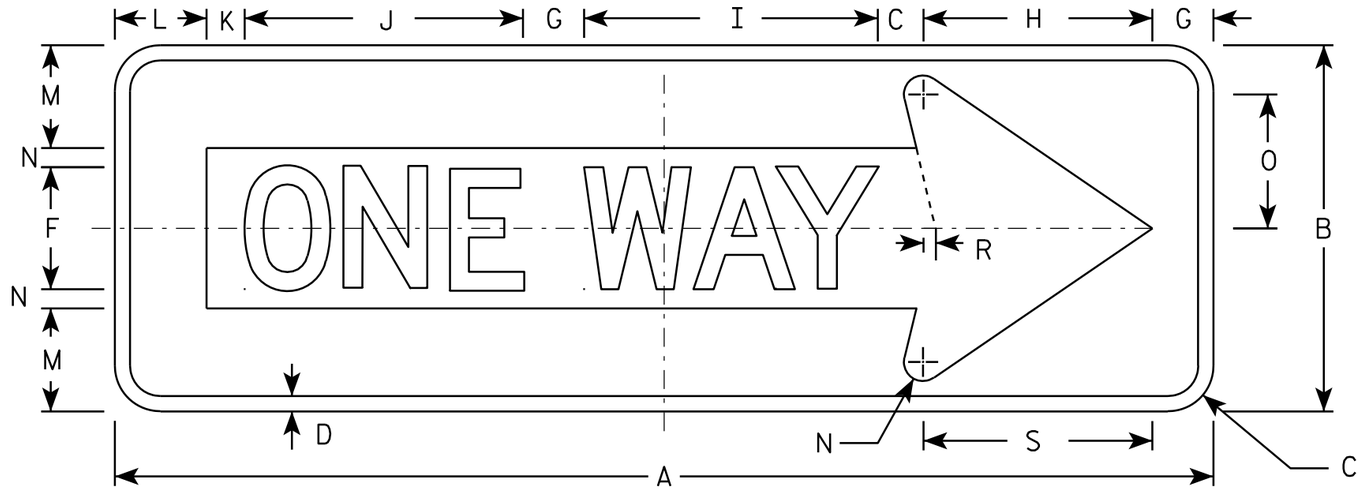

R6-1R

NOTES

1. Sign is Type II - Type H Reflective - reference WIS DOT Standard Specification for HIGHWAY and STRUCTURE CONSTRUCTION latest edition.
2. Color:
   Background - BLACK
   Message - BLACK LEGEND & WHITE ARROW & BORDER
3. Message Series - D
4. Corners may be square or rounded when base material is plywood but borders shall be rounded as shown. When base material is metal, the corners and borders shall be rounded.

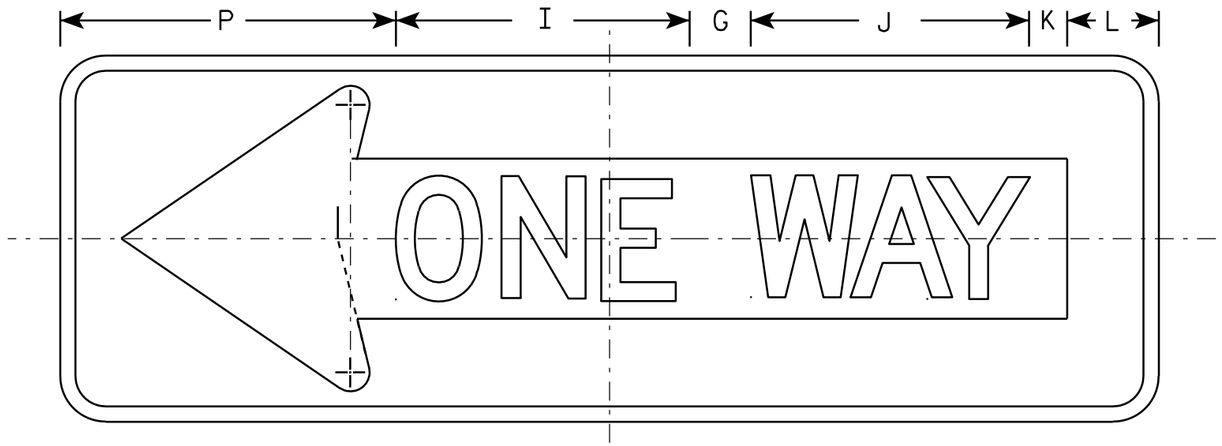

R6-1L

SIZE	A	B	C	D	E	F	G	H	I	J	K	L	M	N	O	P	Q	R	S	T	U	V	W	X	Y	Z	Area sq. ft.
1																											
2S	36	12	1 ½	½		4	2	7 ½	9 ⅝	9 ⅛	1 ¼	3	3 ⅜	⅝	4 ⅜	11		⅜	7 ½								3.0
2M	54	18	2 ¼	¾		6	3	11 ¼	14 ½	13 ⅝	1 ⅞	4 ½	5	1	6 ½	16 ½		⅝	11 ¼								6.75
3	54	18	2 ¼	¾		6	3	11 ¼	14 ½	13 ⅝	1 ⅞	4 ½	5	1	6 ½	16 ½		⅝	11 ¼								6.75
4	54	18	2 ¼	¾		6	3	11 ¼	14 ½	13 ⅝	1 ⅞	4 ½	5	1	6 ½	16 ½		⅝	11 ¼								6.75
5																											

STANDARD SIGN
R6-1 L & R

WISCONSIN DEPT OF TRANSPORTATION

APPROVED Matthew R Rauch
for State Traffic Engineer

DATE 12/17/10 PLATE NO. R6-1.2

PROJECT NO:

SHEET NO: 156 E

7

7

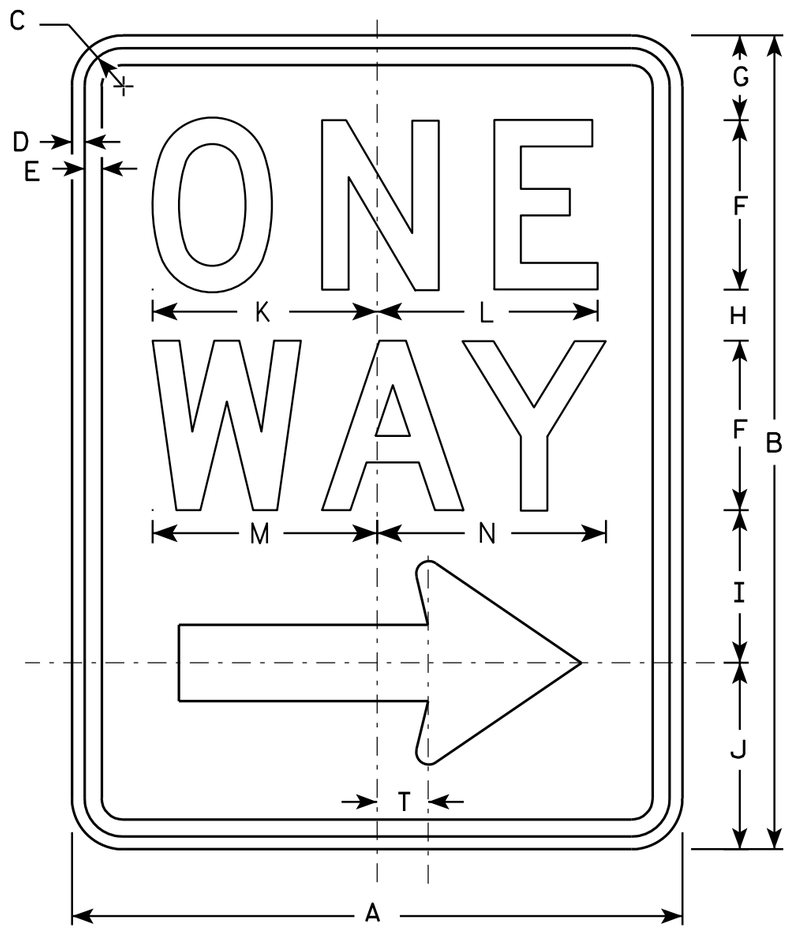

R6-2R

NOTES

1. Sign is Type II - Type H Reflective - reference WIS DOT Standard Specification for HIGHWAY and STRUCTURE CONSTRUCTION latest edition.
2. Color:
   Background - White
   Message - Black
3. Message Series - D
4. Corners may be square or rounded when base material is plywood but borders shall be rounded as shown. When base material is metal, the corners and borders shall be rounded.
5. R6-2L same as R6-2R except arrow points to the left.

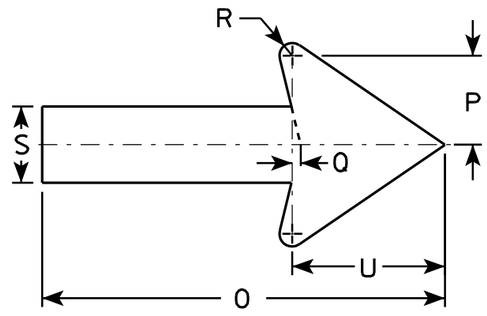

SIZE	A	B	C	D	E	F	G	H	I	J	K	L	M	N	O	P	O	R	S	T	U	V	W	X	Y	Z
1	18	24	1 1/8	3/8	1/2	5	2 1/2	1 1/2	4 1/2	5 1/2	6 5/8	6 1/2	6 5/8	6 3/4	11 7/8	2 5/8	1/4	3/8	2 1/4	1 1/2	4 1/2					
2S	24	30	1 1/8	3/8	1/2	6	3	2 1/2	5 1/2	7	8 1/8	8 1/8	8 1/2	8 5/8	16	3 1/2	3/8	1/2	3	2	6					
2M	30	36	1 3/8	1/2	5/8	8	2 1/2	2 5/8	6 7/8	8	10 1/2	10 1/2	11 1/4	11 1/4	20	4 3/8	1/2	5/8	3 3/4	2 1/2	7 1/2					
3	36	48	1 7/8	1/2	5/8	10	5 1/4	3 1/4	9	10 1/2	12 3/4	12 3/4	13 1/4	13 1/2	24	5 5/8	1/2	3/4	4 3/4	3	9					
4	36	48	1 7/8	1/2	5/8	10	5 1/4	3 1/4	9	10 1/2	12 3/4	12 3/4	13 1/4	13 1/2	24	5 5/8	1/2	3/4	4 3/4	3	9					
5																										

STANDARD SIGN
R6-2 R&L

WISCONSIN DEPT OF TRANSPORTATION

APPROVED Matthew R Rauch
for State Traffic Engineer

DATE 11/2/10 PLATE NO. R6-2.8

PROJECT NO:	HWY:	COUNTY:		SHEET NO: 157	E

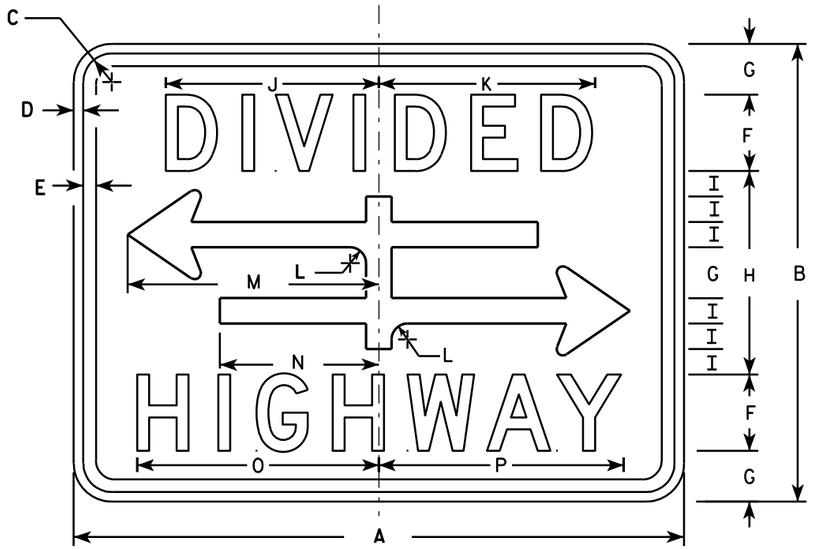

R6-3

NOTES

1. Sign is Type II - Type H Reflective - reference WIS DOT Standard Specification for HIGHWAY and STRUCTURE CONSTRUCTION latest edition.
2. Color:
   Background - White
   Message - Black
3. Message Series - D
4. Corners may be square or rounded when base material is plywood but borders shall be rounded as shown. When base material is metal, the corners and borders shall be rounded.

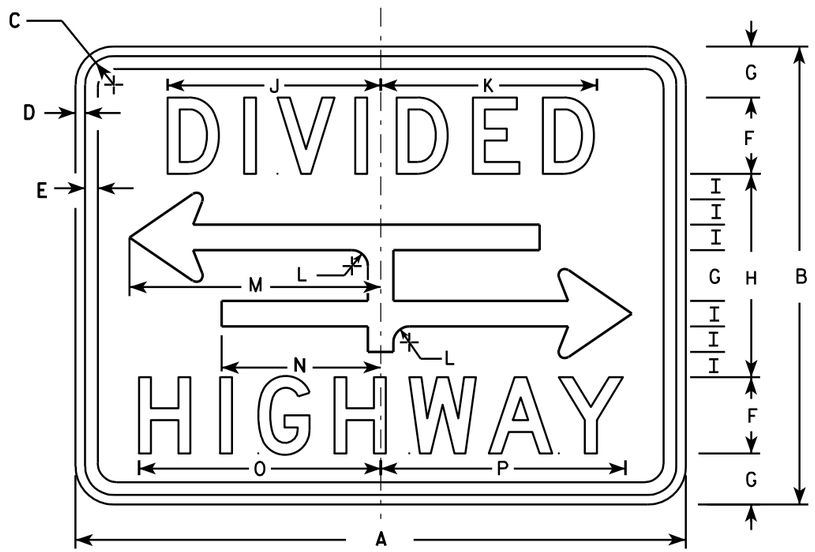

R6-3A

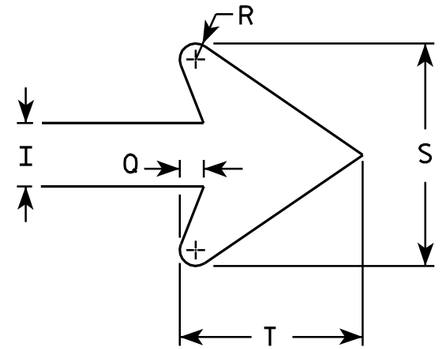

ARROW DETAIL

SIZE	A	B	C	D	E	F	G	H	I	J	K	L	M	N	O	P	Q	R	S	T	U	V	W	X	Y	Z	Area sq. ft.
1	24	18	1 1/8	3/8	3/8	3	2	8	1	8 3/8	8 1/2	5/8	9 7/8	6 1/4	9 1/2	9 5/8	3/8	1/4	3 1/2	2 3/4							3.0
2S	30	24	1 1/8	3/8	1/2	4	2 5/8	10 3/4	1 3/8	10 1/2	10 5/8	7/8	12 1/2	7 7/8	12 1/4	12 3/8	1/2	3/8	4 5/8	3 5/8							5.0
2M	30	24	1 1/8	3/8	1/2	4	2 5/8	10 3/4	1 3/8	10 1/2	10 5/8	7/8	12 1/2	7 7/8	12 1/4	12 3/8	1/2	3/8	4 5/8	3 5/8							5.0
3																											
4																											
5																											

STANDARD SIGN
R6-3 & R6-3A

WISCONSIN DEPT OF TRANSPORTATION

APPROVED Matthew R Rauch
for State Traffic Engineer

DATE 3/31/2011 PLATE NO. R6-3.5

PROJECT NO:

SHEET NO: 158 E

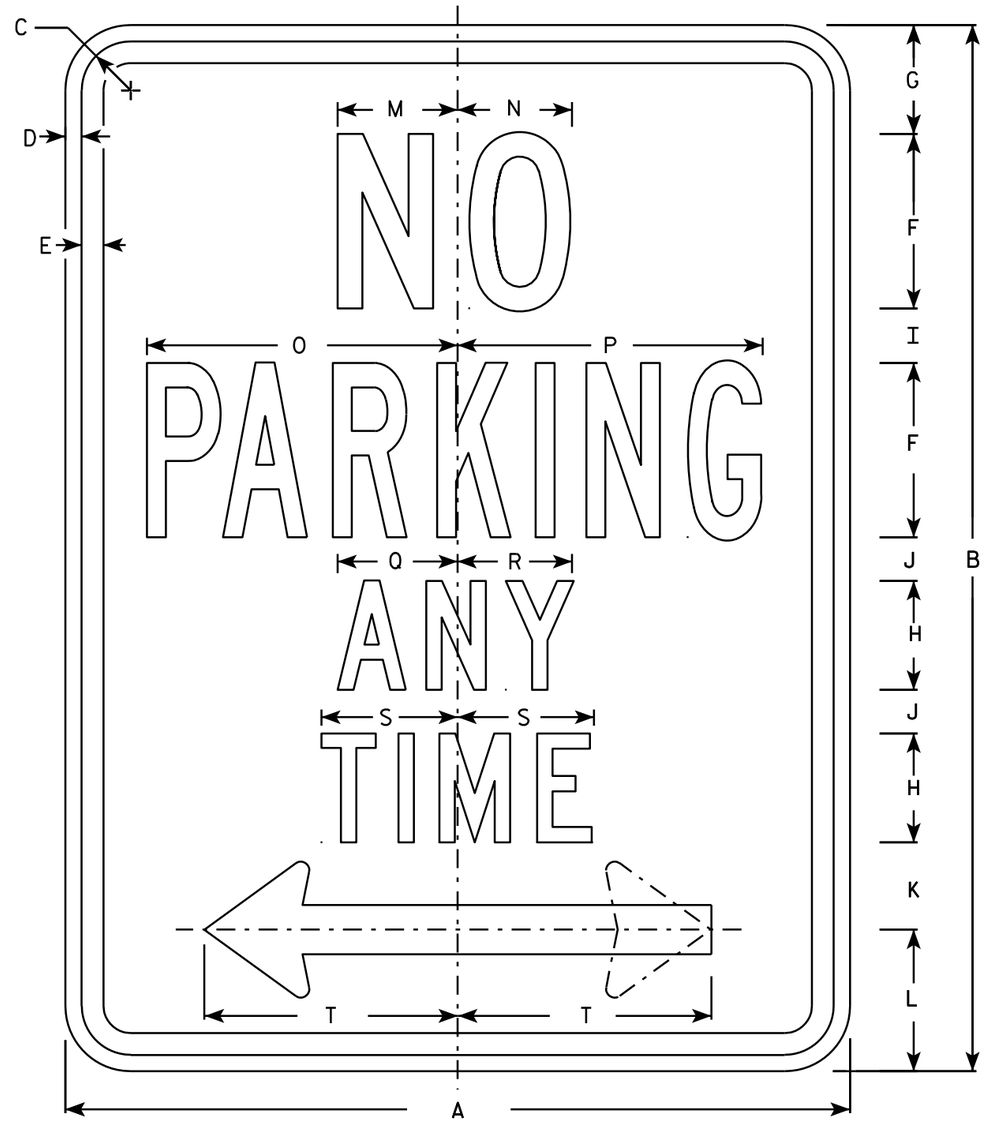

R7-1

NOTES

1. Sign is Type II - Type H Reflective - reference WIS DOT Standard Specification for HIGHWAY and STRUCTURE CONSTRUCTION latest edition.
2. Color:
   Background - White
   Message - Red
3. Message Series - See Note 5
4. Corners may be square or rounded when base material is plywood but borders shall be rounded as shown. When base material is metal, the corners and borders shall be rounded.
5. Lines 1, 3 and 4 are series C, line 2 is series B.
6. R7-1D (double arrow)
   R7-1L (left arrow)
   R7-1R (right arrow)

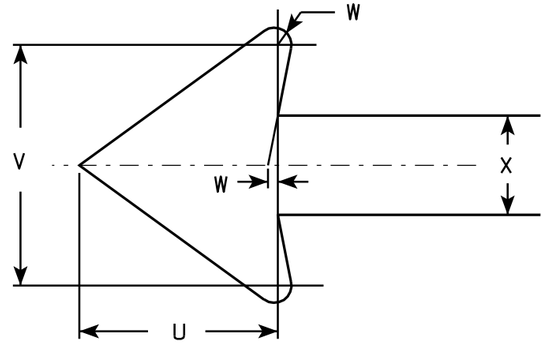

SIZE	A	B	C	D	E	F	G	H	I	J	K	L	M	N	O	P	Q	R	S	T	U	V	W	X	Y	Z	Area sq. ft.
1	12	18	1 1/8	3/8	3/8	3	1 7/8	2	7/8	5/8	1 1/2	2 1/2	2	2	4 7/8	4 7/8	2 1/4	2 1/8	2 1/2	3 7/8	1 1/2	1 3/4	1/8	3/4			1.5
2S	18	24	1 1/8	3/8	1/2	4	2 1/2	2 1/2	1 1/4	1	2	3 1/4	2 3/4	2 5/8	7 1/8	7	2 3/4	2 5/8	3 1/8	5 7/8	2 1/4	2 5/8	1/4	1 1/8			3.0
2M	24	30	1 1/8	3/8	1/2	5	3	3	2	1 1/4	2 1/2	4	3 1/4	3 3/8	9 1/4	9 1/4	3 1/4	3 1/4	3 3/4	7 3/4	3	3 1/2	1/4	1 1/2			5.0
3	24	30	1 1/8	3/8	1/2	5	3	3	2	1 1/4	2 1/2	4	3 1/4	3 3/8	9 1/4	9 1/4	3 1/4	3 1/4	3 3/4	7 3/4	3	3 1/2	1/4	1 1/2			5.0
4																											
5																											

STANDARD SIGN
R7-1

WISCONSIN DEPT OF TRANSPORTATION

APPROVED Matthew R Rauch
for State Traffic Engineer

DATE 3/31/2011 PLATE NO. R7-1.9

PROJECT NO:	HWY:	COUNTY:		SHEET NO: 159	E

NOTES

1. Sign is Type II - Type F Reflective - reference WIS DOT Standard Specification for HIGHWAY and STRUCTURE CONSTRUCTION latest edition.
2. Color:
   Background - Yellow
   Message - Black
3. Corners may be square or rounded when base material is plywood but borders shall be rounded as shown. When base material is metal, the corners and borders shall be rounded.
4. W1-2L is the same as W1-2R except the arrow is reversed along the vertical centerline.

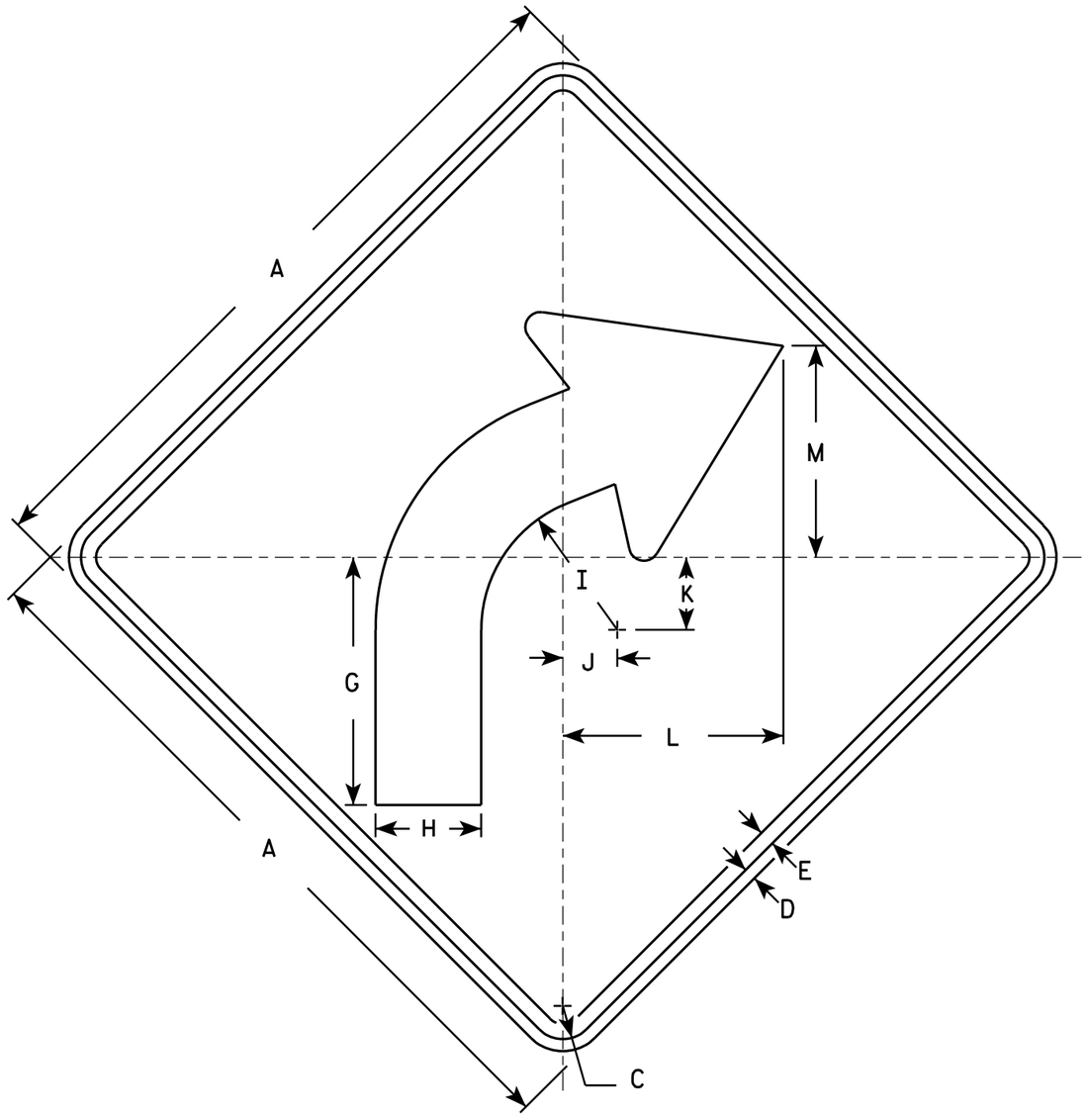

W1-2R

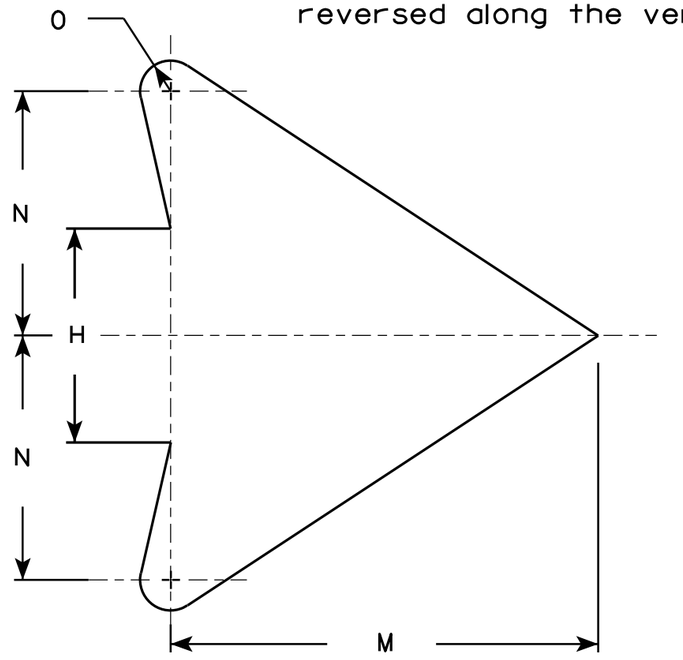

ARROW DETAIL

SIZE	A	B	C	D	E	F	G	H	I	J	K	L	M	N	O	P	Q	R	S	T	U	V	W	X	Y	Z	Area sq. ft.
1	24		1 1/8	3/8	1/2		8 1/4	3 1/2	4 1/2	1 3/4	2 3/8	7 1/4	7	4	1/2												4.0
2S	30		1 3/8	1/2	5/8		10 1/4	4 3/8	5 5/8	2 1/4	3	9 1/8	8 3/4	5	5/8												6.25
2M	36		1 5/8	5/8	3/4		12 3/8	5 1/4	6 3/4	2 5/8	3 1/2	10 7/8	10 1/2	6	3/4												9.0
3	36		1 5/8	5/8	3/4		12 3/8	5 1/4	6 3/4	2 5/8	3 1/2	10 7/8	10 1/2	6	3/4												9.0
4	36		1 5/8	5/8	3/4		12 3/8	5 1/4	6 3/4	2 5/8	3 1/2	10 7/8	10 1/2	6	3/4												9.0
5	48		2 1/4	3/4	1		16 1/2	7	9	3 1/2	4 5/8	14 1/2	14	8	1												16.0

STANDARD SIGN
W1-2

WISCONSIN DEPT OF TRANSPORTATION

APPROVED Matthew R Rauch for State Traffic Engineer

DATE 5/15/12 PLATE NO. W1-2.10

PROJECT NO:	HWY:	COUNTY:		SHEET NO: 160	E

NOTES

1. Sign is Type II - Type F Reflective - reference WIS DOT Standard Specification for HIGHWAY and STRUCTURE CONSTRUCTION latest edition.
2. Color:
   Background - Yellow
   Message - Black
3. Message Series - See note 5
4. Corners and borders shall be rounded on all base materials for this sign.
5. Lines 1 and 2 are Series D.
   Line 3 is series C.

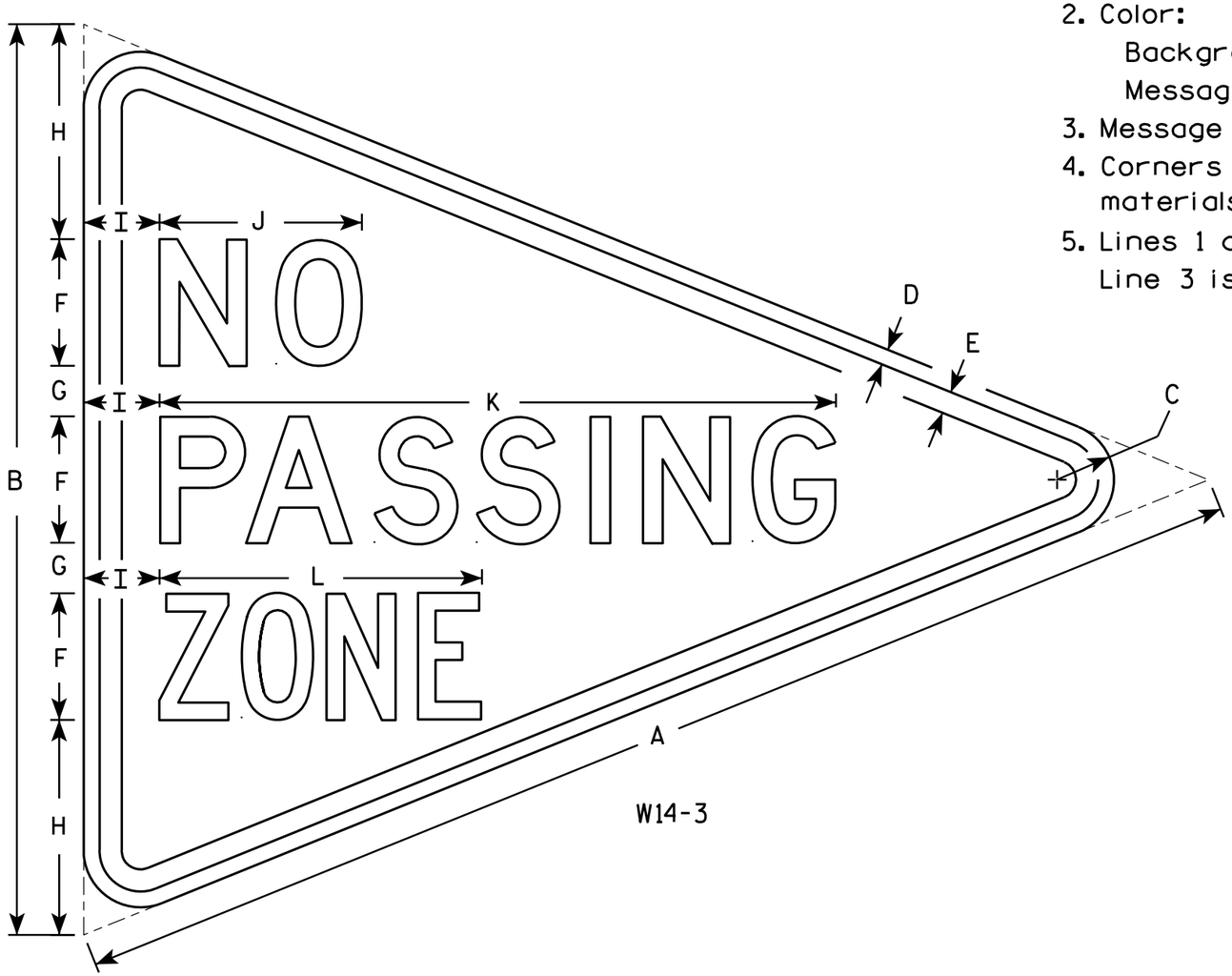

W14-3

SIZE	A	B	C	D	E	F	G	H	I	J	K	L	M	N	O	P	O	R	S	T	U	V	W	X	Y	Z	Area sq. ft.
1																											
2S	48	36	2 1/4	5/8	7/8	5	2	8 1/2	3	8	26 3/4	12 3/4															6.0
2M	48	36	2 1/4	5/8	7/8	5	2	8 1/2	3	8	26 3/4	12 3/4															6.0
3	64	48	3	3/4	1 1/4	6	3	12	4	10 3/4	33 5/8	16 1/2															10.7
4																											
5																											

STANDARD SIGN
W14-3

WISCONSIN DEPT OF TRANSPORTATION

APPROVED Matthew R Rauch
for State Traffic Engineer

DATE 6/7/10 PLATE NO. W14-3.9

PROJECT NO:	HWY:	COUNTY:		SHEET NO: 161	E

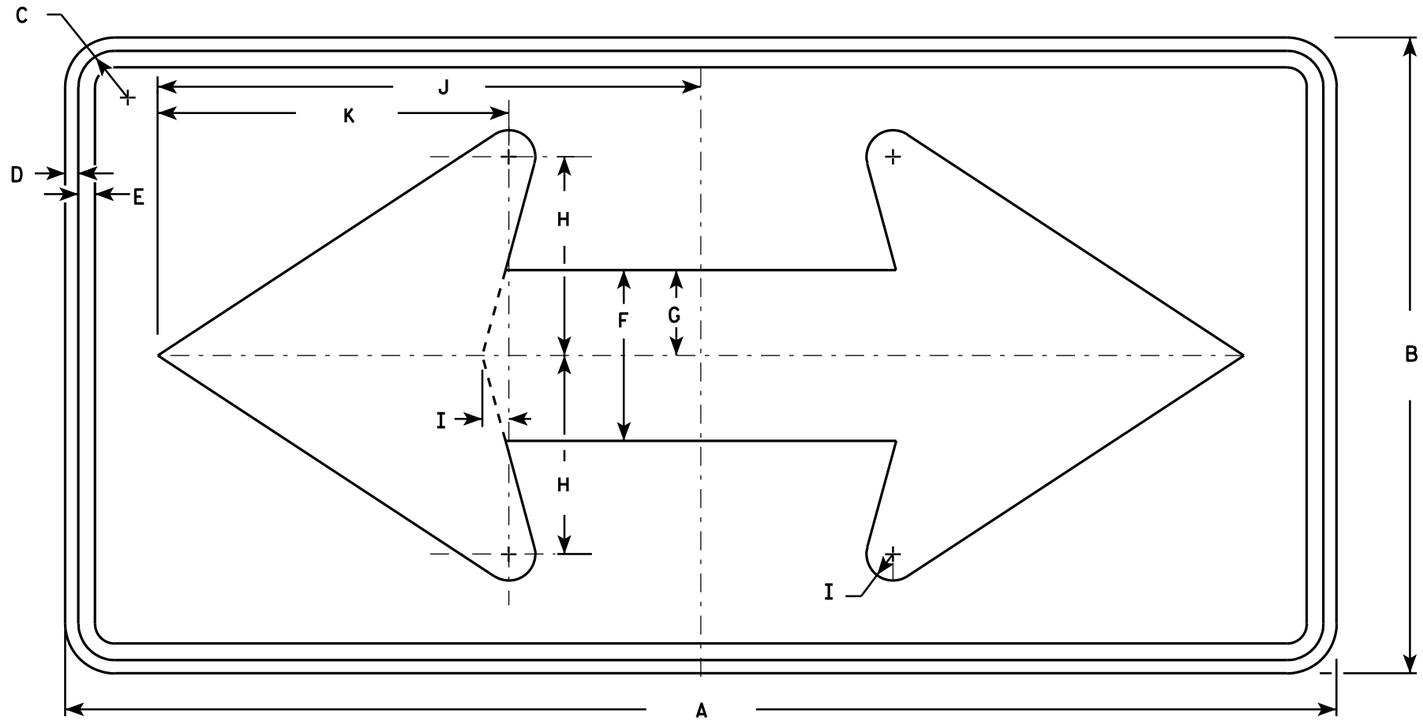

W1-7

NOTES

1. Sign is Type II - Type F Reflective - reference WIS DOT Standard Specification for HIGHWAY and STRUCTURE CONSTRUCTION latest edition.
2. Color:
   Background - Yellow
   Message - Black
3. Corners may be square or rounded when base material is plywood but borders shall be rounded as shown. When base material is metal, the corners and borders shall be rounded.

SIZE	A	B	C	D	E	F	G	H	I	J	K	L	M	N	O	P	Q	R	S	T	U	V	W	X	Y	Z	Area sq. ft.
1	36	18	1 1/8	3/8	1/2	5	2 1/2	5 3/4	3/4	15 5/8	10 1/8																4.5
2S	48	24	1 3/8	1/2	5/8	6 1/2	3 1/4	7 1/2	1	20 1/2	13 1/4																8.0
2M	48	24	1 3/8	1/2	5/8	6 1/2	3 1/4	7 1/2	1	20 1/2	13 1/4																8.0
3	60	30	1 3/8	1/2	5/8	8	4	9 1/4	1 1/4	25 3/8	16 1/4																12.5
4	60	30	1 3/8	1/2	5/8	8	4	9 1/4	1 1/4	25 3/8	16 1/4																12.5
5	96	48	2 1/4	3/4	1	13	6 1/2	15	2	41	26 1/2																32.0

STANDARD SIGN
W1-7

WISCONSIN DEPT OF TRANSPORTATION

APPROVED Matthew R Rauch
for State Traffic Engineer

DATE 6/7/10 PLATE NO. W1-7.7

PROJECT NO: | HWY: | COUNTY: | SHEET NO: 162 | E

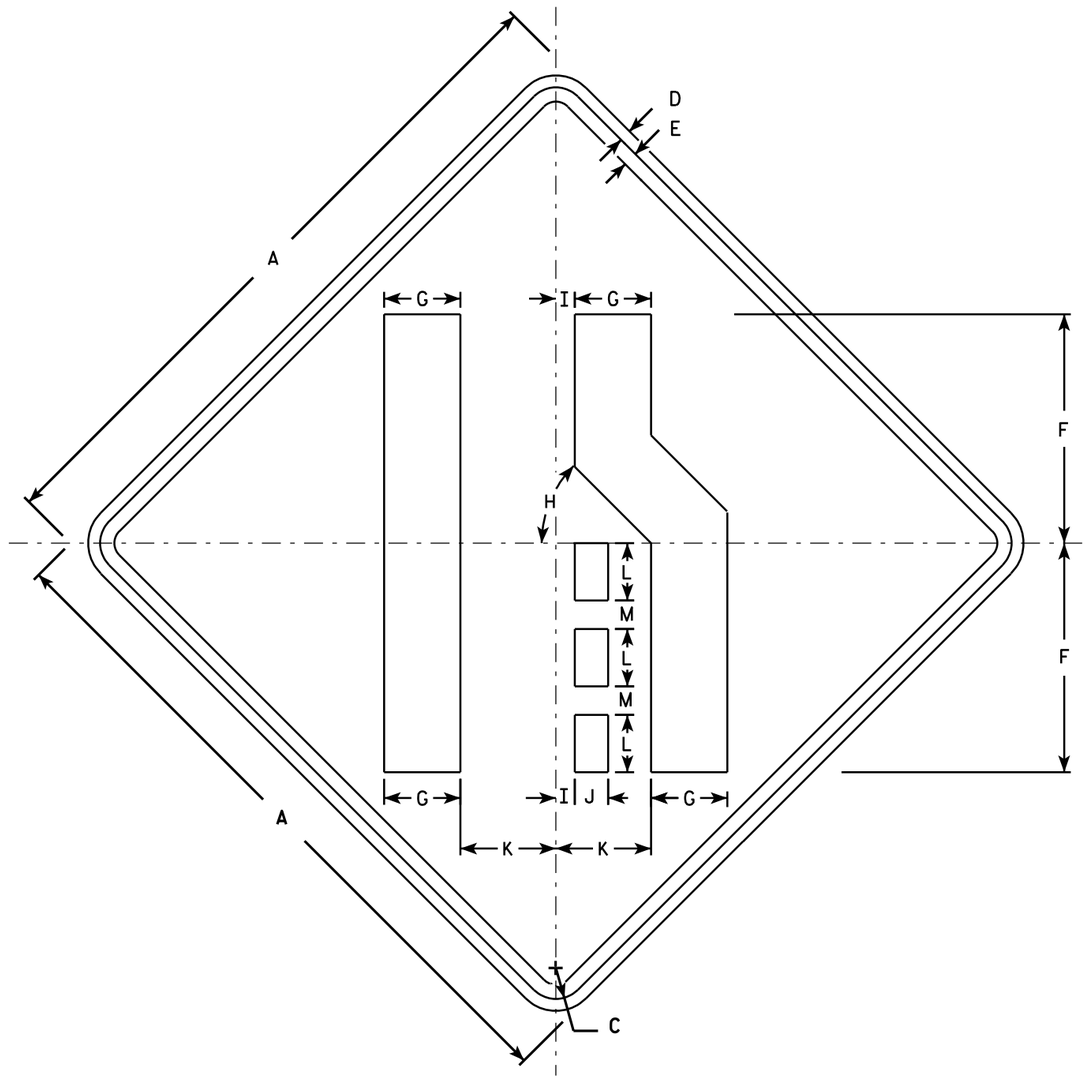

W4-2R

NOTES

1. Sign is Type II - Type H Reflective - reference WIS DOT Standard Specification for HIGHWAY and STRUCTURE CONSTRUCTION latest edition.
2. Color:
   Background - Yellow
   Message - Black
3. Corners may be square or rounded when base material is plywood but borders shall be rounded as shown. When base material is metal, the corners and borders shall be rounded.
4. W4-2L is the same as W4-2R except the symbol is reversed along the vertical centerline.

SIZE	A	B	C	D	E	F	G	H	I	J	K	L	M	N	O	P	Q	R	S	T	U	V	W	X	Y	Z	Area sq. ft.
1	30		1 3/8	1/2	5/8	10	3 3/8	45°	7/8	1 1/2	4 1/4	2 1/2	1 1/4														6.25
2S	36		1 5/8	5/8	3/4	12	4	45°	1	1 3/4	5	3	1 1/2														9.0
2M	36		1 5/8	5/8	3/4	12	4	45°	1	1 3/4	5	3	1 1/2														9.0
3	36		1 5/8	5/8	3/4	12	4	45°	1	1 3/4	5	3	1 1/2														9.0
4	48		2 1/4	3/4	1	16	5 3/8	45°	1 1/4	2 3/8	6 3/4	4	2														16.0
5	48		2 1/4	3/4	1	16	5 3/8	45°	1 1/4	2 3/8	6 3/4	4	2														16.0

STANDARD SIGN
W4-2

WISCONSIN DEPT OF TRANSPORTATION

APPROVED Matthew R Rauch
for State Traffic Engineer

DATE 2/29/2012 PLATE NO. W4-2.13

PROJECT NO:

SHEET NO: 163 E

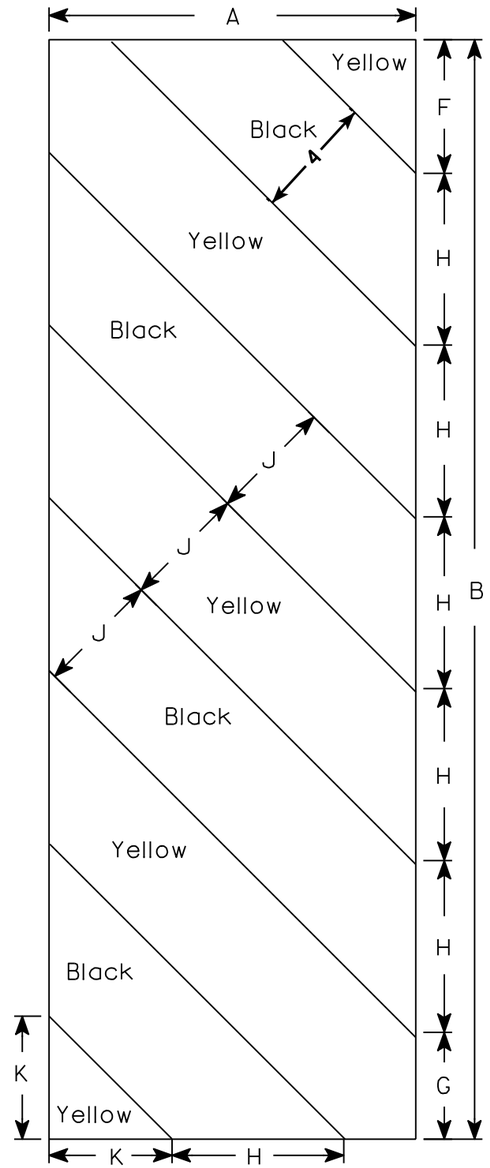

W5-52L

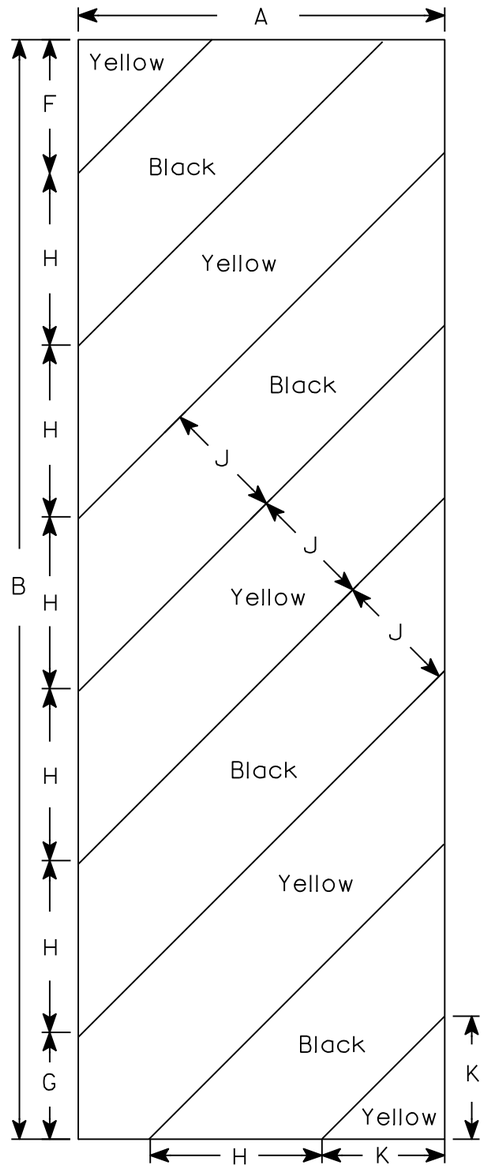

W5-52R

NOTES

1. Sign is Type II - Type F Reflective - reference WIS DOT Standard Specification for HIGHWAY and STRUCTURE CONSTRUCTION latest edition.
2. Color:
   Background - Yellow
   Message - Black
3. Corners may be square or rounded when base material is plywood but borders shall be rounded as shown. When base material is metal, the corners and borders shall be rounded.
4. Alternate colors of stripes as shown.

SIZE	A	B	C	D	E	F	G	H	I	J	K	L	M	N	O	P	Q	R	S	T	U	V	W	X	Y	Z	Area sq. ft.
1																											
2S	12	36				4 3/8	3 1/2	5 5/8	45°	4	4																3.0
2M	12	36				4 3/8	3 1/2	5 5/8	45°	4	4																3.0
3	18	54				6	5 1/2	8 1/2	45°	6	6 9/16																6.75
4																											
5																											

STANDARD SIGN

W5-52L & W5-52R

WISCONSIN DEPT OF TRANSPORTATION

APPROVED Matthew R Rauch
for State Traffic Engineer

DATE 5/29/12 PLATE NO. W5-52.9

PROJECT NO:	HWY:	COUNTY:		SHEET NO: 164	E

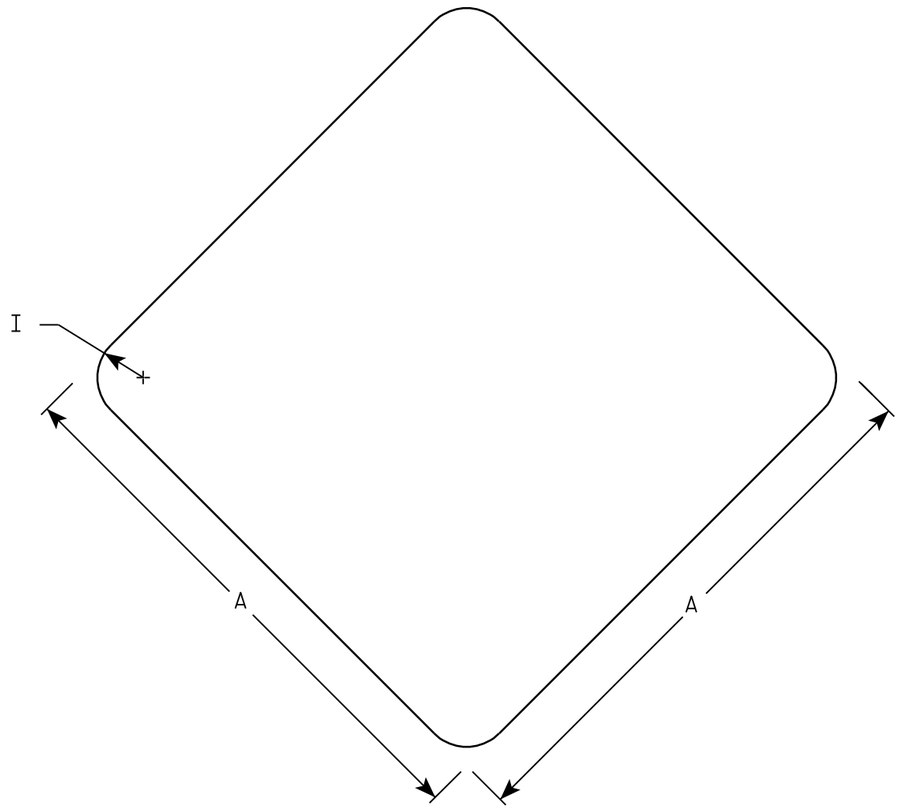

W5-54

NOTES

1. Sign is Type II - Type F Reflective - reference WIS DOT Standard Specification for HIGHWAY and STRUCTURE CONSTRUCTION latest edition.
2. Color:
   Background - Yellow
3. Corners may be square or rounded when base material is plywood. When base material is metal the corners shall be rounded.

SIZE	A	B	C	D	E	F	G	H	I	J	K	L	M	N	O	P	Q	R	S	T	U	V	W	X	Y	Z	Area sq. ft.
1	12								1																		1.0
2S	18								1 ½																		2.25
2M	18								1 ½																		2.25
3																											
4																											
5																											

STANDARD SIGN
W5-54

WISCONSIN DEPT OF TRANSPORTATION

APPROVED Matthew R Rauch
for State Traffic Engineer

DATE 11/3/10 PLATE NO. W5-54.8

PROJECT NO: | HWY: | COUNTY: | SHEET NO: 165 | E

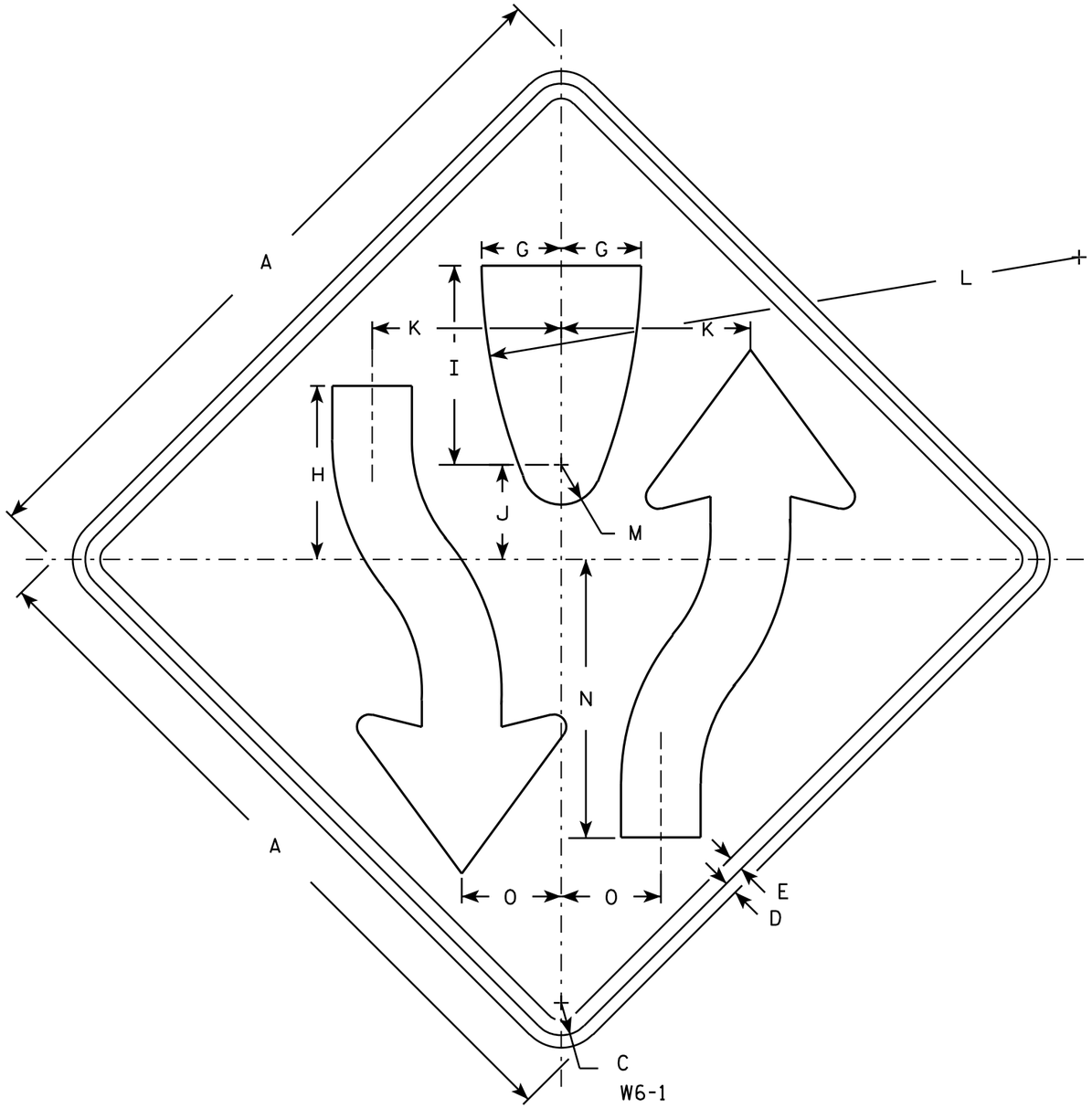

NOTES

1. Sign is Type II - Type H Reflective - reference WIS DOT Standard Specification for HIGHWAY and STRUCTURE CONSTRUCTION latest edition.
2. Color:
   Background - Yellow
   Message - Black
3. Corners may be square or rounded when base material is plywood but borders shall be rounded as shown. When base material is metal, the corners and borders shall be rounded.
4. W6-2 same as W6-1 but is rotated 180° when mounted.

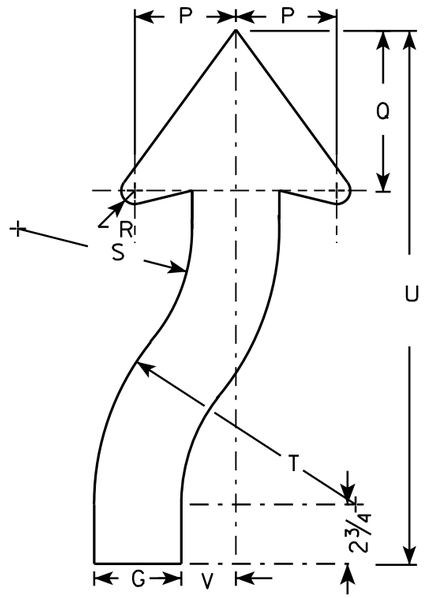

ARROW DETAIL

SIZE	A	B	C	D	E	F	G	H	I	J	K	L	M	N	O	P	Q	R	S	T	U	V	W	X	Y	Z	Area sq. ft.
1	30		1 3/8	1/2	5/8		3 1/4	8	8 1/4	4 1/8	7 7/8	25	1 3/4	11 5/8	4 1/8	3 7/8	6 3/4	5/8	6 5/8	9 7/8	21 5/8	2					6.25
2S	36		1 5/8	5/8	3/4		4	8 3/4	10	4 3/4	9 1/2	30	2	14	5	4 5/8	7 3/8	7/8	8	12	24 1/2	2 1/2					9.0
2M	36		1 5/8	5/8	3/4		4	8 3/4	10	4 3/4	9 1/2	30	2	14	5	4 5/8	7 3/8	7/8	8	12	24 1/2	2 1/2					9.0
3																											
4	48		2 1/4	3/4	1		5 3/8	11 5/8	13 3/8	6 3/8	12 5/8	40	2 5/8	18 5/8	6 5/8	6 1/4	9 7/8	1 1/4	10 5/8	16	32 5/8	3 3/8					16.0
5	48		2 1/4	3/4	1		5 3/8	11 5/8	13 3/8	6 3/8	12 5/8	40	2 5/8	18 5/8	6 5/8	6 1/4	9 7/8	1 1/4	10 5/8	16	32 5/8	3 3/8					16.0

STANDARD SIGN
W6-1 & W6-2

WISCONSIN DEPT OF TRANSPORTATION

APPROVED Matthew R Rauch
for State Traffic Engineer

DATE 3/22/11 PLATE NO. W6-1.13

PROJECT NO:	HWY:	COUNTY:		SHEET NO: 166	E

7

FILE NAME : C:\Users\PROJECTS\tr_stdplate\W61.DGN PLOT DATE : 22-MAR-2011 13:21 PLOT BY : mscj9h PLOT NAME : PLOT SCALE : 6.952219:1.000000
WISDOT/CADDS SHEET 42

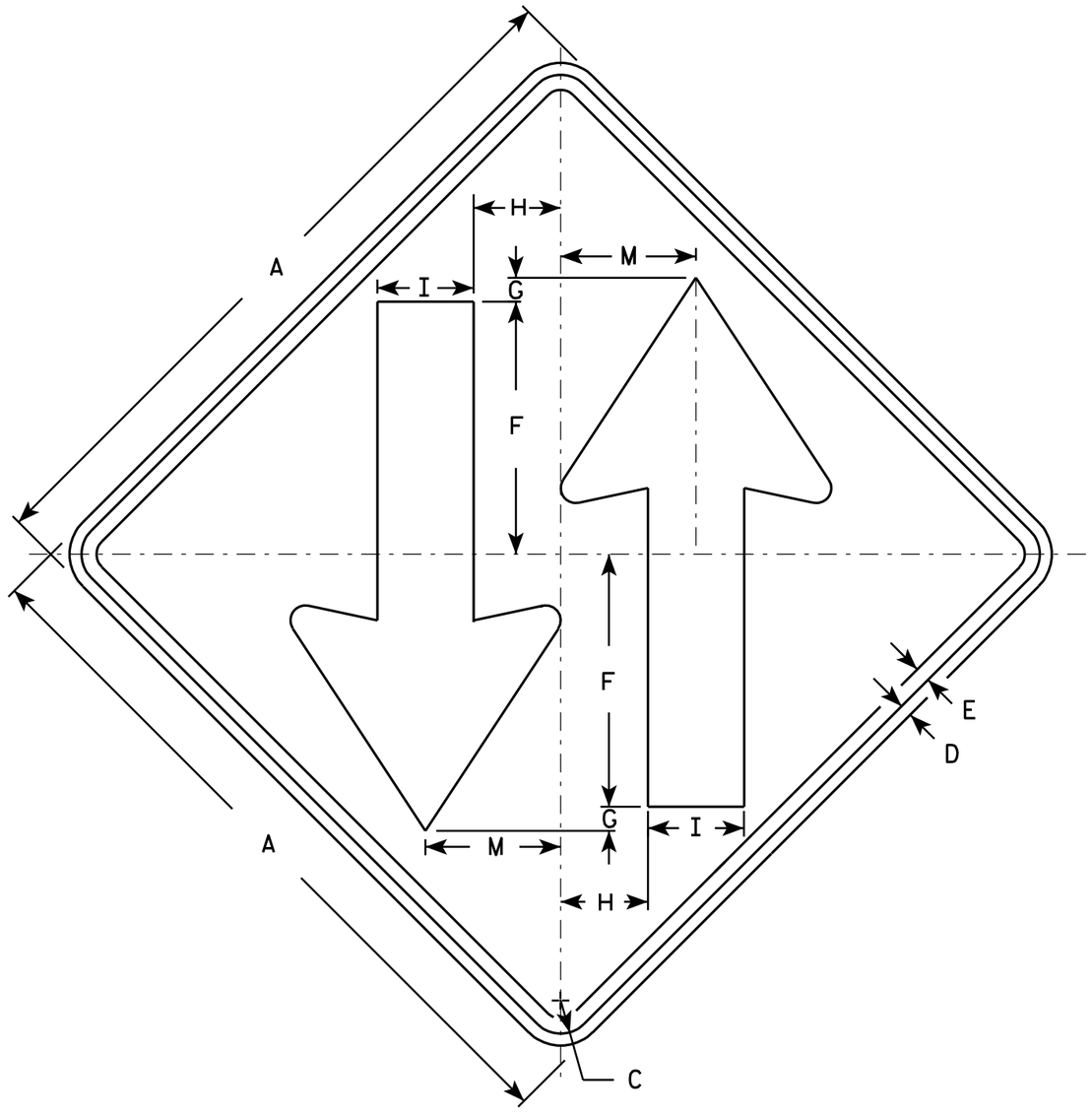

W6-3

NOTES

1. Sign is Type II - Type H Reflective - reference WIS DOT Standard Specification for HIGHWAY and STRUCTURE CONSTRUCTION latest edition.
2. Color:
   Background - Yellow
   Message - Black
3. Corners may be square or rounded when base material is plywood but borders shall be rounded as shown. When base material is metal, the corners and borders shall be rounded.

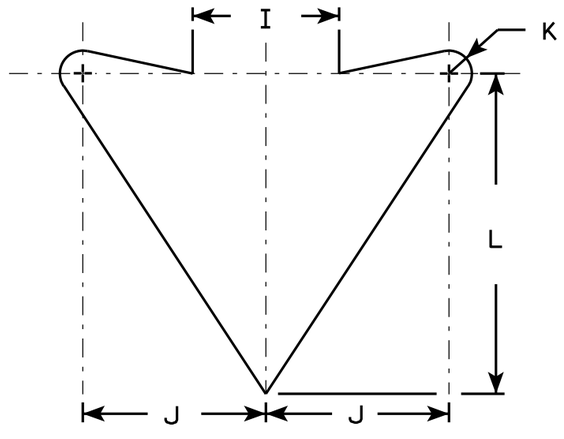

ARROW DETAIL

SIZE	A	B	C	D	E	F	G	H	I	J	K	L	M	N	O	P	Q	R	S	T	U	V	W	X	Y	Z	Area sq. ft.
1	30		1 3/8	1/2	5/8	10 1/2	1	3 5/8	4	5	5/8	8 3/4	5 5/8														6.25
2S	36		1 5/8	5/8	3/4	12	1	4 1/4	5	6	3/4	10 1/2	6 3/4														9.0
2M	36		1 5/8	5/8	3/4	12	1	4 1/4	5	6	3/4	10 1/2	6 3/4														9.0
3																											
4	48		2 1/4	3/4	1	15 1/2	1	6	6	8	1	14	9														16.0
5	48		2 1/4	3/4	1	15 1/2	1	6	6	8	1	14	9														16.0

STANDARD SIGN
W6-3

WISCONSIN DEPT OF TRANSPORTATION

APPROVED Matthew R Rauch
for State Traffic Engineer

DATE 3/22/11 PLATE NO. W6-3.9

PROJECT NO:	HWY:	COUNTY:		SHEET NO: 167	E

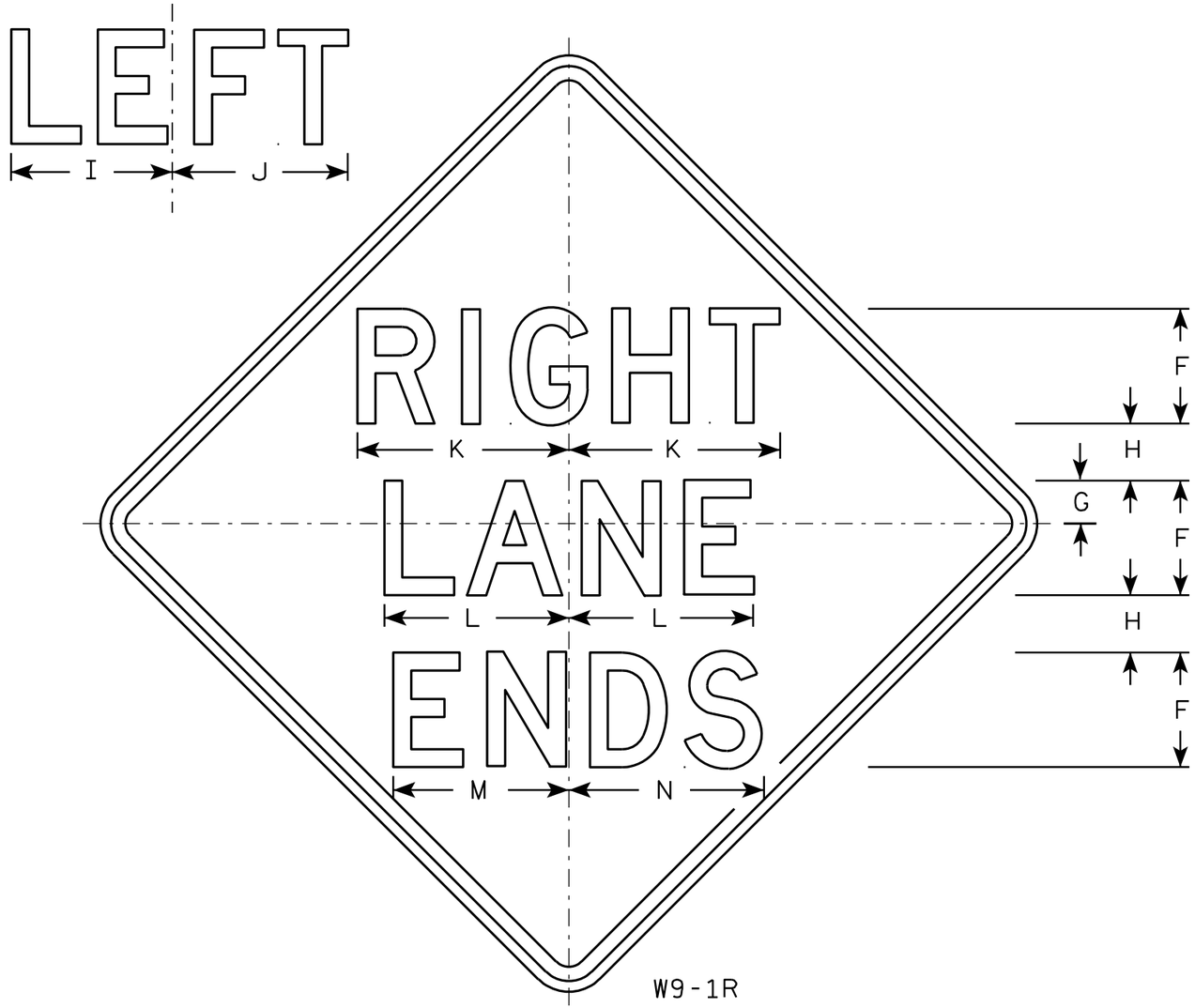

W9-1R

NOTES

1. Sign is Type II - Type H Reflective - reference WIS DOT Standard Specification for HIGHWAY and STRUCTURE CONSTRUCTION latest edition.
2. Color:
   Background - Yellow
   Message - Black
3. Message Series - D
4. Corners may be square or rounded when base material is plywood but borders shall be rounded as shown. When base material is metal, the corners and borders shall be rounded.
5. W9-1L same as W9-1R except the word Left replaces Right.

SIZE	A	B	C	D	E	F	G	H	I	J	K	L	M	N	O	P	Q	R	S	T	U	V	W	X	Y	Z	Area sq. ft.
1	30		1 3/8	1/2	5/8	5	1 1/2	2 1/2	7 1/8	7 5/8	9 1/4	8 1/8	7 5/8	8 5/8													6.25
2S	36		1 5/8	5/8	3/4	6	2	3	8 1/2	9 1/8	11	9 3/4	9	10 3/8													9.0
2M	36		1 5/8	5/8	3/4	6	2	3	8 1/2	9 1/8	11	9 3/4	9	10 3/8													9.0
3	36		1 5/8	5/8	3/4	6	2	3	8 1/2	9 1/8	11	9 3/4	9	10 3/8													9.0
4	36		1 5/8	5/8	3/4	6	2	3	8 1/2	9 1/8	11	9 3/4	9	10 3/8													9.0
5	48		2 1/4	3/4	1	8	3	4	11 1/4	12 1/4	14 3/4	12 7/8	12 1/4	13 5/8													16.0

STANDARD SIGN
W9-1

WISCONSIN DEPT OF TRANSPORTATION

APPROVED Matthew R Rauch for State Traffic Engineer

DATE 12/20/10 PLATE NO. W9-1.7

PROJECT NO:

SHEET NO: 168 E

FILE NAME : C:\Users\PROJECTS\tr_stdplate\W91.DGN PLOT DATE : 20-DEC-2010 08:54 PLOT BY : dotsja

WISDOT/CADDS SHEET 42

7

7

BRIDGE OFFICE CONTACT:
WILLIAM DREHER
608-266-8489

CONSULTANT CONTACT
SCOTT GINAL
920-208-0296

STATE PROJECT NUMBER
1643-05-75

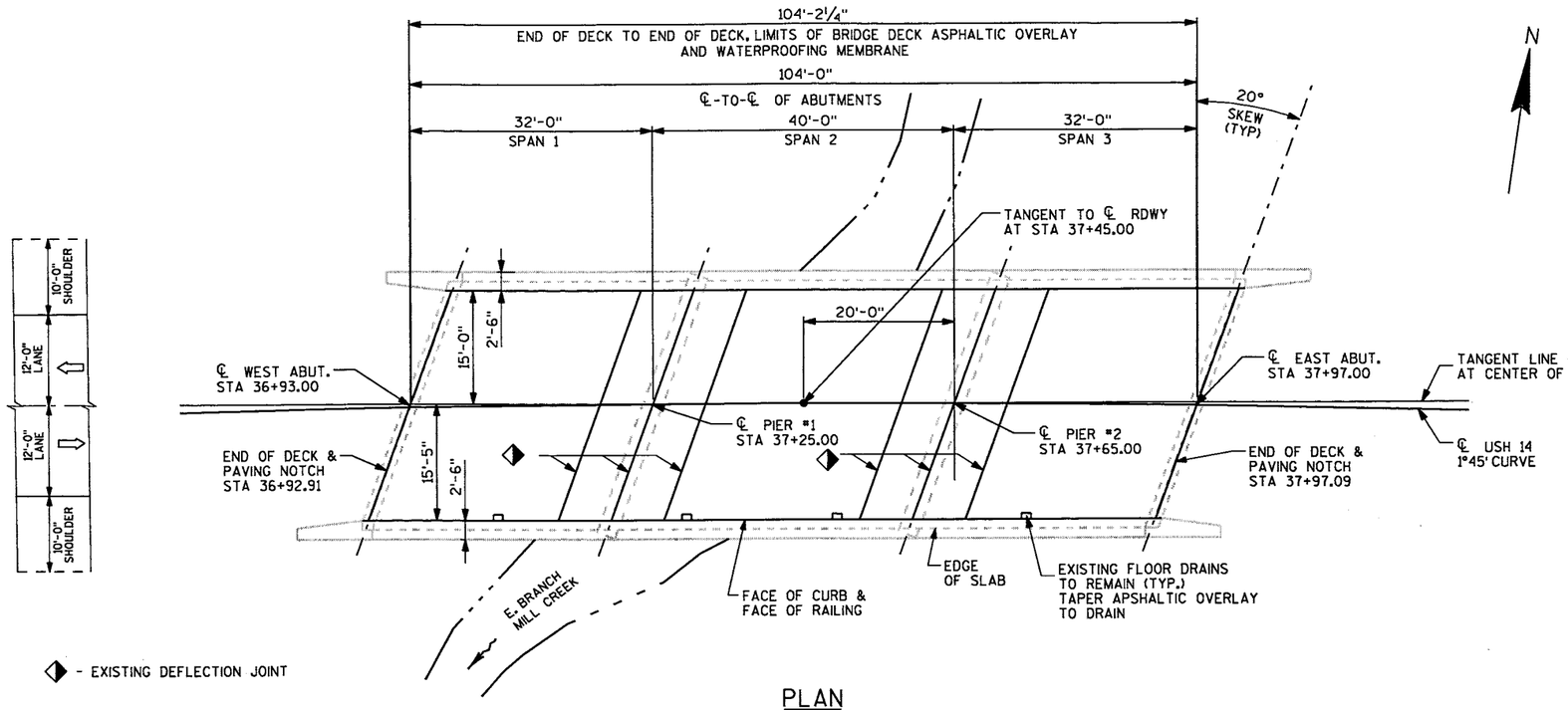

PLAN
(THREE SPAN CONCRETE HAUNCHED SLAB BRIDGE)

DESIGN DATA

LIVE LOAD:
- DESIGN RATING: HS20-S16
- INVENTORY RATING FACTOR: HS 16
- OPERATING RATING FACTOR: HS 27
- MAXIMUM STANDARD PERMIT VEHICLE LOAD = 150 KIPS

TRAFFIC VOLUME
- A.A.D.T. = 4344 (2011)
- A.A.D.T. = 6026 (2031)
- DESIGN SPEED = 55 MPH

LIST OF DRAWINGS

1. GENERAL PLAN
2. GENERAL NOTES & QUANTITIES

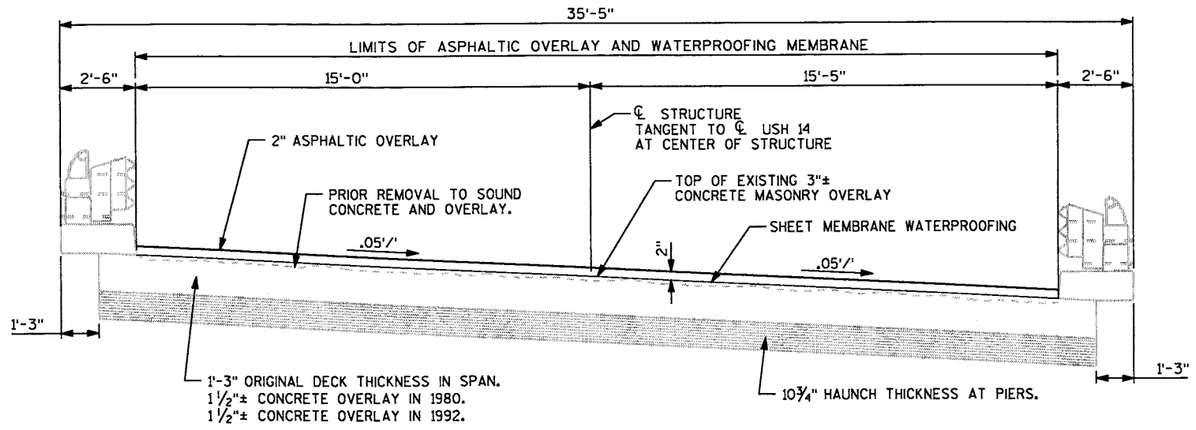

CROSS SECTION THRU BRIDGE
(LOOKING EAST)

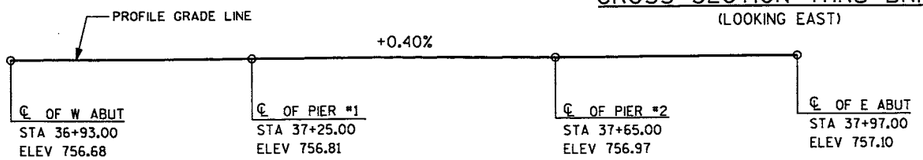

PROFILE GRADE LINE
(USH 14)

BENCH MARKS

NO.	STATION	DESCRIPTION	OFFSET	ELEV.
BM 1	36+83	USGS DISC IN BRIDGE DECK CURB	16'RT	755.87

NO.	DATE	REVISION	BY

DONOHUE & ASSOCIATES

STATE OF WISCONSIN
DEPARTMENT OF TRANSPORTATION

ACCEPTED William C. Dreher KAR 10/01/12
CHIEF STRUCTURES DESIGN ENGINEER DATE

STRUCTURE B-52-032

USH 14 OVER E. BRANCH MILL CREEK

COUNTY	TOWN/~~CITY/VILLAGE~~
RICHLAND	DAYTON

DESIGN SPEC.
REHABILITATION N/A

DESIGNED BY	DESIGN CK'D.	DRAWN BY	PLANS CK'D.
SJG	PJE	JCP	SJG

GENERAL PLAN

SHEET 1 OF 2
169

8

8

STATE PROJECT NUMBER
1643-05-75

TOTAL ESTIMATED QUANTITIES

BID ITEMS	BID ITEMS	UNIT	TOTALS
455.0105	ASPHALTIC MATERIAL PG58-28	TON	2
460.1103	HMA PAVEMENT TYPE E-3	TON	40
509.0301	PREPARATION DECKS TYPE 1	SY	7
509.0302	PREPARATION DECKS TYPE 2	SY	3
509.0500	CLEANING DECKS	SY	352
509.2500	CONCRETE MASONRY OVERLAY DECKS	CY	0.6
516.0600.S	SHEET MEMBRANE WATERPROOFING	SY	352
	NON-BID ITEMS		
	NAME PLATE		

GENERAL NOTES

DRAWINGS, ELEVATIONS, AND DIMENSIONS SHOWN ARE BASED ON THE ORIGINAL STRUCTURE PLANS. DIMENSIONS AND ELEVATIONS SHALL BE VERIFIED BY THE CONTRACTOR IN THE FIELD.

DRAWINGS SHALL NOT BE SCALED.

QUANTITIES FOR BID ITEMS "PREPARATION DECKS TYPE 1" AND "PREPARATION DECKS TYPE 2" SHALL BE VERIFIED IN THE FIELD BY THE PROJECT ENGINEER.

EXISTING FLOOR DRAINS TO REMAIN IN PLACE. SLOPE ASPHALT OVERLAY TO DRAIN.

VARIATIONS TO THE NEW GRADE LINE OVER 1/4" MUST BE SUBMITTED BY THE FIELD ENGINEER TO THE STRUCTURES DESIGN SECTION FOR REVIEW.

THE CONTRACTOR SHALL SUPPLY A NEW NAME PLATE IN ACCORDANCE WITH SECTION 502.3.11 OF THE STANDARD SPECIFICATIONS AND THE STANDARD DETAIL DRAWINGS. NAME PLATE TO SHOW ORIGINAL CONSTRUCTION YEAR.

LIMITS OF ASPHALT OVERLAY AND "SHEET MEMBRANE WATERPROOFING" SHALL BE FACE-TO-FACE OF CURB AND END-TO-END OF DECK.

8

8

NO.	DATE	REVISION	BY

STATE OF WISCONSIN
DEPARTMENT OF TRANSPORTATION
STRUCTURES DESIGN SECTION

STRUCTURE B-52-032

DRAWN BY JCP | PLANS CK'D. SJG

GENERAL NOTES & QUANTITIES

SHEET 2 OF 2

170

FILE NAME : L:\Projects\11099\Dwg\B-52-0032\08_02-general notes.DGN PLOT DATE : 07/12/12 PLOT TIME : 11:18:38 AM PLOT BY : sginal

STATE PROJECT NUMBER

1643-05-75

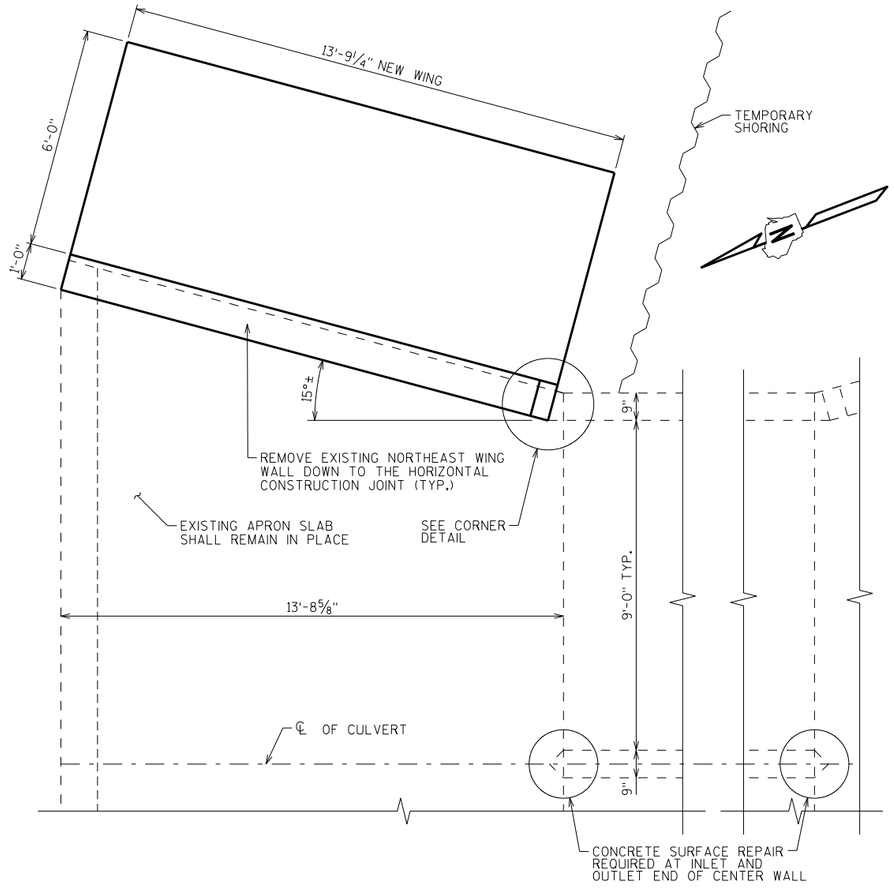

PLAN OF WING REPLACEMENT

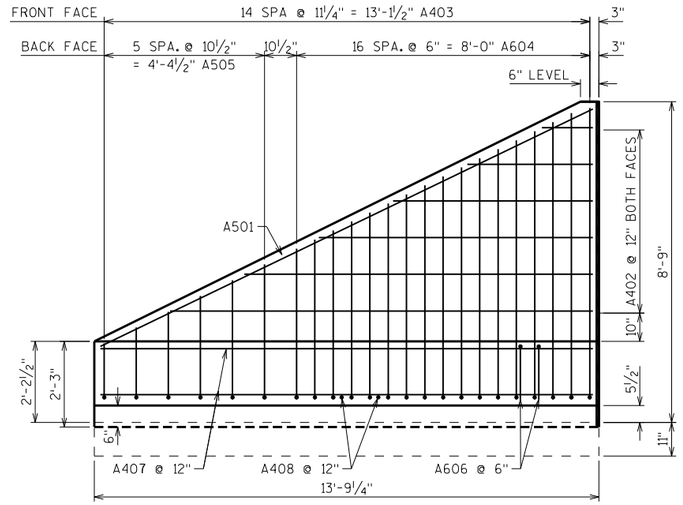

WING ELEVATION

LOOKING EAST AT F.F. OF WING

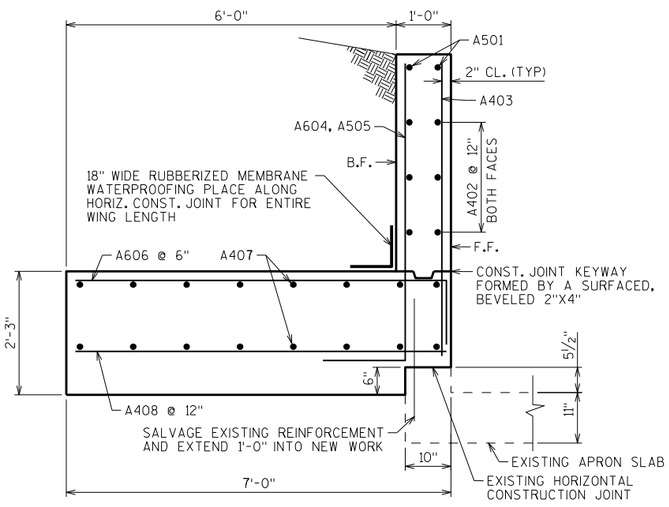

SECTION THRU WING

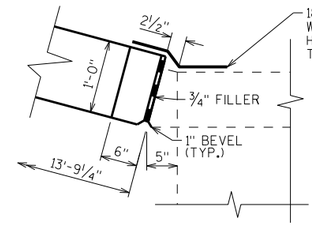

CORNER DETAIL

NOTE: THE FIRST OR FIRST TWO DIGITS OF THE MARK SIGNIFIES THE BAR SIZE.

THE DIMENSION IN THE BENT COLUMN IS THE OUT TO OUT HORIZONTAL LEG OF A "L" SHAPED BAR.

BILL OF BARS

MARK	COAT	NO. REQ'D.	LENGTH	BENT	BAR SERIES	LOCATION
A501	X	2	14-9	NO		WING HORIZ. BOTH FACES
A402	X	12	6-6	NO	◭	WING HORIZ. BOTH FACES
A403	X	15	4-9	NO	◭	WING VERT. FRONT FACE
A604	X	17	6-10	1-0	◭	WING VERT. BACK FACE
A505	X	6	3-4	0-10	◭	WING VERT. BACK FACE
A606	X	28	7-6	1-0		WING FOOTING
A407	X	16	13-4	NO		WING FOOTING
A408	X	14	6-8	NO		WING FOOTING

◭ LENGTH SHOWN FOR BAR IS AN AVERAGE LENGTH AND SHOULD ONLY BE USED FOR BAR WEIGHT CALCULATIONS. SEE BAR SERIES TABLE FOR ACTUAL LENGTHS.

BAR SERIES TABLE

BAR MARK	NO. REQ'D.	LENGTHS FOR EACH SERIES
A402	2 SERIES OF 6	1 - 5 TO 11 - 7
A403	1 SERIES OF 15	1 - 7 TO 7 - 11
A604	1 SERIES OF 17	4 - 11 TO 8 - 9
A505	1 SERIES OF 6	2 - 3 TO 4 - 4

BUNDLE AND TAG EACH SERIES SEPARATELY

DESIGN DATA

ULTIMATE DESIGN STRESSES:

CONCRETE MASONRY, GRADE A-FA ——— f'_c = 3500 P.S.I.

HIGH STRENGTH BAR STEEL REINFORCEMENT — f_y = 60000 P.S.I.

TOTAL ESTIMATED QUANTITIES

BID ITEMS

203.0200	REMOVING OLD STRUCTURE STA.302+50.00 NORTHEAST WING	1	LS
206.2000	EXCAVATION FOR STRUCTURES CULVERTS C-52-24 NORTHEAST WING	1	LS
206.6000.S	TEMPORARY SHORING	160	SF
210.0100	BACKFILL STRUCTURE	32	CY
504.0100	CONCRETE MASONRY CULVERTS	10	CY
505.0610	BAR STEEL REINFORCEMENT HS COATED CULVERTS	850	LB
509.1500	CONCRETE SURFACE REPAIR	5	SF
516.0500	RUBBERIZED MEMBRANE WATERPROOFING	4	SY

NON-BID ITEMS

FILLER	3/4"	SIZE

GENERAL NOTES

DRAWINGS SHALL NOT BE SCALED.

BAR STEEL REINFORCEMENT SHALL BE EMBEDDED 2" CLEAR UNLESS SHOWN OR NOTED OTHERWISE.

THE UPPER LIMITS OF EXCAVATION FOR STRUCTURES SHALL BE THE EXISTING GROUNDLINE.

ALL SPACES EXCAVATED AND NOT OCCUPIED BY THE NEW STRUCTURE SHALL BE BACKFILLED WITH STRUCTURE BACKFILL TO THE TOP OF THE WING WITHIN THE LENGTH OF THE WING WALL.

STRUCTURE DESIGN CONTACT:

DANIELLE DE TENNIS (608) 266-8689

LAURA SHADEWALD (608) 267-9592

NO.	DATE	REVISION	BY

Plans Prepared By WISDOT

BUREAU OF STRUCTURES

ACCEPTED William C. Dreher LLS 4/18/12

CHIEF STRUCTURES DESIGN ENGINEER — DATE

STRUCTURE C-52-24

USH 14 OVER BRANCH OF BRUSH CREEK

COUNTY	TOWN ~~CITY/VILLAGE~~
RICHLAND	RICHLAND

DESIGN SPEC. AASHTO LRFD DESIGN SPEC. 5th EDITION

DESIGNED BY	DESIGN CK'D.	DRAWN BY	PLANS CK'D.
DFD	NAR	DFD	NAR

GENERAL PLAN

SHEET 1 OF 1

171

I.D. 1643-05-05

DATE: JAN. 2011

SCALE = 2

8

8

STATE PROJECT NUMBER
1643-05-75

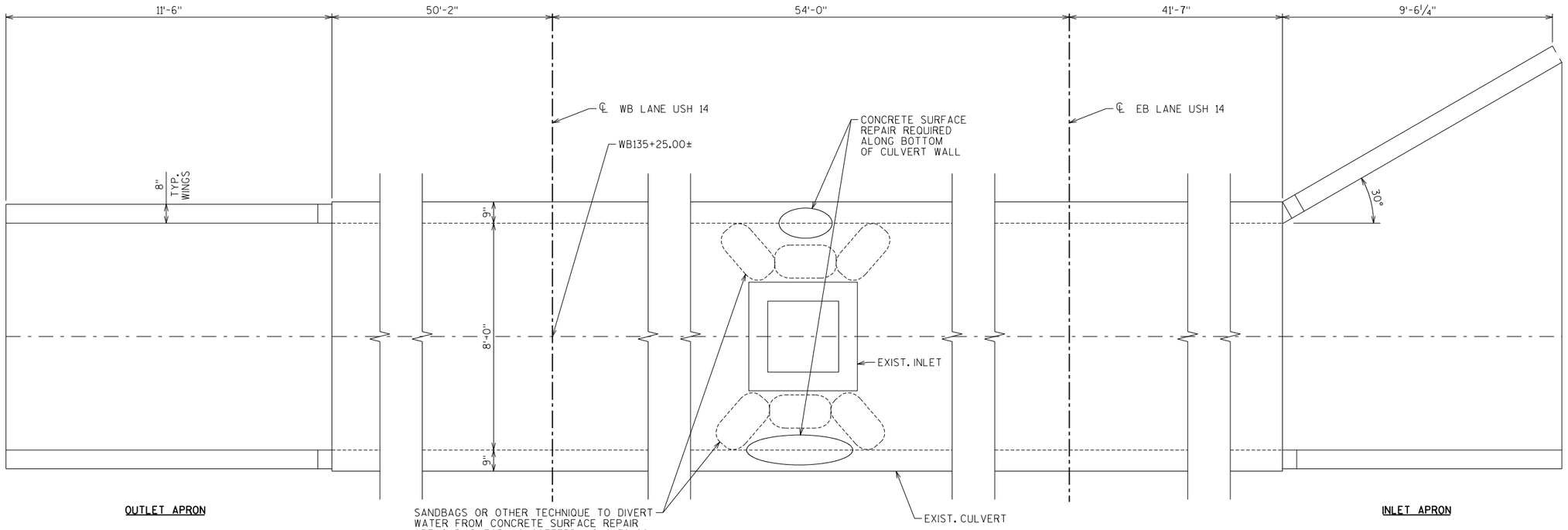

EXISTING CULVERT PLAN

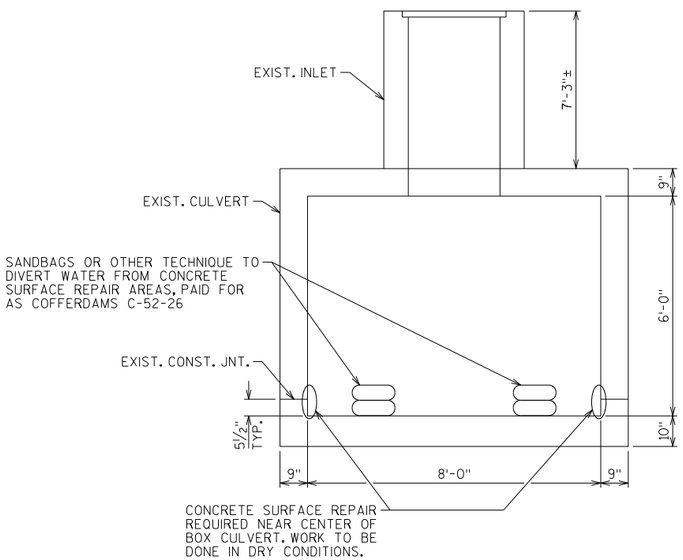

SECTION THROUGH EXIST. CULVERT

SHOWING REQURED CONCRETE SURFACE REPAIR AREAS

TOTAL ESTIMATED QUANTITIES

BID ITEMS

206.5000	COFFERDAMS C-52-26	1	LS
509.1500	CONCRETE SURFACE REPAIR	15	SF

GENERAL NOTES

DIMENSIONS SHOWN ARE BASED ON THE EXISTING ORIGINAL STRUCTURE PLANS

STRUCTURE DESIGN CONTACT:

DANIELLE DE TENNIS (608) 266-8689

LAURA SHADEWALD (608) 267-9592

NO.	DATE	REVISION	BY

Plans Prepared By **WISDOT**

BUREAU OF STRUCTURES

ACCEPTED William C. Dreher LLS 4/18/12

CHIEF STRUCTURES DESIGN ENGINEER — DATE

STRUCTURE C-52-26

USH 14 OVER UNNAMED CREEK

COUNTY	TOWN ~~CITY/VILLAGE~~
RICHLAND	DAYTON

DESIGN SPEC. AASHTO LRFD DESIGN SPEC. 5th EDITION

DESIGNED BY	DESIGN CK'D.	DRAWN BY	PLANS CK'D.
DFD	NAR	DFD	NAR

GENERAL PLAN

SHEET 1 OF 1

172

I.D. 1643-05-05

DATE: JAN. 2012

SCALE = 2

8

8

STATE PROJECT NUMBER

1643-05-75

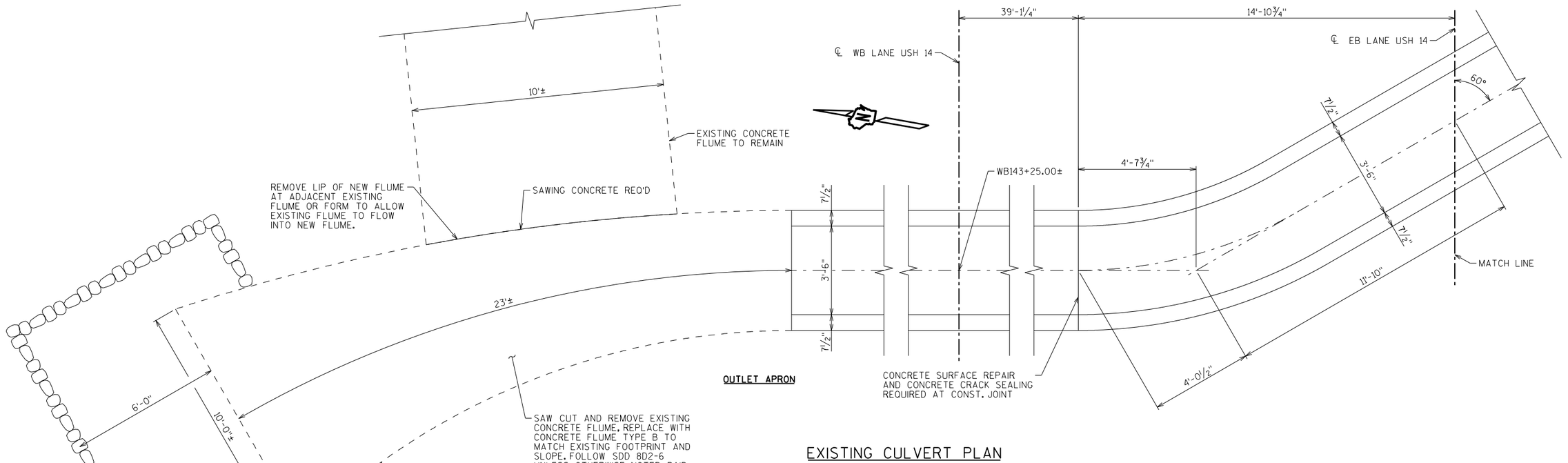

EXISTING CULVERT PLAN

OUTLET END

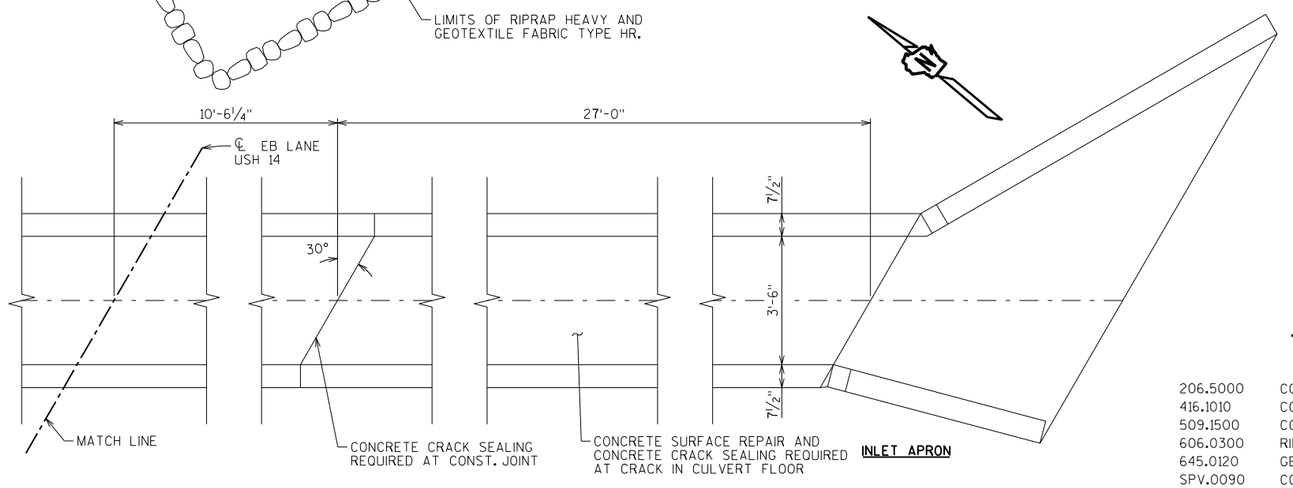

EXISTING CULVERT PLAN

INLET END

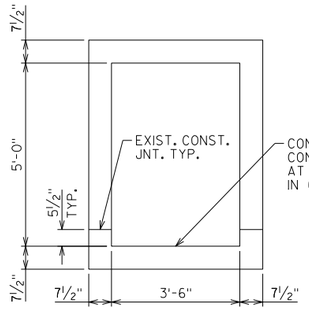

TYPICAL SECTION THRU EXISTING CULVERT

TOTAL ESTIMATED QUANTITIES

BID ITEMS

206.5000	COFFERDAMS C-52-27	1	LS
416.1010	CONCRETE SURFACE DRAINS	4	CY
509.1500	CONCRETE SURFACE REPAIR	4	SF
606.0300	RIPRAP HEAVY	11	CY
645.0120	GEOTEXTILE FABRIC TYPE HR	28	SY
SPV.0090	CONCRETE CRACK SEALING	9	LF

NON-BID ITEMS

FILLER	3/4"	SIZE

GENERAL NOTES

DIMENSIONS SHOWN ARE BASED ON THE EXISTING ORIGINAL STRUCTURE PLANS

CONCRETE CRACK SEALING CAN BE ACCOMPLISHED IN STAGES

STRUCTURE DESIGN CONTACT:

DANIELLE DE TENNIS (608) 266-8689

LAURA SHADEWALD (608) 267-9592

NO.	DATE	REVISION	BY

Plans Prepared By WISDOT

BUREAU OF STRUCTURES

ACCEPTED William C. Ducker KAR 10/26/12

CHIEF STRUCTURES DESIGN ENGINEER DATE

STRUCTURE C-52-27

USH 14 OVER UNNAMED CREEK

COUNTY: RICHLAND | TOWN/~~CITY/VILLAGE~~: DAYTON

DESIGN SPEC.: AASHTO LRFD DESIGN SPEC. 5th EDITION

DESIGNED BY DFD | DESIGN CK'D. NAR | DRAWN BY DFD | PLANS CK'D. NAR

GENERAL PLAN

SHEET 1 OF 1

173

I.D. 1643-05-05A

DATE: JAN. 2012

SCALE = 2

8

8

BRIDGE OFFICE CONTACT:
WILLIAM DREHER
608-266-8489

CONSULTANT CONTACT
SCOTT GINAL
920-208-0296

STATE PROJECT NUMBER
1643-05-75

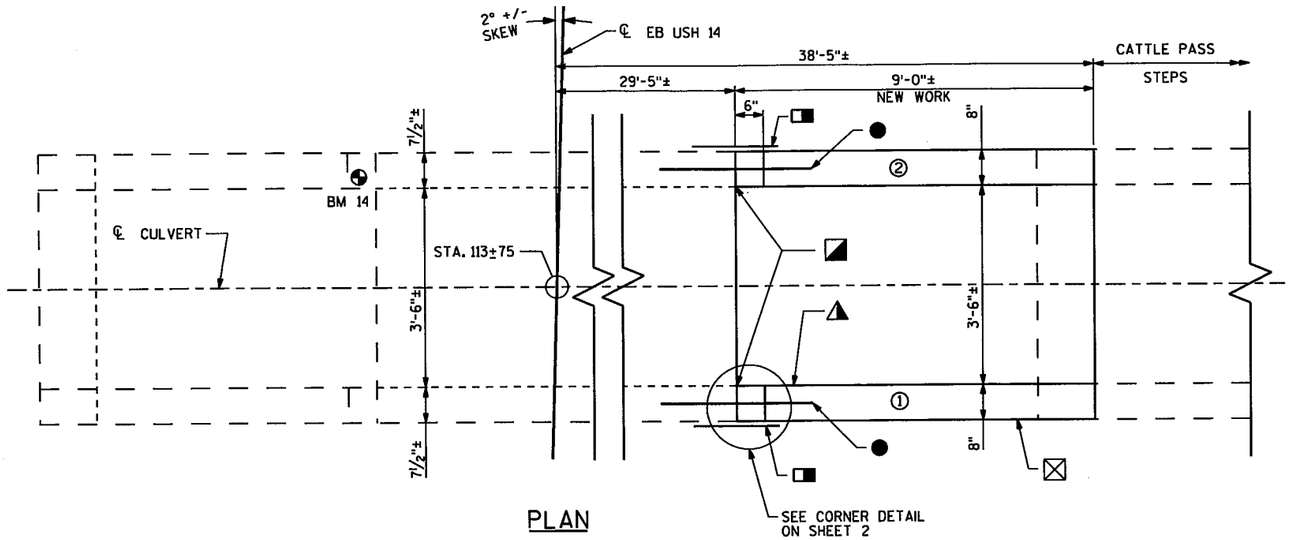

PLAN

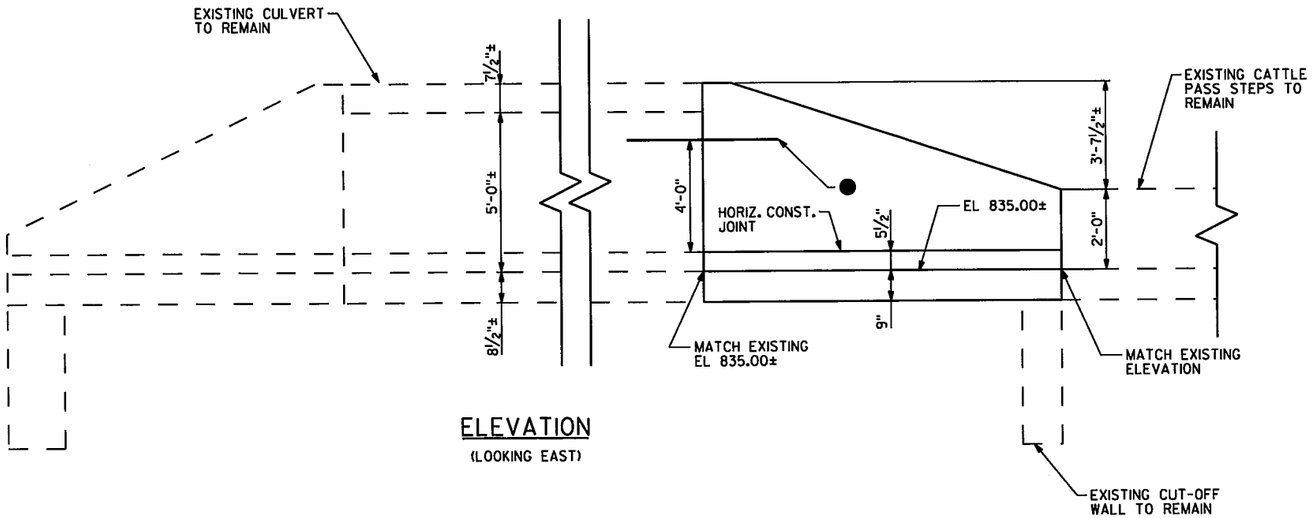

ELEVATION
(LOOKING EAST)

GENERAL NOTES

DRAWINGS, DIMENSIONS, AND ELEVATIONS SHOWN ARE BASED ON AS-BUILT PLANS AND CURRENT BRIDGE INVENTORY INFORMATION. DIMENSIONS AND ELEVATIONS SHALL BE VERIFIED IN THE FIELD.

DRAWINGS SHALL NOT BE SCALED.

BAR STEEL REINFORCEMENT SHALL BE EMBEDDED 2" CLEAR UNLESS OTHERWISE SHOWN OR NOTED.

THE EXISTING GROUNDLINE SHALL BE THE UPPER LIMITS OF EXCAVATION FOR STRUCTURES.

ALL SPACES EXCAVATED AND NOT OCCUPIED BY THE NEW STRUCTURE SHALL BE BACKFILLED WITH STRUCTURE BACKFILL.

SALVAGE AND RE-INSTALL EXISTING NAME PLATE LABELED C-52-28-61. INCIDENTAL TO CONCRETE MASONRY CULVERTS.

DESIGN DATA

ULTIMATE DESIGN STRESSES:
CONCRETE MASONRY ——— f'c = 3,500 psi
HIGH STRENGTH BAR STEEL REINFORCEMENT ——— fy = 60,000 psi

TRAFFIC VOLUME

ADT= 4334 (2011)
ADT= 6026 (2031)
RDS= 55 M.P.H.

LIST OF DRAWINGS

1. GENERAL PLAN
2. DETAILS & BILL OF BARS

LEGEND

- INSIDE WALLS TO MATCH EXISTING (TYP.)
- REMOVE EXISTING WINGS & APRON.
- INDICATES WING NUMBER
- 18" RUBBERIZED MEMBRANE WATERPROOFING. SEAL ALL HORIZONTAL AND VERTICAL JOINTS ON BACKFACE.
- BM# INDICATES BENCH MARK NUMBER
- NAME PLATE LOCATION SEE SHEET 2.
- 1" DIA. PLAIN (SMOOTH) ROUND DOWEL BAR, 2'-6" LONG, BETWEEN BARREL AND WINGS. DRILL AND EPOXY INTO BARREL WALL WITH 1'-3" EMBEDMENT. USE DEBONDER ON EXTENSION INTO WING WALL. ASTM A36 MATERIAL MAY BE SUBSTITUTED FOR AASHTO M31. DOWEL BAR, EPOXY, AND DEBONDER ARE INCIDENTAL TO BID ITEM "CONCRETE MASONRY CULVERTS".

TOTAL ESTIMATED QUANTITIES

BID ITEMS	BID ITEMS	UNIT	TOTALS
203.0200	REMOVING OLD STRUCTURE (STA 113+75)	LS	1
206.2000	EXCAVATION FOR STRUCTURES CULVERTS (C-52-28)	LS	1
502.5002	MASONRY ANCHORS TYPE L NO. 4 BARS	EACH	10
504.0100	CONCRETE MASONRY CULVERTS	CY	3
505.0410	BAR STEEL REINFORCEMENT HS CULVERTS	LB	410
516.0500	RUBBERIZED MEMBRANE WATERPROOFING	SY	5
	NON-BID ITEMS		
	PREFORMED JOINT FILLER	SIZE	¾"

BENCH MARKS

NO.	STATION	DESCRIPTION	ELEV.
14	113+79, LT	CHISELED □ ON NE WINGWALL	840.47

WISCONSIN
SCOTT J. GINAL
E-38680
PORT WASHINGTON, WI
PROFESSIONAL ENGINEER
6/15/2012

NO.	DATE	REVISION	BY

DONOHUE & ASSOCIATES

STATE OF WISCONSIN
DEPARTMENT OF TRANSPORTATION

ACCEPTED William C. Drehen KAR 10/01/12
CHIEF STRUCTURES DESIGN ENGINEER — DATE

STRUCTURE C-52-028

USH 14 OVER TRIBUTARY TO MILL CREEK

COUNTY: RICHLAND — TOWN/~~CITY/VILLAGE~~: DAYTON

DESIGN SPEC. REHABILITATION N/A

DESIGNED BY	DESIGN CK'D.	DRAWN BY	PLANS CK'D.
SJG	PJE	JRJ	SJG

GENERAL PLAN

SHEET 174 OF 2

8

8

STATE PROJECT NUMBER
1643-05-75

BILL OF BARS

BAR MARK	COAT	NUMBER REQUIRED	LENGTH	BAR SERIES	BENT	LOCATION
A401		14	1' - 10"			WING VERTICAL FRONT FACE
A502		20	7' - 4"	(X)	X	WING VERTICAL BACK FACE
A403		14	3' - 2"	(X)		WING VERTICAL FRONT FACE
A404		13	8' - 8"			WING HORIZONTAL & APRON LONGITUDINAL
A405		16	4' - 10"	(X)		WING HORIZONTAL
A506		4	9' - 1"			WING HORIZONTAL TOP
A407		10	4' - 2"			APRON TRANSVERSE TOP
A408		5	3' - 0"			APRON LONGITUDINAL DOWEL
A409		5	3' - 6"		X	CUTOFF WALL DOWEL

BENDING DIMENSIONS ARE OUT TO OUT OF BARS.

THE FIRST OR FIRST TWO DIGITS OF THE BAR MARK SIGNIFIES THE BAR SIZE

(X) LENGTH SHOWN FOR BAR IS AN AVERAGE LENGTH AND SHOULD ONLY BE USED FOR BAR WEIGHT CALCULATIONS. SEE BAR SERIES TABLE FOR ACTUAL LENGTHS.

BAR SERIES TABLE

BAR MARK	NO. REQ'D.	LENGTH
A502	2 SERIES OF 10	5' - 6" TO 9' - 1"
A403	2 SERIES OF 7	1' - 4" TO 5' - 0"
A405	4 SERIES OF 4	1' - 0" TO 8' - 8"

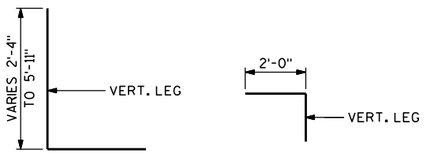

A502 A409

LEGEND

- 18" RUBBERIZED MEMBRANE WATERPROOFING. SEAL ALL HORIZONTAL AND VERTICAL JOINTS ON BACKFACE.
- 1" DIA. PLAIN (SMOOTH) ROUND DOWEL BAR, 2'-6" LONG, BETWEEN BARREL AND WINGS. DRILL AND EPOXY INTO BARREL WALL WITH 1'-3" EMBEDMENT. USE DEBONDER ON EXTENSION INTO WING WALL. ASTM A36 MATERIAL MAY BE SUBSTITUTED FOR AASHTO M31. DOWEL BAR, EPOXY, AND DEBONDER ARE INCIDENTAL TO BID ITEM "CONCRETE MASONRY CULVERTS".
- ⚠ MASONRY ANCHOR TYPE L (EPOXY ANCHORED) NO. 4 BARS. EMBED 1'-0" INTO SOUND CONCRETE AND SPACE AT 1'-0" CENTERS (MAX.) IN BASE SLAB.

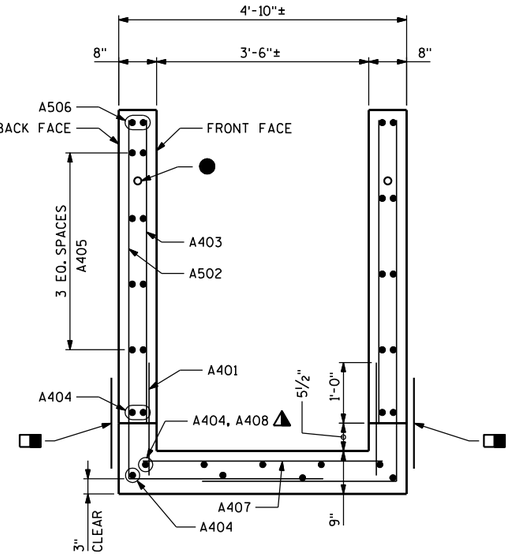

SECTION THRU WINGWALLS

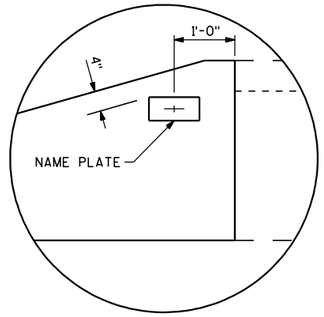

NAME PLATE LOCATION
(WING 1 ONLY)

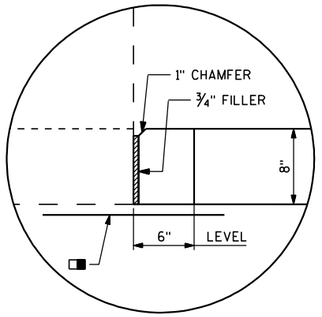

CORNER DETAIL

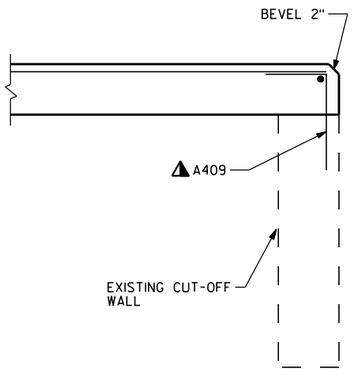

OUTLET APRON CUTOFF WALL

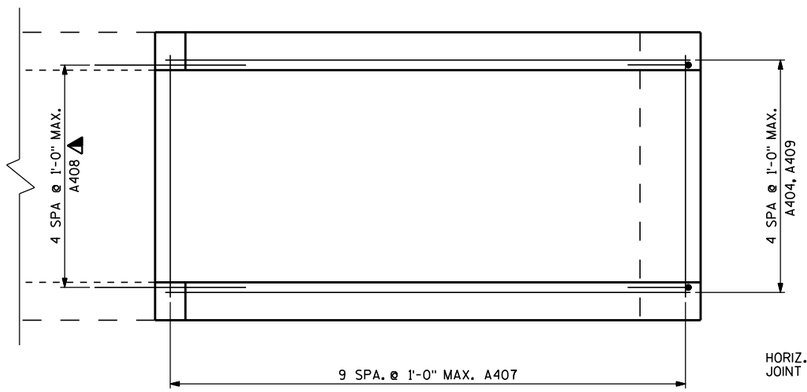

APRON DETAIL

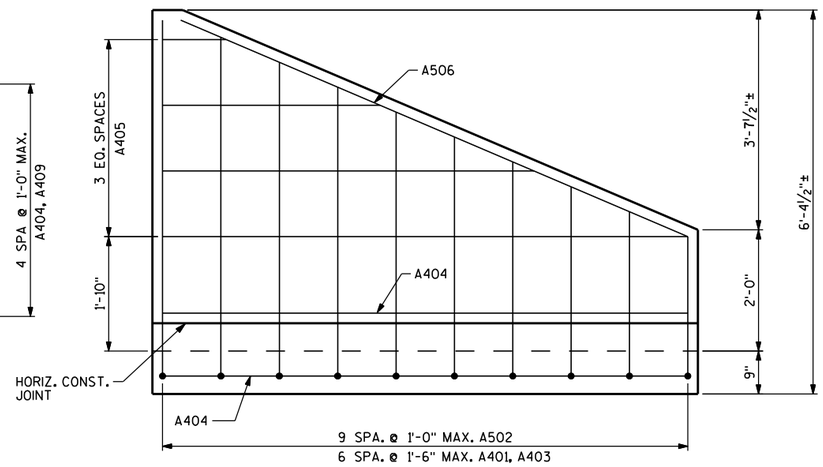

ELEVATION - WING 1
(WING 2 SIMILAR)

NO.	DATE	REVISION	BY

STATE OF WISCONSIN
DEPARTMENT OF TRANSPORTATION
STRUCTURES DESIGN SECTION

STRUCTURE C-52-028

DRAWN BY JRJ | PLANS CK'D. SJG

DETAILS & BILL OF BARS

SHEET 2 OF 2

175

8

8

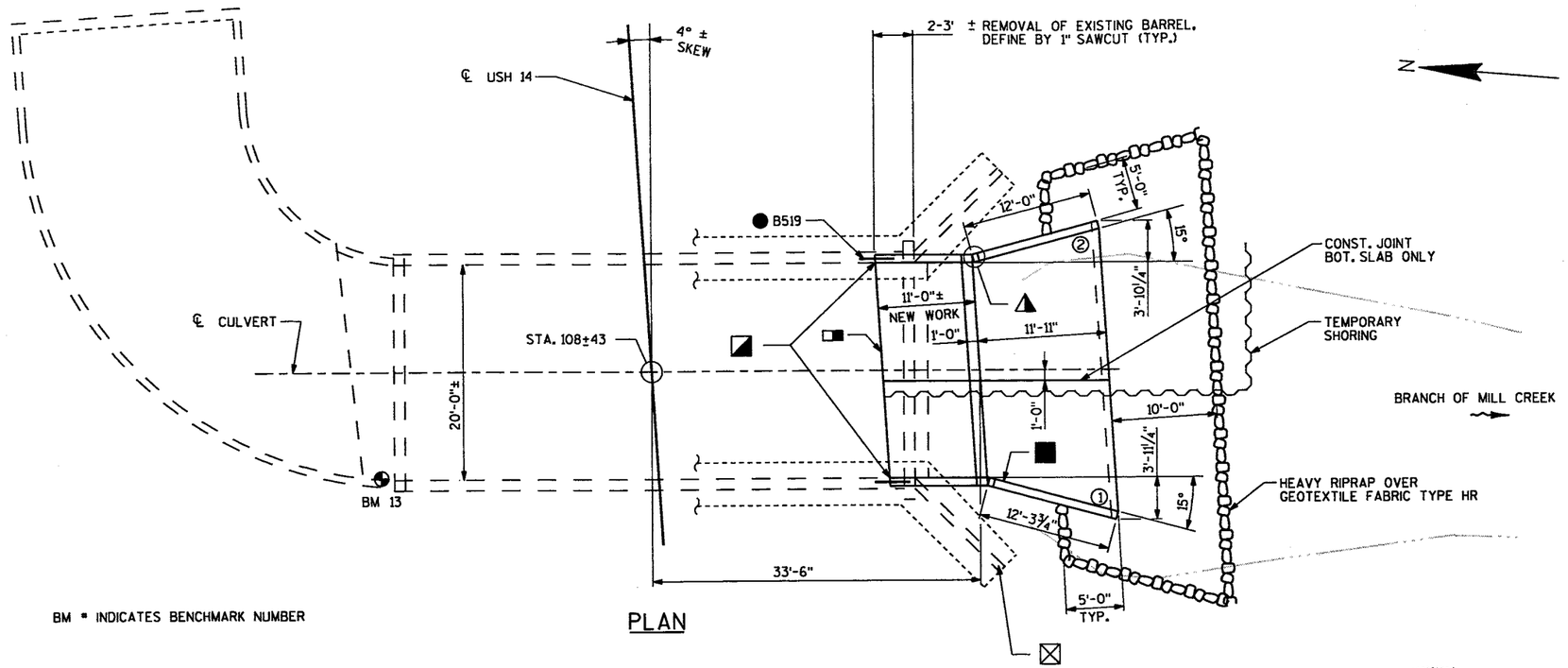

BM = INDICATES BENCHMARK NUMBER

PLAN

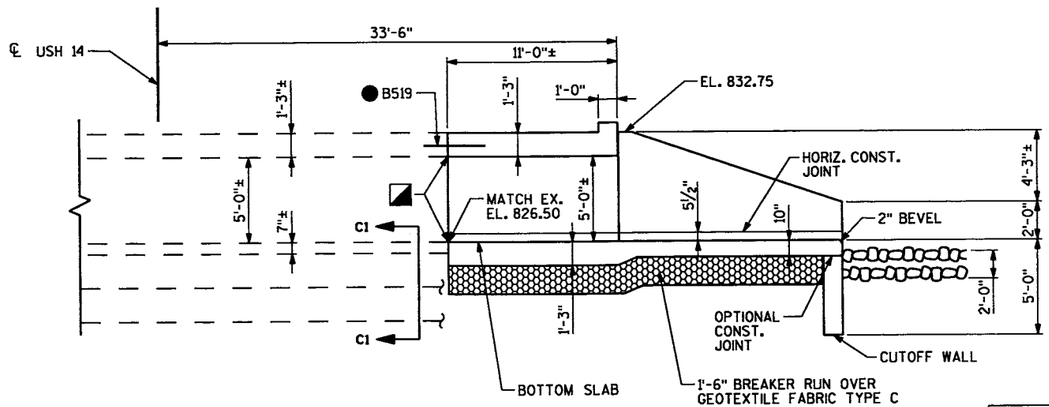

SECTION

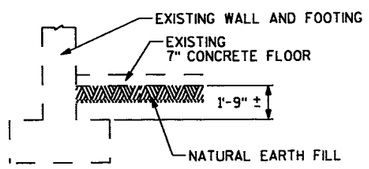

SECTION C1

BENCH MARKS

NO.	STATION	DESCRIPTION	ELEV.
13	108+36, LT	MARKER IN NW WINGWALL	834.78

BRIDGE OFFICE CONTACT:
WILLIAM DREHER
608-266-8489

CONSULTANT CONTACT
SCOTT GINAL
920-208-0296

STATE PROJECT NUMBER
1643-05-75

DESIGN DATA

LIVE LOAD:
DESIGN RATING ——— N/A

EARTHLOAD:
NEW WORK DESIGNED FOR 3.5 FT. OF FILL

ULTIMATE DESIGN STRESSES:
CONCRETE MASONRY ——— f'c = 3,500 psi
HIGH STRENGTH BAR STEEL REINFORCEMENT ——— fy = 60,000 psi

TRAFFIC VOLUME

ADT= 4334 (2011)
ADT= 6026 (2031)
RDS= 55 M.P.H.

LIST OF DRAWINGS

1. GENERAL PLAN
2. CULVERT DETAILS & GENERAL NOTES
3. APRON & WING DETAILS
4. DETAILS & BILL OF BARS

LEGEND

- SEE CORNER DETAILS ON SHEET 2.
- NAME PLATE LOCATION, SEE SHEET 4.
- BUILD APRON AND END OF BOX LEVEL
- INSIDE FACE TO MATCH EXISTING, TYP.
- REMOVE EXISTING BOX, HEADER, & WINGS TO SOUND CONCRETE.
- (#) INDICATES WING WALL NUMBER
- CONCRETE MASONRY ANCHOR, TYPE L NO. 5 BAR. EMBED 1'-3" INTO SOUND CONCRETE AND SPACE AT 1'-0" CENTERS. (TYP. IN ALL WALLS AND TOP SLAB)
- 18" MIN. WIDTH RUBBERIZED MEMBRANE WATERPROOFING UP WALLS AND ACROSS TOP SLAB.

WISCONSIN
SCOTT J. GINAL
E-38680
PORT WASHINGTON, WI
PROFESSIONAL ENGINEER

TOTAL ESTIMATED QUANTITIES

BID ITEMS	BID ITEMS	UNIT	TOTALS
203.0200	REMOVING OLD STRUCTURE (STA. 108+43)	LS	1
206.2000	EXCAVATION FOR STRUCTURES, CULVERTS (C-52-029)	LS	1
206.6000.S	TEMPORARY SHORING	SF	210
210.0100	BACKFILL STRUCTURE	CY	220
311.0115	BREAKER RUN	CY	45
502.5005	MASONRY ANCHOR TYPE L NO. 5 BARS	EA	34
504.0100	CONCRETE MASONRY CULVERTS	CY	42
505.0410	BAR STEEL REINFORCEMENT HS CULVERTS	LB	4020
505.0904	BAR COUPLERS NO. 4	EACH	17
505.0909	BAR COUPLERS NO. 9	EACH	15
506.0105	STRUCTURAL STEEL CARBON	LB	120
516.0500	RUBBERIZED MEMBRANE WATERPROOFING	SY	12
606.0300	RIPRAP HEAVY	CY	35
645.0105	GEOTEXTILE FABRIC TYPE C	SY	76
645.0120	GEOTEXTILE FABRIC TYPE HR	SY	53
	NON-BID ITEMS		
	PREFORMED JOINT FILLER	SIZE	¾"

NO.	DATE	REVISION	BY

DONOHUE & ASSOCIATES

STATE OF WISCONSIN
DEPARTMENT OF TRANSPORTATION

ACCEPTED William C. Drehe KAR 10/01/12
CHIEF STRUCTURES DESIGN ENGINEER — DATE

STRUCTURE C-52-029

USH 14 OVER BRANCH OF MILL CREEK

COUNTY	TOWN ~~CITY/VILLAGE~~
RICHLAND	DAYTON

DESIGN SPEC.
REHABILITATION N/A

DESIGNED BY	DESIGN CK'D.	DRAWN BY	PLANS CK'D.
JRJ	SJG	JRJ	SJG

GENERAL PLAN

SHEET 1 OF 4
176

8

8

STATE PROJECT NUMBER
1643-05-75

GENERAL NOTES

DRAWINGS, ELEVATIONS AND DIMENSIONS SHOWN ARE BASED ON AS BUILT PLANS, FIELD SURVEY AND THE STRUCTURE INVENTORY. DIMENSIONS AND ELEVATIONS SHALL BE VERIFIED IN THE FIELD.

DRAWINGS SHALL NOT BE SCALED.

BAR STEEL REINFORCEMENT SHALL BE EMBEDDED 2" CLEAR UNLESS OTHERWISE SHOWN OR NOTED.

THE FIRST DIGIT OF A THREE DIGIT BAR NO. AND THE FIRST TWO DIGITS OF A FOUR DIGIT BAR NO. SIGNIFIES THE BAR SIZE.

THE UPPER LIMITS OF EXCAVATION FOR STRUCTURES SHALL BE THE EXISTING GROUNDLINE.

THE ALTERNATE CUTOFF WALL MAY BE USED IN LIEU OF THE CAST-IN-PLACE CONCRETE CUTOFF WALLS. PAYMENT SHALL BE BASED ON CONCRETE CUTOFF WALLS.

THE CONCRETE IN THE CUTOFF WALL MAY BE PLACED UNDERWATER IF THE EXCAVATION CANNOT BE DEWATERED.

ALL SPACES EXCAVATED AND NOT OCCUPIED BY THE NEW STRUCTURE SHALL BE BACKFILLED WITH STRUCTURE BACKFILL TO THE ELEVATION AND SECTION EXISTING PRIOR TO EXCAVATION WITHIN THE LENGTH OF THE CULVERT.

PLACE AN 18" (MIN.) WIDE SHEET OF "RUBBERIZED MEMBRANE WATERPROOFING" ON TOP SLAB OVER ALL CONSTRUCTION JOINTS AND EXTEND DOWN TO BOTTOM OF OUTSIDE WALLS.

SEE EXISTING NAME PLATE FOR YEAR OF ORIGINAL CONSTRUCTION FOR NEW NAME PLATE.

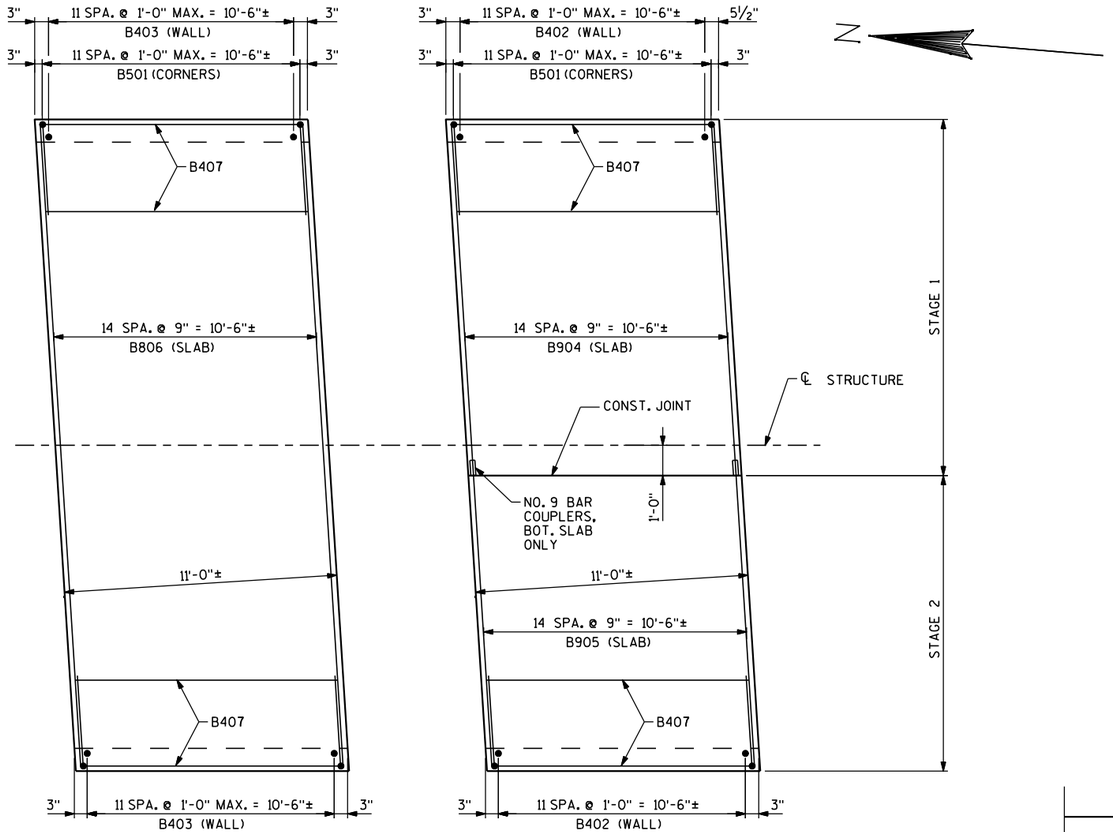

TOP SLAB BOTTOM SLAB

PLAN VIEW OF BOX
(APRON AND HEADER NOT SHOWN)

ALL LONGITUDINAL BARS IN BOX ARE B407 UNLESS SHOWN OTHERWISE.

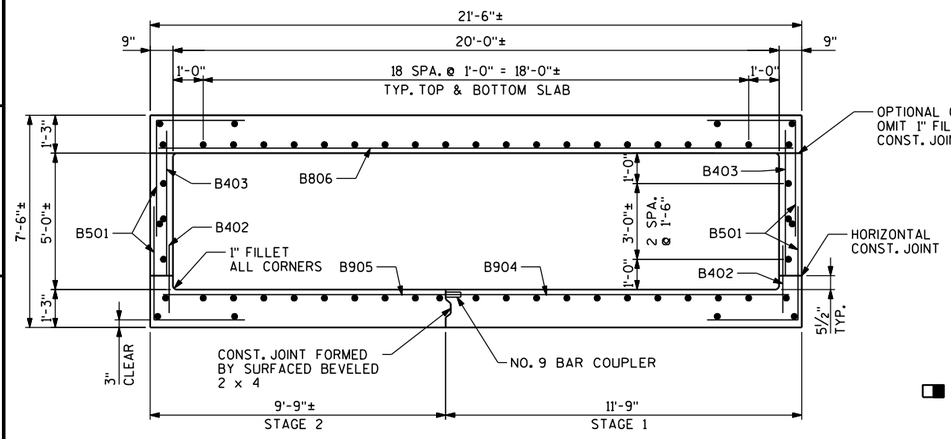

TYPICAL SECTION THROUGH BOX

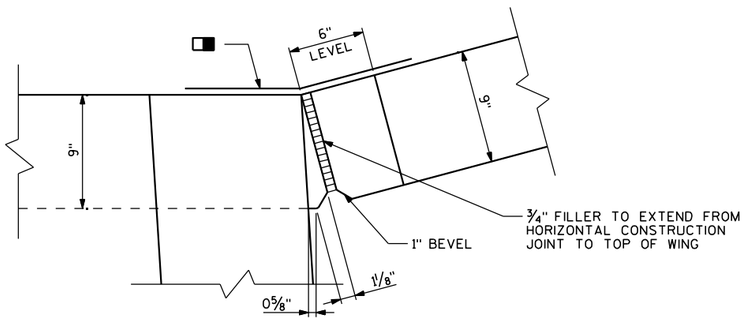

CORNER "2"
(WING 2)

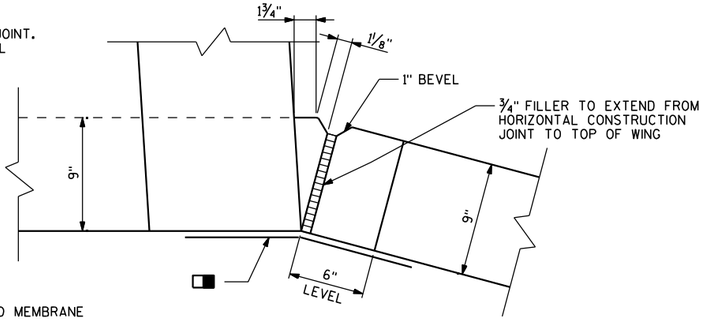

18" RUBBERIZED MEMBRANE WATERPROOFING EXTEND FROM HORIZ. CONST. JOINT TO TOP OF WALL.

CORNER "1"
(WING 1)

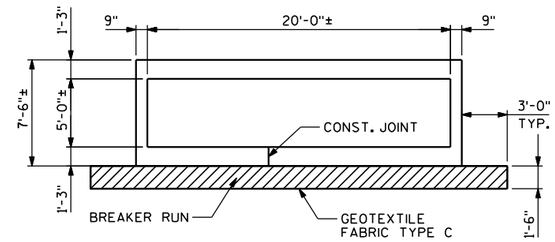

CROSS SECTION THROUGH BOX

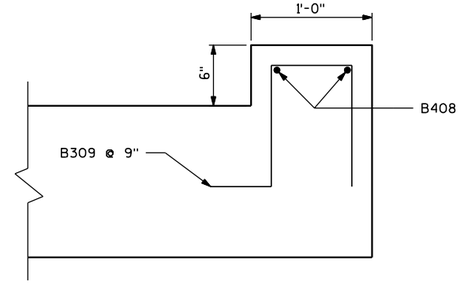

OUTLET HEADER DETAIL

NO.	DATE	REVISION	BY

STATE OF WISCONSIN
DEPARTMENT OF TRANSPORTATION
STRUCTURES DESIGN SECTION

STRUCTURE C-52-029

DRAWN BY JRJ | PLANS CK'D. SJG

CULVERT DETAILS & GENERAL NOTES

SHEET 2 OF 4

177

8

8

FILE NAME : L:\Projects\11099\Dwg\C-52-0029\08_02-Details.DGN PLOT DATE : 07/12/12 PLOT TIME : 9:19:56 AM PLOT BY : sginal

STATE PROJECT NUMBER
1643-05-75

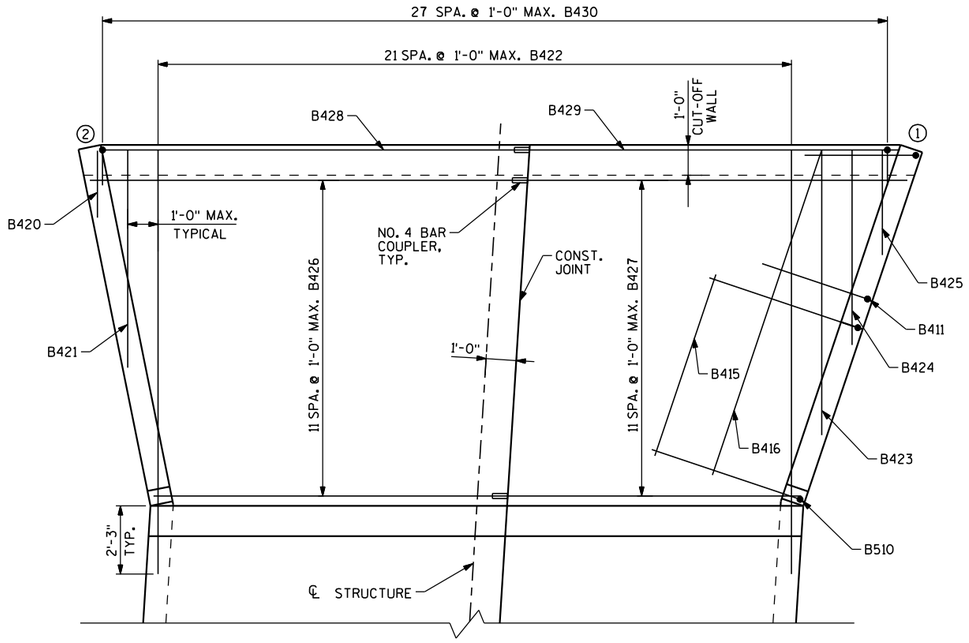

OUTLET APRON DETAIL

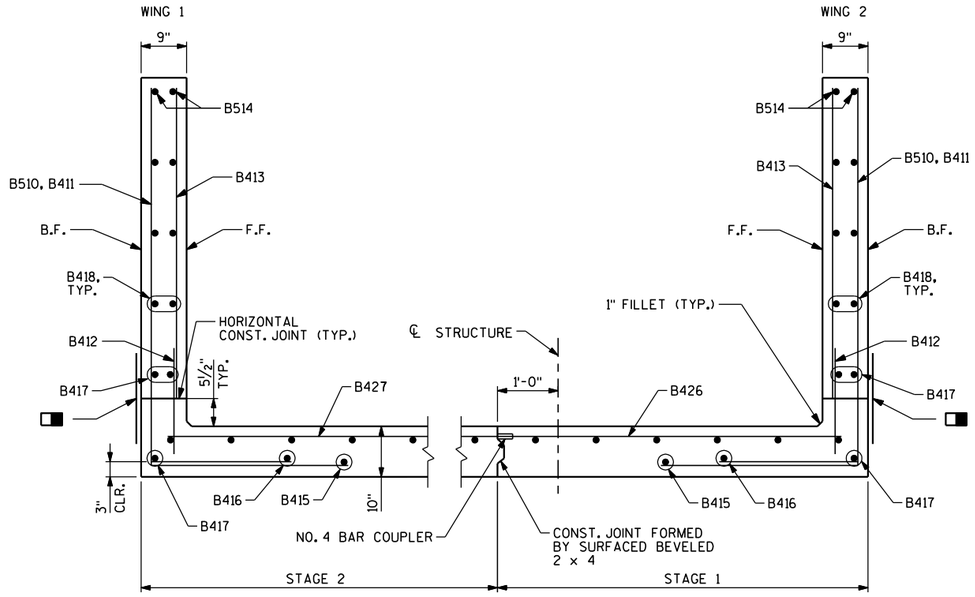

18" RUBBERIZED MEMBRANE WATERPROOFING. PLACE ALONG HORIZ. CONST. JOINT FOR ENTIRE WING LENGTH (TYP.)

SECTION THRU WINGWALLS

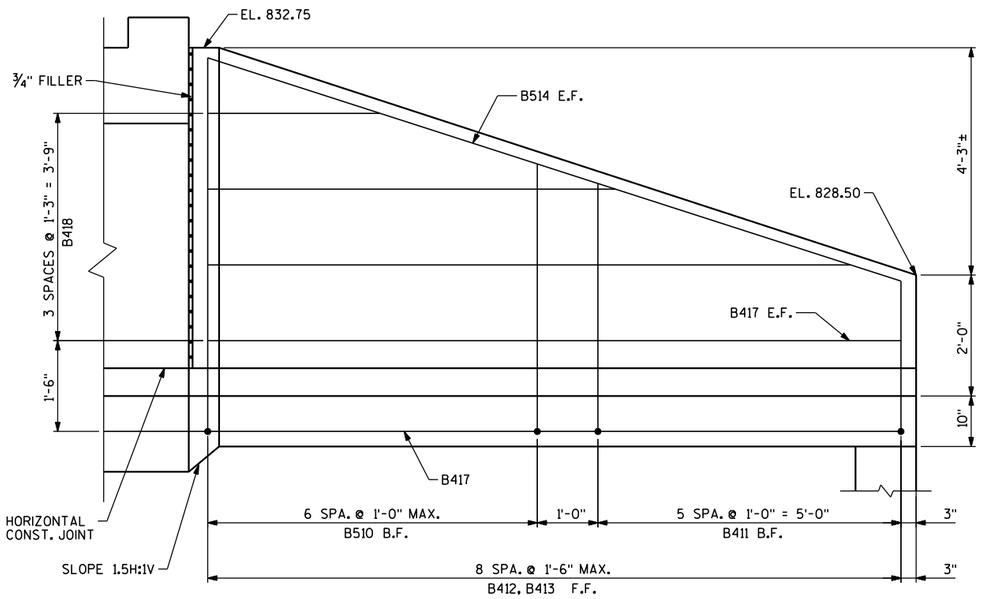

ELEVATION - WING 2

(WING 1 SIMILAR)

8

8

NO.	DATE	REVISION	BY

STATE OF WISCONSIN
DEPARTMENT OF TRANSPORTATION
STRUCTURES DESIGN SECTION

STRUCTURE C-52-029

DRAWN BY JRJ | PLANS CK'D. SJG

APRON & WING DETAILS

SHEET 3 OF 4

178

STATE PROJECT NUMBER

1643-05-75

BILL OF BARS

BAR MARK	COAT	NUMBER REQUIRED	LENGTH	BAR SERIES	BENT	LOCATION
B501		48	7'-0"		X	BOX CORNERS
B402		24	2'-6"			BOX WALL VERTICAL DOWEL
B403		24	5'-3"			BOX WALL VERTICAL
B904		15	11'-3"			BOX BOTTOM SLAB TRANSVERSE STAGE 1
B905		15	9'-6"			BOX BOTTOM SLAB TRANSVERSE STAGE 2 (THREADED)
B806		15	21'-0"			BOX TOP SLAB TRANSVERSE
B407		58	10'-8"			BOX LONGITUDINAL
B408		2	21'-2"			BOX HEADER LONGITUDINAL
B309		29	3'-7"		X	BOX HEADER STIRRUP
B510		14	10'-9"	(X)	X	WING WALL B.F. VERTICAL
B411		12	6'-11"	(X)	X	WING WALL B.F. VERTICAL
B412		18	2'-6"			WING WALL F.F. VERTICAL DOWEL
B413		18	3'-6"	(X)		WING WALL F.F. VERTICAL
B514		4	12'-3"			WING WALL TOP HORIZONTAL
B415		2	6'-4"			APRON BOTTOM SLAB
B416		2	11'-4"			APRON BOTTOM SLAB
B417		6	11'-9"			APRON & WING WALL LONGITUDINAL
B418		12	7'-5"	(X)		WING WALL E.F. HORIZONTAL
B519		34	2'-6"			BOX MASONRY ANCHOR
B420		1	2'-2"			APRON LONGITUDINAL
B421		1	7'-2"			APRON LONGITUDINAL
B422		22	14'-0"			APRON LONGITUDINAL
B423		1	9'-4"			APRON LONGITUDINAL
B424		1	6'-5"			APRON LONGITUDINAL
B425		1	3'-5"			APRON LONGITUDINAL
B426		12	12'-11"	(X)		APRON TRANSVERSE STAGE 1
B427		12	11'-0"	(X)		APRON TRANSVERSE STAGE 2 (THREADED)
B428		5	14'-0"			CUTOFF WALL HORIZONTAL STAGE 1
B429		5	12'-3"			CUTOFF WALL HORIZONTAL STAGE 2 (THREADED)
B430		28	5'-6"		X	CUTOFF WALL VERTICAL

BENDING DIMENSIONS ARE OUT TO OUT OF BARS.

THE FIRST OR FIRST TWO DIGITS OF THE BAR MARK SIGNIFIES THE BAR SIZE

(X) LENGTH SHOWN FOR BAR IS AN AVERAGE LENGTH AND SHOULD ONLY BE USED FOR BAR WEIGHT CALCULATIONS. SEE BAR SERIES TABLE FOR ACTUAL LENGTHS.

BAR SERIES TABLE

BAR MARK	NO. REQ'D.	LENGTH
B510	2 SERIES OF 7	9'-9" TO 11'-8"
B411	2 SERIES OF 6	6'-0" TO 7'-10"
B413	2 SERIES OF 9	1'-4" TO 5'-7"
B418	4 SERIES OF 3	3'-10" TO 11'-0"
B426	1 SERIES OF 12	11'-6" TO 14'-3"
B427	1 SERIES OF 12	9'-7" TO 12'-5"

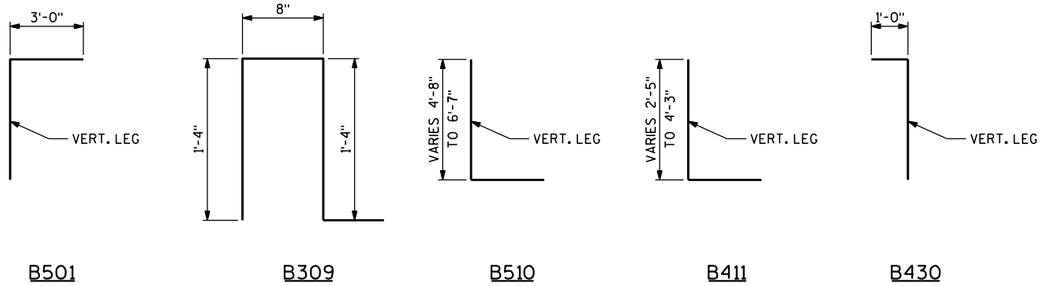

B501 B309 B510 B411 B430

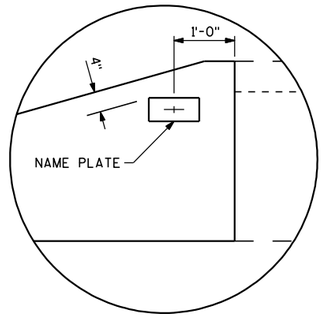

NAME PLATE LOCATION
(WING 1 ONLY)

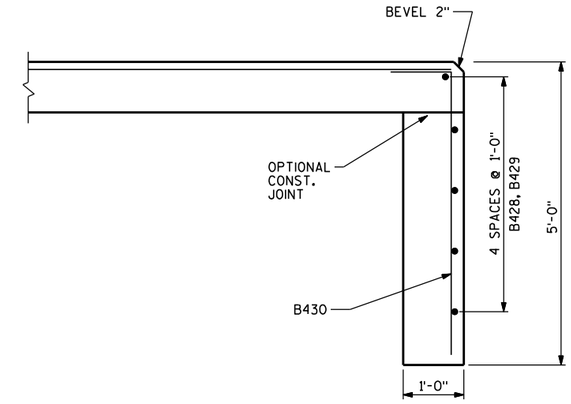

OUTLET APRON CUTOFF WALL

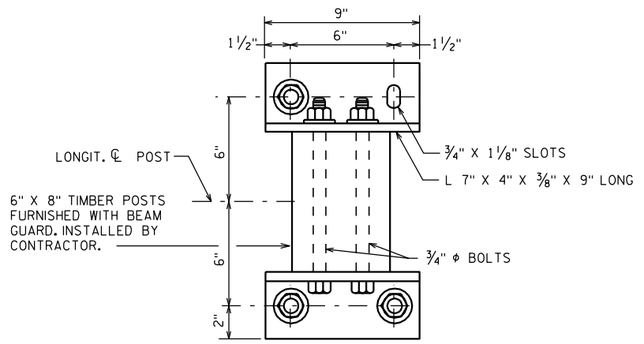

PLAN

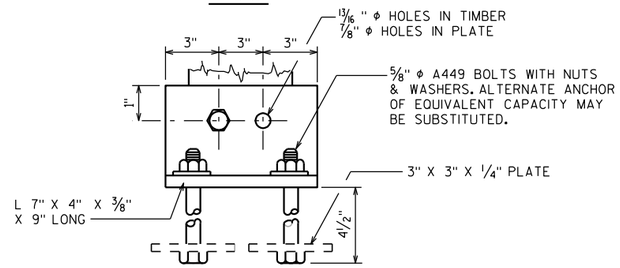

ELEVATION

TIMBER GUARD RAIL POST ANCHORS, TYPE 2

USE FOR POSTS EMBEDDED OVER 2'-0" BUT LESS THAN 4'-0"
ANCHORS NOT REQ'D FOR POSTS EMBEDDED 4'-0" OR MORE
HARDWARE FOR POST ANCHORS SHALL BE PAID FOR AS
"STRUCTURAL STEEL CARBON"

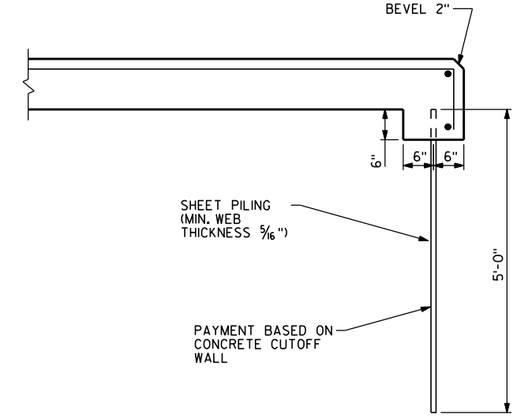

ALTERNATE CUTOFF WALL

NO.	DATE	REVISION	BY

STATE OF WISCONSIN
DEPARTMENT OF TRANSPORTATION
STRUCTURES DESIGN SECTION

STRUCTURE C-52-029

DRAWN BY JRJ | PLANS CK'D. SJG

DETAILS & BILL OF BARS

SHEET 4 OF 4

179

8

8

NOTE: STRUCTURE BACKFILL REQUIRED BEHIND ALL WING WALLS.

STATE PROJECT NUMBER

1643-05-75

▲ SEE CORNER DETAILS SHT 5
■ NAME PLATE LOCATION (SEE SHT 5)
* BUILD APRON AND END OF BOX LEVEL
▲ VERT. CONST. JOINT (TYP.)
○ INDICATES WING NUMBER

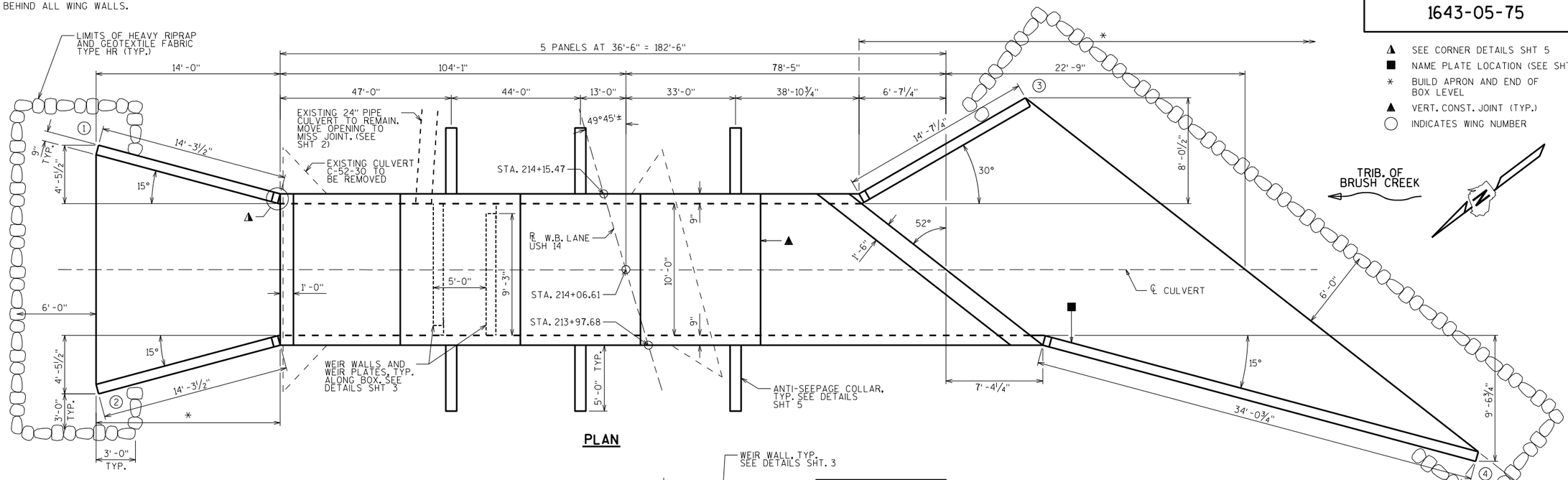

PLAN

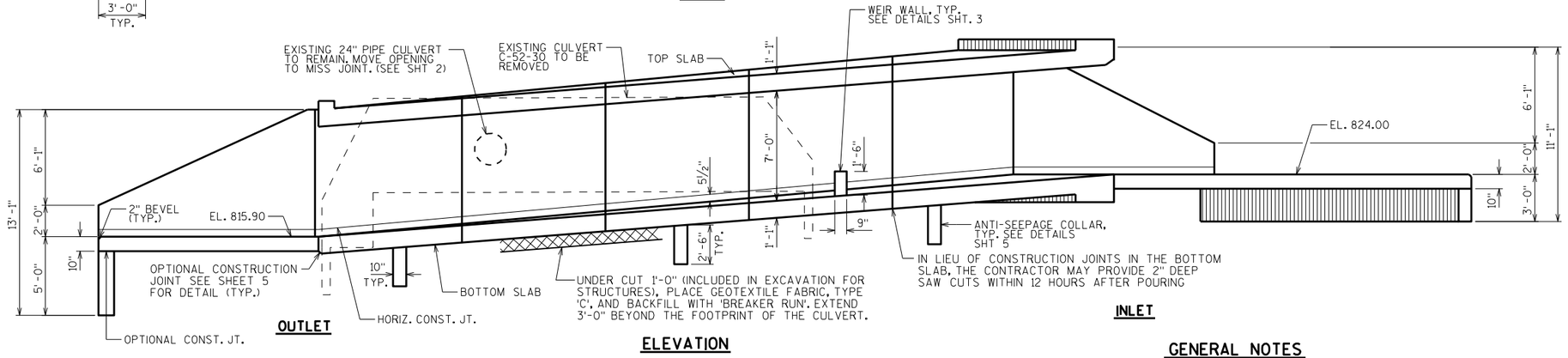

OUTLET

ELEVATION

INLET

LIST OF DRAWINGS

1. LAYOUT
2. BOX DETAILS
3. WEIR WALL DETAILS
4. APRON DETAILS
5. DETAILS
6. SUBSURFACE EXPLORATION

STRUCTURE DESIGN CONTACT:
DANIELLE DE TENNIS (608) 266-8689
LAURA SHADEWALD (608) 267-9592

DESIGN DATA

LIVE LOAD:

DESIGN LOADING: HL-93
INVENTORY RATING FACTOR: RF=1.05
OPERATING RATING FACTOR: RF=1.35
WISCONSIN STANDARD PERMIT VEHICLE (WIS.-SPV): 255 (KIPS)

EARTHLOAD: DESIGNED FOR 12.0 FT. OF FILL.

ULTIMATE DESIGN STRESSES:

CONCRETE MASONRY, GRADE A-FA — f'_c = 3500 P.S.I.
HIGH STRENGTH BAR STEEL REINFORCEMENT — f_y = 60000 P.S.I.
STRUCTURAL CARBON STEEL ASTM A709 GRADE 36 — f_y = 36000 P.S.I.

HYDRAULIC DATA

100 YEAR FREQUENCY

Q_{100} = 310 C.F.S.
VEL. =6.81 F.P.S.
HW.= EL. 829.70
DRAINAGE AREA= 0.40 SQ. MI.
ROAD OVERTOPPING = NA
SCOUR CRITICAL CODE = 8

2 YEAR FREQUENCY

Q_2 = 50 C.F.S.
$HW._2$ = EL. 826.52

TRAFFIC VOLUME

USH 14
A.D.T. = 6200 (2031)
R.D.S. = 60 M.P.H.

TOTAL ESTIMATED QUANTITIES

BID ITEMS

203.0200	REMOVING OLD STRUCTURE STA. 214+06.61	1	LS
206.2000	EXCAVATION FOR STRUCTURES CULVERTS C-52-166	1	LS
210.0100	BACKFILL STRUCTURE	1,643	CY
311.0115	BREAKER RUN	148	CY
504.0100	CONCRETE MASONRY CULVERTS	307	CY
505.0410	BAR STEEL REINFORCEMENT HS CULVERTS	32,370	LB
505.0610	BAR STEEL REINFORCEMENT HS COATED CULVERTS	1,895	LB
516.0500	RUBBERIZED MEMBRANE WATERPROOFING	54	SY
606.0300	RIPRAP HEAVY	37	CY
645.0105	GEOTEXTILE FABRIC TYPE C	495	SY
645.0120	GEOTEXTILE FABRIC TYPE HR	100	SY
SPV.0060	MASONRY ANCHORS TYPE S 3/8-INCH	144	EACH
SPV.0060	WEIR PLATES	36	EACH

NON-BID ITEMS

FILLER	¾"	SIZE
ROOFING FELT	30	LB

GENERAL NOTES

DRAWINGS SHALL NOT BE SCALED.

BAR STEEL REINFORCEMENT SHALL BE EMBEDDED 2" CLEAR UNLESS SHOWN OR NOTED OTHERWISE.

THE UPPER LIMITS OF EXCAVATION FOR STRUCTURES SHALL BE THE EXISTING GROUNDLINE.

ALL SPACES EXCAVATED AND NOT OCCUPIED BY THE NEW STRUCTURE SHALL BE BACKFILLED WITH STRUCTURE BACKFILL TO THE TOP OF THE BOX WITHIN THE LENGTH OF THE CULVERT.

THE CONCRETE IN THE CUTOFF WALLS MAY BE PLACED UNDERWATER IF THE EXCAVATION CANNOT BE DEWATERED.

PLACE A 18" (MIN.) WIDE SHEET OF 'RUBBERIZED MEMBRANE WATERPROOFING' ON TOP SLAB OVER ALL CONSTRUCTION JOINTS AND EXTEND DOWN TO BOTTOM OF OUTSIDE WALLS.

THE CONTRACTOR MAY FURNISH A PRECAST CONCRETE BOX CULVERT IN LIEU OF THE CAST-IN-PLACE BOX CULVERT WITH THE ACCEPTANCE OF THE SHOP DRAWINGS BY THE STRUCTURES DEVELOPMENT SECTION. THE PRECAST CONCRETE BOX CULVERT SHALL CONFORM TO PRECAST DETAILS ON CHAPTER 36 STANDARDS OF THE CURRENT WISC. DOT BRIDGE MANUAL. PAYMENT FOR THE PRECAST CULVERT SHALL BE BASED ON THE QUANTITIES AND PRICES BID FOR THE ITEMS LISTED IN THE "TOTAL ESTIMATED QUANTITIES".

CONTRACTOR MAY ELECT TO SUBSTITUTE #1 OR #2 CONCRETE COARSE AGGREGATE, SELECT CRUSHED MATERIAL OR OTHER GRANULAR MATERIAL AS APPROVED BY THE FIELD ENGINEER, IN LIEU OF THE BREAKER RUN, TO BE UTILIZED AS A CONSTRUCTION PLATFORM FOR THE BOX. THE CONTRACTOR IS RESPONSIBLE FOR BASE STABILITY WITH ANY SUBSTITUTED MATERIAL.

USE CAUTION WHEN REMOVING EXISTING BOX CULVERT TO PRESERVE EXISTING PIPE, WHICH WILL BE INCORPORATED INTO THE NEW BOX CULVERT. CONTRACTOR IS RESPONSIBLE TO REPAIR OR REPLACE DAMAGED PIPE CULVERT.

NO.	DATE	REVISION	BY

Plans Prepared By WISDOT
BUREAU OF STRUCTURES

ACCEPTED William C. Ducheck KAR 10/26/12
CHIEF STRUCTURES DESIGN ENGINEER DATE

STRUCTURE C-52-166

USH 14 OVER BRUSH CREEK

COUNTY RICHLAND | TOWN ~~CITY/VILLAGE~~ DAYTON

DESIGN SPEC. AASHTO LRFD DESIGN SPEC. 5th EDITION

DESIGNED BY	DESIGN CK'D.	DRAWN BY	PLANS CK'D.
DFD	NAR	DFD	NAR

LAYOUT

SHEET 1 OF 6

180

I.D. 1643-05-05

DATE: JULY 2012

SCALE = 4

STATE PROJECT NUMBER

1643-05-75

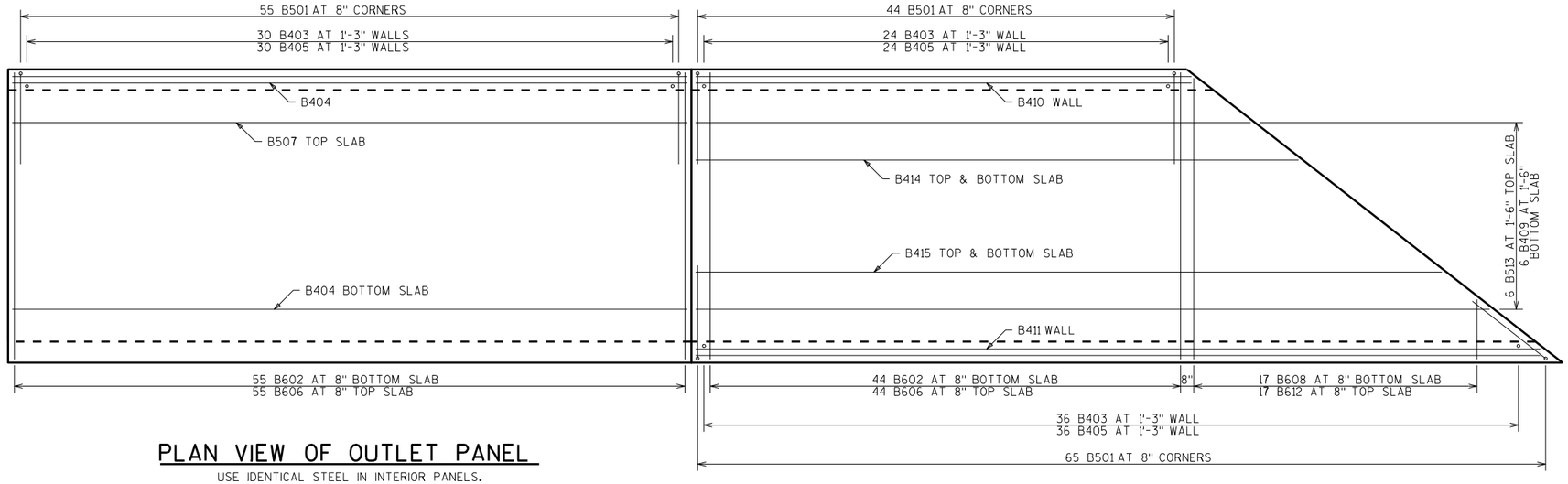

PLAN VIEW OF OUTLET PANEL

USE IDENTICAL STEEL IN INTERIOR PANELS.
APRON AND HEADER ARE NOT SHOWN.

PLAN VIEW OF INLET PANEL

APRON AND HEADER ARE NOT SHOWN.

BILL OF BARS

THE FIRST OR FIRST AND SECOND DIGIT OF THE MARK SIGNIFIES THE BAR SIZE. LONGER BARS OF THE SAME SIZE MAY BE SUBSTITUTEDFOR SHORTER BARS. PAYMENT BASED ON BAR LENGTHS AS DETAILED.

MARK	NUMBER REQ'D.	LENGTH	BENT	BAR SERIES	LOCATION
B501	1098	8-8	X		CORNERS
B602	264	11-2			BOTTOM SLAB TRANS.
B403	300	2-5			WALLS-DOWELS VERT.
B404	112	36-0			TOP&BOTTOM SLAB & WALL
B405	300	7-5			WALLS VERT.
B606	264	11-2			TOP SLAB TRANS.
B507	24	36-0			TOP SLAB LONGIT.
B608	17	6-7		⚠	BOTTOM SLAB TRANS.
B409	6	36-0		⚠	BOTTOM SLAB LONGIT.
B410	9	28-10			WALLS LONGIT. INLET PANEL
B411	9	42-7			WALLS LONGIT. INLET PANEL
B612	17	6-7		⚠	TOP SLAB TRANS.
B513	6	36-0		⚠	TOP SLAB LONGIT.
B414	2	33-4			TOP&BOTTOM SLAB LONGIT.
B415	2	38-8			TOP&BOTTOM SLAB LONGIT.
B416	2	11-2			HEADERS HORIZ.
B1017	12	18-2			HEADERS HORIZ.
B318	16	3-6	X		HEADER STIRRUPS VERT.
B319	25	5-2	X		HEADER STIRRUPS VERT.
B320	25	4-10	X		HEADER STIRRUPS VERT.
B521	168	4-0			VERT. CONST. JOINT
B822	16	8-8			EXISTING PIPE OPENING
B523	8	5-6			EXISTING PIPE OPENING

⚠ LENGTH SHOWN FOR BAR IS AN AVERAGE LENGTH AND SHOULD ONLY BE USED FOR BAR WEIGHT CALCULATIONS. SEE BAR SERIES TABLE FOR ACTUAL LENGTHS.

BAR SERIES TABLE

MARK	NO. REQD.	LENGTH
B608	1 SERIES OF 17	2'-5" TO 10'-9"
B409	1 SERIES OF 6	31'-2" TO 40'-9"
B612	1 SERIES OF 17	2'-5" TO 10'-9"
B513	1 SERIES OF 6	31'-2" TO 40'-9"

BUNDLE AND TAG EACH SERIES SEPARATELY.

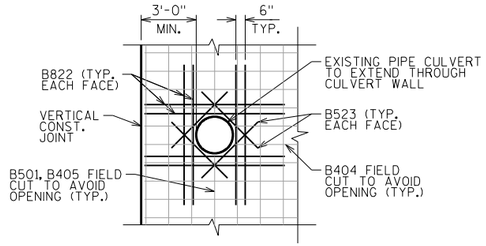

DETAIL AT EXISTING PIPE CULVERT

TYP. EACH FACE

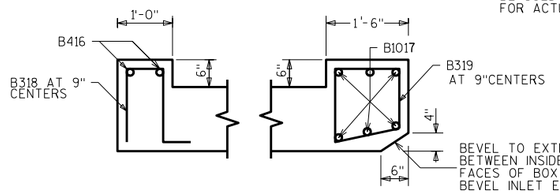

SECTION THRU OUTLET TOP HEADER

SECTION THRU INLET TOP HEADER

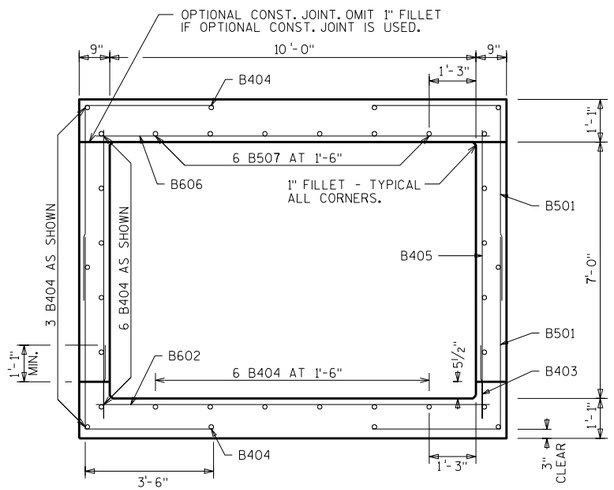

TYPICAL SECTION THRU BOX

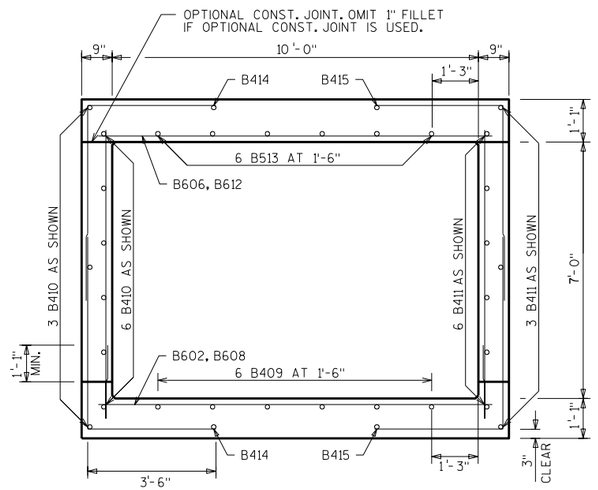

SECTION THRU BOX

INLET PANEL

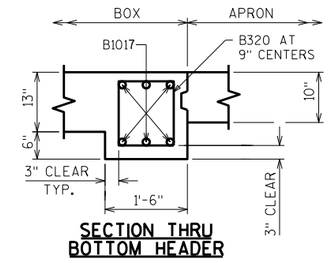

SECTION THRU BOTTOM HEADER

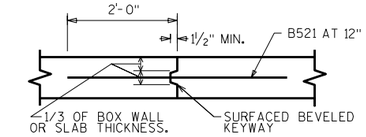

VERTICAL CONSTRUCTION JOINT

2" DEEP SAW CUT WITHIN 12 HOURS AFTER POURING MAY BE USED IN LIEU OF CONST. JT. IN BOTTOM SLAB.

NOTE: CONTRACTOR MAY UTILIZE MASONRY ANCHORS TYPE S (EPOXY ANCHORED) 5/8-INCH WITH 1'-3" MINIMUM EMBEDMENT AND A MINIMUM PULLOUT CAPACITY OF 19 KIPS. INCIDENTAL TO "BAR STEEL REINFORCEMENT HS CULVERTS".

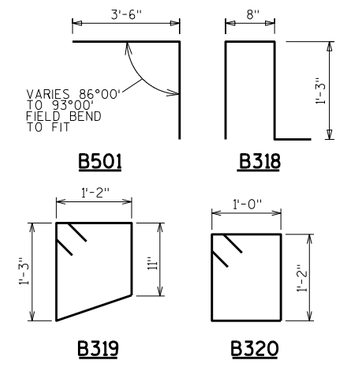

NO.	DATE	REVISION	BY

STATE OF WISCONSIN
DEPARTMENT OF TRANSPORTATION
STRUCTURES DESIGN SECTION

STRUCTURE C-52-166

DRAWN BY DFD | PLANS CK'D. NAR

BOX DETAILS

SHEET 2

181

SCALE = 4

8

8

STATE PROJECT NUMBER

1643-05-75

BILL OF BARS

THE FIRST OR FIRST AND SECOND DIGIT OF THE MARK SIGNIFIES THE BAR SIZE. LONGER BARS OF THE SAME SIZE MAY BE SUBSTITUTEDFOR SHORTER BARS. PAYMENT BASED ON BAR LENGTHS AS DETAILED.

MARK	NUMBER REQ'D.	LENGTH	BENT	BAR SERIES	LOCATION
W301	185	8 -11			WEIR WALL HORIZONTAL
W302	333	4 -11	YES		WEIR WALL STIRRUP

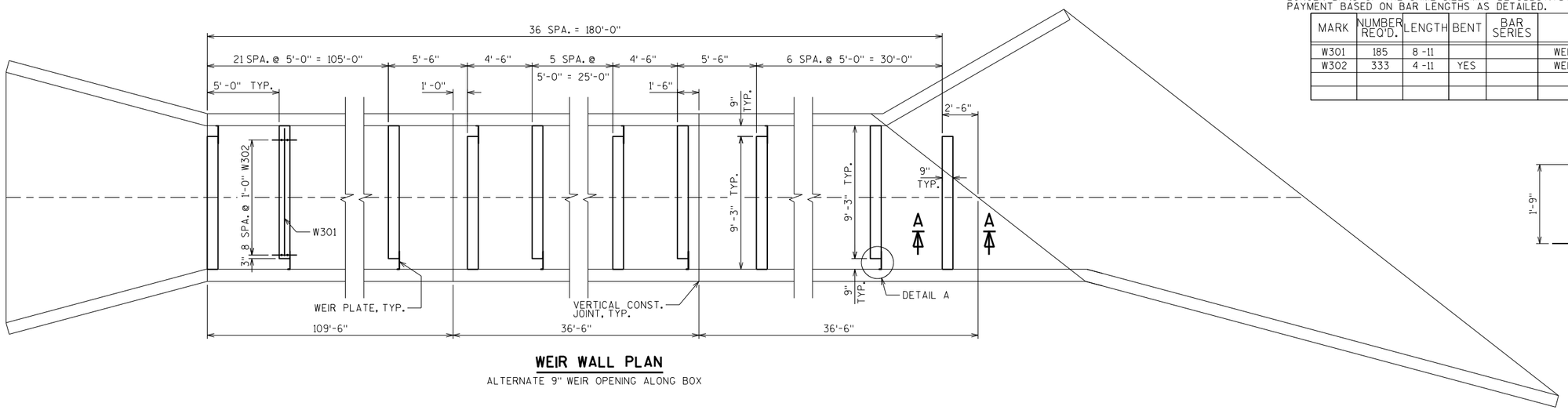

WEIR WALL PLAN

ALTERNATE 9" WEIR OPENING ALONG BOX

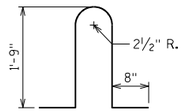

W302

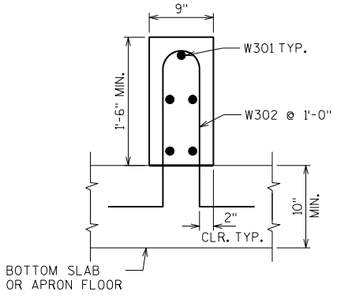

SECTION A-A

TYPICAL SECTION THRU WEIR WALL

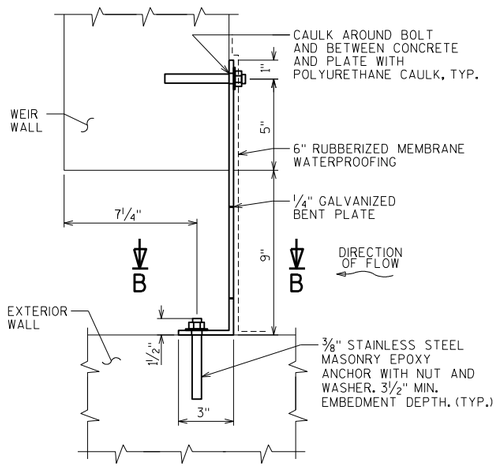

DETAIL A

TYP. AT NORTH CULVERT WALL. TYP. MIRRORED AT SOUTH CULVERT WALL

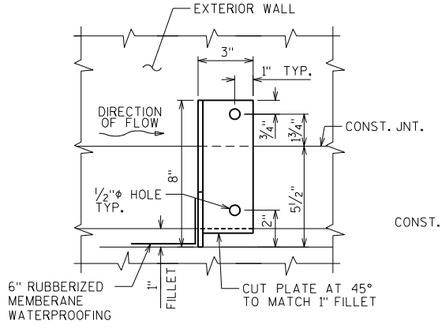

SECTION B-B

SHOWING WEIR PLATE

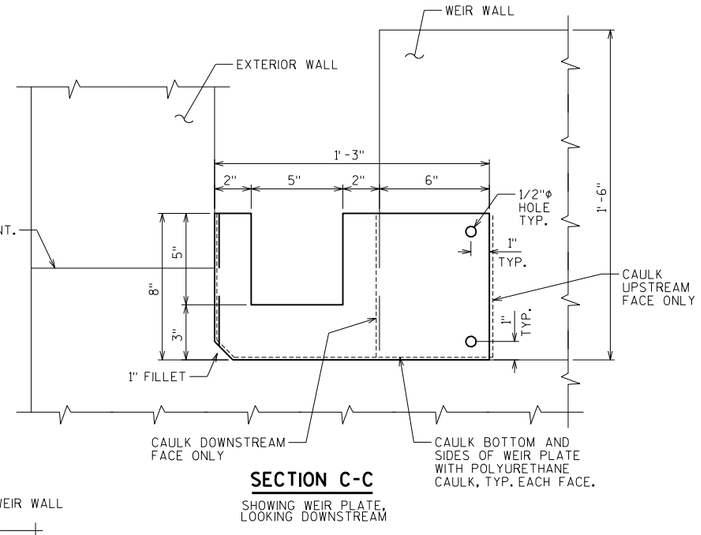

SECTION C-C

SHOWING WEIR PLATE, LOOKING DOWNSTREAM

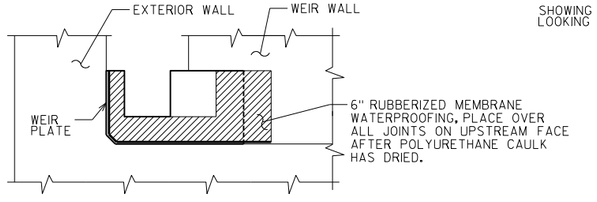

RUBBERIZED MEMBRANE DETAIL

SHOWING WEIR PLATE ELEVATION, LOOKING DOWNSTREAM

NO.	DATE	REVISION	BY

STATE OF WISCONSIN
DEPARTMENT OF TRANSPORTATION
STRUCTURES DESIGN SECTION

STRUCTURE C-52-166

DRAWN BY DFD | PLANS CK'D. NAR

WEIR WALL DETAILS

SHEET 3

182

SCALE = 4

8

8

STATE PROJECT NUMBER

1643-05-75

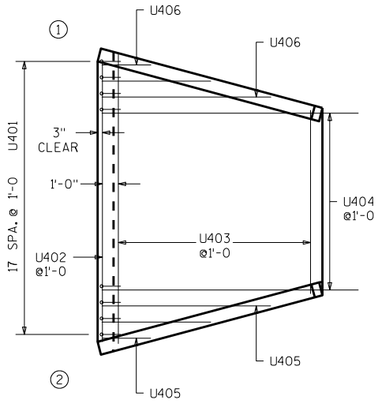

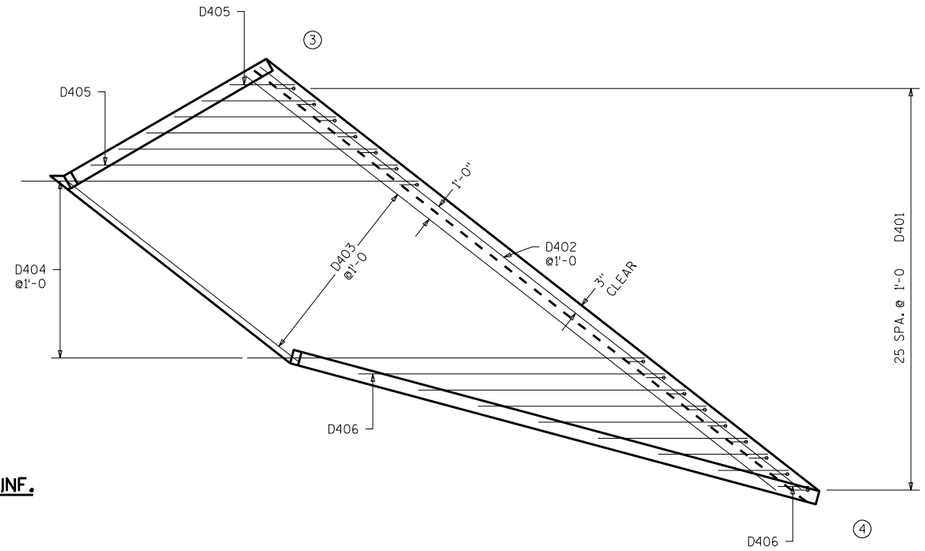

APRON REINF.

▲ 18" RUBBERIZED MEMBRANE WATER-PROOFING. PLACE ALONG HORIZ. CONST. JT. FOR ENTIRE WING LENGTH (TYP.).

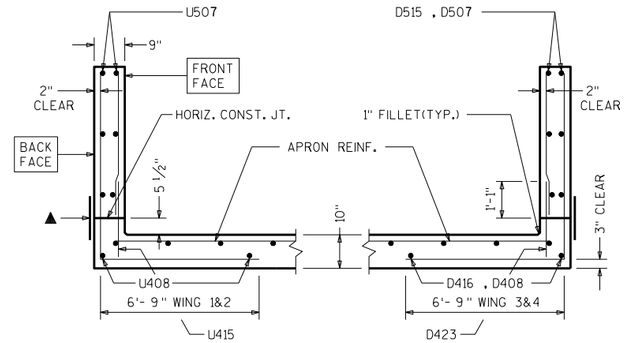

SECTION THRU WINGS

AT RIGHT ANGLES TO WING WALLS

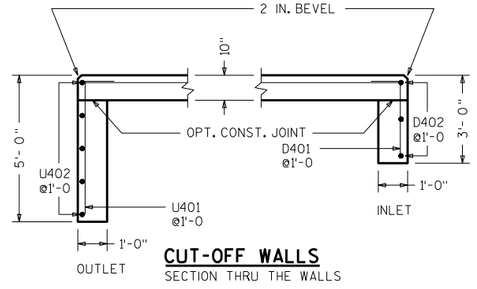

CUT-OFF WALLS

SECTION THRU THE WALLS

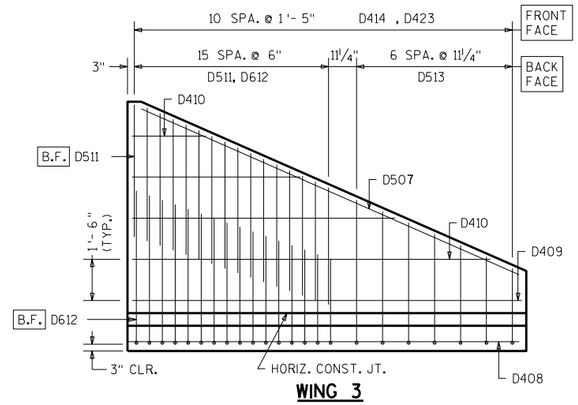

WING 3

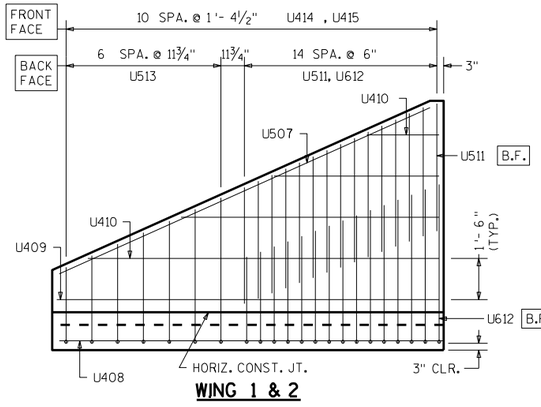

WING 1 & 2

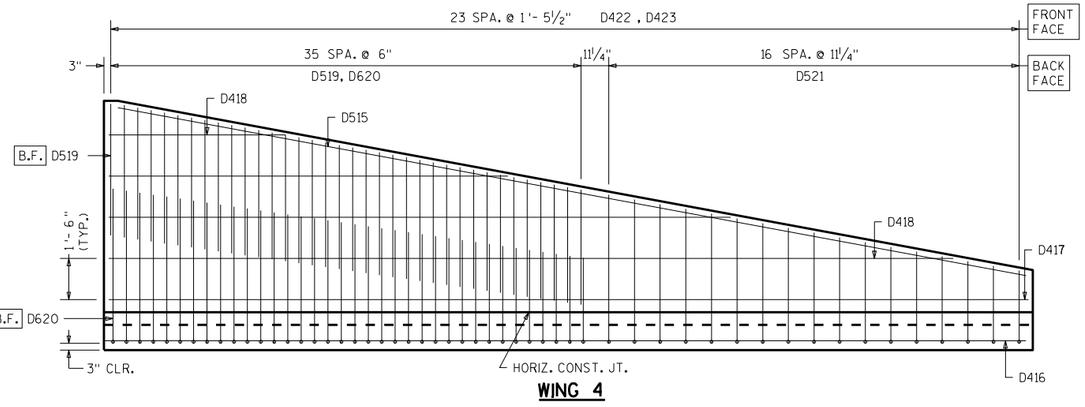

WING 4

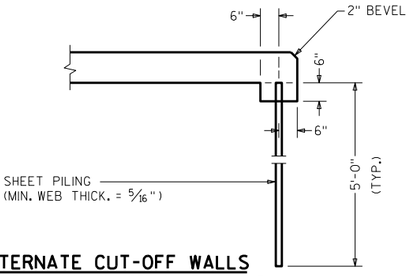

ALTERNATE CUT-OFF WALLS

THE ABOVE ALT. MAY BE USED IN LIEU OF THE CAST-IN-PLACE CONC. CUT-OFF WALLS. PAYMENT WILL BE BASED ON THE CONC. CUT-OFF WALLS.

NO.	DATE	REVISION	BY

STATE OF WISCONSIN
DEPARTMENT OF TRANSPORTATION
STRUCTURES DESIGN SECTION

STRUCTURE C-52-166

DRAWN BY DFD | PLANS CK'D. NAR

APRON DETAILS

SHEET 4

183

SCALE = 4

8

8

STATE PROJECT NUMBER

1643-05-75

BILL OF BARS

THE FIRST DIGIT OF THE BAR MARK SIGNIFIES THE BAR SIZE.
THE DIMENSION IN THE BENT COLUMN IS THE OUT TO OUT HORIZONTAL LEG OF AN L - SHAPED BAR.

BAR MARK	COAT	NO. REQ'D.	LENGTH	BENT	BAR SERIES	LOCATION
U401		18	5 - 6	1 - 0		OUTLET APRON AND CUTOFF WALL
U402		5	17 - 6			OUTLET APRON AND CUTOFF WALL
U403		13	14 - 9		*	" APRON
U404		12	16 - 0			" APRON
U405		3	6 - 7		*	" APRON
U406		3	6 - 7		*	" APRON
U507		4	14 - 11			WINGS 1 AND 2 -HORIZONTAL -BOTH FACES
U408		4	13 - 10			WINGS " -HORIZONTAL - APRON BOTT. SLAB
U409		4	13 - 10			WINGS " -HORIZONTAL - BOTH FACES
U410		16	7 - 8		*	WINGS " -HORIZONTAL - BOTH FACES
U511		30	4 - 0			WINGS " -VERTICAL - BACK FACE
U612	X	30	11 - 5	6 - 9	*	WINGS " -VERTICAL - BACK FACE
U513	X	14	10 - 4	6 - 9	*	WINGS " -VERTICAL - BACK FACE
U414		22	4 - 5		*	WINGS " -VERTICAL - FRONT FACE
U415	X	22	2 - 2			WINGS 1 AND 2 - DOWELS - FRONT FACE
D401		26	3 - 6	1 - 0		INLET APRON AND CUTOFF WALL
D402		3	43 - 5			INLET APRON AND CUTOFF WALL
D403		13	30 - 10		*	" APRON
D404		12	24 - 8			" APRON
D405		6	11 - 5		*	" APRON
D406		8	11 - 3		*	" APRON
D507		2	15 - 2			WING 3 -HORIZONTAL - BOTH FACES
D408		2	14 - 2			WING " -HORIZONTAL - APRON BOTT. SLAB
D409		2	14 - 2			WING " -HORIZONTAL - BOTH FACES
D410		8	7 - 10		*	WING " -HORIZONTAL - BOTH FACES
D511		16	4 - 0			WING " -VERTICAL - BACK FACE
D612	X	16	11 - 4	6 - 9	*	WING " -VERTICAL - BACK FACE
D513	X	7	10 - 4	6 - 9	*	WING " -VERTICAL - BACK FACE
D414		11	4 - 6		*	WING " -VERTICAL - FRONT FACE
D515		2	33 - 11			WING 4 -HORIZONTAL - BOTH FACES
D416		2	33 - 8			WING " -HORIZONTAL - APRON BOTT. SLAB
D417		2	33 - 8			WING " -HORIZONTAL - BOTH FACES
D418		8	18 - 3		*	WING " -HORIZONTAL - BOTH FACES
D519		36	4 - 0			WING " -VERTICAL - BACK FACE
D620	X	36	11 - 4	6 - 9	*	WING " -VERTICAL - BACK FACE
D521	X	17	10 - 5	6 - 9	*	WING " -VERTICAL - BACK FACE
D422		24	4 - 5		*	WING " -VERTICAL - FRONT FACE
D423	X	35	2 - 2			WINGS 3 AND 4 - DOWELS - FRONT FACE
C403		36	4 - 6	YES		ANTI-SEEP COLLAR-STIRRUPS
C404		60	3 - 4			ANTI-SEEP COLLAR-DOWELS
C405		60	9 - 0			ANTI-SEEP COLLAR-VERT.
C406		12	21 - 2			ANTI-SEEP COLLAR-HORIZ.
C407		120	4 - 8			ANTI-SEEP COLLAR-HORIZ.

* LENGTH SHOWN FOR BAR IS AN AVERAGE LENGTH AND SHOULD ONLY BE USED FOR BAR WEIGHT CALCULATIONS. SEE BAR SERIES TABLE FOR ACTUAL LENGTHS.

BAR SERIES TABLE --- BUNDLE AND TAG EACH SERIES SEPARATELY

BAR MARK	NO. REQ'D.	LENGTHS FOR EACH SERIES
U403	1 SERIES OF 13	11 - 6 TO 18 - 0
U405	1 SERIES OF 3	2 - 10 TO 10 - 3
U406	1 SERIES OF 3	2 - 10 TO 10 - 3
U410	4 SERIES OF 4	2 - 6 TO 12 - 9
U612	2 SERIES OF 15	9 - 11 TO 12 - 11
U513	2 SERIES OF 7	9 - 0 TO 11 - 7
U414	2 SERIES OF 11	1 - 5 TO 7 - 5
D403	1 SERIES OF 13	19 - 1 TO 42 - 6
D405	1 SERIES OF 6	3 - 11 TO 18 - 11
D406	1 SERIES OF 8	2 - 8 TO 19 - 10
D410	2 SERIES OF 4	2 - 7 TO 13 - 0
D612	1 SERIES OF 16	9 - 9 TO 12 - 11
D513	1 SERIES OF 7	9 - 1 TO 11 - 6
D414	1 SERIES OF 11	1 - 5 TO 7 - 5
D418	2 SERIES OF 4	5 - 10 TO 30 - 8
D620	1 SERIES OF 36	9 - 9 TO 12 - 11
D521	1 SERIES OF 17	9 - 0 TO 11 - 9
D422	1 SERIES OF 24	1 - 4 TO 7 - 5

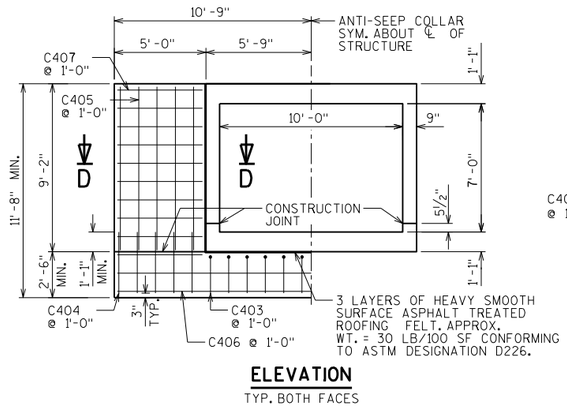

ELEVATION
TYP. BOTH FACES

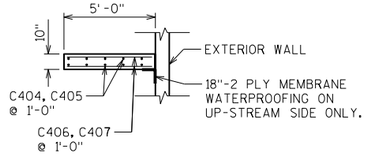

SECTION D-D

ANTI-SEEP COLLAR DETAILS

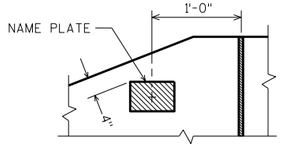

NAME PLATE LOCATION
WING 4

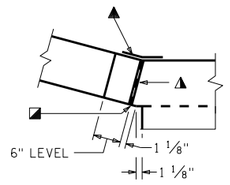

CORNER 1

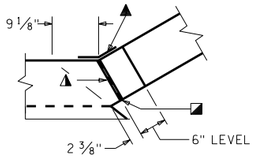

CORNER 3

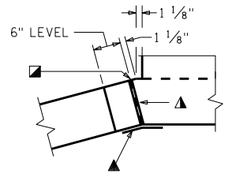

CORNER 2

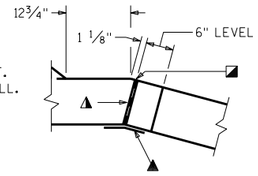

CORNER 4

▲ 3/4" FILLER TYPICAL. EXTEND FILLER FROM HORIZ. CONST. JT. TO TOP OF WING.

◪ 1" BEVEL TYPICAL

▲ 18" RUBBERIZED MEMBRANE WATER-PROOFING. EXTEND FROM HORIZ. CONST. JT. TO TOP OF WALL.

CORNER DETAILS

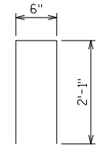

C403

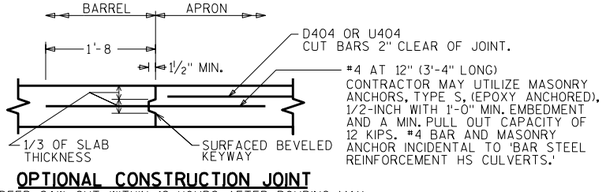

OPTIONAL CONSTRUCTION JOINT

2" DEEP SAW CUT WITHIN 12 HOURS AFTER POURING MAY BE USED IN LIEU OF CONST. JT. IN BOTTOM SLAB.

NO.	DATE	REVISION	BY

STATE OF WISCONSIN
DEPARTMENT OF TRANSPORTATION
STRUCTURES DESIGN SECTION

STRUCTURE C-52-166

DRAWN BY DFD | PLANS CK'D. NAR

DETAILS

SHEET 5

184

SCALE = 4

8

8

STH 171 - RICHLAND CENTER
0.24 M E STH 171 TO HIVE DRIVE

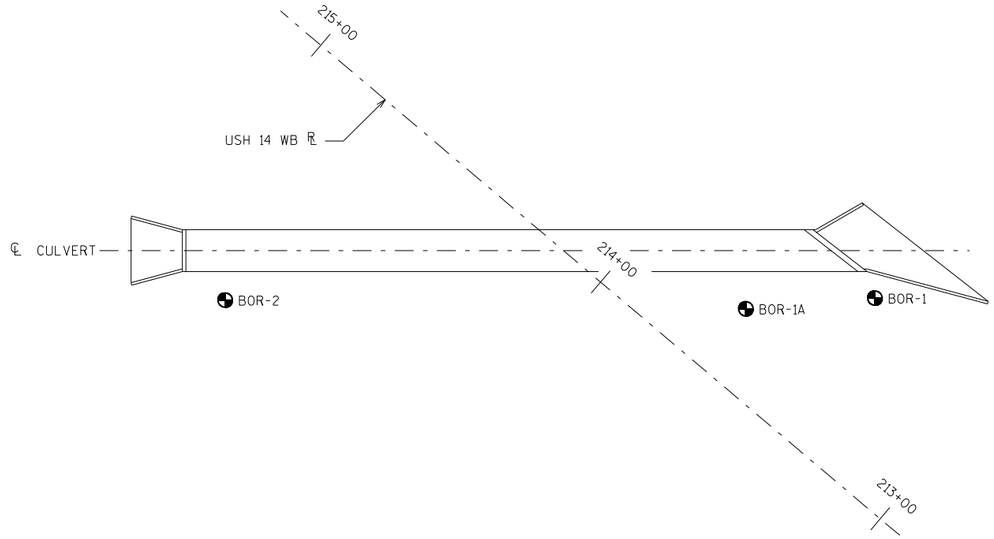

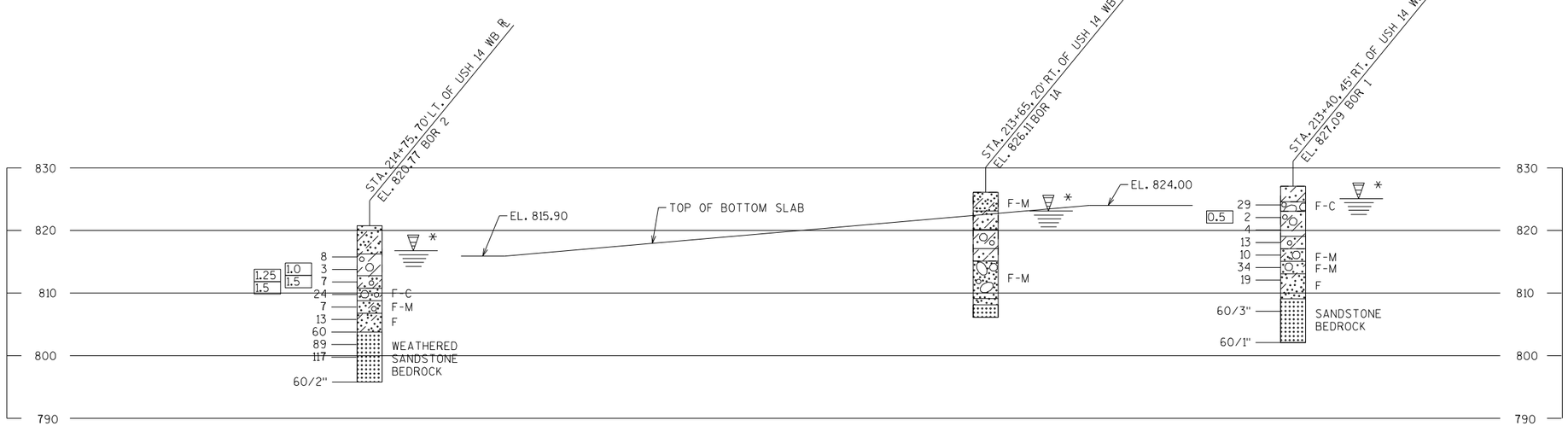

STATE PROJECT NUMBER

1643-05-75

ABBREVIATIONS

F — FINE M — MEDIUM C — COARSE
WS — WEATHERED SO — SOUND

MATERIAL SYMBOLS

TOPSOIL, SILT, SANDSTONE
SAND, PEAT, LIMESTONE
GRAVEL, CLAY, IGNEOUS ROCK

LEGEND OF PROBING

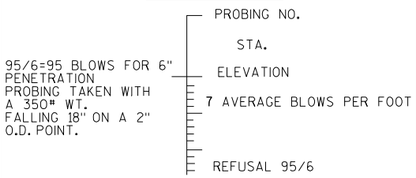

LEGEND OF BORING

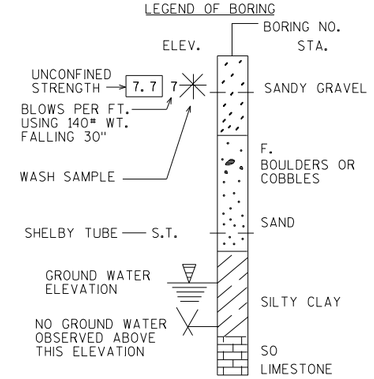

UNLESS OTHERWISE SPECIFIED, THE BLOWS PER FOOT AT THE LOCATIONS INDICATED ARE BASED ON DRIVING A 2" O.D. X 1.4" I.D. SPLIT SPOON SAMPLER WITH A 140# HAMMER HAVING A FREE FALL OF 30". THE BLOW COUNT IS TAKEN IN UNDISTURBED SOIL IMMEDIATELY BELOW A CASED OR OPEN HOLE ELIMINATING SIDE FRICTION ON THE DRIVE PIPE.

SUBSURFACE EXPLORATION FOR FOUNDATION DESIGN AND BIDDERS INFORMATION

TO OBTAIN RELATIVE DATA CONCERNING THE CHARACTER OF MATERIAL IN AND UPON WHICH THE FOUNDATION MIGHT BE BUILT, BORINGS AND/OR SOUNDINGS WERE MADE AT POINTS APPROXIMATELY AS INDICATED ON THIS DRAWING. THE DATA PRESENTED HEREIN REPRESENTS THE FINDINGS OF THE SUBSURFACE EXPLORATIONS MADE. HOWEVER, BECAUSE THE DEPTHS INVESTIGATED ARE LIMITED AND THE AREA OF THE BORINGS AND/OR SOUNDINGS IS VERY SMALL IN RELATION TO THE ENTIRE AREA, THE WISCONSIN DEPARTMENT OF TRANSPORTATION DOES NOT WARRANT CONDITIONS BELOW THE DEPTHS INVESTIGATED OR THAT THE CLASSIFICATION OF MATERIAL ENCOUNTERED IN THESE INVESTIGATIONS IS NECESSARILY TYPICAL OF THE ENTIRE SITE.

NO.	DATE	REVISION	BY

STATE OF WISCONSIN
DEPARTMENT OF TRANSPORTATION
STRUCTURES DESIGN SECTION

STRUCTURE C-52-166

DRAWN BY DFD | PLANS CK'D. NAR

SUBSURFACE EXPLORATION

SHEET 6

185

SCALE =

DIVSION 1 - USH 14 AT CTH Z

STATION	DISTANCE	AREA (SF) CUT	AREA (SF) FILL	INCREMENTAL VOL (CY) (UNADJUSTED) CUT NOTE 1	INCREMENTAL VOL (CY) (UNADJUSTED) FILL NOTE 2	CUMULATIVE VOL (CY) CUT 1.00 NOTE 1	CUMULATIVE VOL (CY) EXPANDED FILL 1.25	MASS ORDINATE NOTE 3
32+23		8	2	0	0	0	0	0
32+50	27	7	5	7	3	7	4	3
33+00	50	10	11	15	15	23	23	0
33+50	50	13	11	21	21	43	49	-5
34+00	50	0	68	12	74	56	141	-85
34+50	50	12	152	11	204	67	395	-329
35+00	50	13	26	23	165	90	601	-511
35+50	50	10	34	22	56	112	671	-559
36+00	50	8	54	17	82	128	773	-645
36+50	50	10	7	19	12	147	789	-642
			COLUMN TOTALS	147	631			

NOTES:	
1 - CUT	CUT INCLUDES SALVAGED/UNUSABLE PAVEMENT MATERIAL. SALVAGED/UNUSABLE PAVEMENT MATERIAL IS CALCULATED ON THE SUMMARY SHEET.
2 - FILL	DOES NOT INCLUDE UNUSABLE PAVEMENT EXC VOLUME. SALVAGED/UNUSABLE PAVEMENT MATERIAL IS CALCULATED ON THE SUMMARY SHEET.
3 - MASS ORDINATE	((CUT) - ((FILL) * FILL FACTOR))

DIVSION 2 - USH 14 AT CTH ZZ WB

STATION	DISTANCE	AREA (SF) CUT	AREA (SF) FILL	INCREMENTAL VOL (CY) (UNADJUSTED) CUT NOTE 1	INCREMENTAL VOL (CY) (UNADJUSTED) FILL NOTE 2	CUMULATIVE VOL (CY) CUT 1.00 NOTE 1	CUMULATIVE VOL (CY) EXPANDED FILL 1.25	MASS ORDINATE NOTE 3
163+52		10	6	0	0	0	0	0
164+00	48	5	12	13	16	13	20	-7
164+50	50	5	25	9	35	22	63	-41
165+00	50	0	38	5	58	26	136	-109
165+50	50	0	35	0	67	26	219	-193
166+00	50	15	4	14	36	40	264	-224
166+50	50	13	17	26	19	66	288	-222
167+00	50	18	10	28	25	94	319	-225
167+50	50	20	1	34	10	129	332	-203
168+00	50	27	0	43	1	172	333	-161
168+27	27	36	0	31	0	203	333	-130
			COLUMN TOTALS	203	266			

DIVSION 2 - USH 14 AT CTH ZZ - EB

STATION	DISTANCE	AREA (SF) CUT	AREA (SF) FILL	INCREMENTAL VOL (CY) (UNADJUSTED) CUT NOTE 1	INCREMENTAL VOL (CY) (UNADJUSTED) FILL NOTE 2	CUMULATIVE VOL (CY) CUT 1.00 NOTE 1	CUMULATIVE VOL (CY) EXPANDED FILL 1.25	MASS ORDINATE NOTE 3
161+86		62	1	0	0	0	0	0
162+00	14	188	1	65	0	65	0	64
162+50	50	267	0	421	1	486	1	485
163+00	50	199	0	431	0	917	2	916
163+50	50	170	0	342	0	1259	2	1257
164+00	50	50	4	203	4	1462	7	1455
164+50	50	79	13	119	16	1581	28	1554
165+00	50	14	17	86	28	1667	63	1605
165+50	50	196	0	195	16	1862	82	1780
166+00	50	63	54	240	50	2102	145	1957
166+50	50	54	11	108	61	2210	221	1989
166+81	31	54	1	62	7	2272	229	2043
			COLUMN TOTALS	2272	184			

DIVSION 3 - USH 14 206+80 - 221+10

STATION	REAL STATION	DISTANCE	AREA (SF) CUT	AREA (SF) FILL	INCREMENTAL VOL (CY) (UNADJUSTED) CUT NOTE 1	INCREMENTAL VOL (CY) (UNADJUSTED) FILL NOTE 2	CUMULATIVE VOL (CY) CUT 1.00 NOTE 1	CUMULATIVE VOL (CY) EXPANDED FILL 1.25	MASS ORDINATE NOTE 3
206+80	20680		90	64	0	0	0	0	0
207+00	20700	20	95	60	69	46	69	57	11
207+50	20750	50	157	30	233	83	302	161	141
208+00	20800	50	87	34	225	60	527	236	292
208+50	20850	50	87	48	161	76	688	331	357
209+00	20900	50	85	25	159	68	847	416	432
209+50	20950	50	77	46	150	66	998	498	499
210+00	21000	50	63	67	130	105	1127	630	497
210+50	21050	50	47	85	102	140	1229	806	424
211+00	21100	50	32	88	74	159	1303	1005	298
211+50	21150	50	23	82	51	157	1354	1201	153
212+00	21200	50	13	71	33	141	1387	1378	10
212+50	21250	50	9	70	20	131	1407	1541	-133
213+00	21300	50	12	67	19	127	1427	1700	-273
213+50	21350	50	6	116	16	169	1443	1911	-468
214+00	21400	50	8	199	13	291	1456	2275	-819
214+50	21450	50	100	0	100	184	1556	2506	-949
215+00	21500	50	33	114	123	106	1679	2638	-959
215+50	21550	50	24	76	52	176	1731	2858	-1127
216+00	21600	100	37	45	115	290	1794	3001	-1207
216+50	21650	50	48	26	78	65	1872	3083	-1210
217+00	21700	50	63	13	102	36	1975	3127	-1153
217+50	21750	50	80	3	132	14	2107	3145	-1038
218+00	21800	50	84	0	152	3	2258	3149	-890
218+50	21850	50	94	1	165	1	2423	3150	-727
219+00	21900	50	101	4	181	4	2604	3155	-551
219+50	21950	50	95	8	182	11	2786	3169	-383
220+00	22000	50	102	11	183	18	2969	3191	-222
220+50	22050	50	117	5	203	15	3172	3210	-38
221+00	22100	50	116	6	216	10	3388	3222	166
221+10	22110	10	116	6	43	2	3431	3225	206
				COLUMN TOTALS	3483	2756			

DIVSION 4 - ROCK CUT

STATION	DISTANCE	AREA (SF) CUT	AREA (SF) FILL	INCREMENTAL VOL (CY) (UNADJUSTED) Rock Exc	INCREMENTAL VOL (CY) (UNADJUSTED) CUT NOTE 1	INCREMENTAL VOL (CY) (UNADJUSTED) FILL NOTE 2	CUMULATIVE VOL (CY) Rock Exc	CUMULATIVE VOL (CY) CUT 1.00 NOTE 1	CUMULATIVE VOL (CY) EXPANDED FILL 1.25	CUMULATIVE VOL (CY) Expanded Rock 1.10	MASS ORDINATE NOTE 3
179+50		131	21	131	0	0	0	0	0	0	0
180+00	50	162	20	162	271	38	271	271	-324	298	595
180+50	50	265	21	265	396	38	396	666	-821	733	1487
181+00	50	308	29	308	531	45	531	1197	-1494	1317	2691
181+50	50	344	30	344	603	54	603	1800	-2255	1980	4055
182+00	50	341	31	341	633	57	633	2434	-3055	2677	5489
182+50	50	254	35	254	551	61	551	2984	-3736	3283	6720
183+00	50	271	16	271	486	47	486	3470	-4345	3817	7815
183+50	50	184	26	184	421	39	421	3891	-4875	4280	8766
184+00	50	158	53	158	317	74	317	4208	-5218	4629	9426
184+50	50	73	120	73	214	160	214	4422	-5312	4864	9734
185+00	50	35	157	35	100	256	100	4522	-5129	4974	9652
185+50	50	26	169	26	57	301	57	4579	-4831	5037	9410
186+00	50	35	38	35	57	192	57	4636	-4669	5099	9305
186+50	50	93	110	93	119	137	119	4754	-4661	5230	9415
186+75	25	82	35	82	81	67	81	4835	-4688	5319	9523
				COLUMN TOTALS	4835	1569	4835				

DIVSION 5 - USH 14 AT COVERED BRIDGE

STATION	REAL STATION	DISTANCE	AREA (SF) CUT	AREA (SF) FILL	INCREMENTAL VOL (CY) (UNADJUSTED) CUT NOTE 1	INCREMENTAL VOL (CY) (UNADJUSTED) FILL NOTE 2	CUMULATIVE VOL (CY) CUT 1.00 NOTE 1	CUMULATIVE VOL (CY) EXPANDED FILL 1.25	MASS ORDINATE NOTE 3
309+66	30966		5	17	0	0	0	0	0
310+00	31000	34	5	15	6	20	6	25	-19
310+50	31050	50	6	18	10	30	17	63	-46
311+00	31100	50	0	41	6	54	23	131	-108
311+50	31150	50	3	13	3	50	26	193	-167
312+00	31200	50	10	10	12	21	38	220	-182
312+50	31250	50	13	6	22	15	59	239	-179
313+00	31300	50	16	5	27	10	86	251	-165
313+50	31350	50	16	7	29	11	116	265	-149
314+00	31400	50	15	6	29	12	144	280	-136
314+40	31440	40	8	5	17	8	161	290	-128
				COLUMN TOTALS	161	232			

.

DIVSION 6 - CTH Z

STATION	DISTANCE	AREA (SF) CUT	AREA (SF) FILL	INCREMENTAL VOL (CY) (UNADJUSTED) CUT NOTE 1	INCREMENTAL VOL (CY) (UNADJUSTED) FILL NOTE 2	CUMULATIVE VOL (CY) CUT 1.00 NOTE 1	CUMULATIVE VOL (CY) EXPANDED FILL 1.25	MASS ORDINATE NOTE 3
120+50		14	80	0	0	0	0	0
121+00	50	0	86	13	154	13	192	-180
121+50	50	4	27	4	119	17	341	-325
122+00	50	35	1	37	89	53	453	-400
122+20	20	43	0	29	0	82	453	-371
			COLUMN TOTALS	82	363			

DIVSION 7 - TUCK-A-WAY

STATION	DISTANCE	AREA (SF) CUT	AREA (SF) FILL	INCREMENTAL VOL (CY) (UNADJUSTED) CUT NOTE 1	INCREMENTAL VOL (CY) (UNADJUSTED) FILL NOTE 2	CUMULATIVE VOL (CY) CUT 1.00 NOTE 1	CUMULATIVE VOL (CY) EXPANDED FILL 1.25	MASS ORDINATE NOTE 3
210+00		43	0	0	0	0	0	0
210+50	50	93	1	126	1	126	2	124
211+00	50	161	0	235	1	360	3	357
211+10	10	154	5	58	1	419	4	414
212+45		8	12	0	0	419	4	414
212+50	5	13	4	2	1	421	6	415
213+00	50	53	8	61	11	482	20	462
213+47	47	44	0	84	7	566	29	537
			COLUMN TOTALS	566	23			

DIVSION 8 - TUCK-A-WAY

STATION	DISTANCE	AREA (SF) CUT	AREA (SF) FILL	INCREMENTAL VOL (CY) (UNADJUSTED) CUT NOTE 1	INCREMENTAL VOL (CY) (UNADJUSTED) FILL NOTE 2	CUMULATIVE VOL (CY) CUT 1.00 NOTE 1	CUMULATIVE VOL (CY) EXPANDED FILL 1.25	MASS ORDINATE NOTE 3
220+55		13	43	0	0	0	0	0
221+00	45	56	26	57	57	57	71	-14
221+50	50	45	81	93	99	151	196	-45
221+60	10	50	72	18	28	168	231	-63
222+70		15	13	0	0	168	231	-63
223+00	30	14	148	16	89	185	343	-158
223+50	50	28	28	39	163	223	546	-323
223+79	29	34	3	33	17	256	567	-311
			COLUMN TOTALS	256	454			

DIVSION 9 - BUCKHORN DRIVE

STATION	DISTANCE	AREA (SF) CUT	AREA (SF) FILL	INCREMENTAL VOL (CY) (UNADJUSTED) CUT NOTE 1	INCREMENTAL VOL (CY) (UNADJUSTED) FILL NOTE 2	CUMULATIVE VOL (CY) CUT 1.00 NOTE 1	CUMULATIVE VOL (CY) EXPANDED FILL 1.25	MASS ORDINATE NOTE 3
310+50		29	6	0	0	0	0	0
311+00	50	17	1	42	6	42	8	34
311+50	50	35	0	48	0	91	1	90
311+60	10	37	0	13	0	104	0	104
			COLUMN TOTALS	104	6			

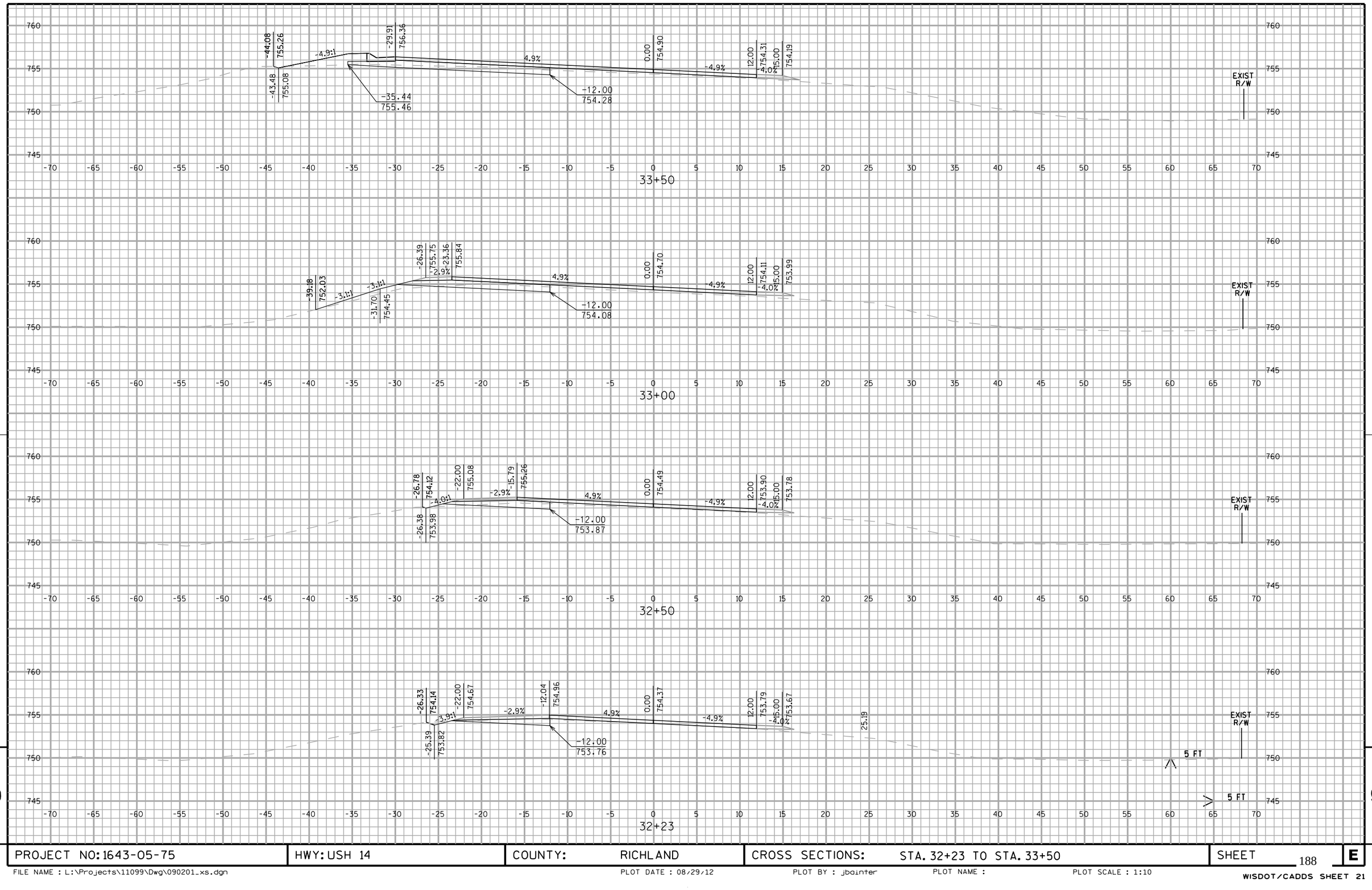

PROJECT NO: 1643-05-75	HWY: USH 14	COUNTY: RICHLAND	CROSS SECTIONS: STA. 32+23 TO STA. 33+50	SHEET 188 E

FILE NAME : L:\Projects\11099\Dwg\090201_xs.dgn | PLOT DATE : 08/29/12 | PLOT BY : jbainter | PLOT NAME : | PLOT SCALE : 1:10

WISDOT/CADDS SHEET 21

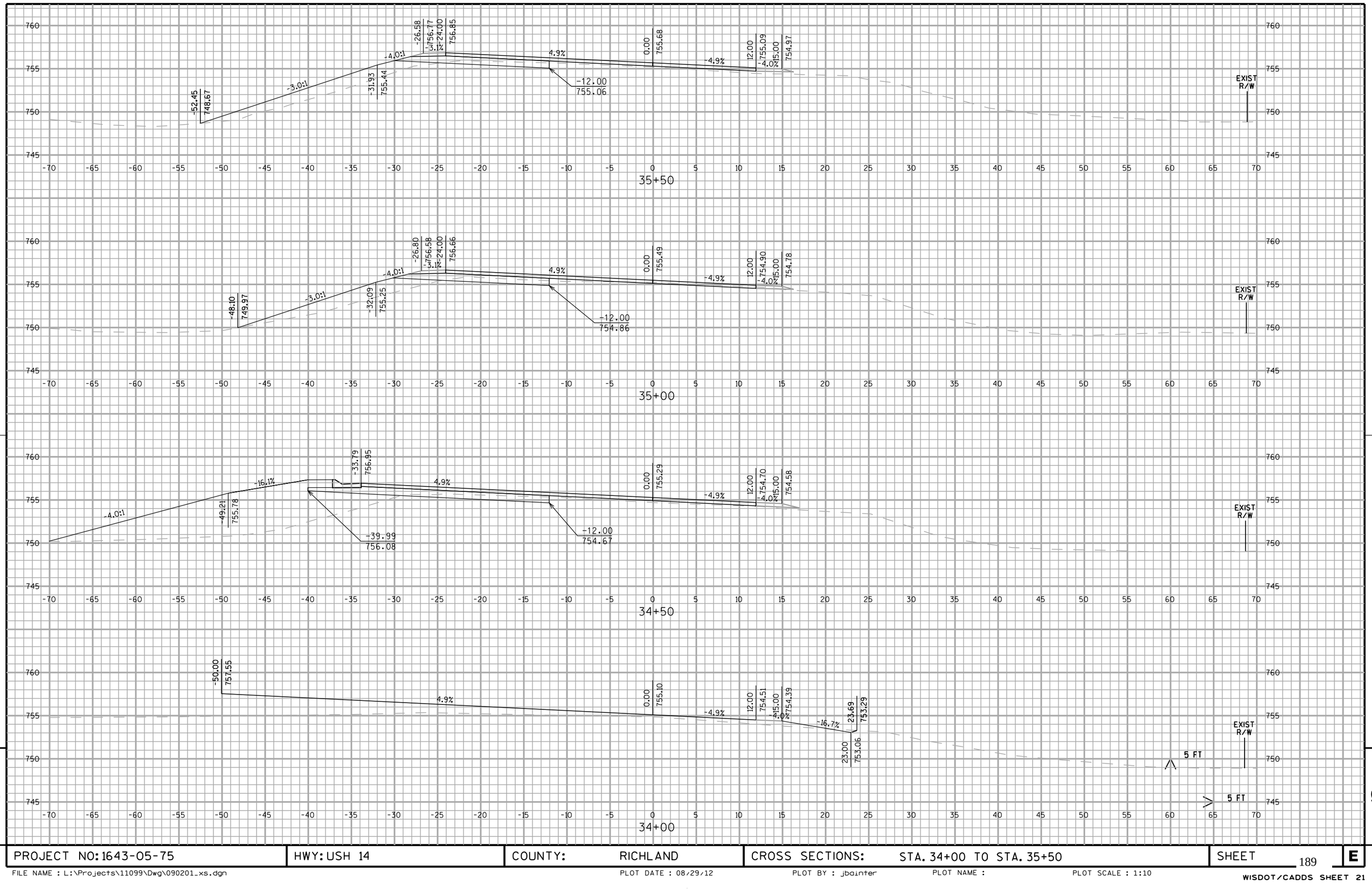

PROJECT NO: 1643-05-75	HWY: USH 14	COUNTY: RICHLAND	CROSS SECTIONS: STA. 34+00 TO STA. 35+50	SHEET 189 E

FILE NAME : L:\Projects\11099\Dwg\090201_xs.dgn | PLOT DATE : 08/29/12 | PLOT BY : jbainter | PLOT NAME : | PLOT SCALE : 1:10

WISDOT/CADDS SHEET 21

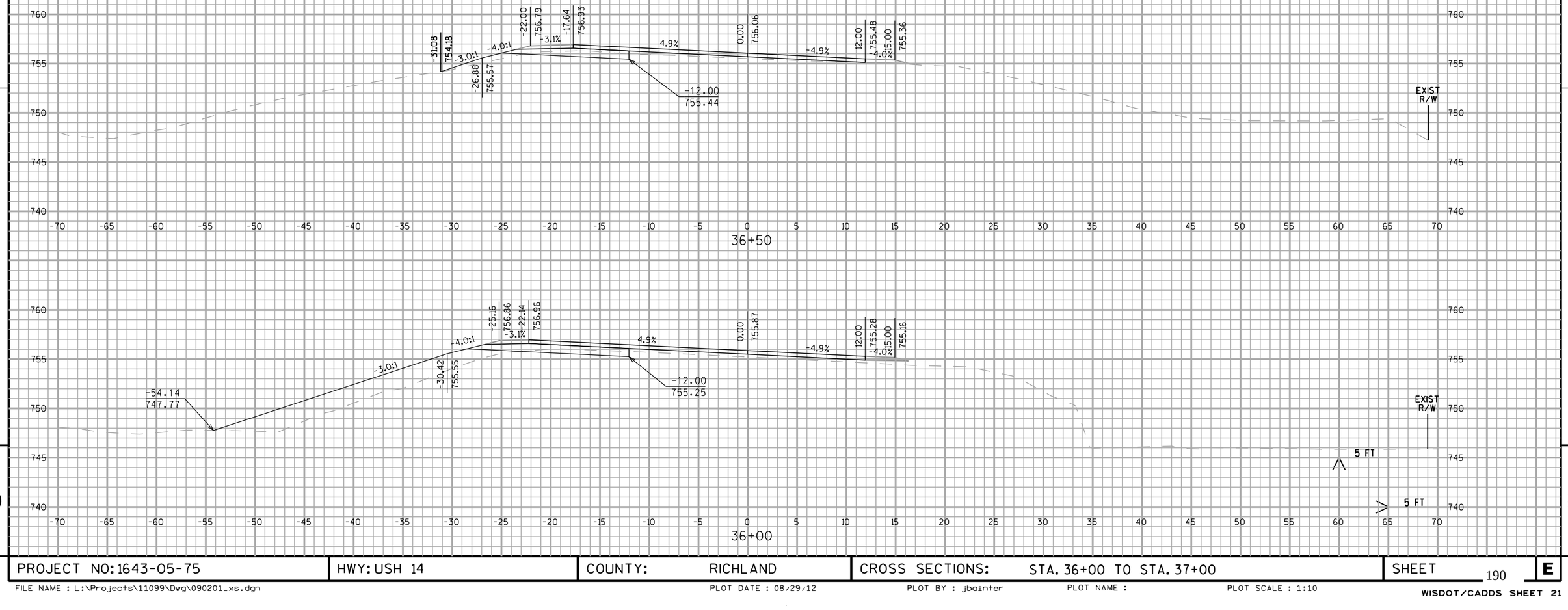

9

9

PROJECT NO: 1643-05-75	HWY: USH 14	COUNTY: RICHLAND	CROSS SECTIONS: STA. 36+00 TO STA. 37+00	SHEET 190 E

FILE NAME : L:\Projects\11099\Dwg\090201_xs.dgn PLOT DATE : 08/29/12 PLOT BY : jbainter PLOT NAME : PLOT SCALE : 1:10

WISDOT/CADDS SHEET 21

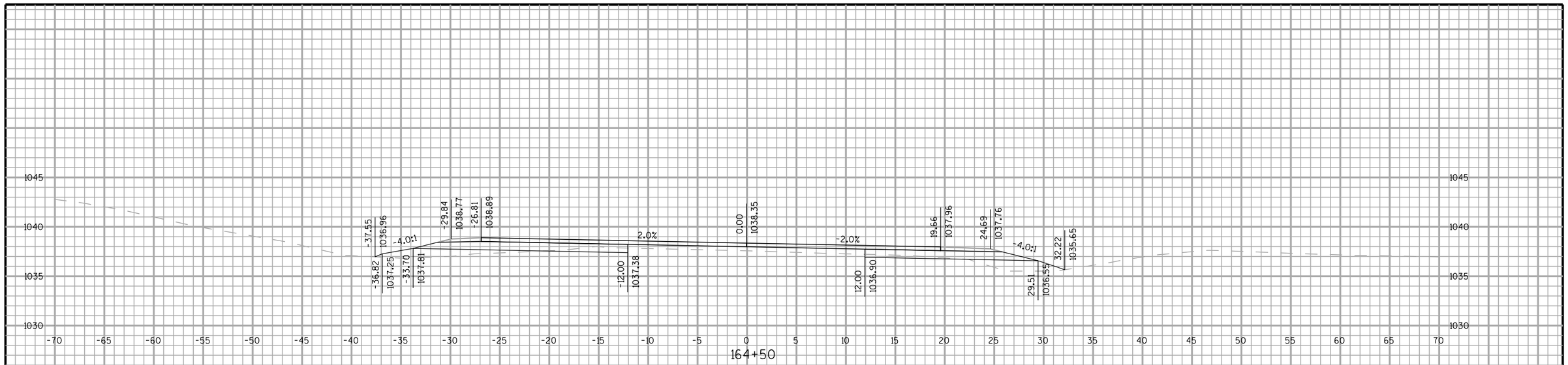

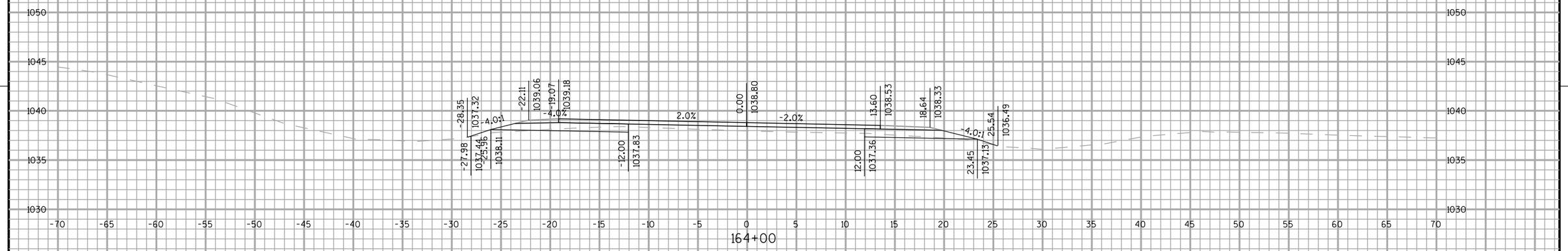

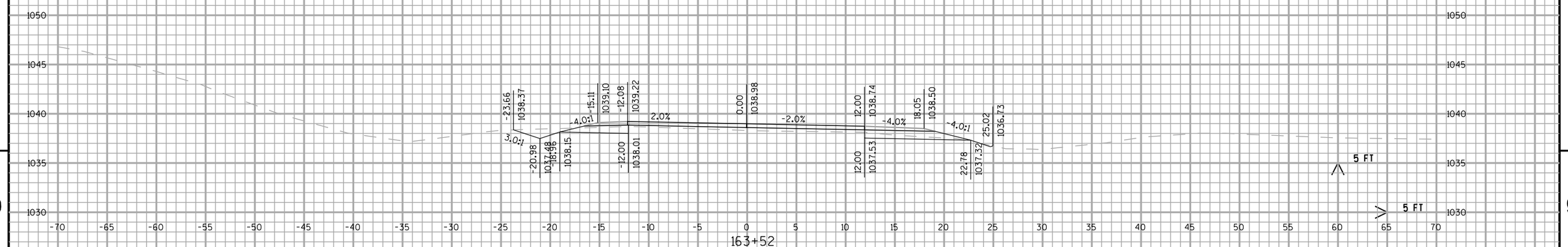

PROJECT NO: 1643-05-75	HWY: USH 14	COUNTY:	RICHLAND	CROSS SECTIONS: STA. 163+52 TO STA. 164+50	SHEET 191 E

FILE NAME : L:\Projects\11099\Dwg\090201_xs.dgn | PLOT DATE : 08/29/12 | PLOT BY : jbainter | PLOT NAME : | PLOT SCALE : 1:10

WISDOT/CADDS SHEET 21

9

9

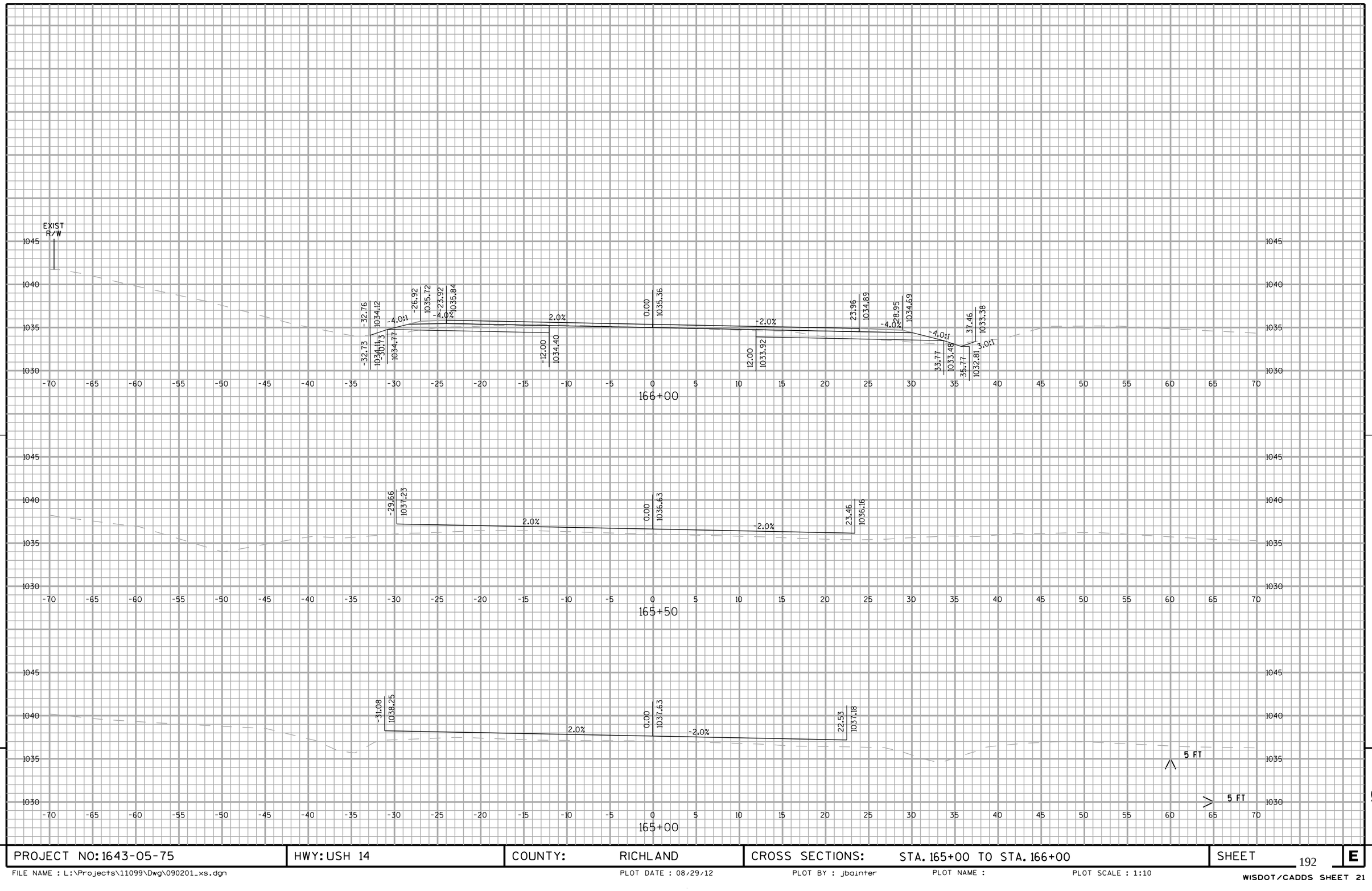

PROJECT NO: 1643-05-75	HWY: USH 14	COUNTY: RICHLAND	CROSS SECTIONS: STA. 165+00 TO STA. 166+00	SHEET 192 E

FILE NAME : L:\Projects\11099\Dwg\090201_xs.dgn PLOT DATE : 08/29/12 PLOT BY : jbainter PLOT NAME : PLOT SCALE : 1:10

WISDOT/CADDS SHEET 21

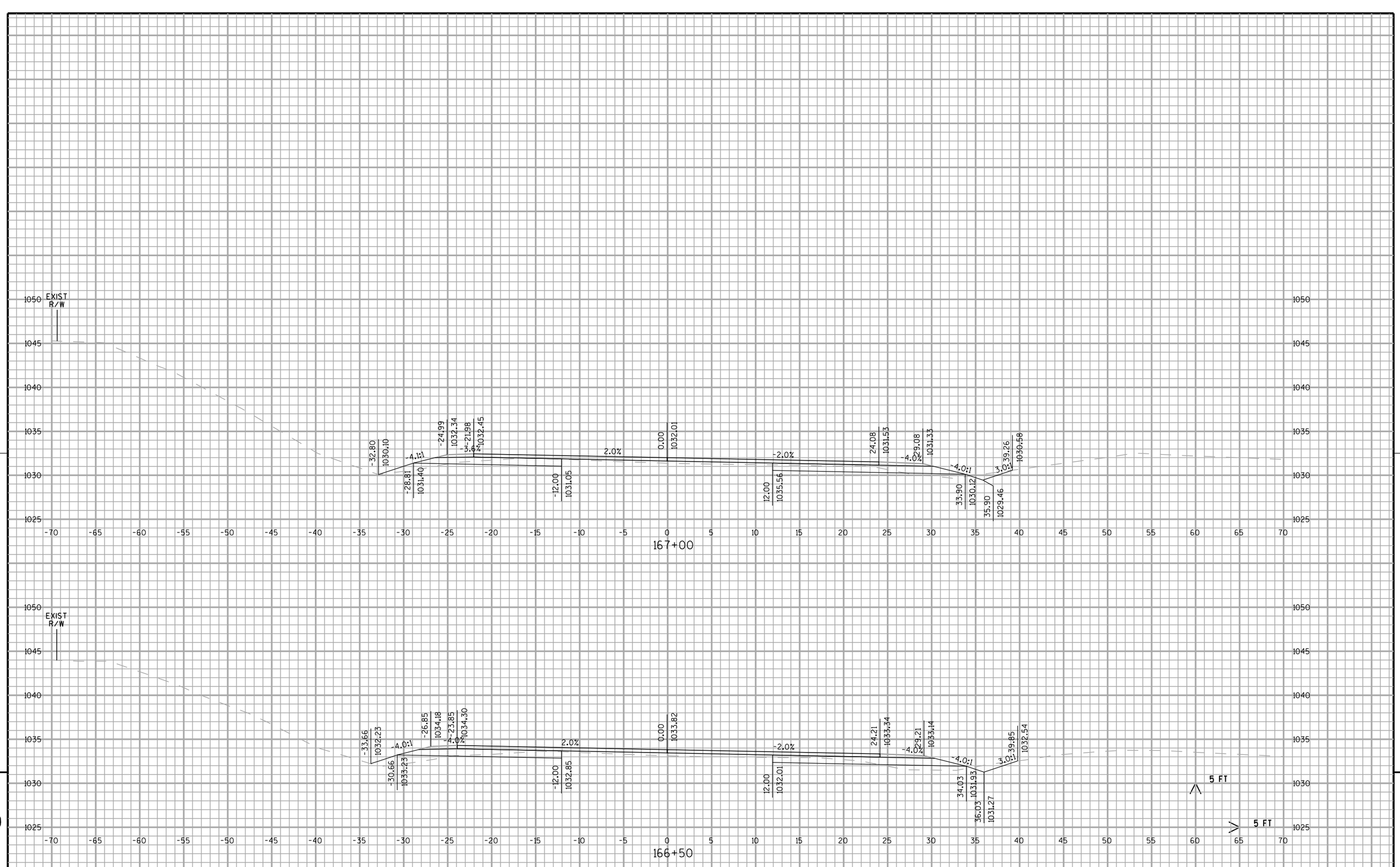

9

9

PROJECT NO: 1643-05-75	HWY: USH 14	COUNTY: RICHLAND	CROSS SECTIONS: STA. 166+50 TO STA. 167+00	SHEET 193 E

FILE NAME : L:\Projects\11099\Dwg\090201_xs.dgn PLOT DATE : 08/29/12 PLOT BY : jbainter PLOT NAME : PLOT SCALE : 1:10

WISDOT/CADDS SHEET 21

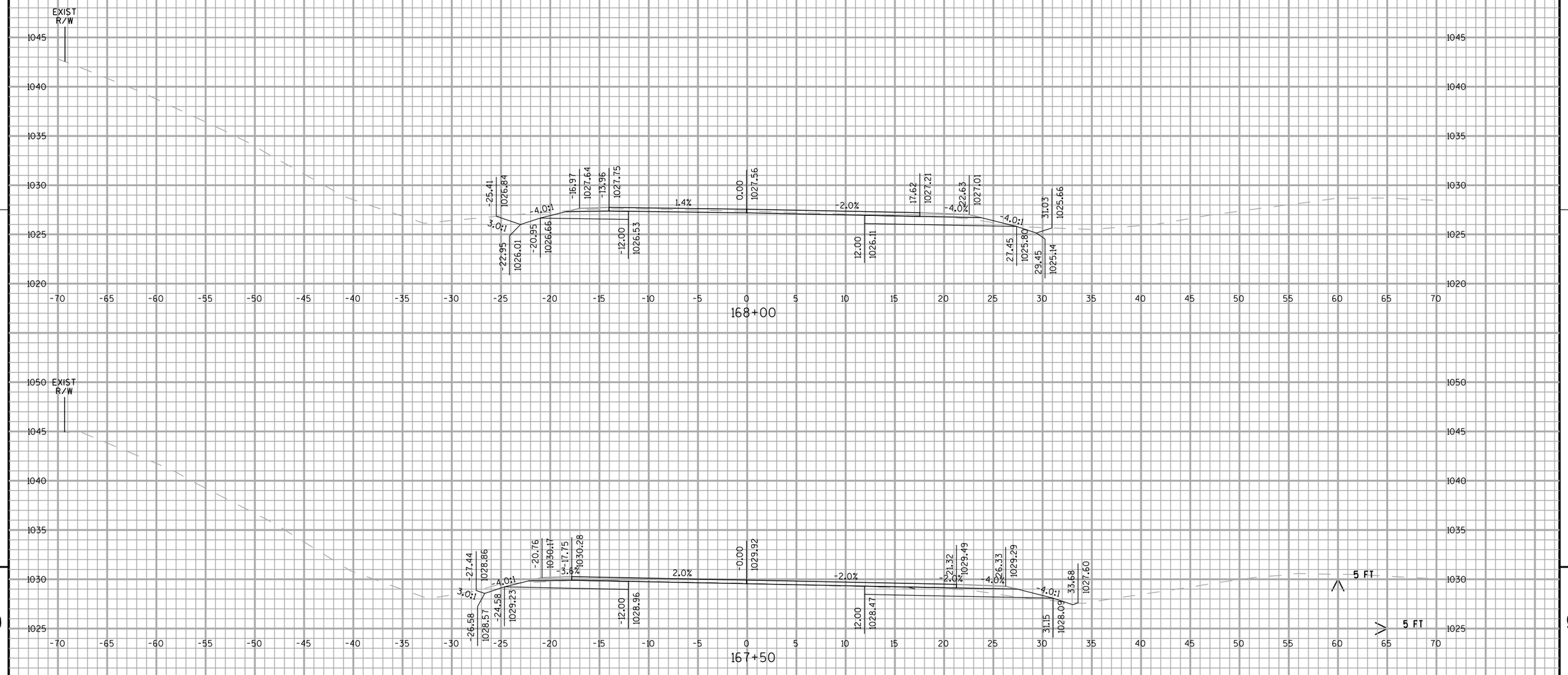

9

9

PROJECT NO: 1643-05-75	HWY: USH 14	COUNTY: RICHLAND	CROSS SECTIONS: STA. 167+50 TO STA. 168+00	SHEET 194 E

FILE NAME : L:\Projects\11099\Dwg\090201_xs.dgn PLOT DATE : 08/29/12 PLOT BY : jbainter PLOT NAME : PLOT SCALE : 1:10

WISDOT/CADDS SHEET 21

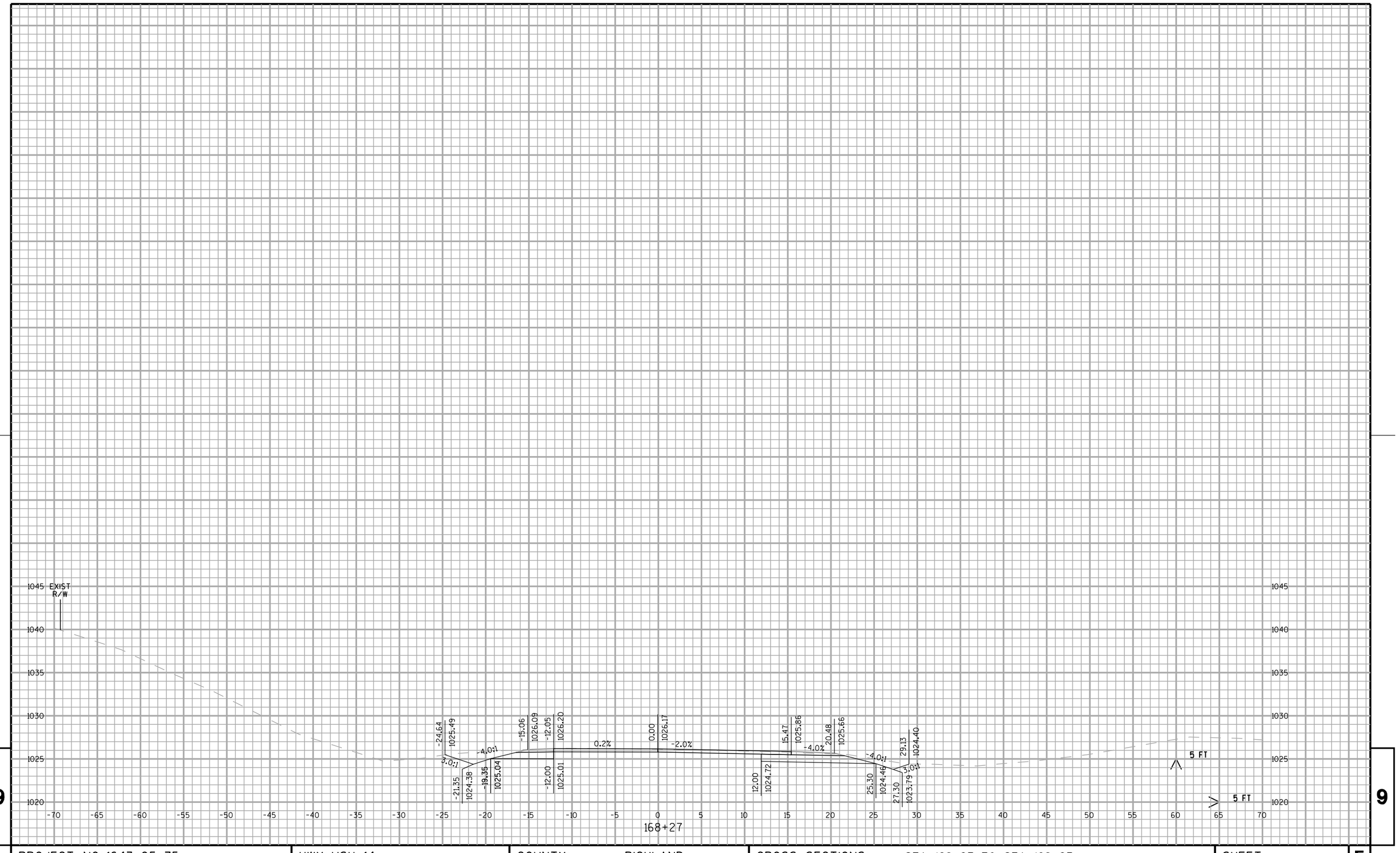

9

9

PROJECT NO: 1643-05-75	HWY: USH 14	COUNTY: RICHLAND	CROSS SECTIONS: STA. 168+27 TO STA. 168+27	SHEET E

FILE NAME : L:\Projects\11099\Dwg\090201_xs.dgn PLOT DATE : 08/29/12 PLOT BY : jbainter PLOT NAME : PLOT SCALE : 1:10

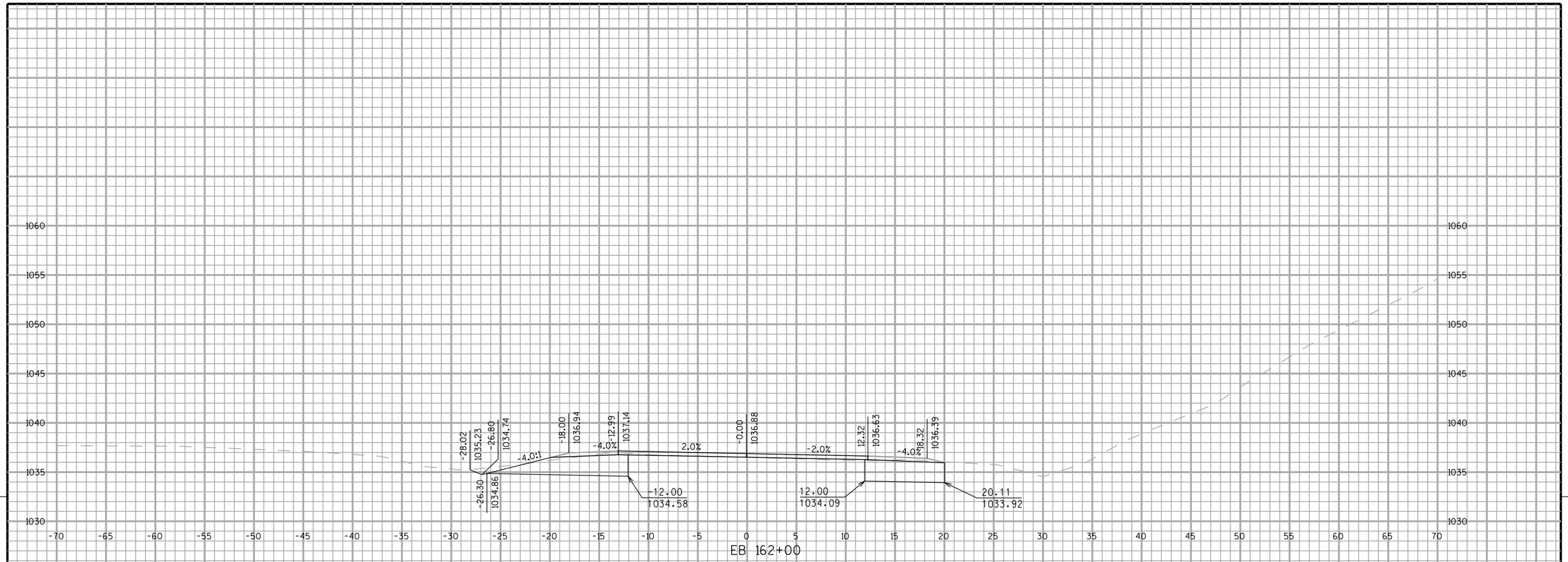

PROJECT NO: 1643-05-75	HWY: USH 14	COUNTY: RICHLAND	CROSS SECTIONS: STA. EB 161+86 TO STA. EB 162+00	SHEET 196	E

FILE NAME : L:\Projects\11099\Dwg\090201_xs.dgn PLOT DATE : 08/29/12 PLOT BY : jbainter PLOT NAME : PLOT SCALE : 1:10

WISDOT/CADDS SHEET 21

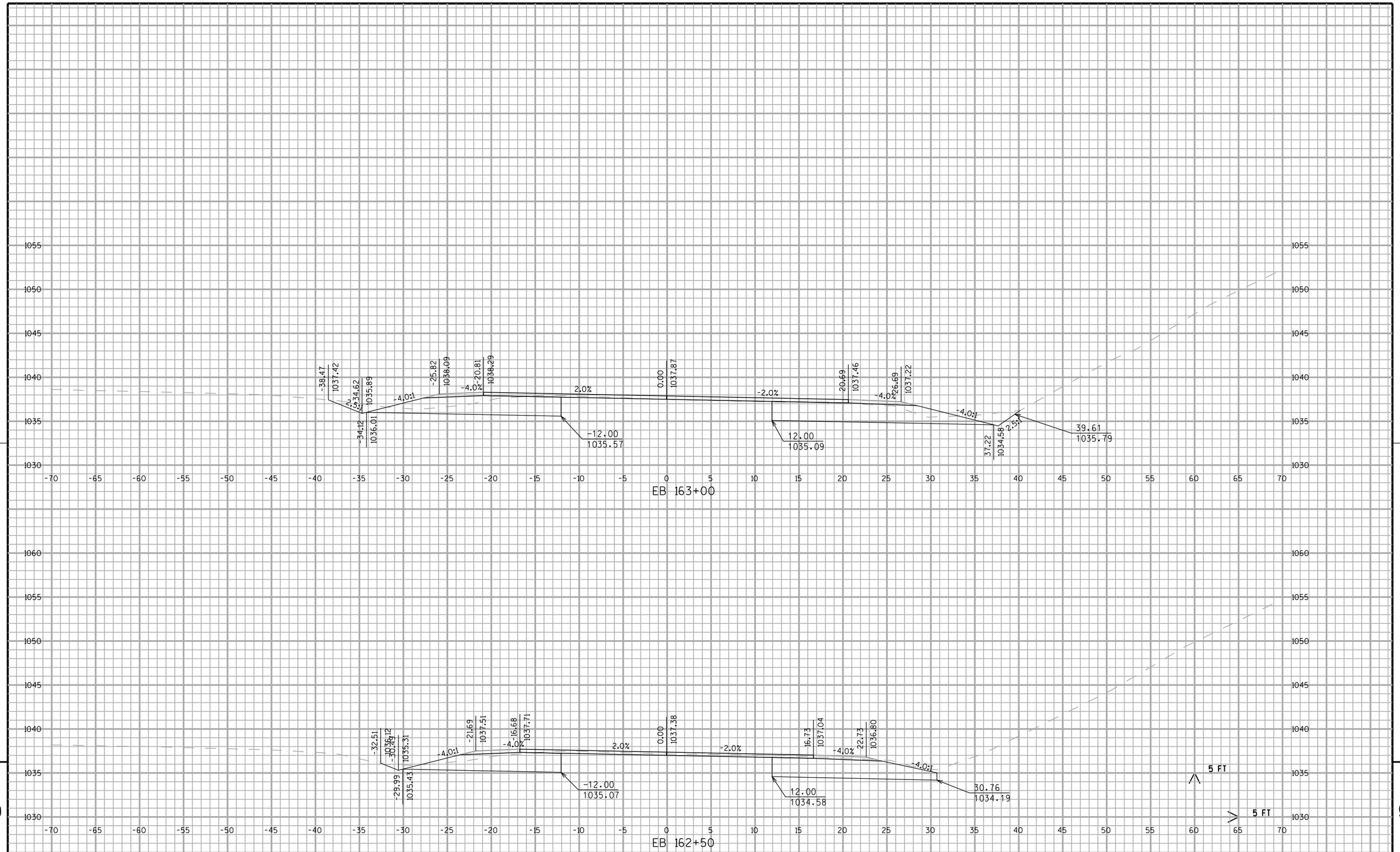

PROJECT NO: 1643-05-75	HWY: USH 14	COUNTY: RICHLAND	CROSS SECTIONS: STA. EB 162+50 TO STA. EB 163+00	SHEET 197	E

FILE NAME : L:\Projects\11099\Dwg\090201_xs.dgn PLOT DATE : 08/29/12 PLOT BY : jbainter PLOT NAME : PLOT SCALE : 1:10

WISDOT/CADDS SHEET 21

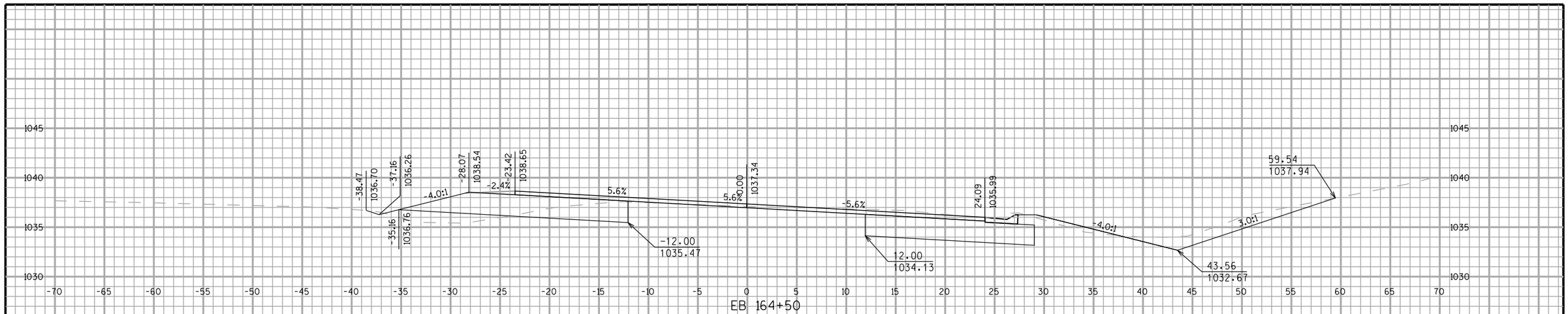

EB 164+50

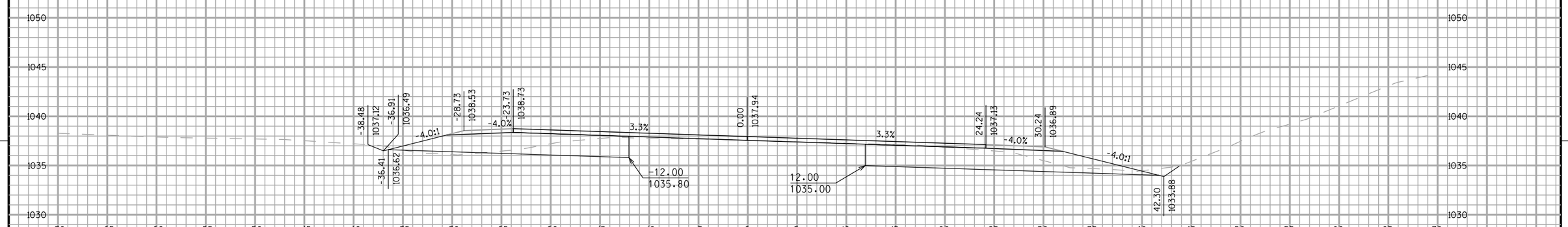

EB 164+00

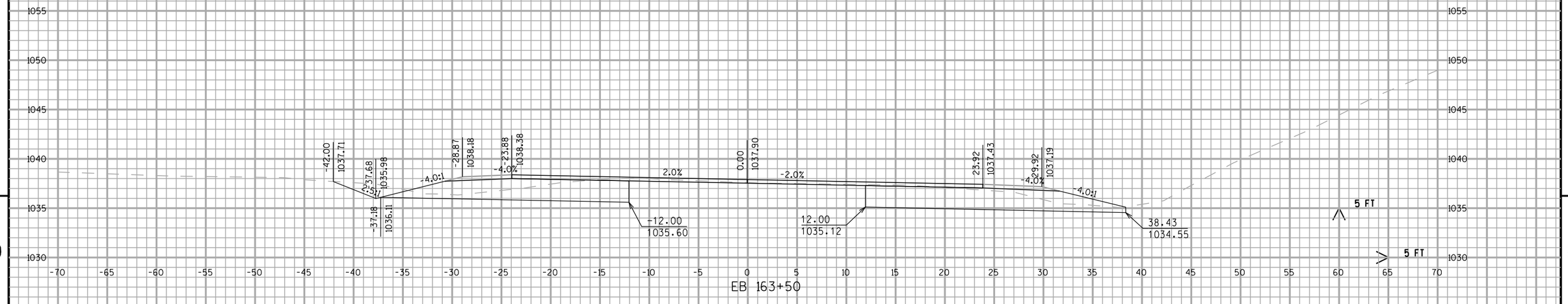

EB 163+50

9

9

PROJECT NO: 1643-05-75	HWY: USH 14	COUNTY: RICHLAND	CROSS SECTIONS: STA. EB 163+50 TO STA. EB 164+50	SHEET 198	E

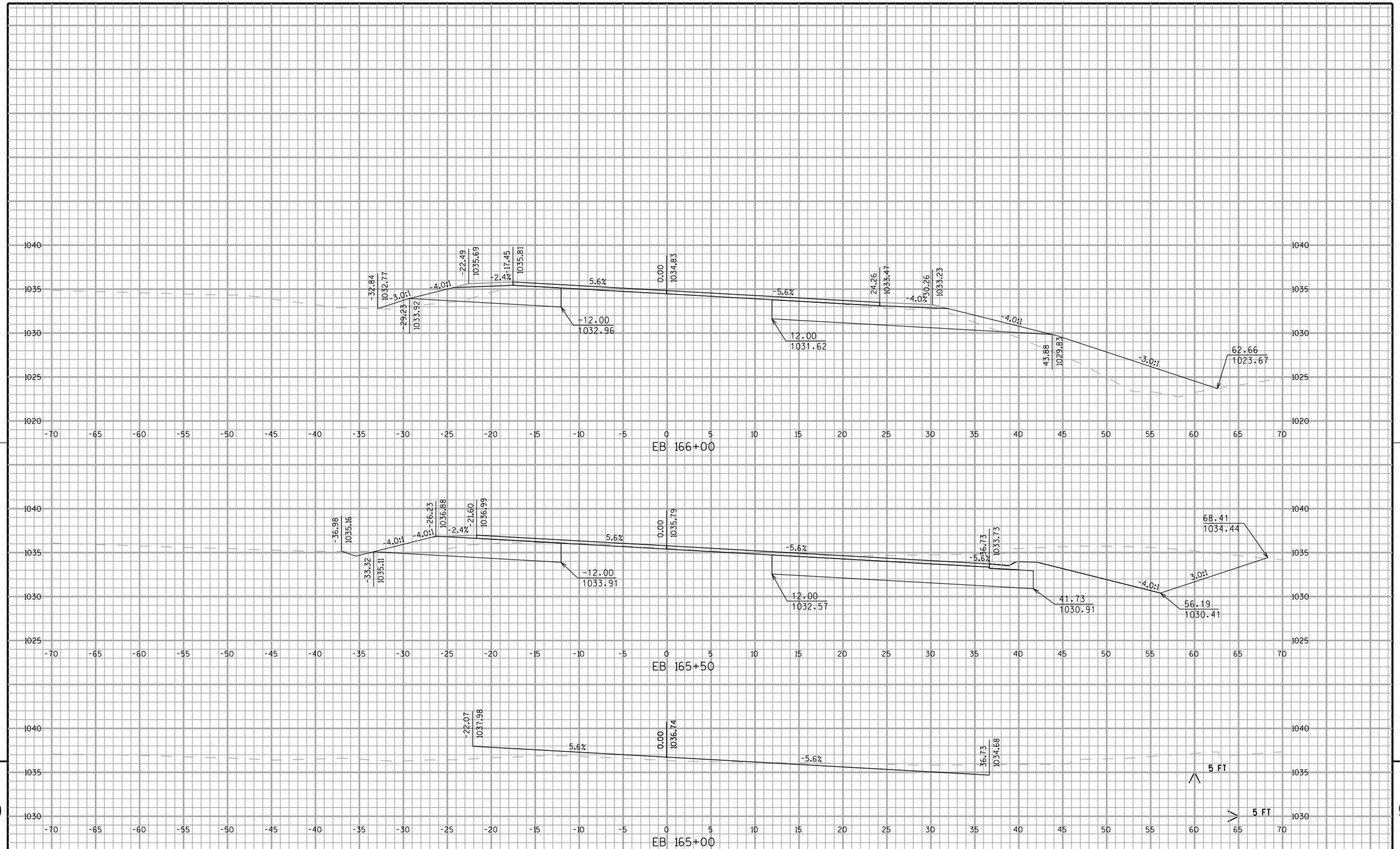

PROJECT NO: 1643-05-75	HWY: USH 14	COUNTY: RICHLAND	CROSS SECTIONS: STA. EB 165+00 TO STA. EB 166+00	SHEET E

FILE NAME : L:\Projects\11099\Dwg\090201_xs.dgn PLOT DATE : 08/29/12 PLOT BY : jbainter PLOT NAME : PLOT SCALE : 1:10

WISDOT/CADDS SHEET 21

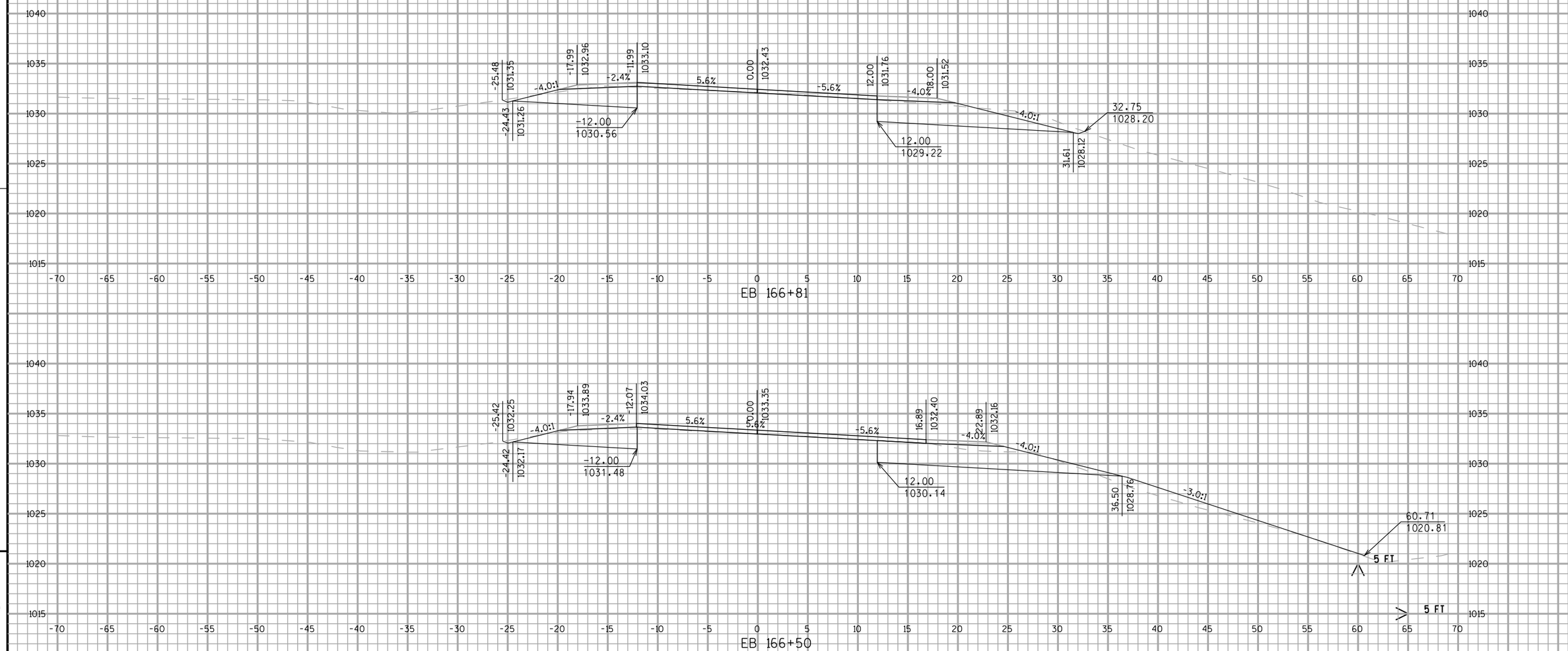

PROJECT NO: 1643-05-75	HWY: USH 14	COUNTY: RICHLAND	CROSS SECTIONS: STA. EB 166+50 TO STA. EB 166+81	SHEET 200 E

FILE NAME : L:\Projects\11099\Dwg\090201_xs.dgn PLOT DATE : 08/29/12 PLOT BY : jbainter PLOT NAME : PLOT SCALE : 1:10

WISDOT/CADDS SHEET 21

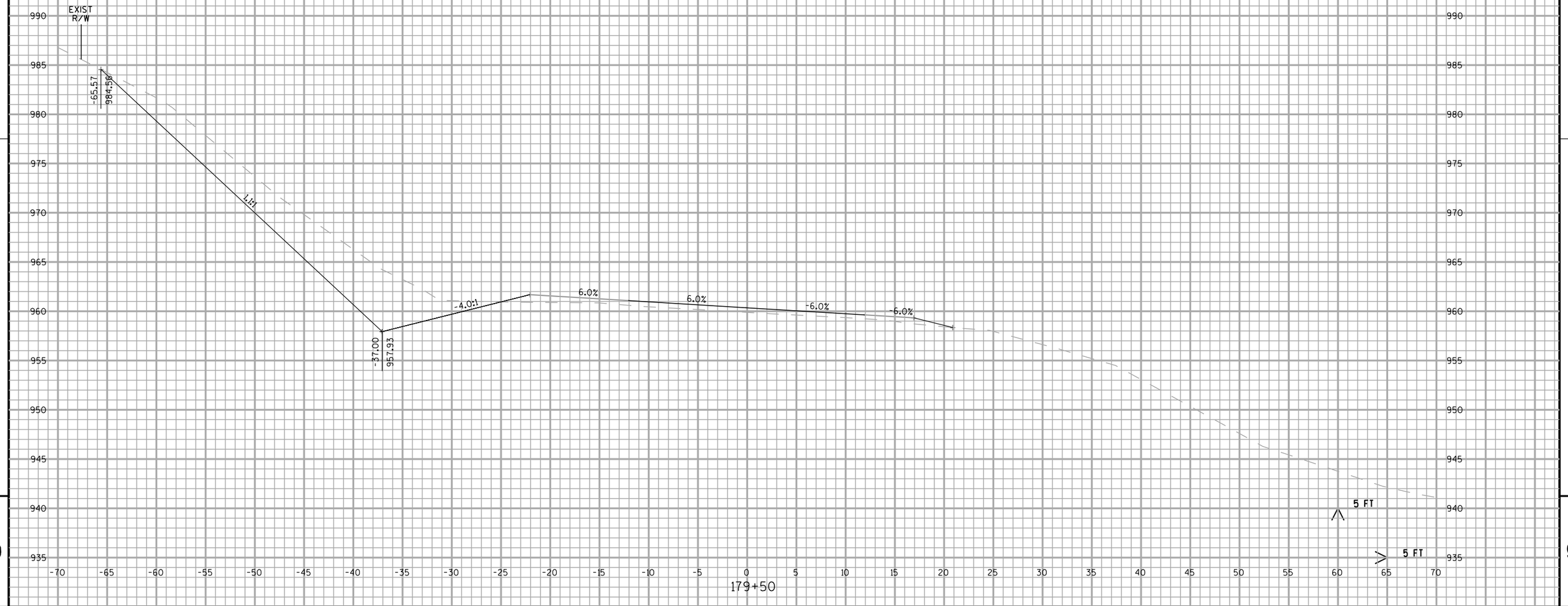

PROJECT NO: 1643-05-75	HWY: USH 14	COUNTY: RICHLAND	CROSS SECTIONS: STA. 179+50 TO STA. 179+50	SHEET 201 E

FILE NAME : L:\Projects\11099\Dwg\090201_xs.dgn PLOT DATE : 08/29/12 PLOT BY : jbainter PLOT NAME : PLOT SCALE : 1:10

WISDOT/CADDS SHEET 21

9

9

PROJECT NO: 1643-05-75	HWY: USH 14	COUNTY: RICHLAND	CROSS SECTIONS: STA. 180+00 TO STA. 180+00	SHEET E

FILE NAME : L:\Projects\11099\Dwg\090201_xs.dgn PLOT DATE : 08/29/12 PLOT BY : jbainter PLOT NAME : PLOT SCALE : 1:10

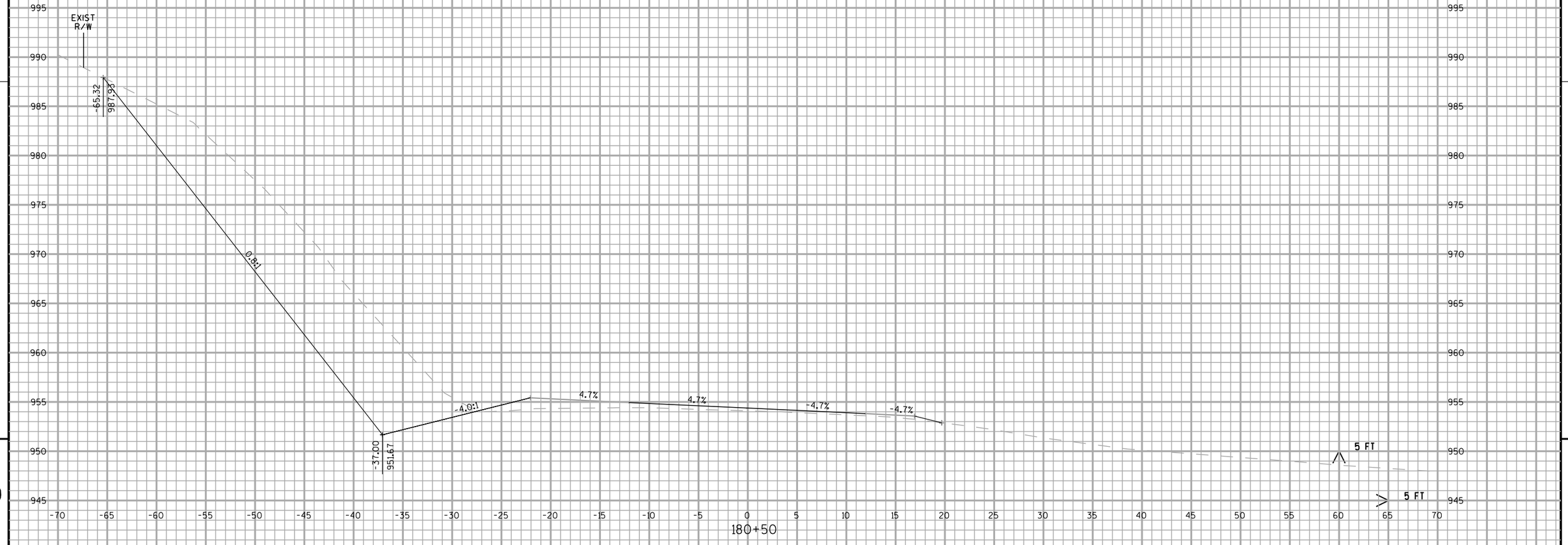

PROJECT NO: 1643-05-75	HWY: USH 14	COUNTY: RICHLAND	CROSS SECTIONS: STA. 180+50 TO STA. 180+50	SHEET 203 E

FILE NAME : L:\Projects\11099\Dwg\090201_xs.dgn PLOT DATE : 08/29/12 PLOT BY : jbainter PLOT NAME : PLOT SCALE : 1:10

WISDOT/CADDS SHEET 21

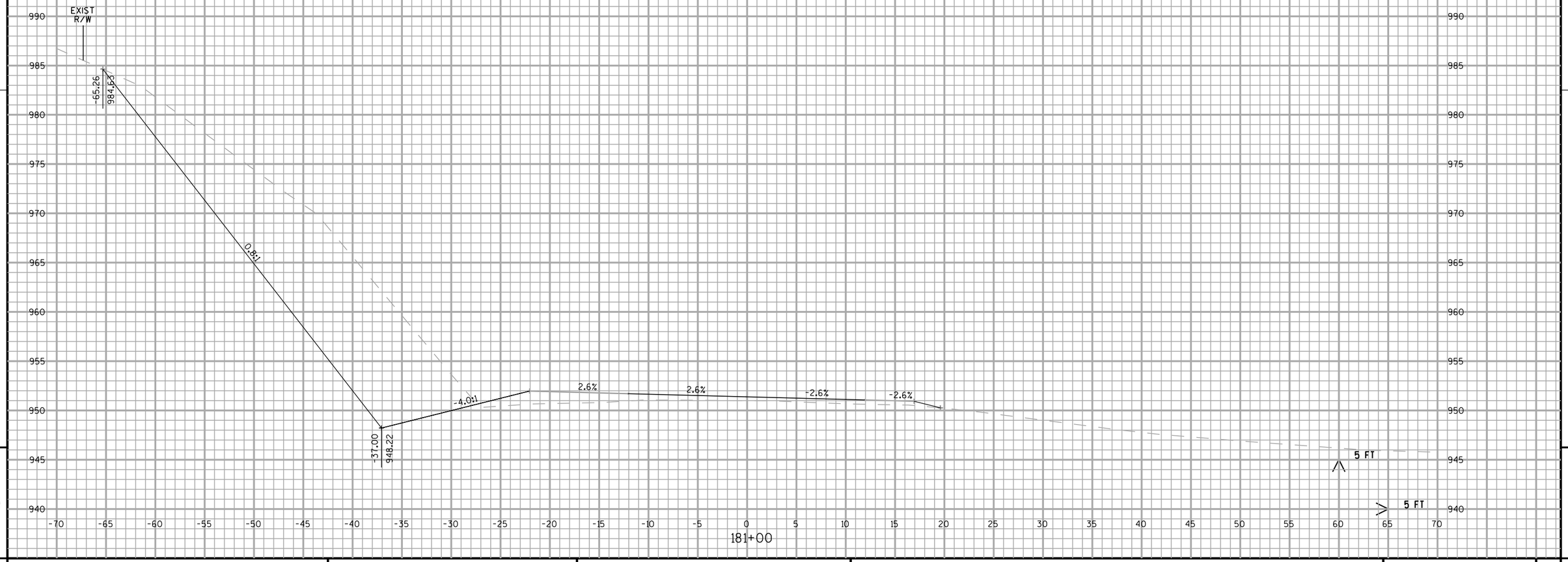

9

9

PROJECT NO: 1643-05-75	HWY: USH 14	COUNTY: RICHLAND	CROSS SECTIONS: STA. 181+00 TO STA. 181+00	SHEET 204 E

FILE NAME : L:\Projects\11099\Dwg\090201_xs.dgn PLOT DATE : 08/29/12 PLOT BY : jbainter PLOT NAME : PLOT SCALE : 1:10

WISDOT/CADDS SHEET 21

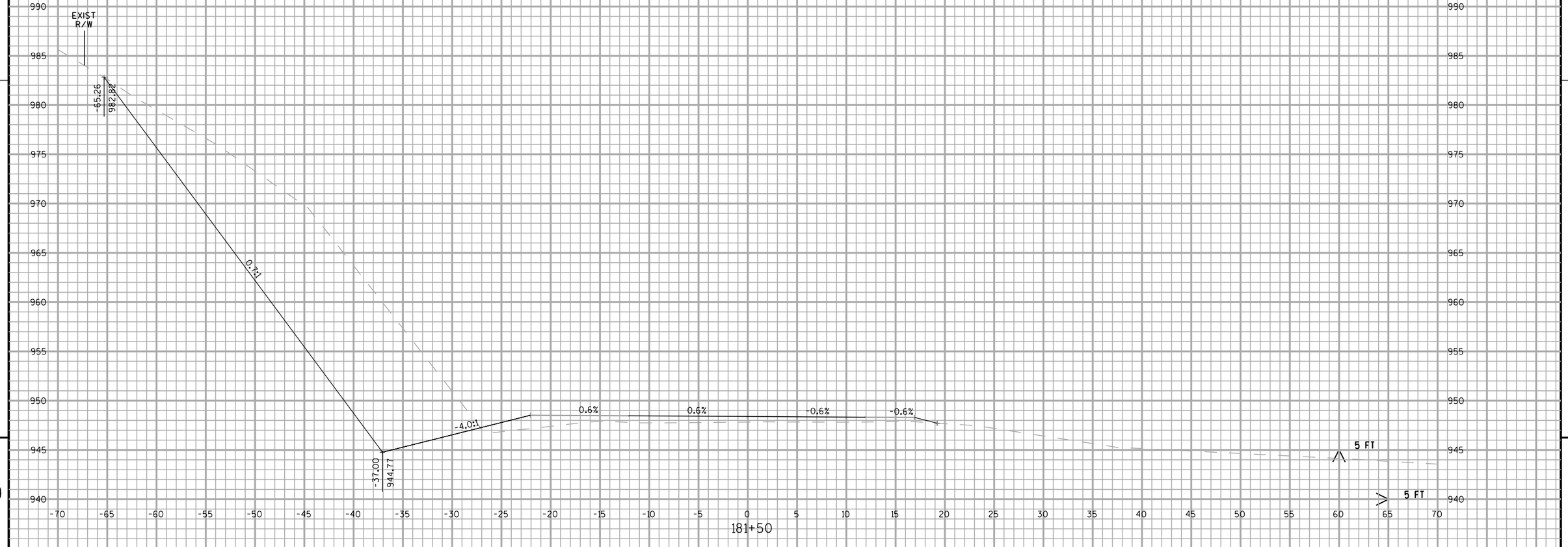

PROJECT NO: 1643-05-75	HWY: USH 14	COUNTY: RICHLAND	CROSS SECTIONS: STA. 181+50 TO STA. 181+50	SHEET E

9 9

FILE NAME : L:\Projects\11099\Dwg\090201_xs.dgn PLOT DATE : 08/29/12 PLOT BY : jbainter PLOT NAME : PLOT SCALE : 1:10

WISDOT/CADDS SHEET 21

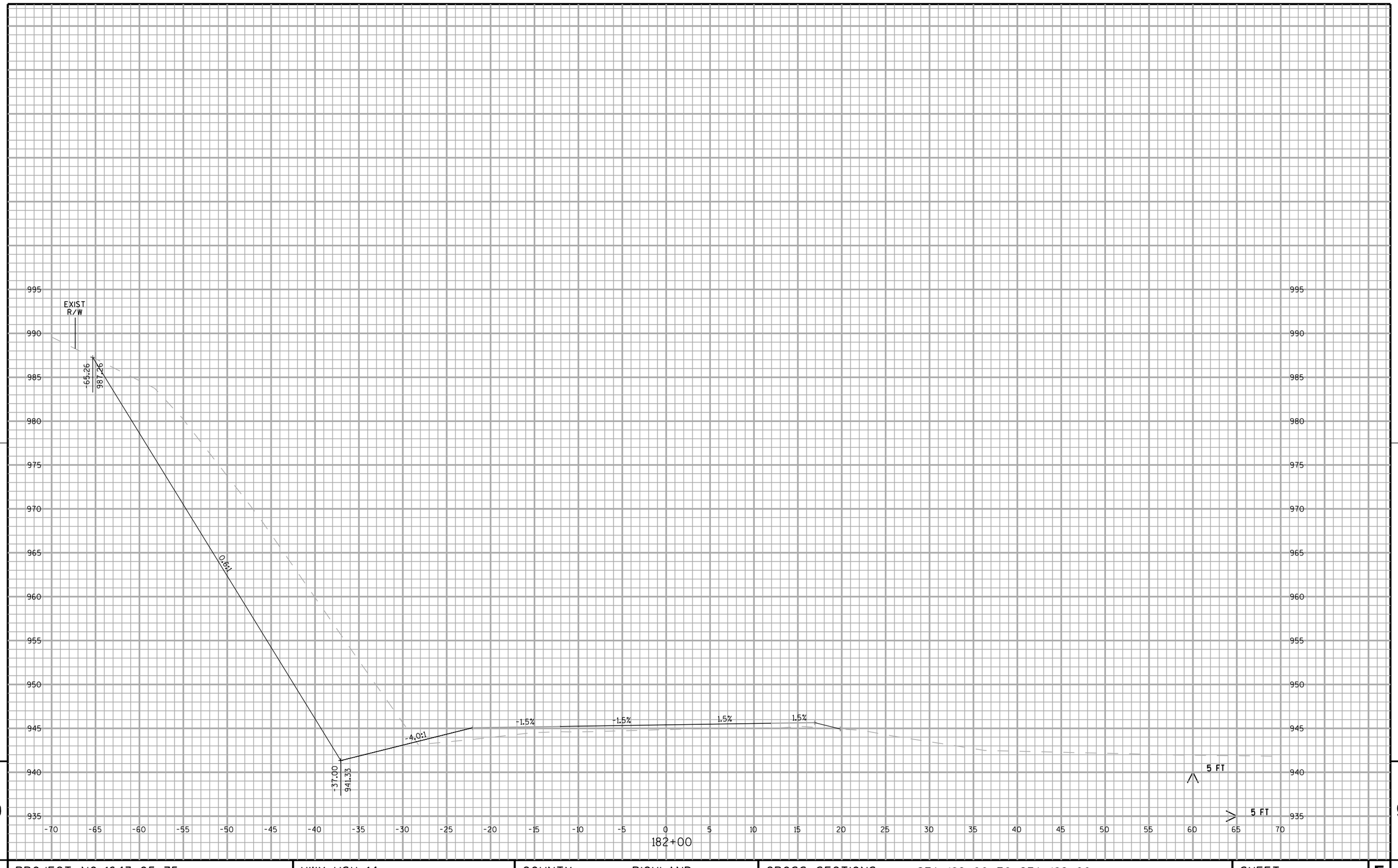

9

9

PROJECT NO: 1643-05-75	HWY: USH 14	COUNTY: RICHLAND	CROSS SECTIONS: STA. 182+00 TO STA. 182+00	SHEET E

FILE NAME : L:\Projects\11099\Dwg\090201_xs.dgn PLOT DATE : 08/29/12 PLOT BY : jbainter PLOT NAME : PLOT SCALE : 1:10

WISDOT/CADDS SHEET 21

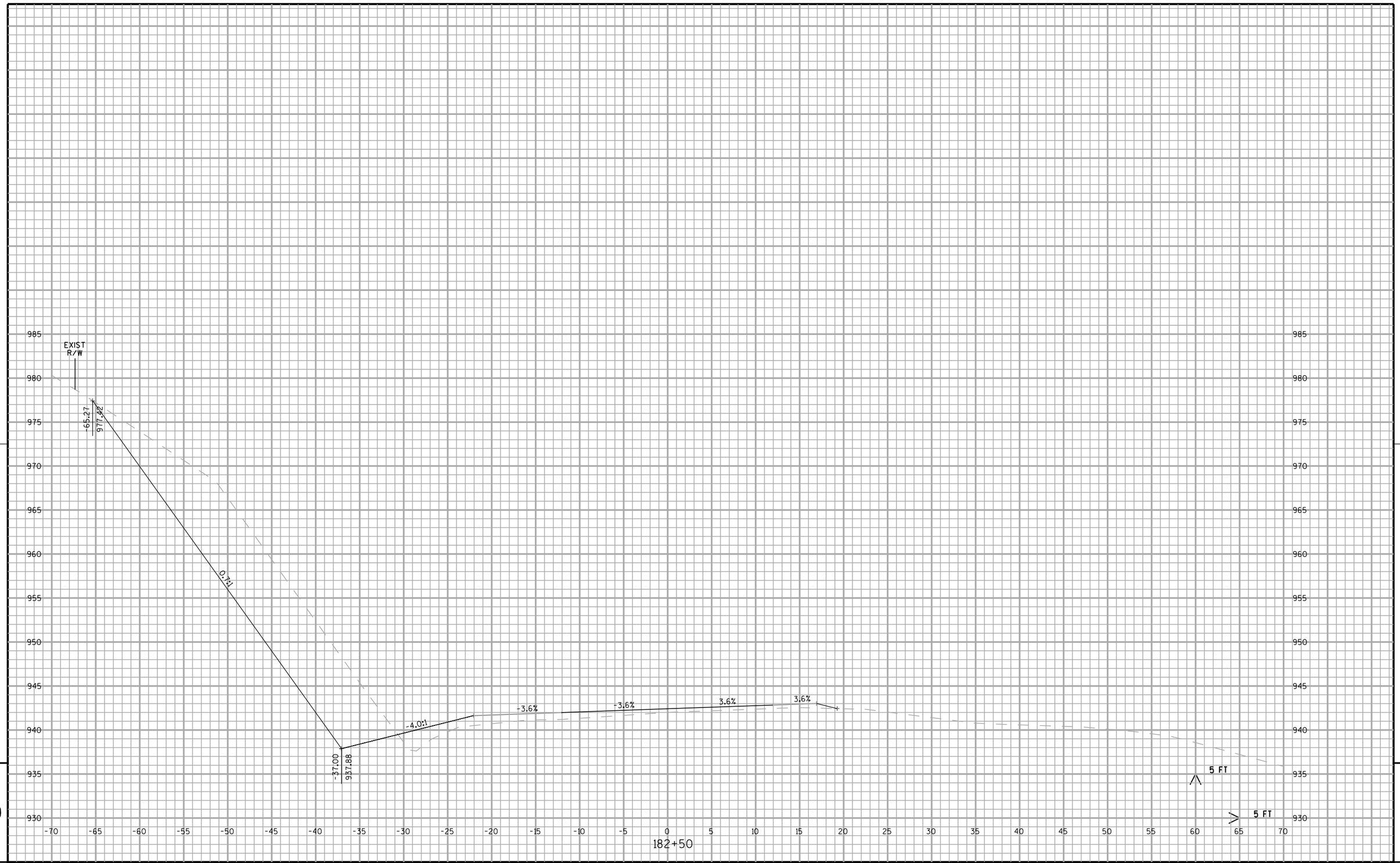

PROJECT NO: 1643-05-75	HWY: USH 14	COUNTY: RICHLAND	CROSS SECTIONS: STA. 182+50 TO STA. 182+50	SHEET 207 E

FILE NAME : L:\Projects\11099\Dwg\090201_xs.dgn PLOT DATE : 08/29/12 PLOT BY : jbainter PLOT NAME : PLOT SCALE : 1:10

WISDOT/CADDS SHEET 21

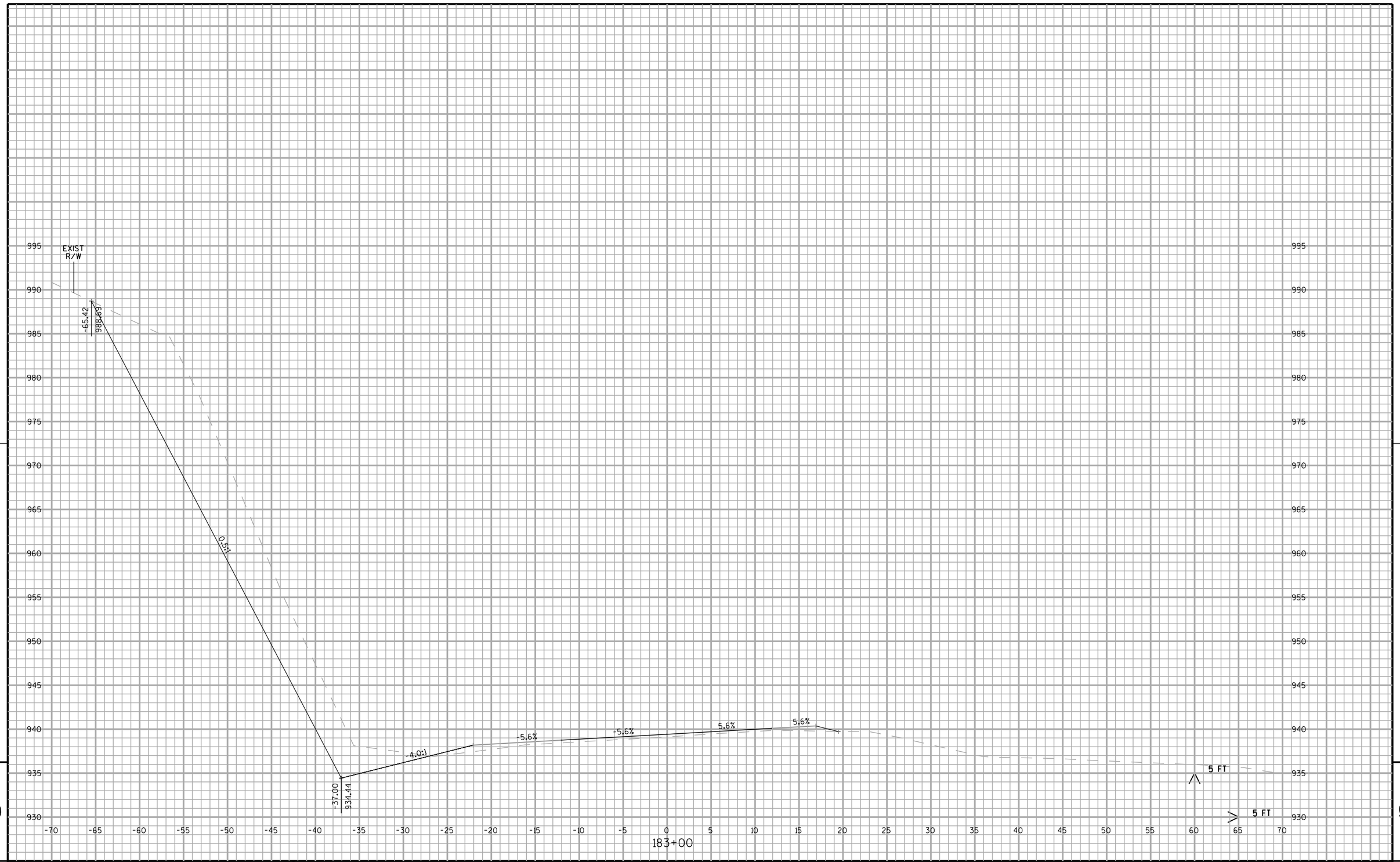

PROJECT NO: 1643-05-75	HWY: USH 14	COUNTY: RICHLAND	CROSS SECTIONS: STA. 183+00 TO STA. 183+00	SHEET E

FILE NAME : L:\Projects\11099\Dwg\090201_xs.dgn PLOT DATE : 08/29/12 PLOT BY : jbainter PLOT NAME : PLOT SCALE : 1:10

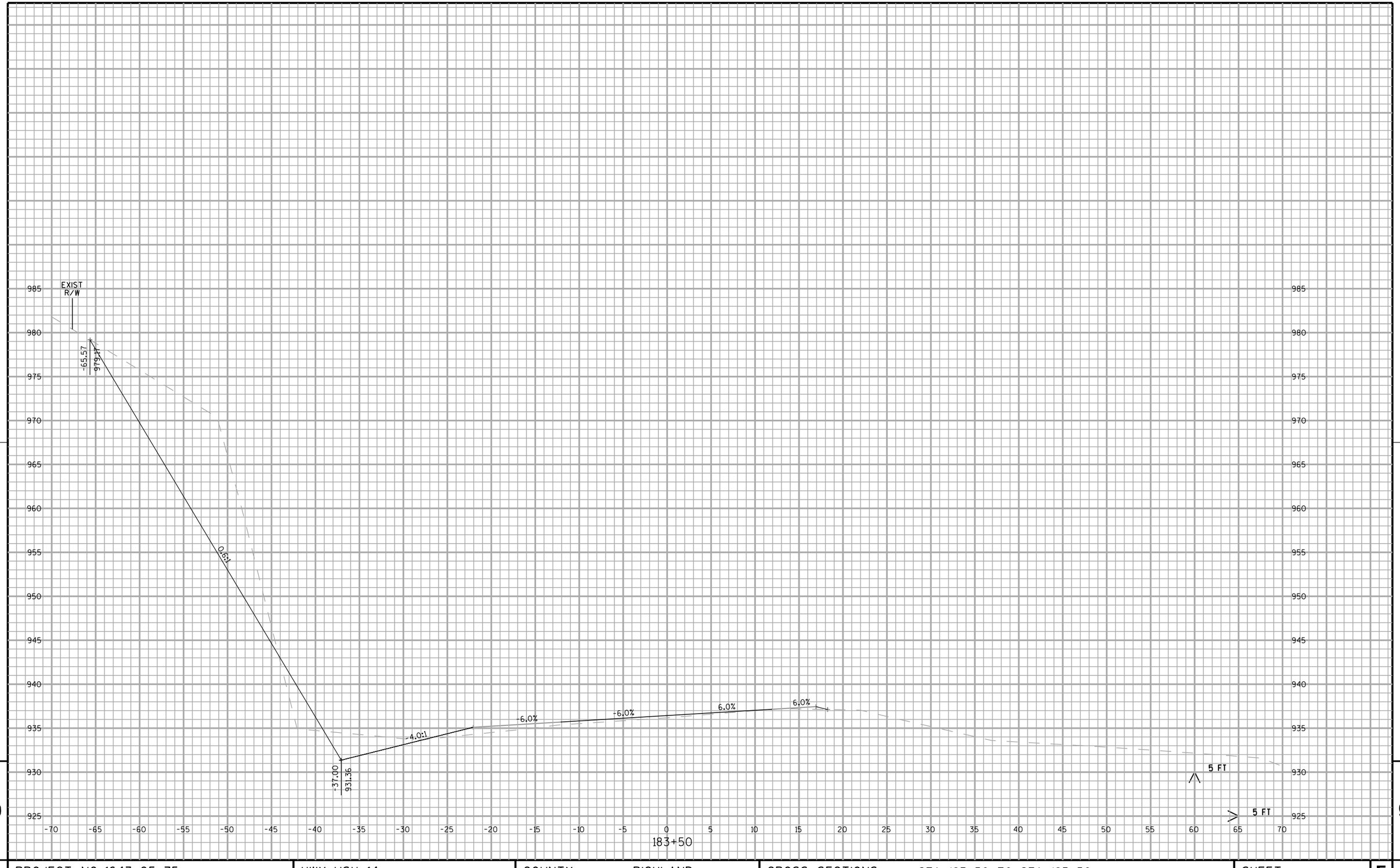

9

9

PROJECT NO: 1643-05-75	HWY: USH 14	COUNTY: RICHLAND	CROSS SECTIONS: STA. 183+50 TO STA. 183+50	SHEET E

FILE NAME : L:\Projects\11099\Dwg\090201_xs.dgn PLOT DATE : 08/29/12 PLOT BY : jbainter PLOT NAME : PLOT SCALE : 1:10

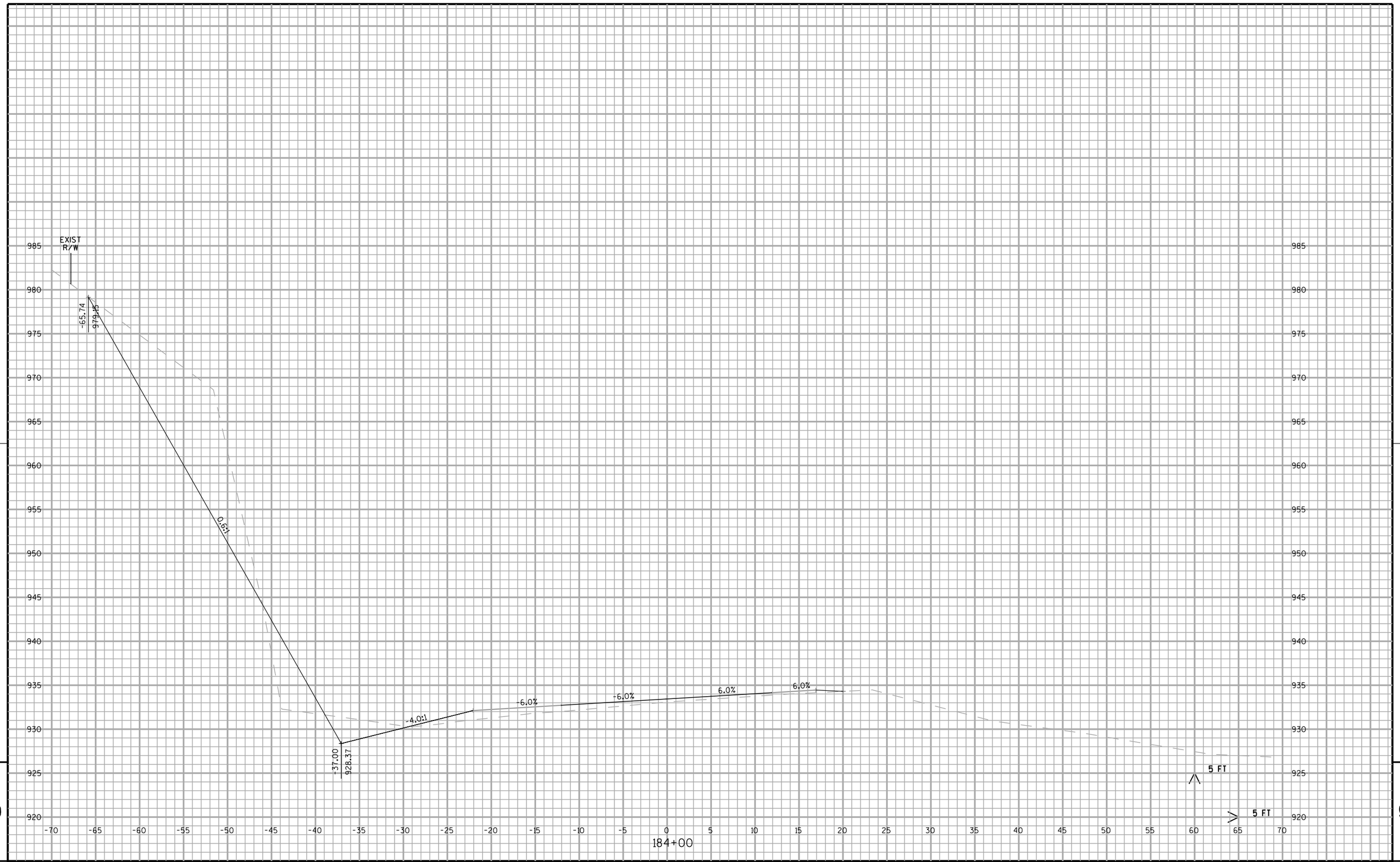

9

9

PROJECT NO: 1643-05-75	HWY: USH 14	COUNTY: RICHLAND	CROSS SECTIONS: STA. 184+00 TO STA. 184+00	SHEET 210 E

FILE NAME : L:\Projects\11099\Dwg\090201_xs.dgn PLOT DATE : 08/29/12 PLOT BY : jbainter PLOT NAME : PLOT SCALE : 1:10

WISDOT/CADDS SHEET 21

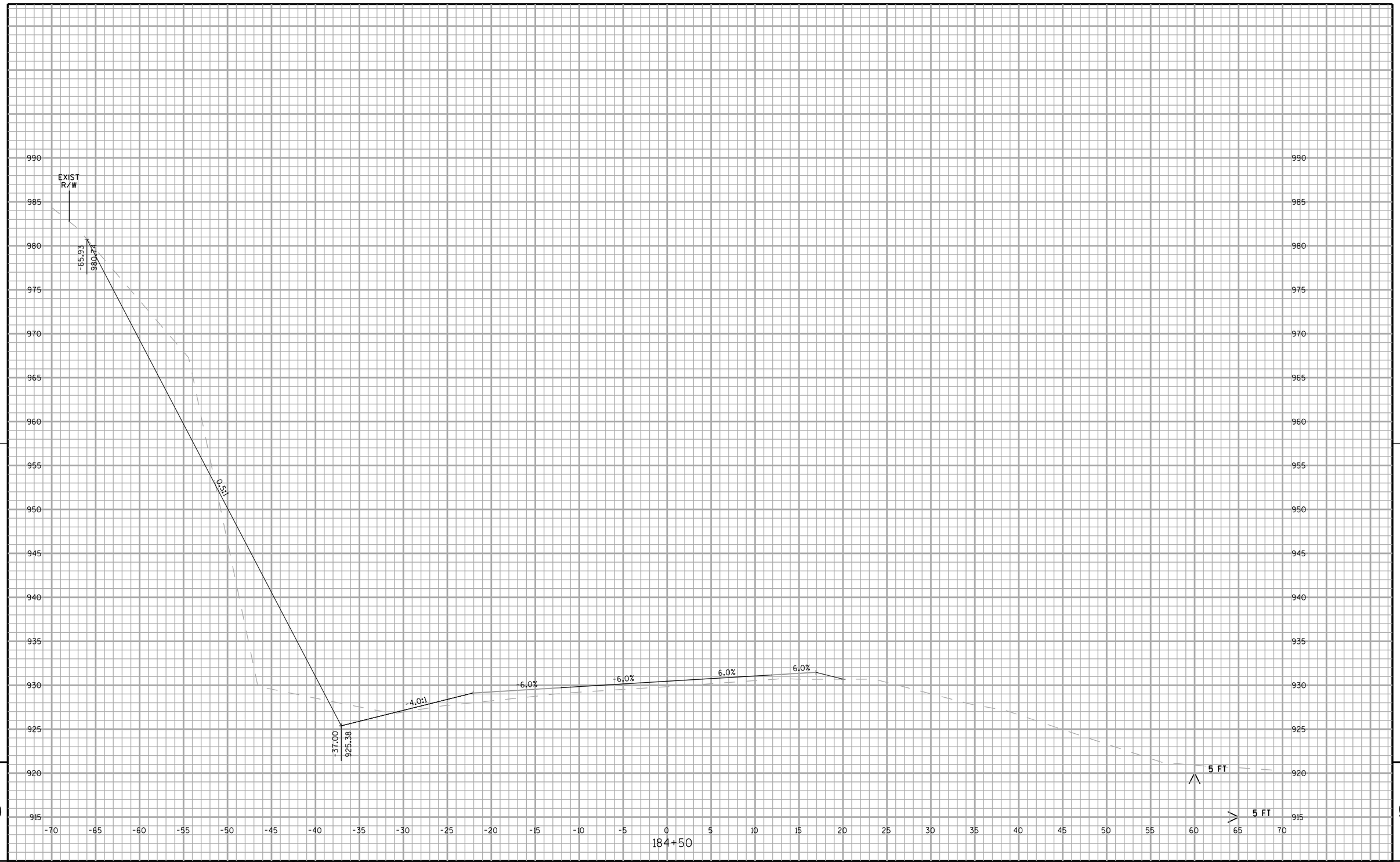

9

9

PROJECT NO: 1643-05-75	HWY: USH 14	COUNTY: RICHLAND	CROSS SECTIONS: STA. 184+50 TO STA. 184+50	SHEET 211 E

FILE NAME : L:\Projects\11099\Dwg\090201_xs.dgn PLOT DATE : 08/29/12 PLOT BY : jbainter PLOT NAME : PLOT SCALE : 1:10

PROJECT NO: 1643-05-75	HWY: USH 14	COUNTY: RICHLAND	CROSS SECTIONS: STA. 185+00 TO STA. 185+00	SHEET 212 E

FILE NAME : L:\Projects\11099\Dwg\090201_xs.dgn PLOT DATE : 08/29/12 PLOT BY : jbainter PLOT NAME : PLOT SCALE : 1:10

WISDOT/CADDS SHEET 21

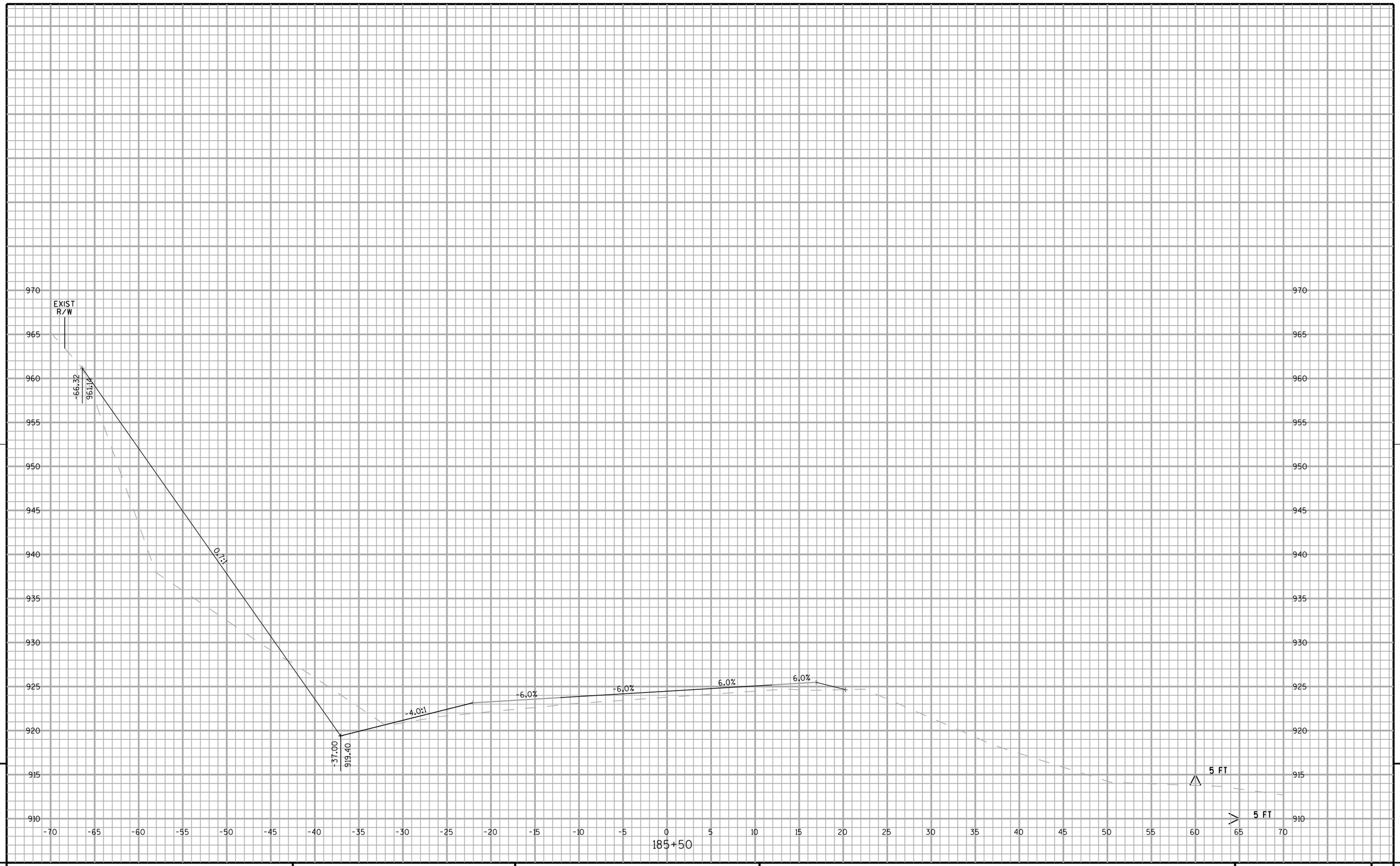

PROJECT NO: 1643-05-75	HWY: USH 14	COUNTY: RICHLAND	CROSS SECTIONS: STA. 185+50 TO STA. 185+50	SHEET 213 E

FILE NAME : L:\Projects\11099\Dwg\090201_xs.dgn PLOT DATE : 08/29/12 PLOT BY : jbainter PLOT NAME : PLOT SCALE : 1:10

WISDOT/CADDS SHEET 21

PROJECT NO: 1643-05-75	HWY: USH 14	COUNTY: RICHLAND	CROSS SECTIONS: STA. 186+00 TO STA. 186+00	SHEET 214 E

FILE NAME : L:\Projects\11099\Dwg\090201_xs.dgn PLOT DATE : 08/29/12 PLOT BY : jbainter PLOT NAME : PLOT SCALE : 1:10

WISDOT/CADDS SHEET 21

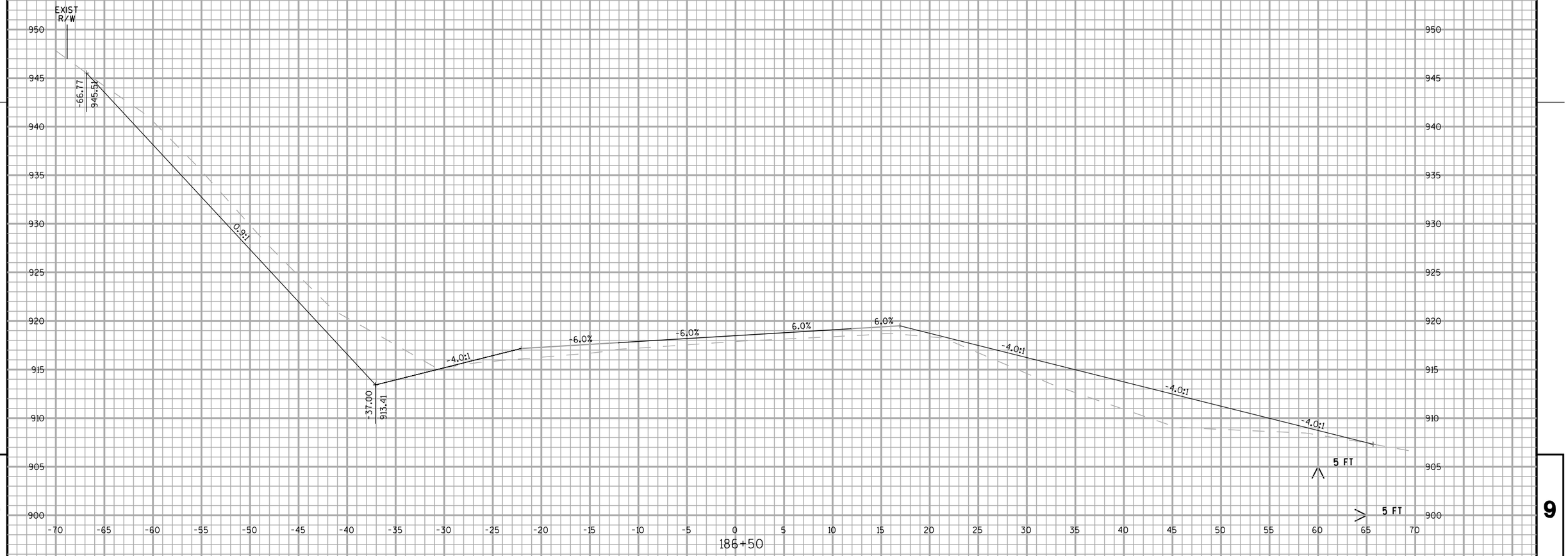

9

9

PROJECT NO: 1643-05-75	HWY: USH 14	COUNTY: RICHLAND	CROSS SECTIONS: STA. 186+50 TO STA. 186+50	SHEET 215	E

FILE NAME : L:\Projects\11099\Dwg\090201_xs.dgn PLOT DATE : 08/29/12 PLOT BY : jbainter PLOT NAME : PLOT SCALE : 1:10

WISDOT/CADDS SHEET 21

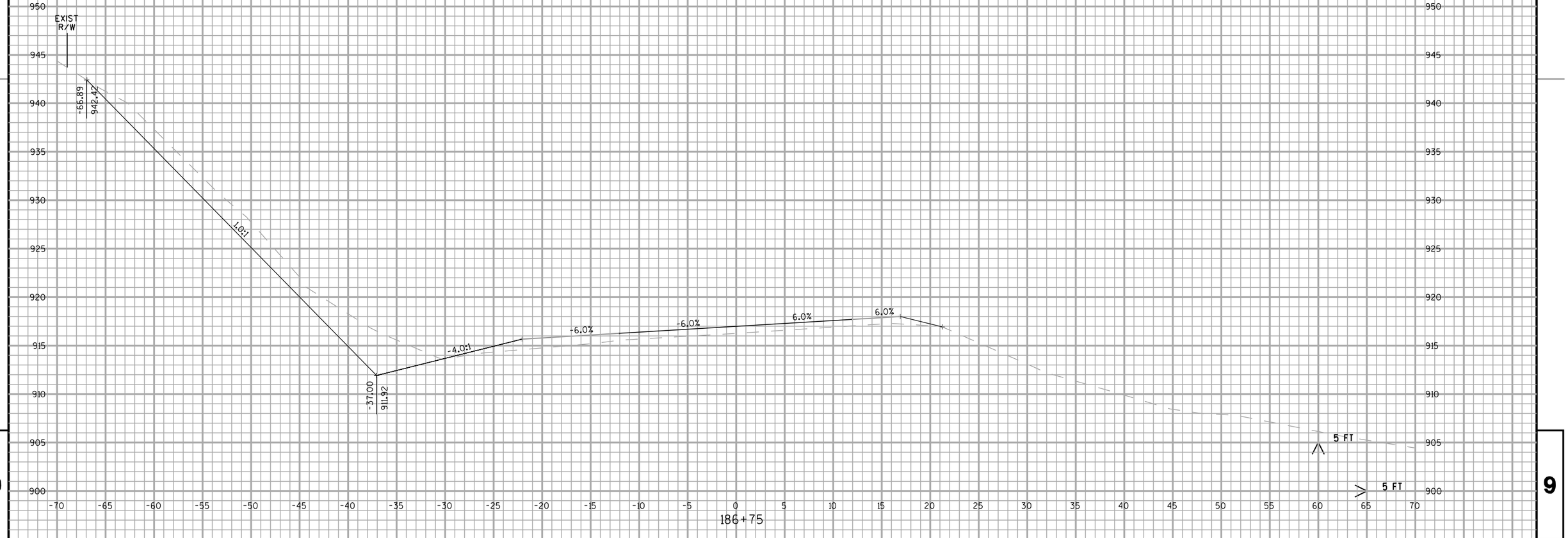

PROJECT NO: 1643-05-75	HWY: USH 14	COUNTY: RICHLAND	CROSS SECTIONS: STA. 186+75 TO STA. 186+75	SHEET 216 E

FILE NAME : L:\Projects\11099\Dwg\090201_xs.dgn PLOT DATE : 08/29/12 PLOT BY : jbainter PLOT NAME : PLOT SCALE : 1:10

WISDOT/CADDS SHEET 21

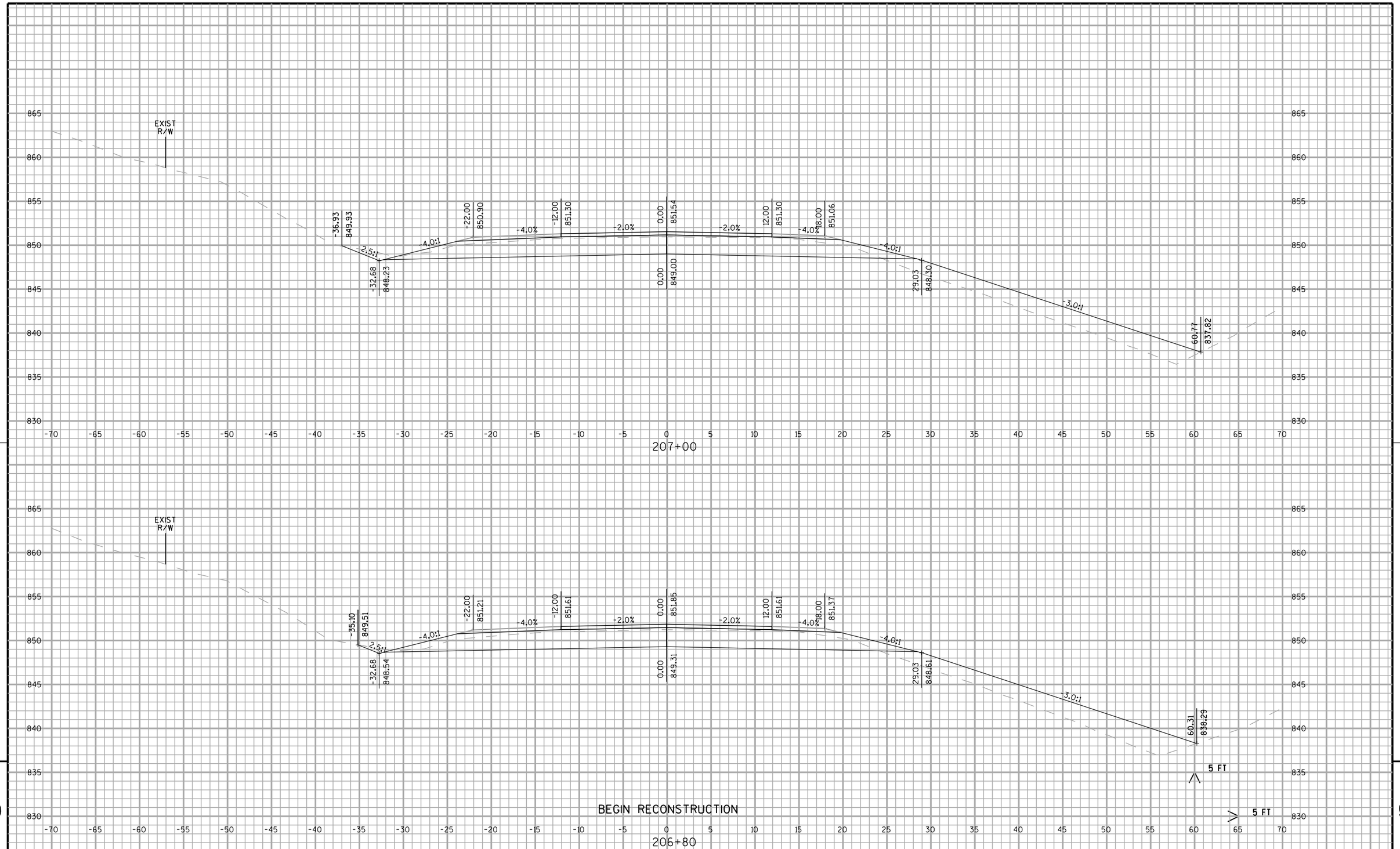

PROJECT NO: 1643-05-75	HWY: USH 14	COUNTY: RICHLAND	CROSS SECTIONS: STA. 206+80 TO STA. 207+00	SHEET 217 E

FILE NAME : L:\Projects\11099\Dwg\090201_xs.dgn PLOT DATE : 08/29/12 PLOT BY : jbainter PLOT NAME : PLOT SCALE : 1:10

WISDOT/CADDS SHEET 21

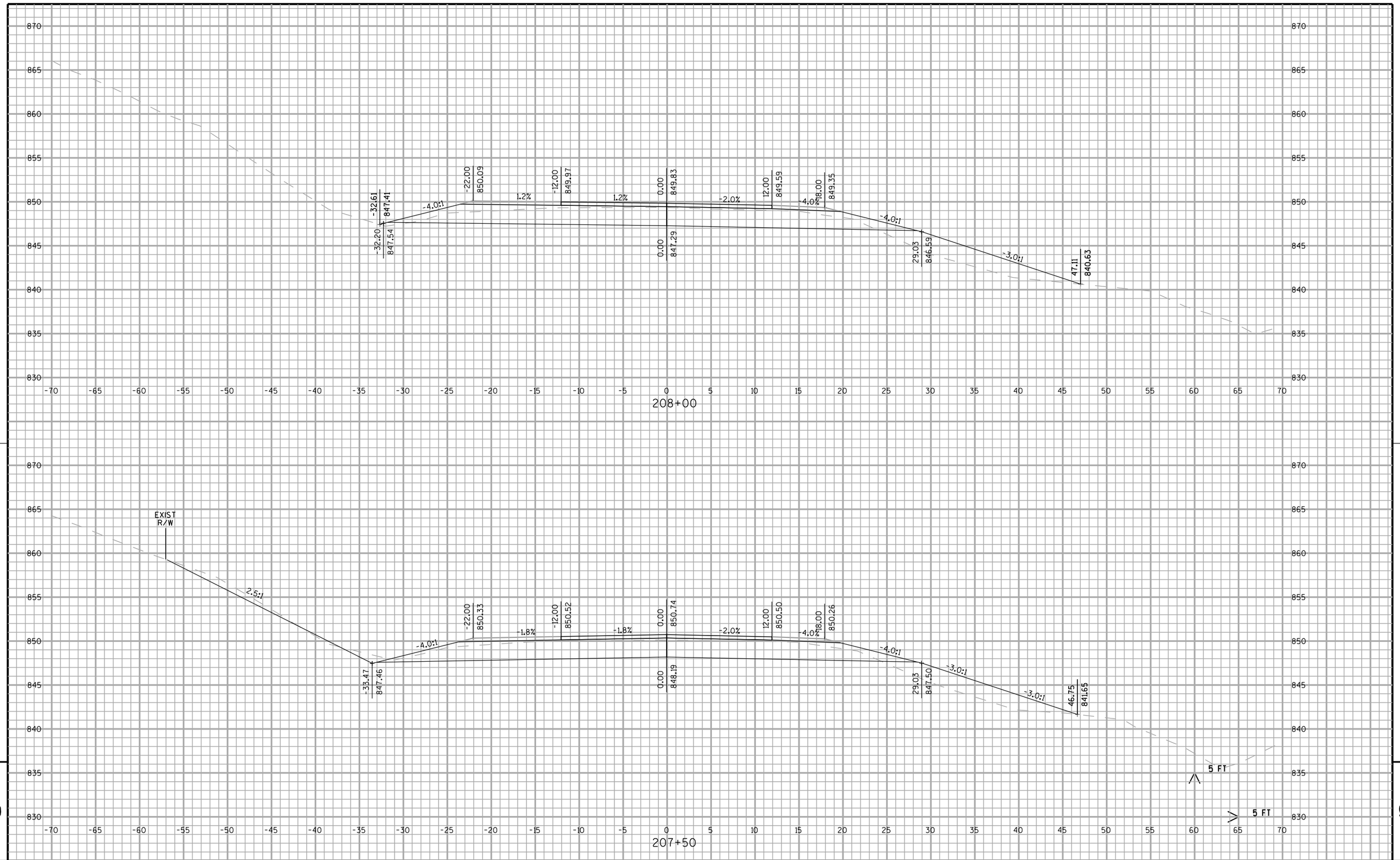

PROJECT NO: 1643-05-75	HWY: USH 14	COUNTY: RICHLAND	CROSS SECTIONS: STA. 207+50 TO STA. 208+00	SHEET 218 E

FILE NAME : L:\Projects\11099\Dwg\090201_xs.dgn PLOT DATE : 08/29/12 PLOT BY : jbainter PLOT NAME : PLOT SCALE : 1:10

WISDOT/CADDS SHEET 21

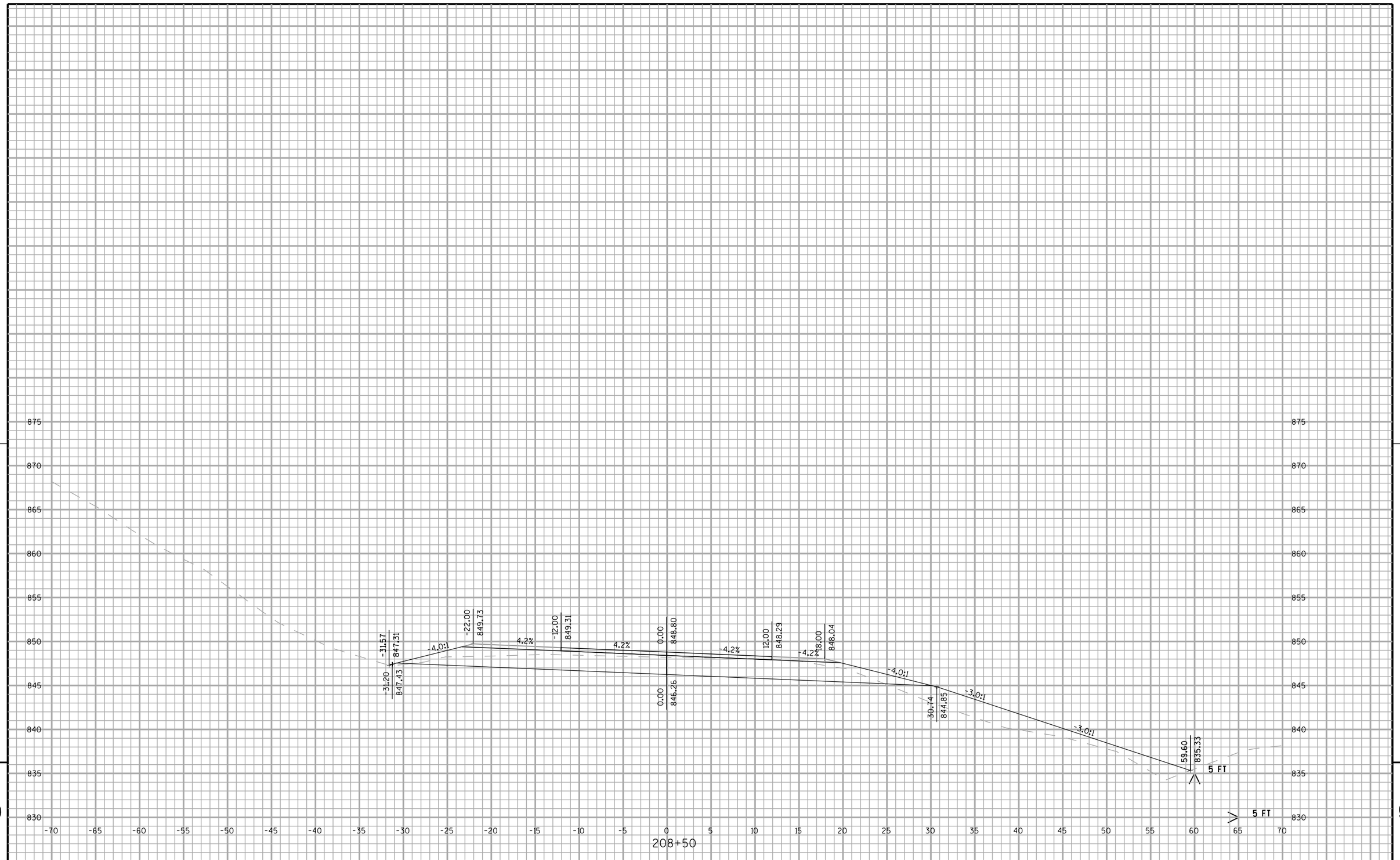

PROJECT NO: 1643-05-75	HWY: USH 14	COUNTY: RICHLAND	CROSS SECTIONS: STA. 208+50 TO STA. 208+50	SHEET E

FILE NAME : L:\Projects\11099\Dwg\090201_xs.dgn PLOT DATE : 08/29/12 PLOT BY : jbainter PLOT NAME : PLOT SCALE : 1:10

WISDOT/CADDS SHEET 21

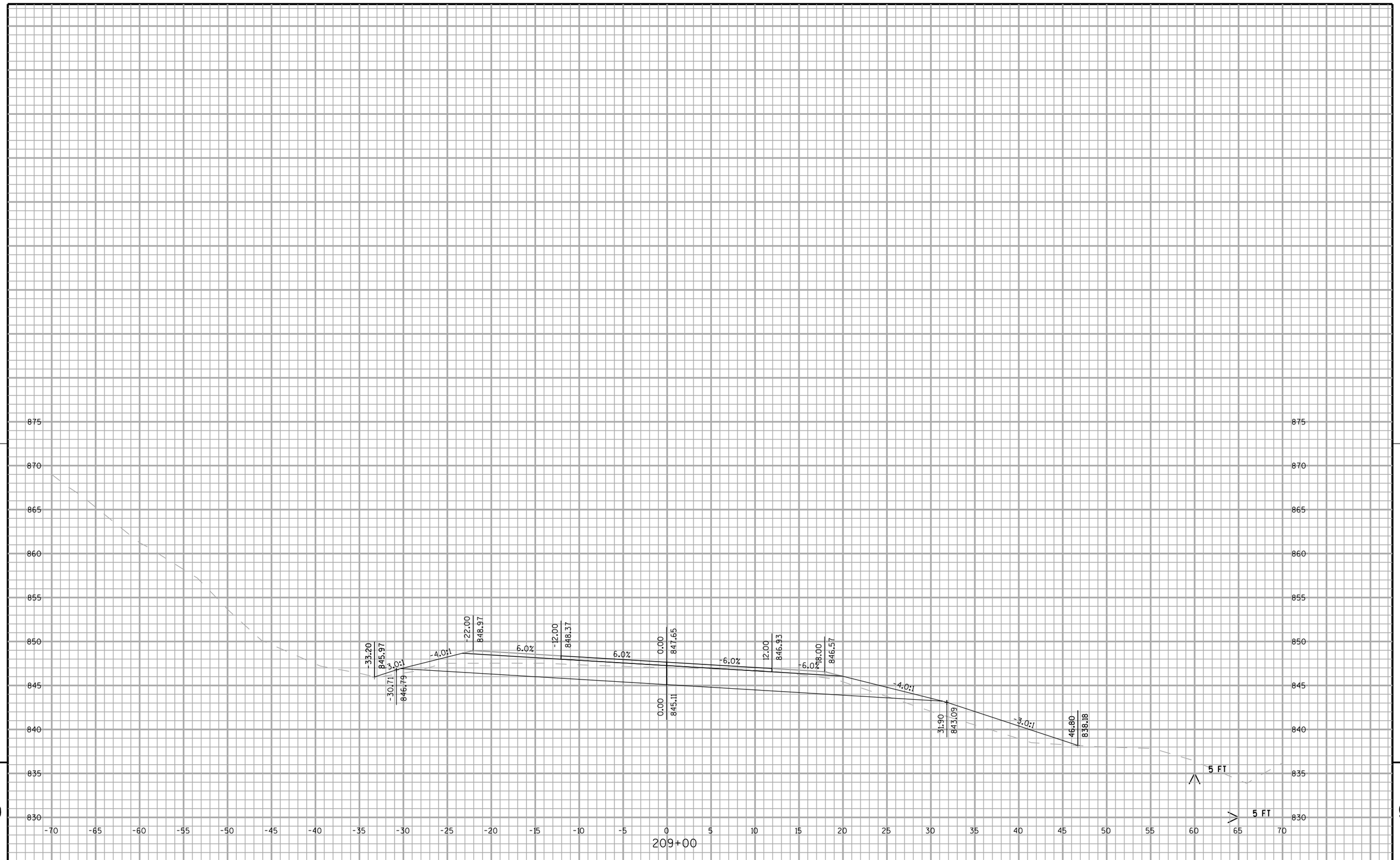

9

9

PROJECT NO: 1643-05-75	HWY: USH 14	COUNTY: RICHLAND	CROSS SECTIONS: STA. 209+00 TO STA. 209+00	SHEET 220	E

FILE NAME : L:\Projects\11099\Dwg\090201_xs.dgn PLOT DATE : 08/29/12 PLOT BY : jbainter PLOT NAME : PLOT SCALE : 1:10

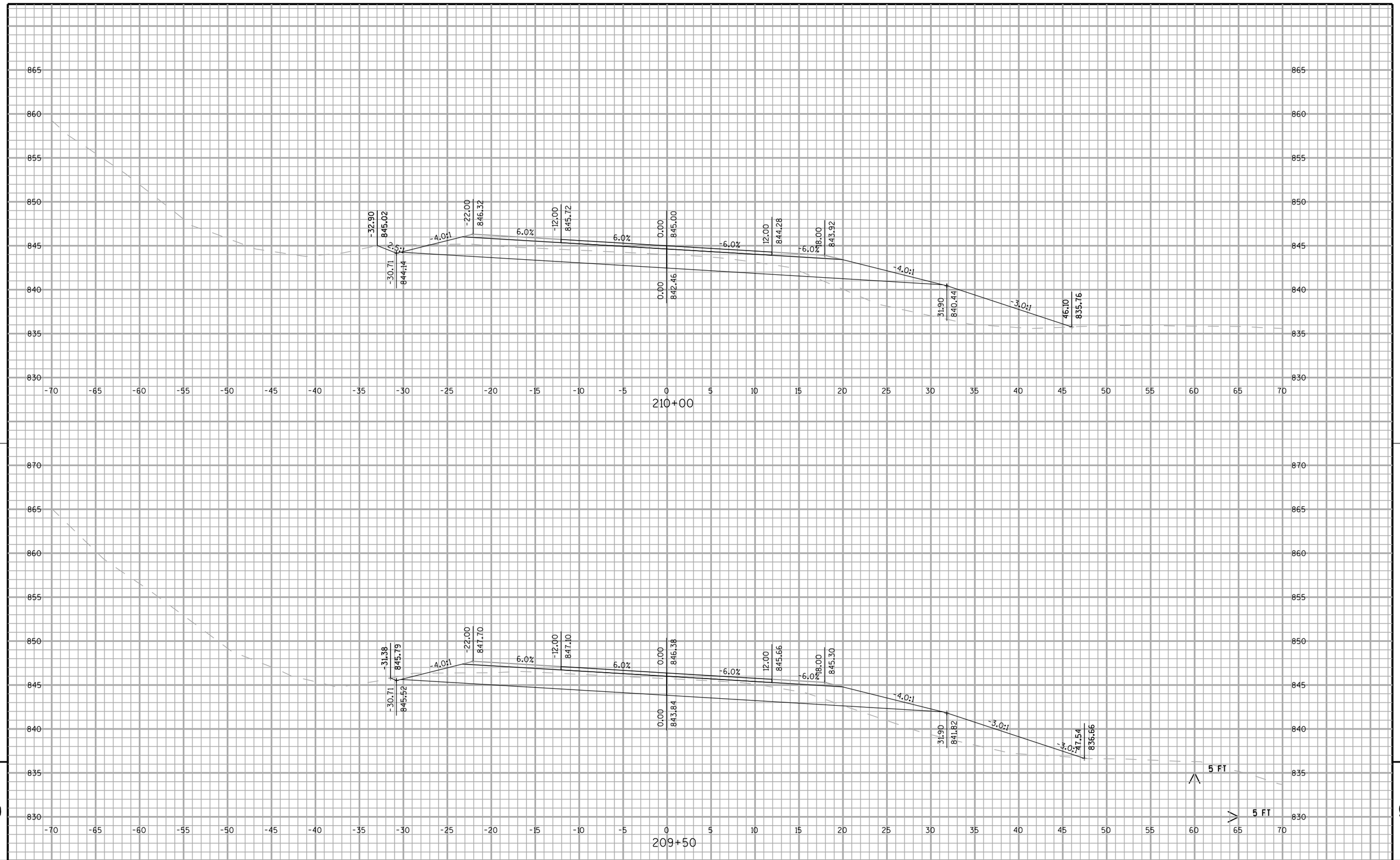

PROJECT NO: 1643-05-75	HWY: USH 14	COUNTY: RICHLAND	CROSS SECTIONS: STA. 209+50 TO STA. 210+00	SHEET 221 E

FILE NAME : L:\Projects\11099\Dwg\090201_xs.dgn PLOT DATE : 08/29/12 PLOT BY : jbainter PLOT NAME : PLOT SCALE : 1:10

WISDOT/CADDS SHEET 21

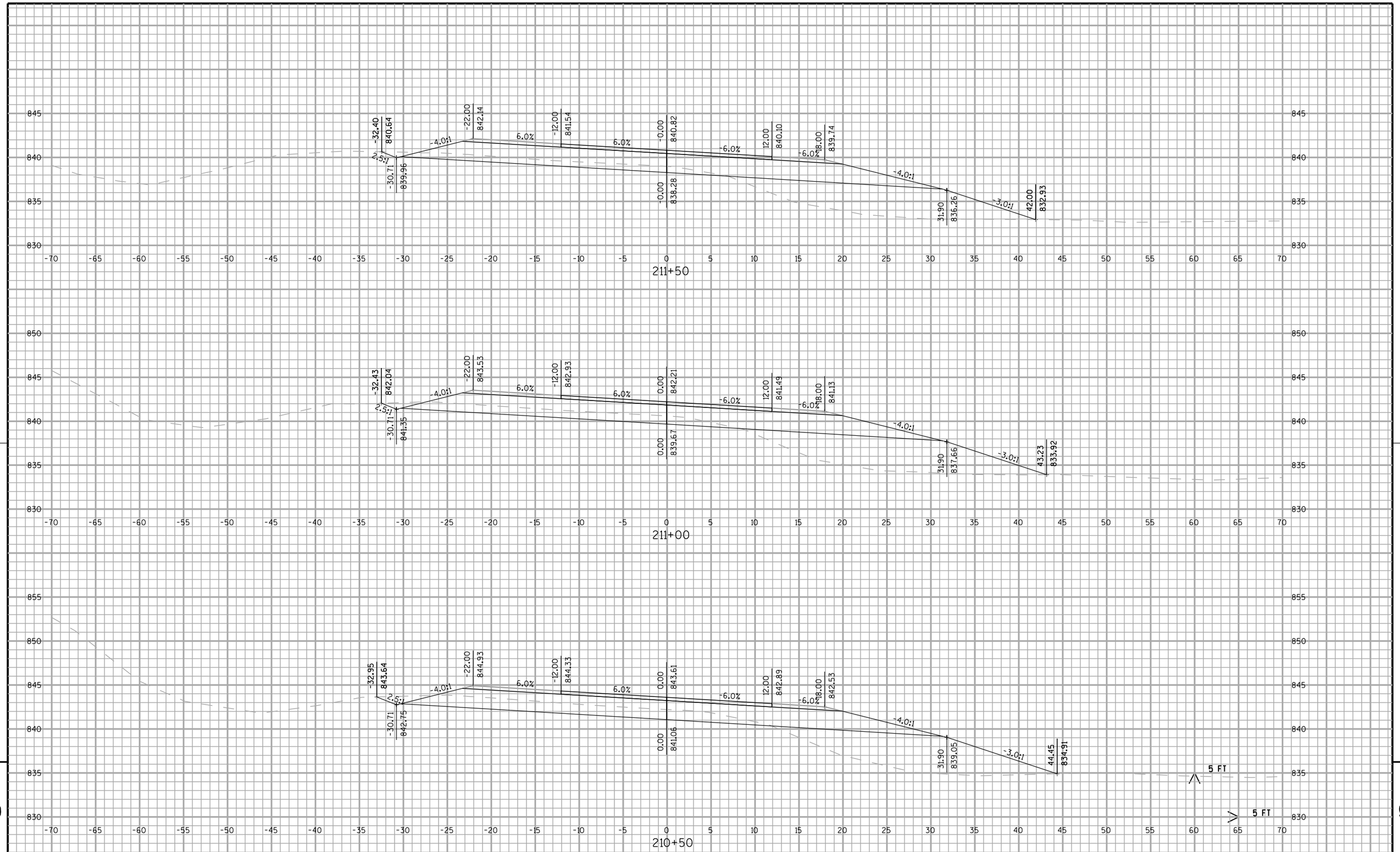

PROJECT NO: 1643-05-75	HWY: USH 14	COUNTY: RICHLAND	CROSS SECTIONS: STA. 210+50 TO STA. 211+50	SHEET 222 E

FILE NAME : L:\Projects\11099\Dwg\090201_xs.dgn PLOT DATE : 08/29/12 PLOT BY : jbainter PLOT NAME : PLOT SCALE : 1:10

WISDOT/CADDS SHEET 21

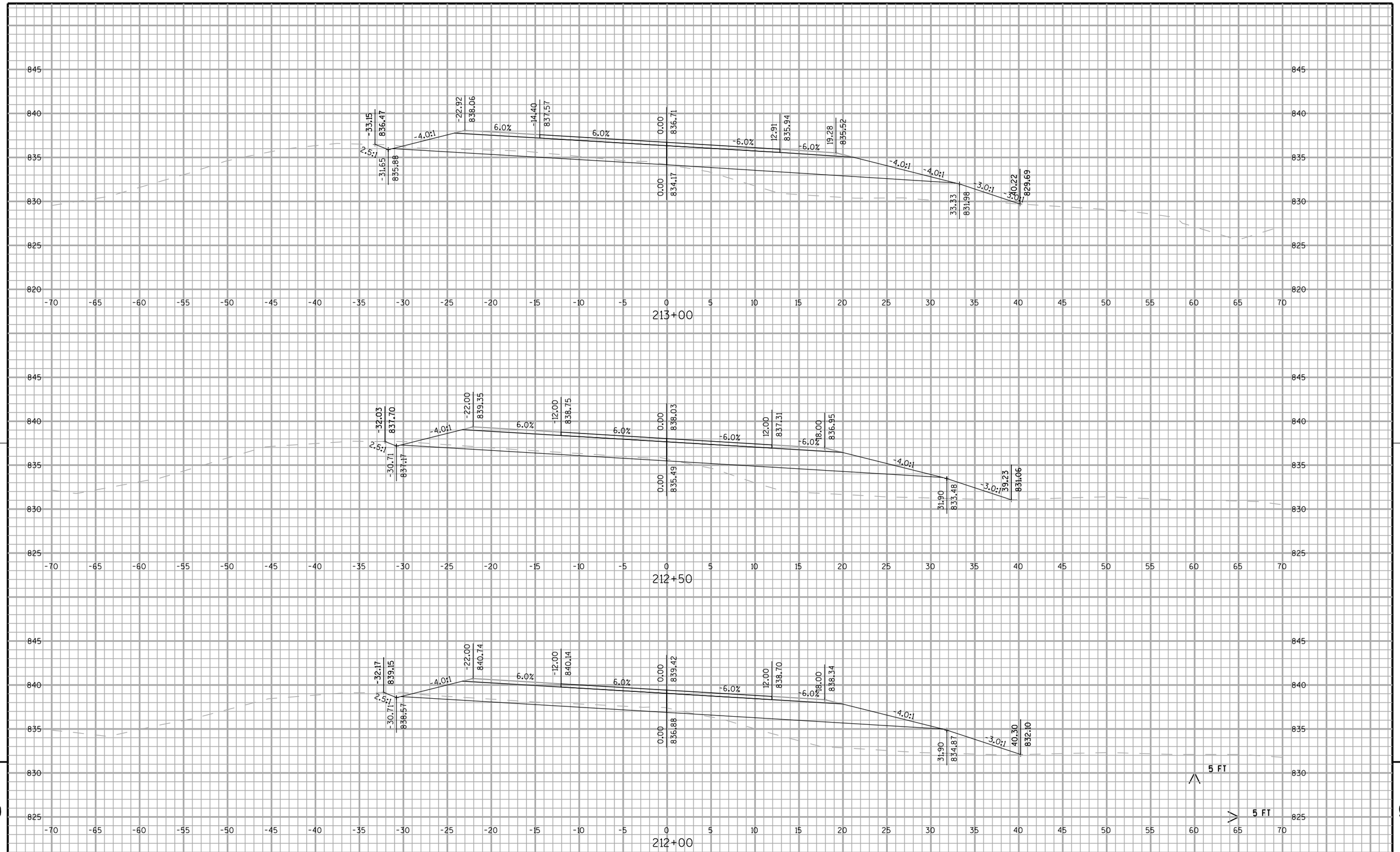

PROJECT NO: 1643-05-75	HWY: USH 14	COUNTY: RICHLAND	CROSS SECTIONS: STA. 212+00 TO STA. 213+00	SHEET 223	E

FILE NAME : L:\Projects\11099\Dwg\090201_xs.dgn PLOT DATE : 08/29/12 PLOT BY : jbainter PLOT NAME : PLOT SCALE : 1:10

WISDOT/CADDS SHEET 21

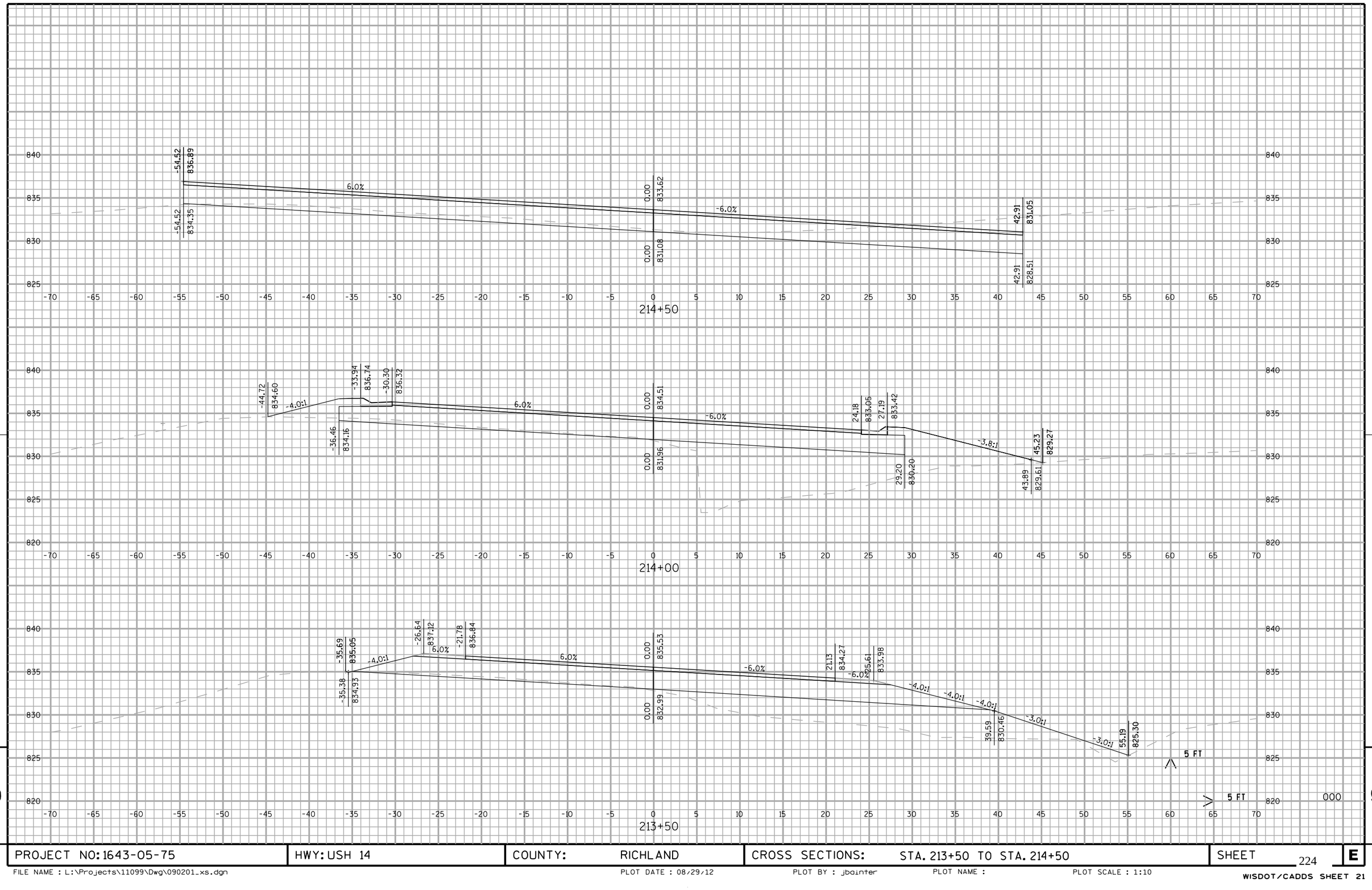

PROJECT NO: 1643-05-75	HWY: USH 14	COUNTY: RICHLAND	CROSS SECTIONS: STA. 213+50 TO STA. 214+50	SHEET 224	E

FILE NAME : L:\Projects\11099\Dwg\090201_xs.dgn PLOT DATE : 08/29/12 PLOT BY : jbainter PLOT NAME : PLOT SCALE : 1:10

WISDOT/CADDS SHEET 21

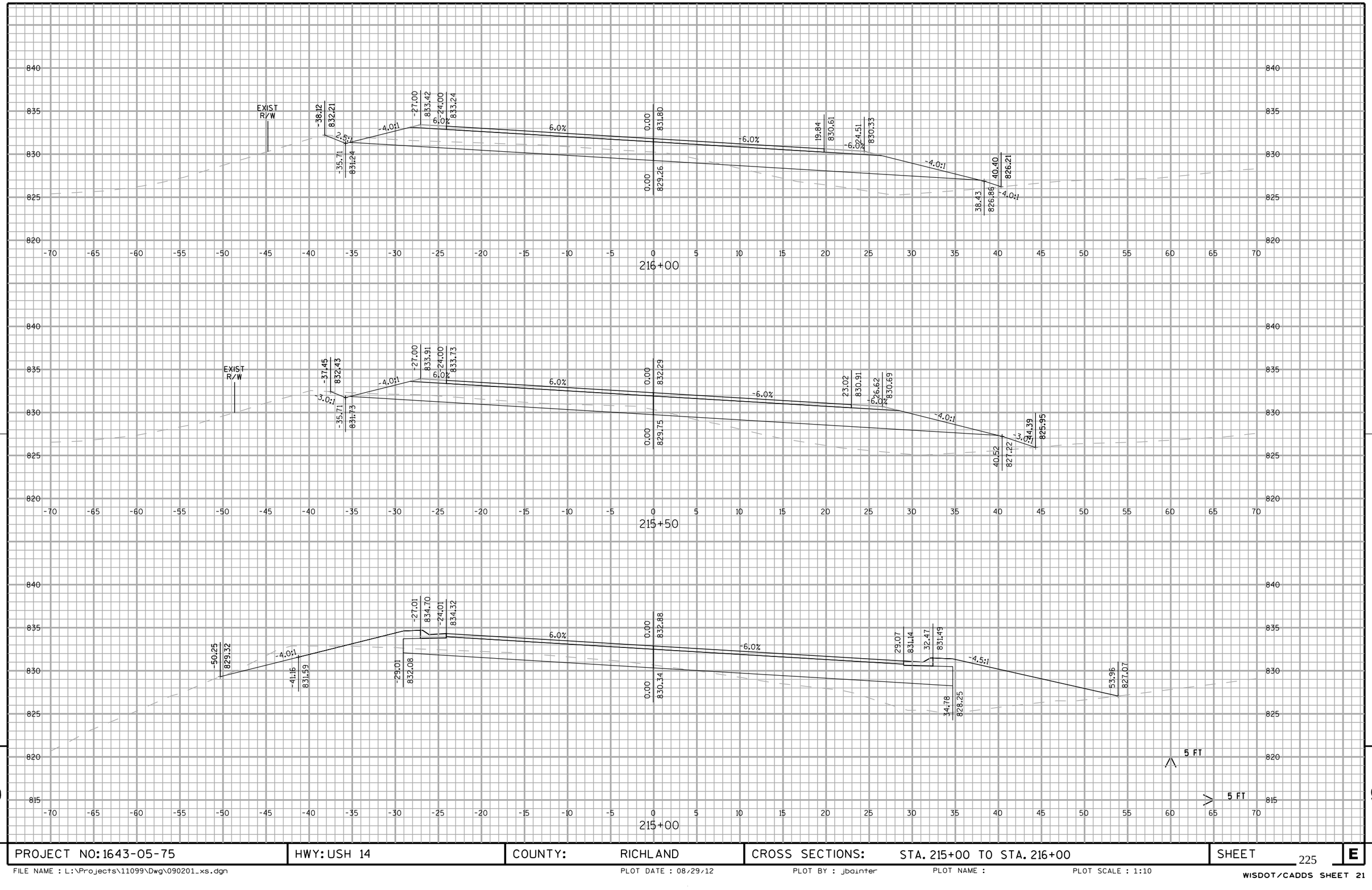

PROJECT NO: 1643-05-75	HWY: USH 14	COUNTY: RICHLAND	CROSS SECTIONS: STA. 215+00 TO STA. 216+00	SHEET 225	E

FILE NAME : L:\Projects\11099\Dwg\090201_xs.dgn PLOT DATE : 08/29/12 PLOT BY : jbainter PLOT NAME : PLOT SCALE : 1:10

WISDOT/CADDS SHEET 21

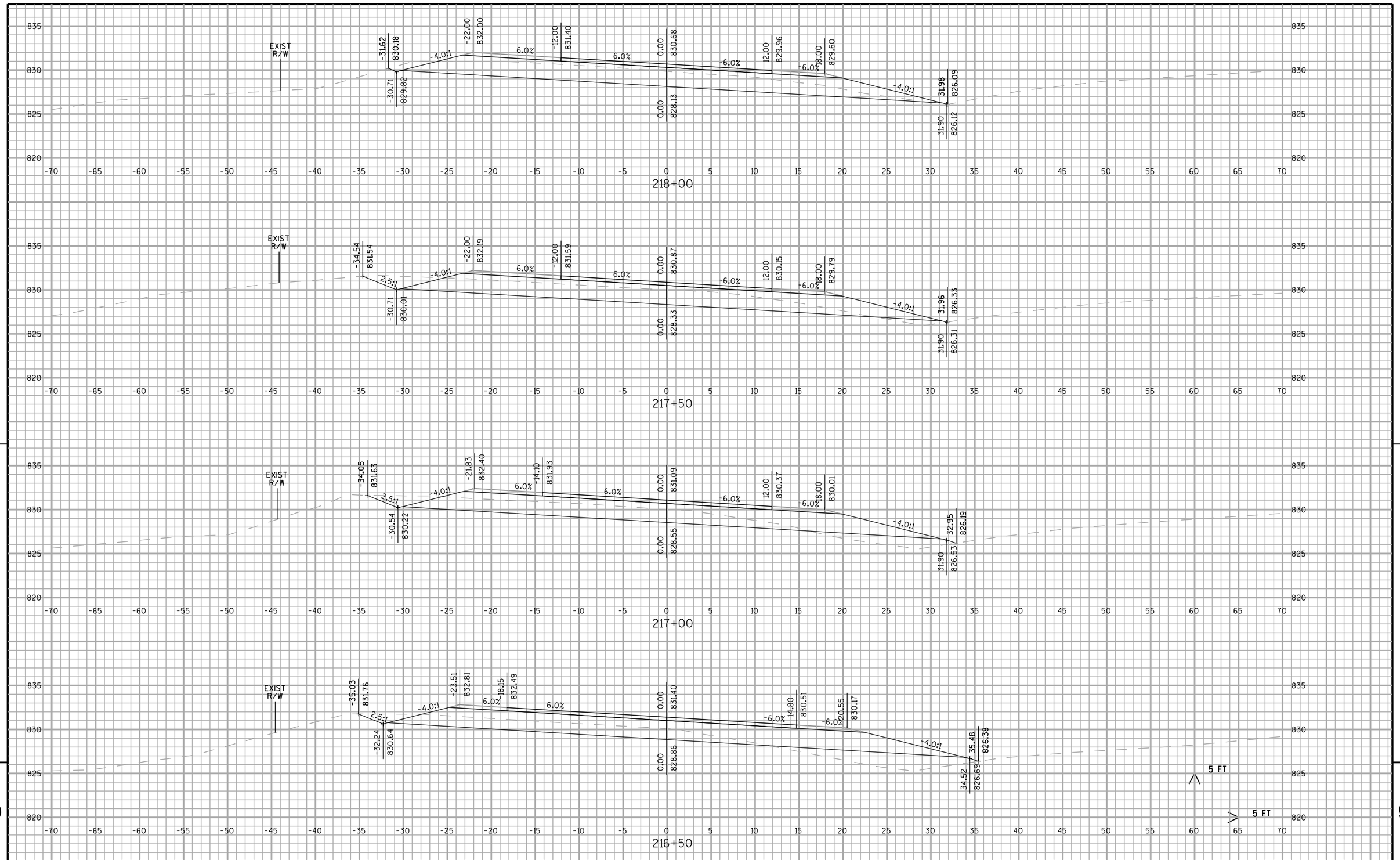

PROJECT NO: 1643-05-75	HWY: USH 14	COUNTY: RICHLAND	CROSS SECTIONS: STA. 216+50 TO STA. 218+00	SHEET E

FILE NAME : L:\Projects\11099\Dwg\090201_xs.dgn | PLOT DATE : 08/29/12 | PLOT BY : jbainter | PLOT NAME : | PLOT SCALE : 1:10

WISDOT/CADDS SHEET 21

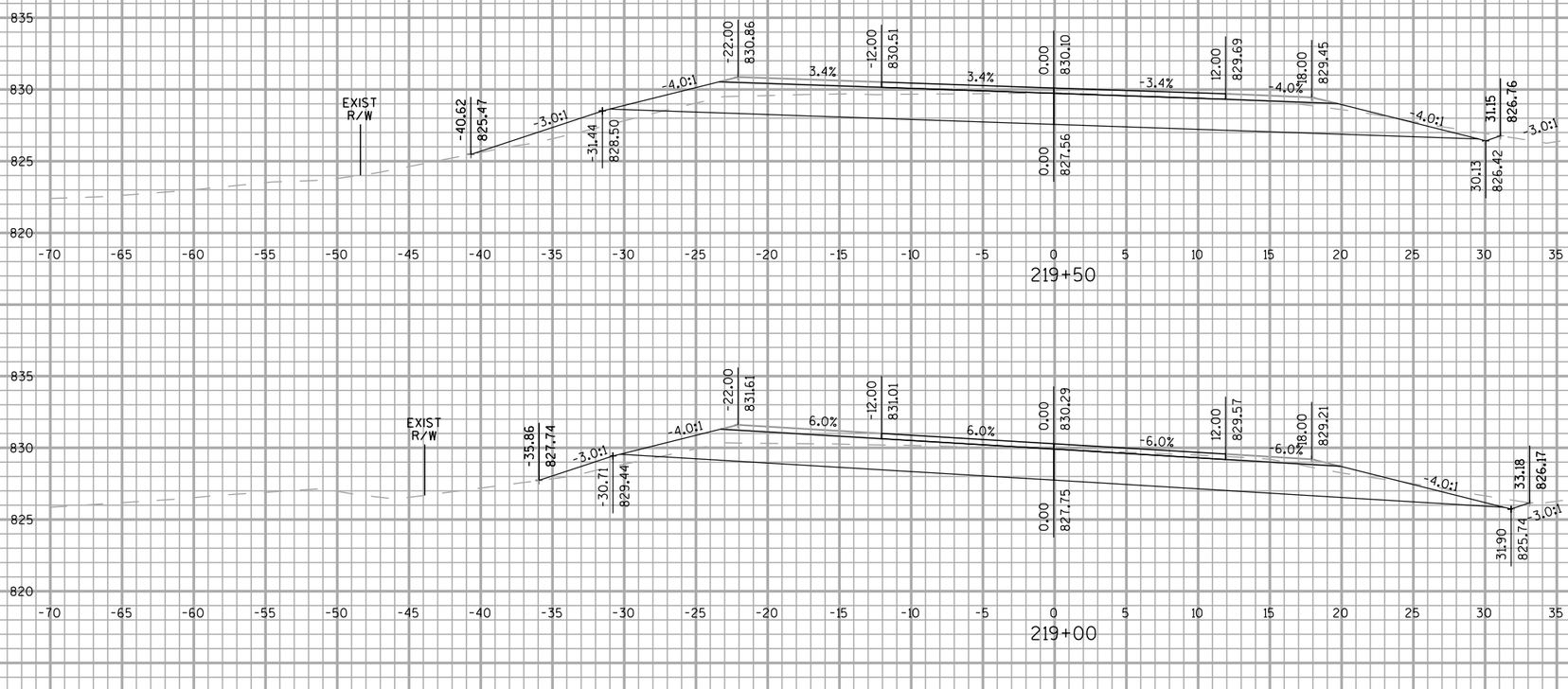

PROJECT NO: 1643-05-75	HWY: USH 14	COUNTY: RICHLAND	CROSS SECTIONS: STA. 218+50 TO STA. 219+50	SHEET 227 E

FILE NAME : L:\Projects\11099\Dwg\090201_xs.dgn | PLOT DATE : 08/29/12 | PLOT BY : jbainter | PLOT NAME : | PLOT SCALE : 1:10

WISDOT/CADDS SHEET 21

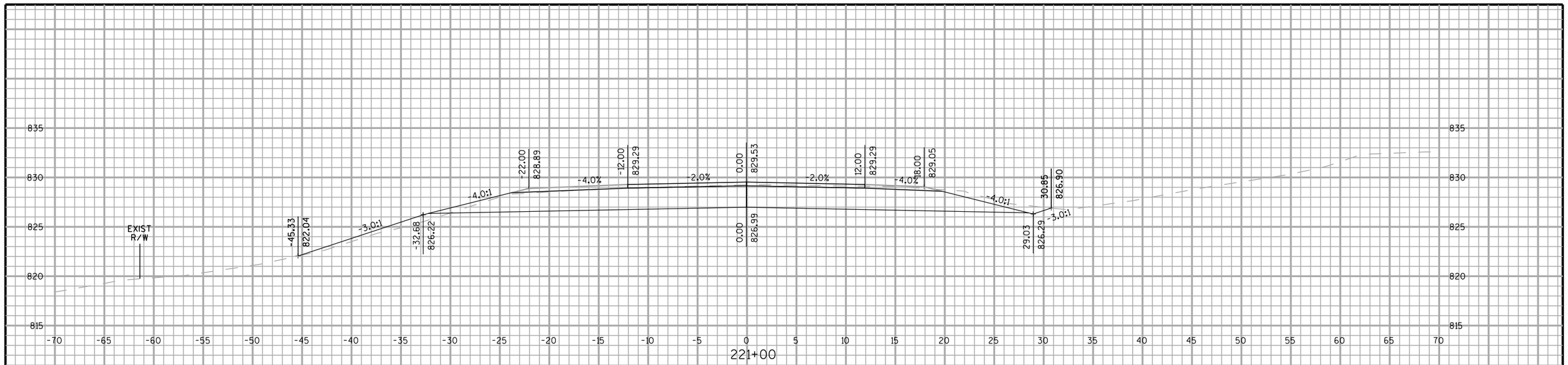

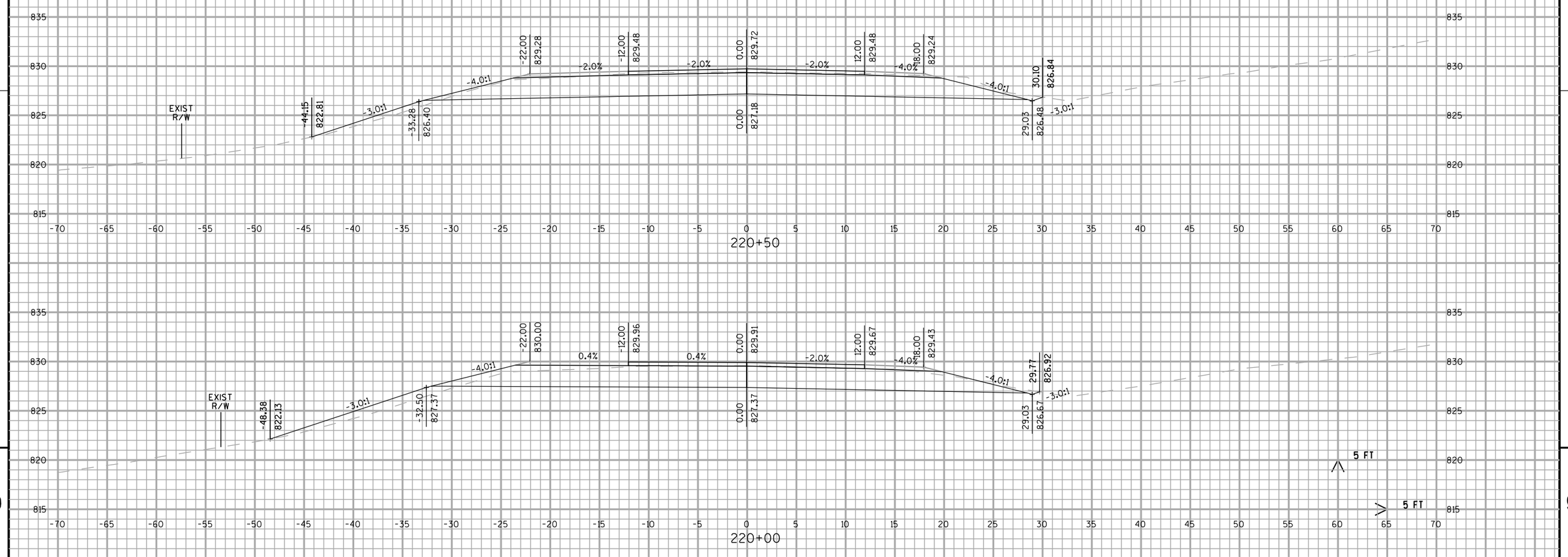

9

9

PROJECT NO: 1643-05-75	HWY: USH 14	COUNTY: RICHLAND	CROSS SECTIONS: STA. 220+00 TO STA. 221+00	SHEET 228 E

FILE NAME : L:\Projects\11099\Dwg\090201_xs.dgn PLOT DATE : 08/29/12 PLOT BY : jbainter PLOT NAME : PLOT SCALE : 1:10

WISDOT/CADDS SHEET 21

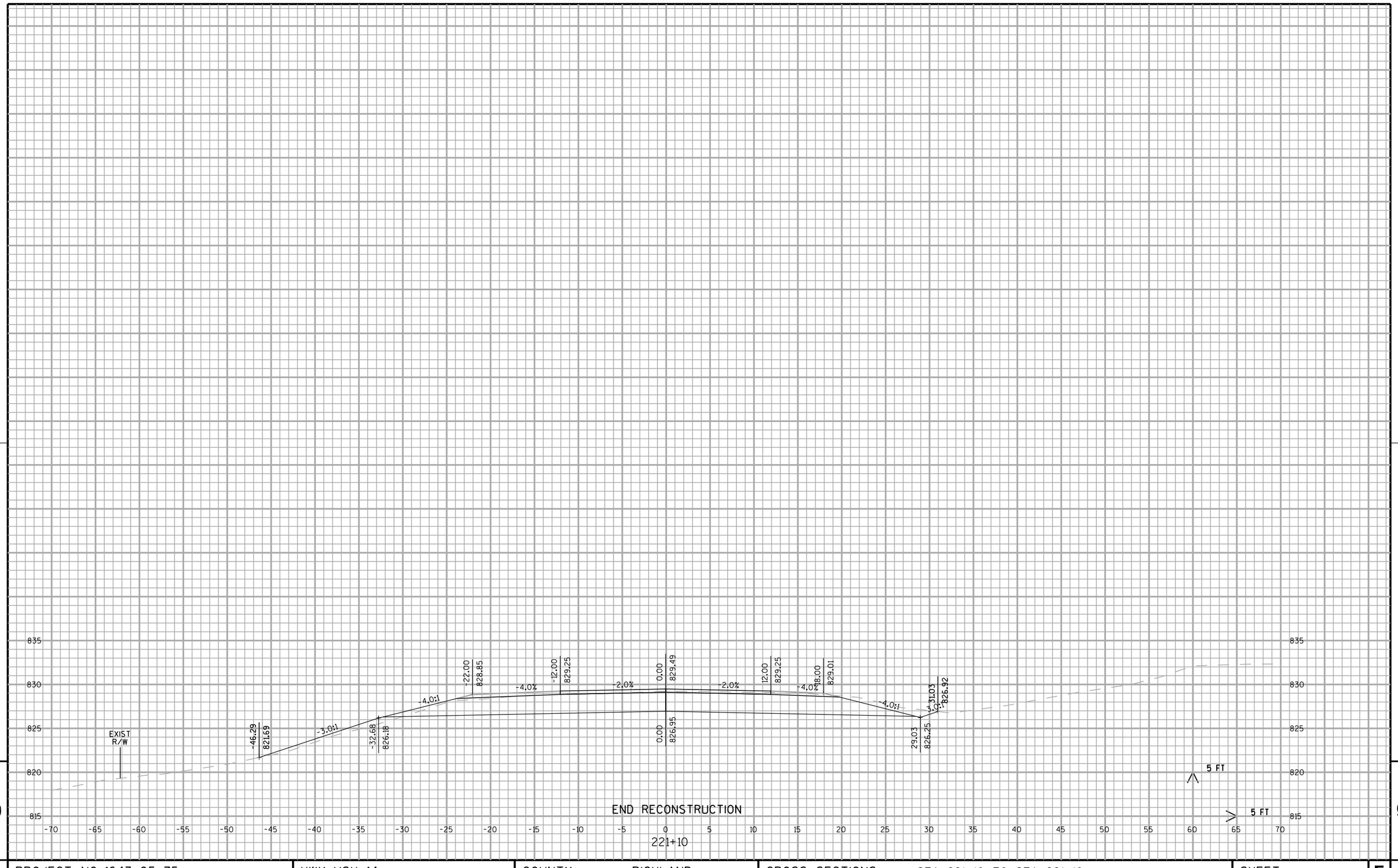

9

9

PROJECT NO: 1643-05-75	HWY: USH 14	COUNTY: RICHLAND	CROSS SECTIONS: STA. 221+10 TO STA. 221+10	SHEET E

FILE NAME : L:\Projects\11099\Dwg\090201_xs.dgn PLOT DATE : 08/29/12 PLOT BY : jbainter PLOT NAME : PLOT SCALE : 1:10

WISDOT/CADDS SHEET 21

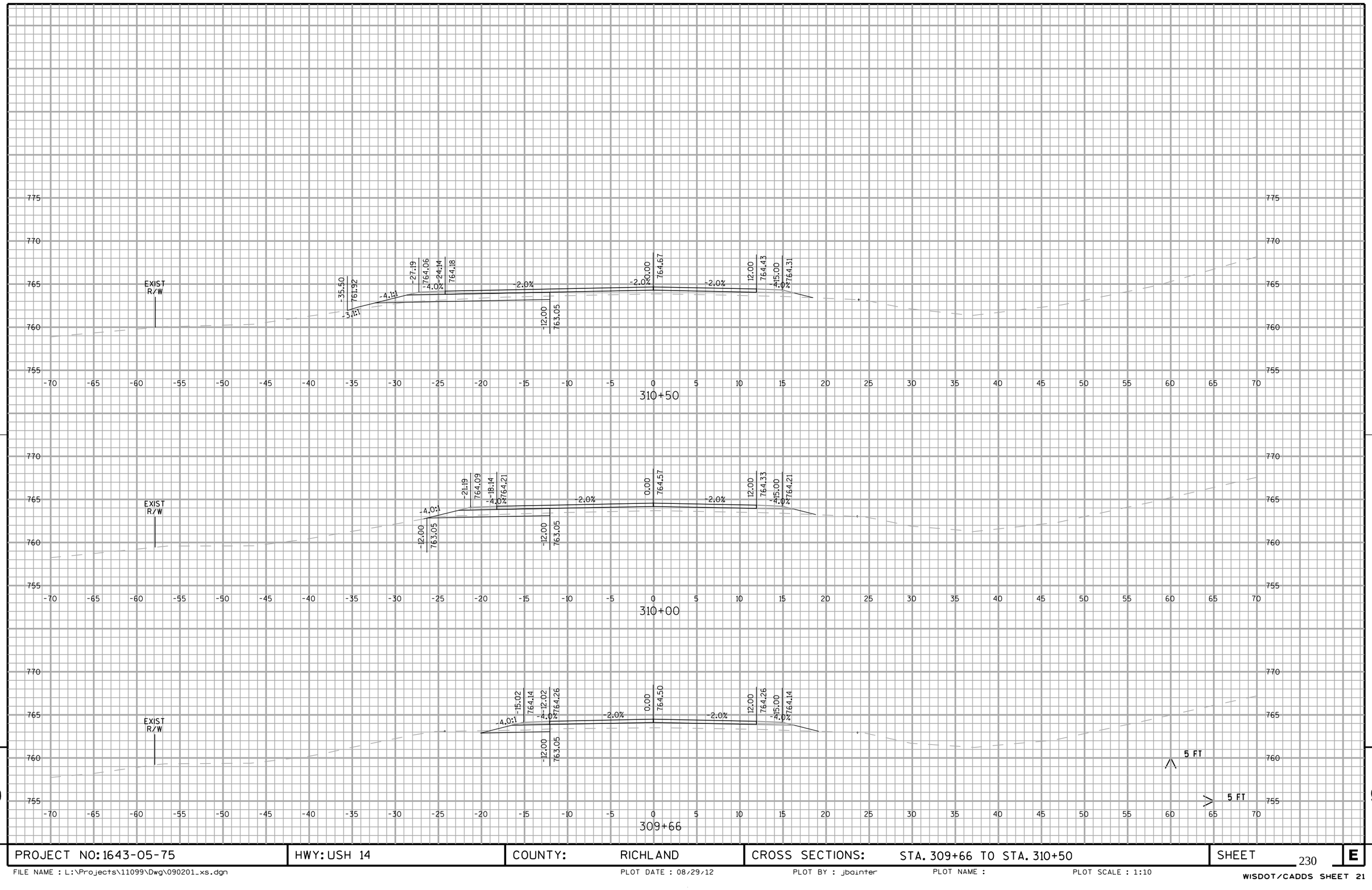

PROJECT NO: 1643-05-75	HWY: USH 14	COUNTY: RICHLAND	CROSS SECTIONS: STA. 309+66 TO STA. 310+50	SHEET 230 E

FILE NAME : L:\Projects\11099\Dwg\090201_xs.dgn PLOT DATE : 08/29/12 PLOT BY : jbainter PLOT NAME : PLOT SCALE : 1:10

WISDOT/CADDS SHEET 21

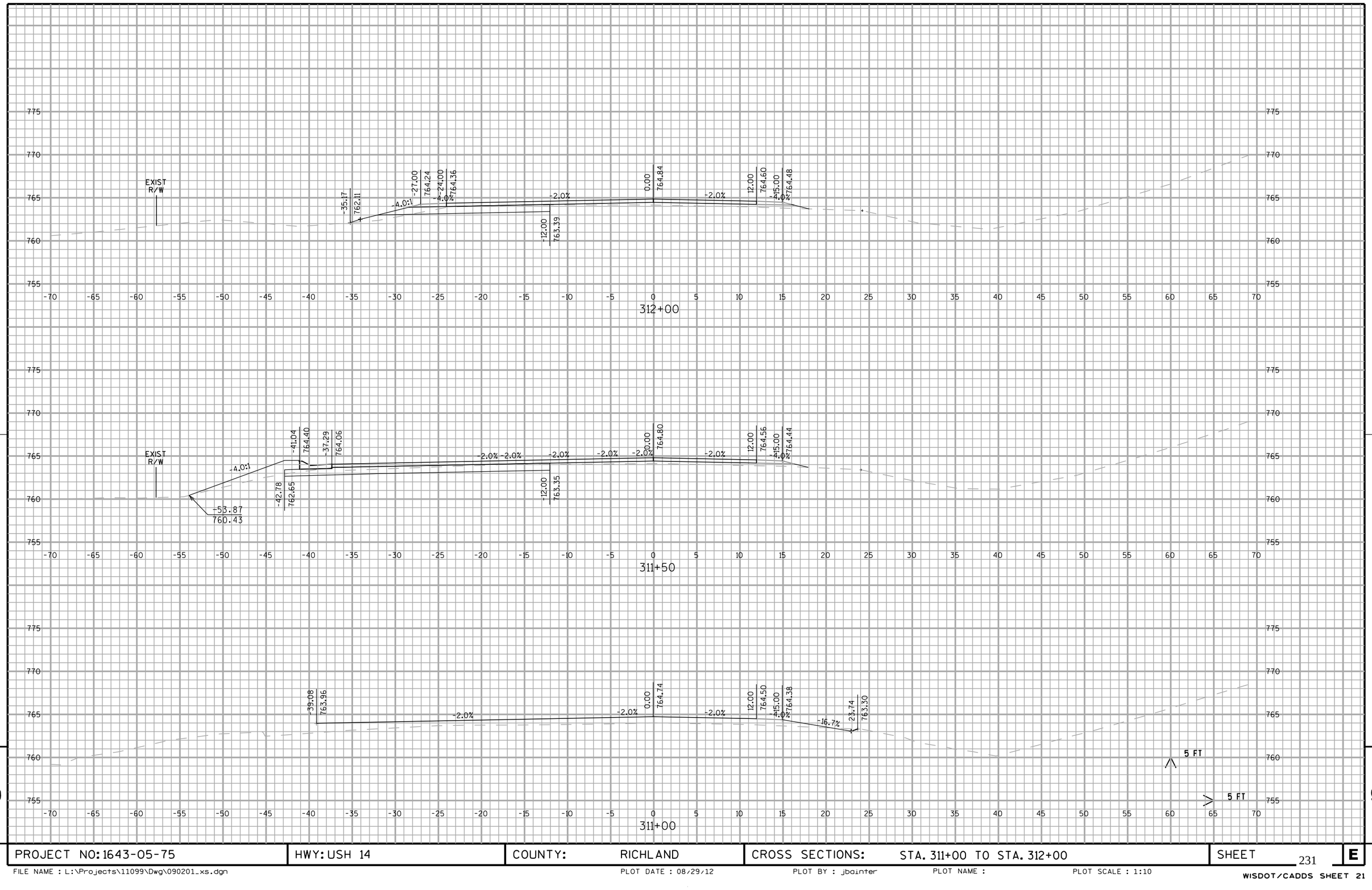

PROJECT NO: 1643-05-75	HWY: USH 14	COUNTY: RICHLAND	CROSS SECTIONS: STA. 311+00 TO STA. 312+00	SHEET 231 E

FILE NAME : L:\Projects\11099\Dwg\090201_xs.dgn PLOT DATE : 08/29/12 PLOT BY : jbainter PLOT NAME : PLOT SCALE : 1:10

WISDOT/CADDS SHEET 21

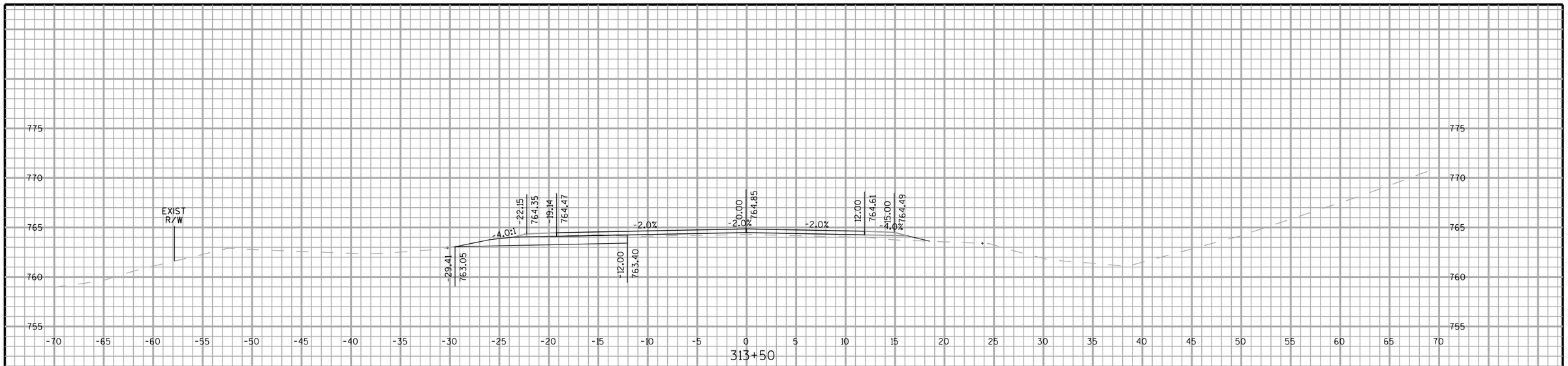

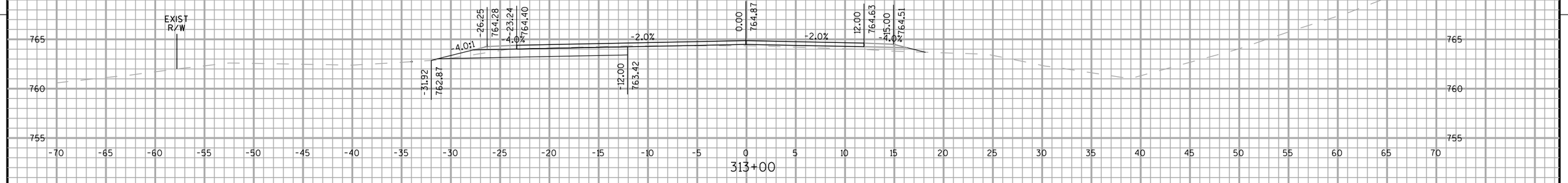

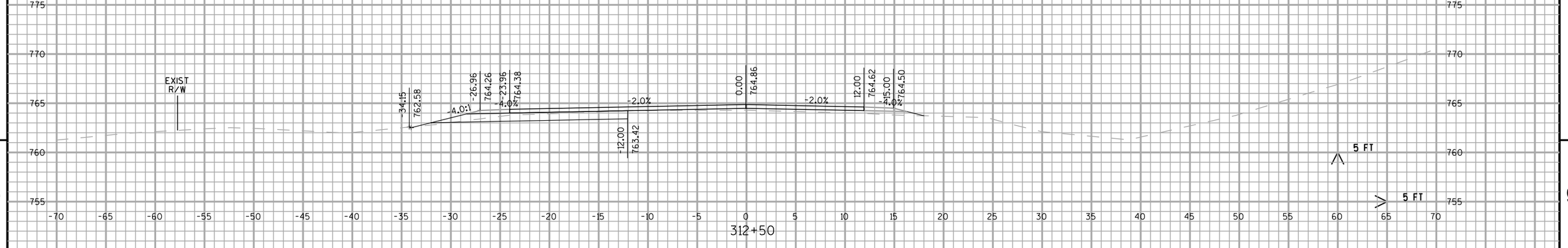

PROJECT NO: 1643-05-75	HWY: USH 14	COUNTY: RICHLAND	CROSS SECTIONS: STA. 312+50 TO STA. 313+50	SHEET 232 E

FILE NAME : L:\Projects\11099\Dwg\090201_xs.dgn PLOT DATE : 08/29/12 PLOT BY : jbainter PLOT NAME : PLOT SCALE : 1:10

WISDOT/CADDS SHEET 21

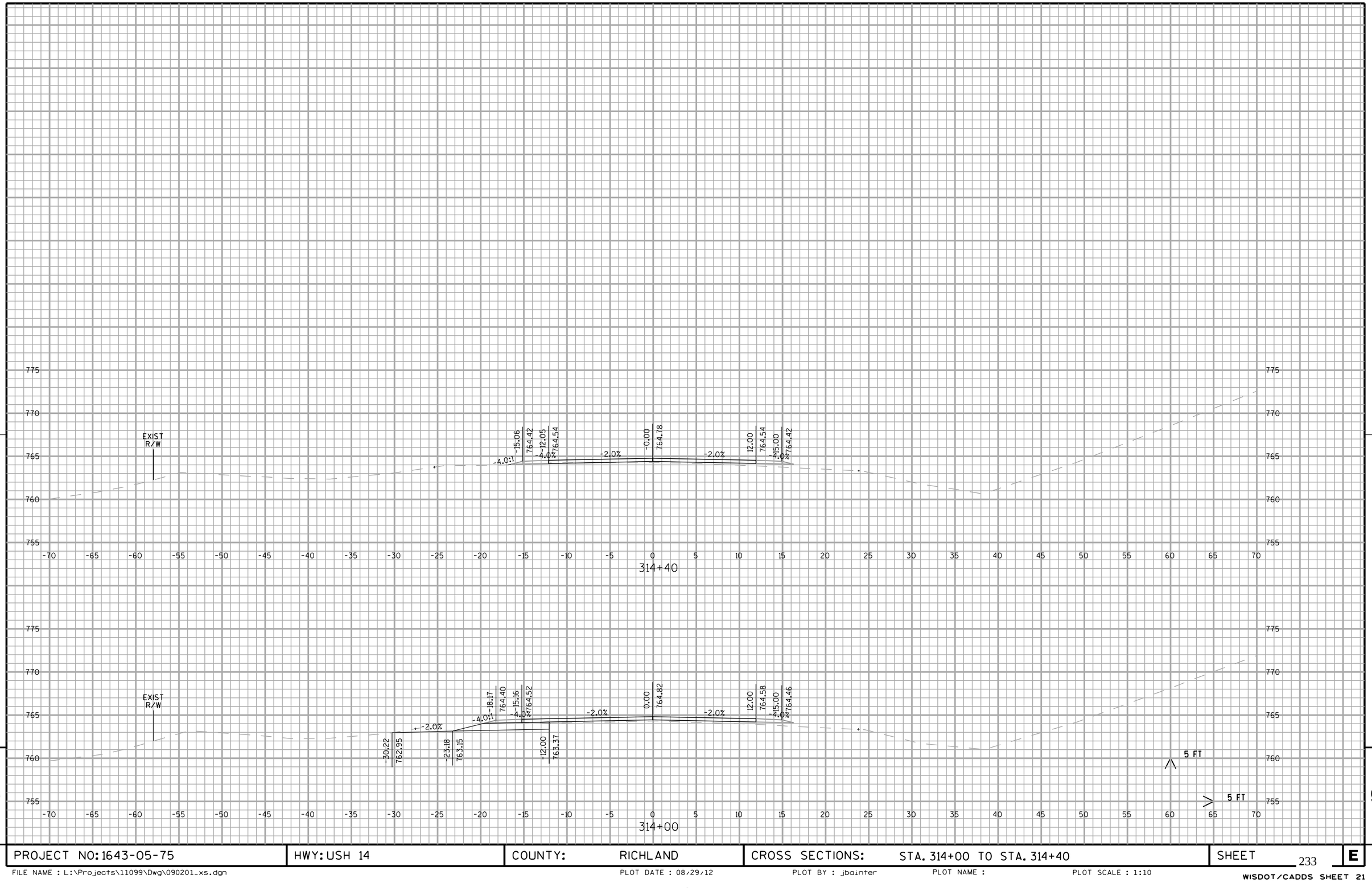

9

9

PROJECT NO: 1643-05-75	HWY: USH 14	COUNTY: RICHLAND	CROSS SECTIONS: STA. 314+00 TO STA. 314+40	SHEET 233	E

FILE NAME : L:\Projects\11099\Dwg\090201_xs.dgn PLOT DATE : 08/29/12 PLOT BY : jbainter PLOT NAME : PLOT SCALE : 1:10

WISDOT/CADDS SHEET 21

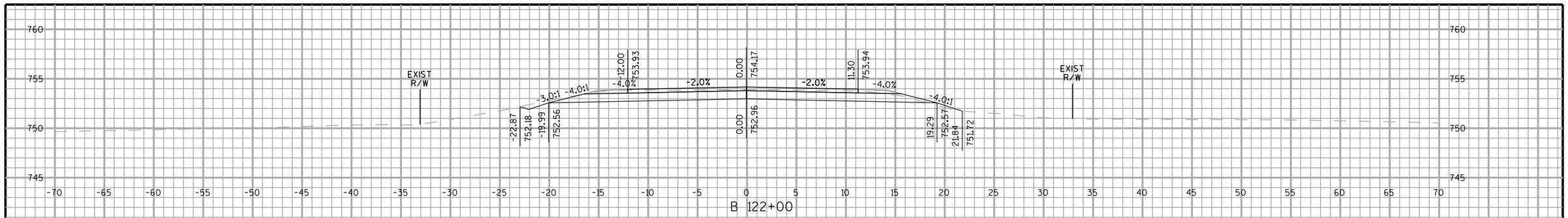

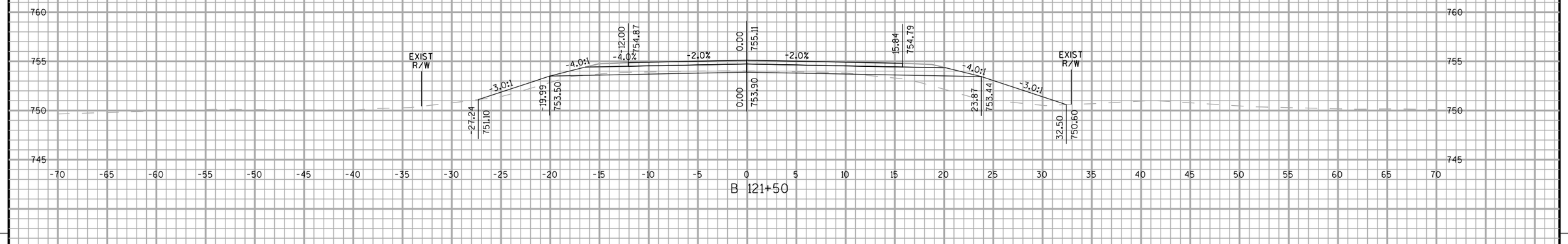

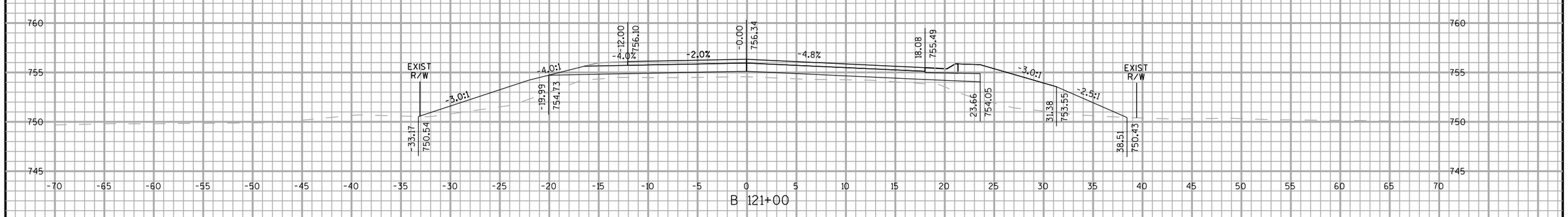

9

9

PROJECT NO: 1643-05-75	HWY: USH 14	COUNTY: RICHLAND	CROSS SECTIONS: STA. B 120+50 TO STA. B 122+00 CTH Z	SHEET 234 E

FILE NAME : l:\projects\11099\dwg\090202_xs.dgn PLOT DATE : 08/29/12 PLOT BY : jbainter PLOT NAME : PLOT SCALE : 1:10

WISDOT/CADDS SHEET 21

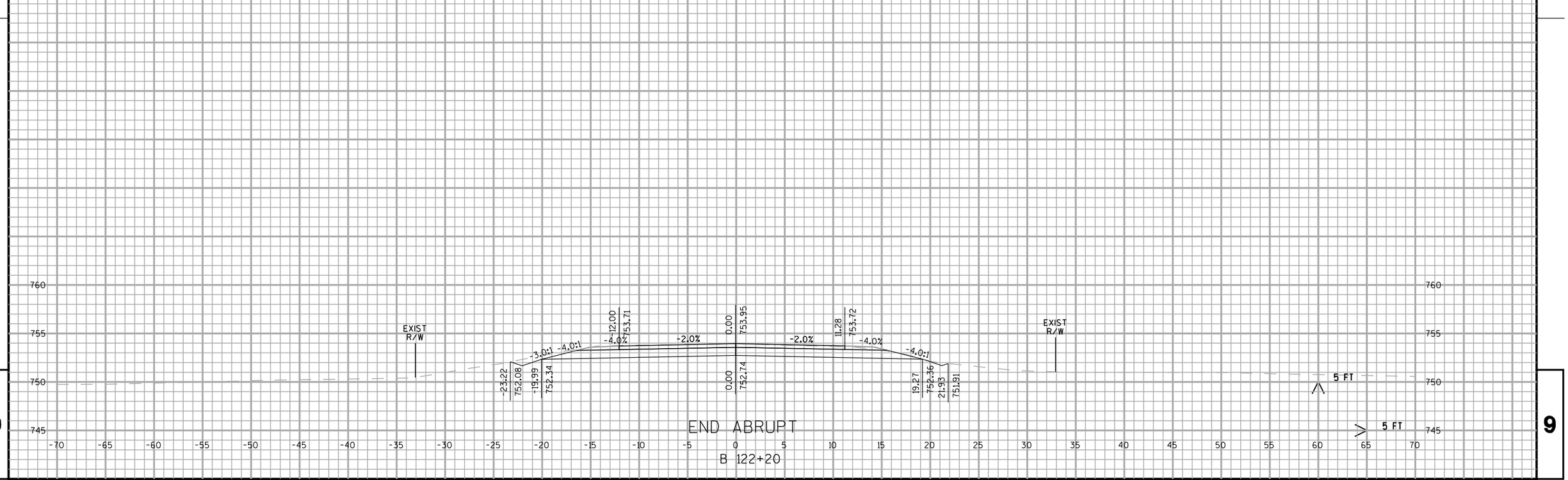

PROJECT NO: 1643-05-75	HWY: USH 14	COUNTY: RICHLAND	CROSS SECTIONS: STA. B 122+20 TO STA. B 122+20 CTH Z	SHEET 235 E

FILE NAME : l:\projects\11099\dwg\090202_xs.dgn | PLOT DATE : 08/29/12 | PLOT BY : jbainter | PLOT NAME : | PLOT SCALE : 1:10

WISDOT/CADDS SHEET 21

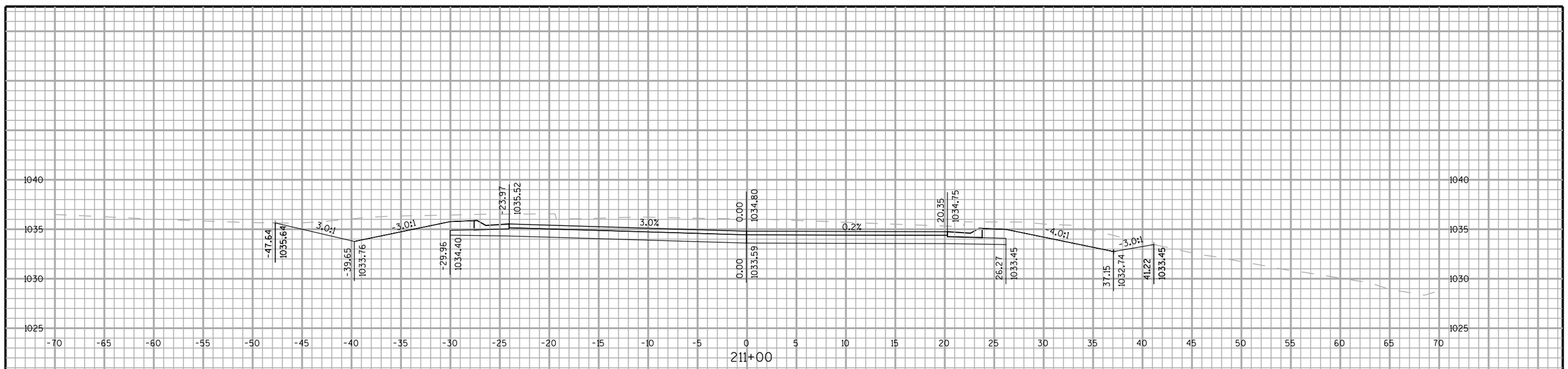

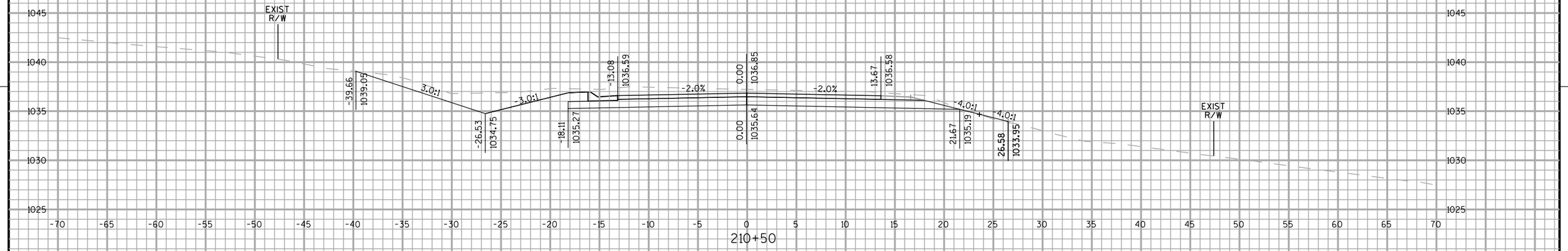

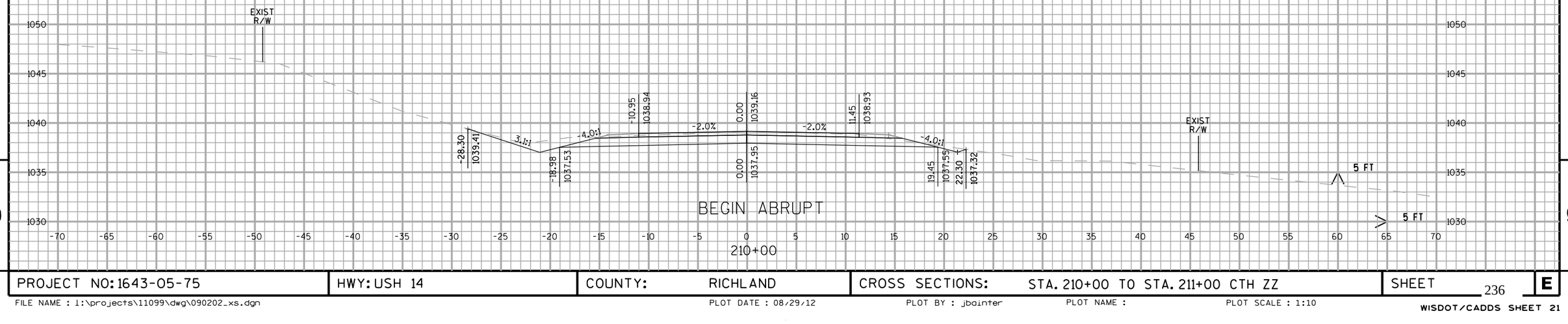

9

9

PROJECT NO: 1643-05-75	HWY: USH 14	COUNTY: RICHLAND	CROSS SECTIONS: STA. 210+00 TO STA. 211+00 CTH ZZ	SHEET E

FILE NAME : l:\projects\11099\dwg\090202_xs.dgn PLOT DATE : 08/29/12 PLOT BY : jbainter PLOT NAME : PLOT SCALE : 1:10

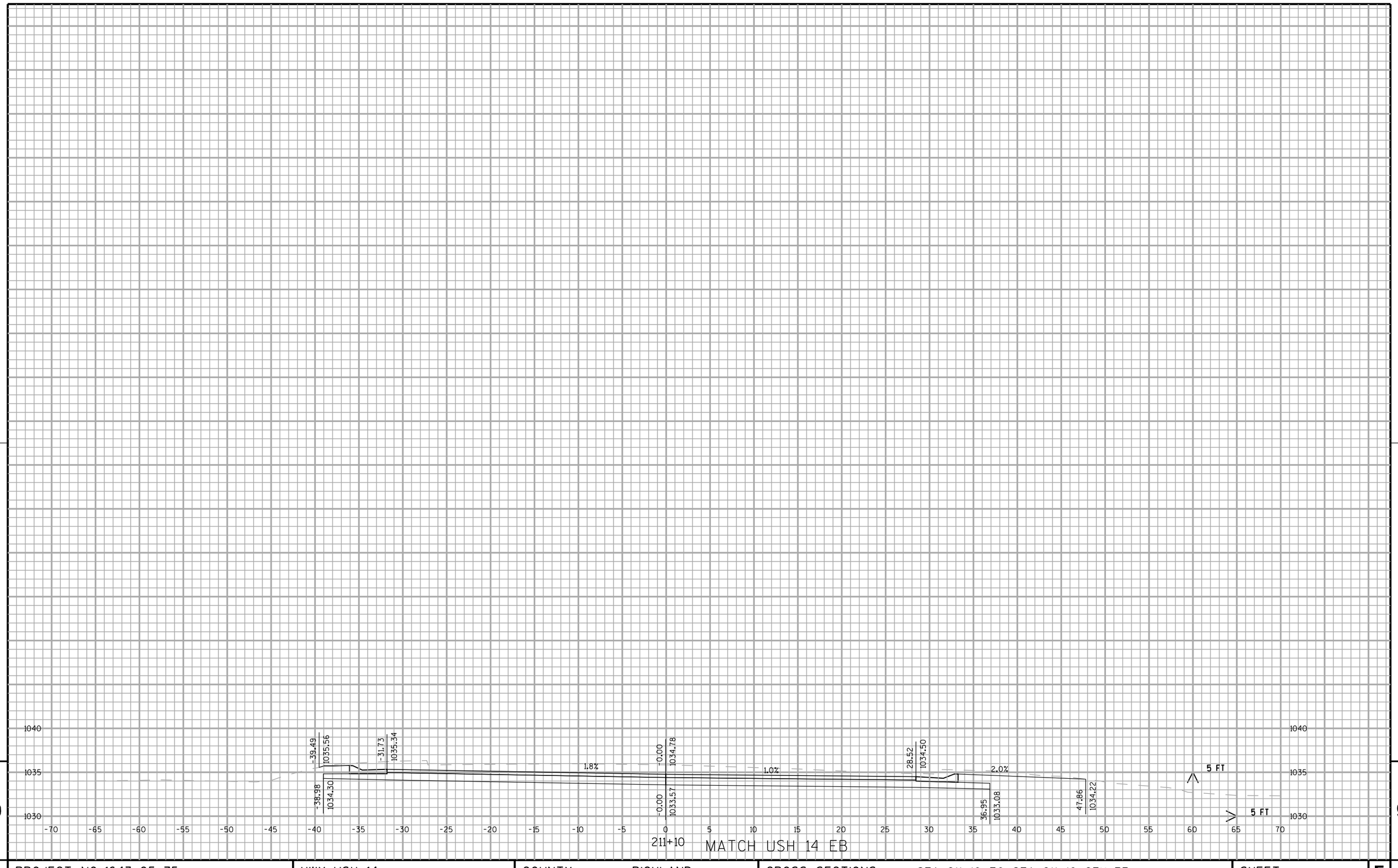

9

9

PROJECT NO: 1643-05-75	HWY: USH 14	COUNTY: RICHLAND	CROSS SECTIONS: STA. 211+10 TO STA. 211+10 CTH ZZ	SHEET 237 E

FILE NAME : l:\projects\11099\dwg\090202_xs.dgn PLOT DATE : 08/29/12 PLOT BY : jbainter PLOT NAME : PLOT SCALE : 1:10

WISDOT/CADDS SHEET 21

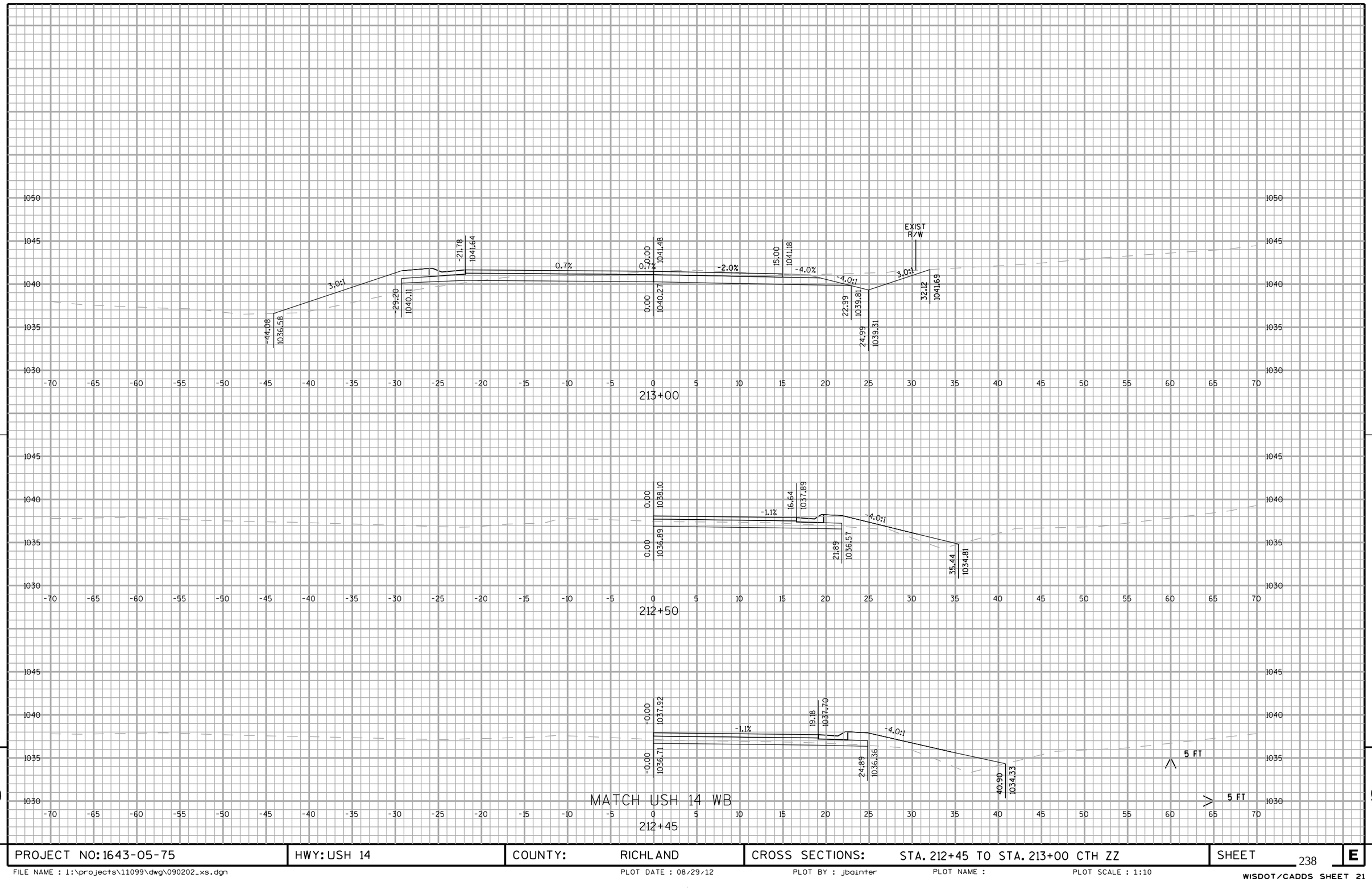

PROJECT NO: 1643-05-75	HWY: USH 14	COUNTY: RICHLAND	CROSS SECTIONS: STA. 212+45 TO STA. 213+00 CTH ZZ	SHEET 238 E

FILE NAME : l:\projects\11099\dwg\090202_xs.dgn PLOT DATE : 08/29/12 PLOT BY : jbainter PLOT NAME : PLOT SCALE : 1:10

WISDOT/CADDS SHEET 21

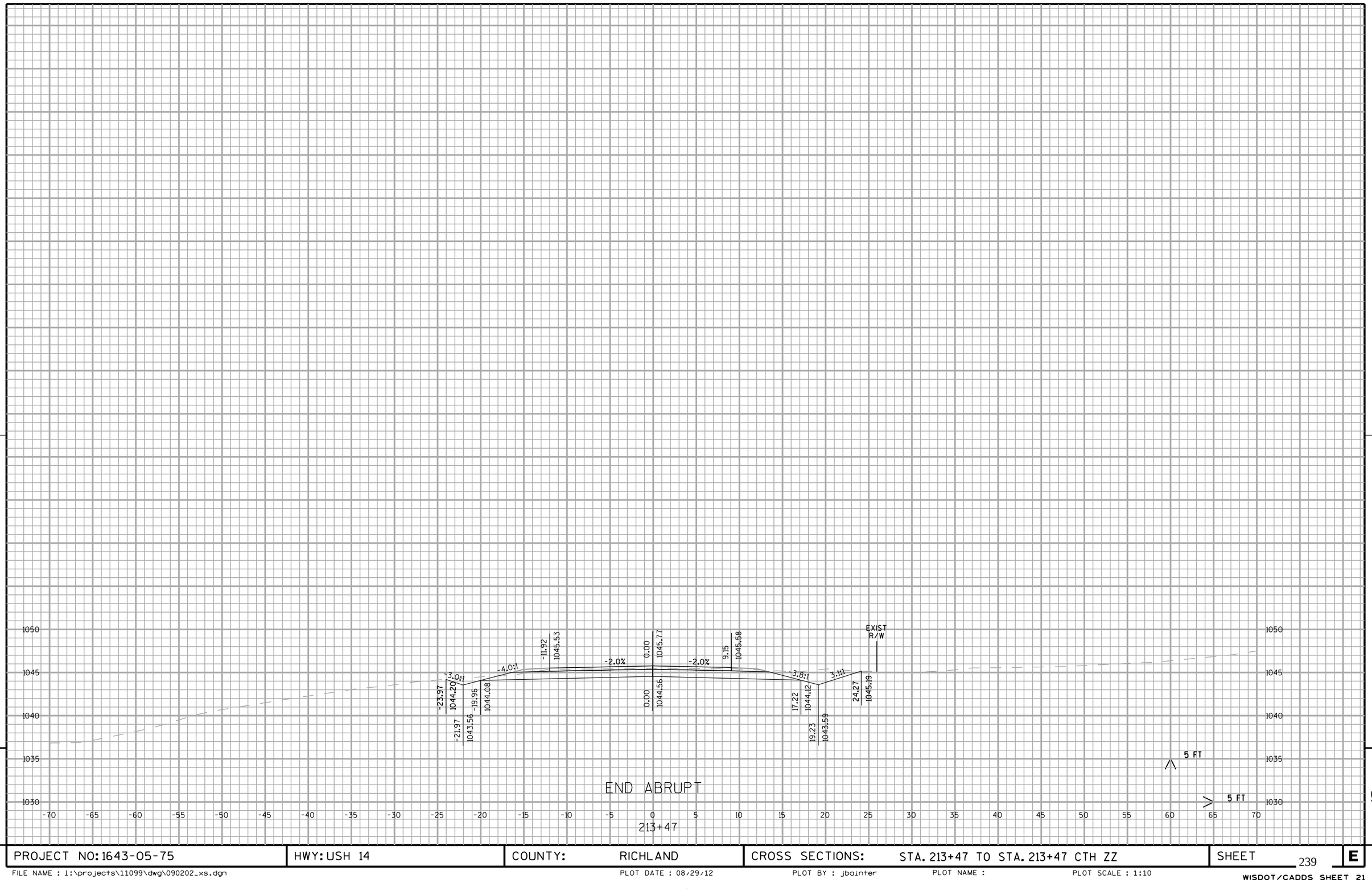

9

9

PROJECT NO: 1643-05-75	HWY: USH 14	COUNTY: RICHLAND	CROSS SECTIONS: STA. 213+47 TO STA. 213+47 CTH ZZ	SHEET 239 E

FILE NAME : l:\projects\11099\dwg\090202_xs.dgn PLOT DATE : 08/29/12 PLOT BY : jbainter PLOT NAME : PLOT SCALE : 1:10

WISDOT/CADDS SHEET 21

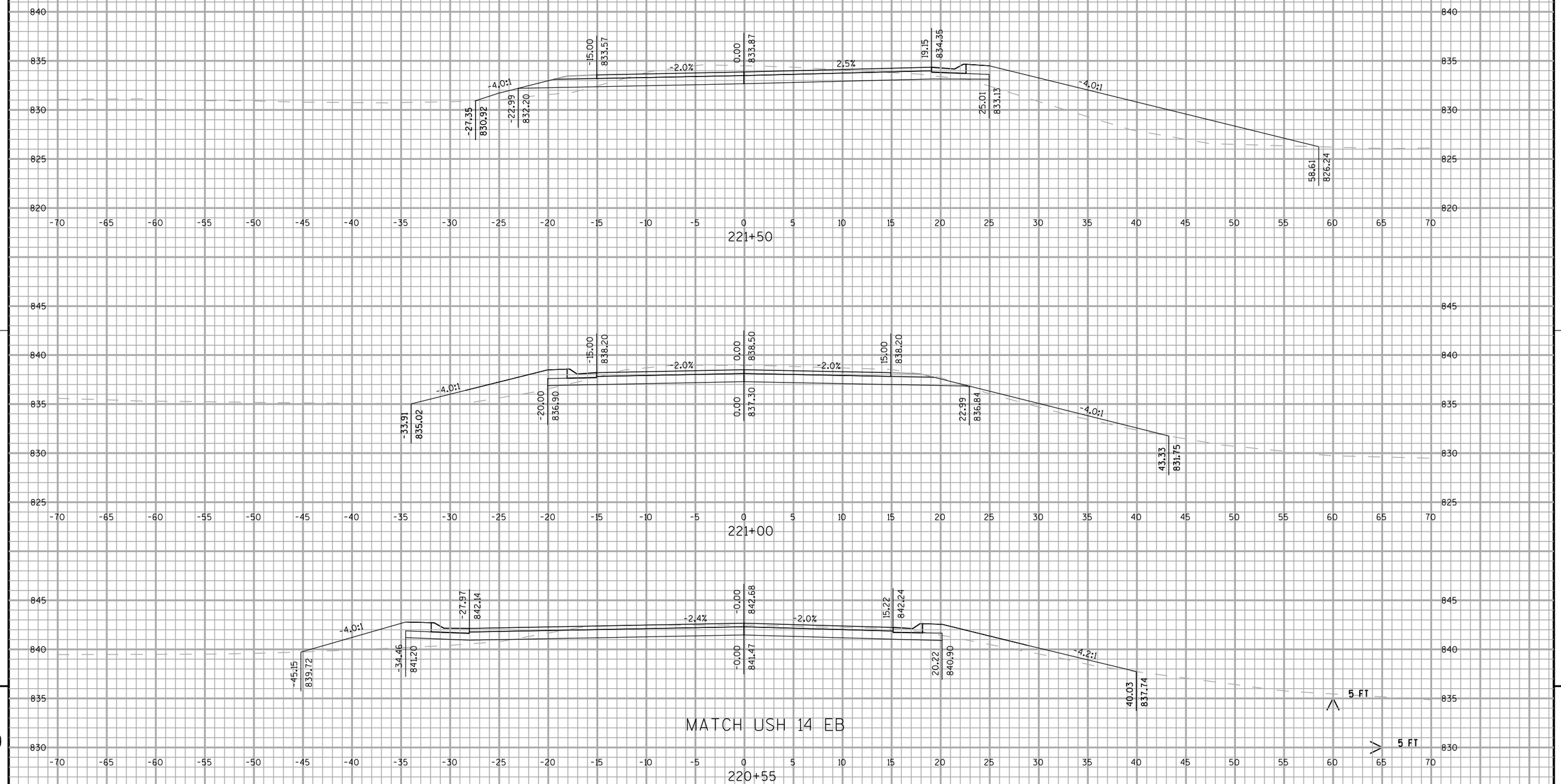

PROJECT NO: 1643-05-75	HWY: USH 14	COUNTY: RICHLAND	CROSS SECTIONS: STA. 220+55 TO STA. 221+50 TUCK-A-WAY	SHEET 240 E

FILE NAME : l:\projects\11099\dwg\090202_xs.dgn PLOT DATE : 08/29/12 PLOT BY : jbainter PLOT NAME : PLOT SCALE : 1:10

WISDOT/CADDS SHEET 21

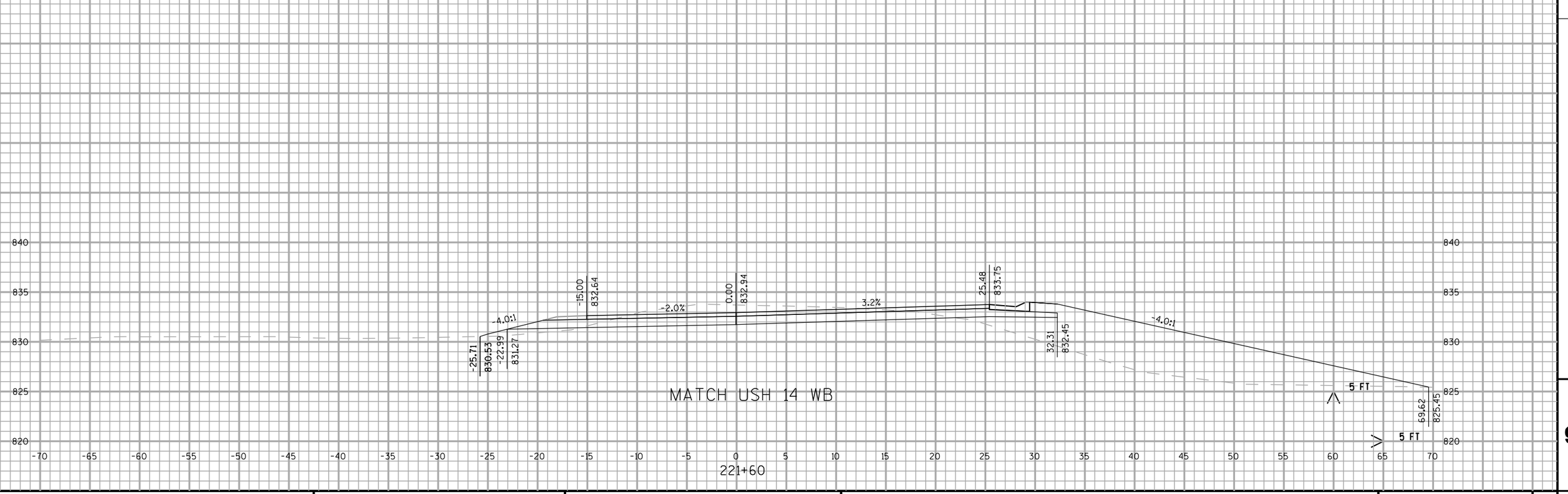

PROJECT NO: 1643-05-75	HWY: USH 14	COUNTY: RICHLAND	CROSS SECTIONS: STA. 221+60 TO STA. 221+60 TUCK-A-WAY	SHEET 241 E

FILE NAME : l:\projects\11099\dwg\090202_xs.dgn PLOT DATE : 08/29/12 PLOT BY : jbainter PLOT NAME : PLOT SCALE : 1:10

WISDOT/CADDS SHEET 21

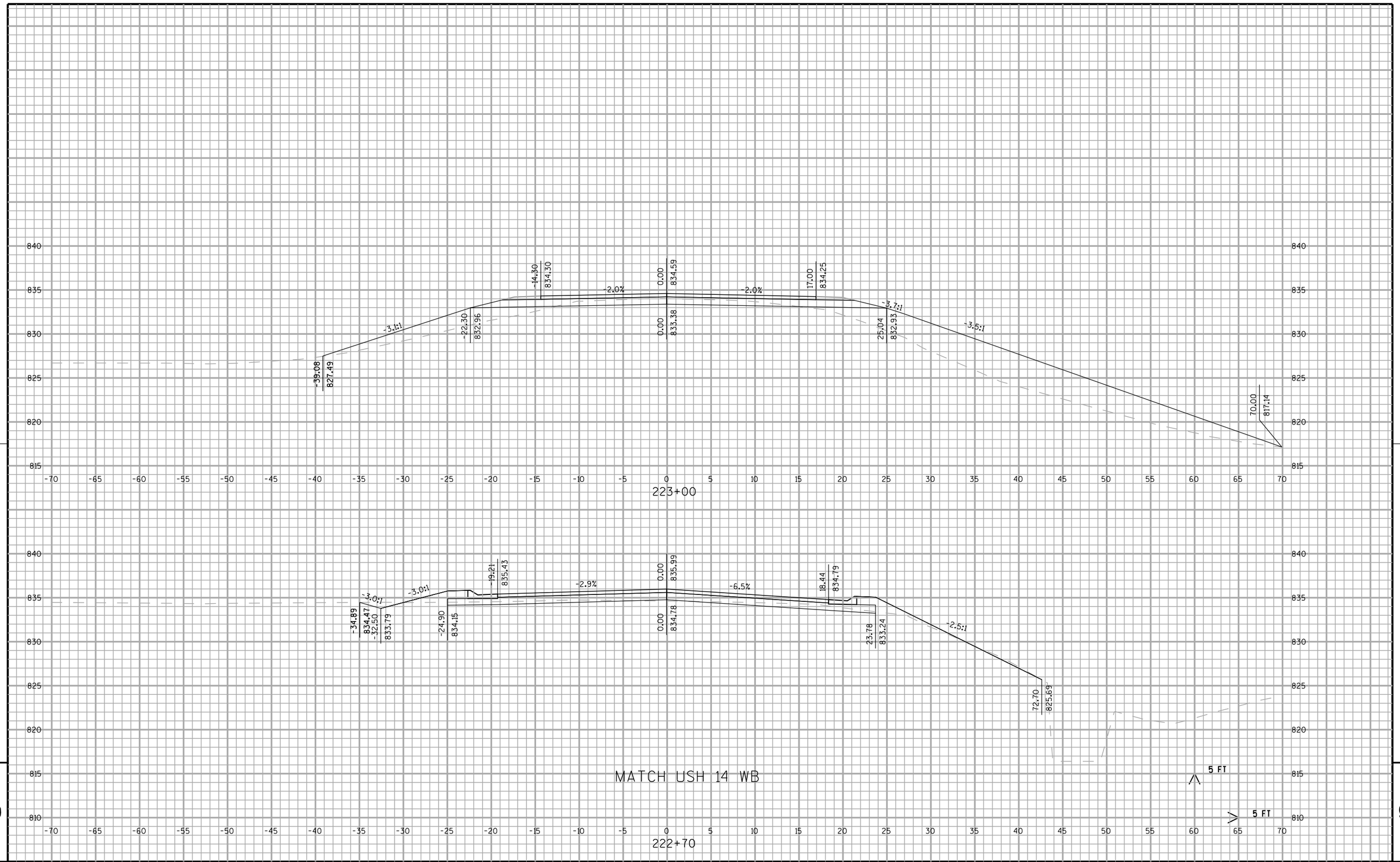

PROJECT NO: 1643-05-75	HWY: USH 14	COUNTY: RICHLAND	CROSS SECTIONS: STA. 222+70 TO STA. 223+00 TUCK-A-WAY	SHEET 242 E

FILE NAME : l:\projects\11099\dwg\090202_xs.dgn PLOT DATE : 08/29/12 PLOT BY : jbainter PLOT NAME : PLOT SCALE : 1:10

WISDOT/CADDS SHEET 21

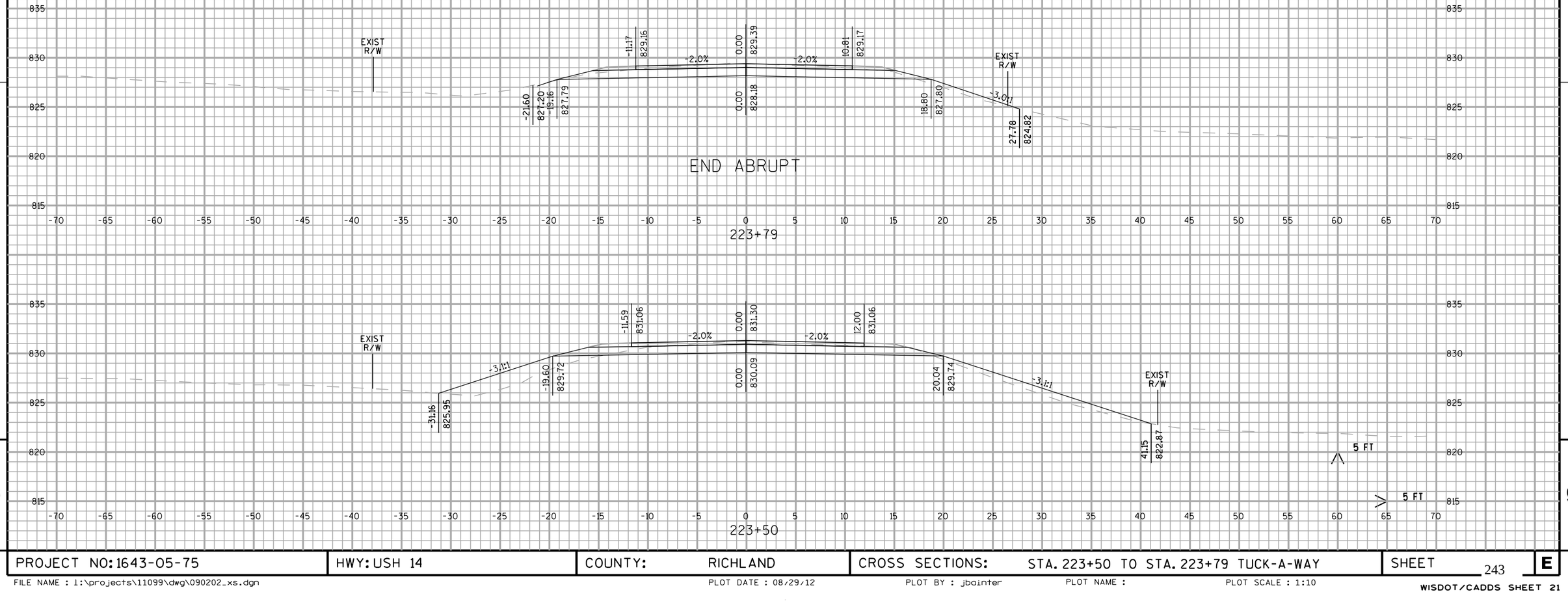

PROJECT NO: 1643-05-75	HWY: USH 14	COUNTY: RICHLAND	CROSS SECTIONS: STA. 223+50 TO STA. 223+79 TUCK-A-WAY	SHEET 243 E

FILE NAME : l:\projects\11099\dwg\090202_xs.dgn | PLOT DATE : 08/29/12 | PLOT BY : jbainter | PLOT NAME : | PLOT SCALE : 1:10

WISDOT/CADDS SHEET 21

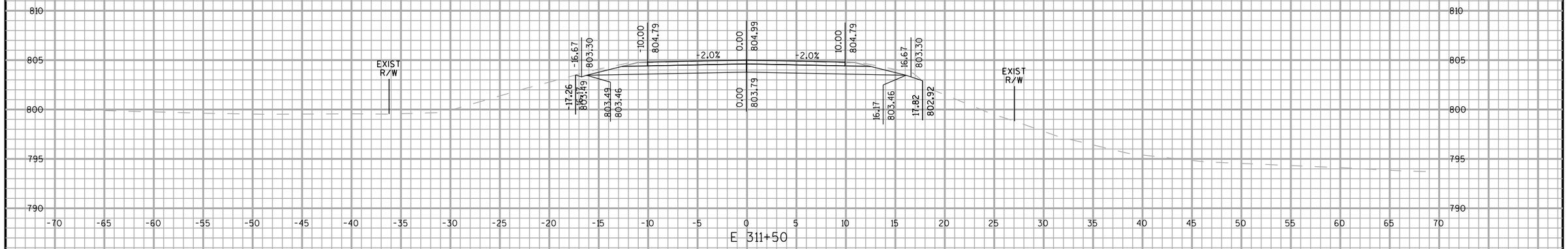

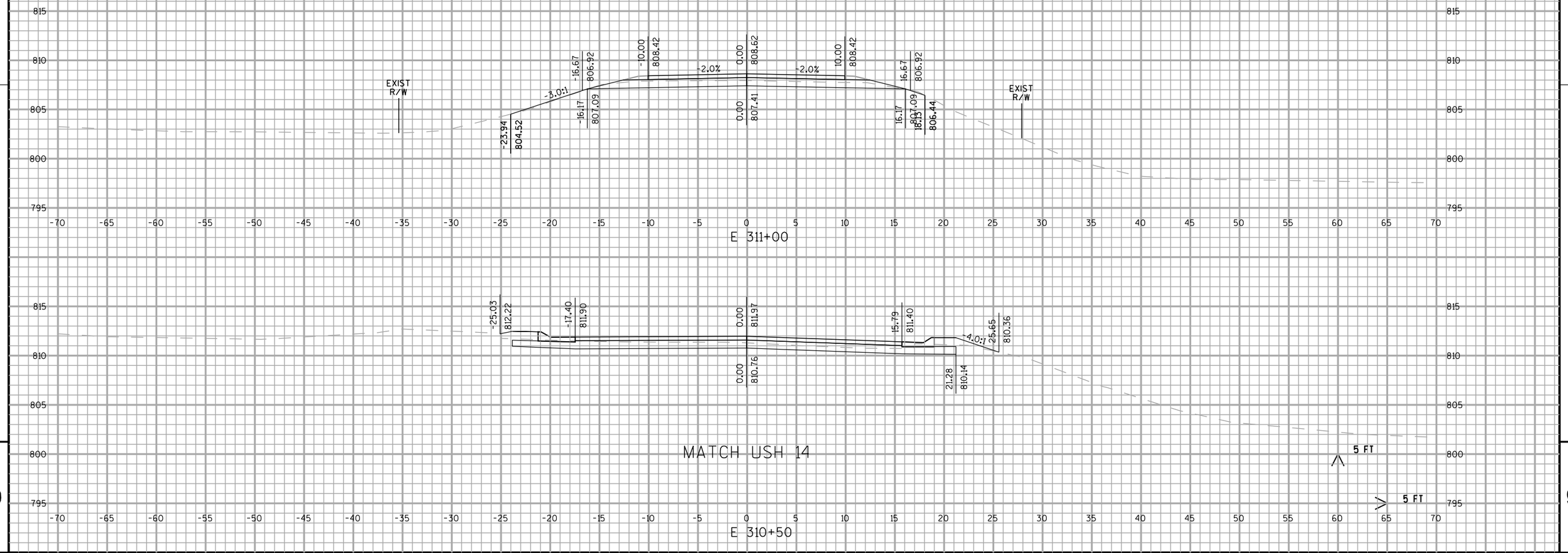

9

9

PROJECT NO: 1643-05-75	HWY: USH 14	COUNTY: RICHLAND	CROSS SECTIONS: STA. E 310+50 TO STA. E 311+50 BUCKHORN	SHEET 244	E

FILE NAME : l:\projects\11099\dwg\090202_xs.dgn PLOT DATE : 08/29/12 PLOT BY : jbainter PLOT NAME : PLOT SCALE : 1:10

WISDOT/CADDS SHEET 21

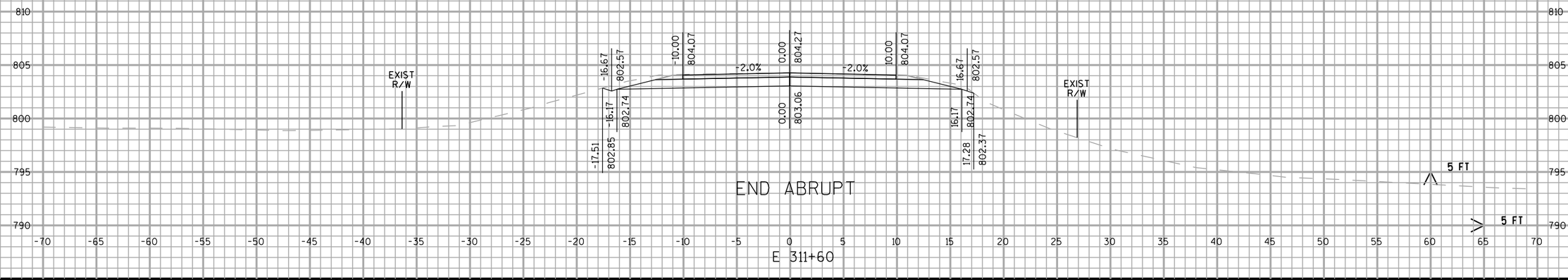

END ABRUPT

9

9

PROJECT NO: 1643-05-75	HWY: USH 14	COUNTY: RICHLAND	CROSS SECTIONS: STA. E 311+60 TO STA. E 311+60 BUCKHORN	SHEET 245 E

FILE NAME : l:\projects\11099\dwg\090202_xs.dgn PLOT DATE : 08/29/12 PLOT BY : jbainter PLOT NAME : PLOT SCALE : 1:10

WISDOT/CADDS SHEET 21

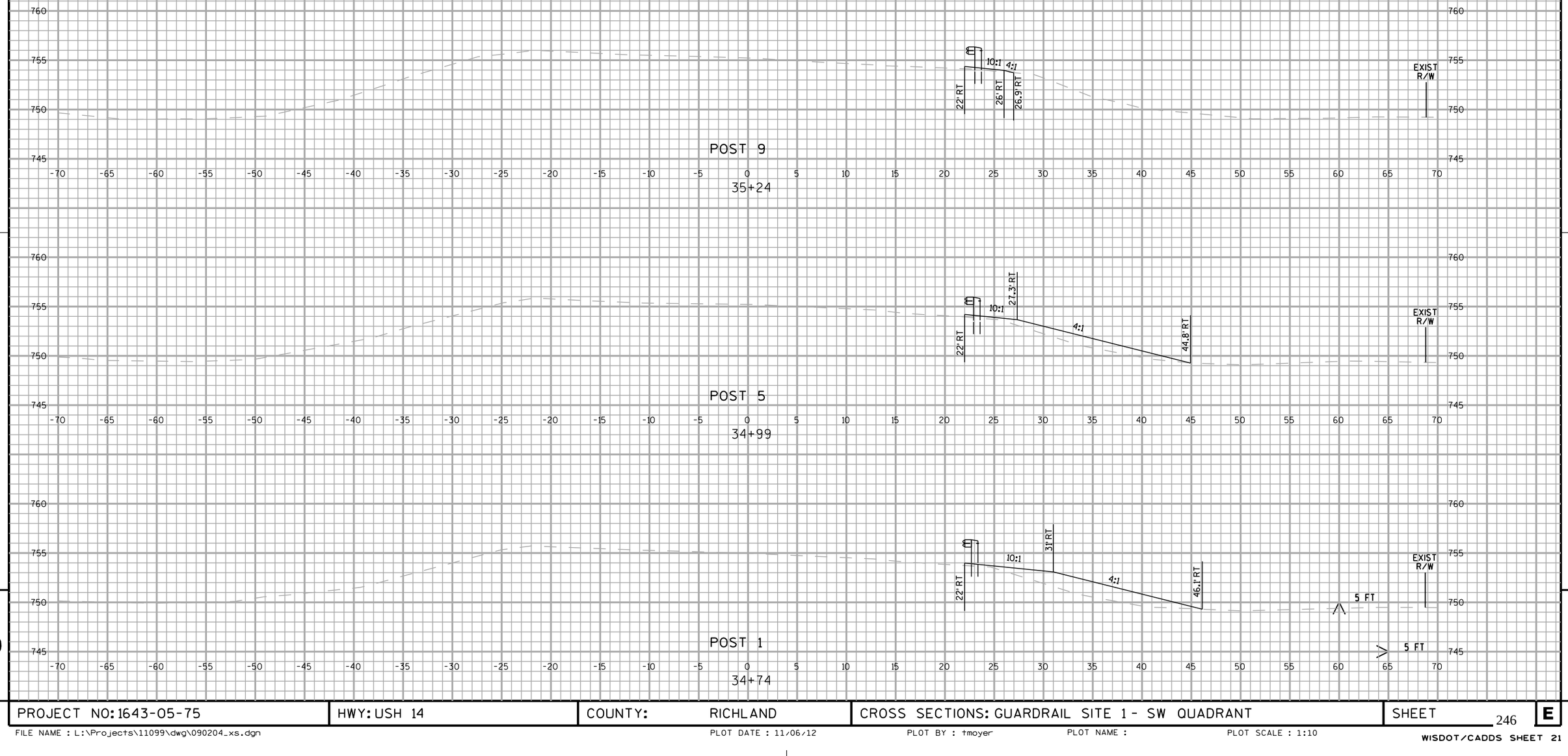

9

9

PROJECT NO: 1643-05-75	HWY: USH 14	COUNTY: RICHLAND	CROSS SECTIONS: GUARDRAIL SITE 1 - SW QUADRANT	SHEET 246 E

FILE NAME : L:\Projects\11099\dwg\090204_xs.dgn PLOT DATE : 11/06/12 PLOT BY : tmoyer PLOT NAME : PLOT SCALE : 1:10

WISDOT/CADDS SHEET 21

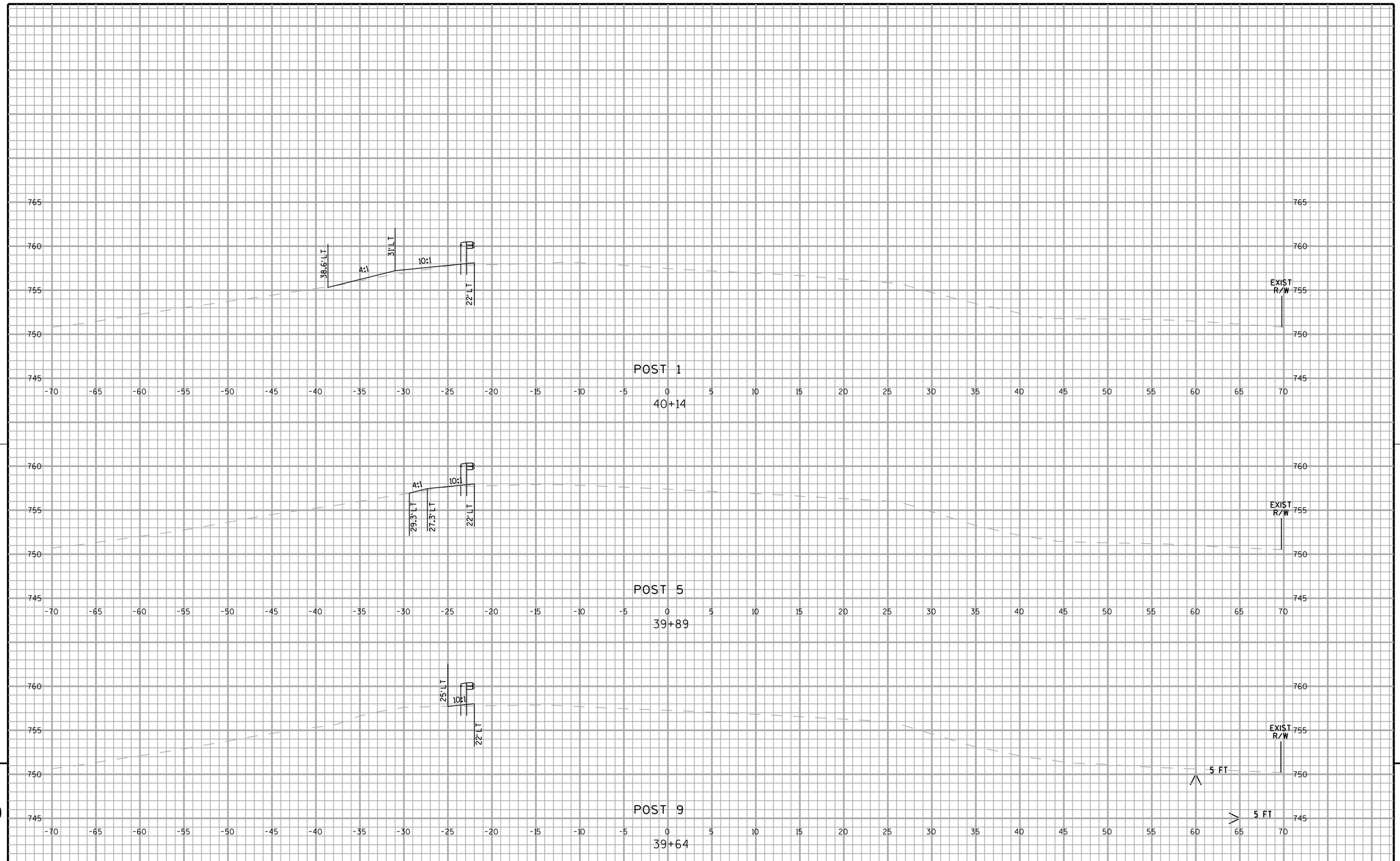

9

9

PROJECT NO: 1643-05-75	HWY: USH 14	COUNTY: RICHLAND	CROSS SECTIONS: GUARDRAIL SITE 1 - SE QUADRANT	SHEET 247	E

FILE NAME : L:\Projects\11099\dwg\090204_xs.dgn PLOT DATE : 11/06/12 PLOT BY : tmoyer PLOT NAME : PLOT SCALE : 1:10

WISDOT/CADDS SHEET 21

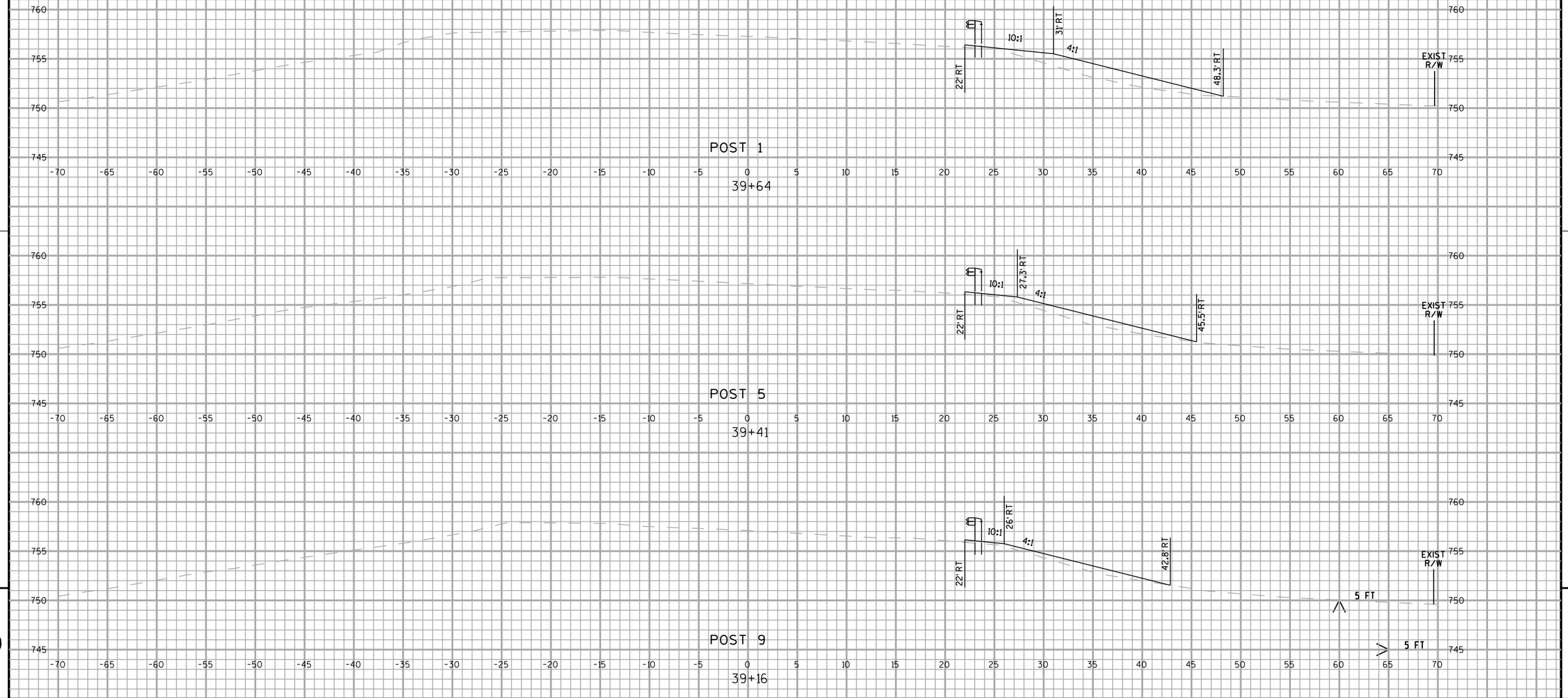

9

9

PROJECT NO: 1643-05-75	HWY: USH 14	COUNTY: RICHLAND	CROSS SECTIONS: GUARDRAIL SITE 1 - NE QUADRANT	SHEET 248	E

FILE NAME : L:\Projects\11099\dwg\090204_xs.dgn PLOT DATE : 11/06/12 PLOT BY : tmoyer PLOT NAME : PLOT SCALE : 1:10

WISDOT/CADDS SHEET 21

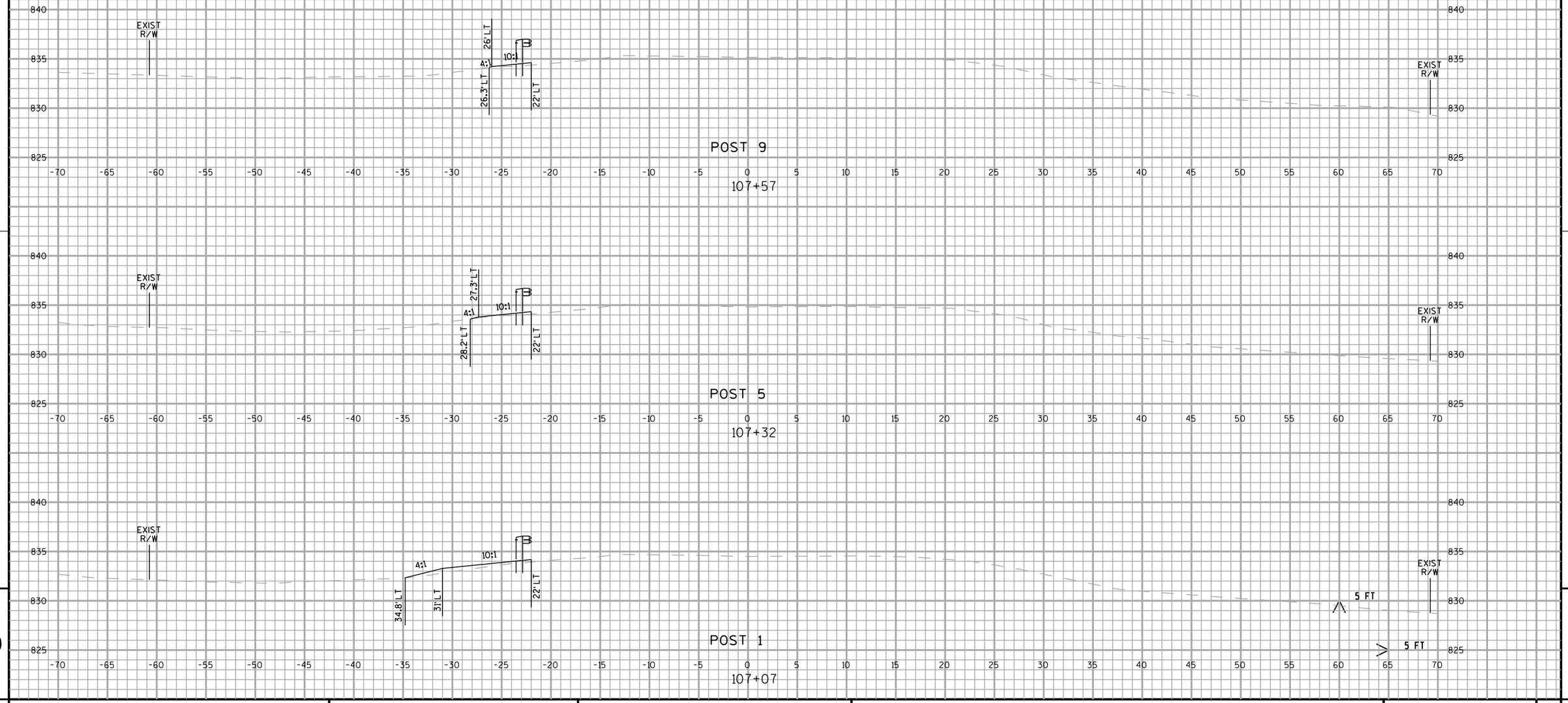

9

9

PROJECT NO: 1643-05-75	HWY: USH 14	COUNTY: RICHLAND	CROSS SECTIONS: GUARDRAIL SITE 3 - NW QUADRANT	SHEET 249 E

FILE NAME : L:\Projects\11099\dwg\090204_xs.dgn PLOT DATE : 11/06/12 PLOT BY : tmoyer PLOT NAME : PLOT SCALE : 1:10

WISDOT/CADDS SHEET 21

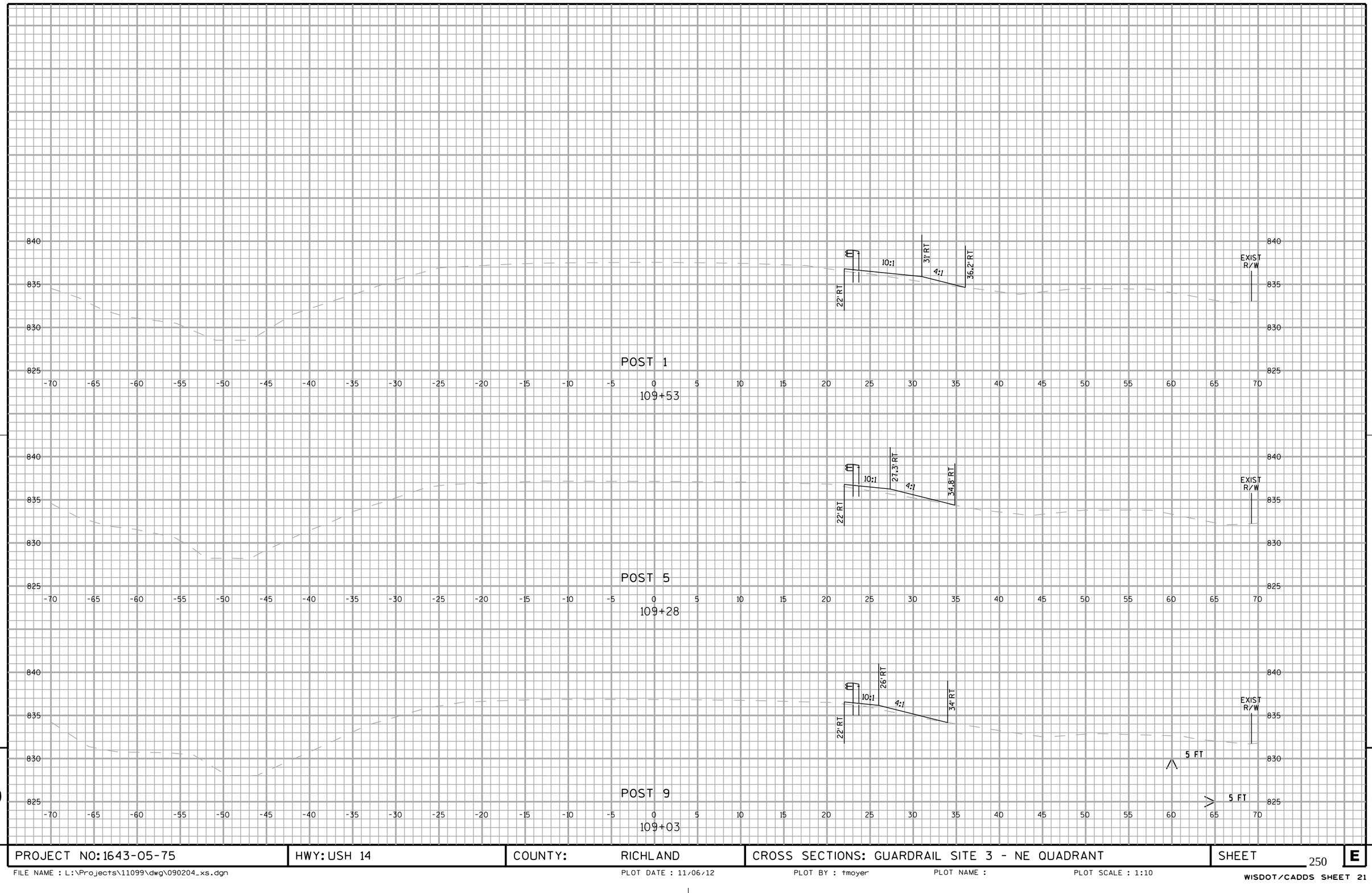

9

9

PROJECT NO: 1643-05-75	HWY: USH 14	COUNTY: RICHLAND	CROSS SECTIONS: GUARDRAIL SITE 3 - NE QUADRANT	SHEET 250	E

FILE NAME : L:\Projects\11099\dwg\090204_xs.dgn PLOT DATE : 11/06/12 PLOT BY : tmoyer PLOT NAME : PLOT SCALE : 1:10

WISDOT/CADDS SHEET 21

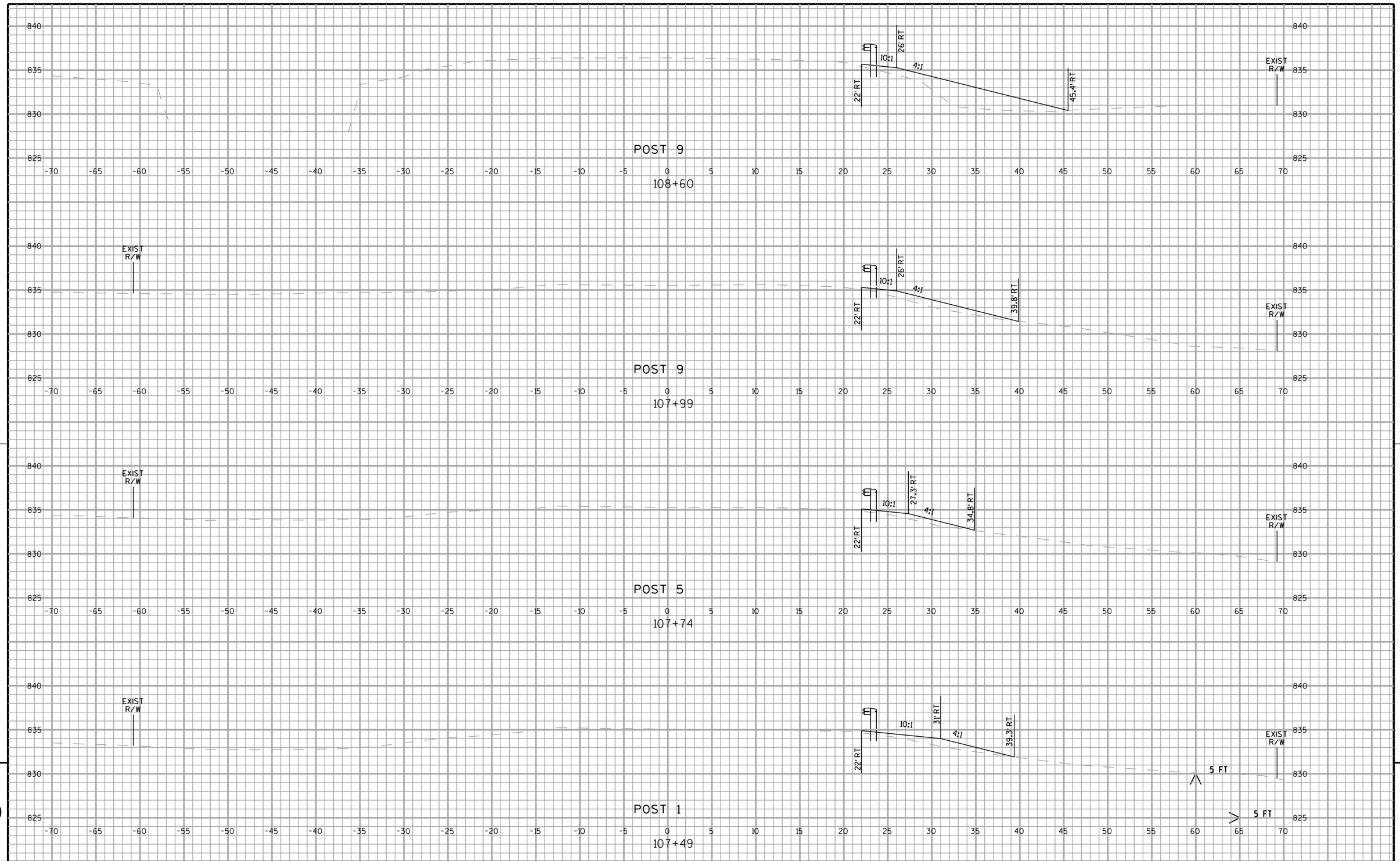

9

9

PROJECT NO: 1643-05-75	HWY: USH 14	COUNTY: RICHLAND	CROSS SECTIONS: GUARDRAIL SITE 3 - SOUTH SIDE	SHEET 251 E

FILE NAME : L:\Projects\11099\dwg\090204_xs.dgn PLOT DATE : 11/06/12 PLOT BY : tmoyer PLOT NAME : PLOT SCALE : 1:10

WISDOT/CADDS SHEET 21

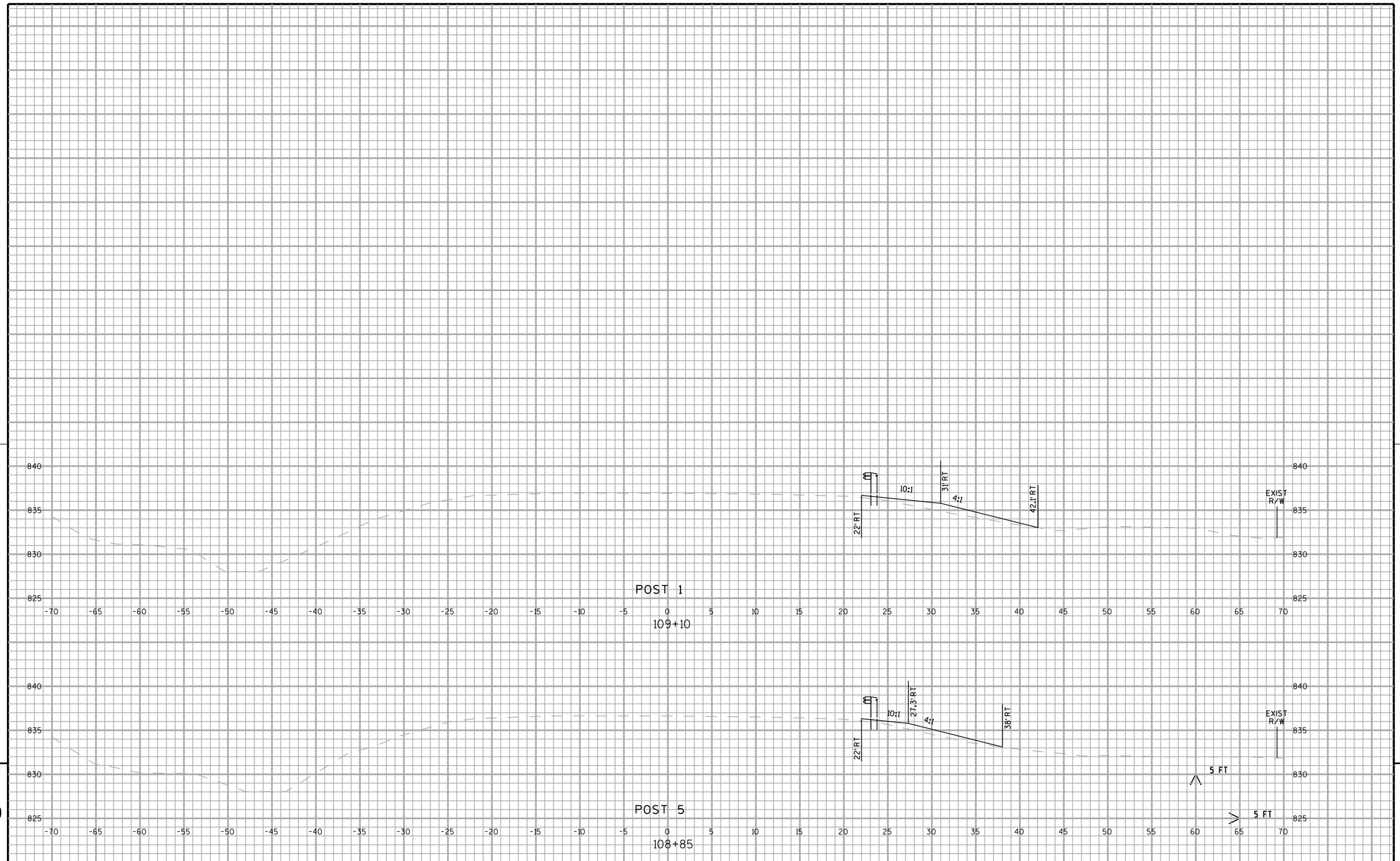

9

9

PROJECT NO: 1643-05-75	HWY: USH 14	COUNTY: RICHLAND	CROSS SECTIONS: GUARDRAIL SITE 3 - SOUTH SIDE	SHEET 252	E

FILE NAME : L:\Projects\11099\dwg\090204_xs.dgn PLOT DATE : 11/06/12 PLOT BY : tmoyer PLOT NAME : PLOT SCALE : 1:10

WISDOT/CADDS SHEET 21

9

9

PROJECT NO: 1643-05-75	HWY: USH 14	COUNTY: RICHLAND	CROSS SECTIONS: GUARDRAIL SITE 4 - NORTH SIDE	SHEET 253	E

FILE NAME : L:\Projects\11099\dwg\090204_xs.dgn PLOT DATE : 11/06/12 PLOT BY : tmoyer PLOT NAME : PLOT SCALE : 1:10

WISDOT/CADDS SHEET 21

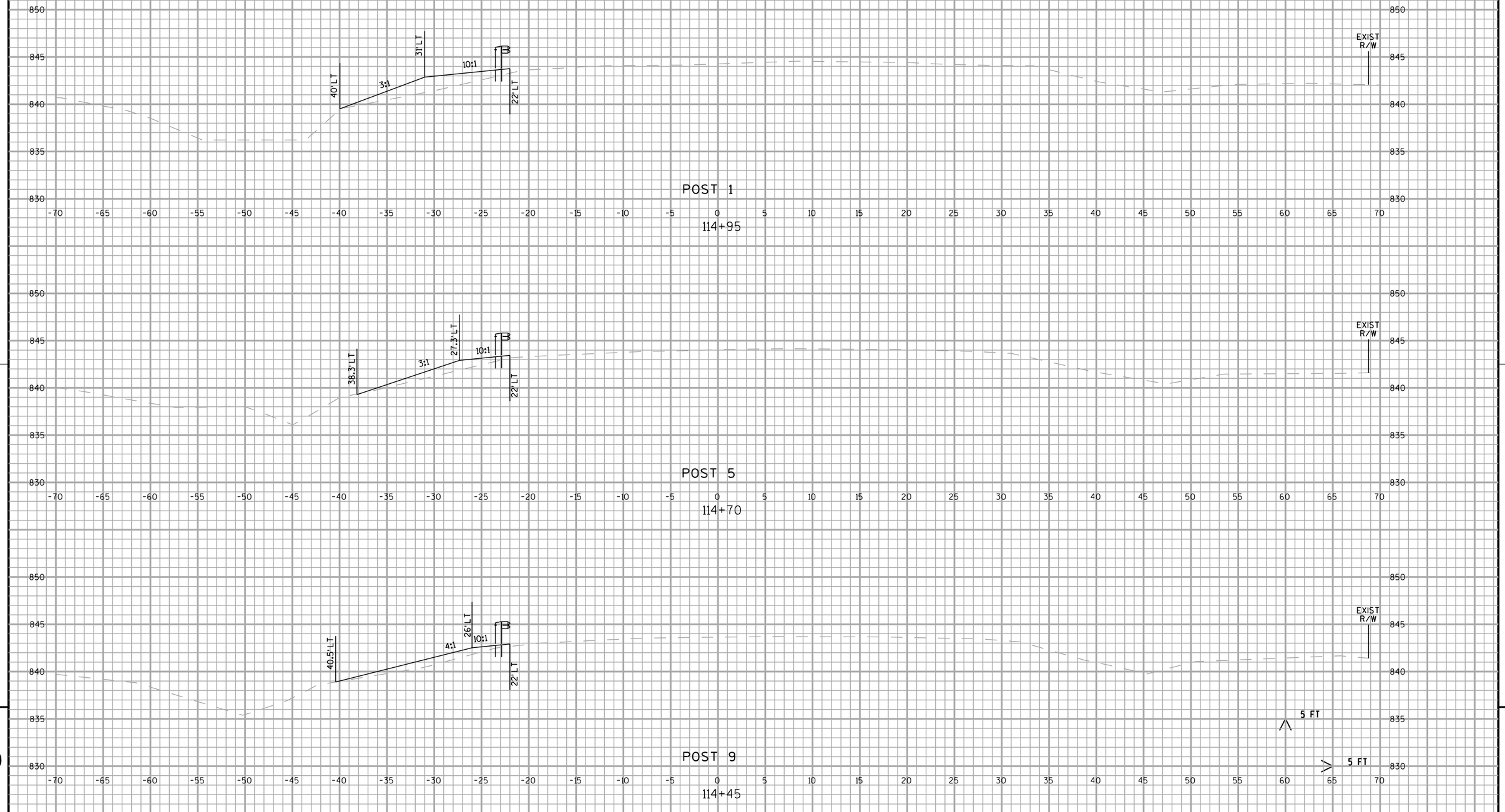

9

9

PROJECT NO: 1643-05-75	HWY: USH 14	COUNTY: RICHLAND	CROSS SECTIONS: GUARDRAIL SITE 4 - NORTH SIDE	SHEET 254	E

FILE NAME : L:\Projects\11099\dwg\090204_xs.dgn PLOT DATE : 11/06/12 PLOT BY : tmoyer PLOT NAME : PLOT SCALE : 1:10

WISDOT/CADDS SHEET 21

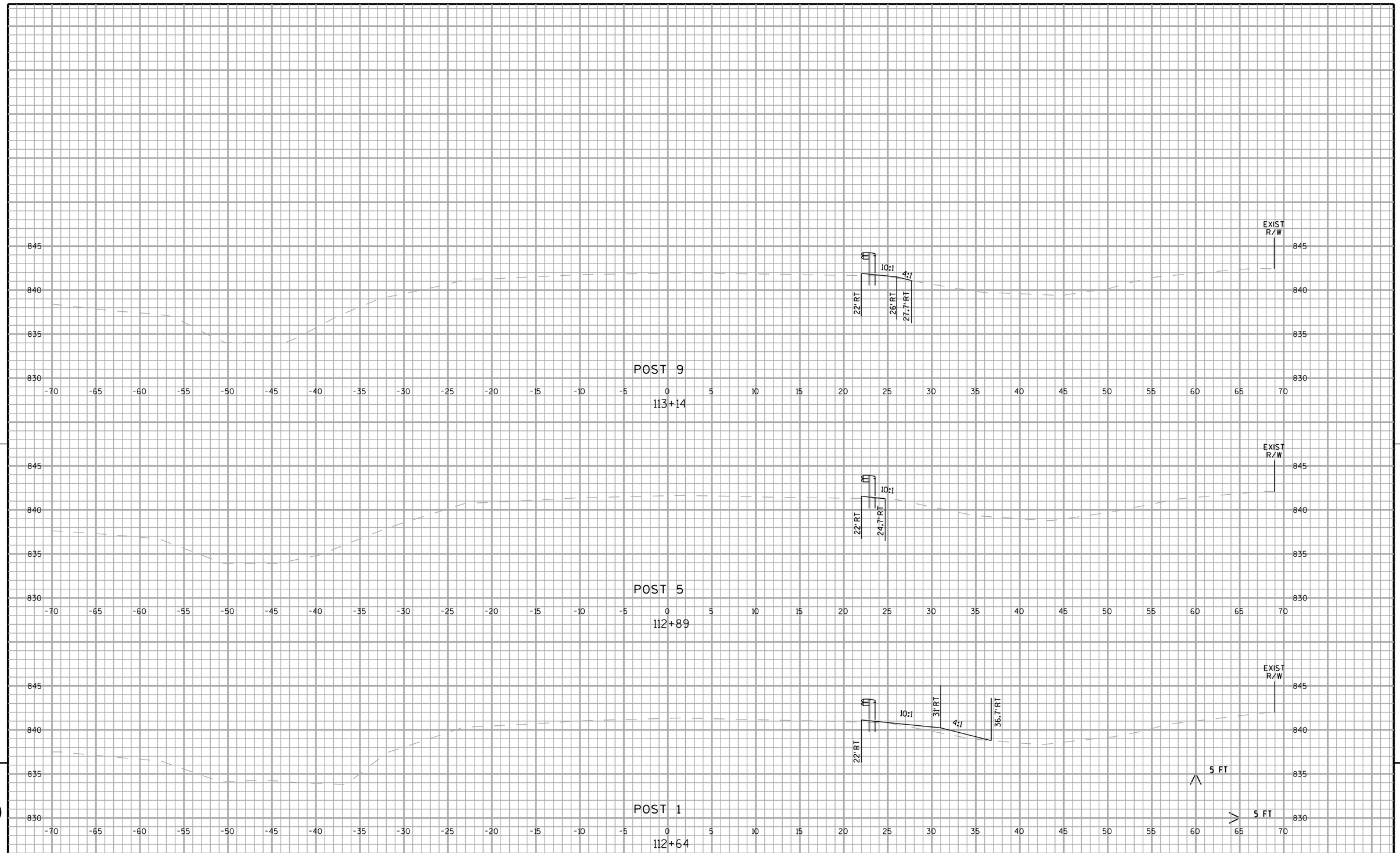

9

9

PROJECT NO: 1643-05-75	HWY: USH 14	COUNTY: RICHLAND	CROSS SECTIONS: GUARDRAIL SITE 4 - SOUTH SIDE	SHEET 255	E

FILE NAME : L:\Projects\11099\dwg\090204_xs.dgn | PLOT DATE : 11/06/12 | PLOT BY : tmoyer | PLOT NAME : | PLOT SCALE : 1:10

WISDOT/CADDS SHEET 21

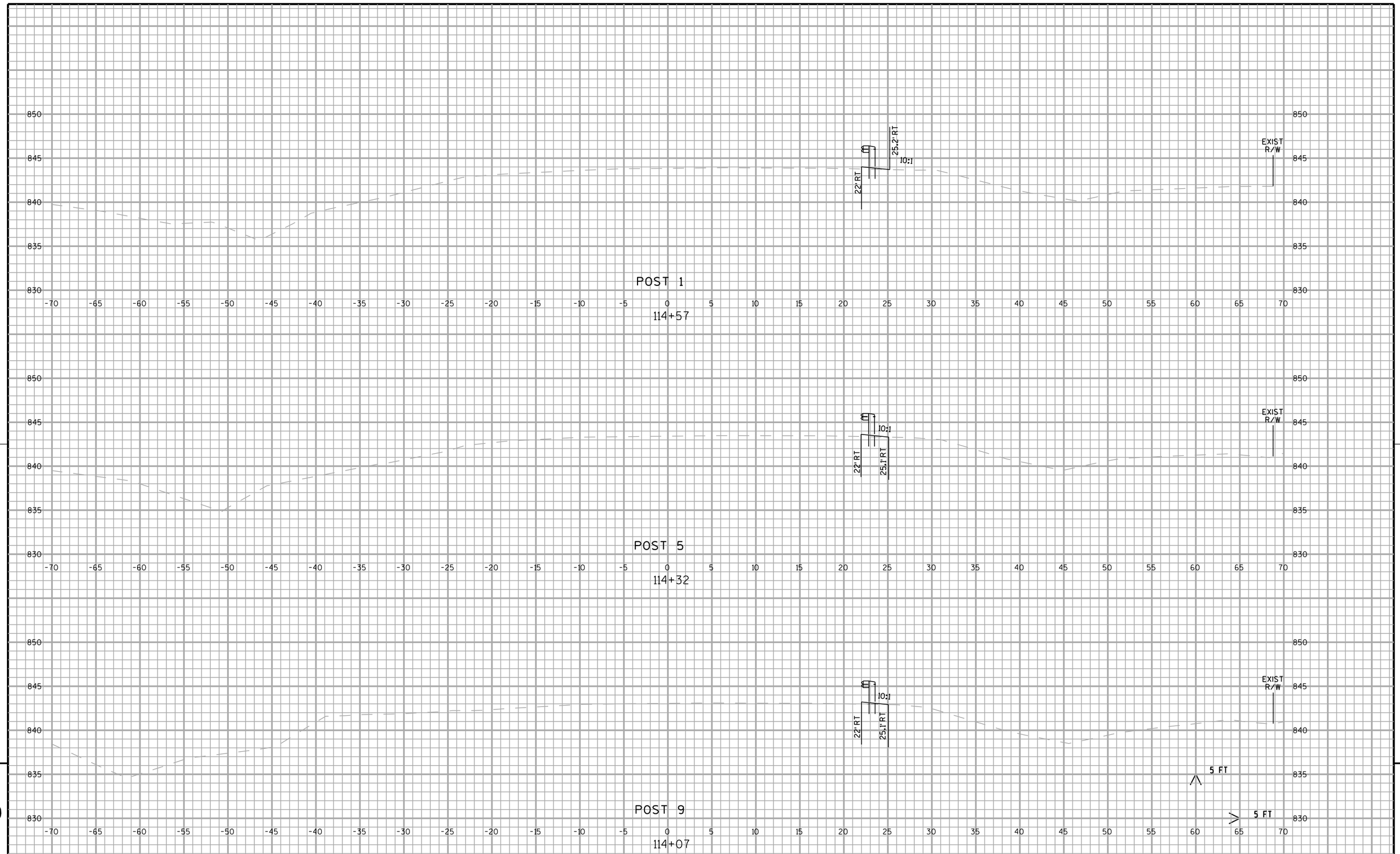

9

9

PROJECT NO: 1643-05-75	HWY: USH 14	COUNTY: RICHLAND	CROSS SECTIONS: GUARDRAIL SITE 4 - SOUTH SIDE	SHEET 256 E

FILE NAME : L:\Projects\11099\dwg\090204_xs.dgn PLOT DATE : 11/06/12 PLOT BY : tmoyer PLOT NAME : PLOT SCALE : 1:10

WISDOT/CADDS SHEET 21

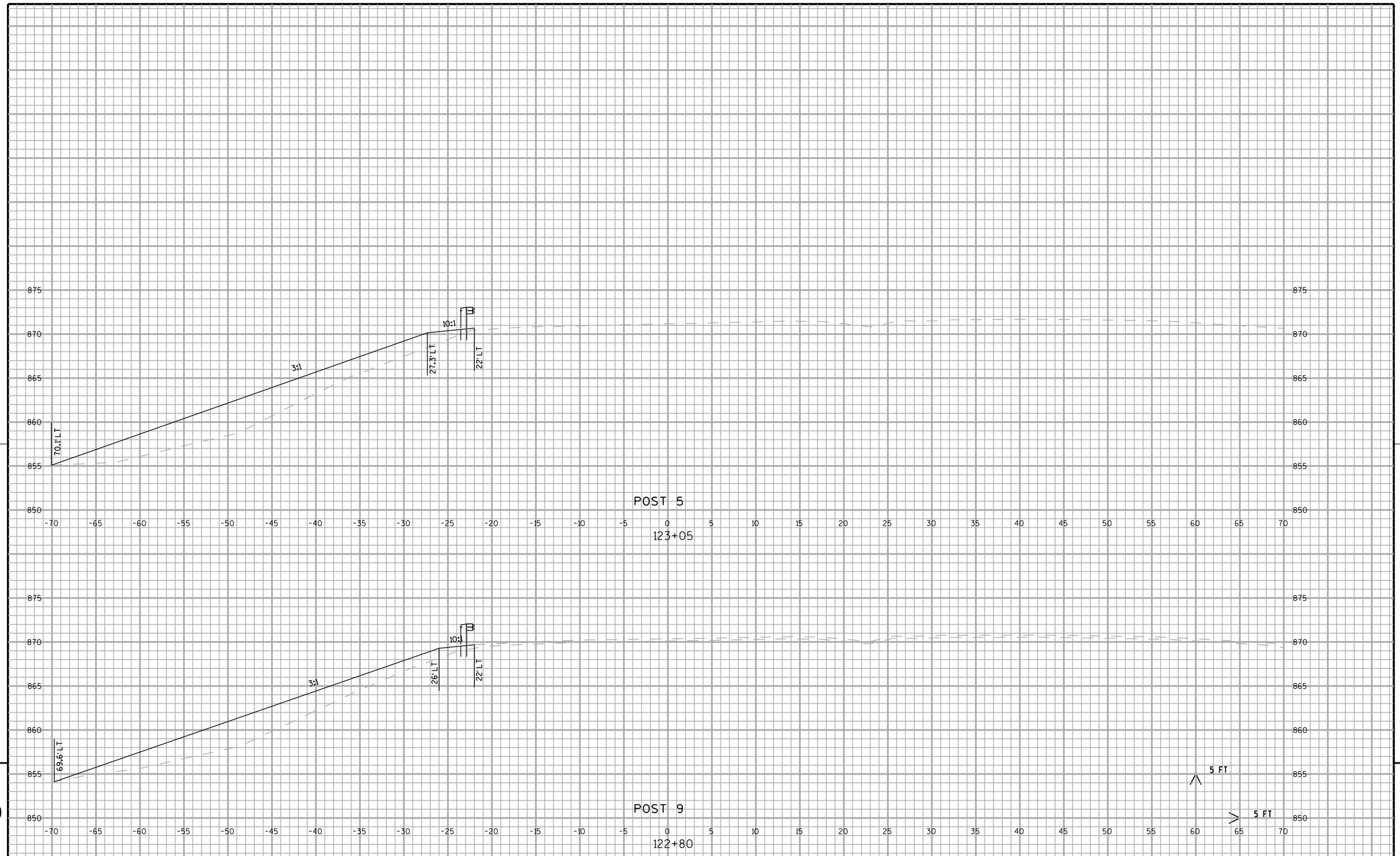

9

9

PROJECT NO: 1643-05-75	HWY: USH 14	COUNTY: RICHLAND	CROSS SECTIONS: GUARDRAIL SITE 5 - NORTH SIDE	SHEET 257	E

FILE NAME : L:\Projects\11099\dwg\090204_xs.dgn PLOT DATE : 11/06/12 PLOT BY : tmoyer PLOT NAME : PLOT SCALE : 1:10

WISDOT/CADDS SHEET 21

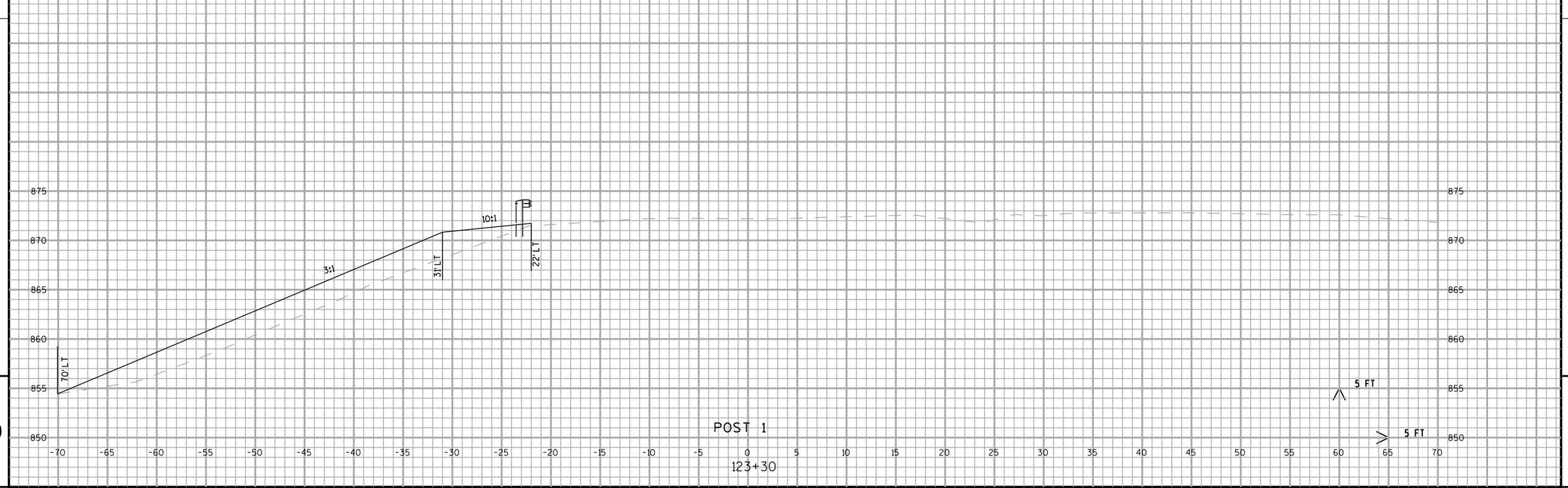

9

9

PROJECT NO: 1643-05-75	HWY: USH 14	COUNTY: RICHLAND	CROSS SECTIONS: GUARDRAIL SITE 5 - NORTH SIDE	SHEET 258 E

FILE NAME : L:\Projects\11099\dwg\090204_xs.dgn PLOT DATE : 11/06/12 PLOT BY : tmoyer PLOT NAME : PLOT SCALE : 1:10

WISDOT/CADDS SHEET 21

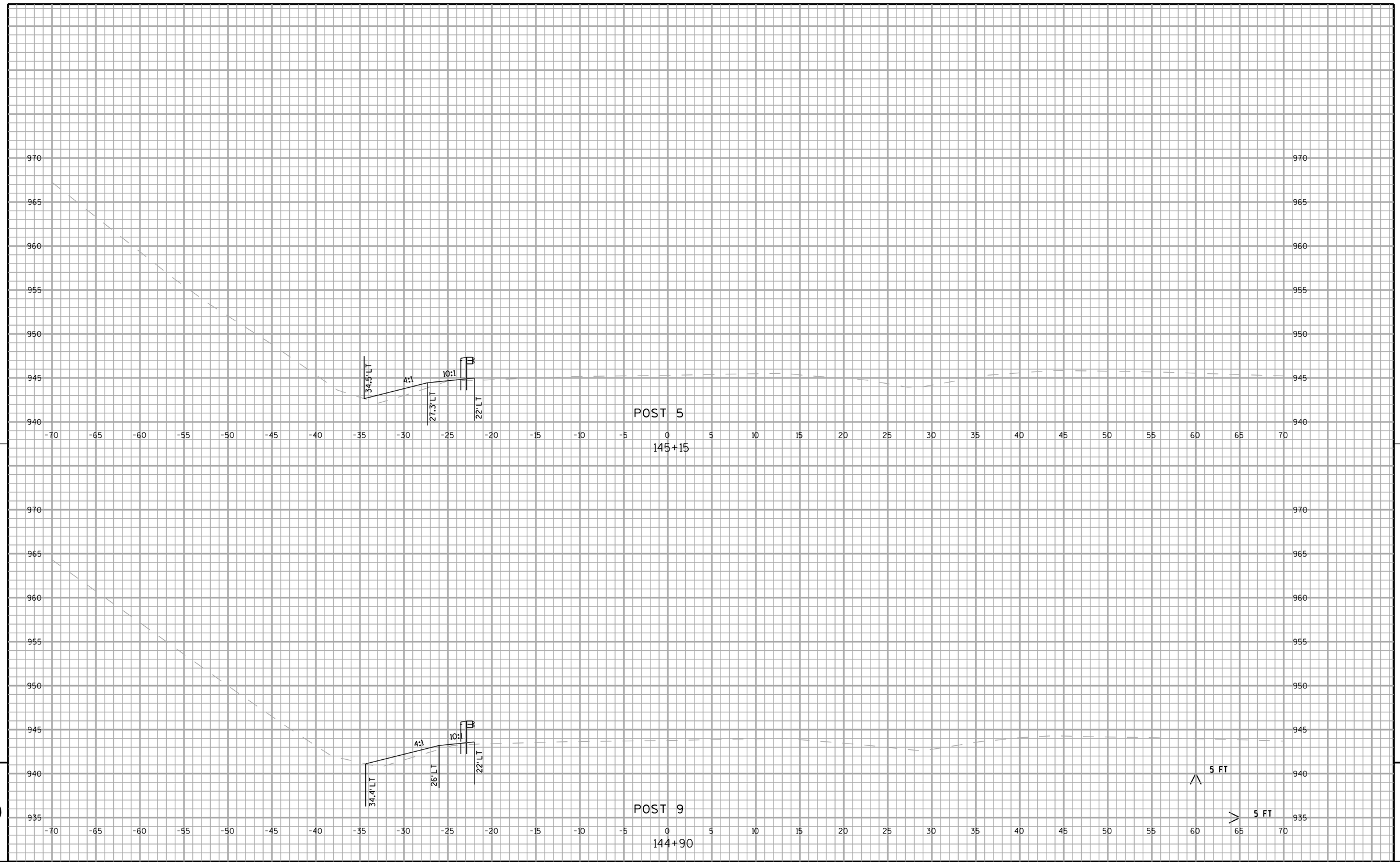

9

9

PROJECT NO: 1643-05-75	HWY: USH 14	COUNTY: RICHLAND	CROSS SECTIONS: GUARDRAIL SITE 7 - NORTH SIDE	SHEET 259	E

FILE NAME : L:\Projects\11099\dwg\090204_xs.dgn PLOT DATE : 11/06/12 PLOT BY : tmoyer PLOT NAME : PLOT SCALE : 1:10

WISDOT/CADDS SHEET 21

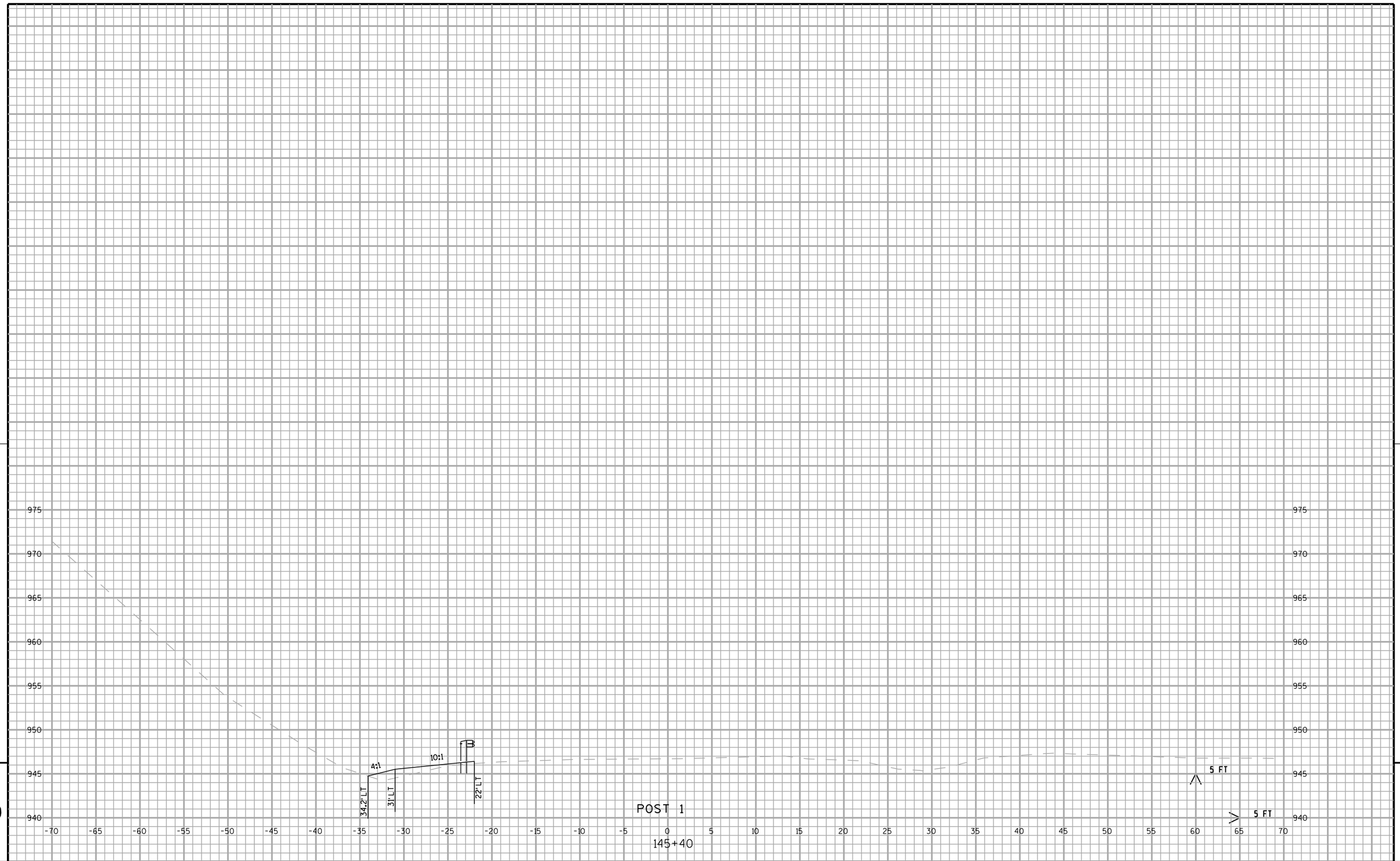

9

9

PROJECT NO: 1643-05-75	HWY: USH 14	COUNTY: RICHLAND	CROSS SECTIONS: GUARDRAIL SITE 7 - NORTH SIDE	SHEET 260	E

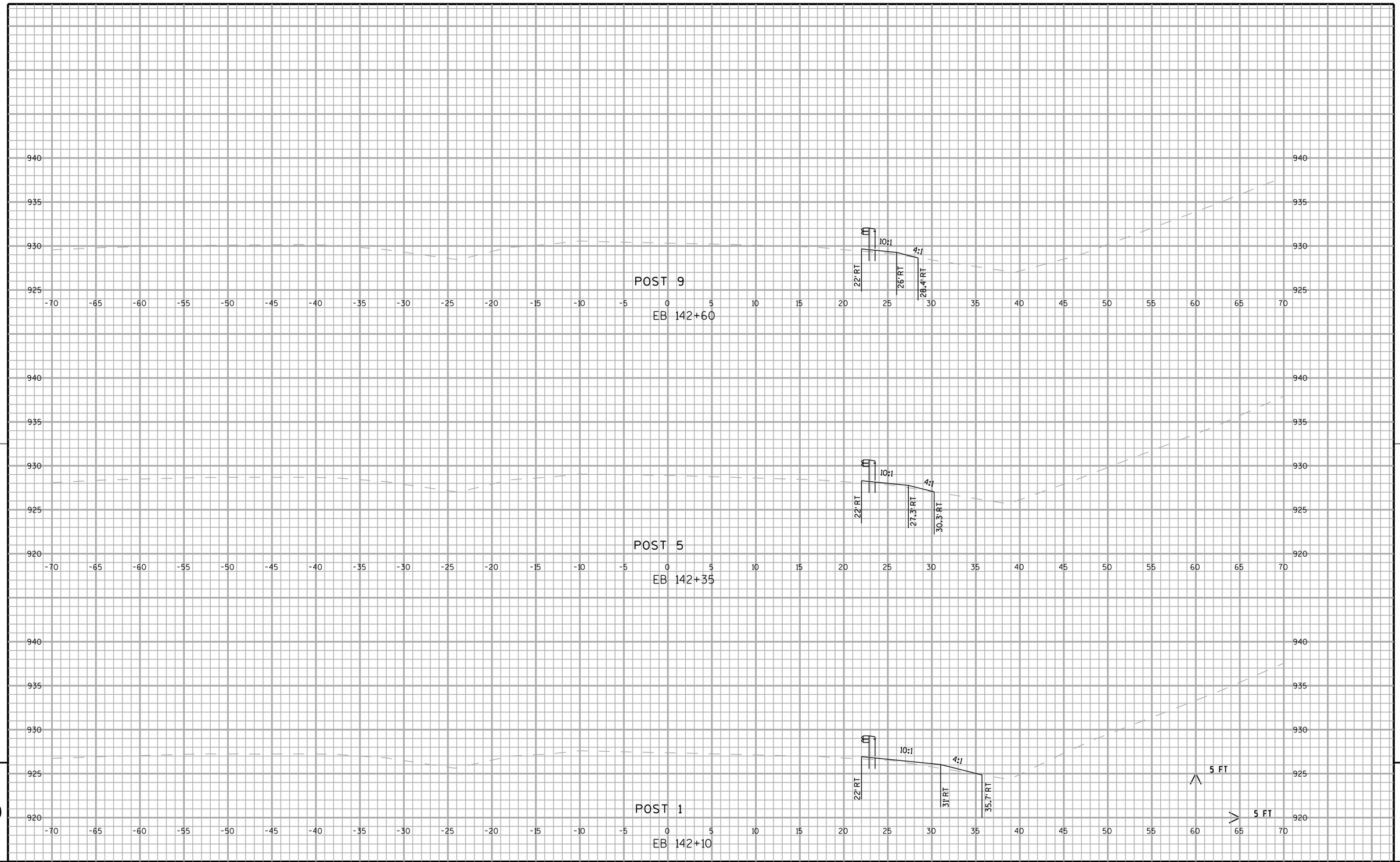

9

9

PROJECT NO: 1643-05-75	HWY: USH 14	COUNTY: RICHLAND	CROSS SECTIONS: GUARDRAIL SITE 8 - SOUTH SIDE	SHEET 261	E

FILE NAME : L:\Projects\11099\dwg\090204_xs.dgn PLOT DATE : 11/06/12 PLOT BY : tmoyer PLOT NAME : PLOT SCALE : 1:10

WISDOT/CADDS SHEET 21

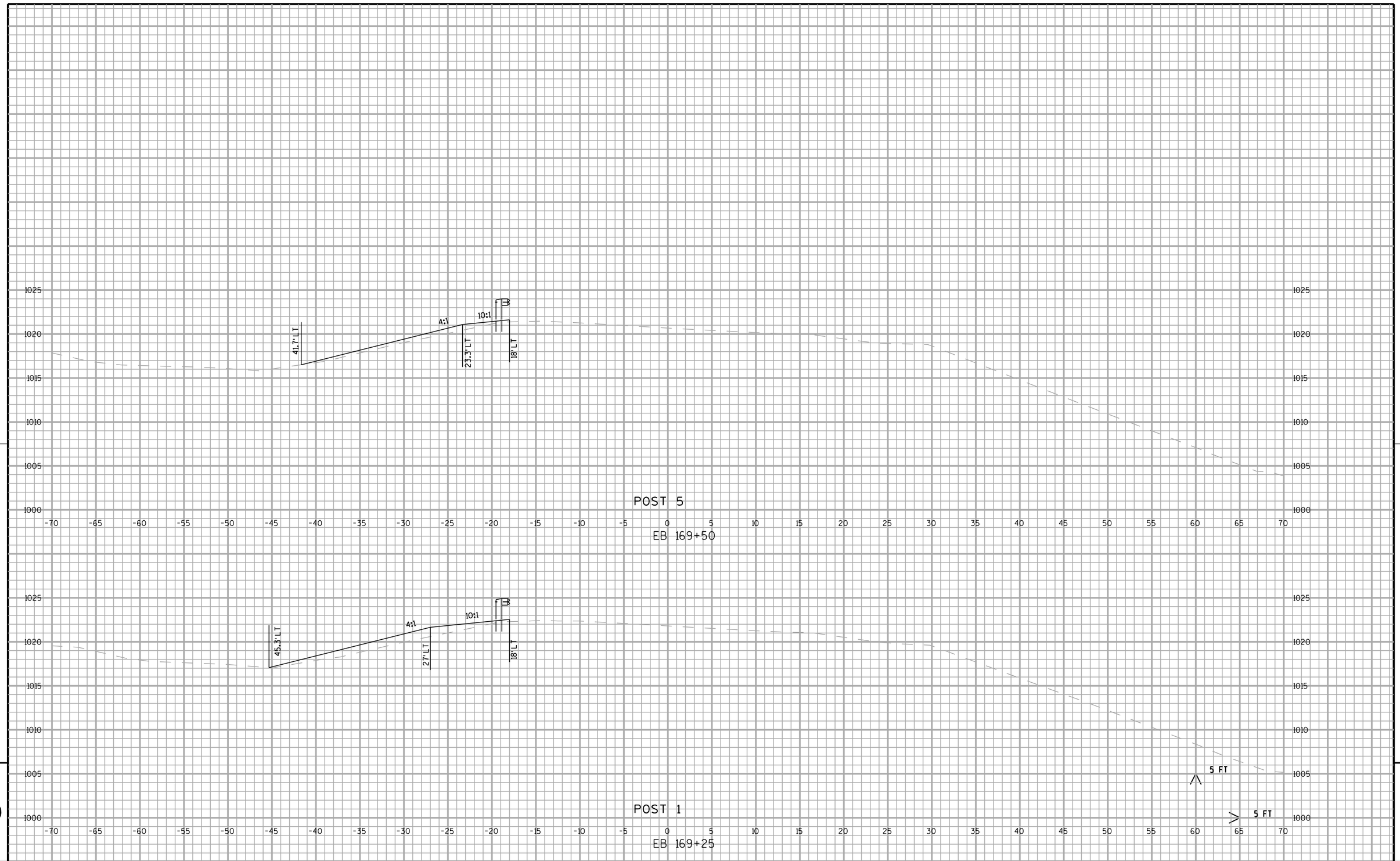

9 9

PROJECT NO: 1643-05-75	HWY: USH 14	COUNTY: RICHLAND	CROSS SECTIONS: GUARDRAIL SITE 9 - NORTH SIDE	SHEET 262 E

FILE NAME : L:\Projects\11099\dwg\090204_xs.dgn PLOT DATE : 11/06/12 PLOT BY : tmoyer PLOT NAME : PLOT SCALE : 1:10

WISDOT/CADDS SHEET 21

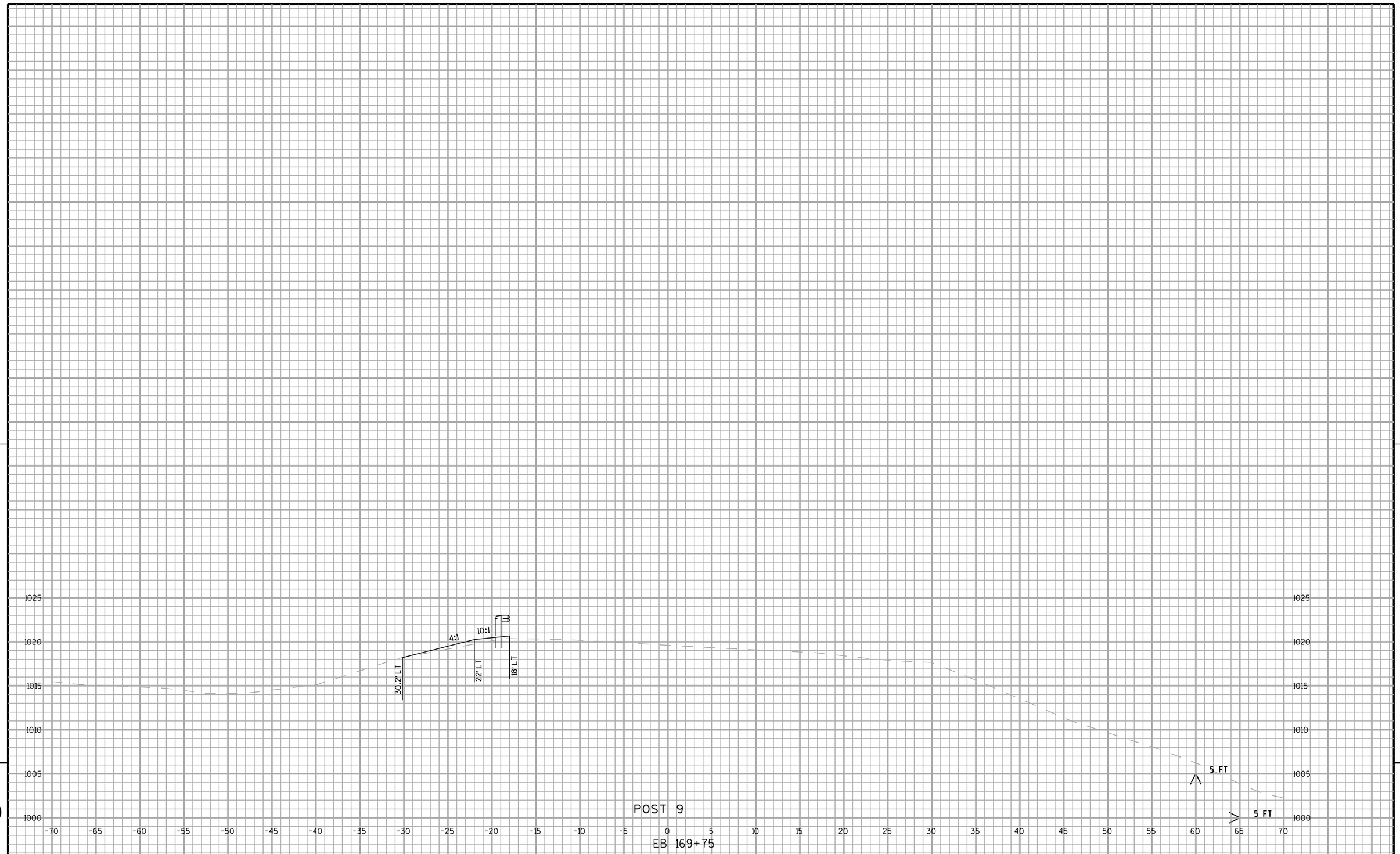

9

9

PROJECT NO: 1643-05-75	HWY: USH 14	COUNTY: RICHLAND	CROSS SECTIONS: GUARDRAIL SITE 9 - NORTH SIDE	SHEET	E

FILE NAME : L:\Projects\11099\dwg\090204_xs.dgn PLOT DATE : 11/06/12 PLOT BY : tmoyer PLOT NAME : PLOT SCALE : 1:10

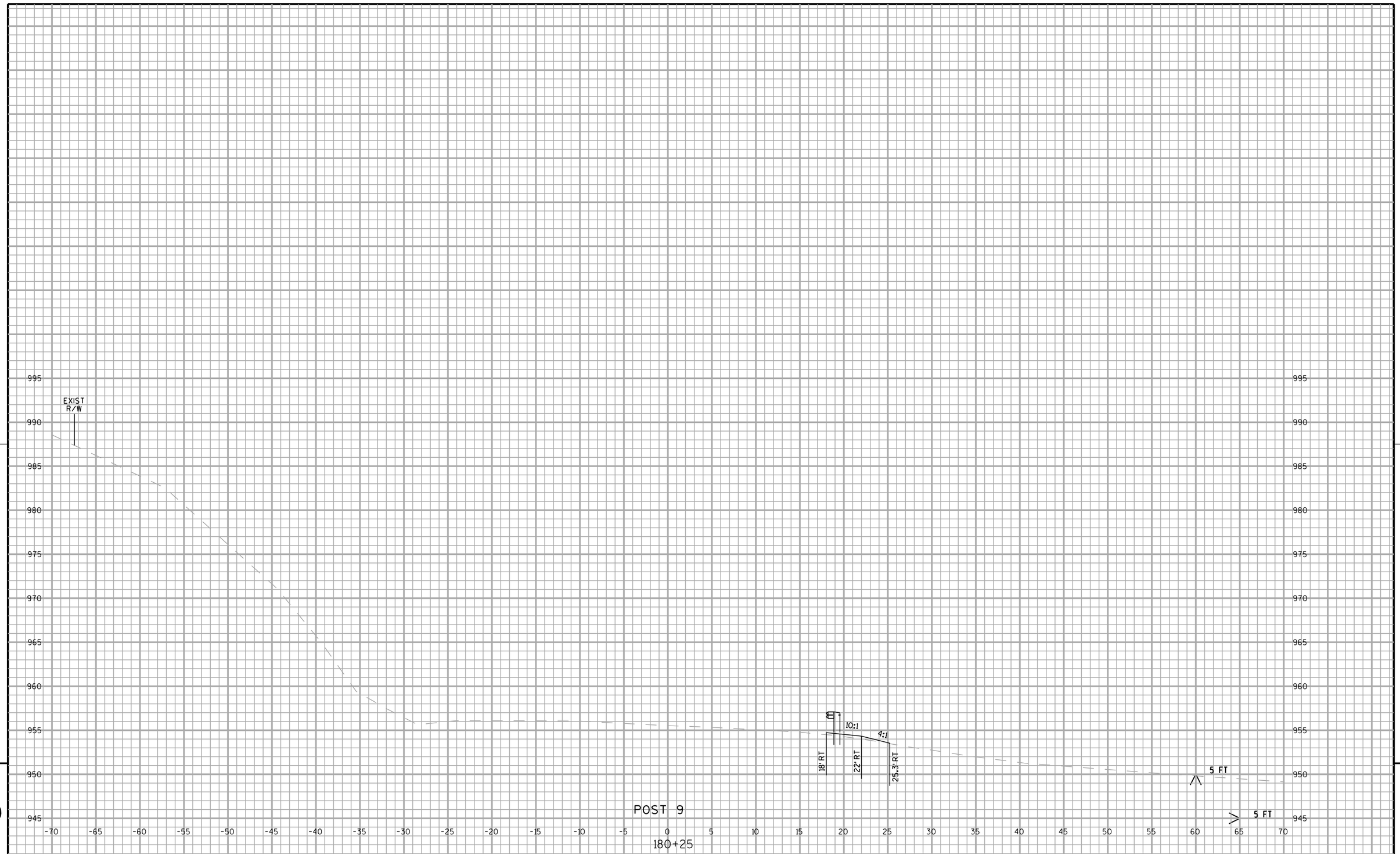

9

9

PROJECT NO: 1643-05-75	HWY: USH 14	COUNTY: RICHLAND	CROSS SECTIONS: GUARDRAIL SITE 10 - SOUTH SIDE	SHEET 264	E

FILE NAME : L:\Projects\11099\dwg\090204_xs.dgn PLOT DATE : 11/06/12 PLOT BY : tmoyer PLOT NAME : PLOT SCALE : 1:10

WISDOT/CADDS SHEET 21

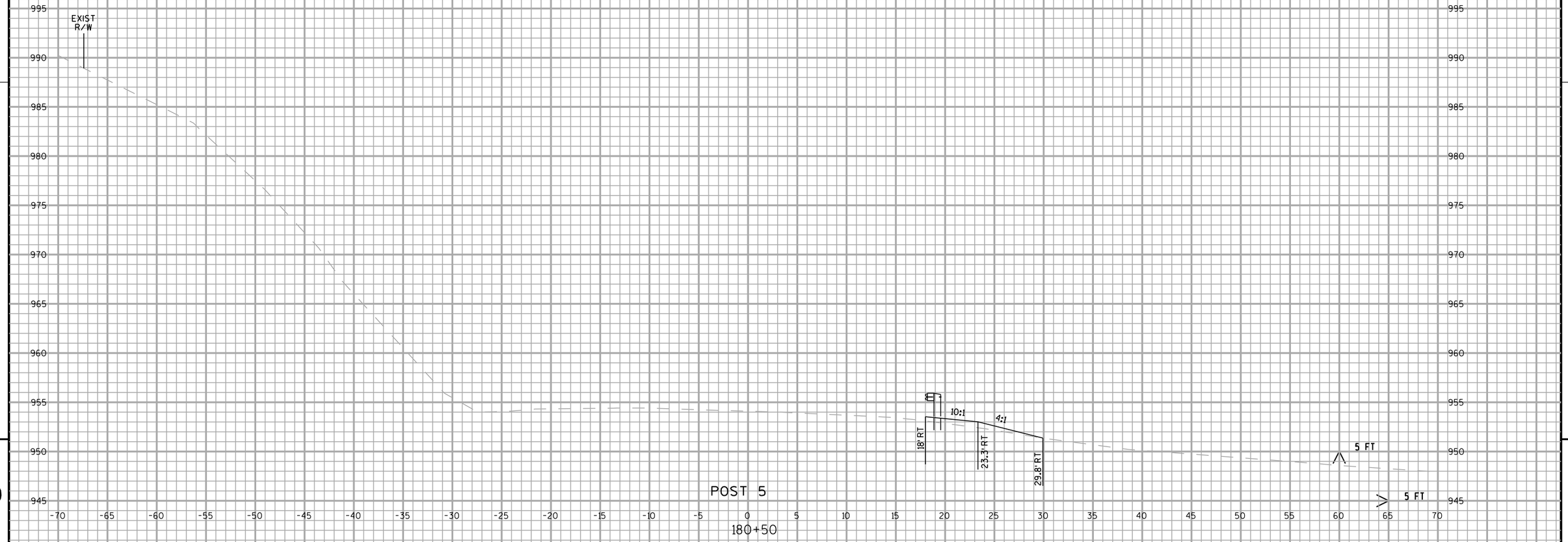

9

9

PROJECT NO: 1643-05-75	HWY: USH 14	COUNTY: RICHLAND	CROSS SECTIONS: GUARDRAIL SITE 10 - SOUTH SIDE	SHEET 265	E

FILE NAME : L:\Projects\11099\dwg\090204_xs.dgn PLOT DATE : 11/06/12 PLOT BY : tmoyer PLOT NAME : PLOT SCALE : 1:10

WISDOT/CADDS SHEET 21

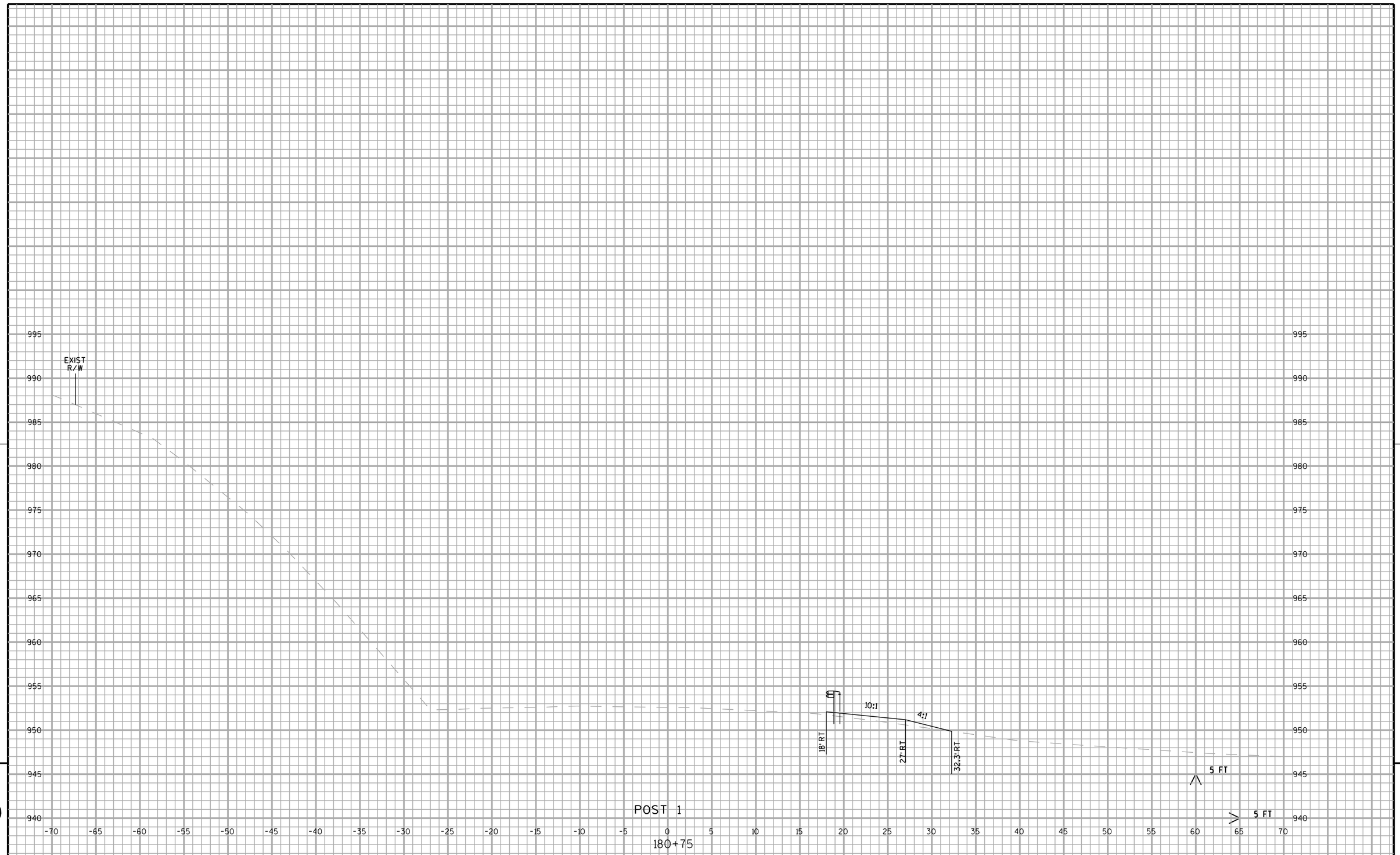

9

9

PROJECT NO: 1643-05-75	HWY: USH 14	COUNTY: RICHLAND	CROSS SECTIONS: GUARDRAIL SITE 10 - SOUTH SIDE	SHEET 266 E

FILE NAME : L:\Projects\11099\dwg\090204_xs.dgn PLOT DATE : 11/06/12 PLOT BY : tmoyer PLOT NAME : PLOT SCALE : 1:10

WISDOT/CADDS SHEET 21

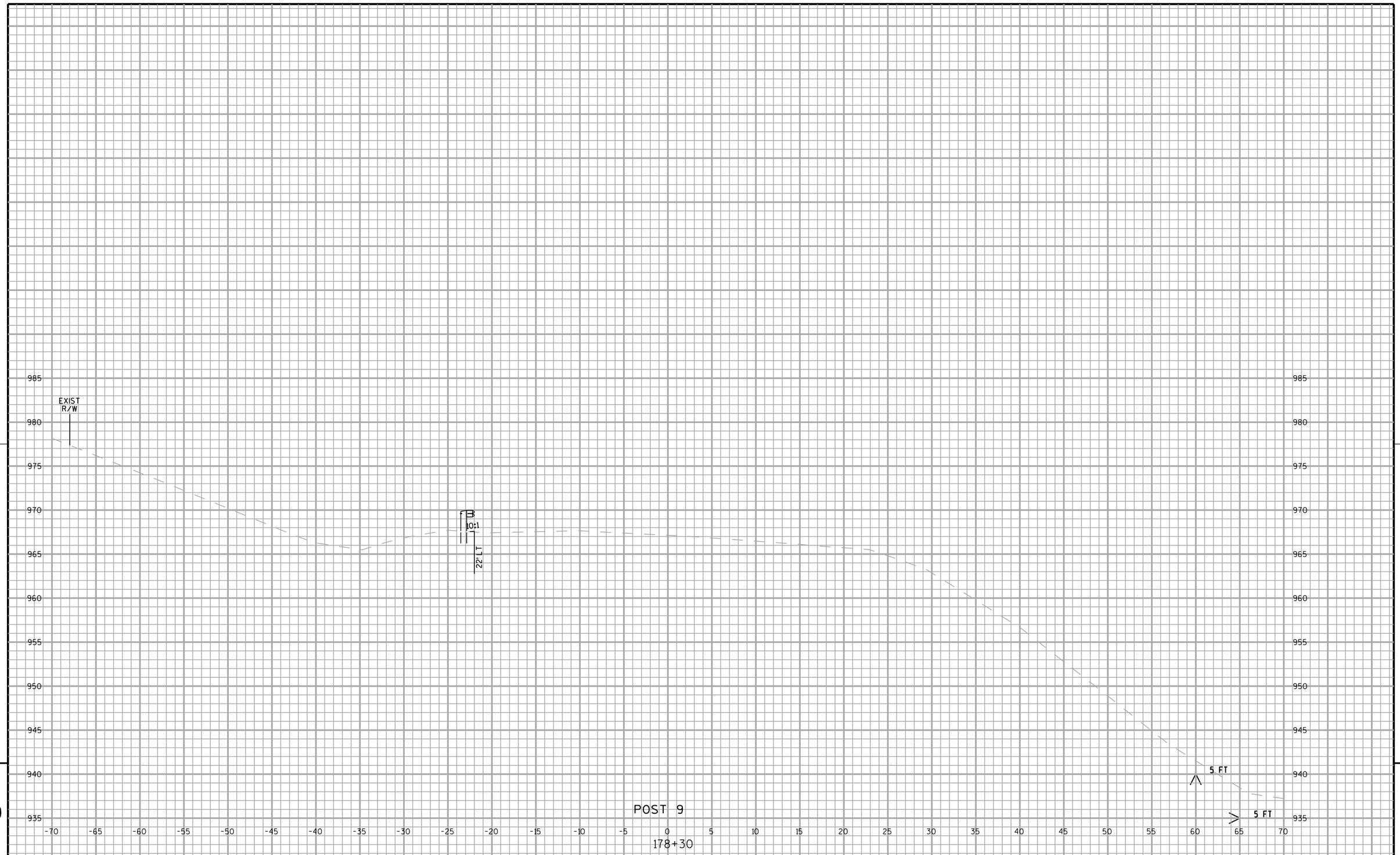

9

9

PROJECT NO: 1643-05-75	HWY: USH 14	COUNTY: RICHLAND	CROSS SECTIONS: GUARDRAIL SITE 10 - NORTH SIDE	SHEET 267 E

FILE NAME : L:\Projects\11099\dwg\090204_xs.dgn PLOT DATE : 11/06/12 PLOT BY : tmoyer PLOT NAME : PLOT SCALE : 1:10

WISDOT/CADDS SHEET 21

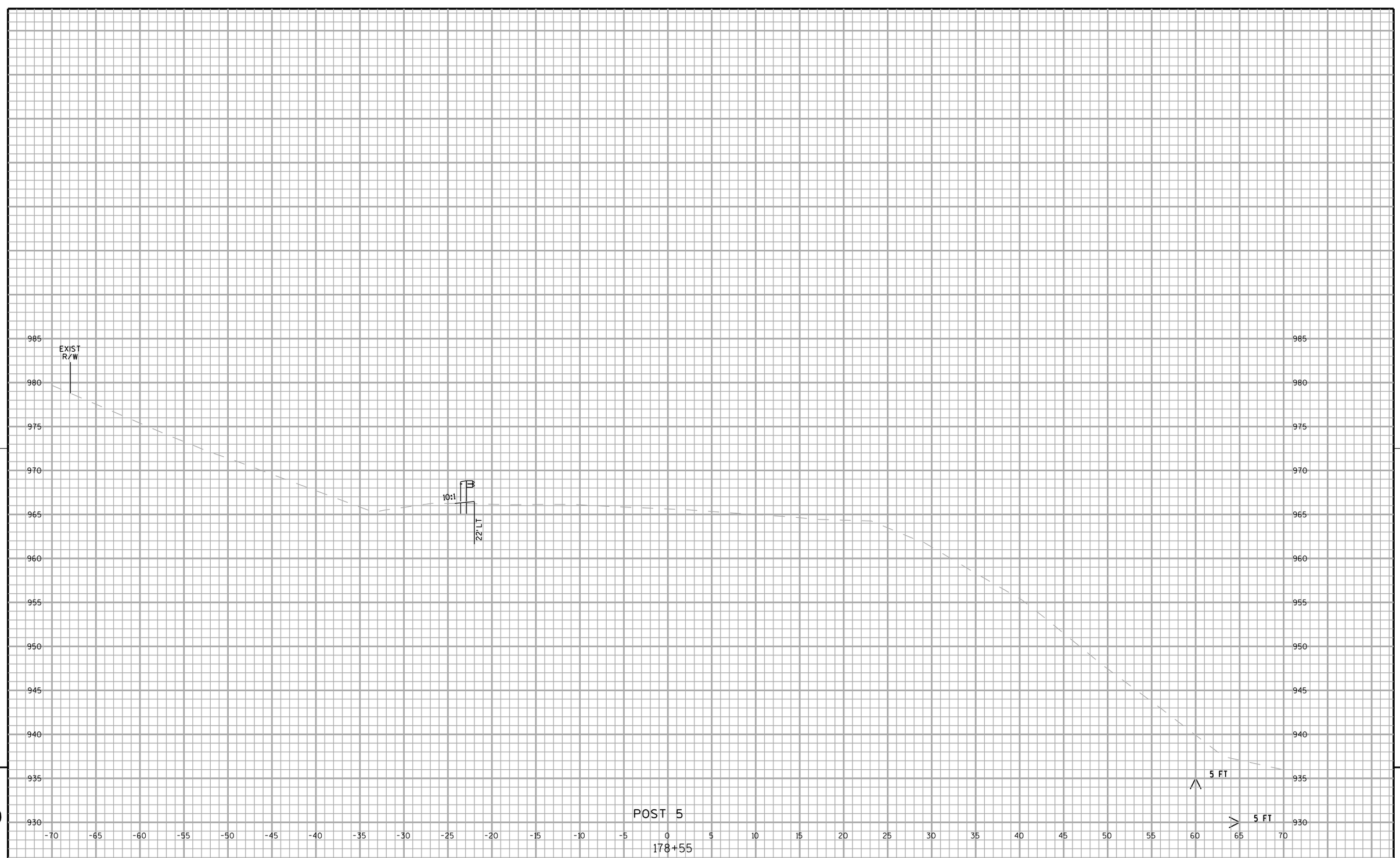

9

9

PROJECT NO: 1643-05-75	HWY: USH 14	COUNTY: RICHLAND	CROSS SECTIONS: GUARDRAIL SITE 10 - NORTH SIDE	SHEET	E

FILE NAME : L:\Projects\11099\dwg\090204_xs.dgn PLOT DATE : 11/06/12 PLOT BY : tmoyer PLOT NAME : PLOT SCALE : 1:10

WISDOT/CADDS SHEET 21

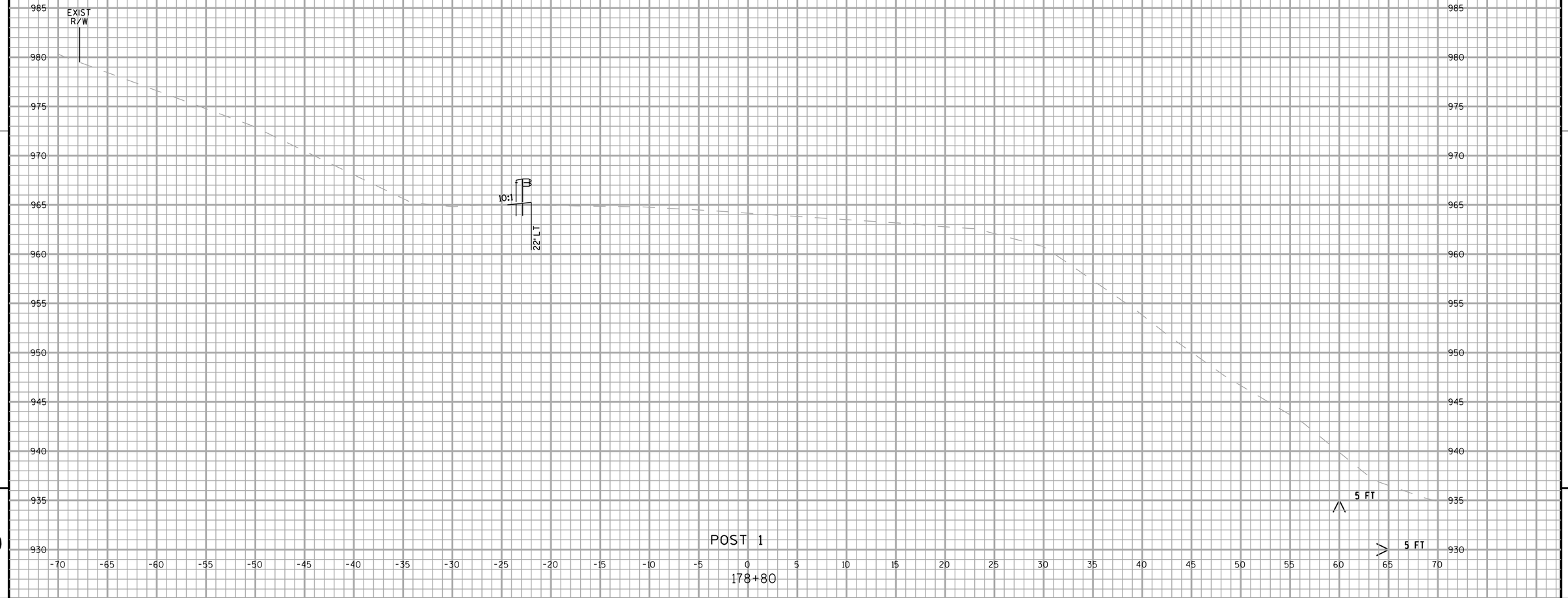

9

9

PROJECT NO: 1643-05-75	HWY: USH 14	COUNTY: RICHLAND	CROSS SECTIONS: GUARDRAIL SITE 10 - NORTH SIDE	SHEET 269	E

FILE NAME : L:\Projects\11099\dwg\090204_xs.dgn PLOT DATE : 11/06/12 PLOT BY : tmoyer PLOT NAME : PLOT SCALE : 1:10

WISDOT/CADDS SHEET 21

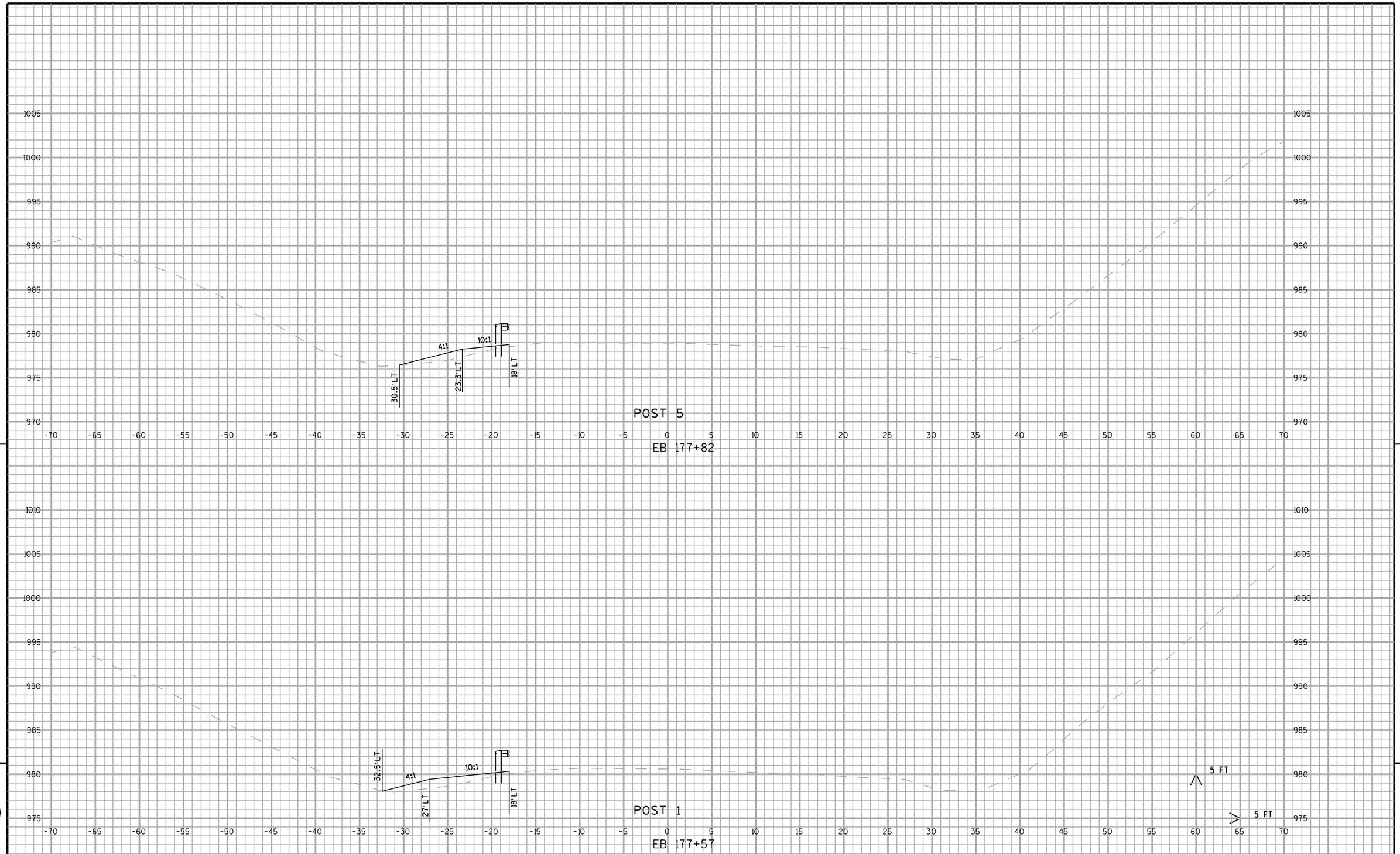

9

PROJECT NO: 1643-05-75	HWY: USH 14	COUNTY: RICHLAND	CROSS SECTIONS: GUARDRAIL SITE 11 - NORTH SIDE	SHEET E

9

FILE NAME : L:\Projects\11099\dwg\090204_xs.dgn PLOT DATE : 11/06/12 PLOT BY : tmoyer PLOT NAME : PLOT SCALE : 1:10.0735

WISDOT/CADDS SHEET 21

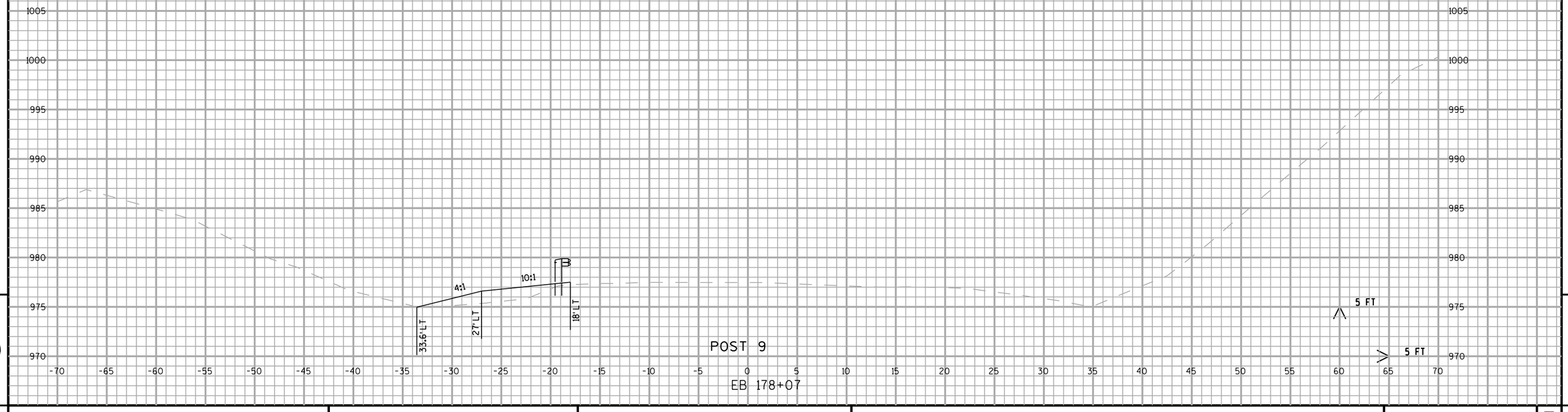

9

9

PROJECT NO: 1643-05-75	HWY: USH 14	COUNTY: RICHLAND	CROSS SECTIONS: GUARDRAIL SITE 11 - NORTH SIDE	SHEET E

FILE NAME : L:\Projects\11099\dwg\090204_xs.dgn PLOT DATE : 11/06/12 PLOT BY : tmoyer PLOT NAME : PLOT SCALE : 1:10.0735

WISDOT/CADDS SHEET 21

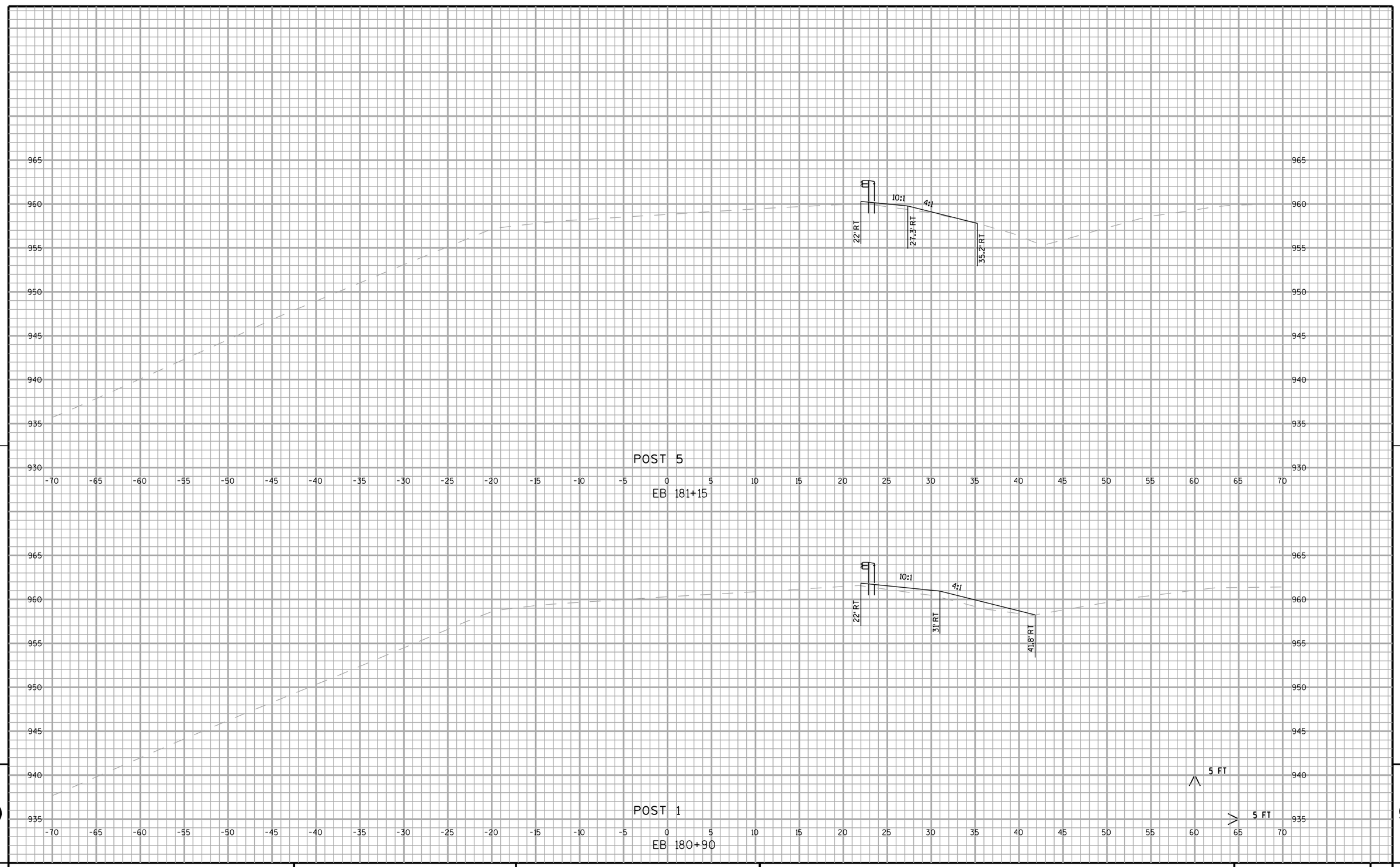

9

9

PROJECT NO: 1643-05-75	HWY: USH 14	COUNTY: RICHLAND	CROSS SECTIONS: GUARDRAIL SITE 11 - SOUTH SIDE	SHEET E

FILE NAME : L:\Projects\11099\dwg\090204_xs.dgn PLOT DATE : 11/06/12 PLOT BY : tmoyer PLOT NAME : PLOT SCALE : 1:10.0735

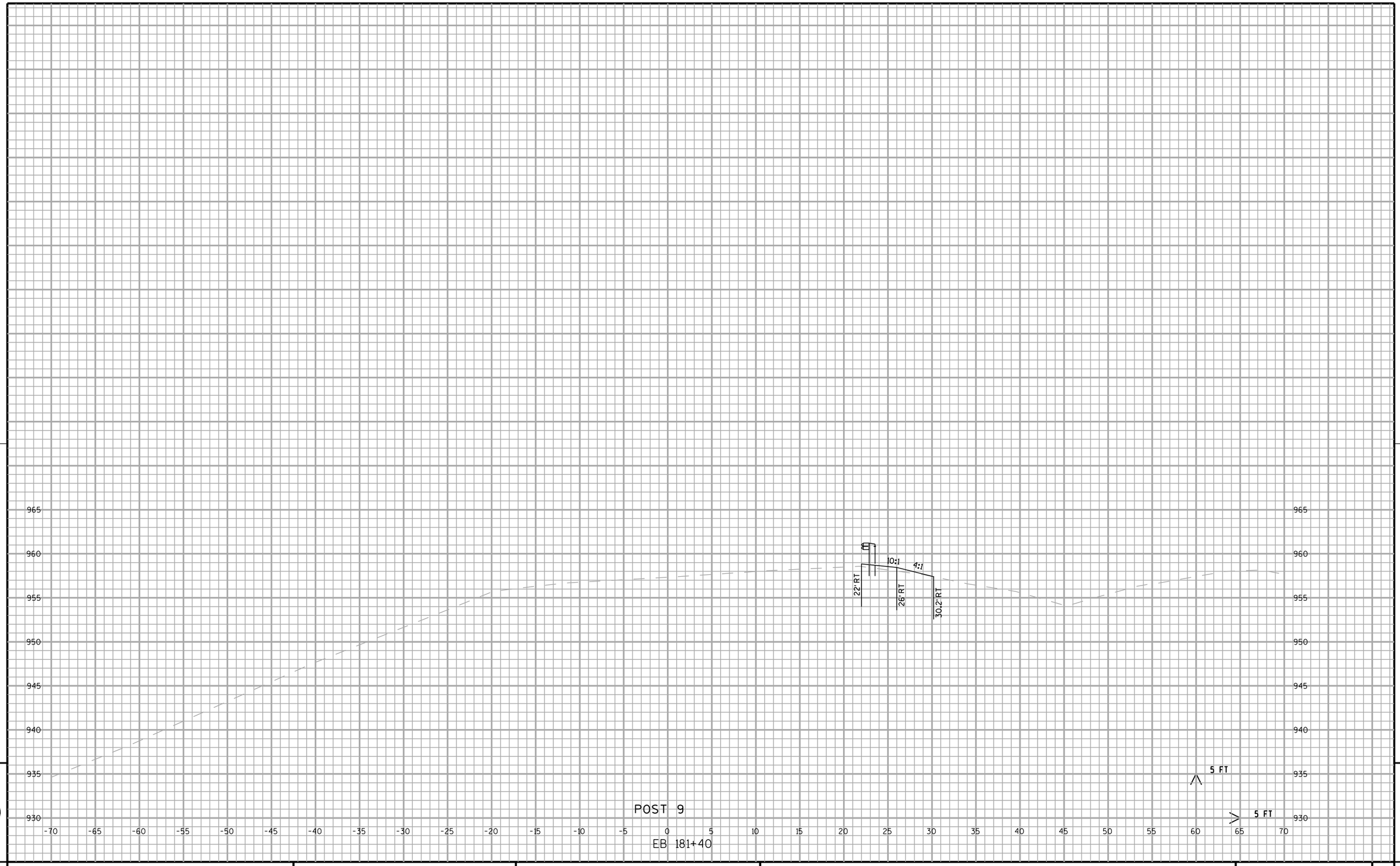

9

9

PROJECT NO: 1643-05-75	HWY: USH 14	COUNTY: RICHLAND	CROSS SECTIONS: GUARDRAIL SITE 11 - SOUTH SIDE	SHEET E

FILE NAME : L:\Projects\11099\dwg\090204_xs.dgn PLOT DATE : 11/06/12 PLOT BY : tmoyer PLOT NAME : PLOT SCALE : 1:10.0735

WISDOT/CADDS SHEET 21

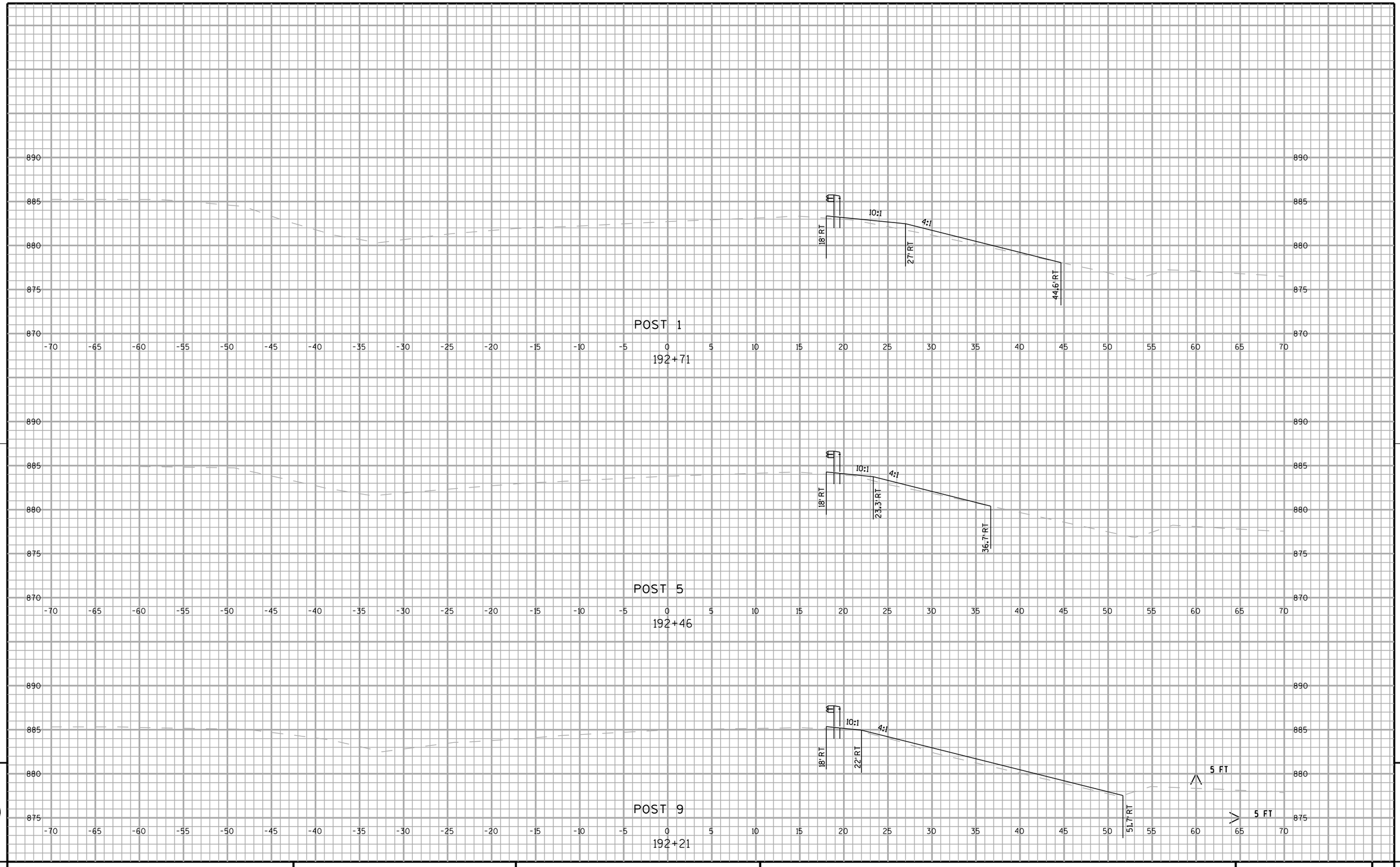

9

9

PROJECT NO: 1643-05-75	HWY: USH 14	COUNTY: RICHLAND	CROSS SECTIONS: GUARDRAIL SITE 12 - SOUTH SIDE	SHEET E

FILE NAME : L:\Projects\11099\dwg\090204_xs.dgn PLOT DATE : 11/06/12 PLOT BY : tmoyer PLOT NAME : PLOT SCALE : 1:10.0735

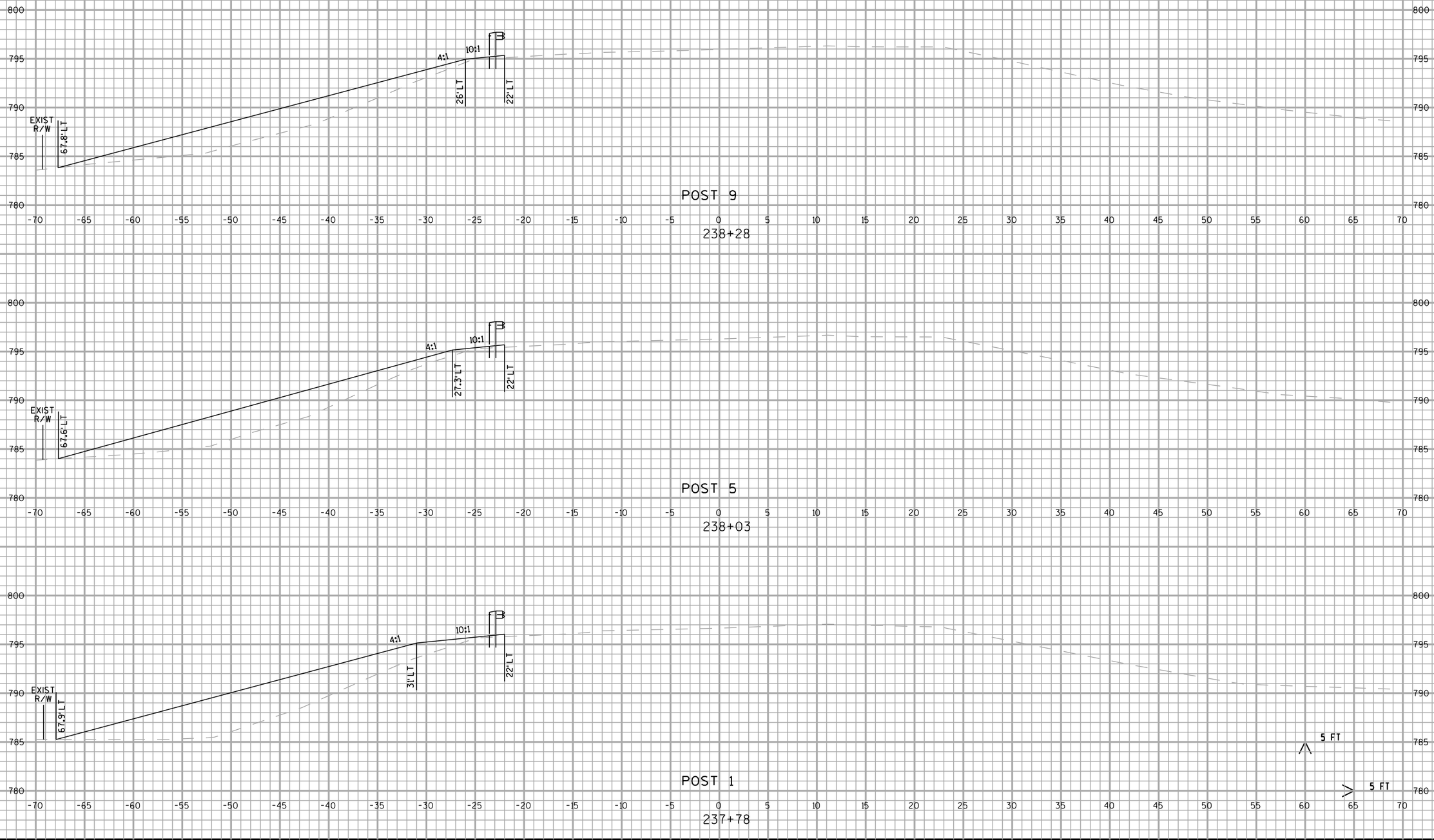

9

9

PROJECT NO: 1643-05-75	HWY: USH 14	COUNTY: RICHLAND	CROSS SECTIONS: GUARDRAIL SITE 14 - NORTH SIDE	SHEET 275	E

FILE NAME : L:\Projects\11099\dwg\090204_xs.dgn PLOT DATE : 11/06/12 PLOT BY : tmoyer PLOT NAME : PLOT SCALE : 1:10

WISDOT/CADDS SHEET 21

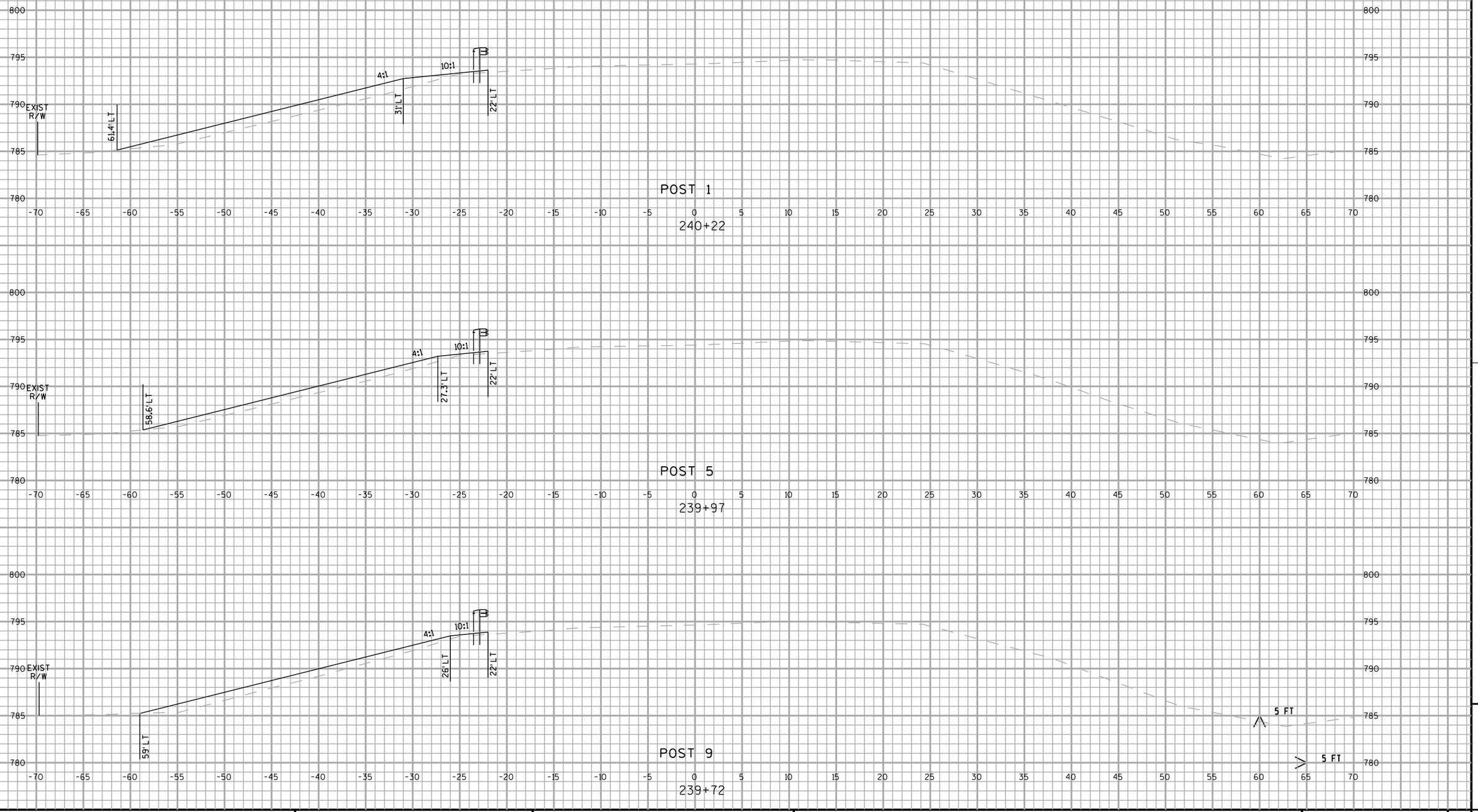

9

9

PROJECT NO: 1643-05-75	HWY: USH 14	COUNTY: RICHLAND	CROSS SECTIONS: GUARDRAIL SITE 14 - NORTH SIDE	SHEET 276 E

FILE NAME : L:\Projects\11099\dwg\090204_xs.dgn PLOT DATE : 11/06/12 PLOT BY : tmoyer PLOT NAME : PLOT SCALE : 1:10

WISDOT/CADDS SHEET 21

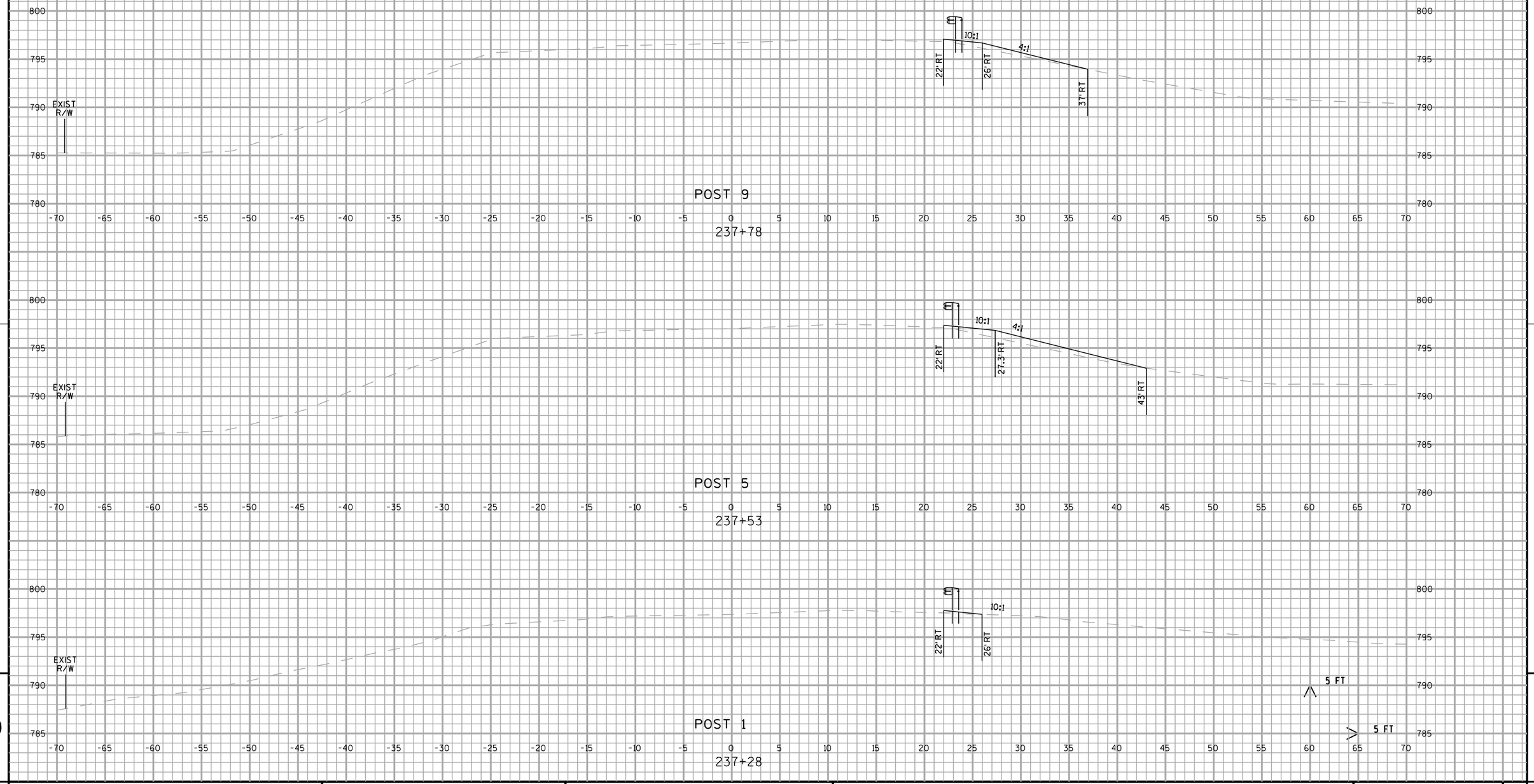

9

9

PROJECT NO: 1643-05-75	HWY: USH 14	COUNTY: RICHLAND	CROSS SECTIONS: GUARDRAIL SITE 14 - SOUTH SIDE	SHEET 277	E

FILE NAME : L:\Projects\11099\dwg\090204_xs.dgn PLOT DATE : 11/06/12 PLOT BY : tmoyer PLOT NAME : PLOT SCALE : 1:10

WISDOT/CADDS SHEET 21

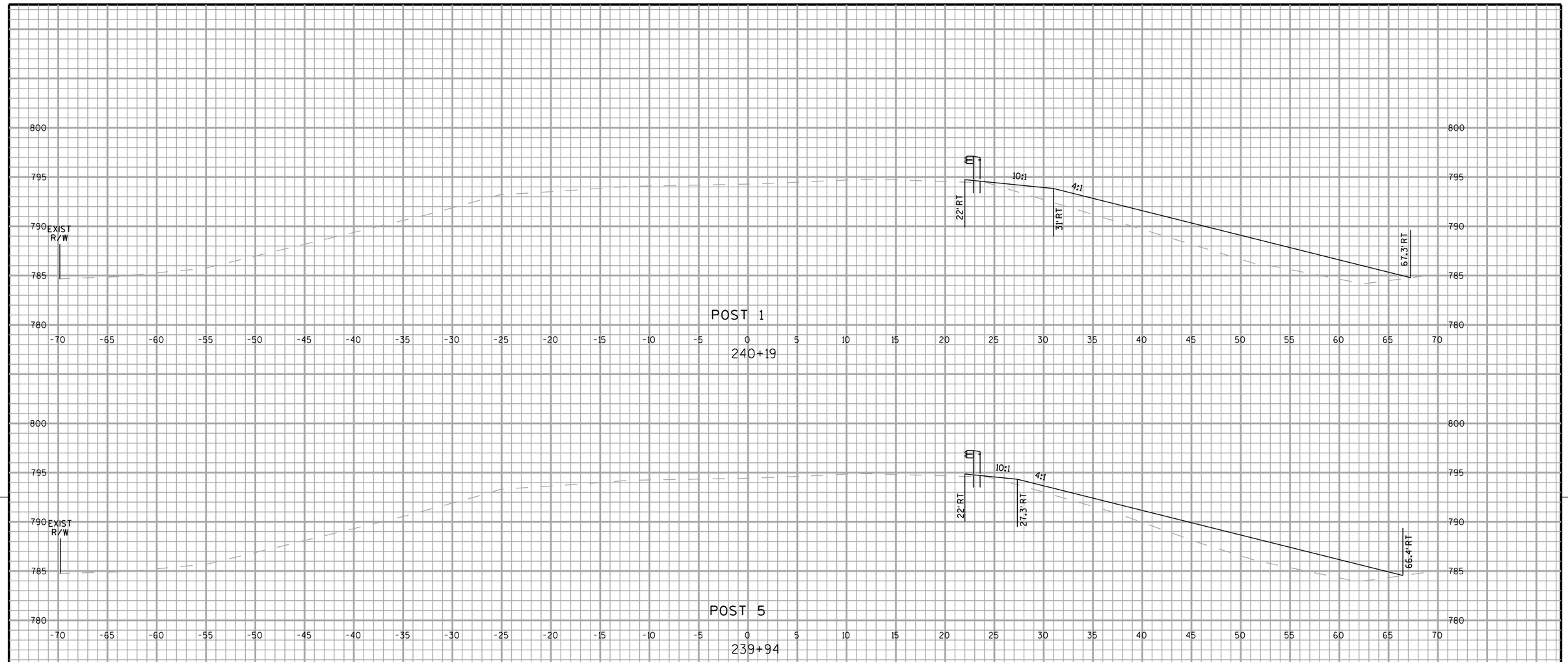

9

PROJECT NO: 1643-05-75	HWY: USH 14	COUNTY: RICHLAND	CROSS SECTIONS: GUARDRAIL SITE 14 - SOUTH SIDE	SHEET 278	E

9

FILE NAME : L:\Projects\11099\dwg\090204_xs.dgn PLOT DATE : 11/06/12 PLOT BY : tmoyer PLOT NAME : PLOT SCALE : 1:10

WISDOT/CADDS SHEET 21

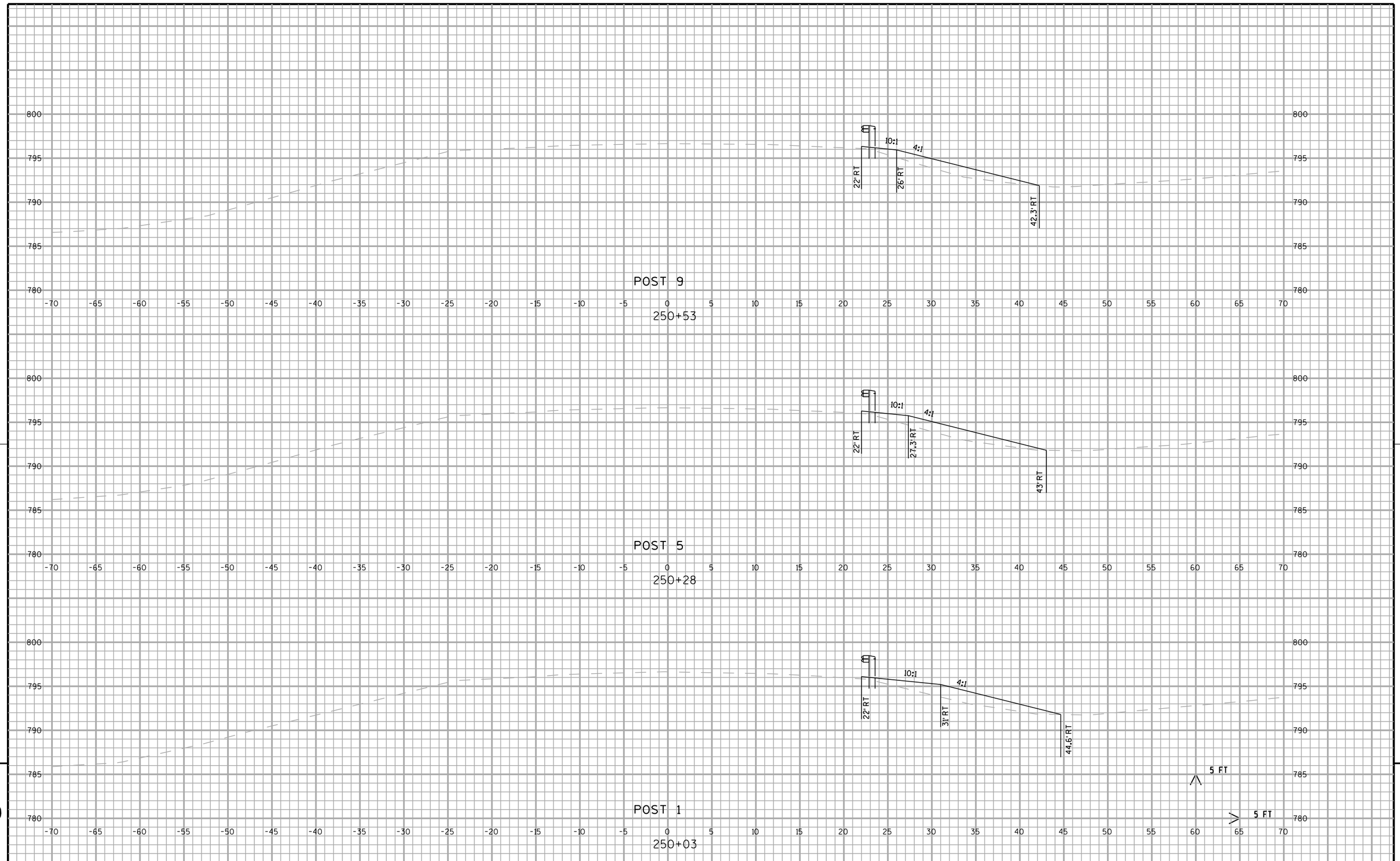

9

9

PROJECT NO: 1643-05-75	HWY: USH 14	COUNTY: RICHLAND	CROSS SECTIONS: GUARDRAIL SITE 14 - SOUTH SIDE	SHEET 279	E

FILE NAME : L:\Projects\11099\dwg\090204_xs.dgn PLOT DATE : 11/06/12 PLOT BY : tmoyer PLOT NAME : PLOT SCALE : 1:10

WISDOT/CADDS SHEET 21

POST 5

264+60

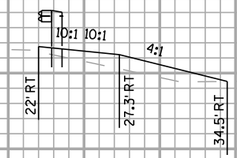

POST 1

264+35

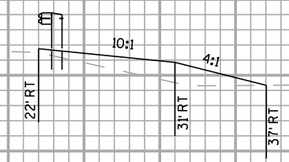

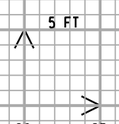

9

9

PROJECT NO: 1643-05-75	HWY: USH 14	COUNTY: RICHLAND	CROSS SECTIONS: GUARDRAIL SITE 16 - SOUTH SIDE	SHEET 280	E

FILE NAME : L:\Projects\11099\dwg\090204_xs.dgn PLOT DATE : 11/06/12 PLOT BY : tmoyer PLOT NAME : PLOT SCALE : 1:10

WISDOT/CADDS SHEET 21

POST 5

266+90

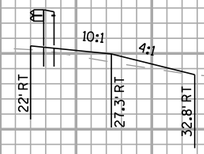

POST 9

266+65

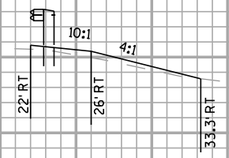

POST 9

264+85

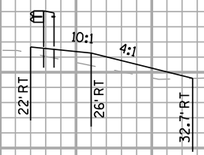

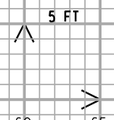

9

9

PROJECT NO: 1643-05-75	HWY: USH 14	COUNTY: RICHLAND	CROSS SECTIONS: GUARDRAIL SITE 16 - SOUTH SIDE	SHEET 281	E

FILE NAME : L:\Projects\11099\dwg\090204_xs.dgn PLOT DATE : 11/06/12 PLOT BY : tmoyer PLOT NAME : PLOT SCALE : 1:10

WISDOT/CADDS SHEET 21

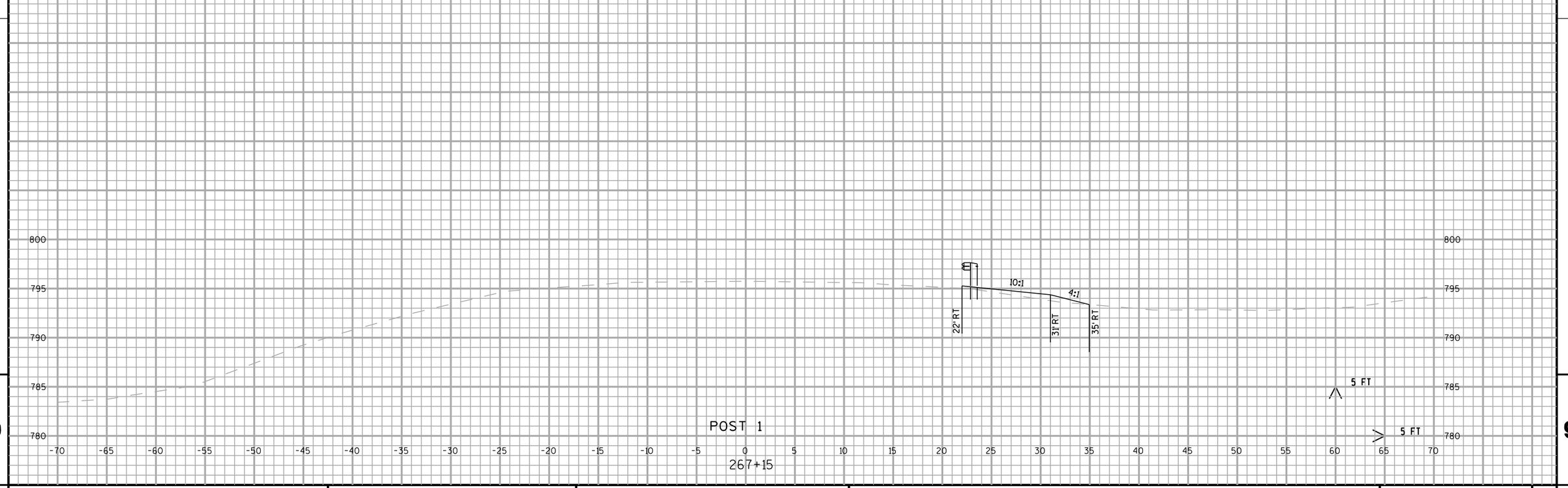

9

9

PROJECT NO: 1643-05-75	HWY: USH 14	COUNTY: RICHLAND	CROSS SECTIONS: GUARDRAIL SITE 16 - SOUTH SIDE	SHEET E

FILE NAME : L:\Projects\11099\dwg\090204_xs.dgn PLOT DATE : 11/06/12 PLOT BY : tmoyer PLOT NAME : PLOT SCALE : 1:10

WISDOT/CADDS SHEET 21

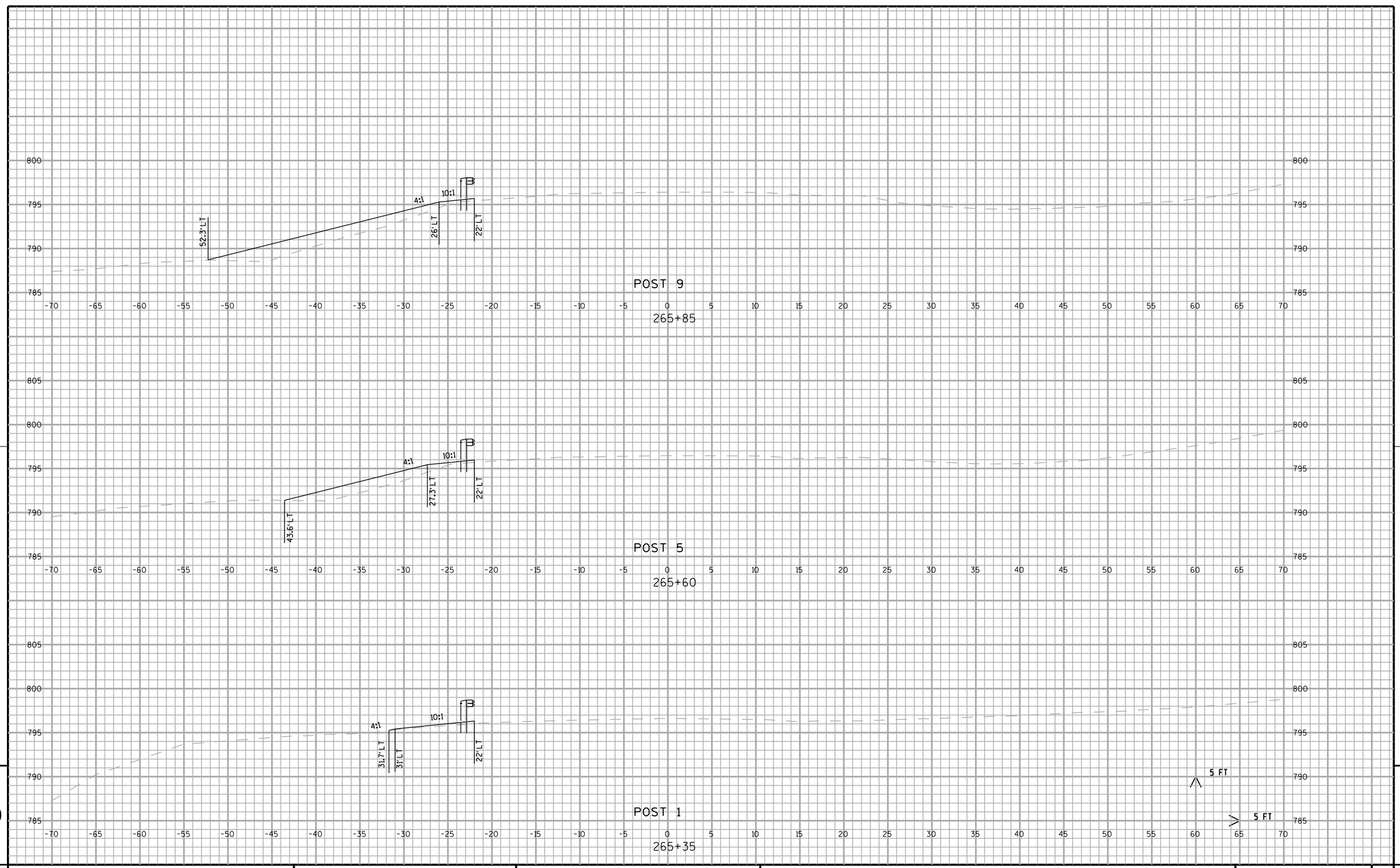

9

PROJECT NO: 1643-05-75	HWY: USH 14	COUNTY: RICHLAND	CROSS SECTIONS: GUARDRAIL SITE 16 - NORTH SIDE	SHEET 283	E

9

FILE NAME : L:\Projects\11099\dwg\090204_xs.dgn PLOT DATE : 11/06/12 PLOT BY : tmoyer PLOT NAME : PLOT SCALE : 1:10

WISDOT/CADDS SHEET 21

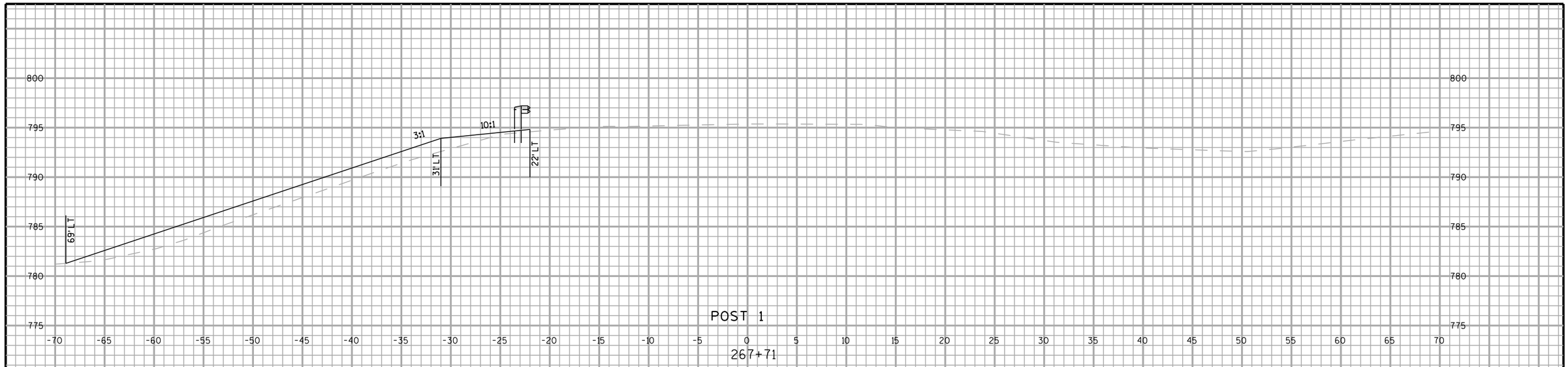

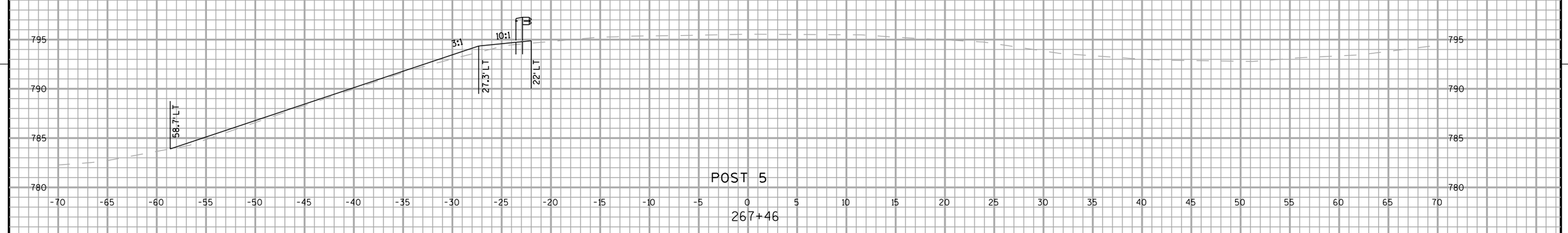

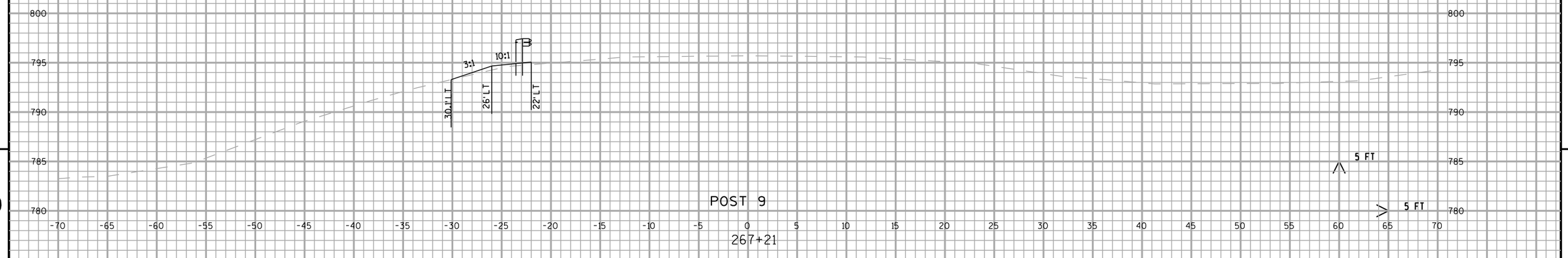

9 9

PROJECT NO: 1643-05-75	HWY: USH 14	COUNTY: RICHLAND	CROSS SECTIONS: GUARDRAIL SITE 16 - NORTH SIDE	SHEET 284	E

FILE NAME : L:\Projects\11099\dwg\090204_xs.dgn PLOT DATE : 11/06/12 PLOT BY : tmoyer PLOT NAME : PLOT SCALE : 1:10

WISDOT/CADDS SHEET 21

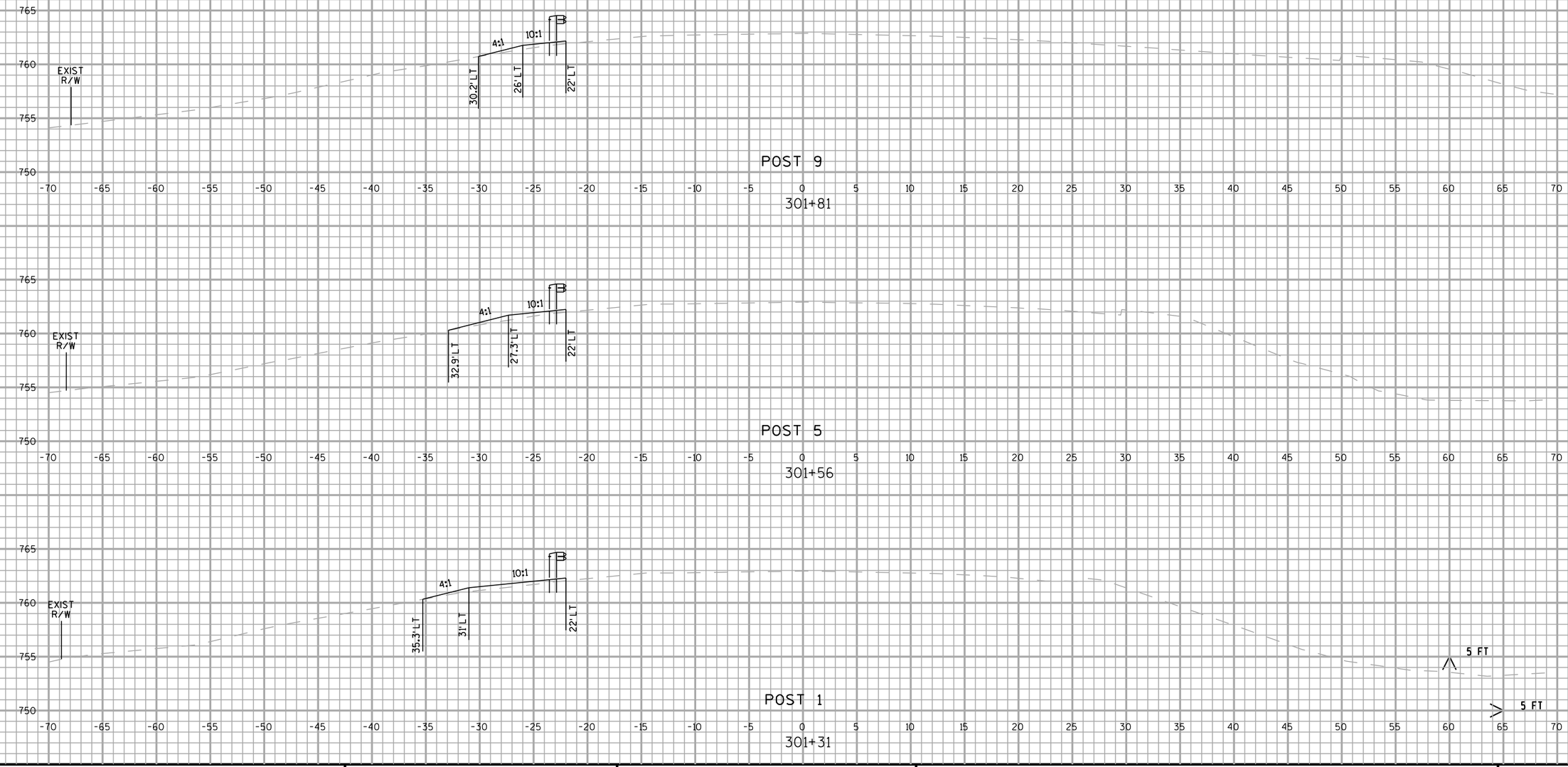

POST 9

301+81

POST 5

301+56

POST 1

301+31

9 9

PROJECT NO: 1643-05-75	HWY: USH 14	COUNTY: RICHLAND	CROSS SECTIONS: GUARDRAIL SITE 17 - NW QUADRANT	SHEET 285	E

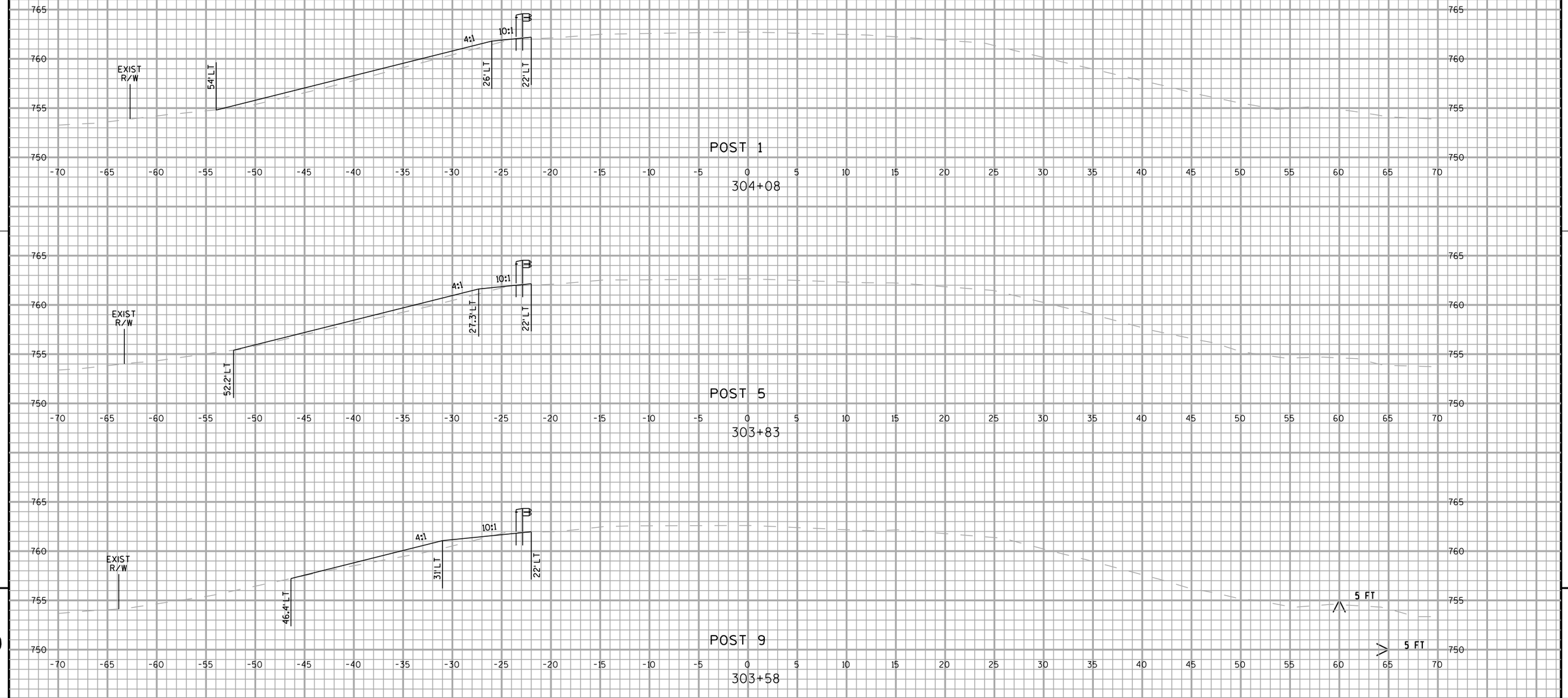

9

9

PROJECT NO: 1643-05-75	HWY: USH 14	COUNTY: RICHLAND	CROSS SECTIONS: GUARDRAIL SITE 17 - NE QUADRANT	SHEET 286 E

FILE NAME : L:\Projects\11099\dwg\090204_xs.dgn PLOT DATE : 11/06/12 PLOT BY : tmoyer PLOT NAME : PLOT SCALE : 1:10

WISDOT/CADDS SHEET 21

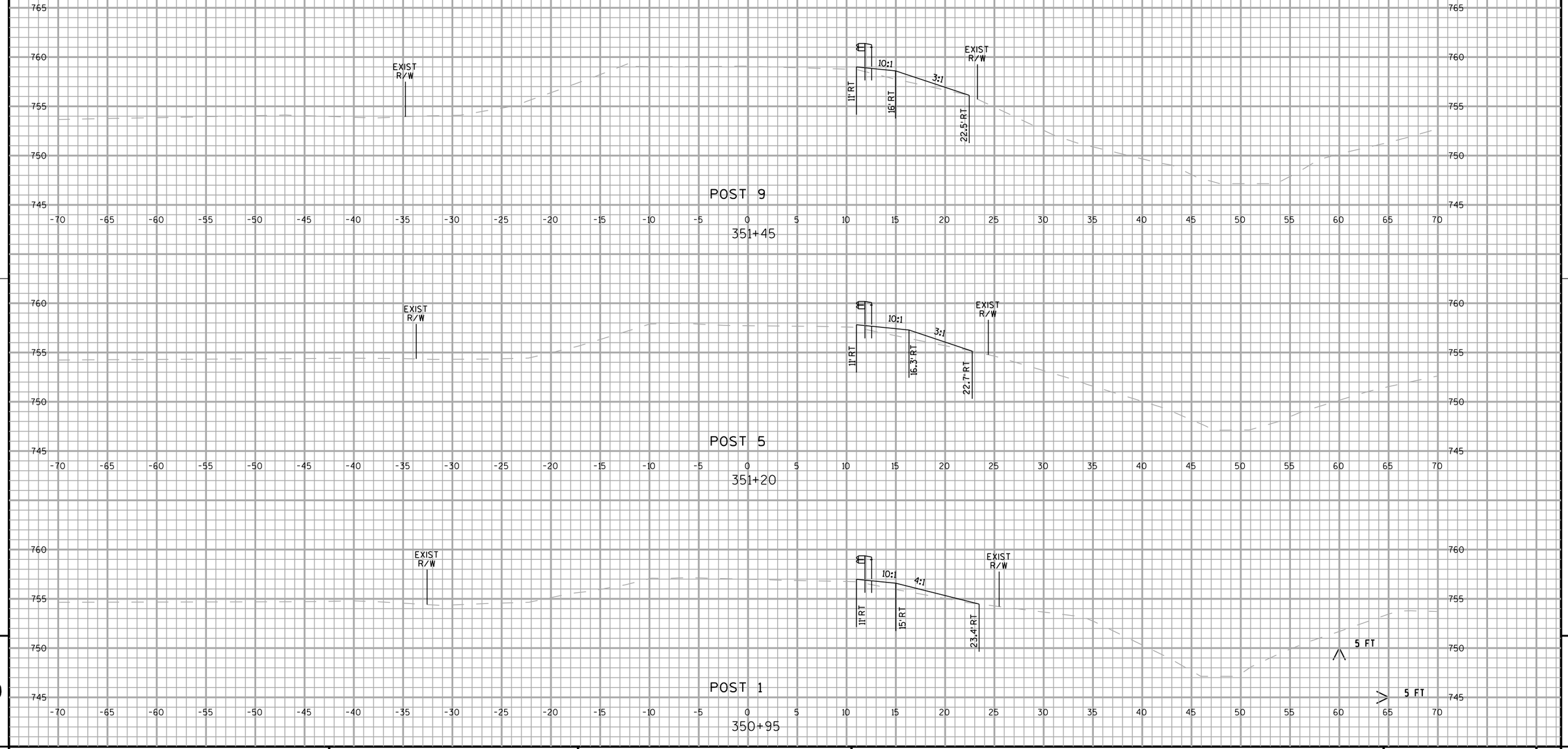

9

9

PROJECT NO: 1643-05-75	HWY: USH 14	COUNTY: RICHLAND	CROSS SECTIONS: GUARDRAIL SITE 17 - SOUTH SIDE	SHEET 287 E

FILE NAME : L:\Projects\11099\dwg\090204_xs.dgn PLOT DATE : 11/06/12 PLOT BY : tmoyer PLOT NAME : PLOT SCALE : 1:10

WISDOT/CADDS SHEET 21

Wisconsin Department of Transportation

Dedicated people creating transportation solutions
through innovation and exceptional service.

http://www.dot.wisconsin.gov