mad

November 2012

PROJECT ID: 1010-00-72

WITH:

COUNTY: DANE

ORDER OF SHEETS

Section No.	1	Title
Section No.	2	Typical Sections and Details
Section No.	3	Estimate of Quantities
Section No.	3	Miscellaneous Quantities
Section No.	4	Right of Way Plat
Section No.	5	Plan and Profile
Section No.	6	Standard Detail Drawings
Section No.	7	Sign Plates
Section No.	8	Structure Plans
Section No.	9	Computer Earthwork Data
Section No.	9	Cross Sections

TOTAL SHEETS = 318

STATE PROJECT	FEDERAL PROJECT	
	PROJECT	CONTRACT
1010-00-72	wisc 2012600	

STATE OF WISCONSIN
DEPARTMENT OF TRANSPORTATION

PLAN OF PROPOSED IMPROVEMENT

MADISON - LAKE DELTON ROAD

(LIEN ROAD - USH 51)

IH 39

DANE COUNTY

STATE PROJECT NUMBER
1010-00-72

N

02

DESIGN DESIGNATION

A.A.D.T. (2013)	=	90,820
A.A.D.T. (2023)	=	103,340
D.H.V.	=	9,200
D.D.	=	50-50
T.	=	24%
DESIGN SPEED	=	65 MPH
ESALS	=	

CONVENTIONAL SYMBOLS

PLAN

CORPORATE LIMITS
PROPERTY LINE
LOT LINE
LIMITED HIGHWAY EASEMENT
EXISTING RIGHT OF WAY
PROPOSED OR NEW R/W LINE
SLOPE INTERCEPT
REFERENCE LINE
EXISTING CULVERT
PROPOSED CULVERT (Box or Pipe)
COMBUSTIBLE FLUIDS — CAUTION
MARSH AREA
WOODED OR SHRUB AREA

PROFILE

GRADE LINE
ORIGINAL GROUND
MARSH OR ROCK PROFILE (To be noted as such) — ROCK
SPECIAL DITCH — LABEL
GRADE ELEVATION — 95.36
CULVERT (Profile View)

UTILITIES

ELECTRIC — E
FIBER OPTIC — FO
GAS — G
SANITARY SEWER — SAN
STORM SEWER — SS
TELEPHONE — T
WATER — W
UTILITY PEDESTAL
POWER POLE
TELEPHONE POLE

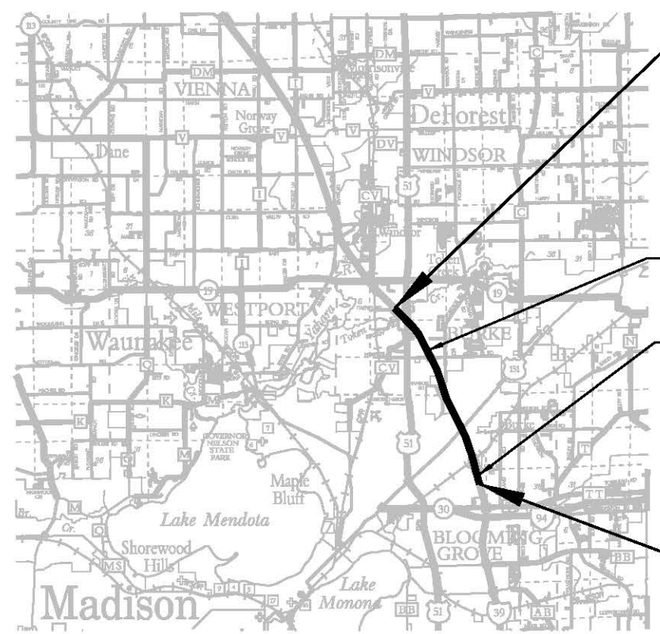

BEGIN PROJECT
STA. 200+00 EB
X = 835,084.65
Y = 522,858.15

STA. 258+98.31 EB BK.=
STA. 259+08.60 EB AH.

STA. 425+73.11 EB BK.=
STA. 425+80.0 EB AH.

END PROJECT
STA. 477+85 EB

LAYOUT
SCALE 0 — 2 MI.

TOTAL NET LENGTH OF CENTERLINE = 5.259 MI.

Alignment and cross-section ground surface data is based on as-built plans and is to be used as reference only. Field survey is limited to drainage structure locations only.

ORIGINAL PLANS PREPARED BY

PEOPLE WHO CARE, CREATING QUALITY TRANSPORTATION TODAY AND TOMORROW

WISDOT SOUTHWEST REGION - MADISON OFFICE

STATE OF WISCONSIN
DEPARTMENT OF TRANSPORTATION

PREPARED BY

Surveyor	
Designer	ERIK NILSON/AMY COUGHLIN
Project Manager	JAN BENNETT
Regional Examiner	
Regional Supervisor	BRENDA SCHOENFELD
C.O. Examiner	JE

APPROVED FOR THE DEPARTMENT

DATE: _____ Brenda Schoenfeld (Signature)

E

2

GENERAL NOTES

HMA PAVEMENT WEIGHT CALCULATIONS ARE BASED ON 110lb/sy/in

THE LOCATIONS OF EXISTING AND PROPOSED UTILITY INSTALLATIONS AS SHOWN ON THE PLANS ARE APPROXIMATE. THERE MAY BE OTHER UTILITY INSTALLATIONS WITHIN THE PROJECT AREA NOT SHOWN.

NO TREES OR SHRUBS ARE TO BE REMOVED WITHOUT APPROVAL OF THE ENGINEER.

ALL COORDINATES SHOWN ON THIS PLAN ARE REFERENCED TO THE WISCONSIN COUNTY COORDINATE SYSTEM - DANE COUNTY.

SECTIONS AS SHOWN ON THE CROSS-SECTIONS INCLUDE THE THICKNESS OF TOPSOIL. TOPSOIL SHALL BE AT A 4-INCH MINIMUM DEPTH.

DISTURBED AREAS WITHIN THE RIGHT-OF-WAY, EXCEPT THE AREAS WITHIN THE FINISHED SHOULDER POINTS, ARE TO BE SEEDED AND MULCHED AS DIRECTED BY THE ENGINEER.

THE CONTRACTOR WILL BE RESPONSIBLE FOR SEEDING ANY PREVIOUSLY GRASSED AREAS WHICH ARE DISTURBED BY HIS OPERATIONS OUTSIDE OF THE NORMAL CONSTRUCTION LIMITS.

PRIOR TO THE PLACEMENT OF GUARDRAIL, THE SHOULDERS SHALL BE PLACED, SHAPED AND COMPACTED.

THE STRUCTURE ATTACHMENT AT EXISTING STRUCTURES SHALL BE CONSIDERED INCIDENTAL TO THE ITEM OF MGS THRIE BEAM TRANSITION.

ESTIMATED QUANTITIES OF SALVAGED TOPSOIL, SEEDING, MULCHING AND FERTILIZER HAVE BEEN COMPUTED BY A DIRECT MEASUREMENT ON THE CROSS-SECTION PLUS FIVE (5) FEET BEYOND THE TOE OF SLOPE.

THE EROSION CONTROL ITEMS SHOWN ON THE PLANS, ARE AT SUGGESTED LOCATIONS. THE ENGINEER SHALL DETERMINE THE EXACT LOCATIONS OF EROSION CONTROL ITEMS. ALL EROSION CONTROL MEASURES SHALL BE MAINTAINED UNTIL SUCH TIME AS THE ENGINEER DETERMINES THE MEASURE IS NO LONGER NECESSARY. THE CONTRACTOR WILL REMOVE ITEMS AT ENGINEER'S DIRECTION.

NUMBER, LOCATION, AND SPACING OF SIGNS AND DEVICES, AS SHOWN IN THE PLANS SHALL BE ADJUSTED TO FIT FIELD CONDITIONS.

THE CONTRACTOR'S PAVING OPERATIONS SHALL BE CONSISTENT WITH THE PLAN TYPICAL SECTIONS AND CONSTRUCTED TO PREVENT HMA LONGITUDINAL JOINTS FROM BEING LOCATED WITHIN A DRIVING, TURNING, PASSING OR PARKING LANE.

EXISTING RAISED PAVEMENT MARKERS ARE TO REMAIN IN PLACE. REMOVE REFLECTORS FROM RAISED PAVEMENT MARKERS. THIS WORK SHALL BE INCIDENTAL TO THE ITEM WARRANTED HMA PAVEMENT OVERLAY MAINLINE.

UTILITY CONTACTS

CARL DONAHUE
AT&T LEGACY - COMMUNICATION LINE
866 ROCK CREEK RD
PLANO IL 60545
847-420-9115
cdonahue@att.com

JASON HOGAN
ALLIANT ENERGY - ELECTRICITY
SUITE 1000
4902 N BILTMORE LANE
MADISON, WI 53718
608-458-4871
jasonhogan@alliantenergy.com

MIKE OLSEN
ATC MANAGEMENT, INC. - ELECTRICITY
801 O'KEEFE RD
PO BOX 6113
DE PERE, WI 54115-6113
920-660-2390
molsen@atcllc.com

JIM BIRKENHEIER
MCLEOD USA TELECOMMUNICATION SERVICES INC - COMMUNICATION LINE
731 N JACKSON ST STE 410
MILWAUKEE, WI 53202
414-207-2986
james.birkenheier@paetec.com

BRANDON STORM
CHARTER COMMUNICATIONS - COMMUNICATION LINE
2701 DANIELS ST
MADISON, WI 53718
608-374-3198
brandon.storm@chartercom.com

JEFFREY BARTOSIAK
WINDSOR SANITARY DISTRICT #1 - SEWER
6716 PARK ST
PO BOX 473
WINDSOR, WI 53598
608-846-7998
wsdno1@merr.com

DENNIS CAWLEY
MADISON WATER UTILITY - WATER
119 E OLIN AVE
MADISON, WI 53713-1431
608-266-4651
dcawley@cityofmadison.com

TIM STATZ
MADISON GAS AND ELECTRIC COMPANY - ELECTRICITY AND GAS
PO BOX 1231
MADISON, WI 53701-1231
608-252-4708
tstatz@mge.com

DEANE BAKER
VILLAGE OF DEFOREST - SEWER & WATER
306 DEFOREST ST
DEFOREST, WI 53532
608-846-6751 EXT 1402
bakerd@vi.deforest.wi.us

ERIC HJELLEN
MADISON METROPOLITAN SEWERAGE DISTRICT - SEWER
1610 MOORLAND RD
MADISON, WI 53713
608-347-3613
erich@madsewer.org

SCOTT GRINDE
AT&T WISCONSIN - COMMUNICATION LINE
221 W WASHINGTON ST, 4TH FLOOR
APPLETON, WI 53911
920-735-3240
sg5813@att.com

JEFF MADSON
WISCONSIN DEPARTMENT OF TRANSPORTATION - COMMUNICATION LINE
STE 300
433 W ST PAUL AVE
MILWAUKEE, WI 53203-3007
414-225-3723
jeffrey.madson@dot.wi.gov

WI DEPARTMENT OF NATURAL RESOURCES LIAISON

Eric Heggelund
3911 Fish Hatchery Road
Fitchburg, WI 53711-5397
(608)275-3301
Eric.Heggelund@Wisconsin.gov

DIGGERS HOTLINE

Call 811 3 Work Days Before You Dig
or Toll Free (800) 242-8511
Hearing Impaired TDD (800) 542-2289
www.DiggersHotline.com

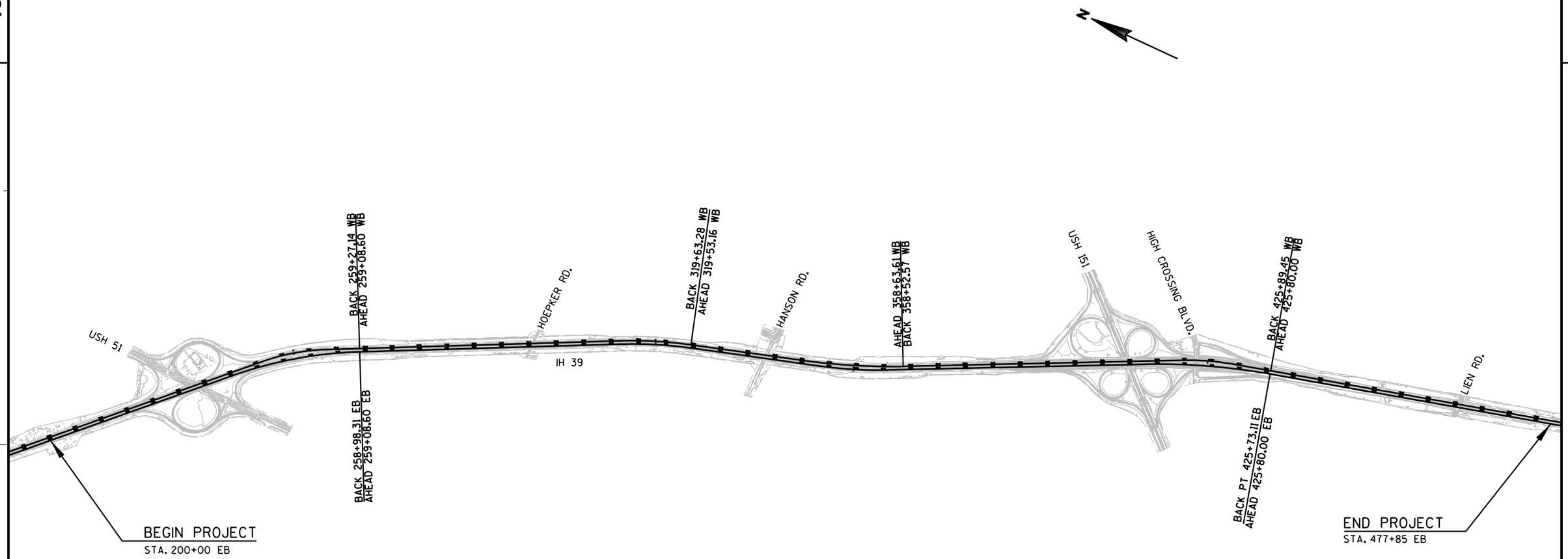

PROJECT NO:1010-00-72	HWY:IH 39	COUNTY:DANE	PROJECT OVERVIEW	SHEET	E

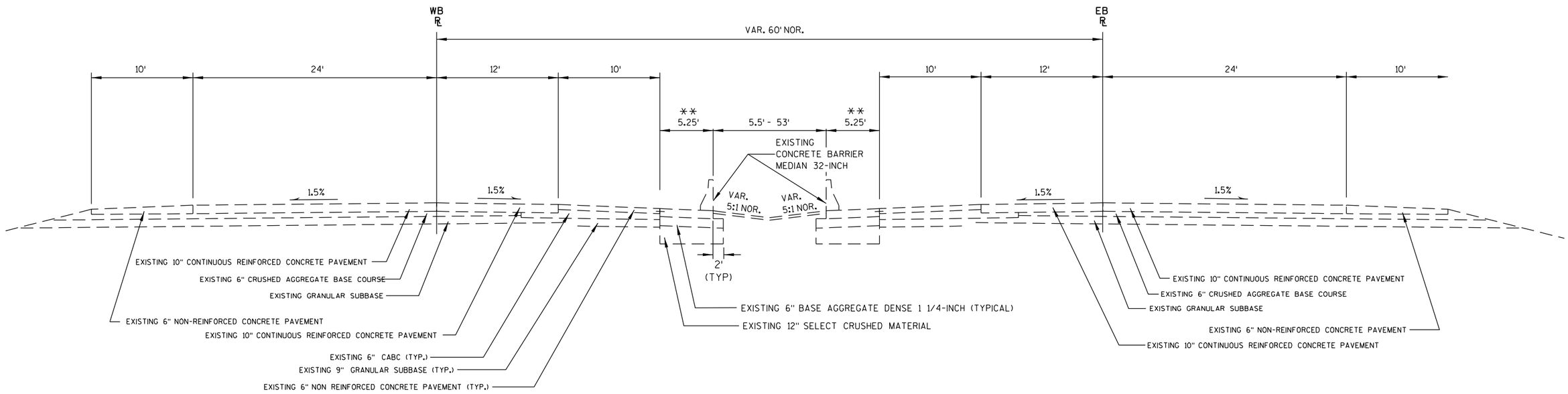

** VARIES AT BARRIER WALL TAPER TRANSITION LOCATIONS.

TYPICAL EXISTING SECTION

STA. 200+00 EB TO STA. 259+14 EB
STA. 271+17 EB TO STA. 358+03 EB
STA. 405+19 EB TO STA. 433+05 EB
STA. 448+08 EB TO STA. 476+92 EB

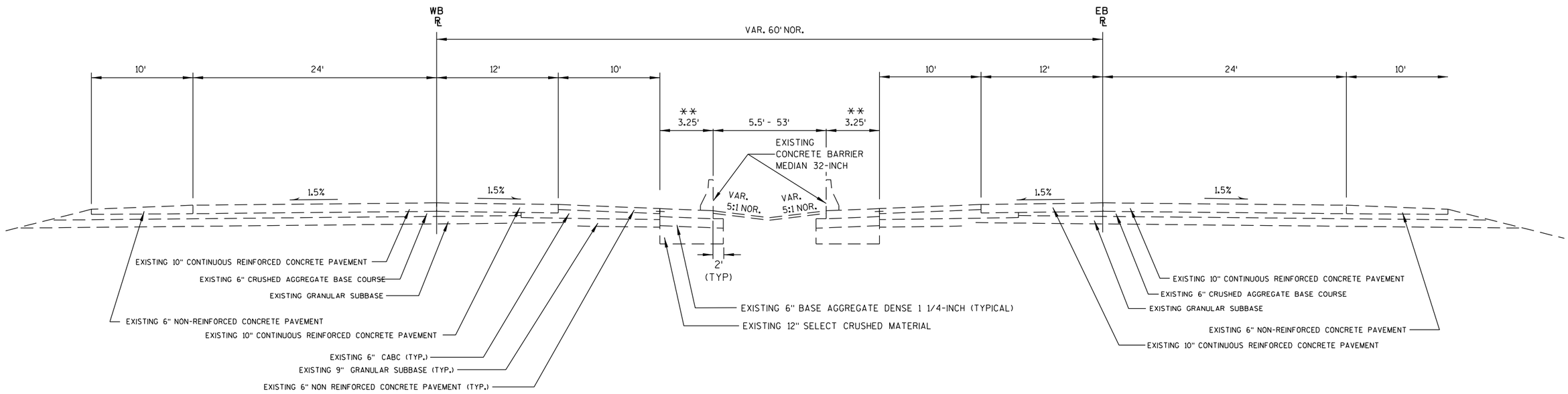

** VARIES AT BARRIER WALL TAPER TRANSITION LOCATIONS.

TYPICAL EXISTING SECTION

STA. 259+14 EB TO STA. 271+17 EB
STA. 358+03 EB TO STA. 405+19 EB
STA. 433+05 EB TO STA. 448+08 EB
STA. 476+92 EB TO STA. 477+85 EB

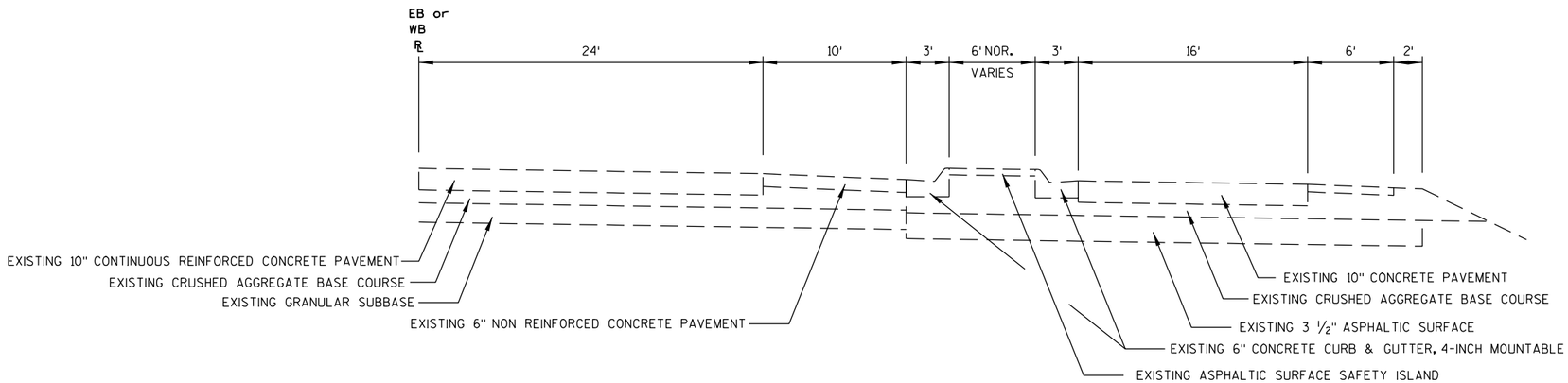

TYPICAL EXISTING SECTION

STA. 381+15 EB TO STA. 385+00 EB
STA. 412+88 EB TO STA. 416+07 EB
STA. 378+50 WB TO STA. 391+98 WB
STA. 416+00 WB TO STA. 424+76 WB

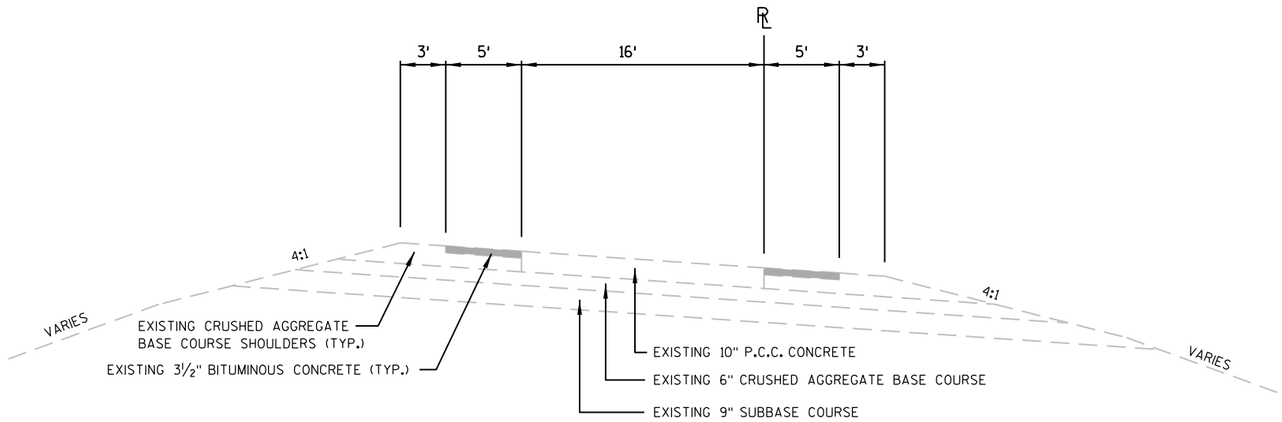

TYPICAL EXISTING SECTION

RAMPS WITHOUT CURB & GUTTER

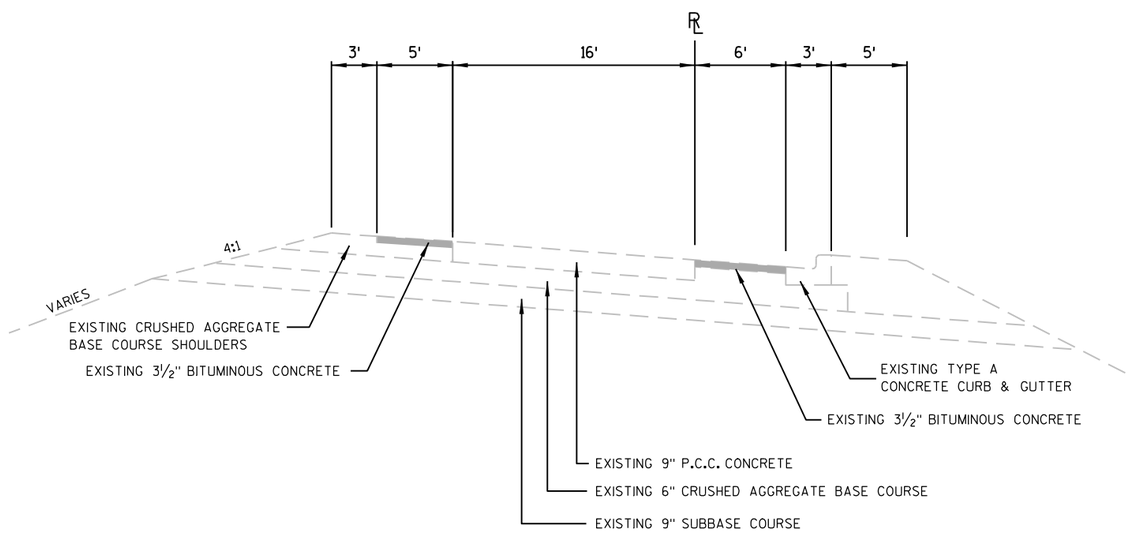

TYPICAL EXISTING SECTION

RAMPS WITH CURB ON ONE SIDE

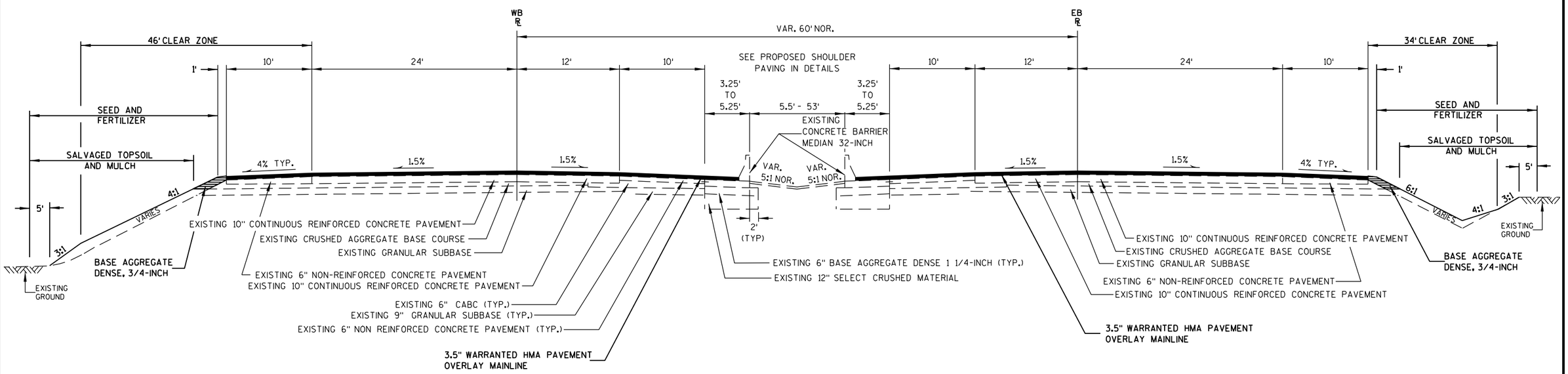

TYPICAL FINISHED SECTION

STA. 200+00 EB TO STA. 477+85 EB

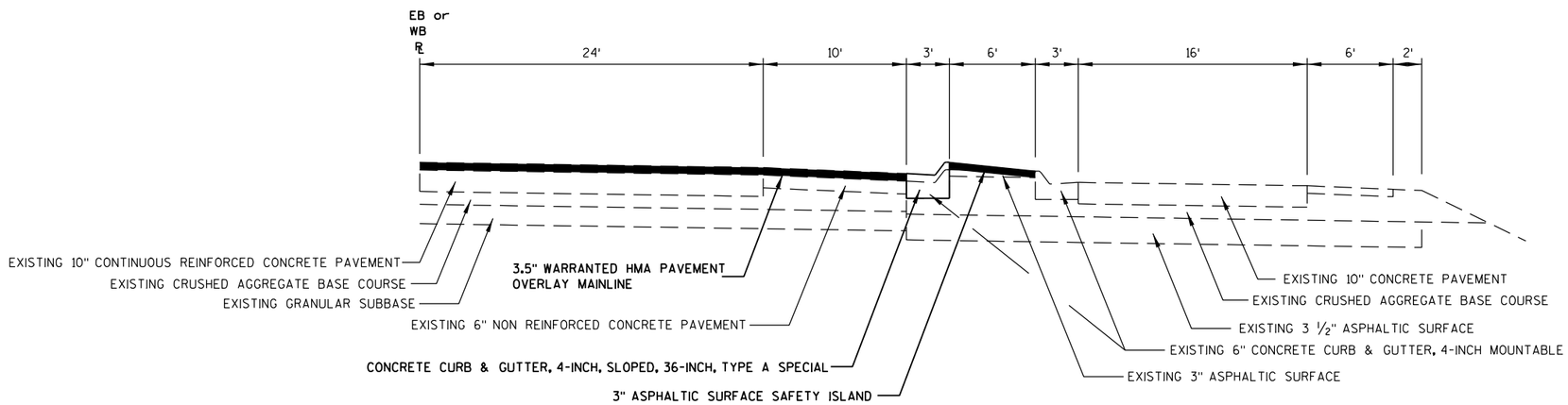

TYPICAL FINISHED SECTION

STA. 381+15 EB TO STA. 385+00 EB
STA. 412+88 EB TO STA. 416+07 EB
STA. 378+50 WB TO STA. 391+98 WB
STA. 416+00 WB TO STA. 424+76 WB

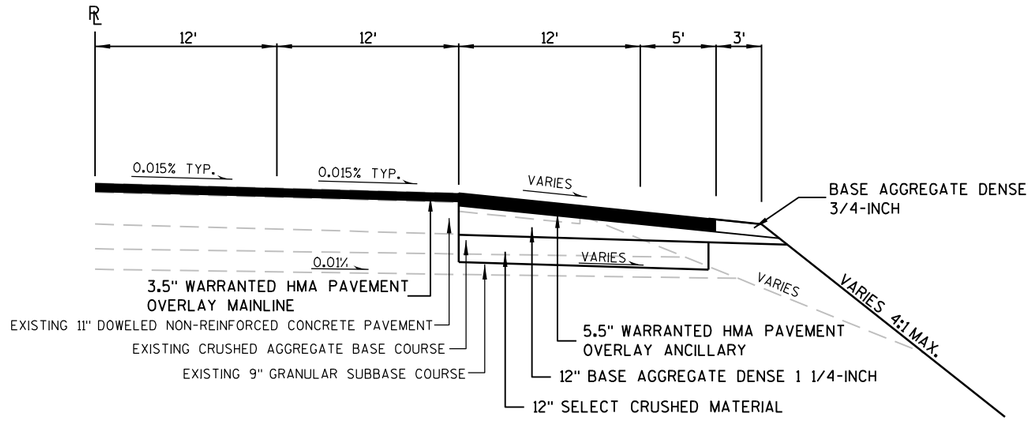

TYPICAL FINISHED SECTION
FOR RAMP EXTENSIONS

STA. 209+51.55 EB - STA. 213+80 EB RT.
STA. 241+66.31 WB - STA. 247+36.31 WB LT.

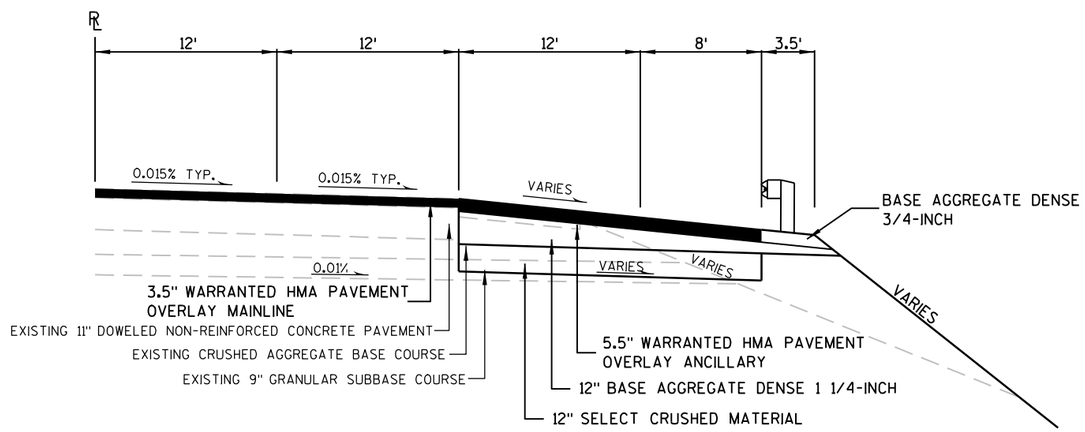

TYPICAL FINISHED SECTION
FOR RAMP EXTENSIONS

STA. 213+80 EB - STA. 215+21.55 EB RT.

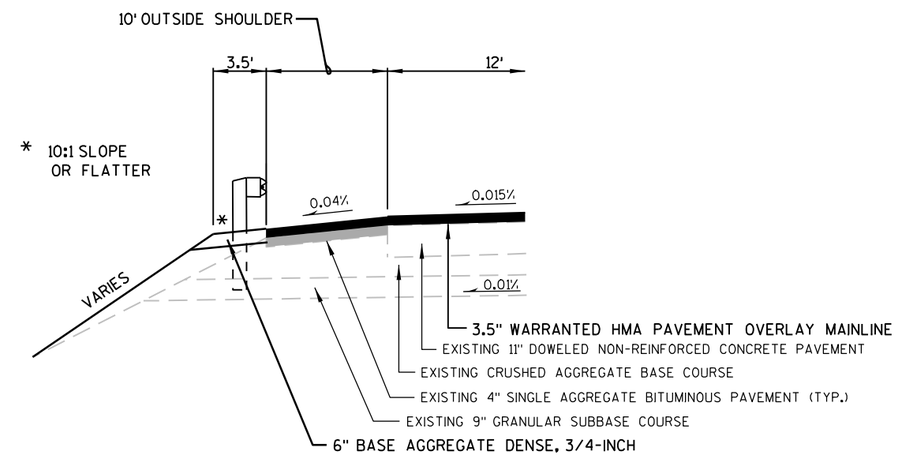

DETAIL FOR WIDENING FOR BEAM GUARD INSTALLATION

PROJECT NO:1010-00-72	HWY:IH 39	COUNTY:DANE	TYPICAL SECTIONS	SHEET	E

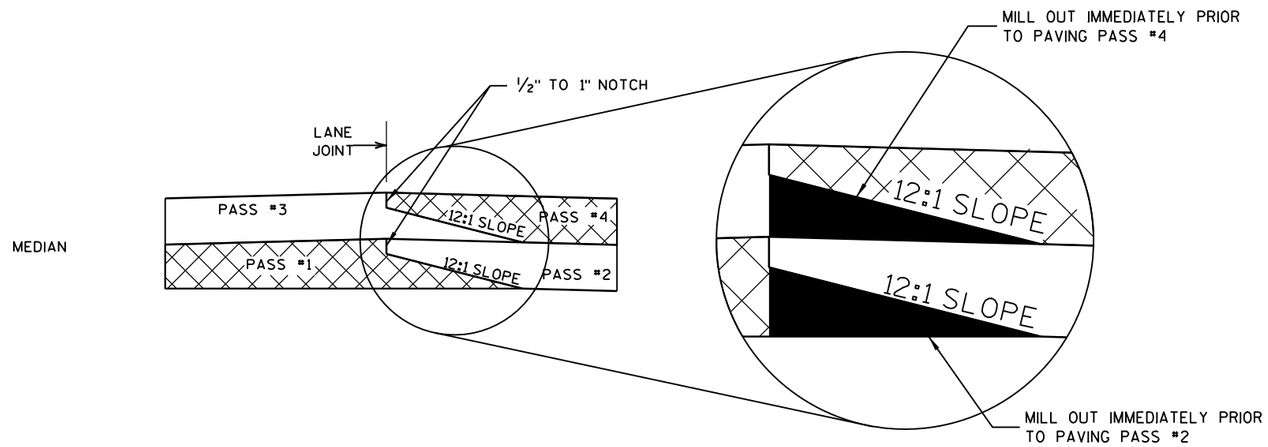

TYPICAL PAVEMENT CROSS SECTIONS OF TAPERED & NOTCHED LONGITUDINAL JOINTS

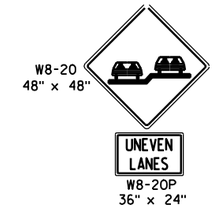

NOTE: TO BE UTILIZED FOR TEMPORARY INSTALLATIONS IN WORK AREAS INVOLVING PAVING LONGITUDINAL JOINTS (SEE W8-20)

UNEVEN LANES SIGNS SHALL BE PLACED AT THE BEGINNING OF JOINT AND AT ½ MILE INCREMENTS.

SIGNS WILL BE PAID AS TRAFFIC CONTROL. SIGNS.

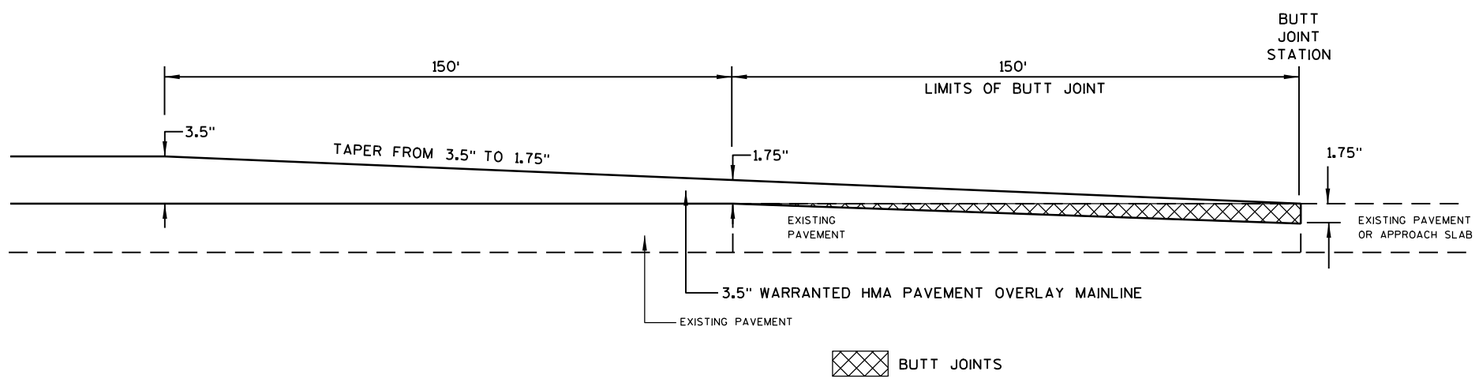

BUTT JOINT DETAIL

EB LANE LOCATIONS	WB LANE LOCATIONS
STA. 200+00 EB	STA. 200+00 WB
STA. 225+72 EB	STA. 225+75 WB
STA. 230+94 EB	STA. 230+94 WB
STA. 398+04 EB	STA. 397+94 WB
STA. 401+25 EB	STA. 400+94 WB
STA. 445+94 EB	STA. 445+55 WB
STA. 448+00 EB	STA. 447+72 WB
STA. 459+00 EB	STA. 459+00 WB
STA. 462+50 EB	STA. 463+00 WB
STA. 477+85 EB	STA. 477+85 WB

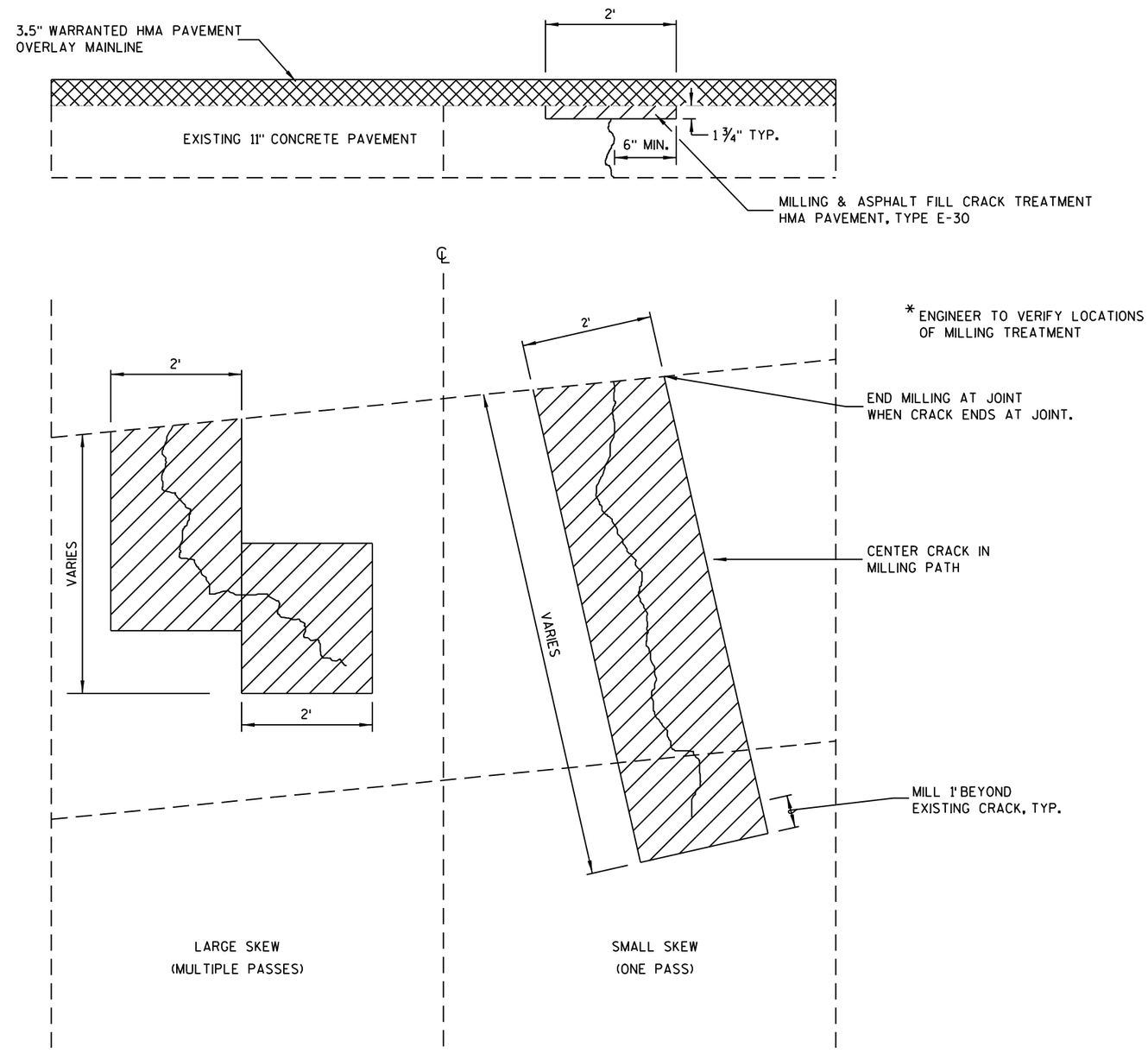

MILLING & ASPHALT FILL CRACK TREATMENT DETAIL

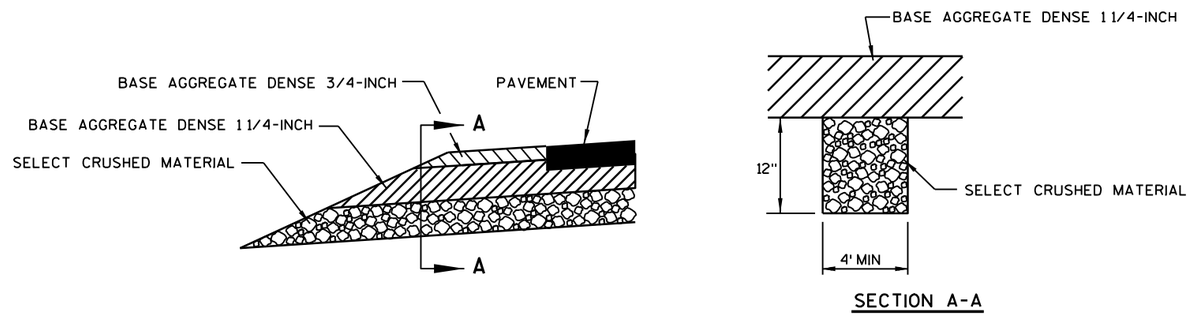

SECTION A-A

EXCAVATION REQUIRED TO CONSTRUCT FRENCH DRAINS SHALL
BE CONSIDERED INCIDENTAL TO THE ITEM SELECT CRUSHED MATERIAL.

DETAIL FOR FRENCH DRAINS

STA. 212+00 EB RT.

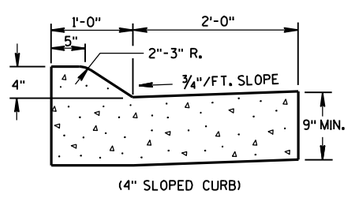

CONCRETE CURB & GUTTER 4-INCH SLOPED 36-INCH TYPE A SPECIAL

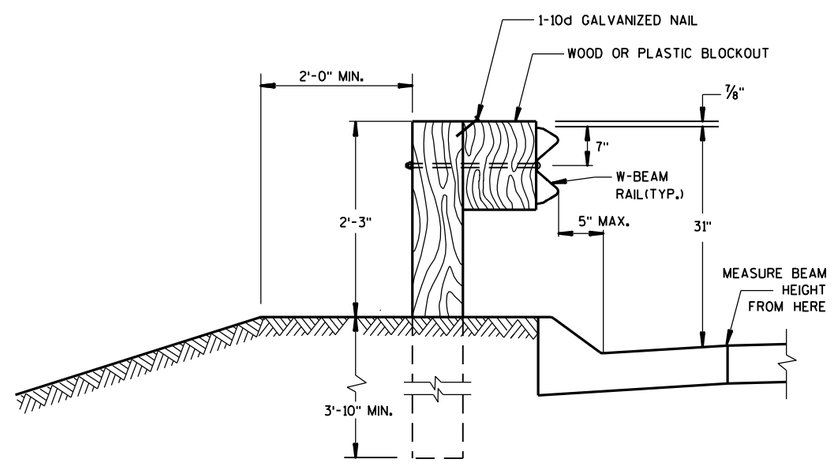

MGS GUADRAIL LOCATED ALONG A MOUNTABLE CURBED ROADWAY

NOTES:
ALL WORK AND MATERIALS SHALL BE IN ACCORDANCE WITH STANDARD SPECIFICATION.

ALL MATERIAL TO BE APPROVED BY ENGINEER BEFORE INSTALLATION.

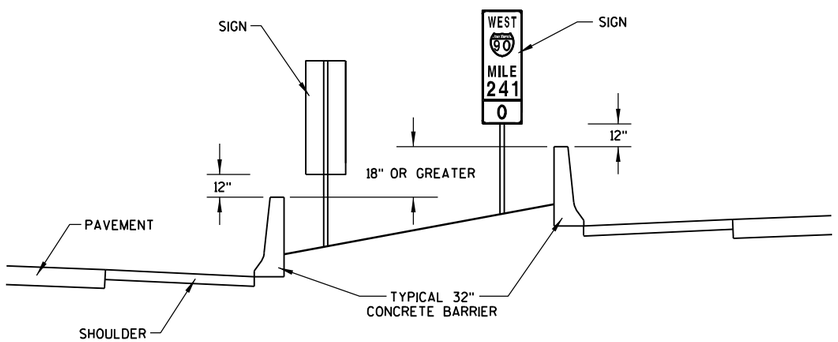

ELEVATION DIFFERENCE GREATER THAN 18"

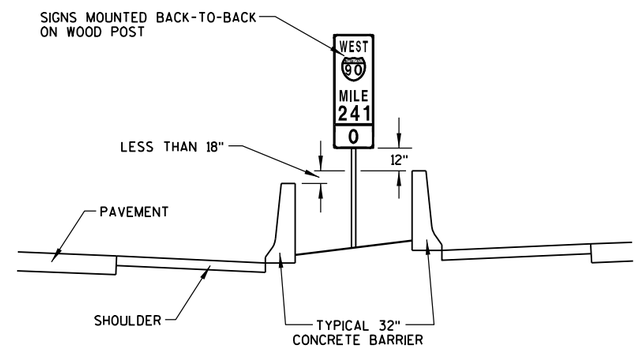

ELEVATION DIFFERENCE LESS THAN 18"

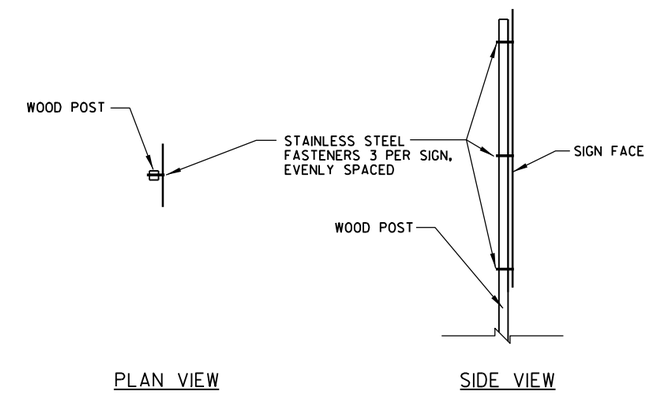

GALVANIZED STEEL OR WOOD POST

SIGN MOUNTING DETAILS IN DOUBLE MEDIAN BARRIER AREAS FOR ENHANCED REFERENCE MARKERS

2

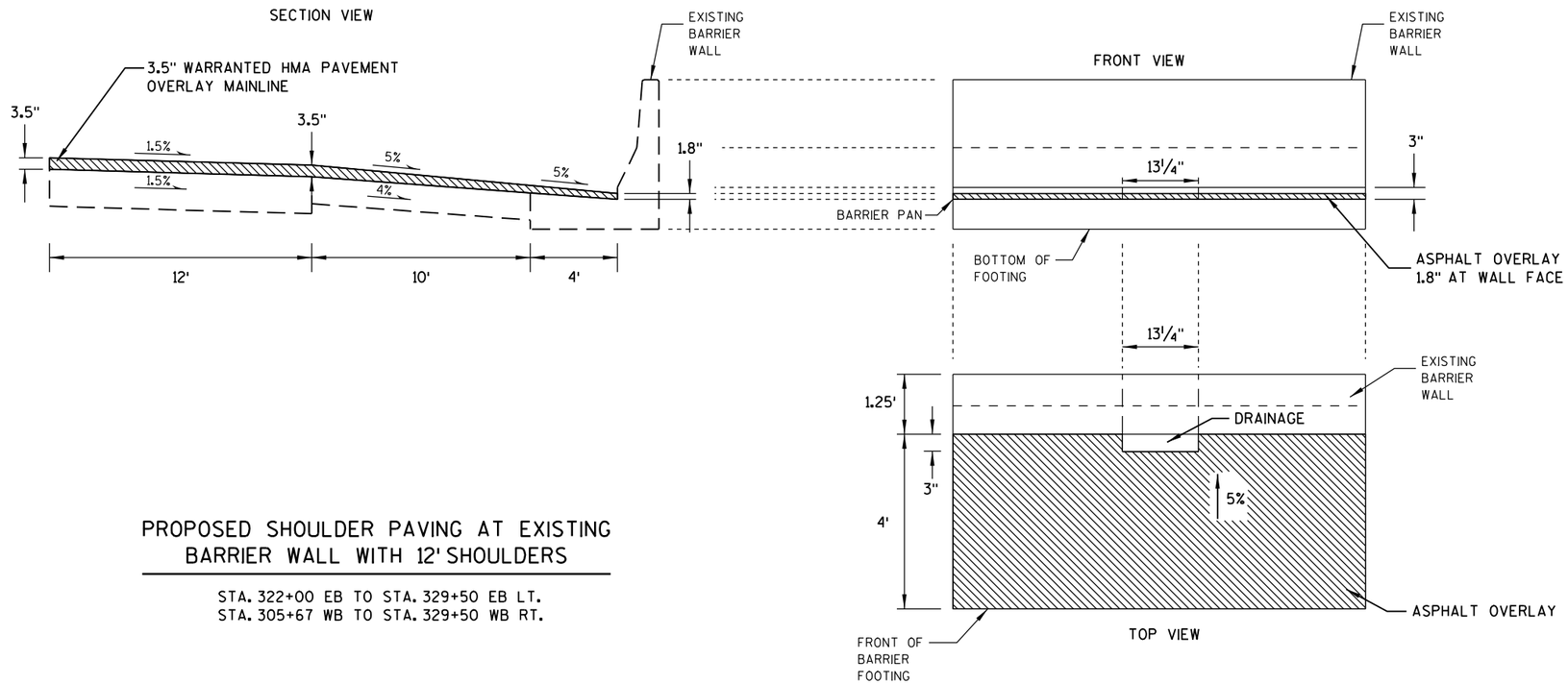

PROPOSED SHOULDER PAVING AT EXISTING BARRIER WALL WITH 12' SHOULDERS

STA. 322+00 EB TO STA. 329+50 EB LT.
STA. 305+67 WB TO STA. 329+50 WB RT.

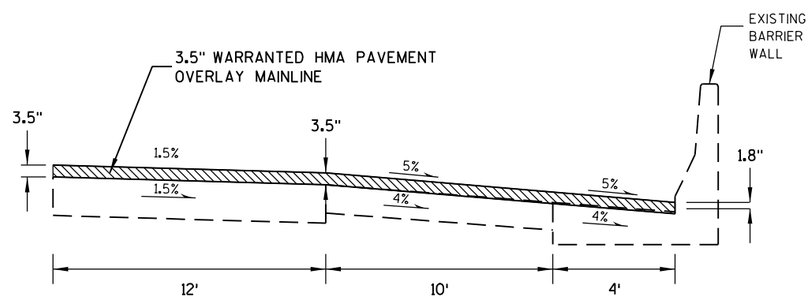

PROPOSED SHOULDER PAVING AT EXISTING BARRIER WALL WITH 12' SHOULDERS

PROJECT NO:1010-00-72	HWY:IH 39	COUNTY:DANE	CONSTRUCTION DETAILS	SHEET	E

2

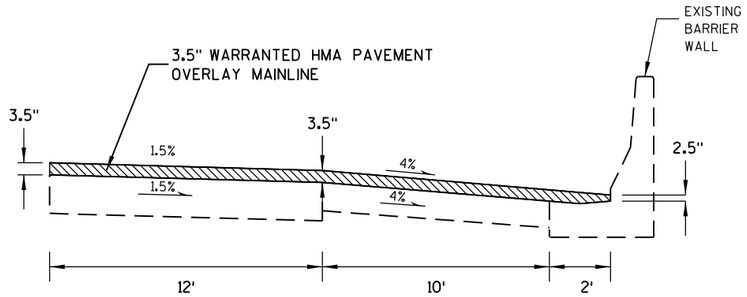

PROPOSED SHOULDER PAVING AT EXISTING BARRIER WALL WITH 10' SHOULDERS

STA. 259+14 EB TO STA. 271+17 EB LT.
STA. 259+13 WB TO STA. 271+08 WB RT.
STA. 358+03 EB TO STA. 405+19 EB LT.
STA. 357+84 WB TO STA. 405+25 WB RT.
STA. 386+10 EB TO STA. 412+88 EB RT.
STA. 392+00 WB TO STA. 413+80 WB LT.
STA. 433+05 EB TO STA. 445+94 EB LT.
STA. 433+08 WB TO STA. 445+55 WB RT.

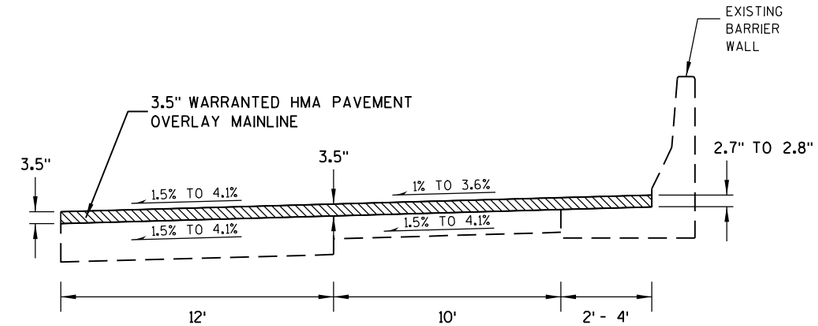

PROPOSED SHOULDER PAVING AT EXISTING BARRIER WALL ON THE HIGH SIDE OF SUPERELEVATION

(FLATTEN CROSS-SLOPE ON SHOULDER BY 0.5%)

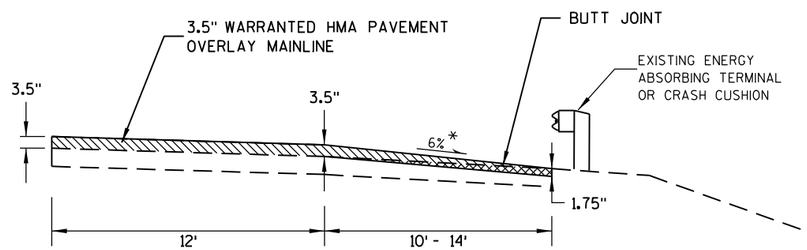

* SLOPE SHOULDER TO MATCH INTO EXISTING ELEVATION AT FACE OF BEAM GUARD OR CRASH CUSHION

BUTT JOINT AND ASPHALTIC PAVEMENT

PROPOSED SHOULDER PAVING AT EXISTING ENERGY ABSORBING TERMINALS AND CRASH CUSHIONS

STA. 217+50 EB TO STA. 218+00 EB RT.
STA. 238+50 WB TO STA. 239+00 WB LT.
STA. 249+25 EB TO STA. 251+60 EB LT.
STA. 249+46 WB TO STA. 251+83 WB RT.
STA. 287+65 EB TO STA. 289+74 EB RT.
STA. 351+40 EB TO STA. 353+76 EB LT.
STA. 351+33 WB TO STA. 353+69 WB RT.
STA. 385+00 EB TO STA. 386+10 EB RT.
STA. 413+80 WB TO STA. 415+00 WB LT.
STA. 414+36 EB TO STA. 416+70 EB LT.
STA. 414+46 WB TO STA. 416+82 WB RT.
STA. 424+76 WB TO STA. 426+00 WB LT.

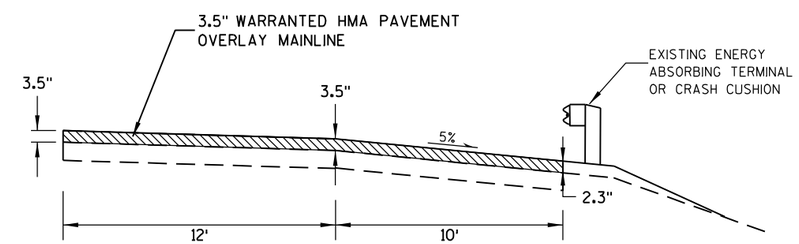

PROPOSED SHOULDER PAVING AT EXISTING BEAM GUARD LOCATIONS

STA. 218+25 WB TO STA. 225+57 WB LT.
STA. 218+00 EB TO STA. 220+80 EB RT.
STA. 230+94 EB TO STA. 238+40 EB RT.
STA. 236+20 WB TO STA. 238+50 WB LT.
STA. 372+00 WB TO STA. 375+00 WB LT.
STA. 453+50 EB TO STA. 459+00 EB RT.
STA. 453+65 WB TO STA. 459+00 WB LT.

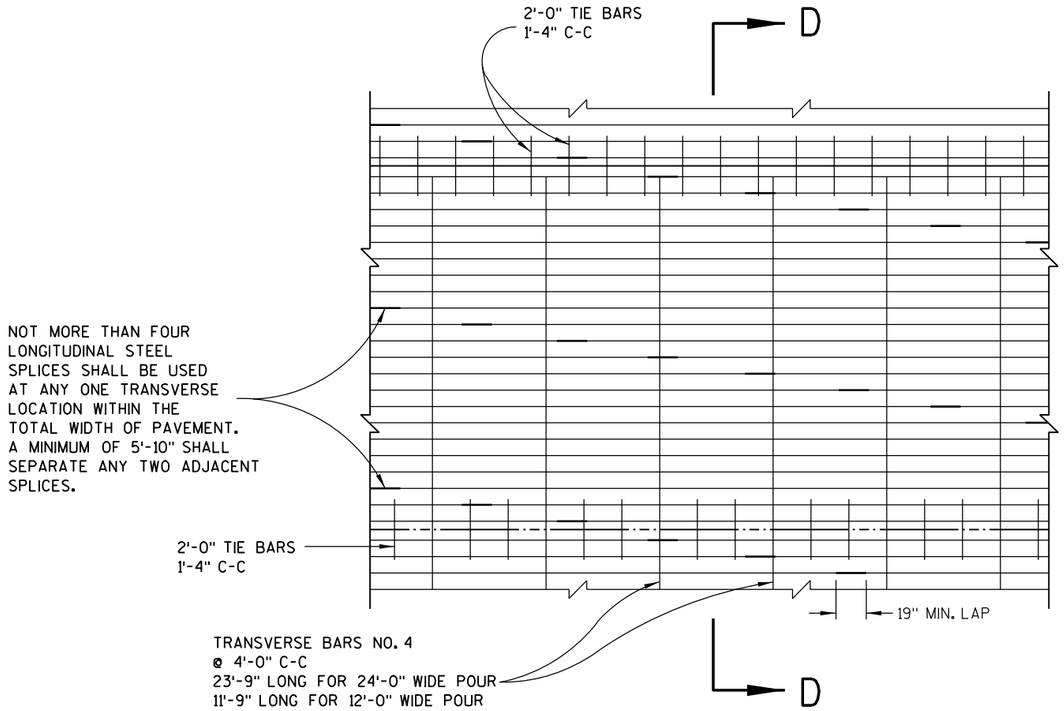

PLAN VIEW
REINFORCEMENT STEEL PLACEMENT

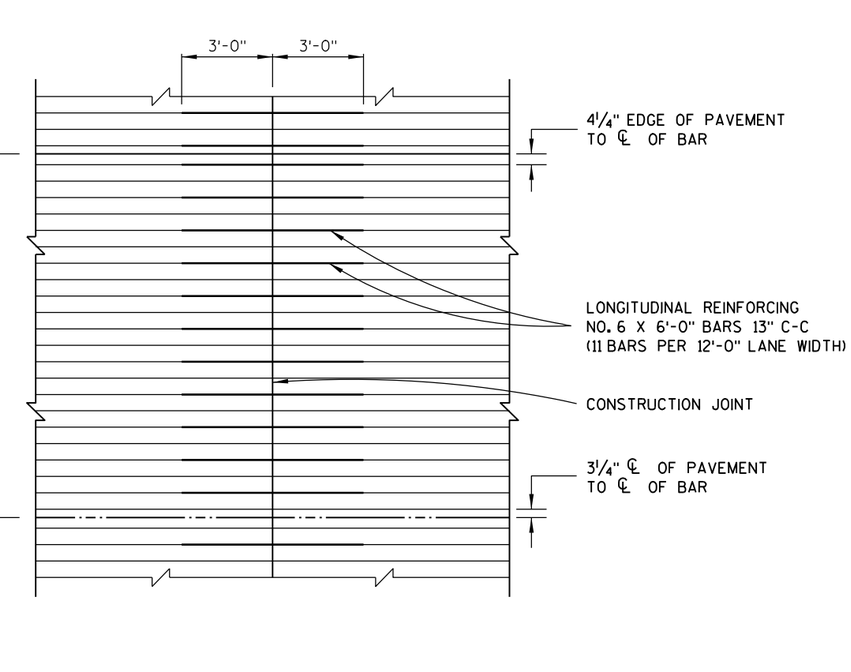

PLAN VIEW
CONSTRUCTION JOINT

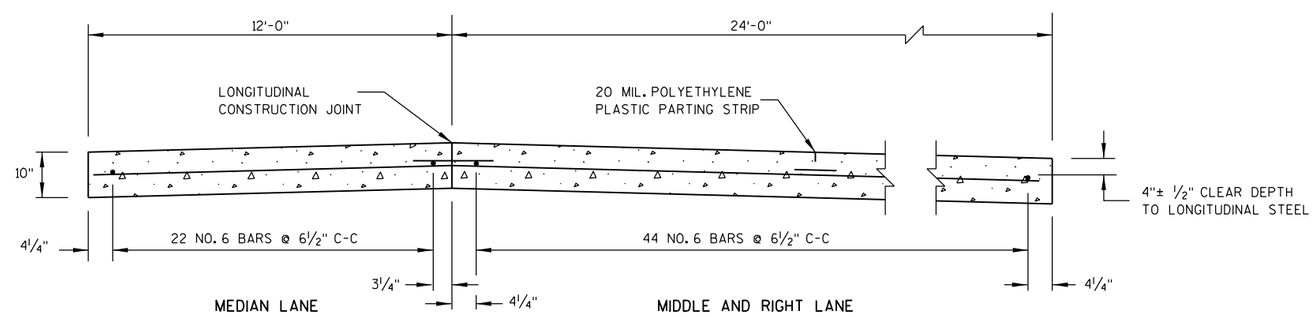

SECTION D-D

EXISTING CONTINUOSLY REINFORCED CONCRETE PAVEMENT

2

BUTT JOINT LOCATION

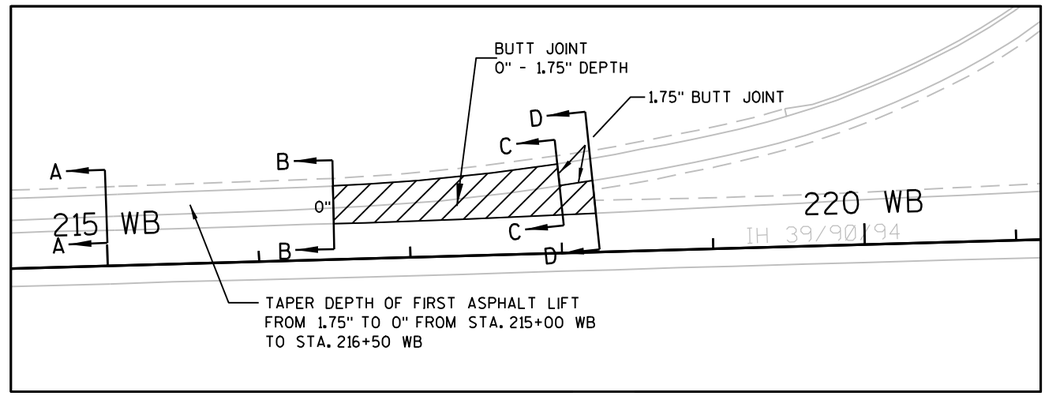

SECTION A - A

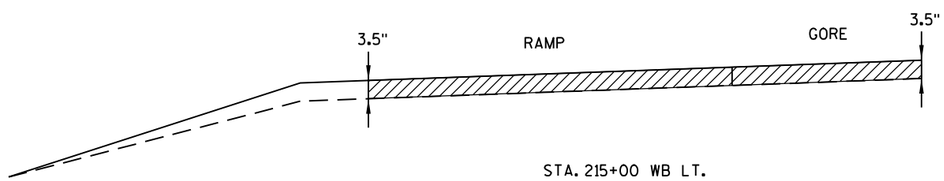

STA. 215+00 WB LT.

SECTION C - C

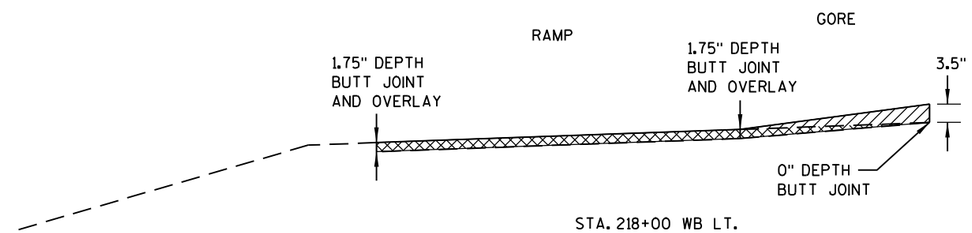

STA. 218+00 WB LT.

ASPHALTIC PAVEMENT

BUTT JOINT AND
ASPHALTIC PAVEMENT

SECTION B - B

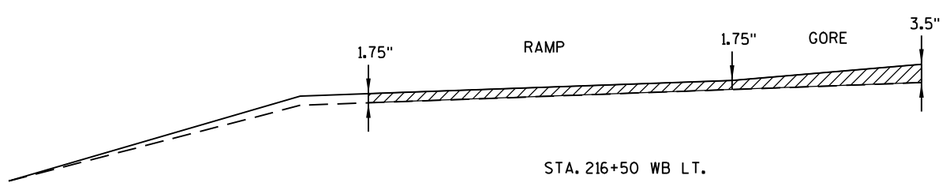

STA. 216+50 WB LT.

SECTION D - D

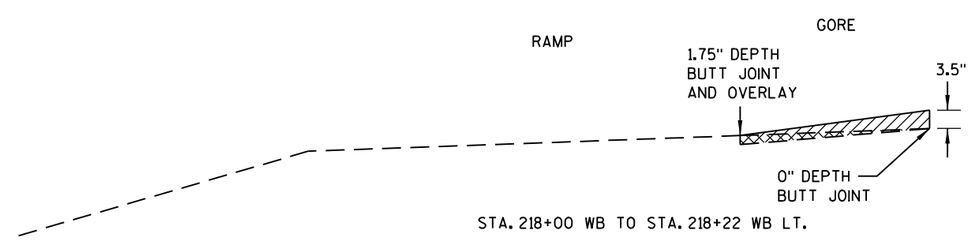

STA. 218+00 WB TO STA. 218+22 WB LT.

BUTT JOINT AND OVERLAY DETAIL

STA. 215+00 WB TO STA. 218+22 WB

PROJECT NO: 1010-00-72	HWY: IH 39	COUNTY: DANE	CONSTRUCTION DETAILS	SHEET	E

2

BUTT JOINT LOCATION

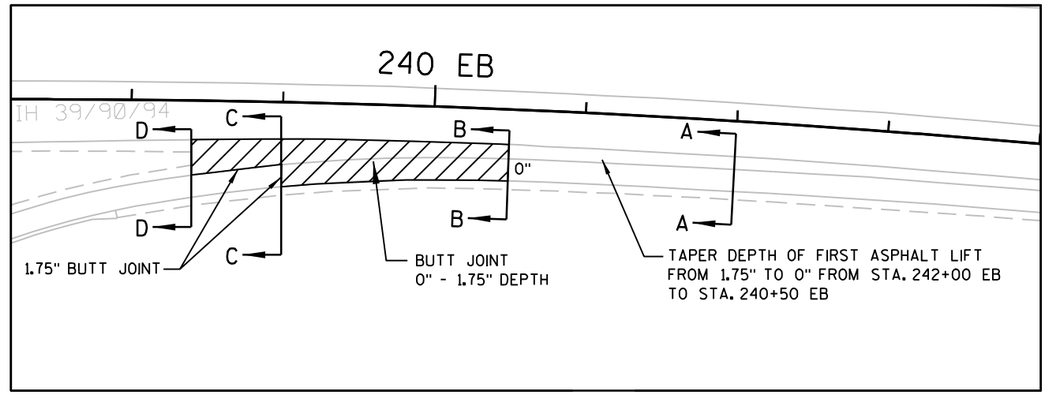

D - D

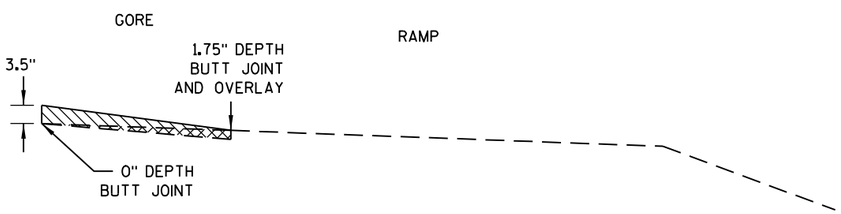

STA. 238+10 EB TO STA. 239+00 EB RT.

SECTION
B - B

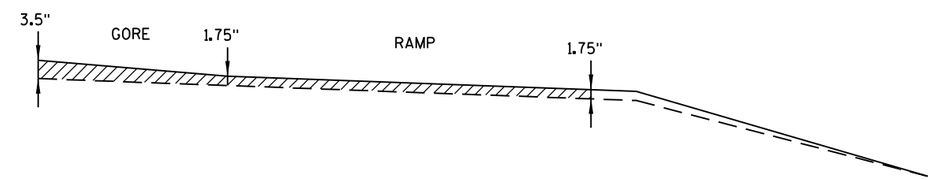

STA. 240+50 EB RT.

ASPHALTIC PAVEMENT

BUTT JOINT AND
ASPHALTIC PAVEMENT

SECTION
C - C

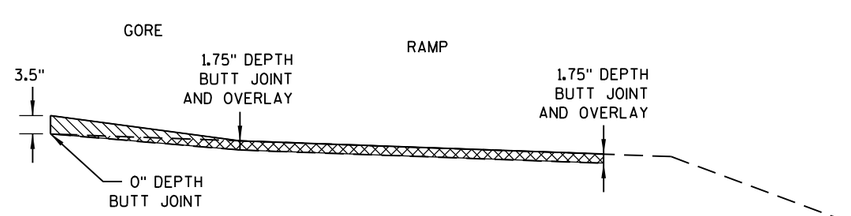

STA. 239+00 EB RT.

SECTION
A - A

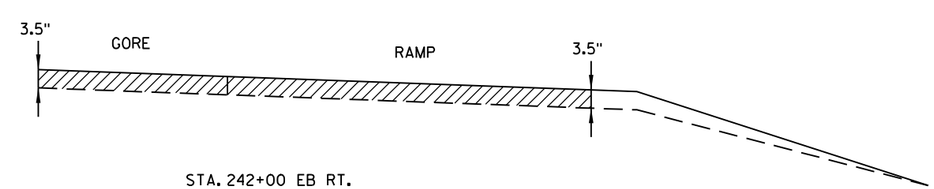

STA. 242+00 EB RT.

BUTT JOINT AND OVERLAY DETAIL

STA. 238+10 EB TO STA. 242+00 EB

PROJECT NO:1010-00-72	HWY:IH 39	COUNTY:DANE	CONSTRUCTION DETAILS	SHEET	E

2

BUTT JOINT LOCATION

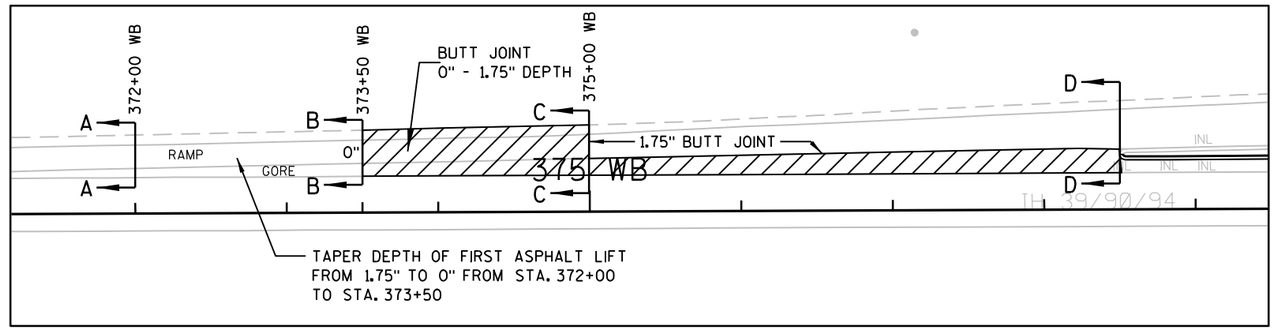

SECTION A - A

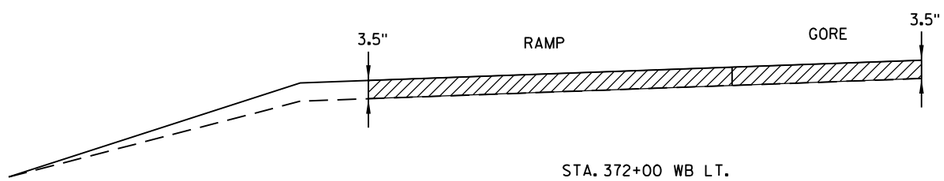

STA. 372+00 WB LT.

SECTION C - C

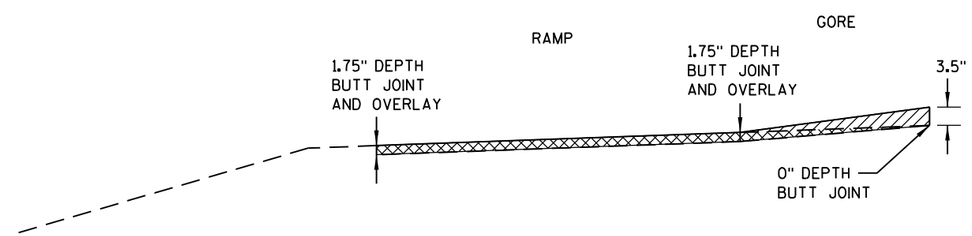

STA. 375+00 WB LT.

ASPHALTIC PAVEMENT

BUTT JOINT AND ASPHALTIC PAVEMENT

SECTION B - B

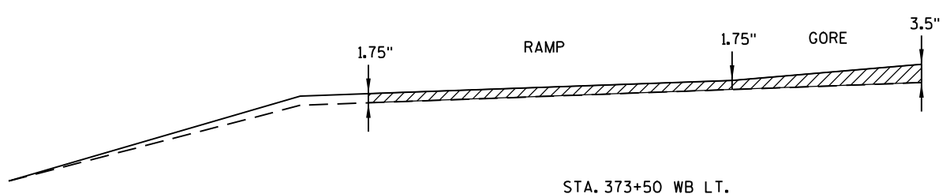

STA. 373+50 WB LT.

SECTION D - D

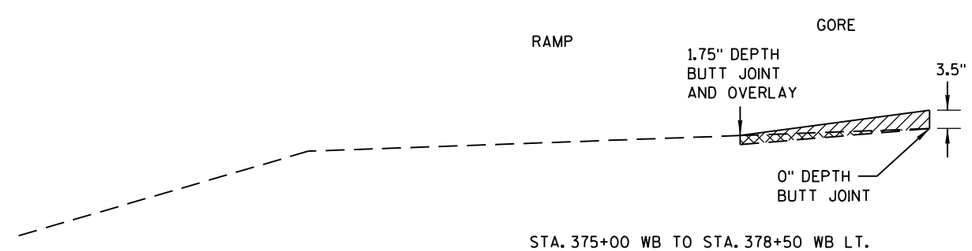

STA. 375+00 WB TO STA. 378+50 WB LT.

BUTT JOINT AND OVERLAY DETAIL

STA. 372+00 WB TO STA. 378+50 WB

2

BUTT JOINT LOCATION

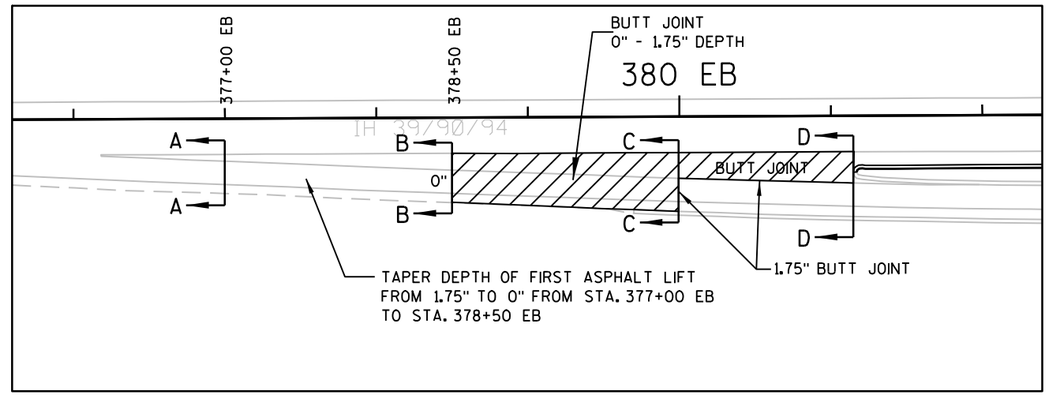

SECTION A - A

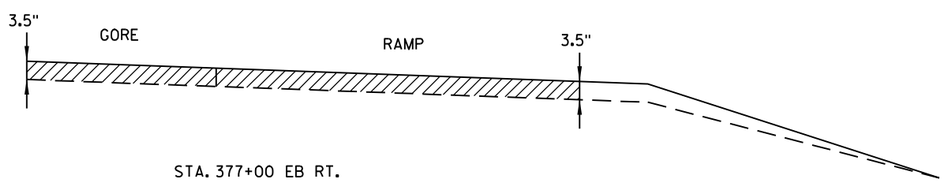

STA. 377+00 EB RT.

SECTION C - C

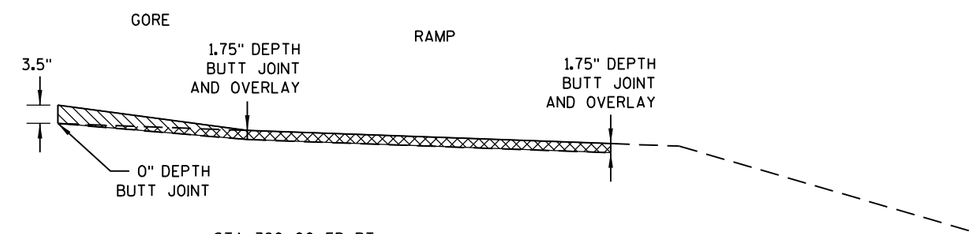

STA. 380+00 EB RT.

ASPHALTIC PAVEMENT

BUTT JOINT AND ASPHALTIC PAVEMENT

SECTION B - B

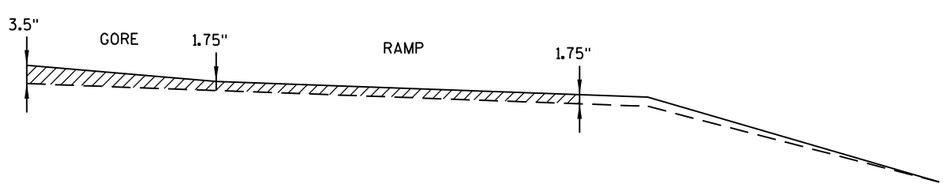

STA. 378+50 EB RT.

SECTION D - D

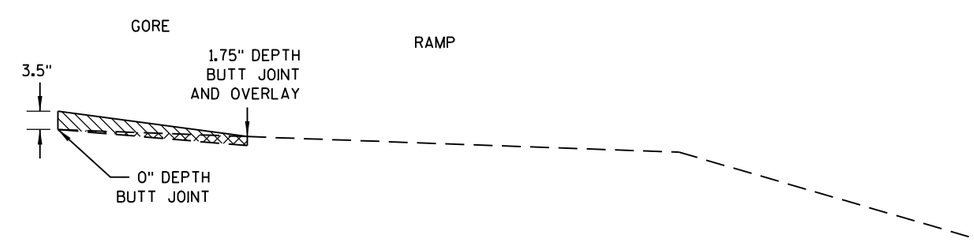

STA. 380+00 TO STA.381+15 EB RT.

BUTT JOINT AND OVERLAY DETAIL

STA. 377+00 EB TO STA. 381+15 EB

PROJECT NO:1010-00-72	HWY:IH 39	COUNTY:DANE	CONSTRUCTION DETAILS	SHEET	E

2

2

BUTT JOINT LOCATION

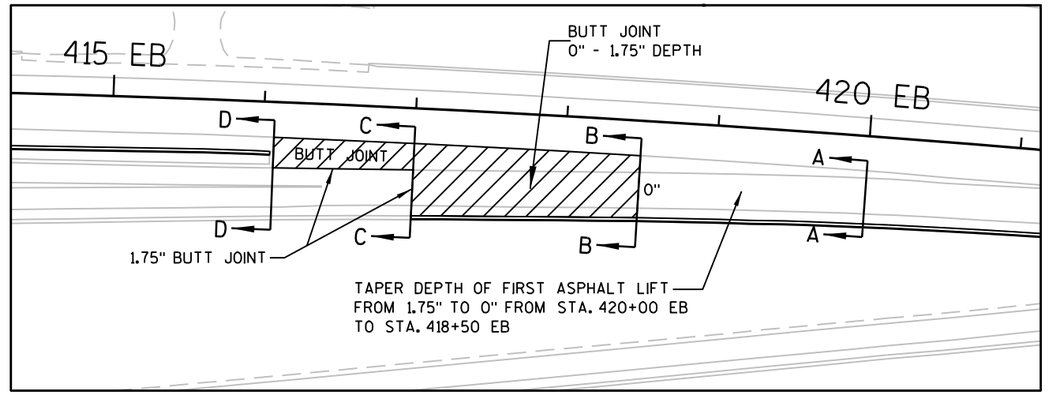

SECTION
D - D

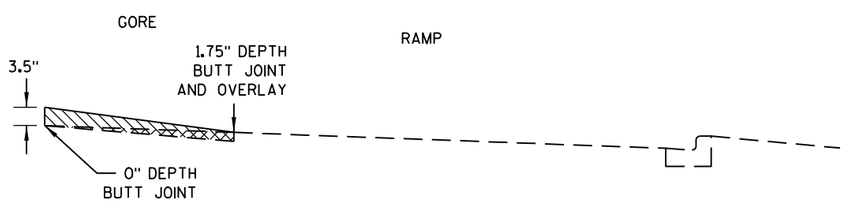

STA. 416+07 TO STA. 417+00 EB RT.

SECTION
B - B

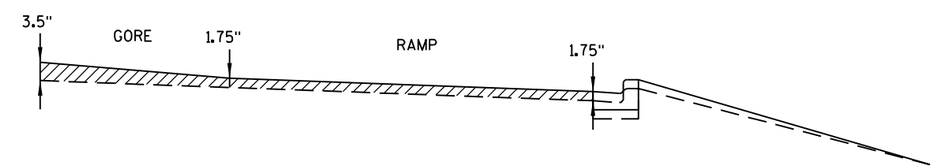

STA. 418+50 EB RT.

ASPHALTIC PAVEMENT

BUTT JOINT AND
ASPHALTIC PAVEMENT

SECTION
C - C

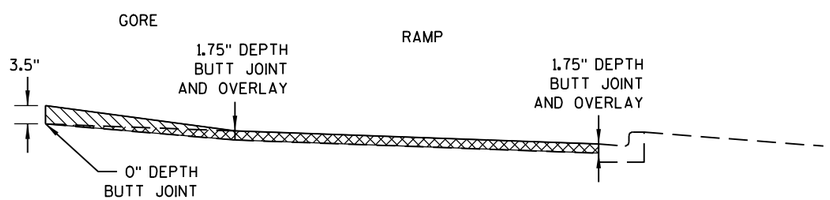

STA. 417+00 EB RT.

SECTION
A - A

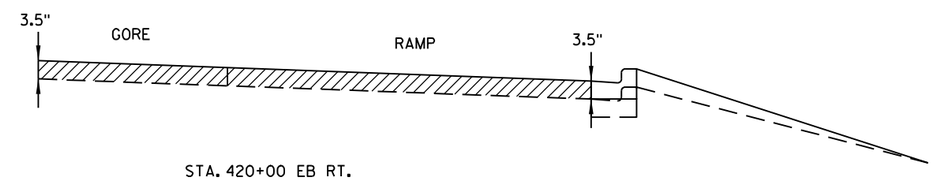

STA. 420+00 EB RT.

BUTT JOINT AND OVERLAY DETAIL

STA. 416+07 EB TO STA. 420+00 EB

PROJECT NO:1010-00-72	HWY:IH 39	COUNTY:DANE	CONSTRUCTION DETAILS	SHEET	E

2

BUTT JOINT LOCATION

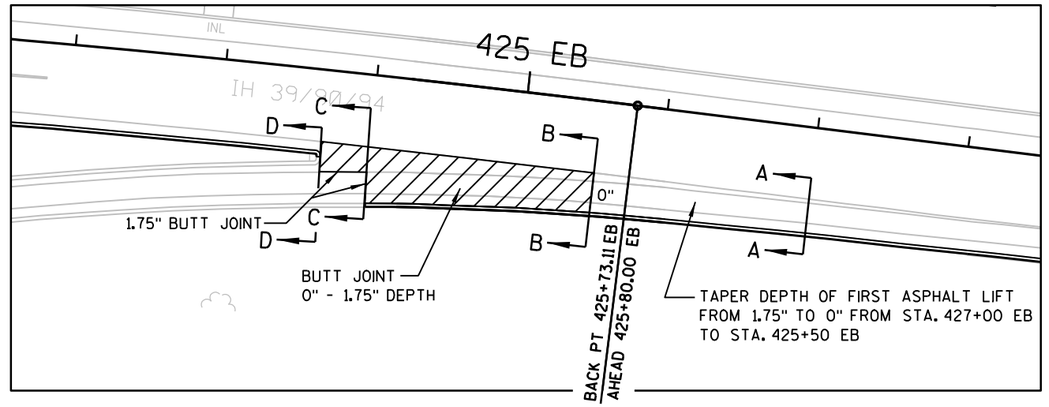

SECTION D - D

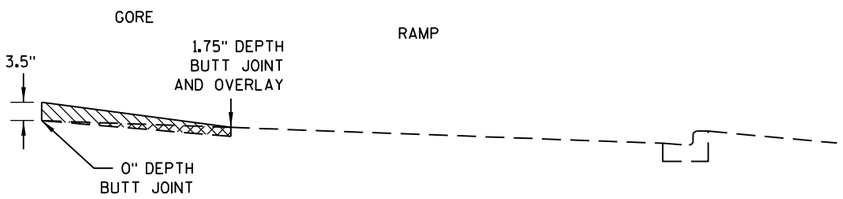

STA. 423+68 EB TO STA. 424+00 EB RT.

SECTION B - B

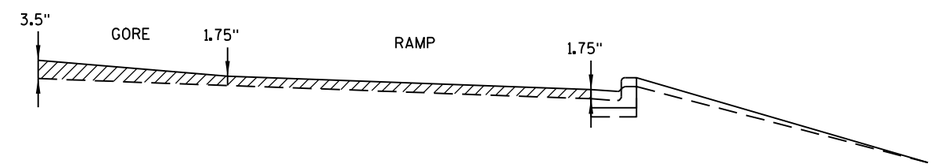

STA. 425+50 EB RT.

ASPHALTIC PAVEMENT

BUTT JOINT AND ASPHALTIC PAVEMENT

SECTION C - C

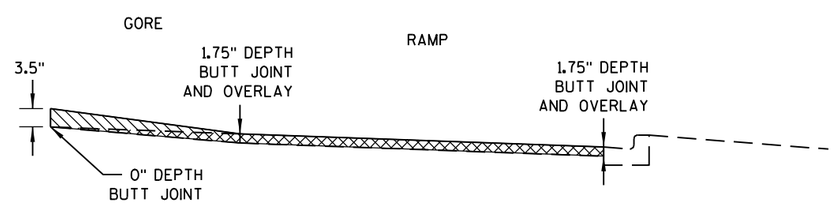

STA. 424+00 EB RT.

SECTION A - A

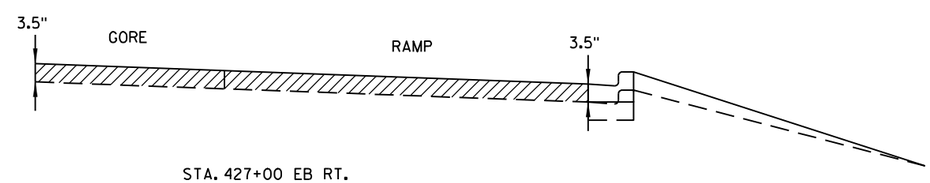

STA. 427+00 EB RT.

BUTT JOINT AND OVERLAY DETAIL

STA. 423+68 EB TO STA. 427+00 EB

PROJECT NO:1010-00-72	HWY:IH 39	COUNTY:DANE	CONSTRUCTION DETAILS	SHEET	E

2

2

BUTT JOINT LOCATION

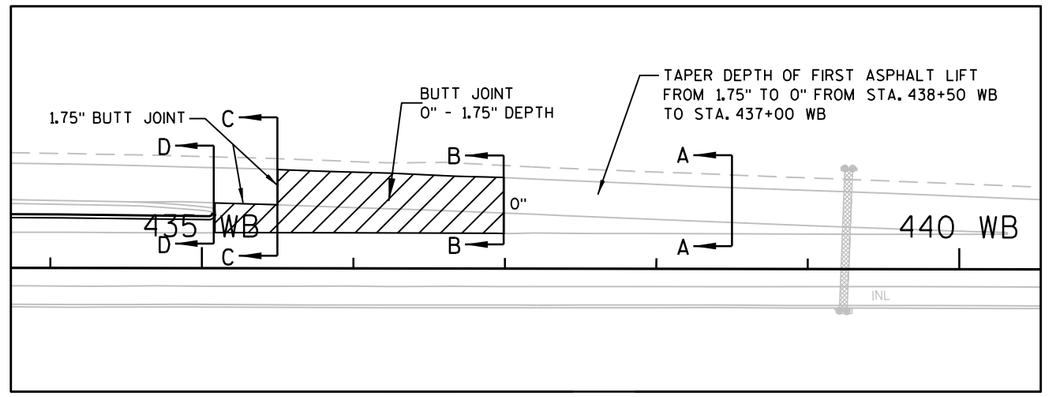

SECTION
A - A

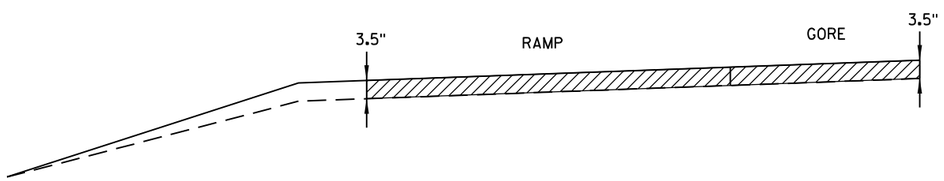

STA. 438+50 WB LT.

SECTION
C - C

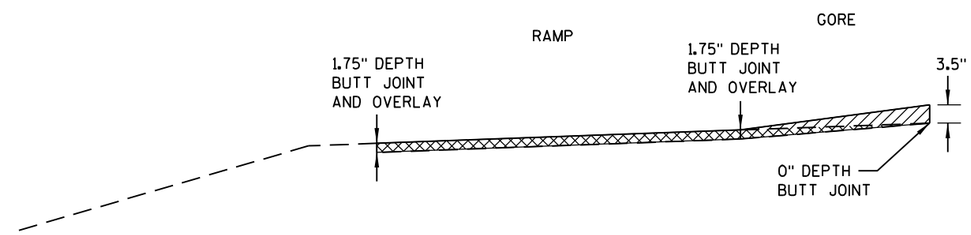

STA. 435+50 WB LT.

ASPHALTIC PAVEMENT

BUTT JOINT AND
ASPHALTIC PAVEMENT

SECTION
B - B

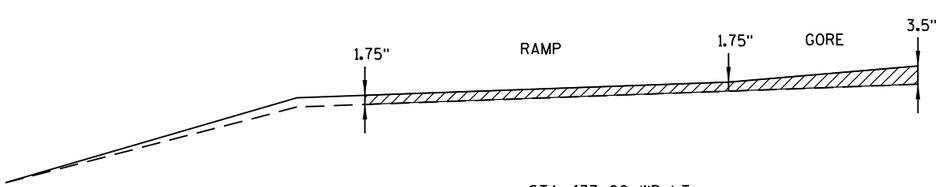

STA. 437+00 WB LT.

SECTION
D - D

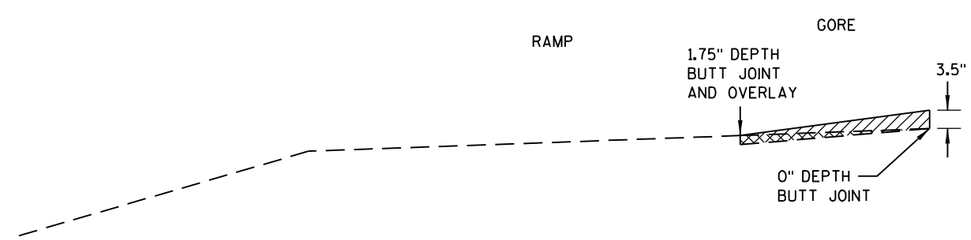

STA. 435+09 WB TO STA. 435+50 WB LT.

BUTT JOINT AND OVERLAY DETAIL

STA. 435+09 WB TO STA. 438+50 WB

PROJECT NO:1010-00-72	HWY:IH 39	COUNTY:DANE	CONSTRUCTION DETAILS	SHEET	E

2

GENERAL NOTES

1. THE LOCATION OF RAMP CLOSURE GATES AND MOUNTING HEIGHT OF GATE ARM PIVOT SHALL BE VERIFIED BY THE ENGINEER.
2. HEIGHT OF GATE ARM GUIDES MAY BE VARIED AS REQUIRED FOR WARNING LIGHT CLEARANCE.
3. FIBERGLASS/ALUMINUM GATE ARM AND SHEAR PIN BASE SHALL BE SUPPLIED BY THE SAME VENDOR.
4. GATE ARM TO BE MOUNTED ON PROPOSED POLE AS INDICATED ON THE PLANS. PROPOSED POLE SHALL BE TYPE 5 POLE.
5. LOCATION OF THE CONCRETE BASE AND LENGTH OF THE GATE ARM WILL BE VERIFIED BY THE ENGINEER TO ENSURE ADEQUATE COVERAGE OF THE TRAVELED LANE.
6. GATE PIVOTS, SUPPORTS AND GUIDES, AND ALL ASSOCIATED HARDWARE SHALL BE GALVANIZED. ALL ROUGH EDGES AND BURRS SHALL BE GROUND SMOOTH PRIOR TO GALVANIZING.
7. ALL EXPOSED BOLT THREADS SHALL BE PAINTED WITH TWO COATS OF ZINC RICH PAINT CONFORMING WITH THE REQUIREMENTS OF ASTM A 780.
8. ANY FIELD DAMAGE TO THE GALVANIZING SHALL BE REPAIRED WITH TWO COATS OF ZINC RICH PAINT CONFORMING WITH THE REQUIREMENTS OF ASTM A 780.
9. A STANDARD LIGHTING LUMINAIRE ARM MAY BE MOUNTED TO THE TYPE 5 POLE IN LIEU OF THE TOP COLLAR.

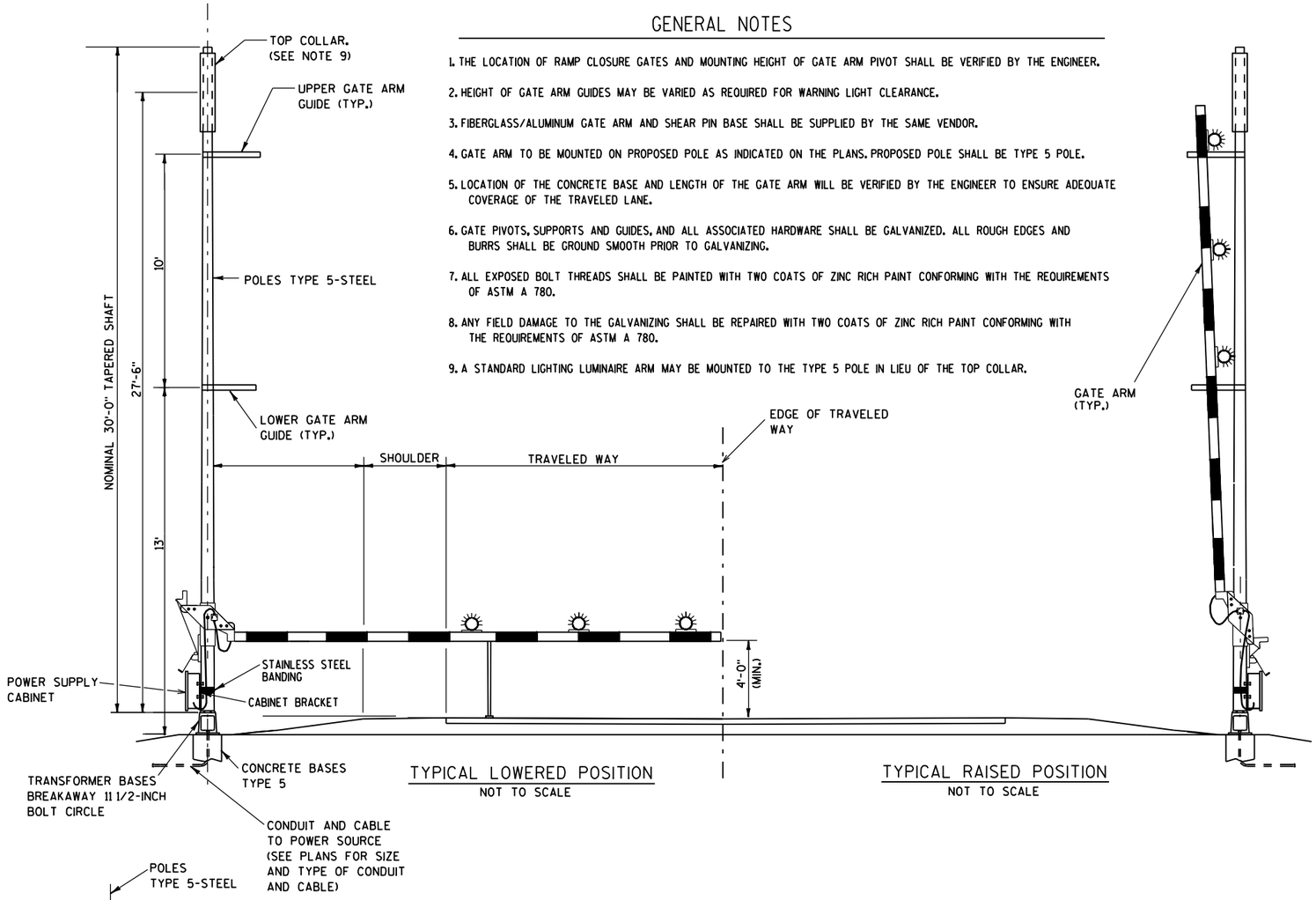

TYPICAL LOWERED POSITION
NOT TO SCALE

TYPICAL RAISED POSITION
NOT TO SCALE

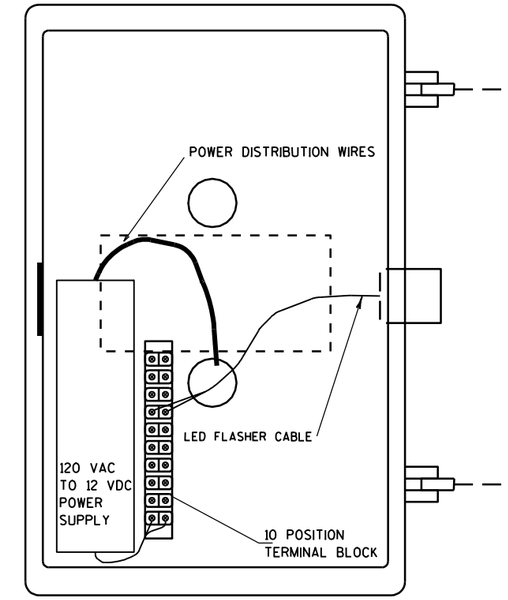

POWER SUPPLY CABINET

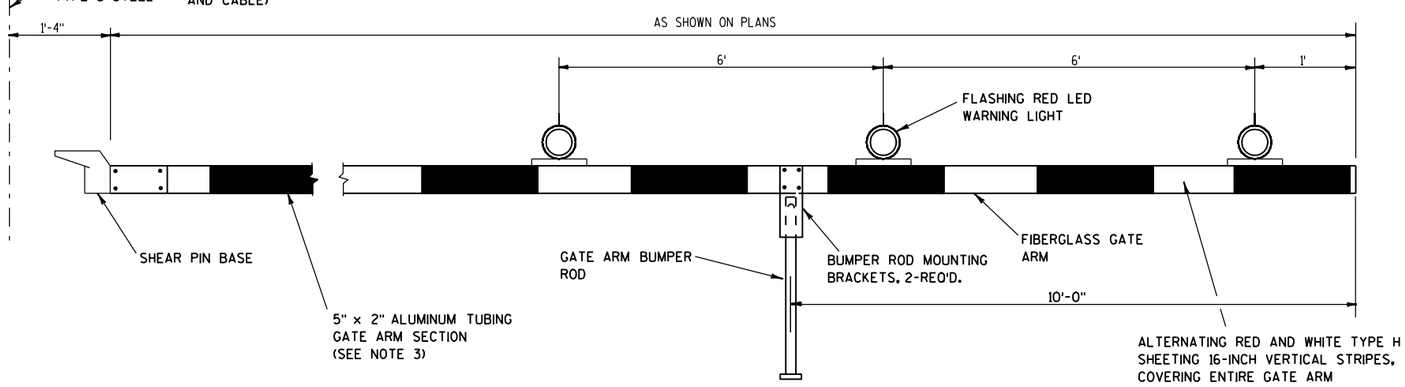

GATE DETAIL
(HARDWIRE POWER OPTION)

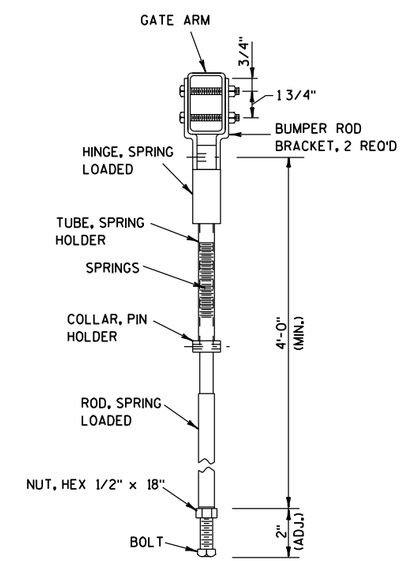

GATE ARM BUMPER ROD DETAIL

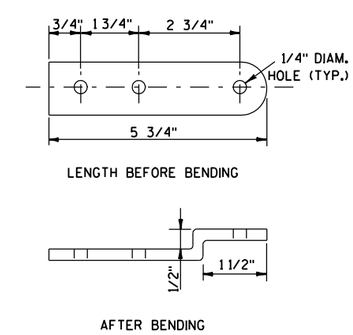

BUMPER ROD MOUNTING BRACKET DETAIL

PROJECT NO:1010-00-72	HWY:IH 39	COUNTY:DANE	RAMP GATE CONSTRUCTION DETAILS	SHEET	E

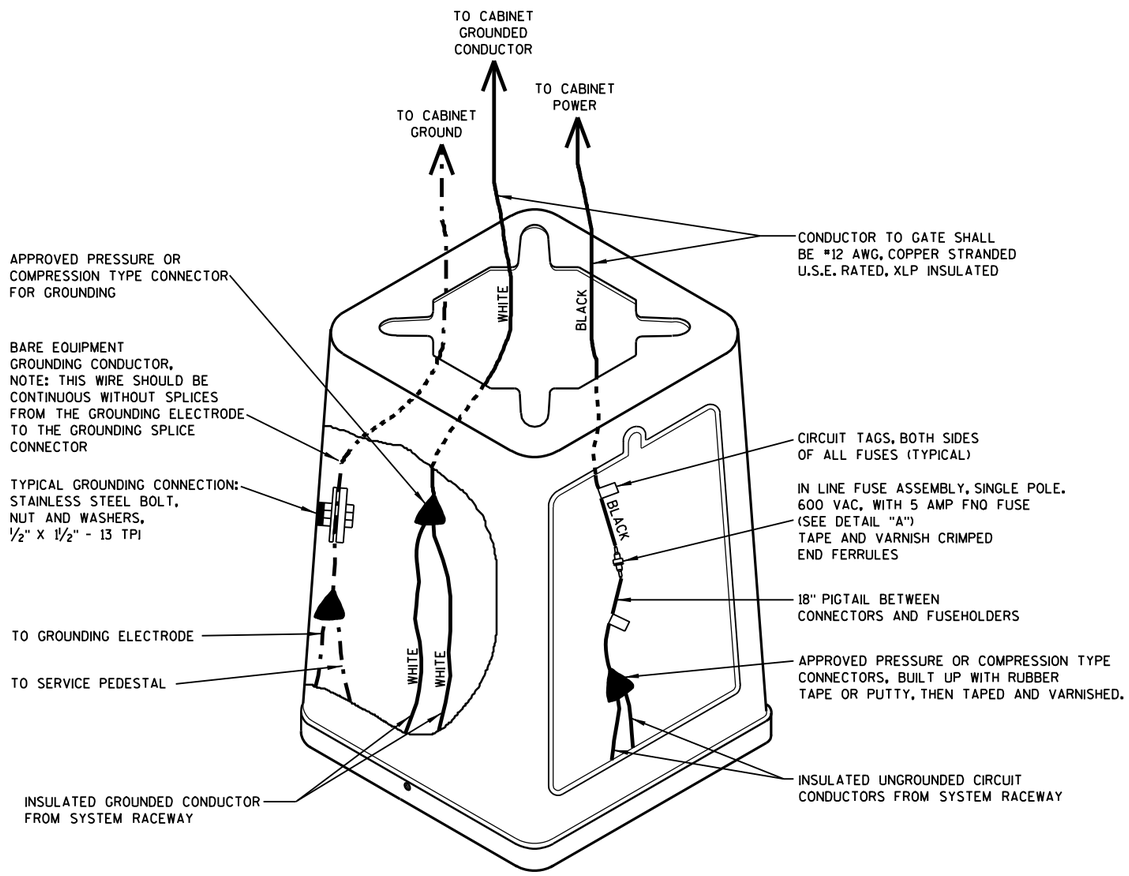

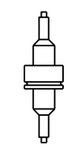

DETAIL "A"
SINGLE POLE

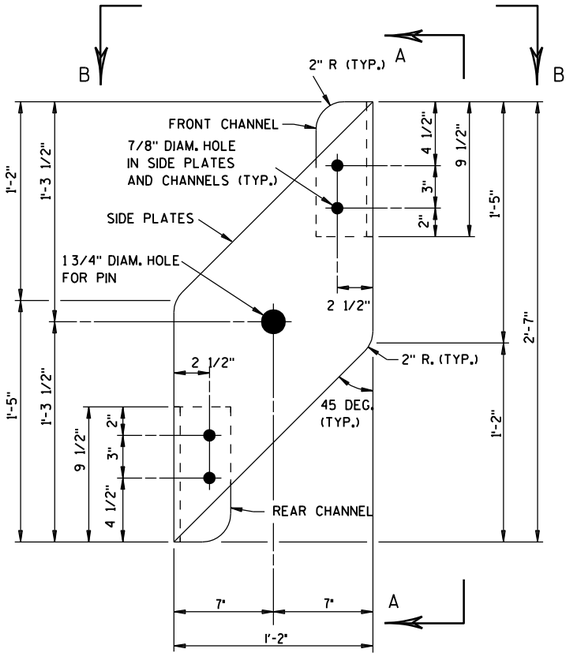

SIDE PLATE DETAIL

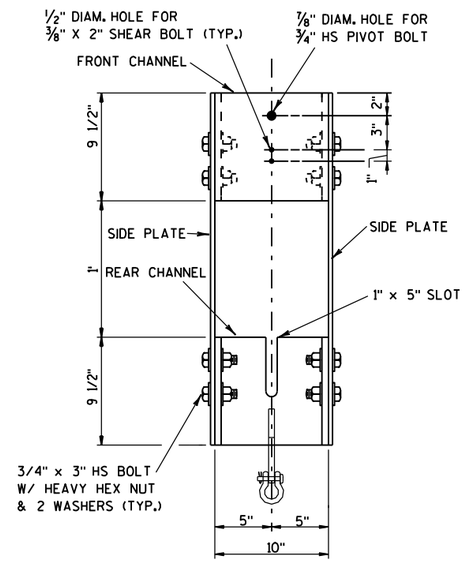

SECTION A-A

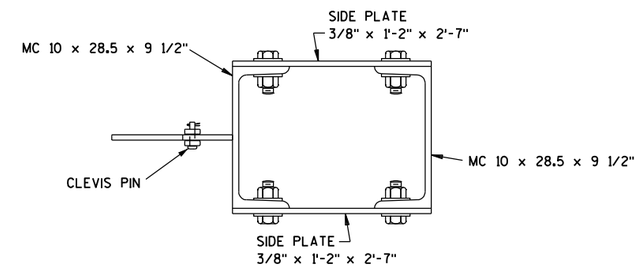

SECTION B-B

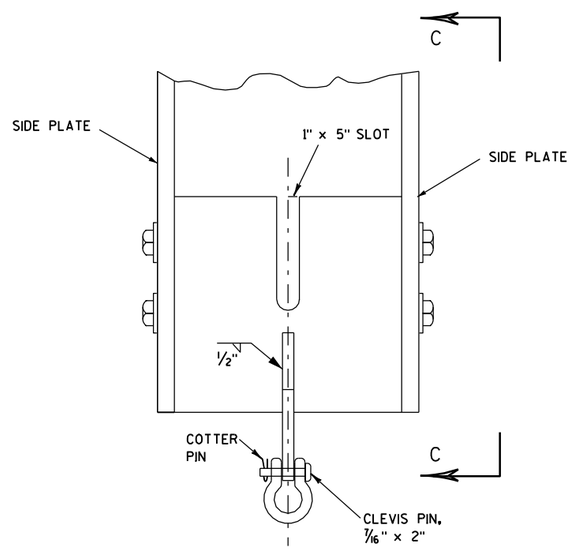

YOKE ASSEMBLY DETAIL

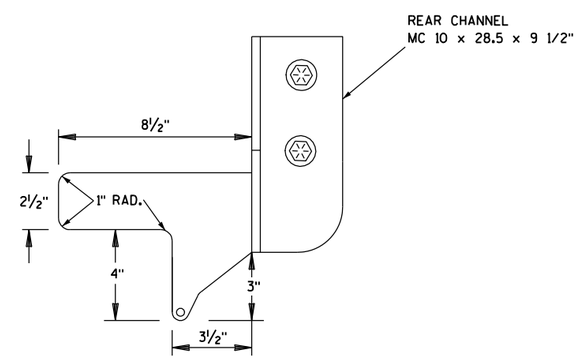

SECTION C-C

PROJECT NO:1010-00-72	HWY:IH 39	COUNTY:DANE	RAMP GATE CONSTRUCTION DETAILS	SHEET	E

GENERAL NOTES

1. WHEN THE GATE IS FULLY RAISED, THE NUT AND WASHER SHALL BE PLACED SNUGLY AGAINST THE OUTSIDE OF THE REAR CHANNEL AND PADLOCKED IN PLACE.
2. WHEN THE GATE IS FULLY LOWERED, THE NUT AND WASHER SHALL BE PLACED SNUGLY AGAINST THE INSIDE OF THE REAR CHANNEL AND PADLOCKED INTO PLACE.
3. ANTI-SEIZE LUBRICATING MATERIAL SHALL BE USED ON ALL BOLT THREADS BEFORE INSTALLATION.
4. ALL BOLTS SHALL BE GALVANIZED AND CONFORM TO ASTM A307, GRADE A, UNLESS DESIGNATED AS HS (HIGH STRENGTH), WHICH SHALL CONFORM TO ASTM A325. BOLTS OF 1/2" NOMINAL DIAMTER OR LESS MAY BE STAINLESS STEEL.

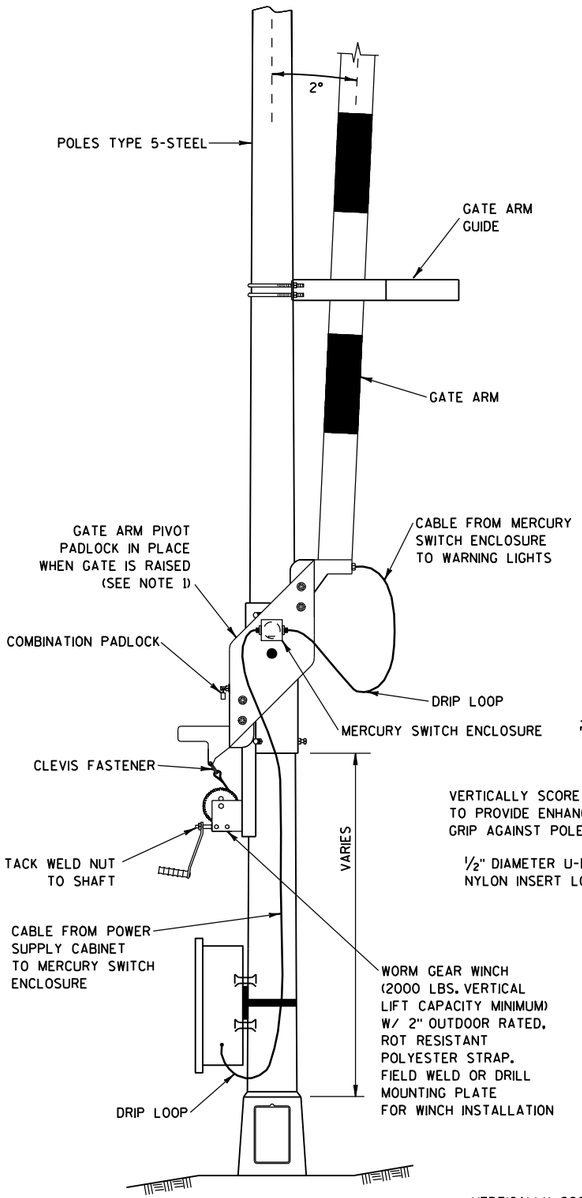

GATE PIVOT ASSEMBLY

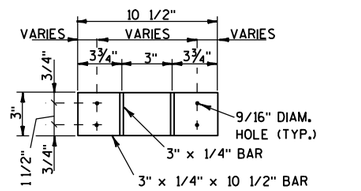

SECTION A-A
U-BOLTS NOT SHOWN

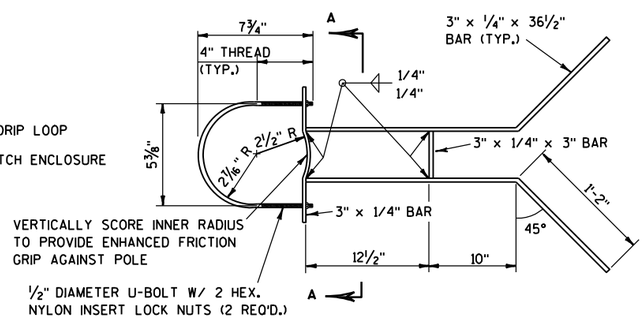

UPPER GATE ARM GUIDE DETAIL

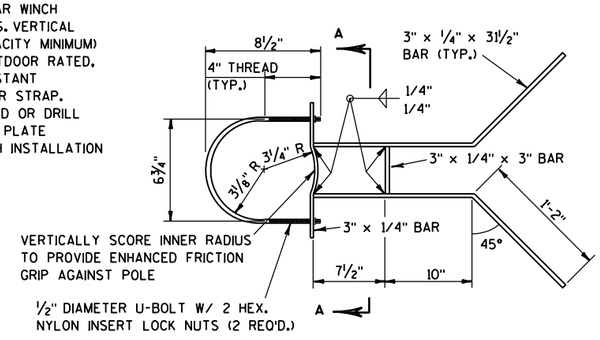

LOWER GATE ARM GUIDE DETAIL

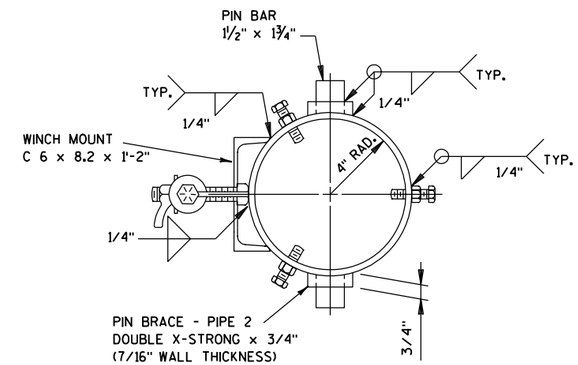

SECTION B-B

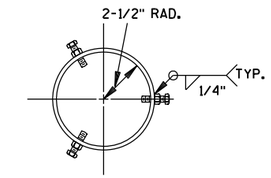

SECTION C-C

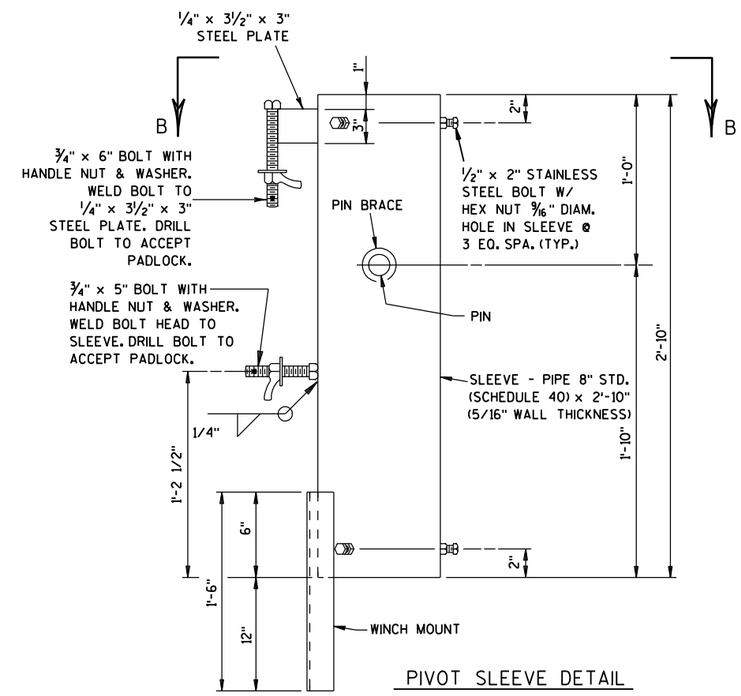

PIVOT SLEEVE DETAIL

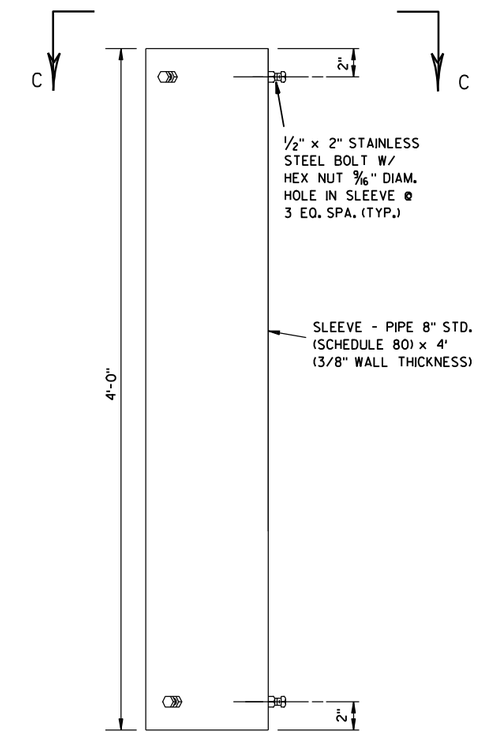

TOP COLLAR

PROJECT NO: 1010-00-72	HWY: IH 39	COUNTY: DANE	RAMP GATE CONSTRUCTION DETAILS	SHEET	E

TABLE OF NOMINAL DIMENSIONS AND WEIGHTS

DIMENSION IN INCHES		CORRUGATED STEEL PIPE								
PIPE DIAMETER (INSIDE)	A	12	12	12	18	18	18	24	24	24
PIPE LENGTH **	B	24	30	36	24	30	36	36	42	48
WALL THICKNESS	C	0.064	0.064	0.064	0.064	0.064	0.064	0.064	0.064	0.064
COVER	D	10 1/4	10 1/4	10 1/4	16 1/4	16 1/4	16 1/4	22 1/4	22 1/4	22 1/4
FRAME	E	14 1/2	14 1/2	14 1/2	20 1/2	20 1/2	20 1/2	26 1/2	26 1/2	26 1/2
FRAME	F	8 1/2	8 1/2	8 1/2	14 1/2	14 1/2	14 1/2	20 1/2	20 1/2	20 1/2
FRAME	G	11 1/2	11 1/2	11 1/2	17 1/2	17 1/2	17 1/2	23 1/2	23 1/2	23 1/2
WEIGHT IN POUNDS *										
FRAME AND COVER		60	60	60	110	110	110	155	155	155

* THE ACTUAL WEIGHT OF THE MANHOLE FRAME AND COVER MAY VARY WITHIN 5 PERCENT PLUS OR MINUS OF THE WEIGHTS SHOWN.

** NORMALLY USED LENGTHS. THE PROJECT ENGINEER SHALL DETERMINE IF PIPE LENGTHS, OTHER THAN THOSE SPECIFIED, SHALL BE USED, TO A MAXIMUM OF 48" (CONTINUOUS LENGTH, NON-SPLICED). THE ADDITIONAL LENGTH SHALL BE INCIDENTAL TO THE PULL BOX BID PRICE.

GENERAL NOTES

DETAILS OF CONSTRUCTION, MATERIALS AND WORKMANSHIP NOT SHOWN ON THIS DRAWING SHALL CONFORM TO THE PERTINENT REQUIREMENTS OF THE CONTRACT.

ALL FRAMES AND COVERS SHALL BE HEAVY DUTY TYPE, SUITABLE FOR VEHICULAR TRAFFIC LOADS.

PULL BOXES LOCATED IN THE ROADWAYS SHALL HAVE LOCKING COVERS.

ENTRANCE HOLES INTO PULL BOXES SHALL BE CUT WITH A CIRCULAR HOLE SAW OR HYDRAULIC CONDUIT PUNCH. HOLE SIZE SHALL BE THE OUTSIDE DIAMETER OF THE CONDUIT THAT IS TO FIT IN THE OPENING PLUS NO MORE THAN 1/4".

THE CONTRACTOR SHALL NOT INSTALL WIRE IN ANY PULL BOX UNTIL ITS INSTALLATION HAS BEEN INSPECTED AND ACCEPTED BY THE ENGINEER.

GROUNDING LUGS (MECHANICAL CONNECTORS) SHALL BE U.L. LISTED AND APPROVED FOR USE WITH COPPER WIRE. THE MECHANICAL CONNECTION (INSIDE AND OUTSIDE) TO THE PULL BOX, SHALL BE TOTALLY AND PERMANENTLY SEALED WITH A SILICONE OR RUBBERIZED CAULKING COMPOUND AS APPROVED BY THE ENGINEER.

GROUNDING LUGS ARE NOT REQUIRED IN PULL BOXES WHEN VOLTAGES OF LESS THAN 50 VOLTS AC ARE THE ONLY VOLTAGES ENCOUNTERED IN THE BOXES.

ALL METALLIC CONDUIT IN WHICH WIRE AND/OR CABLE IS TO BE INSTALLED, SHALL BE BUSHED BEFORE INSTALLATION OF THE WIRE AND/OR CABLE.

S.D.D. 9B2, "CONDUIT", APPLIES TO THIS DRAWING.

WHEN PULL BOXES ARE INSTALLED FOR FUTURE USE, DO NOT INSTALL THE EQUIPMENT GROUNDING LUG. THE EQUIPMENT GROUNDING LUG, THE EQUIPMENT GROUNDING ELECTRODE AND THE EQUIPMENT GROUNDING CONDUCTOR SHALL BE REQUIRED AND INSTALLED UNDER A FUTURE WIRING CONTRACT.

IF PULL BOX EQUIPMENT GROUNDING IS REQUIRED USING AN EQUIPMENT GROUNDING ELECTRODE IN EACH PULL BOX, THE EQUIPMENT GROUNDING ELECTRODE SHALL BE 5/8" X 8'-0", COPPERCLAD AND BE EXOTHERMICALLY WELDED TO A #4 AWG, COPPER, STRANDED WIRE (BARE OR GREEN INSULATED). THE #4 AWG WIRE SHALL BE 4 FEET IN LENGTH, NEATLY COILED, TAPED AND AVAILABLE FOR USE WHEN REQUIRED.

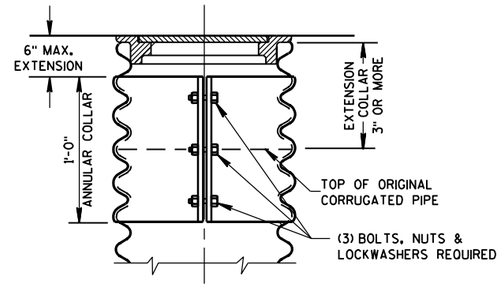

CORRUGATED PIPE EXTENDER

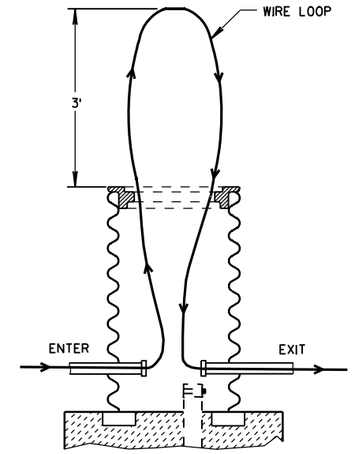

MEASUREMENT DETAIL FOR WIRE/CABLE IN THE PULL BOX

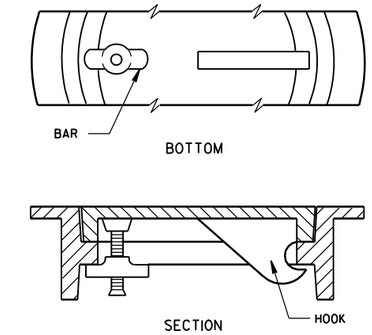

ALTERNATE COVER (LOCKING)

TIGHTENING BAR TYPE

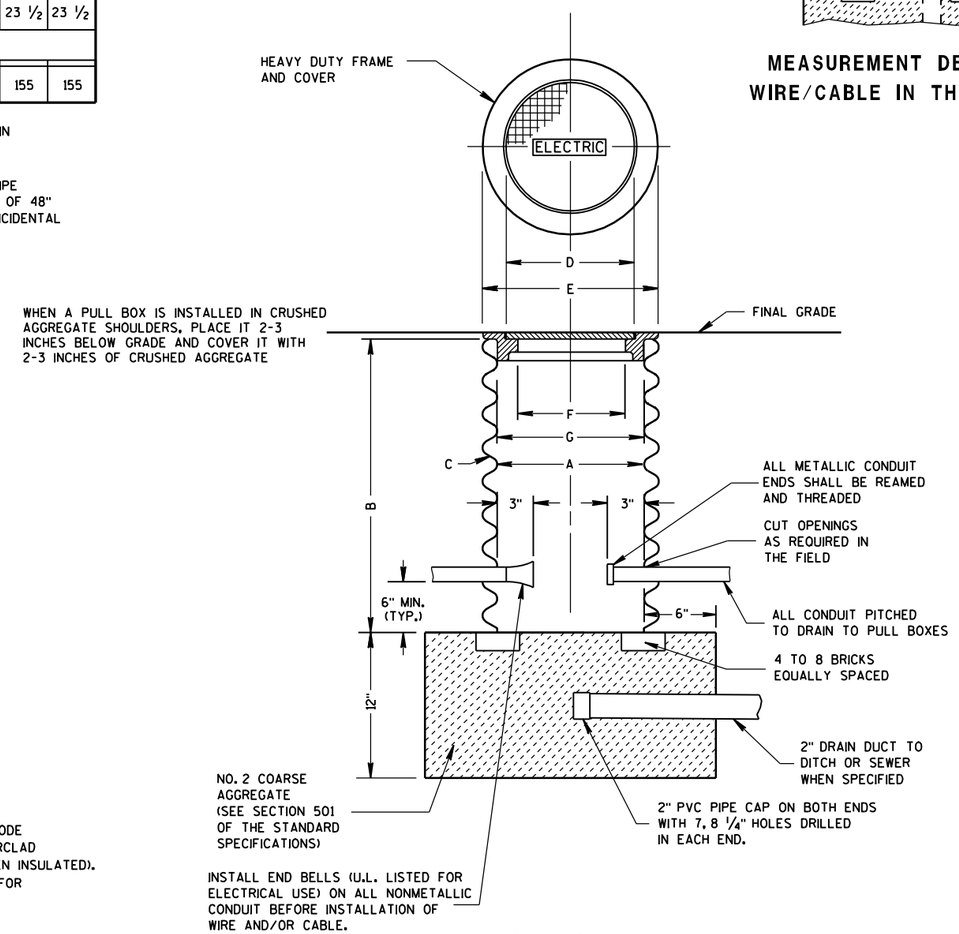

PULL BOX

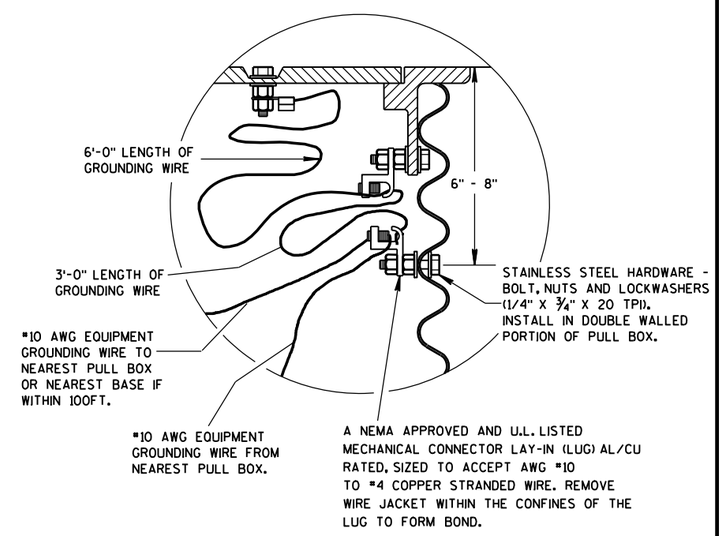

EQUIPMENT GROUNDING LUGS AND LOCATION IN STEEL PULL BOXES

2

LEGEND

- EXISTING ITS CONTROL CABINET
- EXISTING METER PEDESTAL
- PROPOSED NONMETALLIC CONDUIT 2", UNLESS OTHERWISE NOTED
- EXISTING NONMETALLIC CONDUIT
- PROPOSED PULL BOX, 24" X 36"
- PROPOSED PULL BOX, 24" X 42"
- EXISTING PULL BOX
- RAMP CLOSURE GATE

(CONTINUED ON NEXT PAGE)

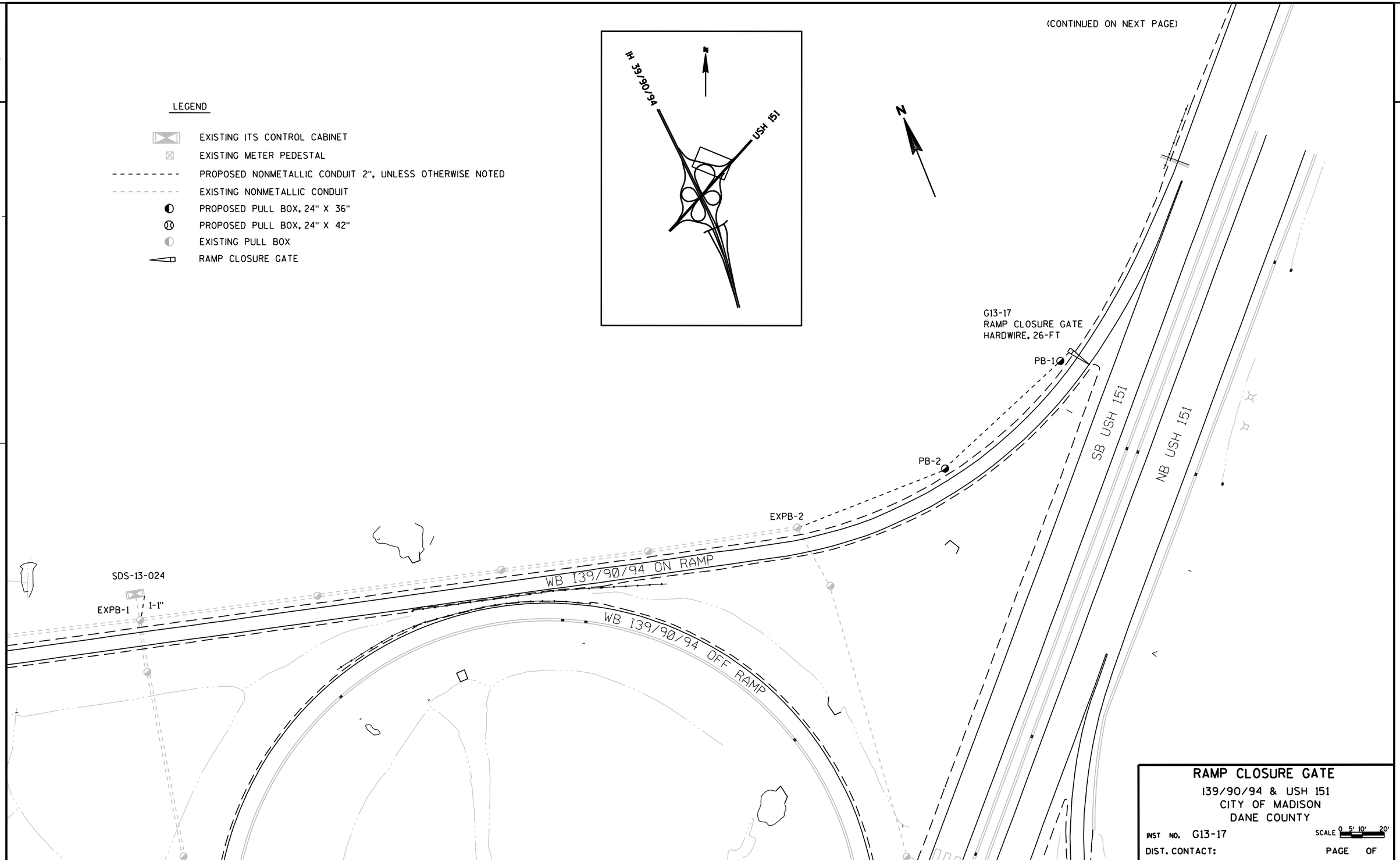

RAMP CLOSURE GATE

139/90/94 & USH 151
CITY OF MADISON
DANE COUNTY

INST NO. G13-17
SCALE 0 5' 10' 20'
DIST. CONTACT:
PAGE OF

PROJECT NO:1010-00-72	HWY:IH39	COUNTY:DANE	RAMP CLOSURE GATE DETAIL	SHEET	E

FILE NAME : r:\Support\CADDS\Projects\d1_10100072\021001_cd.dgn PLOT DATE : 25-APR-2012 09:49 PLOT BY : DOTJ3J PLOT NAME : PLOT SCALE : 200.000000:1.000000

WISDOT/CADDS SHEET 42

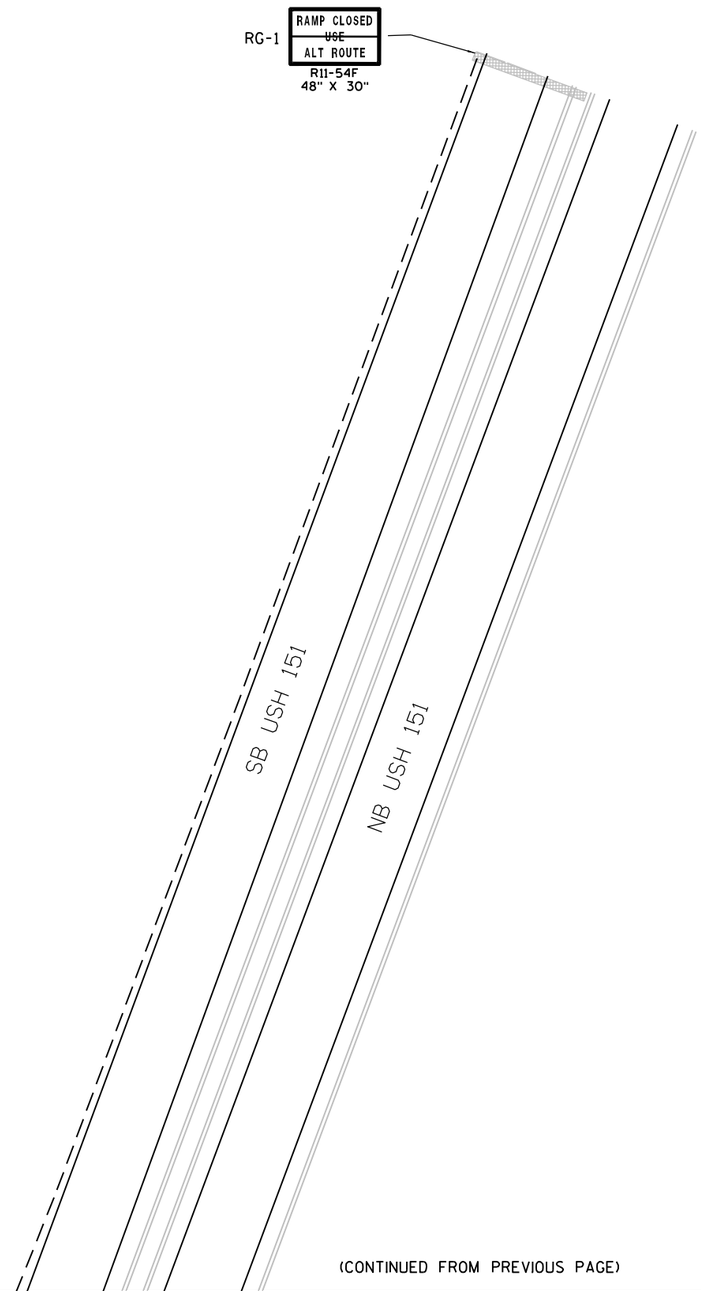

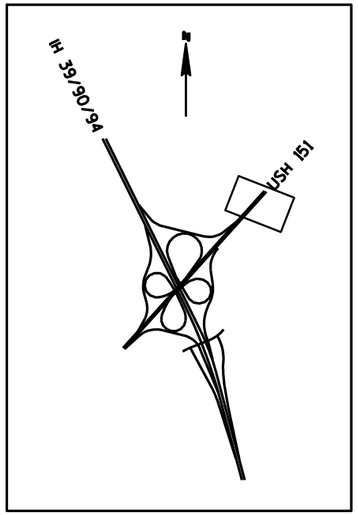

(CONTINUED FROM PREVIOUS PAGE)

RAMP CLOSURE GATE

I39/90/94 & USH 151
CITY OF MADISON
DANE COUNTY

INST NO. G13-17 SCALE 0 5' 10' 20'

DIST. CONTACT: PAGE OF

PROJECT NO:1010-00-72	HWY:IH39	COUNTY:DANE	RAMP CLOSURE GATE DETAIL	SHEET	E

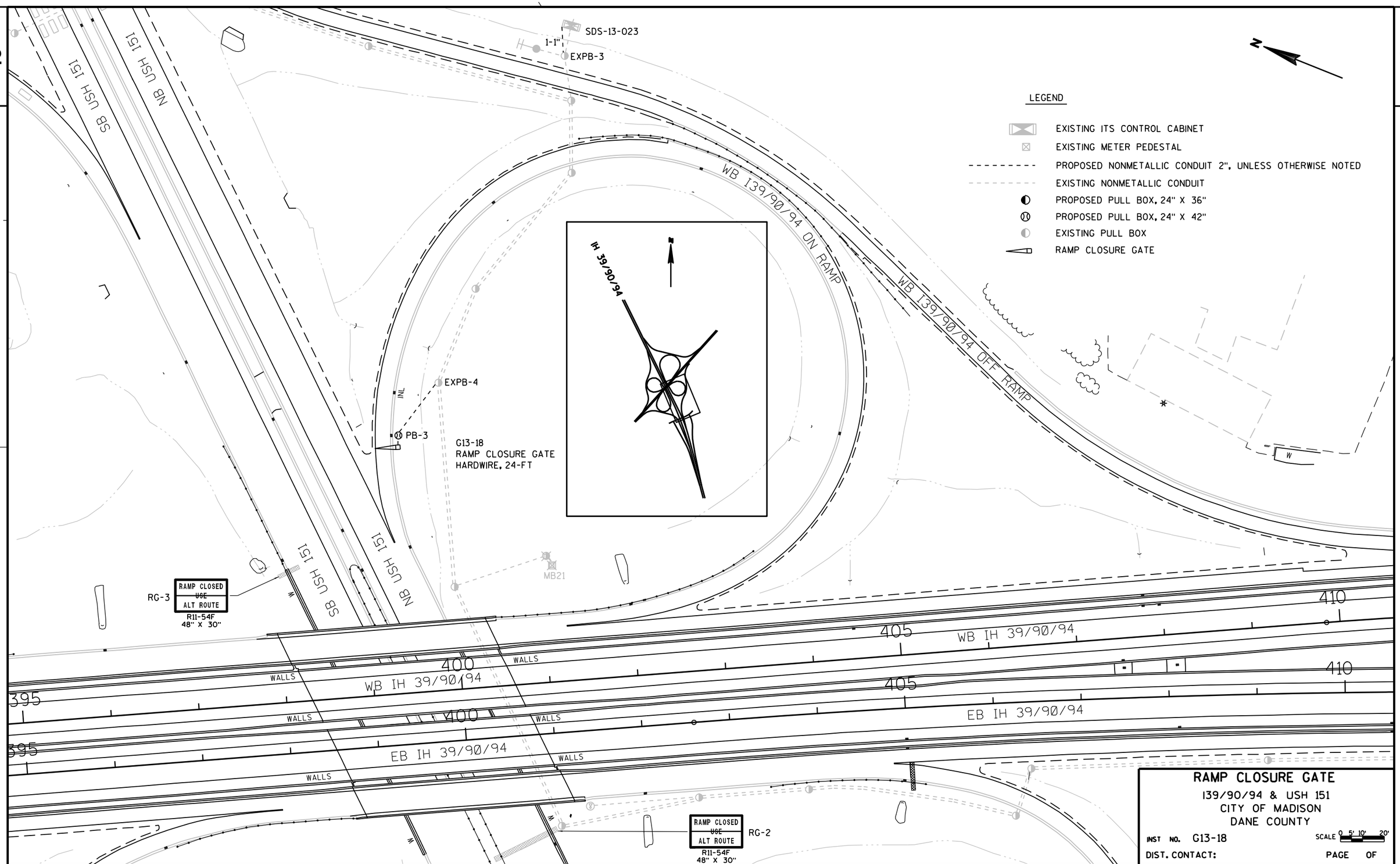

PROJECT NO:1010-00-72	HWY:IH39	COUNTY:DANE	RAMP CLOSURE GATE DETAIL	SHEET	E

FILE NAME : r:\Support\CADDS\Projects\d1_10100072\021001_cd.dgn PLOT DATE : 25-APR-2012 09:49 PLOT BY : DOTJ3J PLOT NAME : PLOT SCALE : 200.000000:1.000000 WISDOT/CADDS SHEET 42

2

RG-3
RAMP CLOSED
~~USE~~
ALT ROUTE
R11-54F
48" X 30"

MB21

WALLS

400

WB IH 39/90/94

395

390

EB IH 39/90/94

RG-2
RAMP CLOSED
~~USE~~
ALT ROUTE
R11-54F
48" X 30"

MB 23

N

IH 39/90/94

USH 151

G13-19
RAMP CLOSURE GATE
HARDWIRE, 24-FT

PB-4

PB-5

PB-6

EXPB-6

EXPB-5

1-1"

SDS-13-025

MB22

EB 139/90/94 OFF RAMP

EB 139/90/94 ON RAMP

SB USH 151

NB USH 151

LEGEND

- EXISTING ITS CONTROL CABINET
- EXISTING METER PEDESTAL
- PROPOSED NONMETALLIC CONDUIT 2", UNLESS OTHERWISE NOTED
- EXISTING NONMETALLIC CONDUIT
- PROPOSED PULL BOX, 24" X 36"
- PROPOSED PULL BOX, 24" X 42"
- EXISTING PULL BOX
- RAMP CLOSURE GATE

RAMP CLOSURE GATE
139/90/94 & USH 151
CITY OF MADISON
DANE COUNTY

INST NO. G13-19
SCALE 0 5' 10' 20'
DIST. CONTACT:
PAGE OF

PROJECT NO:1010-00-72	HWY:IH39	COUNTY:DANE	RAMP CLOSURE GATE DETAIL	SHEET	E

2

EXPB-6

EXPB-5

MB22

1-1"

SDS-13-025

EXPB-7

PB-9

EB I39/90/94 ON RAMP

PB-8

PB-7

G13-20
RAMP CLOSURE GATE
HARDWIRE, 26-FT

NB USH 151

SB USH 151

RAMP CLOSED
USE
ALT ROUTE
R11-54F
48" X 30"

RG-4

N

IH 39/90/94

USH 151

N

LEGEND

- EXISTING ITS CONTROL CABINET
- EXISTING METER PEDESTAL
- PROPOSED NONMETALLIC CONDUIT 2", UNLESS OTHERWISE NOTED
- EXISTING NONMETALLIC CONDUIT
- PROPOSED PULL BOX, 24" X 36"
- PROPOSED PULL BOX, 24" X 42"
- EXISTING PULL BOX
- RAMP CLOSURE GATE

RAMP CLOSURE GATE

139/90/94 & USH 151
CITY OF MADISON
DANE COUNTY

INST NO. G13-20 SCALE 0 5' 10' 20'

DIST. CONTACT: PAGE OF

PROJECT NO:1010-00-72	HWY:IH39	COUNTY:DANE	RAMP CLOSURE GATE DETAIL	SHEET	E

FILE NAME : r:\Support\CADDS\Projects\d1_10100072\021001_cd.dgn PLOT DATE : 25-APR-2012 09:49 PLOT BY : DOTJ3J PLOT NAME : PLOT SCALE : 200.000000:1.000000 WISDOT/CADDS

2

2

HIGH CROSSING BLVD

WB IH 39/90/94

EB IH 39/90/94

WALLS

410

415

420

PC 409+84.65

PT 418+97.05

EB I39/90/94 ON RAMP

EXPB-8

PB-10

1-1"

SDS-13-022

G13-21
RAMP CLOSURE GATE
HARDWIRE, 32-FT

EAST
SOUTH
90
39
94

RAMP CLOSED
USE
ALT ROUTE

R11-54F
48" X 30"

RG-5

RG-6

MB20

LEGEND

- EXISTING ITS CONTROL CABINET
- EXISTING METER PEDESTAL
- PROPOSED NONMETALLIC CONDUIT 2", UNLESS OTHERWISE NOTED
- EXISTING NONMETALLIC CONDUIT
- PROPOSED PULL BOX, 24" X 36"
- PROPOSED PULL BOX, 24" X 42"
- EXISTING PULL BOX
- RAMP CLOSURE GATE

RAMP CLOSURE GATE

I39/90/94 & HIGH CROSSING BLVD
CITY OF MADISON
DANE COUNTY

INST NO. G13-21

SCALE 0 5' 10' 20'

DIST. CONTACT:

PAGE OF

PROJECT NO:1010-00-72	HWY:IH39	COUNTY:DANE	RAMP CLOSURE GATE DETAIL	SHEET	E

FILE NAME : r:\Support\CADDS\Projects\d1_10100072\021001_cd.dgn PLOT DATE : 25-APR-2012 09:50 PLOT BY : DOTJ3J PLOT NAME : PLOT SCALE : 200.000000:1.000000 WISDOT/CADDS SHEET 42

2

STA. 195+01 WB
EXISTING 18" X 76' LINED CP
TO REMAIN

STA. 203+09 WB
EXISTING 18" X 81' LINED CP
TO REMAIN

STA. 210+08 WB
EXISTING 24" X 94' LINED CP
TO REMAIN

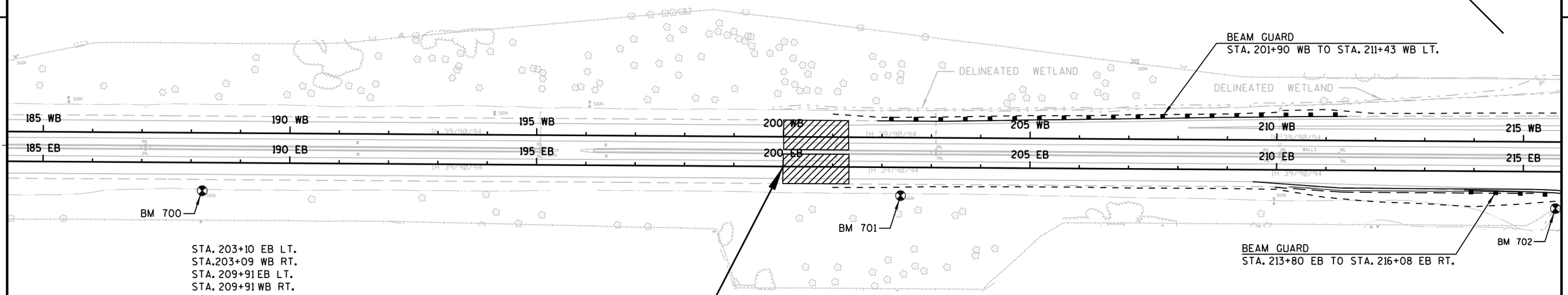

STA. 203+10 EB LT.
STA.203+09 WB RT.
STA. 209+91 EB LT.
STA. 209+91 WB RT.
STA. 210+06 EB LT.
STA. 210+06 WB RT.
STA. 211+26 WB RT.
STA. 211+27 EB LT.
INLET COVERS TO BE ADJUSTED

BEGIN PROJECT
STA. 200+00 E.B.

BUTT JOINT

BENCH MARKS

NO.	STATION	DESCRIPTION	OFFSET	ELEV.
700	188+23 EB	PAINT ON BOLT BLUE HOSPITAL SIGN	56' RT.	881.65
701	202+38 EB	PAINT ON BOLT BLUE GAS/LODGING SIGN	57' RT.	873.10
702	215+66 EB	CHISLED SQUARE ON BOX CULVERT	74' RT.	860.77
703	239+63 EB	PAINT ON TOP OF CMCP	87' RT.	879.42

STA. 216+49 EB
EXISTING TRIPLE BOX
B-13-95 TO REMAIN

STA. 230+87 EB
EXISTING 18" X 102' CPRC
TO REMAIN

STA. 236+20 WB TO STA. 238+50 WB LT.
EXISTING BEAM GUARD TO BE ADJUSTED

STA. 239+65 EB
EXISTING 18" X 125' LINED CP
TO REMAIN

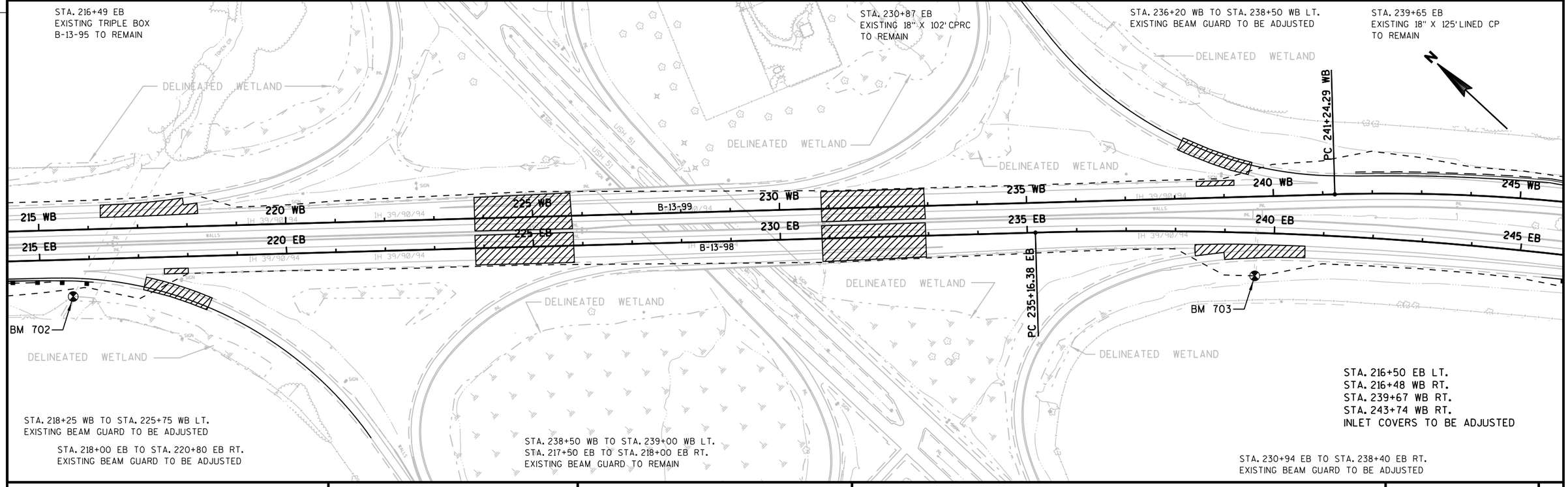

STA. 218+25 WB TO STA. 225+75 WB LT.
EXISTING BEAM GUARD TO BE ADJUSTED

STA. 218+00 EB TO STA. 220+80 EB RT.
EXISTING BEAM GUARD TO BE ADJUSTED

STA. 238+50 WB TO STA. 239+00 WB LT.
STA. 217+50 EB TO STA. 218+00 EB RT.
EXISTING BEAM GUARD TO REMAIN

STA. 216+50 EB LT.
STA. 216+48 WB RT.
STA. 239+67 WB RT.
STA. 243+74 WB RT.
INLET COVERS TO BE ADJUSTED

STA. 230+94 EB TO STA. 238+40 EB RT.
EXISTING BEAM GUARD TO BE ADJUSTED

PROJECT NO: 1010-00-72	HWY: IH 39	COUNTY: DANE	PLAN DETAILS	SHEET	E

2

STA. 247+64 EB
EXISTING 18" X 98' CP
TO REMAIN

STA. 250+05 EB - STA. 250+85 EB LT.
EXISTING 18" X 80' LINED CPRC
TO REMAIN

STA. 255+04 EB
EXISTING 18" X 83' LINED CP
TO REMAIN

STA. 271+15 WB
EXISTING 18" X 72' CPRC
TO REMAIN

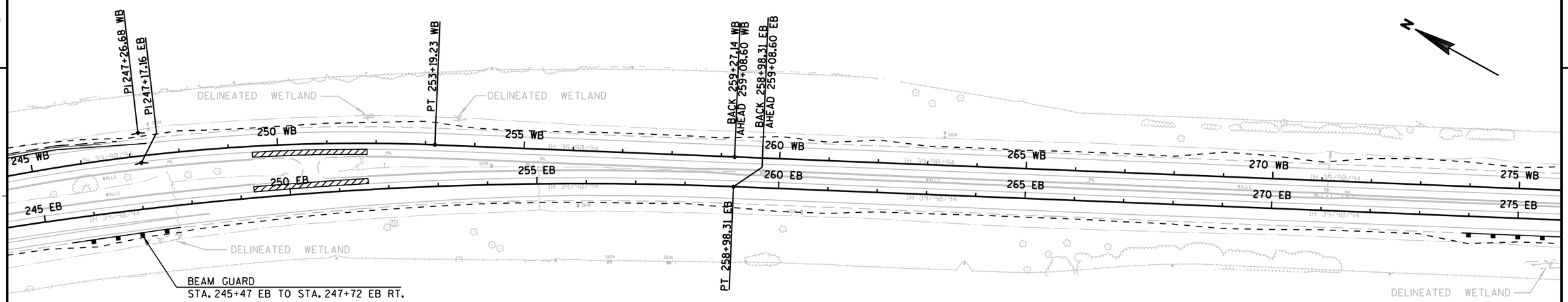

STA. 249+27 EB - STA. 251+59 EB LT.
EXISTING BEAM GUARD TO REMAIN

STA.247+70 WB RT.
STA. 252+17 WB RT.
STA. 255+30 WB RT.
STA. 266+26 WB RT.
STA. 271+10 WB RT.
INLET COVERS TO BE ADJUSTED

BUTT JOINT

BENCH MARKS

NO.	STATION	DESCRIPTION	OFFSET	ELEV.
706	276+10 EB	PAINT ON TOP OF CMCP	50' RT.	892.93
707	289+56 EB	PAINT ON TOP OF CMCP	52' RT.	886.32
13100	290+95 WB	DISK NE CORNER OF BRIDGE	73' LT.	907.34

STA. 276+09 EB
EXISTING 18" X 76' LINED CP
TO REMAIN

STA. 284+03 WB
EXISTING 18" X 74' CPRC
TO REMAIN

STA. 292+03 WB
EXISTING 18" X 70' CPRC
TO REMAIN

STA. 300+04 WB
EXISTING 18" X 71' LINED CP
TO REMAIN

STA. 291+43 WB - STA. 293+50 WB LT.
EXISTING BEAM GUARD TO BE REMOVED

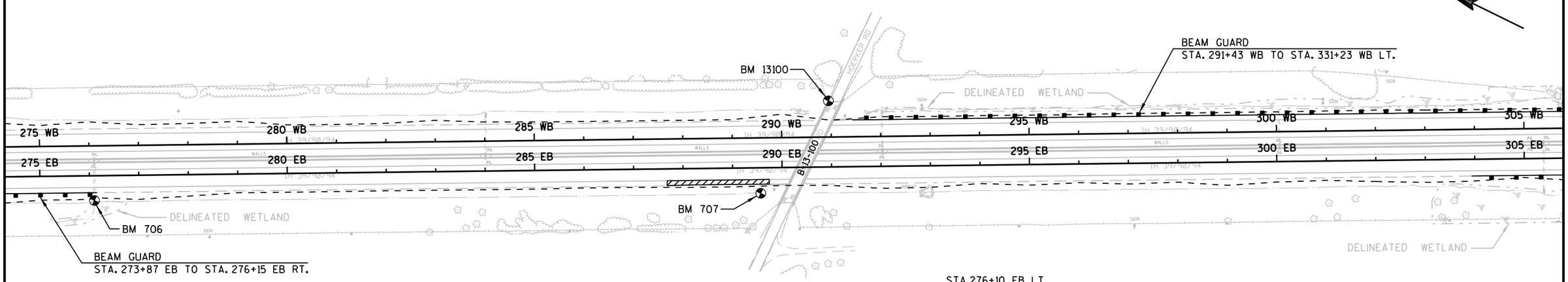

STA.276+10 EB LT.
STA. 276+10 WB RT.
STA. 284+01 EB LT.
STA. 284+01 WB RT.
STA. 292+04 EB LT.
STA. 292+04 WB RT.
STA. 300+07 EB LT.
STA. 300+07 WB RT.
INLET COVERS TO BE ADJUSTED

STA. 287+65 EB - STA. 289+74 EB LT.
EXISTING BEAM GUARD TO REMAIN

PROJECT NO: 1010-00-72	HWY: IH 39	COUNTY: DANE	PLAN DETAILS	SHEET	E

2

STA. 305+40 EB
EXISTING 18" X 74' CPRC
TO REMAIN

STA. 309+49 EB
EXISTING 18" X 76' CPRC
TO REMAIN

STA. 316+58 WB
EXISTING 48" X 92' LINED CP
TO REMAIN

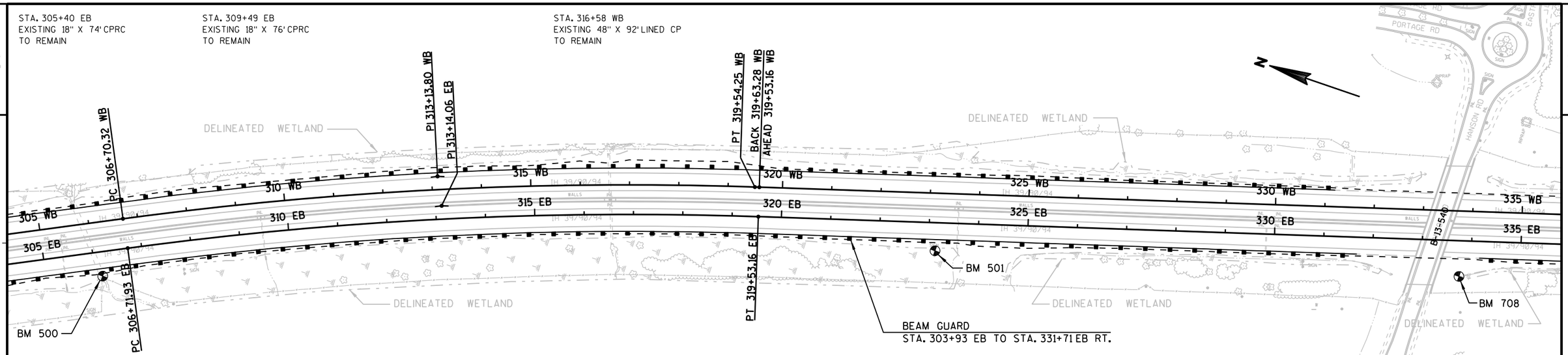

BUTT JOINT

STA. 305+25 EB LT.
STA. 305+25 WB RT.
STA. 305+40 EB LT.
STA. 305+40 WB RT.
STA. 329+84 EB LT.
STA. 329+84 WB RT.
STA. 329+99 EB LT.
STA. 329+99 WB RT.
INLET COVERS TO BE ADJUSTED

STA. 306+00 EB
EXISTING STRUCTURAL PLATE PIPE ARCH
C-13-2015 TO REMAIN

STA. 316+53 EB
EXISTING 48" X 89' LINED CP
TO REMAIN

BENCH MARKS

NO.	STATION	DESCRIPTION	OFFSET	ELEV.
500	306+14 EB	PAINT ON END BOLT OF CMCP	49' RT.	873.25
501	323+13 EB	PAINT ON BOLT OF FOOD EXIT SIGN	57' RT.	872.10
708	333+76 EB	PAINT ON TOP OF RCCP	72' RT.	878.58
709	342+49 EB	PAINT ON BOLT OF GAS EXIT SIGN	57' RT.	880.67

STA. 323+58 EB
EXISTING 18" X 83' LINED CP
TO REMAIN

STA. 329+83 EB
EXISTING 18" X 75' LINED CP
TO REMAIN

STA. 336+13 EB
EXISTING 18" X 71' LINED CP
TO REMAIN

STA. 345+07 EB
EXISTING SINGLE BOX
C-13-42 TO REMAIN

STA. 353+04 WB
EXISTING 18" X 79' LINED CP
TO REMAIN

STA. 362+08 WB
EXISTING 18" X 78' LINED CP
TO REMAIN

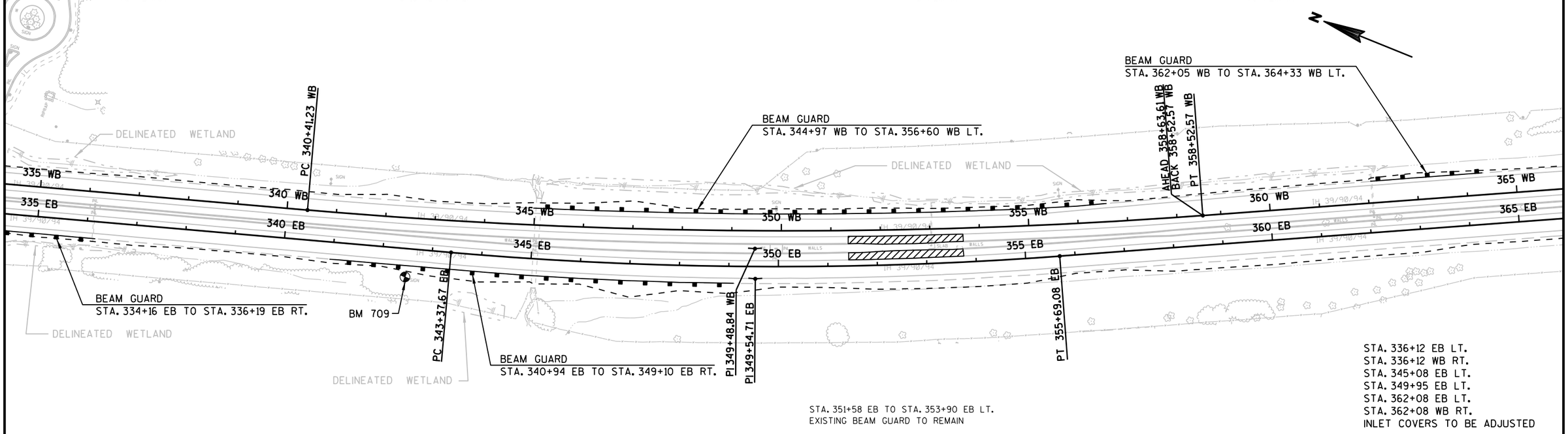

STA. 351+58 EB TO STA. 353+90 EB LT.
EXISTING BEAM GUARD TO REMAIN

STA. 336+12 EB LT.
STA. 336+12 WB RT.
STA. 345+08 EB LT.
STA. 349+95 EB LT.
STA. 362+08 EB LT.
STA. 362+08 WB RT.
INLET COVERS TO BE ADJUSTED

PROJECT NO: 1010-00-72	HWY: IH 39	COUNTY: DANE	PLAN DETAILS	SHEET	E

2

STA. 371+58 EB LT.
STA. 371+58 WB RT.
STA. 378+61 WB LT.
STA. 378+84 WB LT.
STA. 379+06 EB LT.
STA. 379+06 WB RT.
STA. 379+07 WB LT.
STA. 381+28 EB RT.
STA. 381+55 EB RT.
STA. 381+79 EB RT.
INLET COVERS TO BE ADJUSTED

STA.371+57 WB
EXISTING 18" X 85' LINED CP
TO REMAIN

STA.372+78 EB
EXISTING 96" X 238' LINED CP
TO REMAIN

STA.379+06 WB
EXISTING 18" X 113' LINED CP
TO REMAIN

STA.387+64 WB
EXISTING 18" X 131' LINED CP
TO REMAIN

STA.391+85 EB
EXISTING 42" X 340' LINED CP
TO REMAIN

BEAM GUARD
STA. 371+50 WB TO STA. 372+00 WB LT.

CONCRETE CURB & GUTTER
STA. 378+50 WB TO STA. 391+98 WB LT.
SAW CUT REQ'D.

3" ASPHALTIC SURFACE
SAFETY ISLANDS

DELINEATED WETLAND

365 WB 370 WB 375 WB 380 WB 385 WB 390 WB 395 WB

365 EB 370 EB 375 EB 380 EB 385 EB 390 EB 395 EB

BM 711 BM 712 BM 713

STA. 382+00 WB LT.
STA. 384+98 EB RT.
STA. 385+00 WB LT.
STA. 387+65 EB LT.
STA. 385+65 WB RT.
STA. 387+66 WB LT.
STA. 387+99 EB RT.
STA. 390+00 WB LT.
STA. 391+00 EB RT.
STA. 393+00 WB LT.
STA. 393+98 EB RT.
INLET COVERS TO BE ADJUSTED

BEAM GUARD
STA. 369+02 EB TO STA. 375+05 EB RT.

CONCRETE CURB & GUTTER
STA. 381+15 EB TO STA. 385+00 EB RT.
SAW CUT REQ'D.

3" ASPHALTIC SURFACE
SAFETY ISLANDS

BUTT JOINT

STA. 372+00 WB TO STA. 375+00 WB LT.
EXISTING BEAM GUARD TO BE ADJUSTED

STA. 375+00 WB TO STA. 375+50 WB LT.
EXISTING BEAM GUARD TO REMAIN

STA. 385+10 EB RT.
EXISTING CRASH CUSHION
TO REMAIN

STA. 378+50 WB TO STA. 391+98 WB. LT.
STA. 381+15 EB TO STA. 385+00 EB RT.
EXISTING CURB & GUTTER TO BE REMOVED

BENCH MARKS

NO.	STATION	DESCRIPTION	OFFSET	ELEV.
711	369+22 EB	PAINT ON BOLT OF MADISON SIGN	58' RT.	908.52
712	379+66 EB	CHISLED SQUARE ON RCCP	83' RT.	919.39
713	393+98 EB	CHISLED SQUARE ON RCCP	93' RT.	938.69

STA. 398+55 EB
EXISTING 42" X 340' LINED CP
TO REMAIN

STA. 404+48 WB LT.
STA. 405+00 EB RT.
STA. 407+50 WB RT.
STA. 407+79 WB LT.
STA. 407+96 WB LT.
STA. 408+10 EB RT.
STA. 410+53 EB RT.
STA. 412+80 WB LT.
STA. 412+93 WB RT.
INLET COVERS TO BE ADJUSTED

STA. 408+11 EB
EXISTING 18" X 120' LINED CP
TO REMAIN

STA. 412+88 EB TO STA. 416+07 EB RT.
STA. 415+00 WB TO STA. 424+76 WB LT.
STA. 417+00 EB TO STA. 423+68 EB RT.
EXISTING CURB & GUTTER TO BE REMOVED

STA. 415+00 EB
EXISTING 18" X 131' LINED CP
TO REMAIN

CONCRETE CURB & GUTTER
STA. 415+00 WB TO STA. 424+76 WB LT.
SAW CUT REQ'D.

3" ASPHALTIC SURFACE
SAFETY ISLANDS

PC 409+84.65 WB
PI 414+42.34
PI 414+20.03 EB
PT 418+97.05 WB
PC 402+53.36 EB
BACK PT 425+73.11 EB
AHEAD 425+80.00 EB

BM 13451
BM 13103
BM 13102
BM 13452
BM 13453

B-13-451
B-13-103
B-13-102
B-13-452
B-13-453

DELINEATED WETLAND

395 WB 400 WB 405 WB 410 WB 415 WB 420 WB 425 WB

395 EB 400 EB 405 EB 410 EB 415 EB 420 EB 425 EB

3" ASPHALTIC SURFACE
SAFETY ISLANDS

STA. 414+41 EB TO STA. 416+73 EB LT.
EXISTING BEAM GUARD TO REMAIN

CONCRETE CURB & GUTTER
STA. 417+00 EB TO STA. 423+68 EB RT.

STA. 413+53 EB LT.
STA. 415+76 EB RT.
STA. 415+95 EB RT.
STA. 418+87 EB RT.
STA. 419+07 EB RT.
STA. 421+57 EB RT.
STA. 421+87 WB LT.
STA. 423+07 WB RT.
STA. 423+08 EB RT.
STA. 423+27 EB RT.
STA. 423+57 EB RT.
STA. 424+56 WB LT.
INLET COVERS TO BE ADJUSTED

CONCRETE CURB & GUTTER
STA. 412+88 EB TO STA. 416+07 EB RT.
SAW CUT REQ'D.

STA. 414+85 WB LT.
EXISTING CRASH CUSHION
TO REMAIN

STA. 423+00 WB
EXISTING 18" X 130' LINED CP
TO REMAIN

BENCH MARKS

NO.	STATION	DESCRIPTION	OFFSET	ELEV.
13102	398+59 EB	DISK NW CORNER OF BRIDGE	36' RT.	950.45
13452	398+73 EB	DISK NW CORNER OF BRIDGE	79' RT.	951.43
13451	400+40 WB	DISK SE CORNER OF BRIDGE	79' LT.	950.29
13103	400+54 WB	DISK SE CORNER OF BRIDGE	36' LT.	950.22
714	408+12 EB	CHISLED SQUARE ON RCCP	84' RT.	936.49
13453	412+56 EB	DISK SW CORNER OF BRIDGE	165' RT.	957.28

PROJECT NO: 1010-00-72	HWY: IH 39	COUNTY: DANE	PLAN DETAILS	SHEET	E

FILE NAME : r:\Support\CADDS\Projects\d1_10100072\021204_pd.dgn PLOT DATE : 25-APR-2012 09:50 PLOT BY : DOTJ3J PLOT NAME : PLOT SCALE : 200.000000:1.000000 WISDOT/CADDS SHEET 42

2

STA. 431+05 EB
EXISTING 18" X 94' LINED CP
TO REMAIN

STA. 434+54 EB
EXISTING 18" X 87' LINED CP
TO REMAIN

STA. 436+70 WB TO STA. 445+68 WB LT.
STA. 447+30 WB TO STA. 453+65 WB LT.
EXISTING BEAM GUARD TO BE REMOVED

STA. 444+05 EB
EXISTING 54" X 367' LINED CP
TO REMAIN

STA. 448+06 EB
EXISTING 18" X 155' CP
TO REMAIN

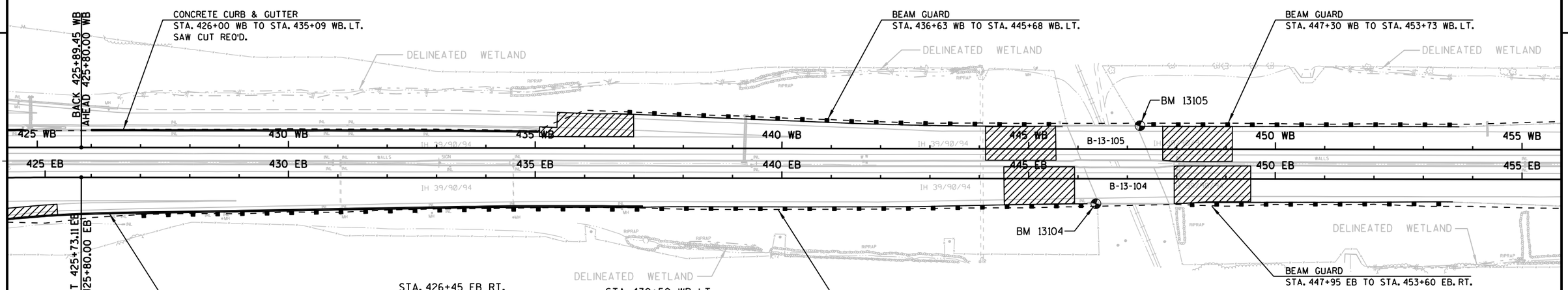

STA. 425+80 WB. LT.
EXISTING CRASH CUSHION
TO REMAIN

STA. 424+00 EB TO STA. 437+17 EB RT.
STA. 426+00 WB TO STA. 435+09 WB LT.
EXISTING CURB & GUTTER TO BE REMOVED

STA. 426+45 EB RT.
STA. 426+66 EB RT.
STA. 427+70 WB LT.
STA. 428+46 EB RT.
STA. 428+64 EB RT.
STA. 429+70 WB LT.
INLET COVERS TO BE ADJUSTED

STA. 430+50 WB LT.
STA. 430+68 WB LT.
STA. 430+85 EB RT.
STA. 430+90 EB LT.
STA. 430+90 WB RT.
STA. 431+05 EB LT.
STA. 431+05 WB RT.
STA. 431+06 EB RT.
INLET COVERS TO BE ADJUSTED

STA. 427+00 EB TO STA. 446+32 EB RT.
STA. 447+95 EB TO STA. 453+50 EB RT.
EXISTING BEAM GUARD TO BE REMOVED

STA. 431+20 WB LT.
STA. 432+67 EB RT.
STA. 432+80 WB LT.
STA. 432+93 EB RT.
STA. 433+16 EB RT.
STA. 433+27 EB LT.
INLET COVERS TO BE ADJUSTED

STA. 434+56 EB RT.
STA. 434+56 EB LT.
STA. 434+56 WB RT.
STA. 436+75 EB RT.
STA. 439+39 EB LT.
STA. 439+39 WB RT.
INLET COVERS TO BE ADJUSTED

BENCH MARKS

NO.	STATION	DESCRIPTION	OFFSET	ELEV.
13105	447+26 WB	DISK SE CORNER OF BRIDGE	47' LT.	921.92
13542	461+41 WB	DISK SE CORNER OF BRIDGE	65' LT.	929.59
13104	446+36 EB	DISK NW CORNER OF BRIDGE	51' RT.	920.11
13541	459+94 EB	DISK NW CORNER OF BRIDGE	64' RT.	929.04

STA. 461+47 WB
EXISTING 18" X 94' CP
TO REMAIN

STA. 475+07 EB
EXISTING 2-42" X 171' LINED CP'S
TO REMAIN

STA. 480+02 EB
EXISTING 18" X 106' LINED CP
TO REMAIN

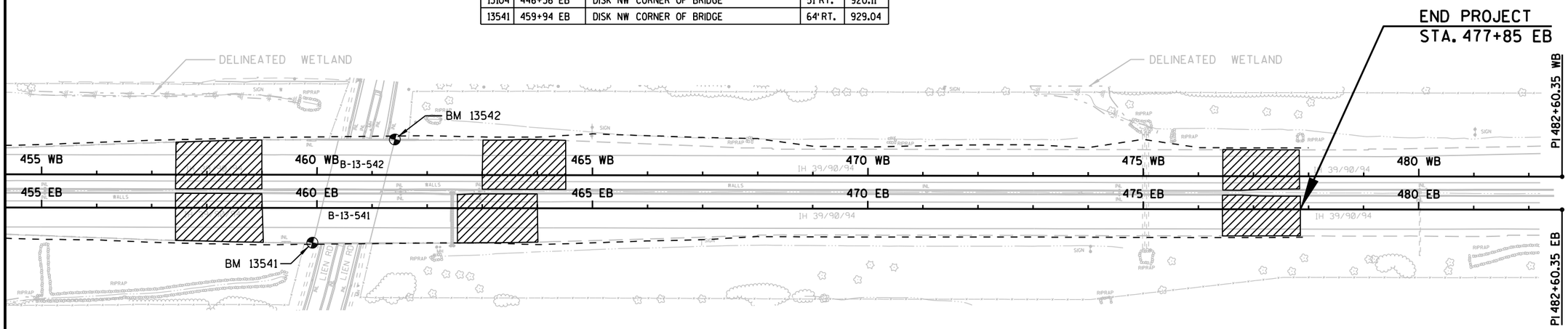

STA. 453+65 WB TO STA. 459+00 WB LT.
STA. 453+50 EB TO STA. 459+00 EB RT.
EXISTING BEAM GUARD TO BE ADJUSTED

STA. 462+20 WB TO STA. 463+90 WB LT.
STA. 461+85 EB TO STA. 462+94 EB RT.
EXISTING BEAM GUARD TO REMAIN

STA. 455+06 EB LT.
STA. 455+06 WB RT.
STA. 474+57 EB LT.
STA. 474+57 WB RT.
INLET COVERS TO BE ADJUSTED

PROJECT NO: 1010-00-72	HWY: IH 39	COUNTY: DANE	PLAN DETAILS	SHEET	E

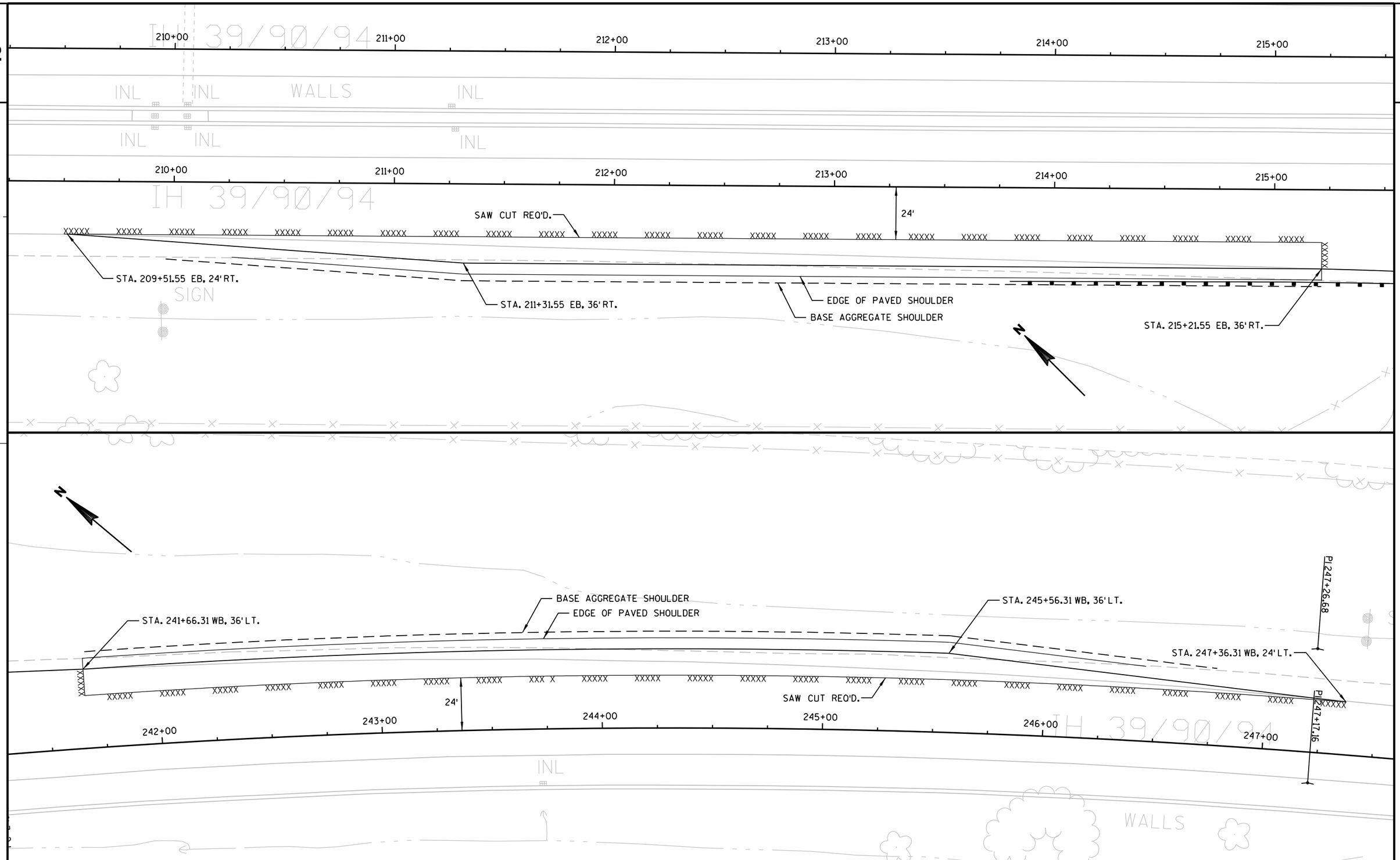

PROJECT NO: 1010-00-72	HWY: IH 39	COUNTY: DANE	RAMP EXTENSION DETAILS	SHEET	E

FILE NAME : r:\Support\CADDS\Projects\d1_10100072\021206_pd.dgn PLOT DATE : 25-APR-2012 09:50 PLOT BY : DOTJ3J PLOT NAME : PLOT SCALE : 40.000000:1.000000

FTMS STANDARD ABBREVIATIONS

CCTV	CLOSED CIRCUIT TELEVISION SITE
CB	CONTROLLER CABINET
PB	PULL BOX
S-F	STATE-FURNISHED
DMS	DYNAMIC MESSAGE SIGN
MB	METER BREAKER
EX	EXISTING

LEGEND

	EXISTING	PROPOSED
CCTV CAMERA AND POLE		
FTMS CONTROL CABINET AND BASE		
METER BREAKER PEDESTAL		
24"X36" STEEL PULL BOX		
ITS CONDUIT		
YAGI ANTENNA		
COMMUNICATIONS VAULT		
MICROWAVE DETECTOR AND POLE		
GROUND MOUNT SIGN		
POLE-MOUNTED CABINET		

FTMS GENERAL NOTES

THESE PLANS AND THE ASSOCIATED SPECIAL PROVISIONS REFLECT CONDITIONS KNOWN DURING THE DEVELOPMENT OF THE PLANS AND TECHNICAL SPECIAL PROVISIONS. ALL SCALES, DIMENSIONS AND LOCATIONS SHOWN IN THESE PLANS ARE APPROXIMATE. ACTUAL PHYSICAL FIELD CONDITIONS SHALL PROVIDE THE BASIS FOR THE APPLICATION OF WORK SHOWN IN THE PLANS. THE CONTRACTOR IS FULLY RESPONSIBLE FOR THE APPLICATION OF ALL WORK SHOWN IN THE PLANS TO THE ACTUAL PHYSICAL FIELD CONDITIONS TO PROVIDE A COMPLETE AND ACCEPTED PROJECT. IN THE EVENT THAT ACTUAL PHYSICAL FIELD CONDITIONS AFFECT OR PREVENT THE APPLICATION OR PROGRESSION OF ANY WORK SHOWN IN THE PLANS OR TECHNICAL SPECIAL PROVISIONS, THE CONTRACTOR SHALL NOTIFY THE ENGINEER IMMEDIATELY, AND PRIOR TO ANY FURTHER WORK ACTIVITY. THE CONTRACTOR SHALL IMMEDIATELY NOTIFY THE ENGINEER OF ANY LOCATION CHANGES OTHER THAN MINOR ADJUSTMENTS.

BE AWARE THAT ALL EXISTING UNDERGROUND AND ABOVE GROUND STRUCTURES AND FACILITIES WITHIN THE SCOPE OF THIS PROJECT MAY NOT BE LOCATED IN THE PLANS. THE CONTRACTOR IS FULLY RESPONSIBLE FOR LOCATING AND AVOIDING ALL UNDERGROUND AND ABOVE GROUND STRUCTURES AND FACILITIES.

BE AWARE THAT NO TEST BORINGS WERE MADE WHERE CONDUITS, PULLBOXES, POLES, CABINET FOUNDATIONS, OR OTHER EQUIPMENT IS TO BE INSTALLED. THE CONTRACTOR IS FULLY RESPONSIBLE FOR EXAMINING THE JOB SITE CONDITIONS BEFORE SUBMITTING BID PROPOSALS.

NO TREES (AND/OR SHRUBS) ARE TO BE REMOVED WITHOUT APPROVAL OF THE ENGINEER.

AREAS WITHIN THE RIGHT-OF-WAY DISTURBED SPECIFICALLY FOR FTMS CONSTRUCTION ARE TO BE RESTORED TO THE ORIGINAL CONDITION WITH TOPSOIL, FERTILIZER AND SEED, AND MULCH. RESTORATION FOR AREAS DISTURBED FOR OTHER CONSTRUCTION OPERATIONS BUT ALSO CONTAINING FTMS CONSTRUCTION WILL BE DONE ACCORDING TO REQUIREMENTS AND PAYMENT PROVISIONS FOR THE OTHER CONSTRUCTION OPERATIONS. NO PAYMENT WILL BE MADE FOR RESTORING AREAS DISTURBED FOR FTMS CONSTRUCTION OPERATIONS.

THE LOCATION OF EXISTING AND PROPOSED UTILITY INSTALLATIONS SHOWN ON THE PLANS ARE APPROXIMATE. THERE MAY BE OTHER UTILITY INSTALLATIONS WITHIN THE PROJECT AREA THAT ARE NOT SHOWN.

BE ADVISED THAT DUE TO RAMP, LANE, AND SHOULDER CLOSURE RESTRICTIONS, AND WORK UNDER OTHER CONTRACTS, SOME WORK MAY BE REQUIRED TO BE PERFORMED AT NIGHT.

THE CONTRACTOR IS RESPONSIBLE FOR COORDINATING RAMP, LANE, SHOULDER, AND ROADWAY CLOSURES WITH OTHER CONTRACTS IN THE AREA.

CONTACT THE WISDOT STATEWIDE TRAFFIC OPERATIONS CENTER AT (414) 227-2166 FIVE (5) WORKING DAYS PRIOR TO ENTERING ANY EXISTING WISDOT FTMS OR ITS CABINET.

HAND DIG TRENCHES CROSSING EXISTING CONDUIT CONTAINING FIBER OPTIC CABLE.

VISUALLY VERIFY DEPTHS OF EXISTING CONDUITS CONTAINING FIBER OPTIC CABLE PRIOR TO CROSSING BY DIRECTIONAL BORE OR SPECIAL METHOD.

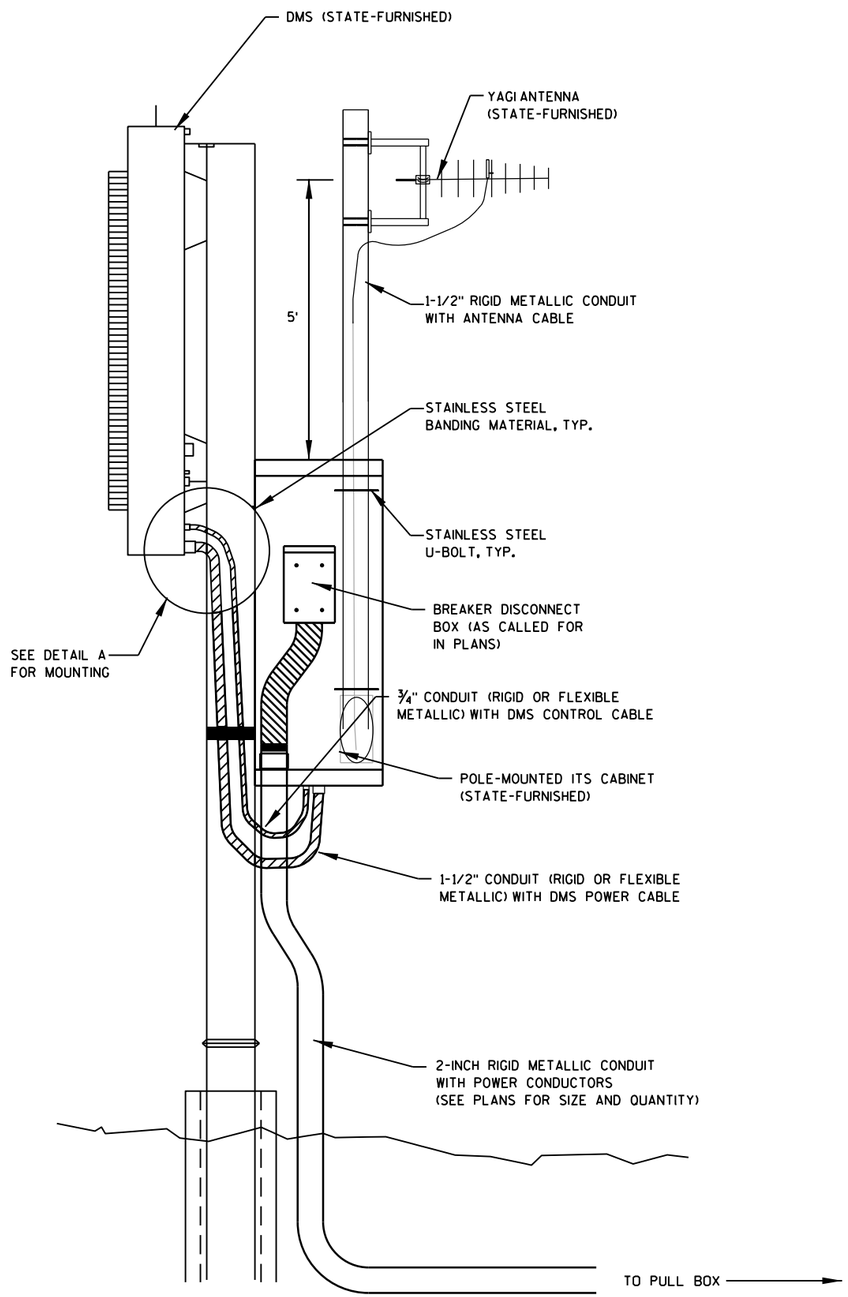

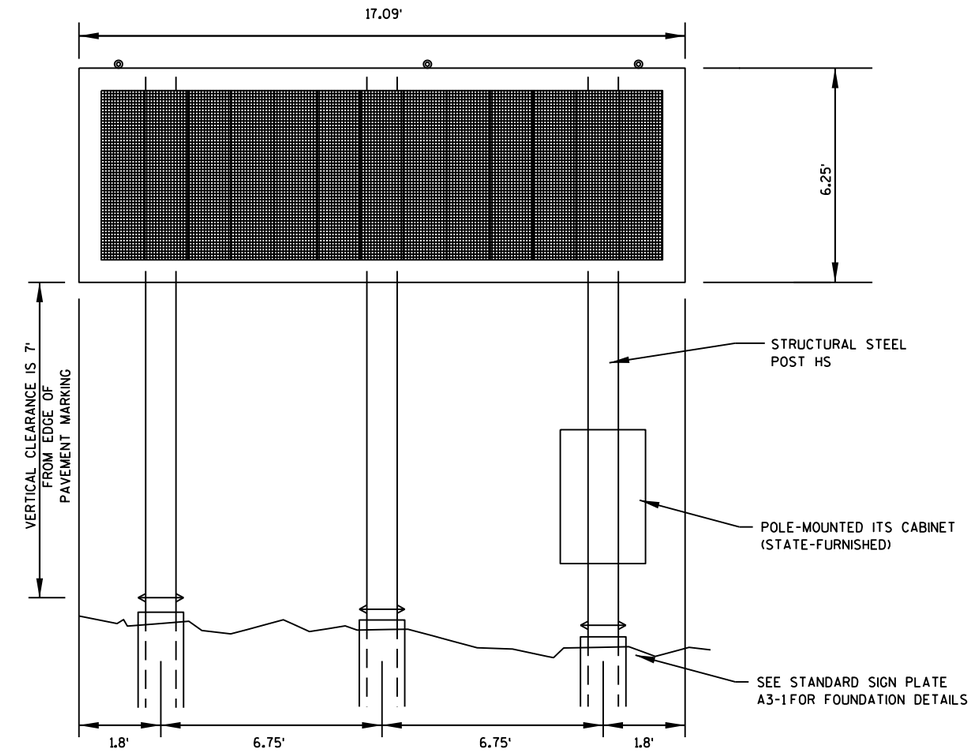

DMS-13-0023 IH 39/90/94 NB AT HANSON RD.
ELEVATION VIEW

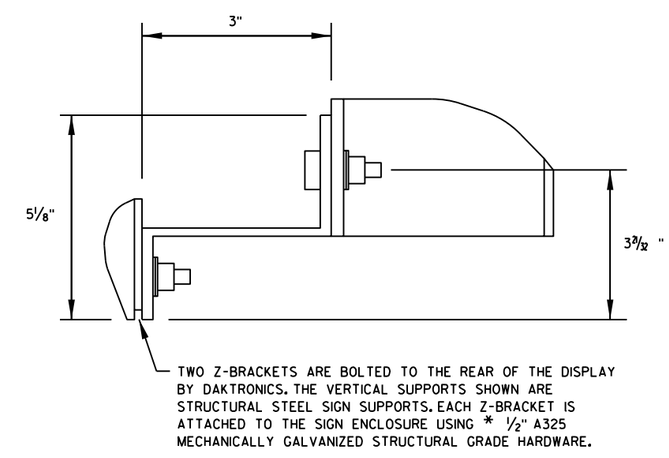

Z-BRACKETS ARE
3" X 2 11/16 " X 1/4"
WEB X FLANGE X THINKNESS
ALUMINUM 6061-T6-ALLOY

DETAIL A

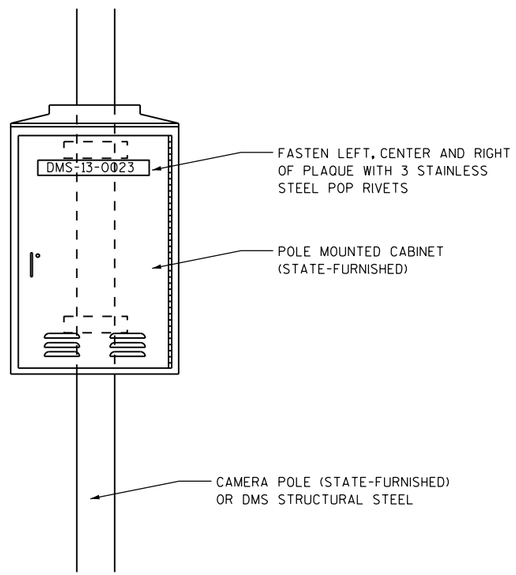

CONTROL CABINET IDENTIFICATION PLAQUE REQUIREMENTS AND PLACEMENTS

(TYPICAL ALL CONTROL CABINETS)

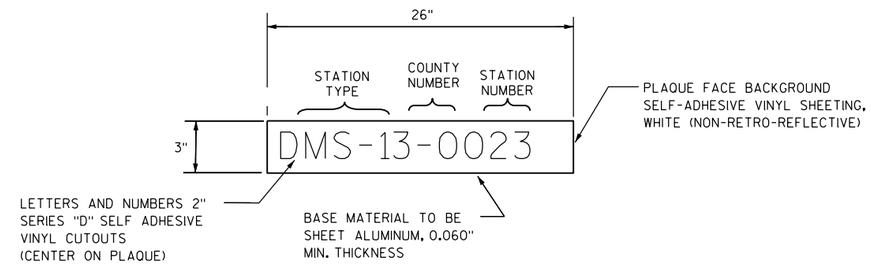

CONTROL CABINET IDENTIFICATION PLAQUE DETAIL

LEGEND STATION TYPE

RM - RAMP METER
CCTV - CLOSED CIRCUIT TELEVISION
ATR - AUTOMATIC TRAFFIC RECORDER
SDS - SYSTEM DETECTOR STATION
MD - MICROWAVE DETECTOR

NOTES

1) TWO PLAQUES PER CABINET REQUIRED ON CONTROL CABINET.
2) FASTEN ONE PLAQUE ON FRONT DOOR, UPPER HALF.
3) FASTEN ONE PLAQUE ON SIDE FACING LOCAL STREET. IF NO LOCAL STREET NEARBY, OR IF SUCH LOCATION COINCIDES WITH LOCATION OF PLAQUE IN NOTE 2, FASTEN PLAQUE ON REAR OF CABINET, UPPER HALF.
4) COUNTY NUMBER NOT REQUIRED ON RAMP METER CABINETS.

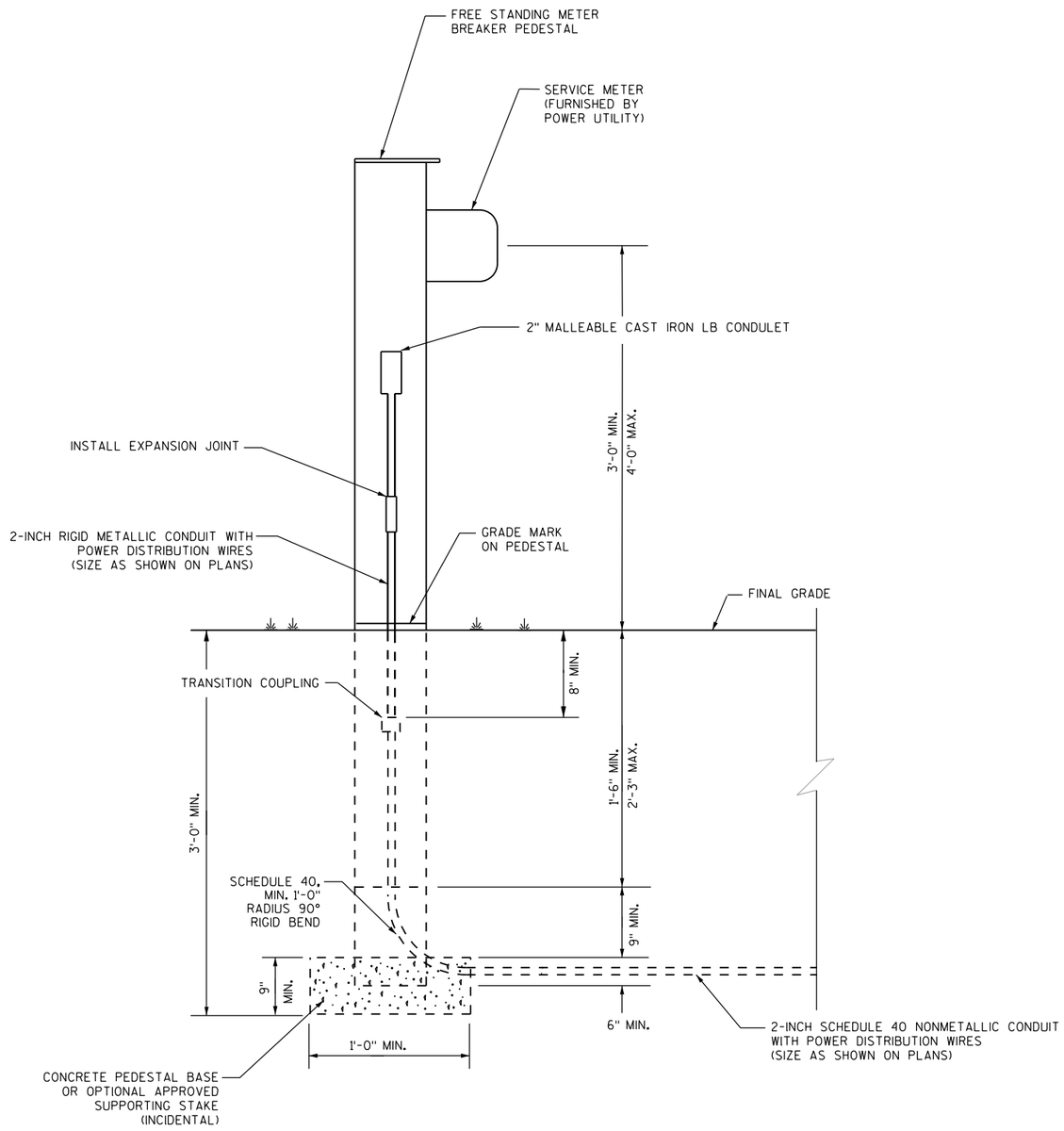

ELECTRICAL SERVICE METER BREAKER PEDESTAL

NOTES

1) MINIMUM REQUIREMENT SHOWN. ADDITIONAL BREAKERS MAY BE REQUIRED.

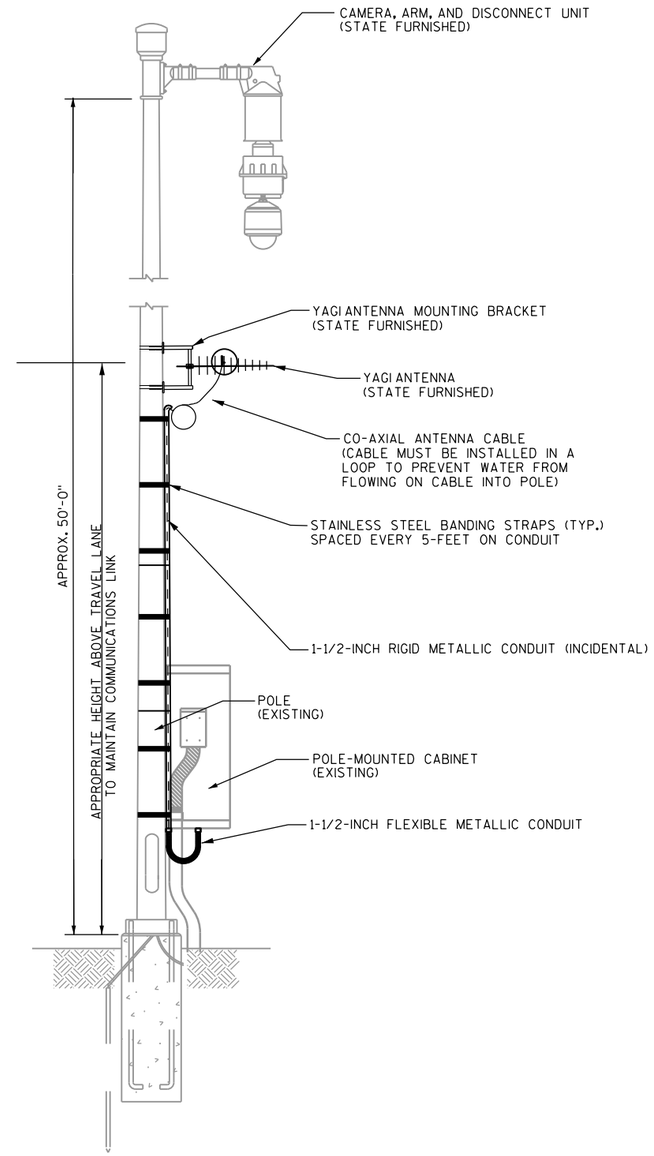

CAMERA POLE WITH CAMERA LOWERING HARDWARE

(EX-CCTV-13-0051)

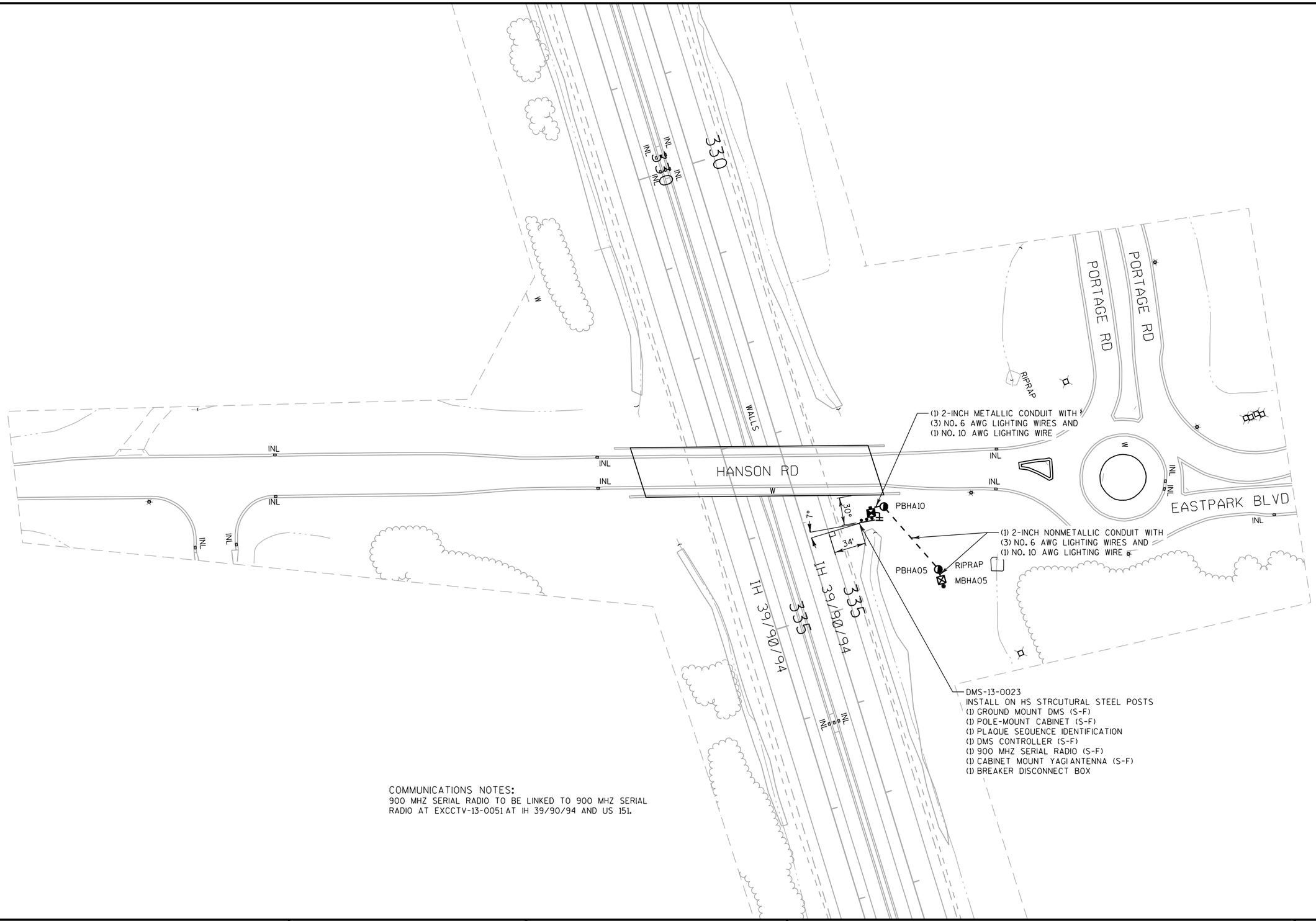

COMMUNICATIONS NOTES:
900 MHZ SERIAL RADIO TO BE LINKED TO 900 MHZ SERIAL RADIO AT EXCCTV-13-0051 AT IH 39/90/94 AND US 151.

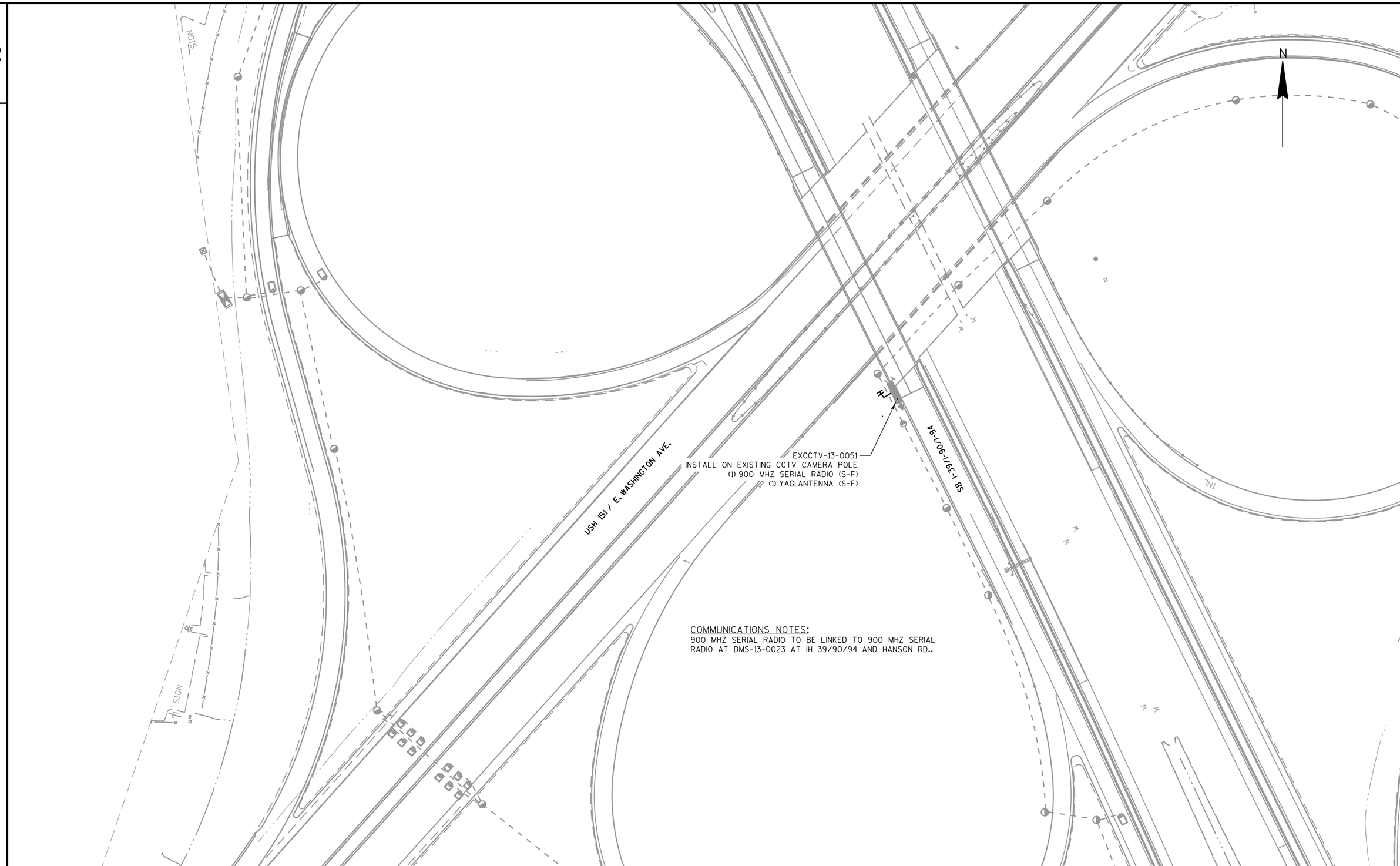

COMMUNICATIONS NOTES:
900 MHZ SERIAL RADIO TO BE LINKED TO 900 MHZ SERIAL RADIO AT DMS-13-0023 AT IH 39/90/94 AND HANSON RD..

RUNOFF COEFFICIENT TABLE

	HYDROLOGIC SOIL GROUP											
	A			B			C			D		
	SLOPE RANGE (PERCENT)			SLOPE RANGE (PERCENT)			SLOPE RANGE (PERCENT)			SLOPE RANGE (PERCENT)		
LAND USE:	0-2	2-6	6 & OVER	0-2	2-6	6 & OVER	0-2	2-6	6 & OVER	0-2	2-6	6 & OVER
ROW CROPS	.08 .22	.16 .30	.22 .38	.12 .26	.20 .34	.27 .44	.15 .30	.24 .37	.33 .50	.19 .34	.28 .41	.38 .56
MEDIAN STRIP-TURF	.19 .24	.20 .26	.24 .30	.19 .25	.22 .28	.26 .33	.20 .26	.23 .30	.30 .37	.20 .27	.25 .32	.30 .40
SIDE SLOPE-TURF			.25 .32			.27 .34			.28 .36			.30 .38
PAVEMENT:												
ASPHALT	.70 - .95											
CONCRETE	.80 - .95											
BRICK	.70 - .80											
DRIVES, WALKS	.75 - .85											
ROOFS	.75 - .95											
GRAVEL ROADS, SHOULDERS	.40 - .60											

TOTAL PROJECT AREA = 232.40 ACRES
TOTAL AREA EXPECTED TO BE DISTURBED BY CONSTRUCTION ACTIVITIES = 108.10ACRES

2

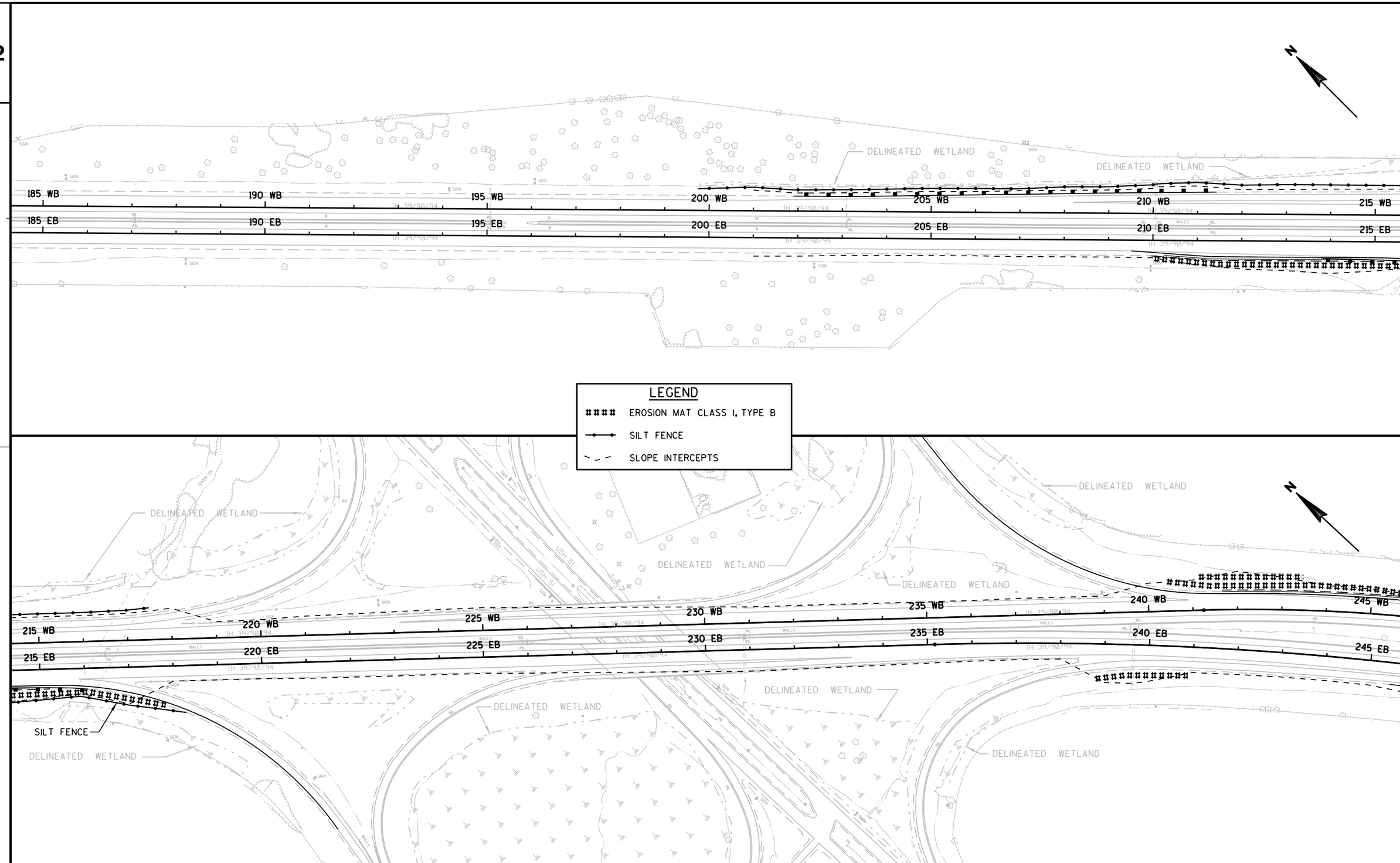

2

PROJECT NO:1010-00-72	HWY:IH 39	COUNTY:DANE	EROSION CONTROL	SHEET	E

FILE NAME : r:\Support\CADDS\Projects\d1_10100072\022001_ec.dgn PLOT DATE : 25-APR-2012 09:51 PLOT BY : DOTJ3J PLOT NAME : PLOT SCALE : 200.000000:1.000000 WISDOT/CADDS SHEET 42

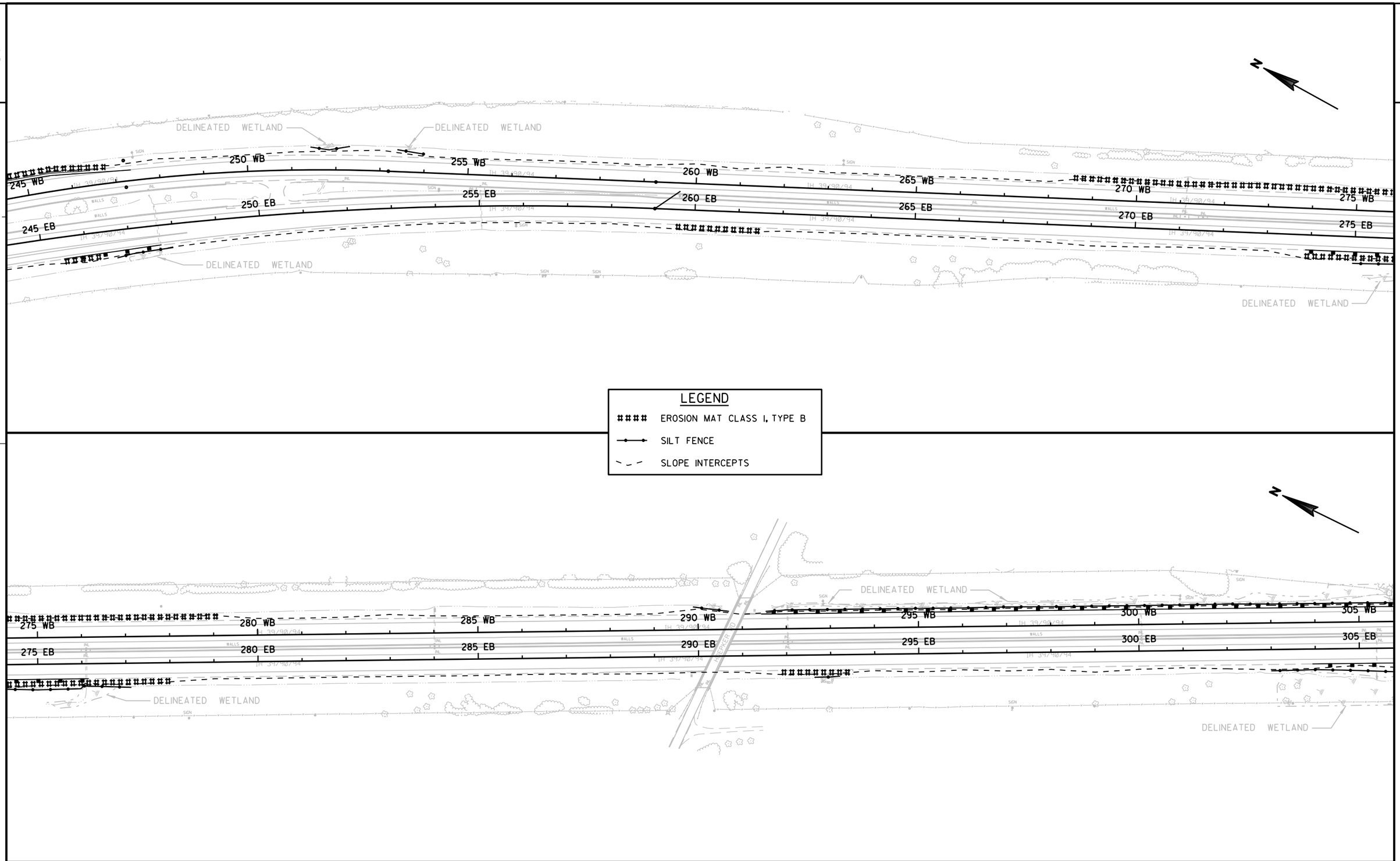

PROJECT NO:1010-00-72	HWY:IH 39	COUNTY:DANE	EROSION CONTROL	SHEET	E

FILE NAME : r:\Support\CADDS\Projects\d1_10100072\022002_ec.dgn PLOT DATE : 25-APR-2012 09:51 PLOT BY : DOTJ3J PLOT NAME : PLOT SCALE : 200.000000:1.000000 WISDOT/CADDS SHEET 42

2

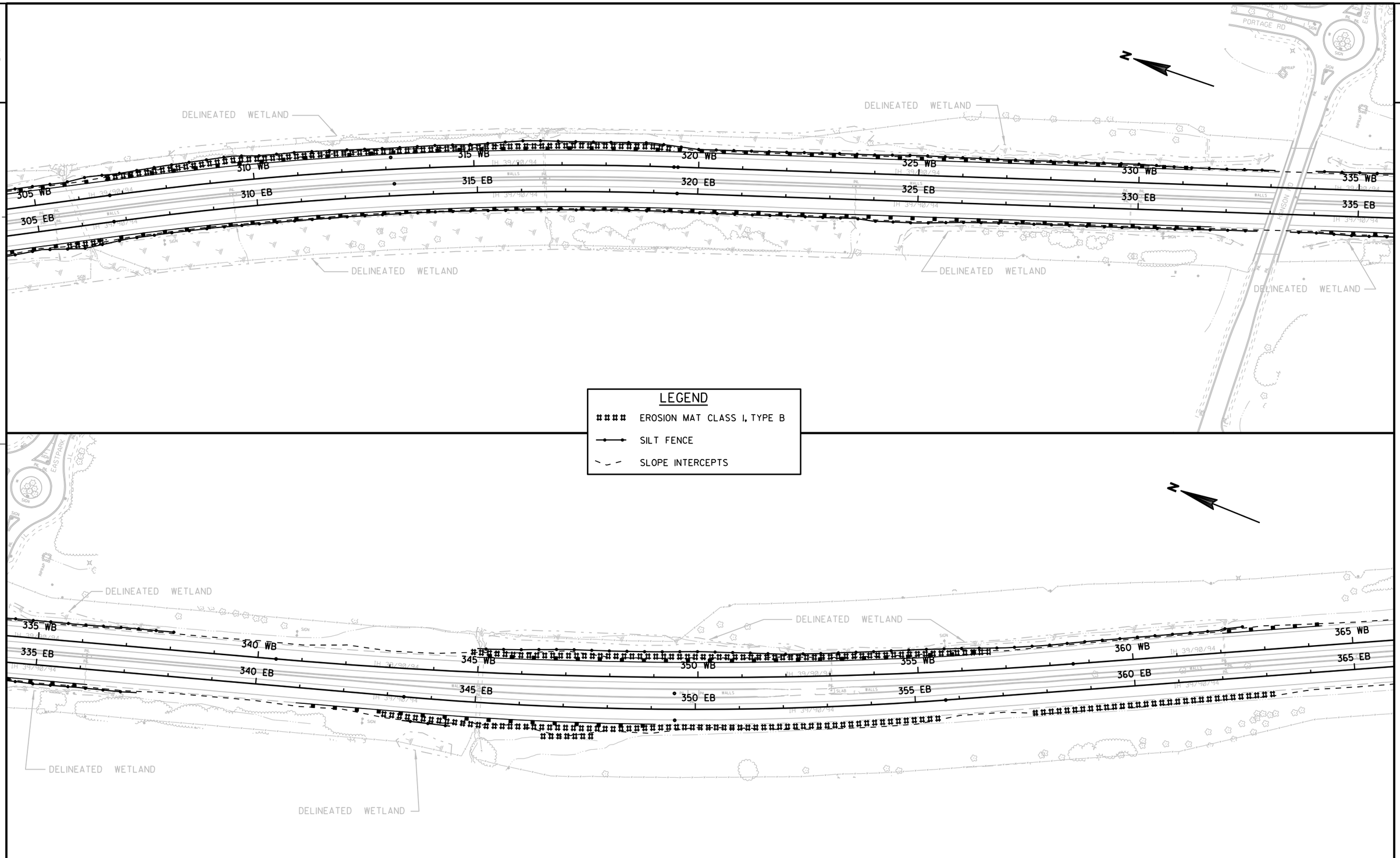

LEGEND

- #### EROSION MAT CLASS I, TYPE B
- SILT FENCE
- SLOPE INTERCEPTS

2

PROJECT NO:1010-00-72	HWY:IH 39	COUNTY:DANE	EROSION CONTROL	SHEET	E

2

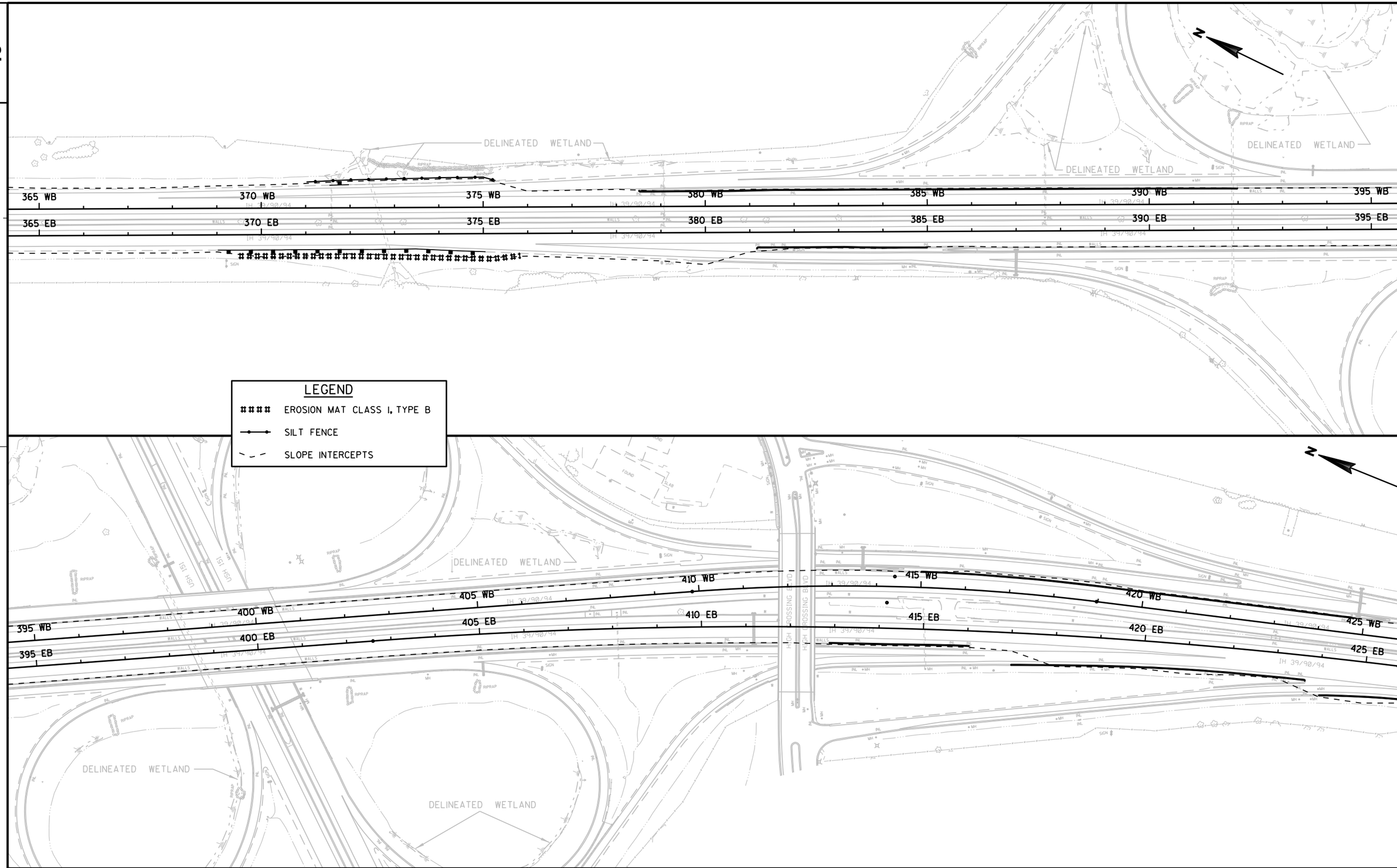

2

PROJECT NO:1010-00-72	HWY:IH 39	COUNTY:DANE	EROSION CONTROL	SHEET	E

FILE NAME : r:\Support\CADDS\Projects\d1_10100072\022004_ec.dgn PLOT DATE : 25-APR-2012 14:39 PLOT BY : DOTJ3J PLOT NAME : PLOT SCALE : 200.000000:1.000000 WISDOT/CADDS SHEET 42

2

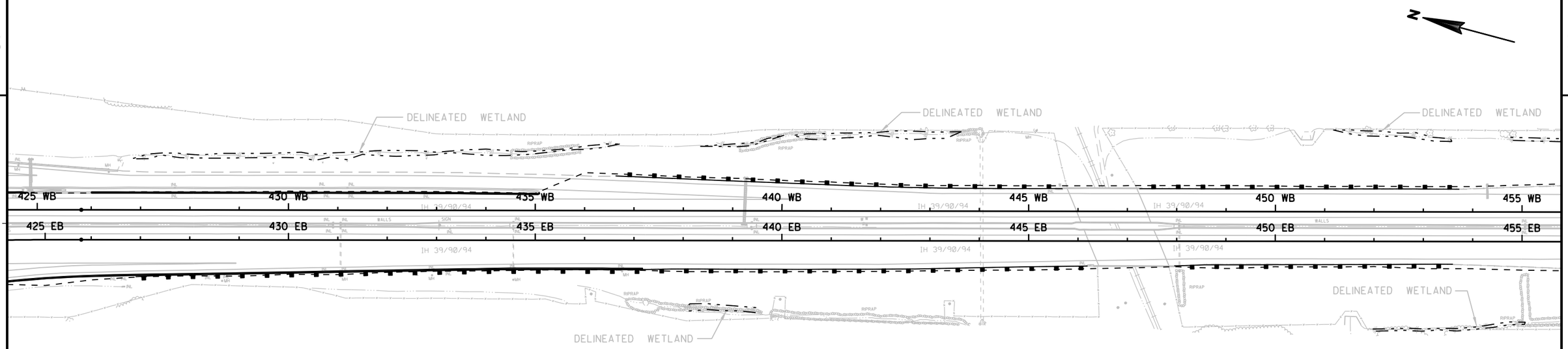

LEGEND

- #### EROSION MAT CLASS I, TYPE B
- SILT FENCE
- SLOPE INTERCEPTS

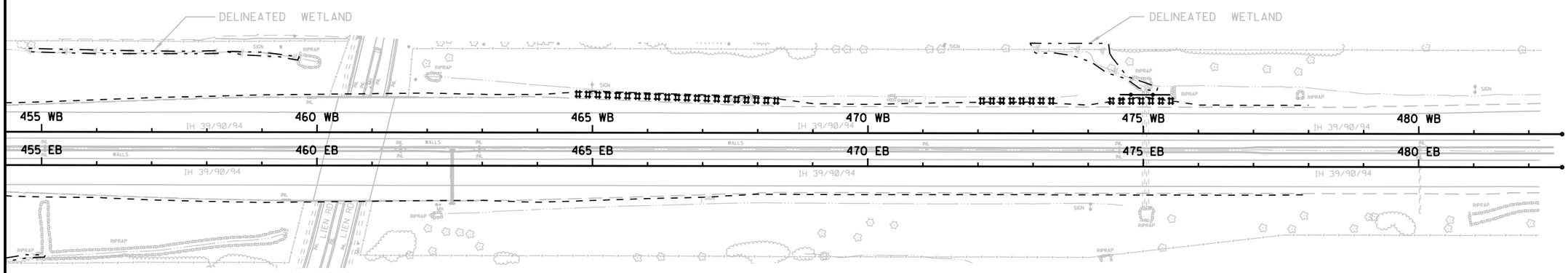

PROJECT NO:1010-00-72	HWY:IH 39	COUNTY:DANE	EROSION CONTROL	SHEET	E

SILT FENCE LOCATIONS FOR WETLAND PROTECTION			
199+80 WB	50' LT	215+00 EB	75' RT
200+00 WB	50' LT	216+00 EB	68' RT
201+00 WB	90' RT	217+00 EB	90' RT
202+00 WB	44' RT	218+00 EB	44' RT
203+00 WB	50' LT		
204+00 WB	50' LT		
205+00 WB	51' LT		
206+00 WB	52' LT		
207+00 WB	54' LT		
208+00 WB	56' LT		
209+00 WB	57' LT		
210+00 WB	65' LT		
211+00 WB	68' LT		
212+00 WB	65' LT		
213+00 WB	66' LT		
214+00 WB	68' LT		
215+00 WB	69' LT		
216+00 WB	69' LT		
217+00 WB	70' LT		
217+50 WB	70' LT		

SILT FENCE LOCATIONS FOR WETLAND PROTECTION			
246+85 EB	60' RT	290+00 WB	49 ' LT
247+00 EB	60' RT	290+60 WB	43' LT
247+70 EB	57' RT		
247+80 EB	55' RT	291+50 WB	40' LT
		292+00 WB	43' LT
251+50 WB	47' LT	293+00 WB	43' LT
252+00 WB	47' LT	294+00 WB	43' LT
252+10 WB	48' LT	295+00 WB	43' LT
		296+00 WB	43' LT
253+40 WB	47' LT	297+00 WB	44' LT
254+00 WB	47' LT	298+00 WB	44' LT
		299+00 WB	44' LT
275+80 EB	55' RT	300+00 WB	42' LT
276+00 EB	50' RT	301+00 WB	43' LT
276+10 EB	48'RT	302+00 WB	43' LT
276+50 EB	48' RT	303+00 WB	43' LT
276+90 EB	51' RT	304+00 WB	44' LT
		305+00 WB	45' LT

SILT FENCE LOCATIONS FOR WETLAND PROTECTION					
303+00 EB	47' RT	305+00 WB	45' LT	334+00 EB	47' RT
304+00 EB	47' RT	306+00 WB	45' LT	334+60 EB	45' RT
305+00 EB	47' RT	307+00 WB	45' LT	335+00 EB	45' RT
306+00 EB	47' RT	308+00 WB	48' LT	336+00 EB	44' RT
307+00 EB	45' RT	309+00 WB	47' LT	337+00 EB	45' RT
308+00 EB	42' RT	310+00 WB	47' LT	337+15 EB	45' RT
309+00 EB	42' RT	311+00 WB	47' LT		
310+00 EB	42' RT	312+00 WB	47' LT	343+25 EB	62' RT
311+00 EB	42' RT	313+00 WB	47' LT	344+00 EB	64' RT
312+00 EB	42' RT	314+00 WB	47' LT	344+50 EB	64' RT
313+00 EB	42' RT	315+00 WB	46' LT		
314+00 EB	42' RT	316+00 WB	54' LT	345+00 WB	55' LT
315+00 EB	42' RT	317+00 WB	55' LT	346+00 WB	58' LT
316+00 EB	42' RT	318+00 WB	55' LT	347+00 WB	66' LT
317+00 EB	42' RT	319+00 WB	55' LT	348+00 WB	54' LT
318+00 EB	42' RT	320+00 WB	45' LT	349+00 WB	54' LT
319+00 EB	42' RT	321+00 WB	45' LT	350+00 WB	54' LT
320+00 EB	42' RT	322+00 WB	45' LT	351+00 WB	54' LT
321+00 EB	43' RT	323+00 WB	45' LT	352+00 WB	49' LT
322+00 EB	44' RT	324+00 WB	45' LT	352+80 WB	46' LT
323+00 EB	45' RT	325+00 WB	46' LT	353+00 WB	46' LT
323+50 EB	45' RT	326+00 WB	44' LT	354+00 WB	45' LT
324+00 EB	52' RT	327+00 WB	43' LT	355+00 WB	44' LT
325+00 EB	52' RT	328+00 WB	42' LT	356+00 WB	52' LT
326+00 EB	46' RT	329+00 WB	41' LT	357+00 WB	48' LT
327+00 EB	45' RT	330+00 WB	41' LT	358+00 WB	49' LT
328+00 EB	44' RT	331+00 WB	40' LT	359+00 WB	54' LT
329+00 EB	42' RT	331+45 WB	38.5' LT	360+00 WB	54' LT
330+00 EB	43' RT	332+00 WB	42' LT	361+00 WB	55' LT
331+00 EB	42' RT	333+00 WB	44' LT	362+00 WB	54' LT
331+45 EB	42' RT			362+06 WB	54' LT
332+00 EB	43' RT	334+10 WB	44' LT	362+45 WB	60' LT
332+15 EB	45' RT	334+75 WB	40' LT		
		335+00 WB	40' LT		
		336+00 WB	40' LT		
		337+00 WB	41' LT		
		337+90 WB	41' LT		

SILT FENCE LOCATIONS FOR WETLAND PROTECTION	
371+30 WB	62' LT
372+00 WB	62' LT
373+00 WB	66' LT
373+25 WB	66' LT
374+00 WB	69' LT
375+00 WB	69' LT

SILT FENCE LOCATIONS FOR WETLAND PROTECTION	
474+80 WB	73' LT
475+00 WB	73' LT
475+30 WB	73' LT

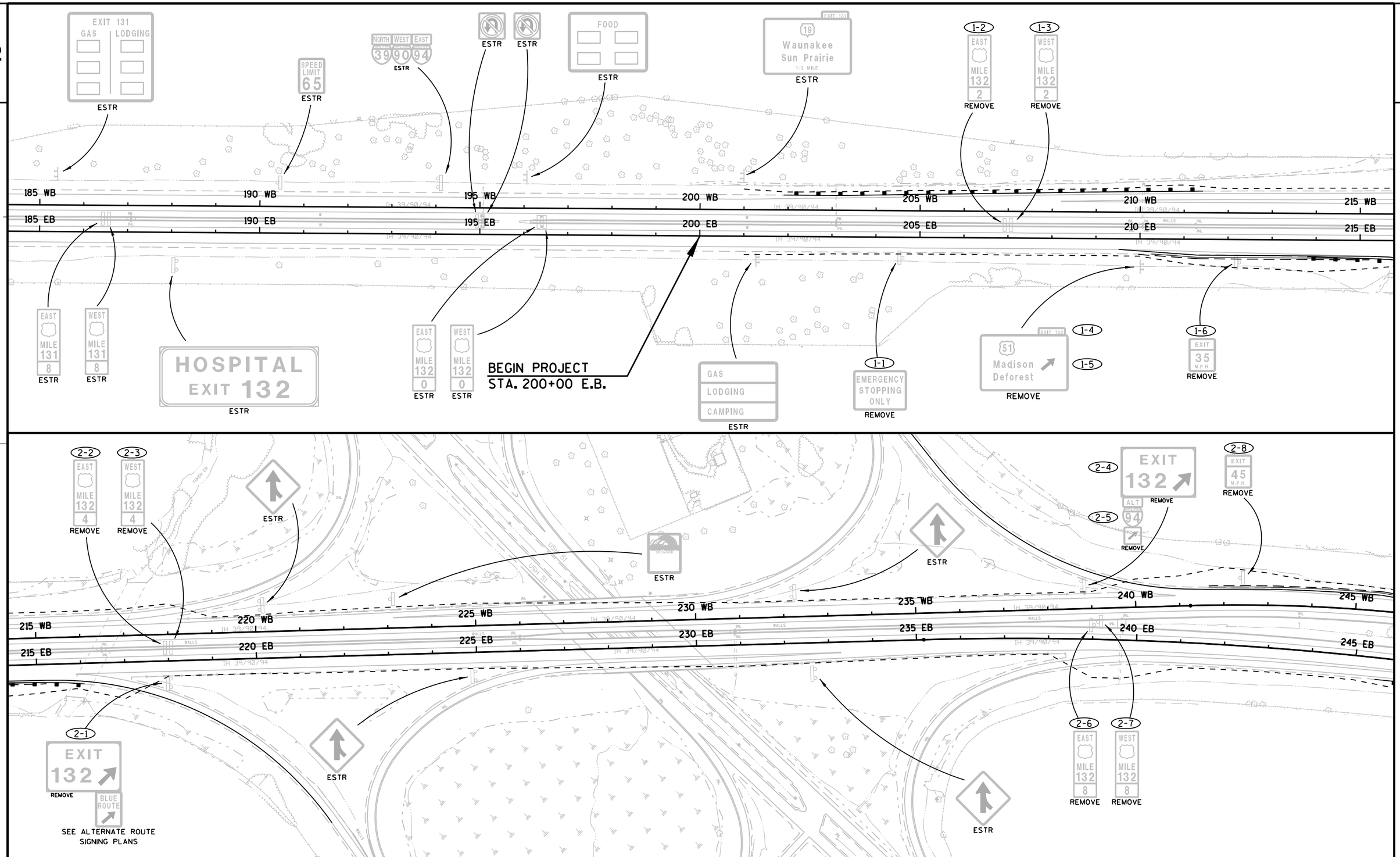

PROJECT NO: 1010-00-72	HWY: IH 39	COUNTY: DANE	SIGN REMOVALS	SHEET	E

FILE NAME : r:\Support\CADDS\Projects\d1_10100072\023201_ps.dgn PLOT DATE : 25-APR-2012 09:51 PLOT BY : DOTJ3J PLOT NAME : PLOT SCALE : 200.000000:1.000000 WISDOT/CADDS SHEET 42

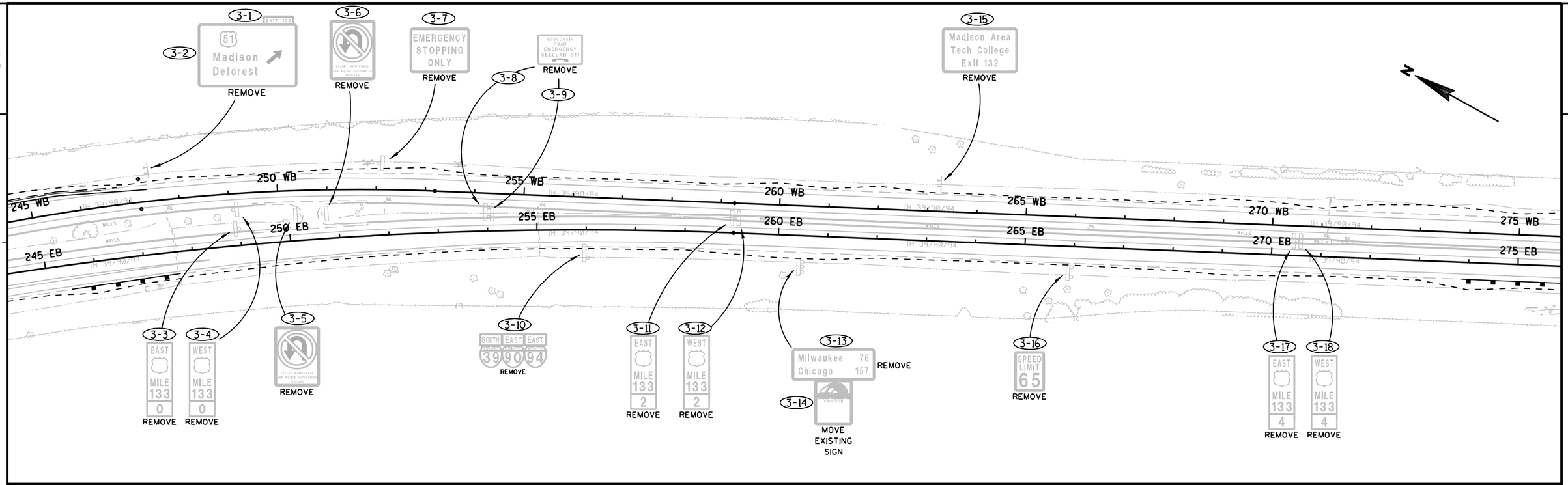

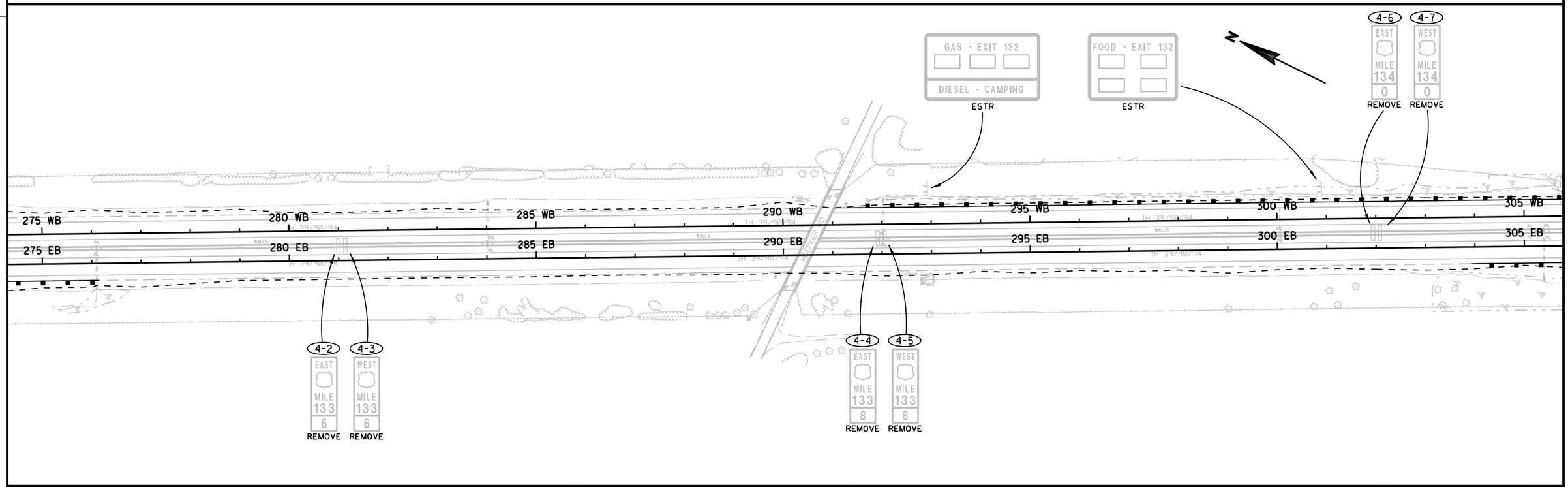

PROJECT NO:1010-00-72	HWY:IH 39	COUNTY:DANE	SIGN REMOVALS	SHEET	E

2

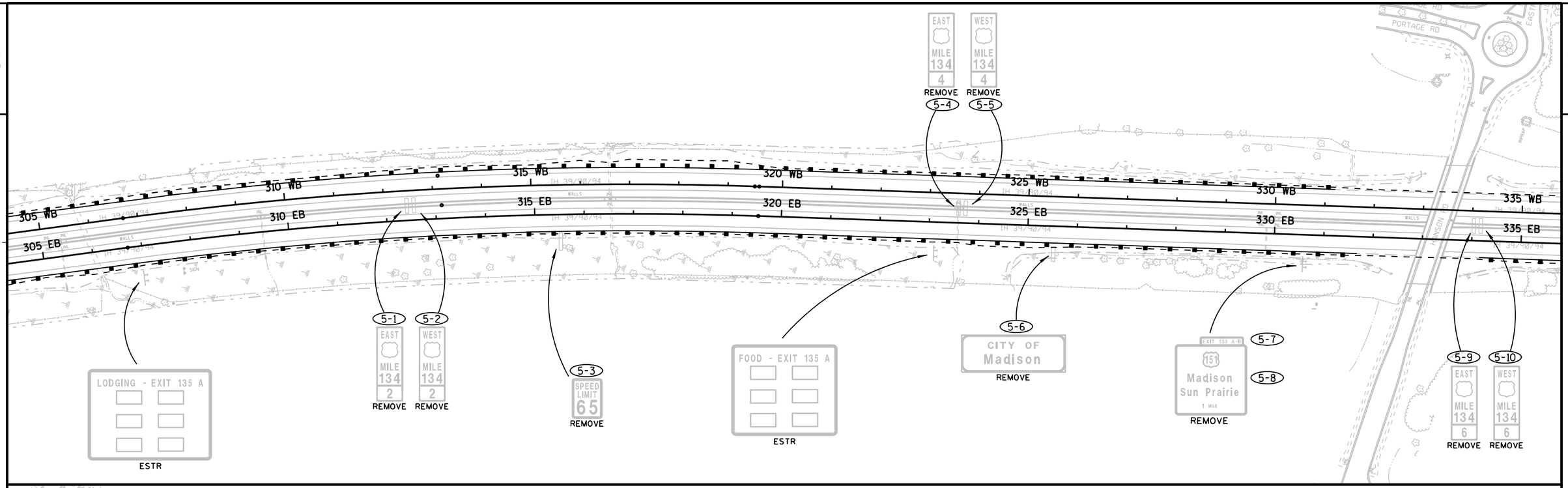

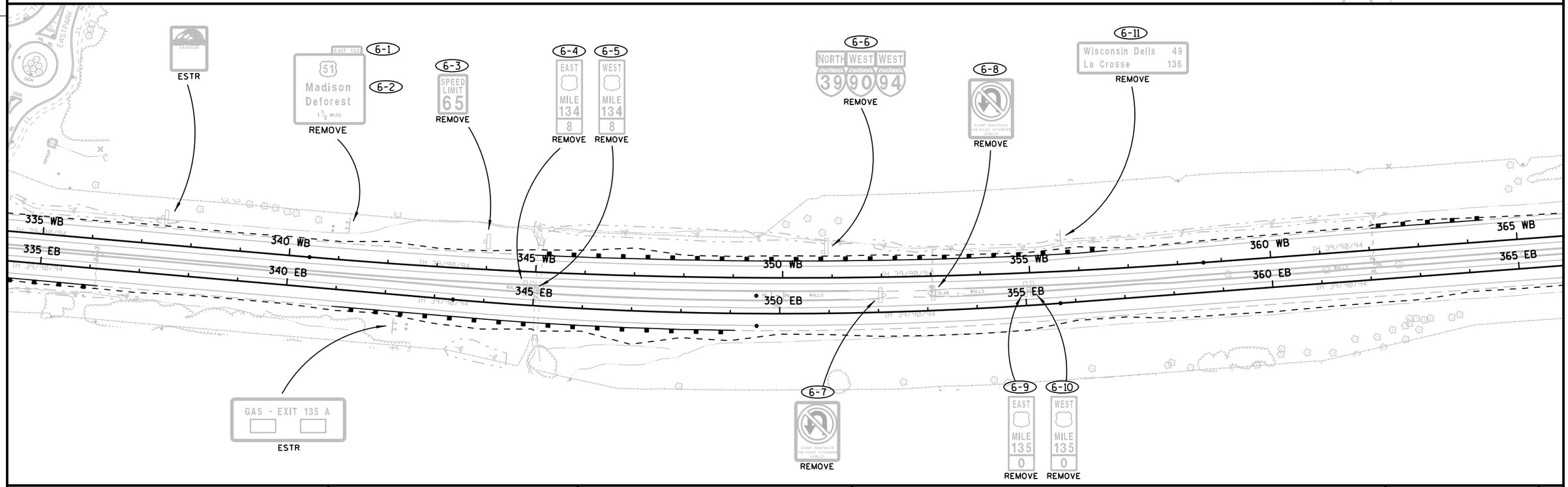

PROJECT NO:1010-00-72	HWY:IH 39	COUNTY:DANE	SIGN REMOVALS	SHEET	E

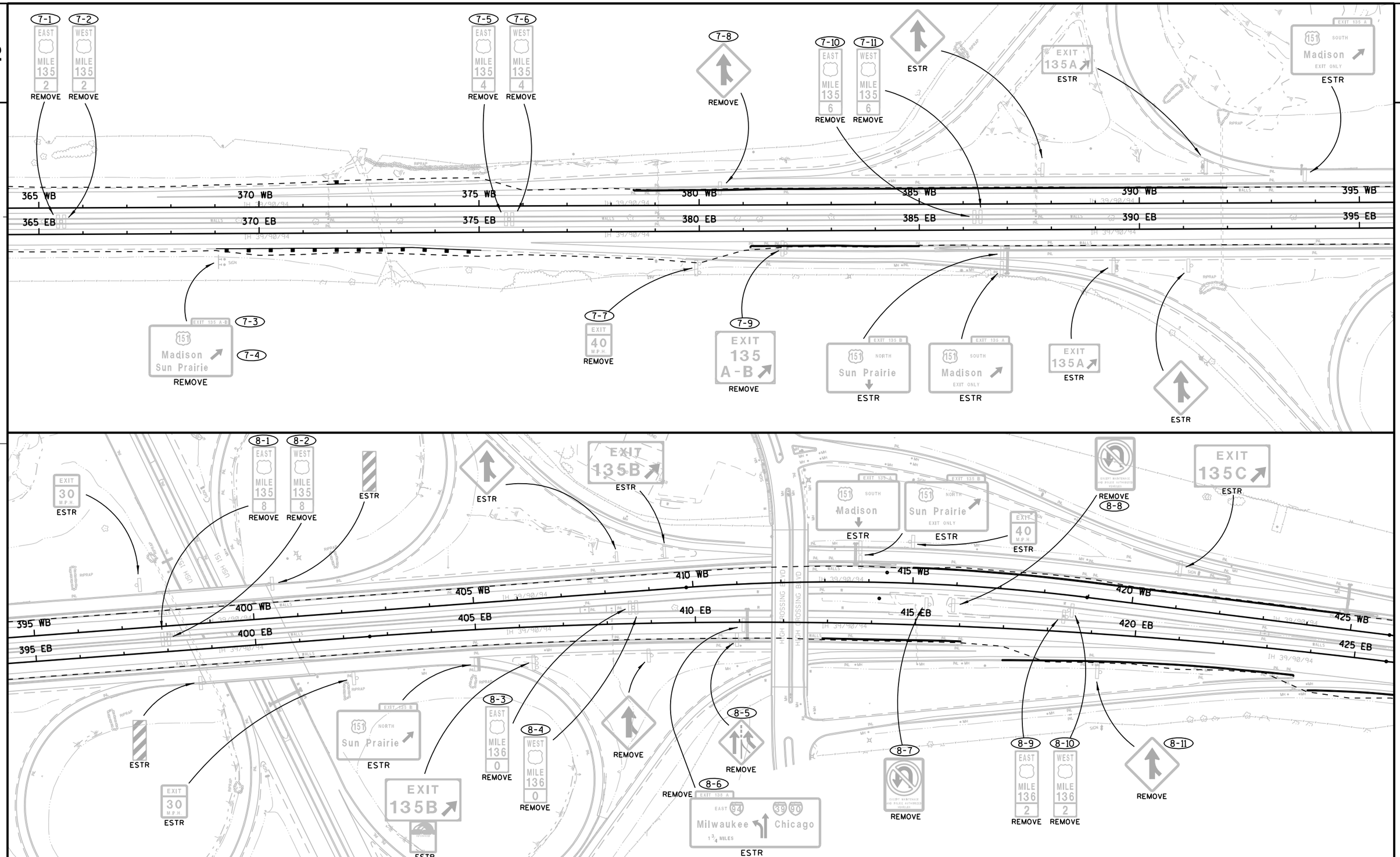

PROJECT NO:1010-00-72	HWY:IH 39	COUNTY:DANE	SIGN REMOVALS	SHEET	E

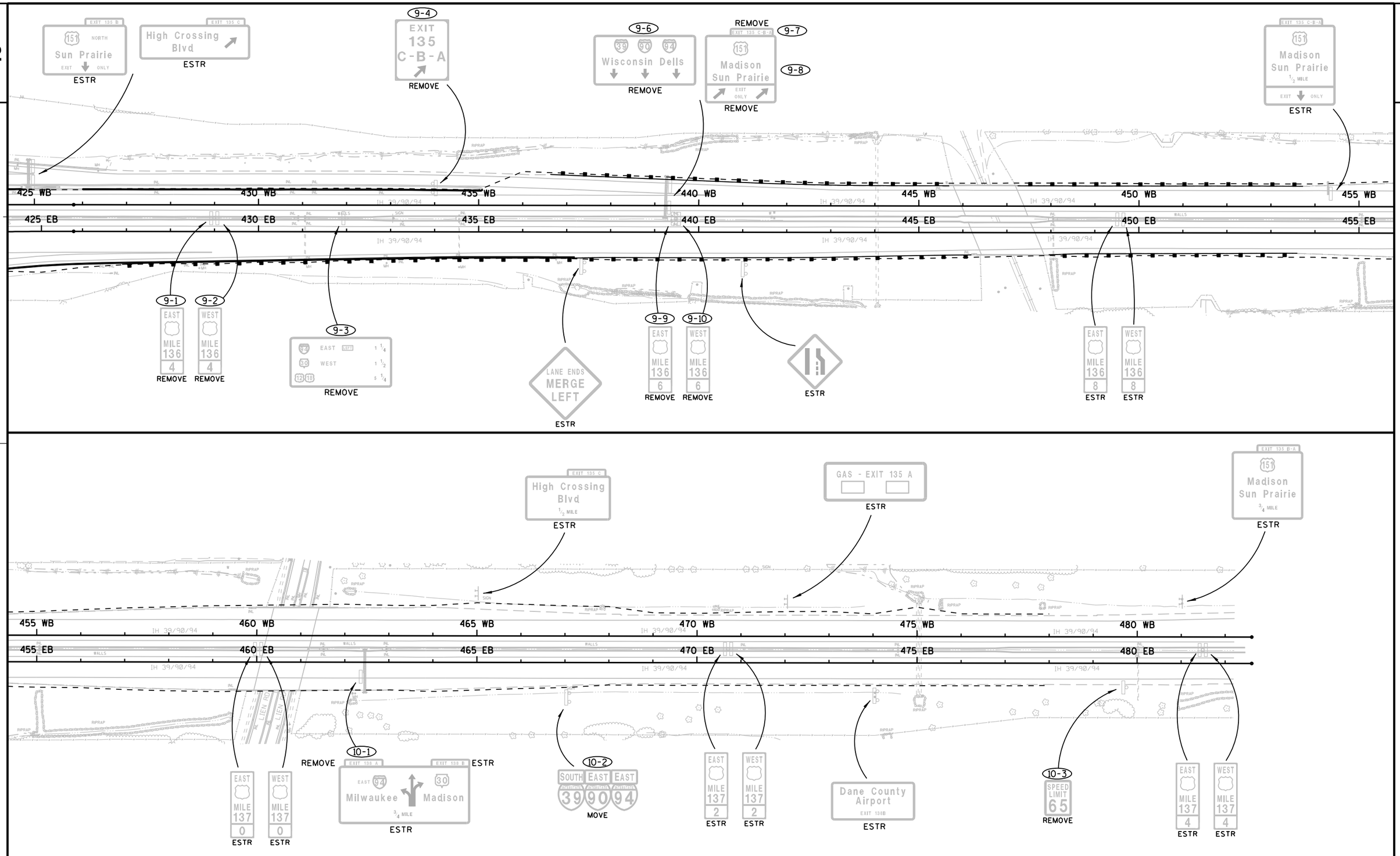

PROJECT NO:1010-00-72	HWY:IH 39	COUNTY:DANE	SIGN REMOVALS	SHEET	E

FILE NAME : r:\Support\CADDS\Projects\d1_10100072\023205_ps.dgn PLOT DATE : 25-APR-2012 09:52 PLOT BY : DOTJ3J PLOT NAME : PLOT SCALE : 200.000000:1.000000 WISDOT/CADDS

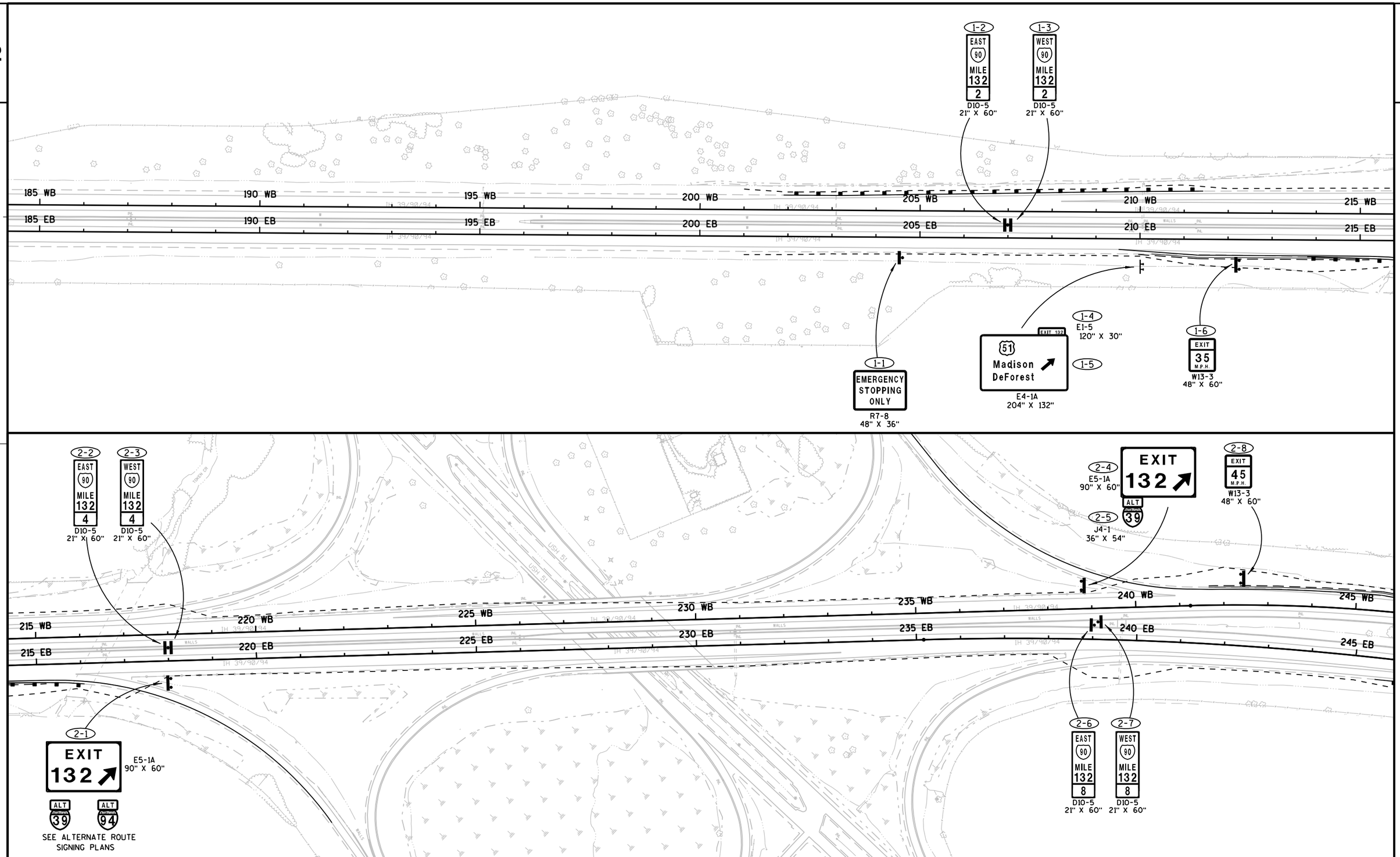

PROJECT NO:1010-00-72	HWY:IH 39	COUNTY:DANE	PERMANENT SIGNING	SHEET	E

FILE NAME : r:\Support\CADDS\Projects\d1_10100072\023206_ps.dgn PLOT DATE : 25-APR-2012 09:52 PLOT BY : DOTJ3J PLOT NAME : PLOT SCALE : 200.000000:1.000000 WISDOT/CADDS SHEET 42

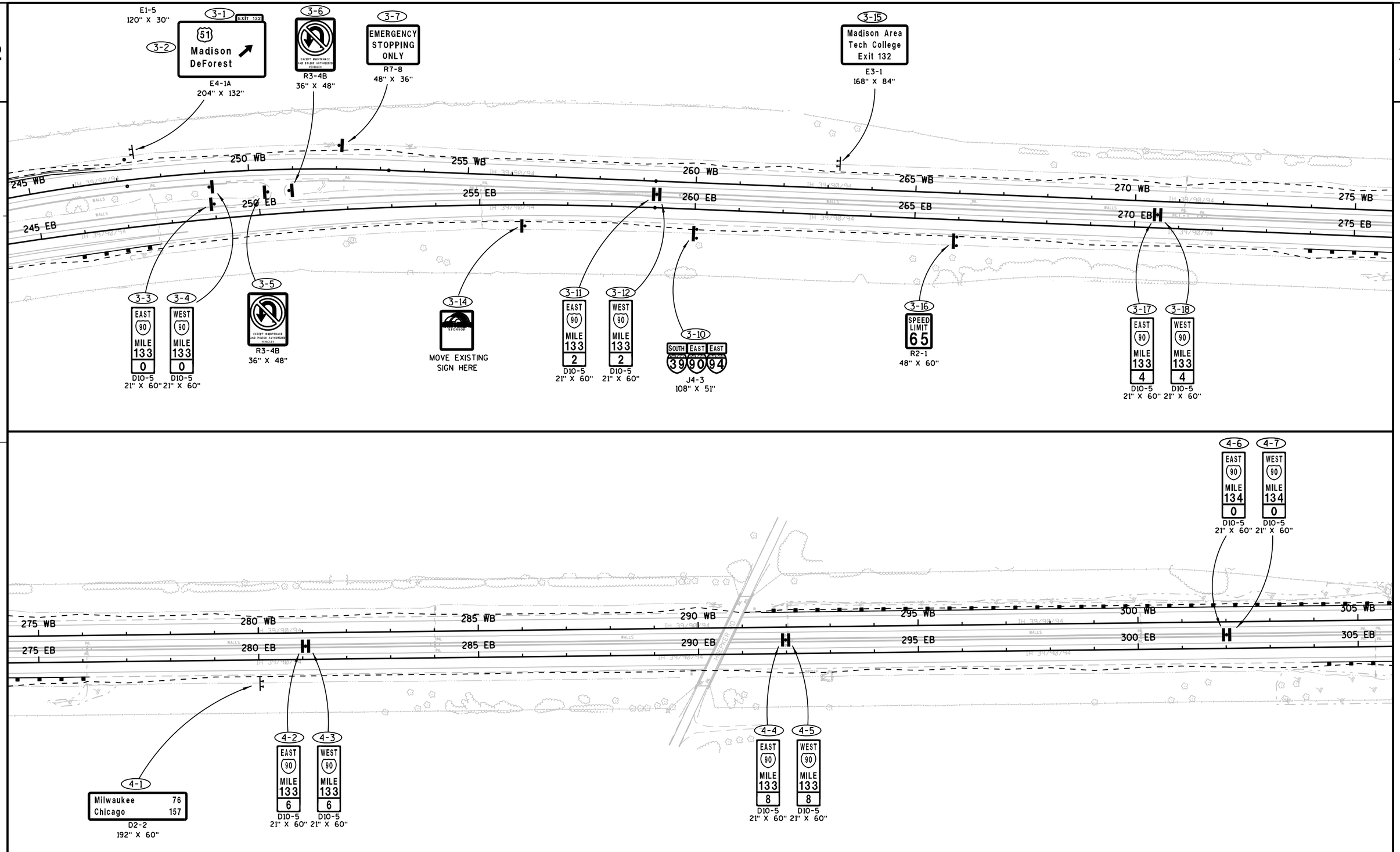

PROJECT NO:1010-00-72	HWY:IH 39	COUNTY:DANE	PERMANENT SIGNING	SHEET	E

FILE NAME : r:\Support\CADDS\Projects\d1_10100072\023207_ps.dgn PLOT DATE : 25-APR-2012 09:52 PLOT BY : DOTJ3J PLOT NAME : PLOT SCALE : 200.000000:1.000000

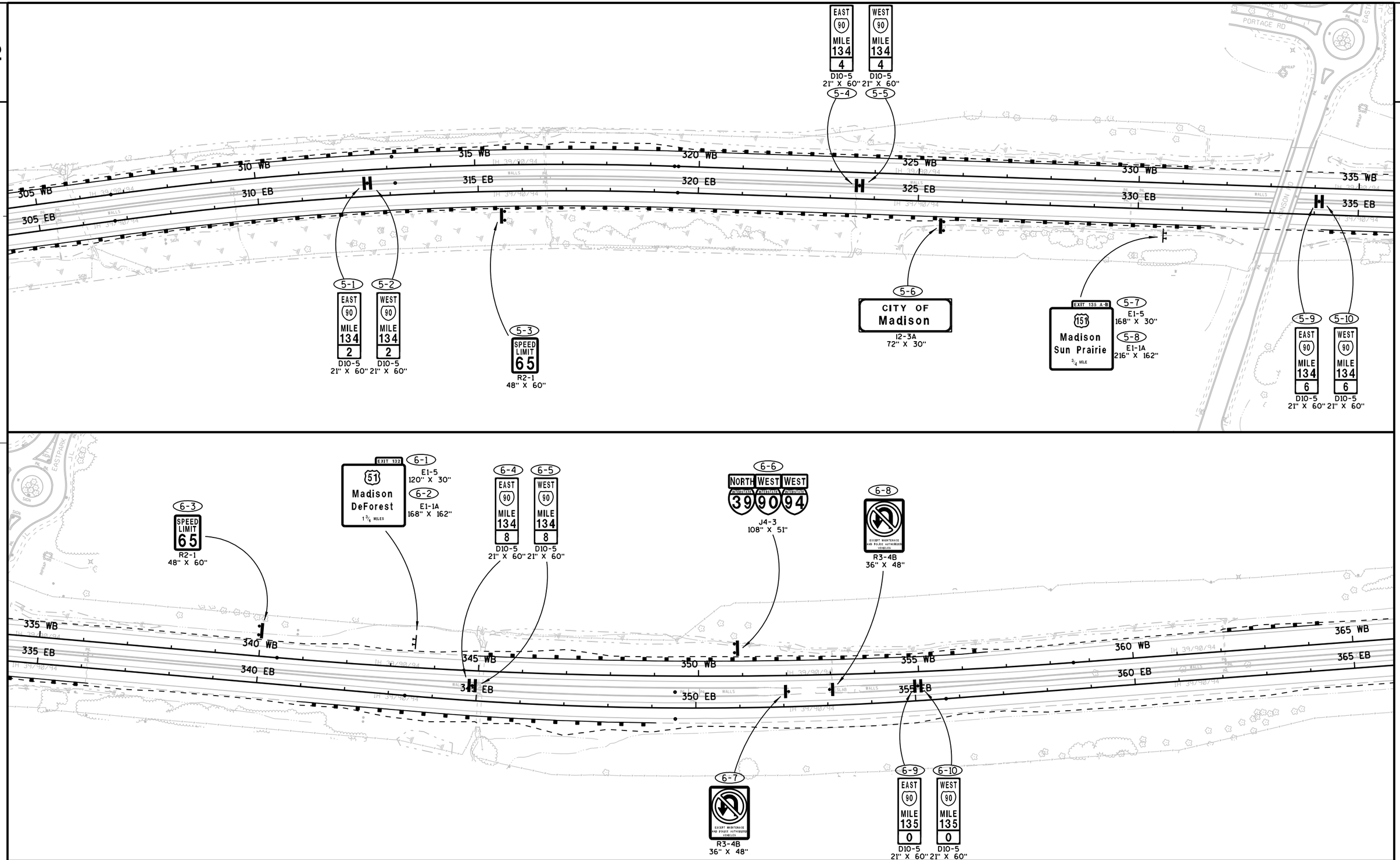

PROJECT NO:1010-00-72	HWY:IH 39	COUNTY:DANE	PERMANENT SIGNING	SHEET	E

FILE NAME : r:\Support\CADDS\Projects\d1_10100072\023208_ps.dgn PLOT DATE : 25-APR-2012 09:52 PLOT BY : DOTJ3J PLOT NAME : PLOT SCALE : 200.000000:1.000000

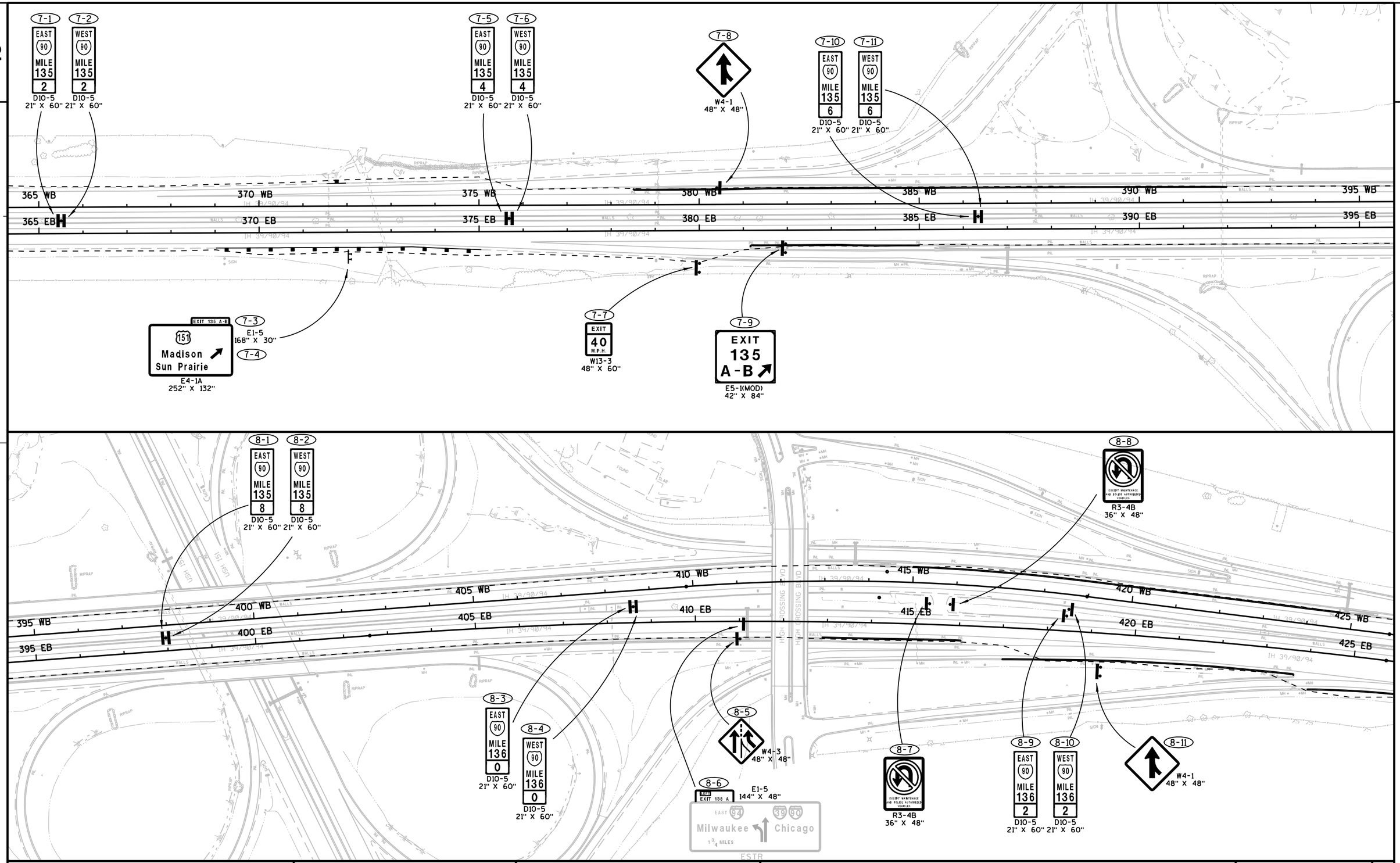

PROJECT NO:1010-00-72	HWY:IH 39	COUNTY:DANE	PERMANENT SIGNING	SHEET	E

FILE NAME : r:\Support\CADDS\Projects\d1_10100072\023209_ps.dgn PLOT DATE : 25-APR-2012 09:53 PLOT BY : DOTJ3J PLOT NAME : PLOT SCALE : 200.000000:1.000000

WISDOT/CADDS SHEET 42

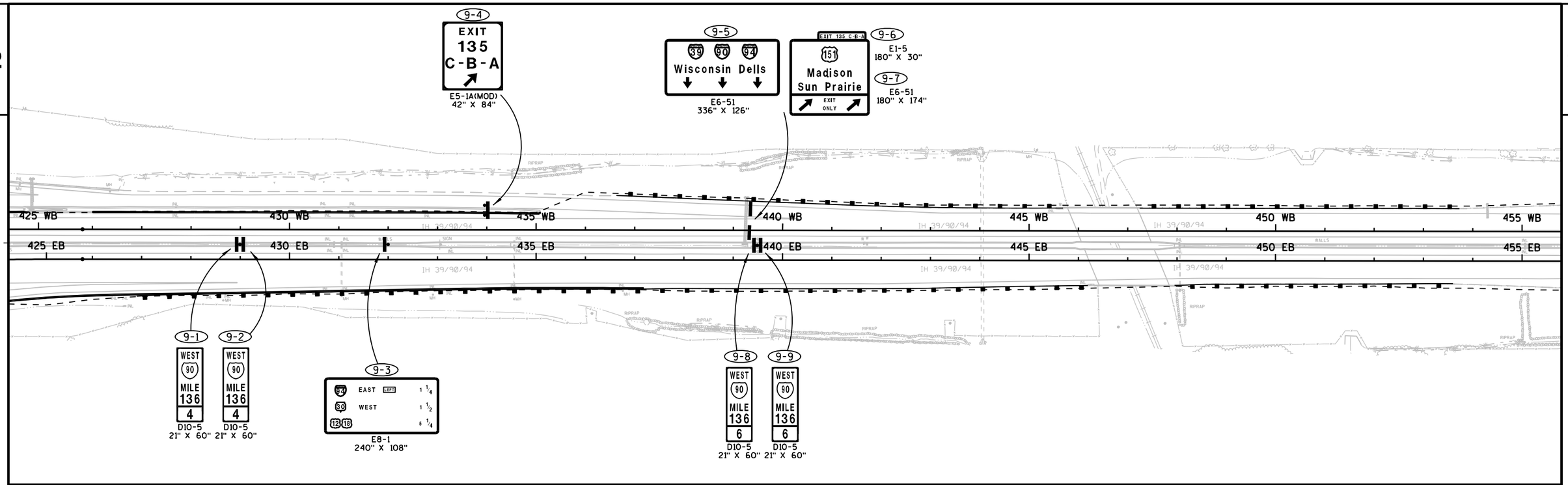
9-4
EXIT
135
C-B-A
E5-1A(MOD)
42" X 84"
9-5
39 90 94
Wisconsin Dells
E6-51
336" X 126"
EXIT 135 C-B-A
151
Madison
Sun Prairie
EXIT ONLY
9-6
E1-5
180" X 30"
9-7
E6-51
180" X 174"
425 WB
430 WB
435 WB
440 WB
445 WB
450 WB
455 WB
425 EB
430 EB
435 EB
440 EB
445 EB
450 EB
455 EB
IH 39/90/94
9-1
WEST
90
MILE
136
4
D10-5
21" X 60"
9-2
WEST
90
MILE
136
4
D10-5
21" X 60"
9-3
94 EAST LEFT 1 1/4
30 WEST 1 1/2
12 18 5 1/4
E8-1
240" X 108"
9-8
WEST
90
MILE
136
6
D10-5
21" X 60"
9-9
WEST
90
MILE
136
6
D10-5
21" X 60"

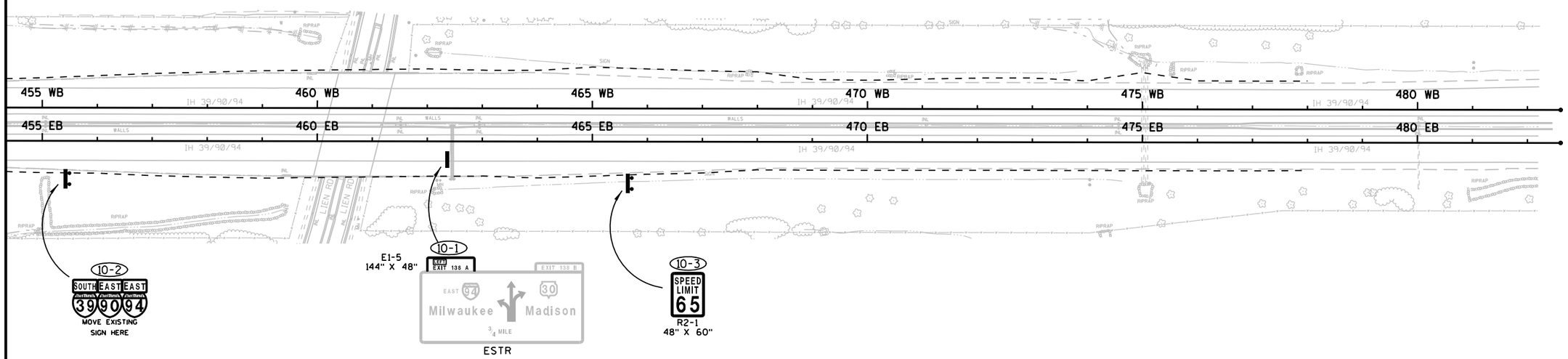
455 WB
460 WB
465 WB
470 WB
475 WB
480 WB
455 EB
460 EB
465 EB
470 EB
475 EB
480 EB
IH 39/90/94
LIEN RD
10-2
SOUTH EAST EAST
39 90 94
MOVE EXISTING
SIGN HERE
10-1
E1-5
144" X 48"
NEAR EXIT 138 A
EXIT 138 B
EAST 94
30
Milwaukee
Madison
3/4 MILE
ESTR
10-3
SPEED
LIMIT
65
R2-1
48" X 60"

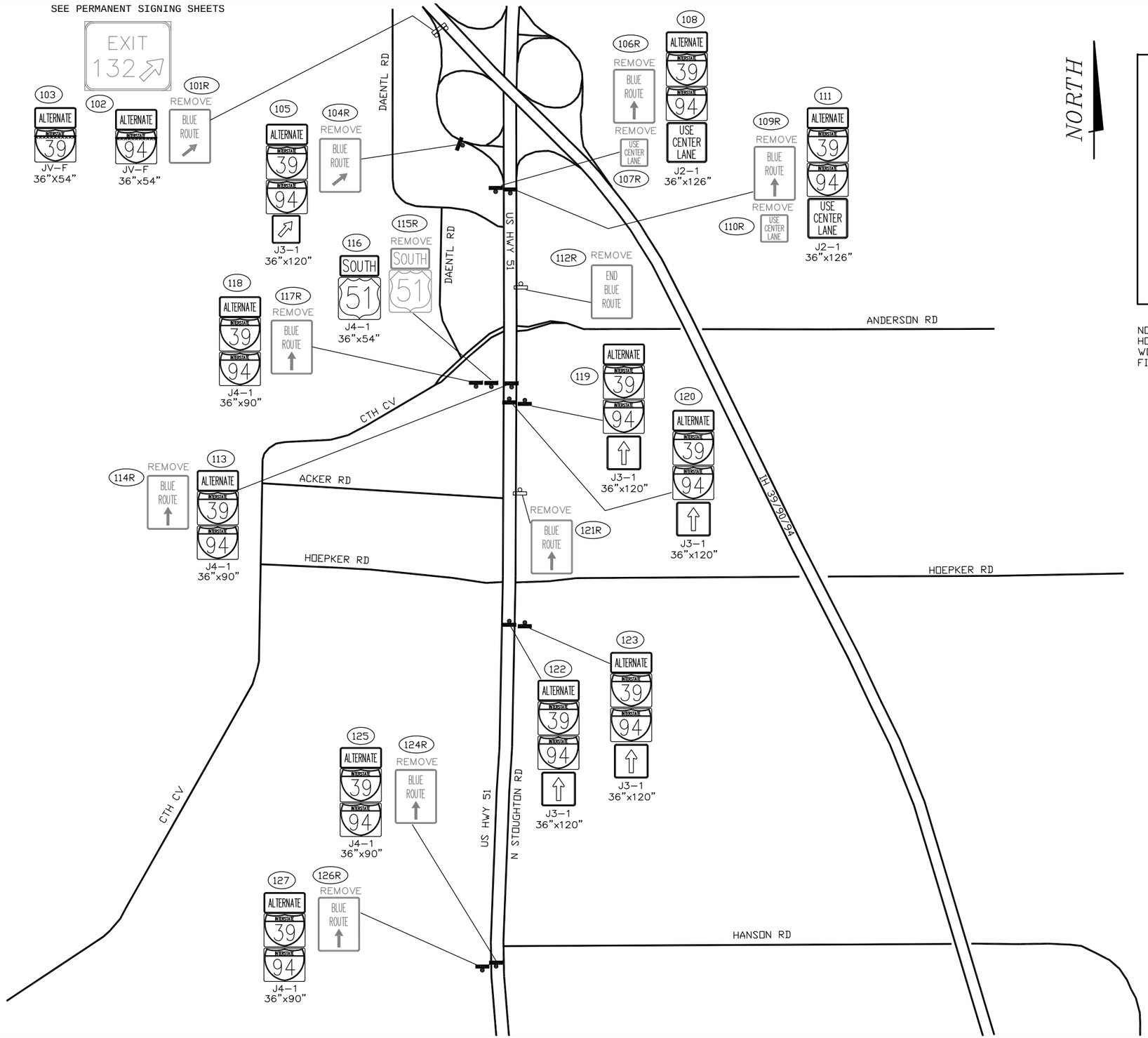

LEGEND

- USE CENTER LANE — EXISTING SIGN
- EXISTING SIGN SYMBOL
- EXISTING SIGN ON SINGLE POST
- EXISTING SIGN ON TWO POSTS
- EXISTING OVERHEAD SIGN CANTILIVER
- EXISTING OVERHEAD SIGN BRIDGE
- EXISTING STREET LIGHT
- USE CENTER LANE — PROPOSED SIGN
- PROPOSED SIGN SYMBOL
- PROPOSED SIGN ON SINGLE POST
- PROPOSED SIGN ON TWO POSTS

NOTE: CONTACT SW REGION TRAFFIC SECTION, JEFF HOLLOWAY, AT 608-246-3268 OR 608-516-6437, AT LEAST 5 WORKING DAYS PRIOR TO INSTALLING SIGNS TO CONFIRM EXACT FIELD LOCATIONS OF PERMANENT SIGNS.

PROJECT NO: 1010–00–72	HWY: IH 39	COUNTY: DANE	ALTERNATE ROUTE SIGNING	SHEET	E

FILE NAME: G:\1–ROAD PROJECTS\WisDOT Master Contracts\IH 90–94 1010–00–72\Cadd Signs\Signs.dwg PLOT DATE: Mar 23, 2012 PLOT BY: JimO PLOT SCALE: ROTATION: DWG–DESCRIPTION

LEGEND

- USE CENTER LANE — EXISTING SIGN
- EXISTING SIGN SYMBOL
- EXISTING SIGN ON SINGLE POST
- EXISTING SIGN ON TWO POSTS
- EXISTING OVERHEAD SIGN CANTILIVER
- EXISTING OVERHEAD SIGN BRIDGE
- EXISTING STREET LIGHT
- USE CENTER LANE — PROPOSED SIGN
- PROPOSED SIGN SYMBOL
- PROPOSED SIGN ON SINGLE POST
- PROPOSED SIGN ON TWO POSTS

NOTE: CONTACT SW REGION TRAFFIC SECTION, JEFF HOLLOWAY, AT 608-246-3268 OR 608-516-6437, AT LEAST 5 WORKING DAYS PRIOR TO INSTALLING SIGNS TO CONFIRM EXACT FIELD LOCATIONS OF PERMANENT SIGNS.

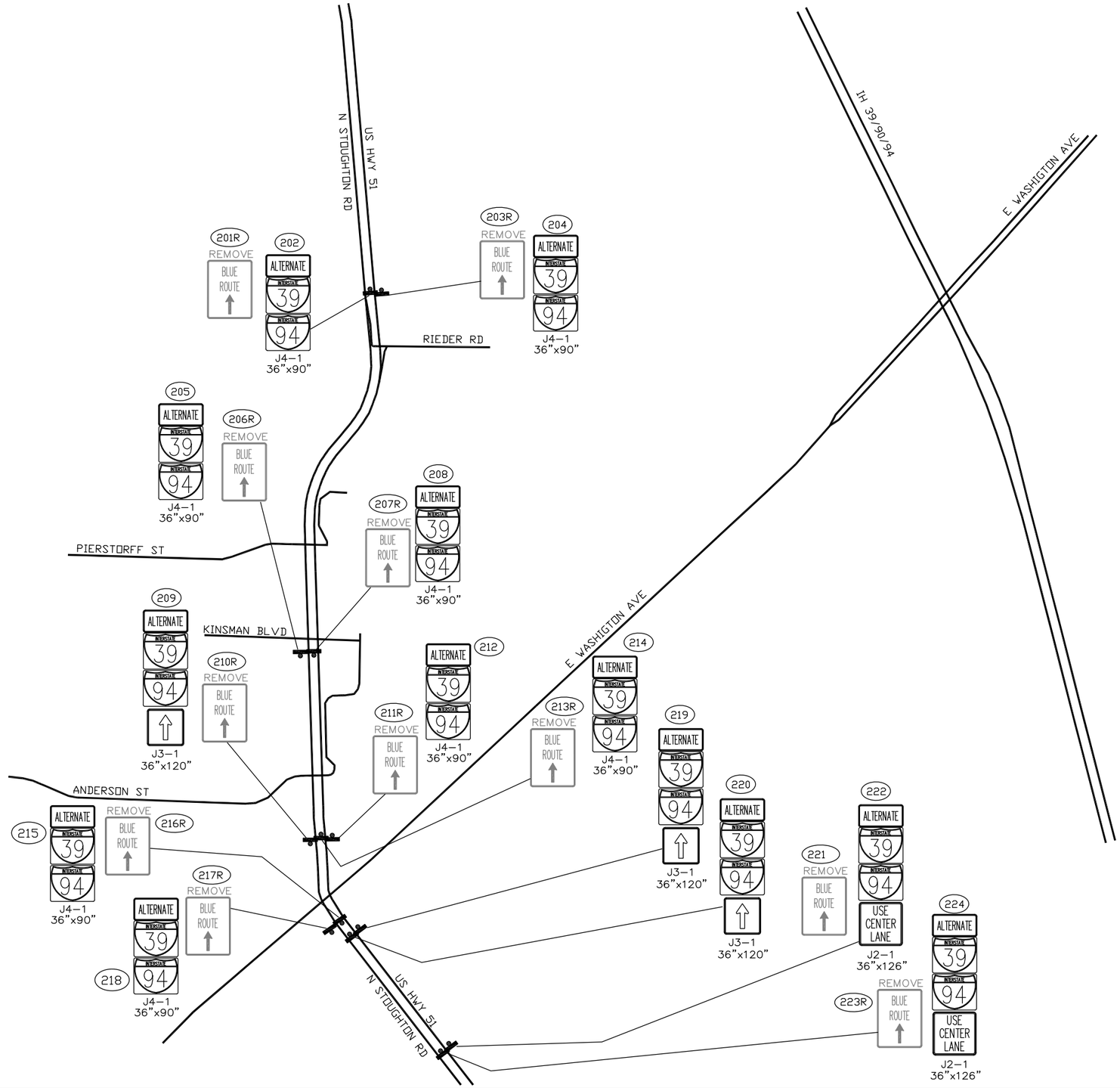

PROJECT NO: 1010-00-72	HWY: IH 39	COUNTY: DANE	ALTERNATE ROUTE SIGNING	SHEET 67	E

FILE NAME: G:\1-ROAD PROJECTS\WisDOT Master Contracts\IH 90-94 1010-00-72\Cadd Signs\Signs.dwg PLOT DATE: Mar 23, 2012 PLOT BY: JimO PLOT SCALE: ROTATION:

2

NOTE: CONTACT SW REGION TRAFFIC SECTION, JEFF HOLLOWAY, AT 608-246-3268 OR 608-516-6437, AT LEAST 5 WORKING DAYS PRIOR TO INSTALLING SIGNS TO CONFIRM EXACT FIELD LOCATIONS OF PERMANENT SIGNS.

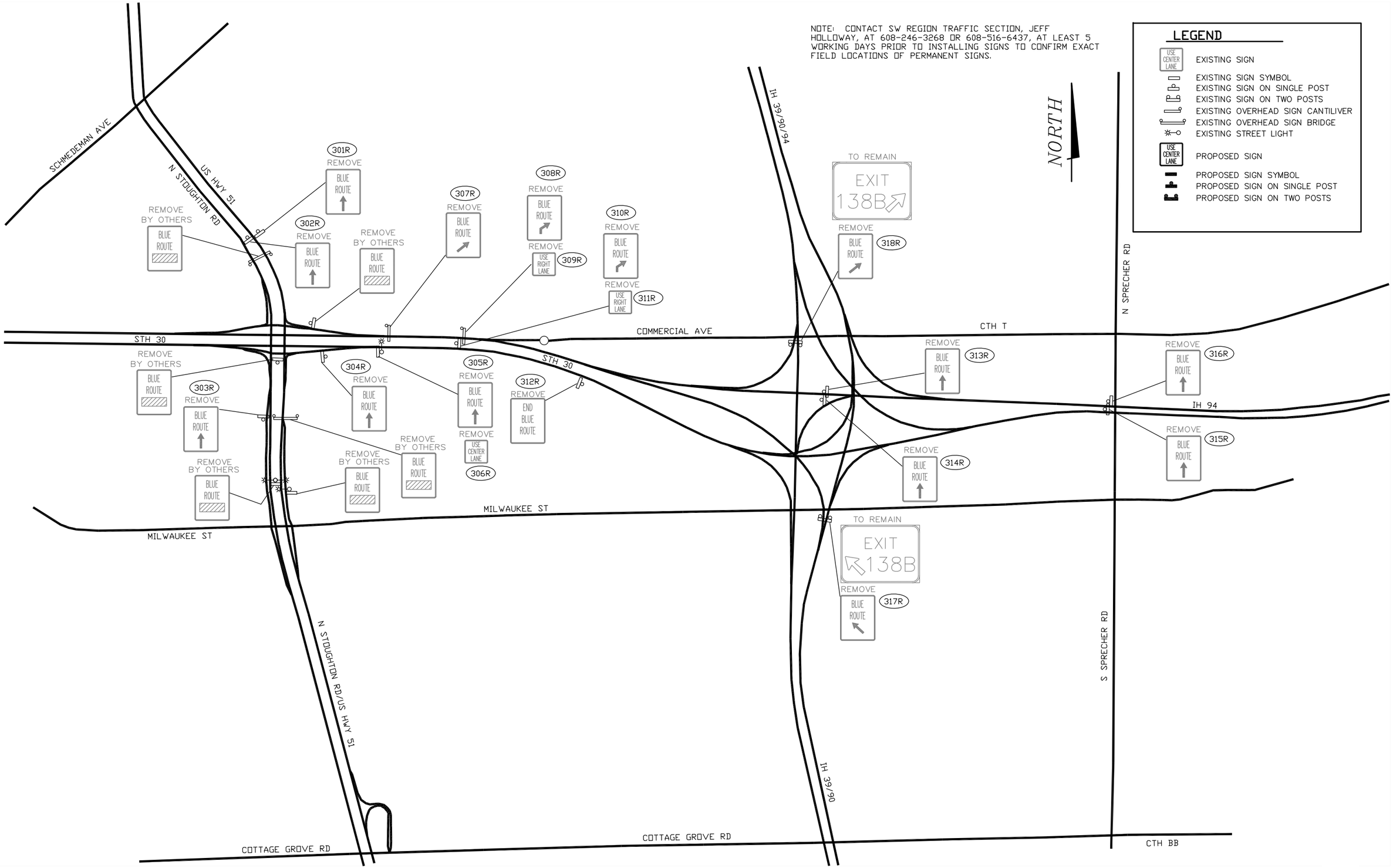

2

PROJECT NO: 1010-00-72	HWY: IH 39	COUNTY: DANE	ALTERNATE ROUTE SIGNING	SHEET 68	E

FILE NAME: G:\1-ROAD PROJECTS\WisDOT Master Contracts\IH 90-94 1010-00-72\Cadd Signs\Signs.dwg PLOT DATE: Mar 23, 2012 PLOT BY: JimO PLOT SCALE: ROTATION:

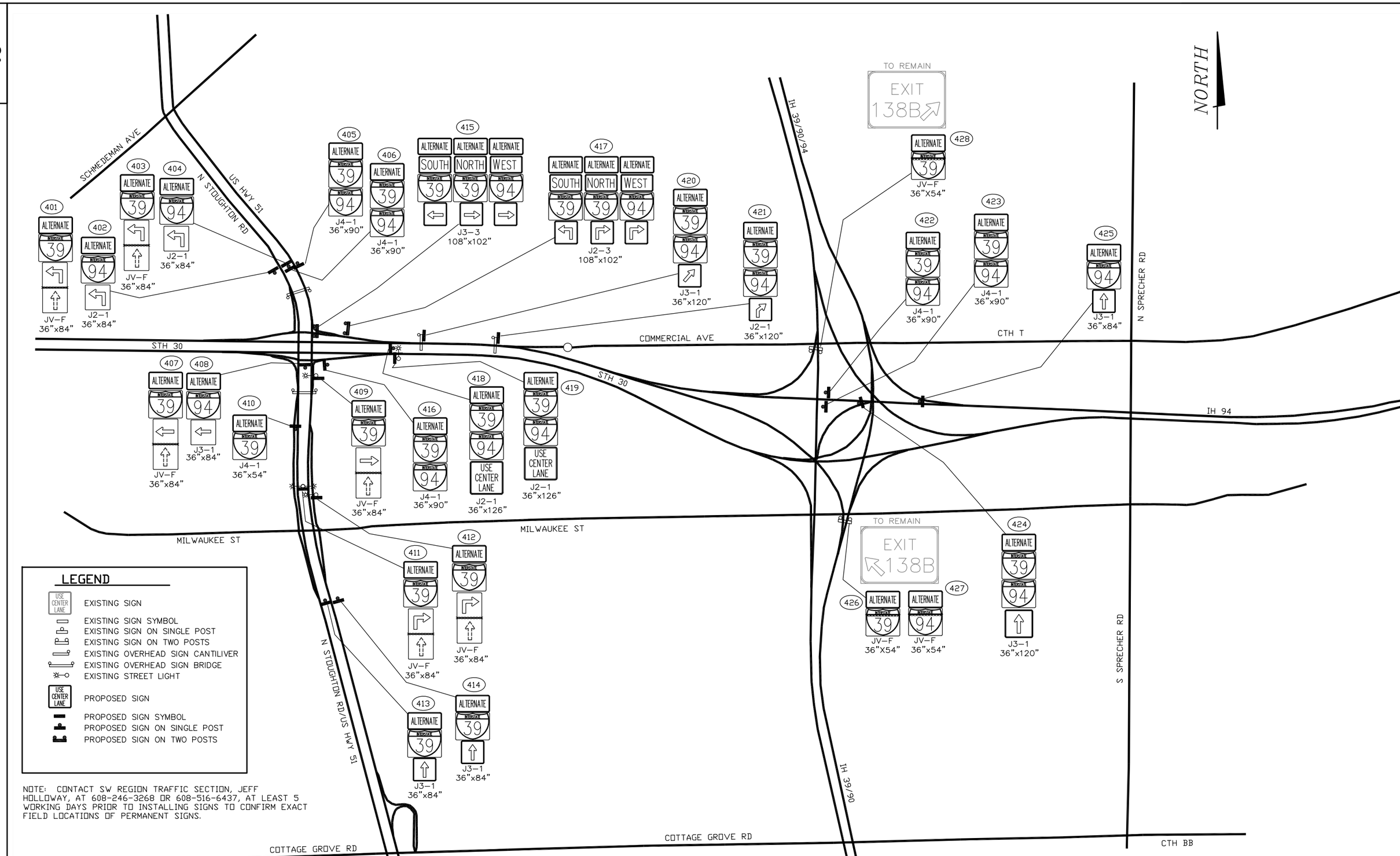

NOTE: CONTACT SW REGION TRAFFIC SECTION, JEFF HOLLOWAY, AT 608-246-3268 OR 608-516-6437, AT LEAST 5 WORKING DAYS PRIOR TO INSTALLING SIGNS TO CONFIRM EXACT FIELD LOCATIONS OF PERMANENT SIGNS.

PROJECT NO: 1010-00-72	HWY: IH 39	COUNTY: DANE	ALTERNATE ROUTE SIGNING	SHEET	E

FILE NAME: G:\1-ROAD PROJECTS\WisDOT Master Contracts\IH 90-94 1010-00-72\Cadd Signs\Signs.dwg PLOT DATE: Mar 23, 2012 PLOT BY: JimO PLOT SCALE: ROTATION:

NORTH

LEGEND

- USE CENTER LANE — EXISTING SIGN
- EXISTING SIGN SYMBOL
- EXISTING SIGN ON SINGLE POST
- EXISTING SIGN ON TWO POSTS
- EXISTING OVERHEAD SIGN CANTILIVER
- EXISTING OVERHEAD SIGN BRIDGE
- EXISTING STREET LIGHT
- USE CENTER LANE — PROPOSED SIGN
- PROPOSED SIGN SYMBOL
- PROPOSED SIGN ON SINGLE POST
- PROPOSED SIGN ON TWO POSTS

NOTE: CONTACT SW REGION TRAFFIC SECTION, JEFF HOLLOWAY, AT 608-246-3268 OR 608-516-6437, AT LEAST 5 WORKING DAYS PRIOR TO INSTALLING SIGNS TO CONFIRM EXACT FIELD LOCATIONS OF PERMANENT SIGNS.

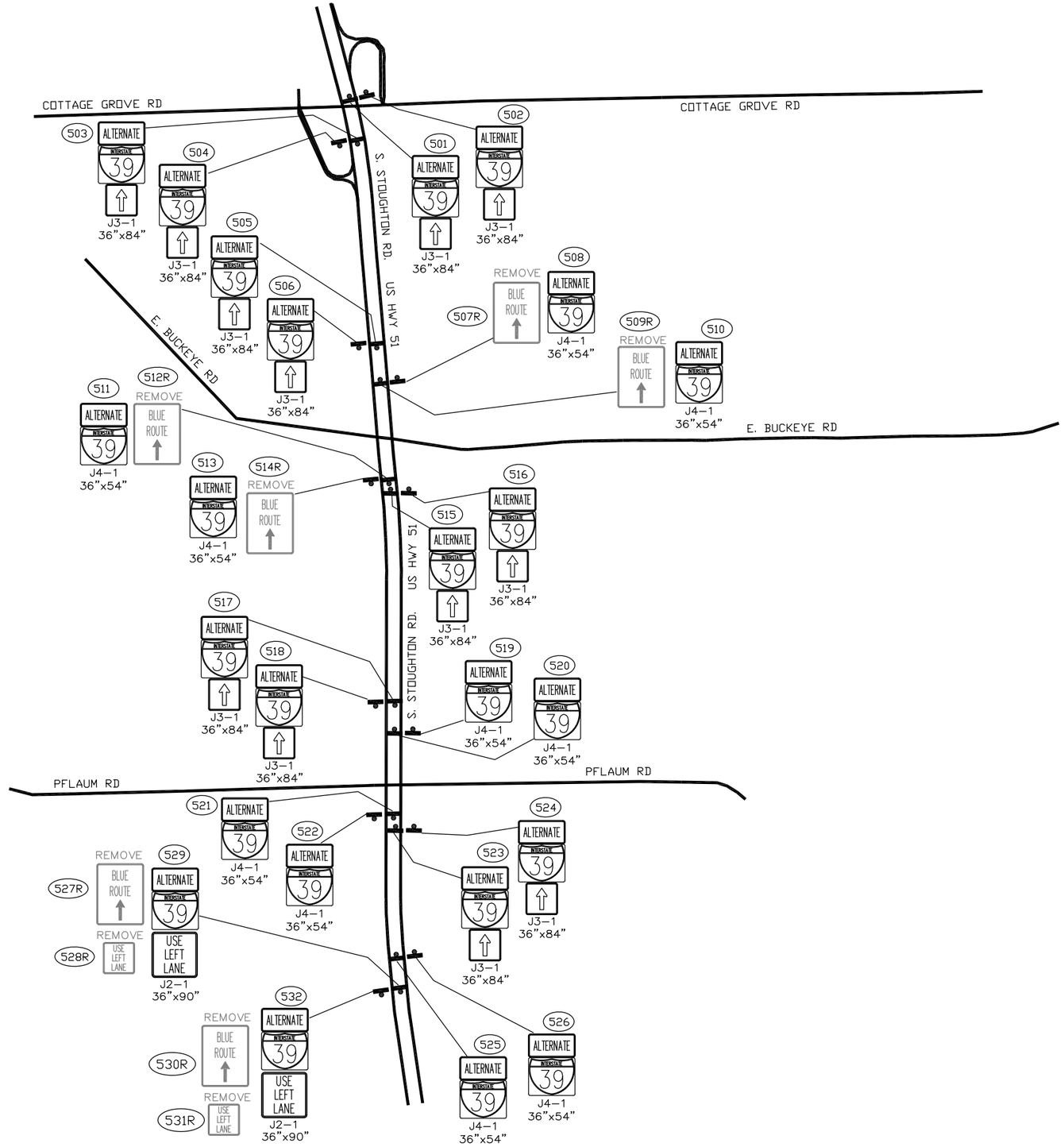

PROJECT NO: 1010-00-72	HWY: IH 39	COUNTY: DANE	ALTERNATE ROUTE SIGNING	SHEET 70	E

FILE NAME: G:\1-ROAD PROJECTS\WisDOT Master Contracts\IH 90-94 1010-00-72\Cadd Signs\Signs.dwg PLOT DATE: Mar 23, 2012 PLOT BY: JimO PLOT SCALE: ROTATION:

LEGEND

- EXISTING SIGN
- EXISTING SIGN SYMBOL
- EXISTING SIGN ON SINGLE POST
- EXISTING SIGN ON TWO POSTS
- EXISTING OVERHEAD SIGN CANTILIVER
- EXISTING OVERHEAD SIGN BRIDGE
- EXISTING STREET LIGHT
- PROPOSED SIGN
- PROPOSED SIGN SYMBOL
- PROPOSED SIGN ON SINGLE POST
- PROPOSED SIGN ON TWO POSTS

NOTE: CONTACT SW REGION TRAFFIC SECTION, JEFF HOLLOWAY, AT 608-246-3268 OR 608-516-6437, AT LEAST 5 WORKING DAYS PRIOR TO INSTALLING SIGNS TO CONFIRM EXACT FIELD LOCATIONS OF PERMANENT SIGNS.

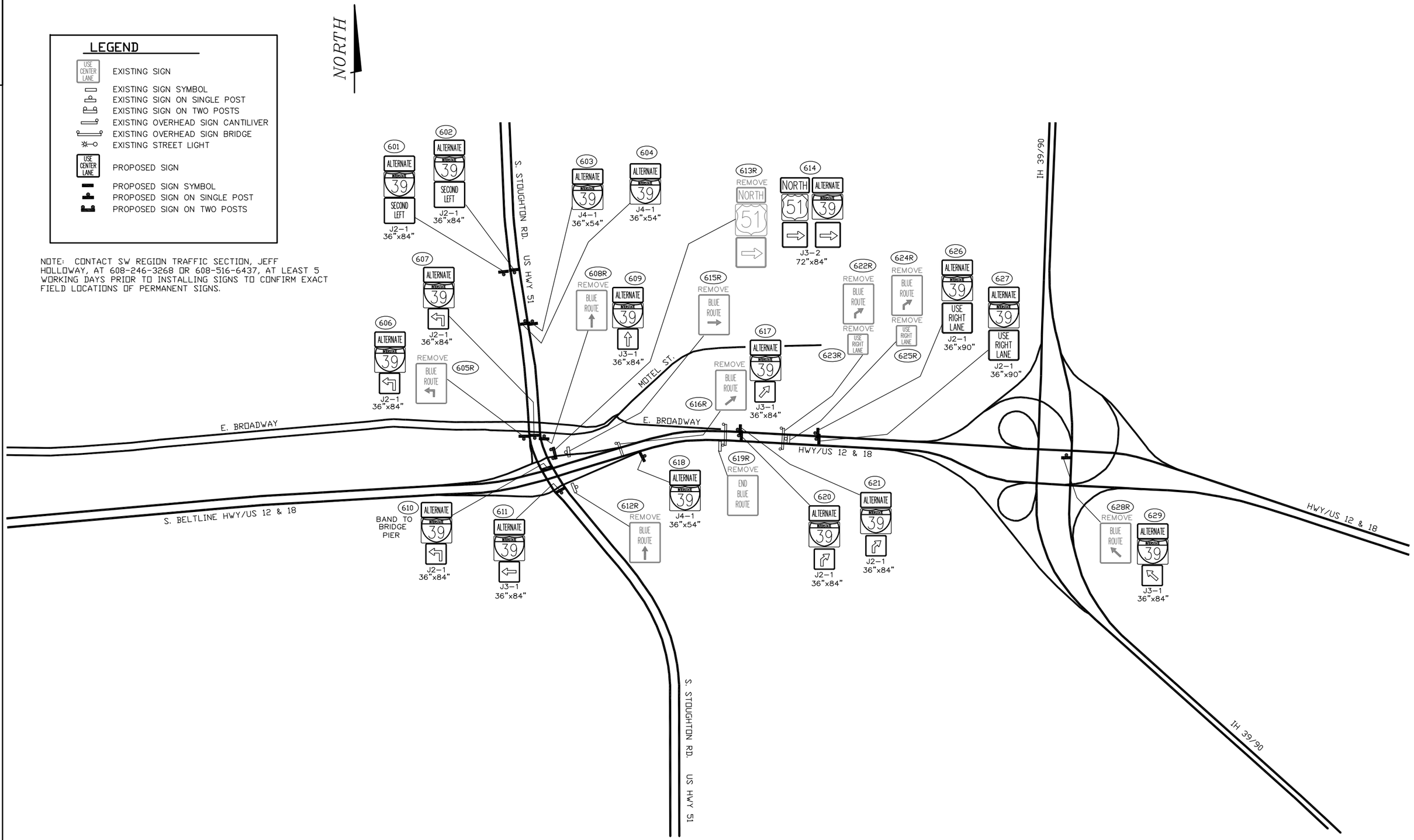

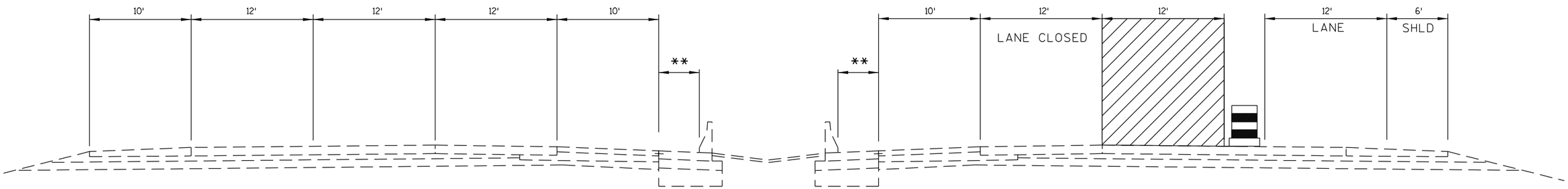

** 2' MIN. 4' NOR.

WORK ZONE

TRAFFIC CONTROL - NORTH OF USH 151 INTERCHANGE

STAGE 1A, 2C, 3C

PROJECT NO:1010-00-72	HWY:IH 39	COUNTY:DANE	CONSTRUCTION STAGING	SHEET	E

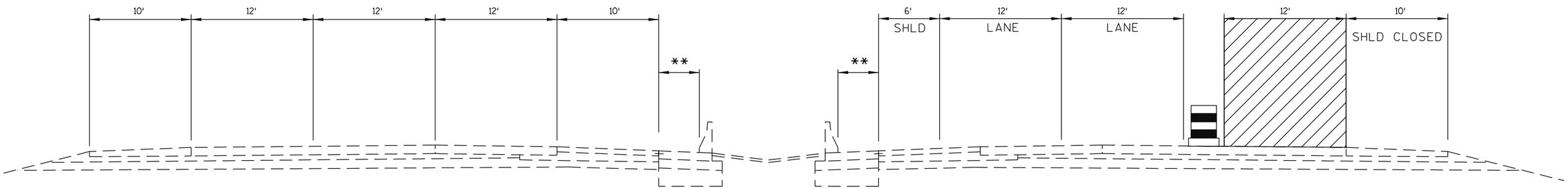

** 2' MIN. 4' NOR.

WORK ZONE

TRAFFIC CONTROL - NORTH OF USH 151 INTERCHANGE

STAGE 1B, 2E, 3E

PROJECT NO:1010-00-72	HWY:IH 39	COUNTY:DANE	CONSTRUCTION STAGING	SHEET	E

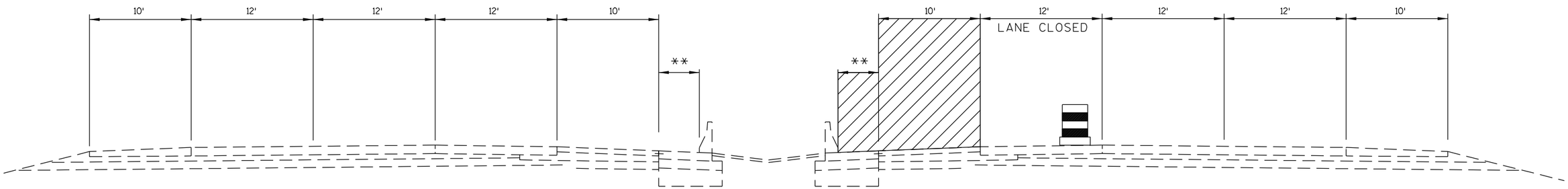

** 2' MIN. 4' NOR.

WORK ZONE

TRAFFIC CONTROL - NORTH OF USH 151 INTERCHANGE

STAGE 2A, 3A

PROJECT NO:1010-00-72	HWY:IH 39	COUNTY:DANE	CONSTRUCTION STAGING	SHEET	E

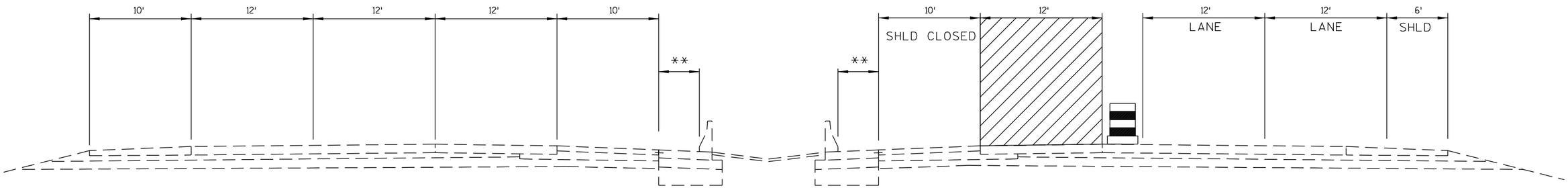

** 2' MIN. 4' NOR.

WORK ZONE

TRAFFIC CONTROL - NORTH OF USH 151 INTERCHANGE

STAGE 2B, 3B

PROJECT NO:1010-00-72	HWY:IH 39	COUNTY:DANE	CONSTRUCTION STAGING	SHEET	E

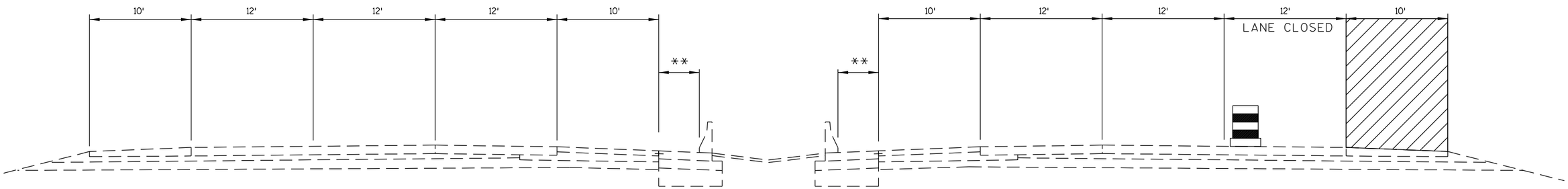

** 2' MIN. 4' NOR.

WORK ZONE

TRAFFIC CONTROL - NORTH OF USH 151 INTERCHANGE

STAGE 2F, 3F, 4A

PROJECT NO:1010-00-72	HWY:IH 39	COUNTY:DANE	CONSTRUCTION STAGING	SHEET	E

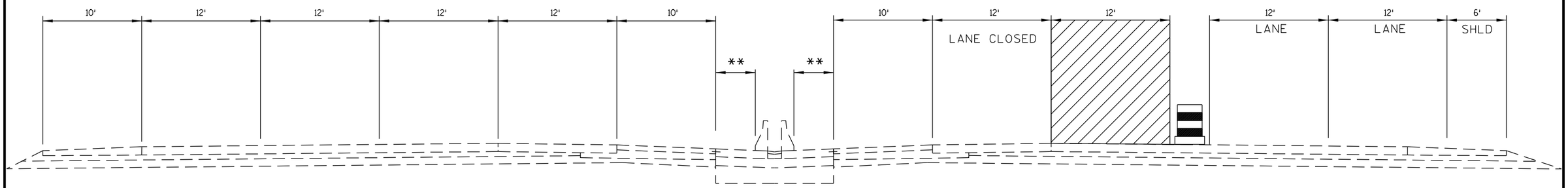

** 2' MIN. 4' NOR.

WORK ZONE

TRAFFIC CONTROL - SOUTH OF USH 151 INTERCHANGE

STAGE 1A, 2C, 3C

PROJECT NO:1010-00-72	HWY:IH 39	COUNTY:DANE	CONSTRUCTION STAGING	SHEET	E

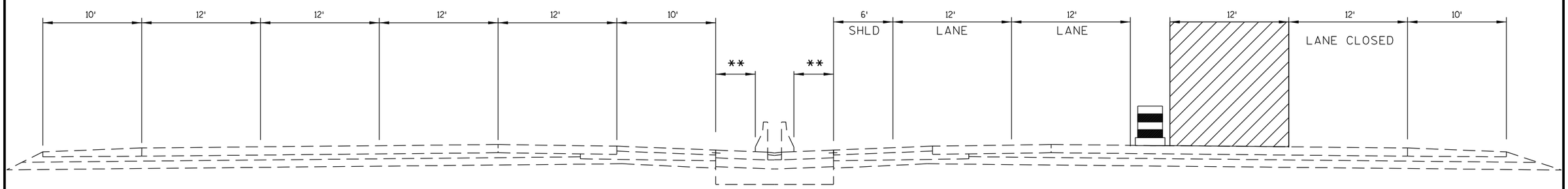

** 2' MIN. 4' NOR.

WORK ZONE

TRAFFIC CONTROL - SOUTH OF USH 151 INTERCHANGE

STAGE 1B, 2D, 3D

PROJECT NO:1010-00-72	HWY:IH 39	COUNTY:DANE	CONSTRUCTION STAGING	SHEET	E

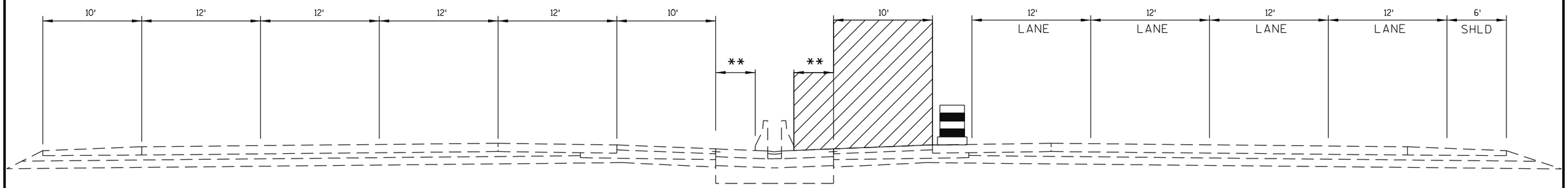

** 2' MIN. 4' NOR.

WORK ZONE

TRAFFIC CONTROL - SOUTH OF USH 151 INTERCHANGE

STAGE 2A, 3A

PROJECT NO:1010-00-72	HWY:IH 39	COUNTY:DANE	CONSTRUCTION STAGING	SHEET	E

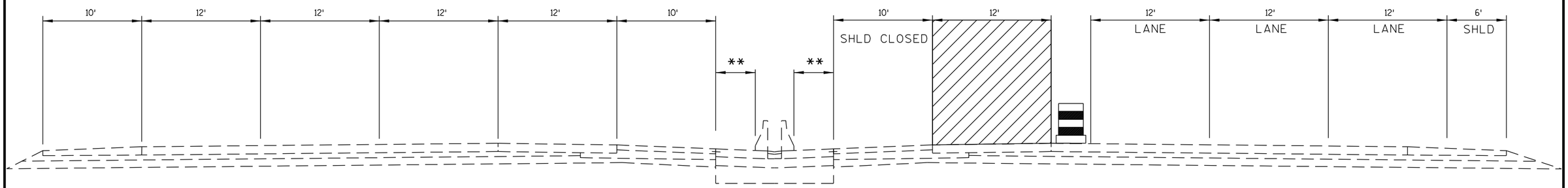

** 2' MIN. 4' NOR.

WORK ZONE

TRAFFIC CONTROL - SOUTH OF USH 151 INTERCHANGE

STAGE 2B, 3B

PROJECT NO:1010-00-72	HWY:IH 39	COUNTY:DANE	CONSTRUCTION STAGING	SHEET	E

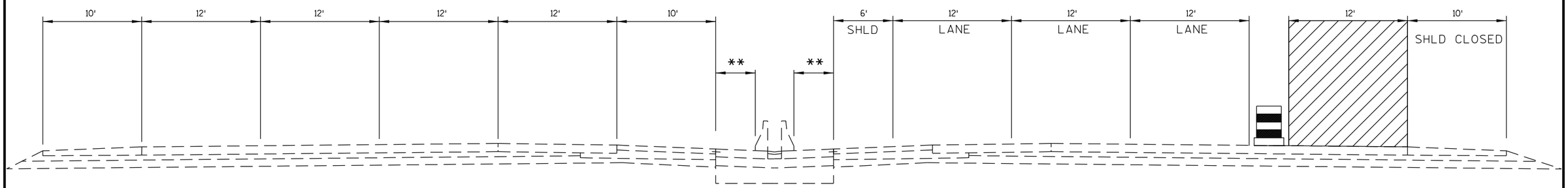

** 2' MIN. 4' NOR.

WORK ZONE

TRAFFIC CONTROL - SOUTH OF USH 151 INTERCHANGE

STAGE 2E, 3E

PROJECT NO:1010-00-72	HWY:IH 39	COUNTY:DANE	CONSTRUCTION STAGING	SHEET	E

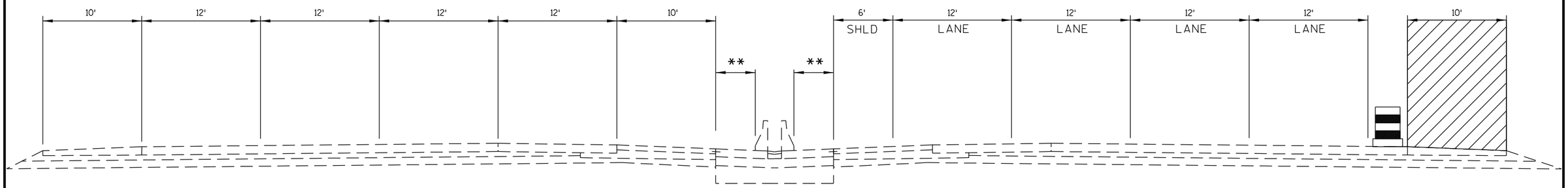

** 2' MIN. 4' NOR.

WORK ZONE

TRAFFIC CONTROL - SOUTH OF USH 151 INTERCHANGE

STAGE 2F, 3F

NOTES :

SEE S.D.D TRAFFIC CONTROL LANE CLOSURE, SPEEDS GREATER THAN 40 M.P.H. AND S.D.D. TRAFFIC CONTROL, TWO LANE CLOSURE ON FREEWAY OR EXPRESSWAY, SHORT-TERM (LESS THAN 24 HOURS) FOR ADDITIONAL NOTES, DETAILS, AND LEGEND

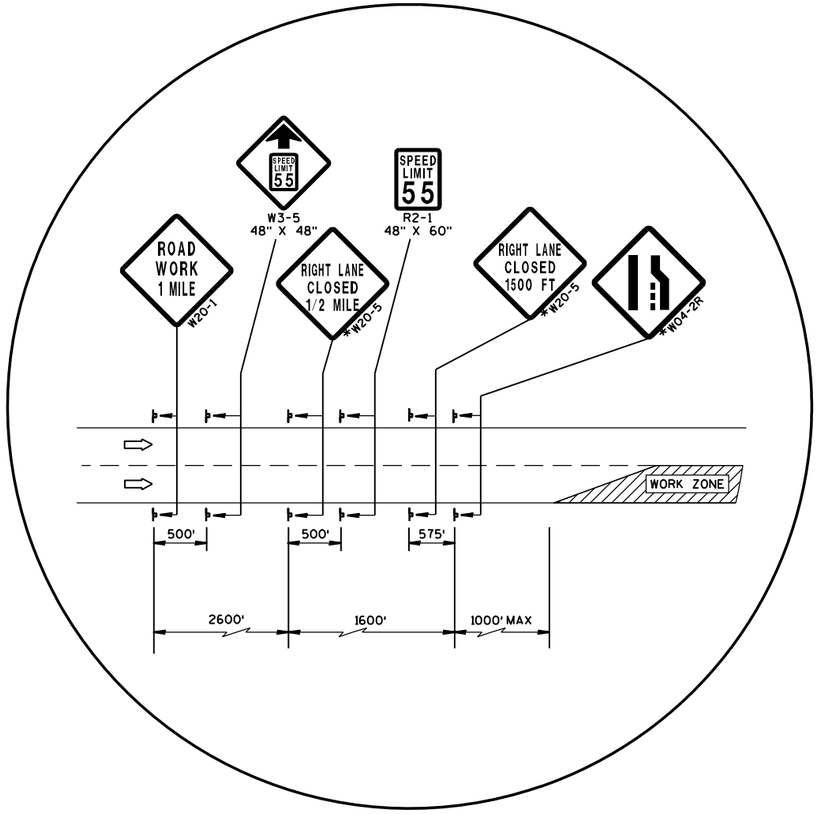

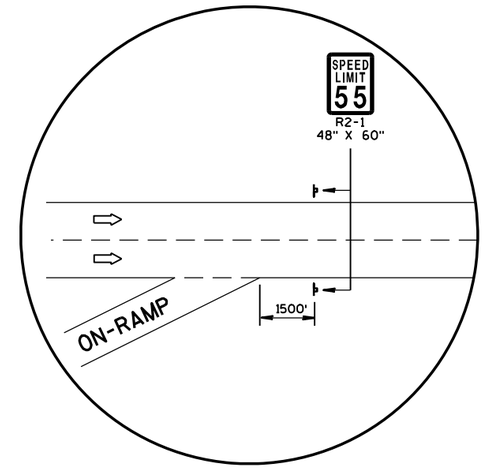

*SIGNS SHOWN FOR RIGHT LANE CLOSURE
FOR LEFT LANE CLOSURE USE THE SIGNS BELOW

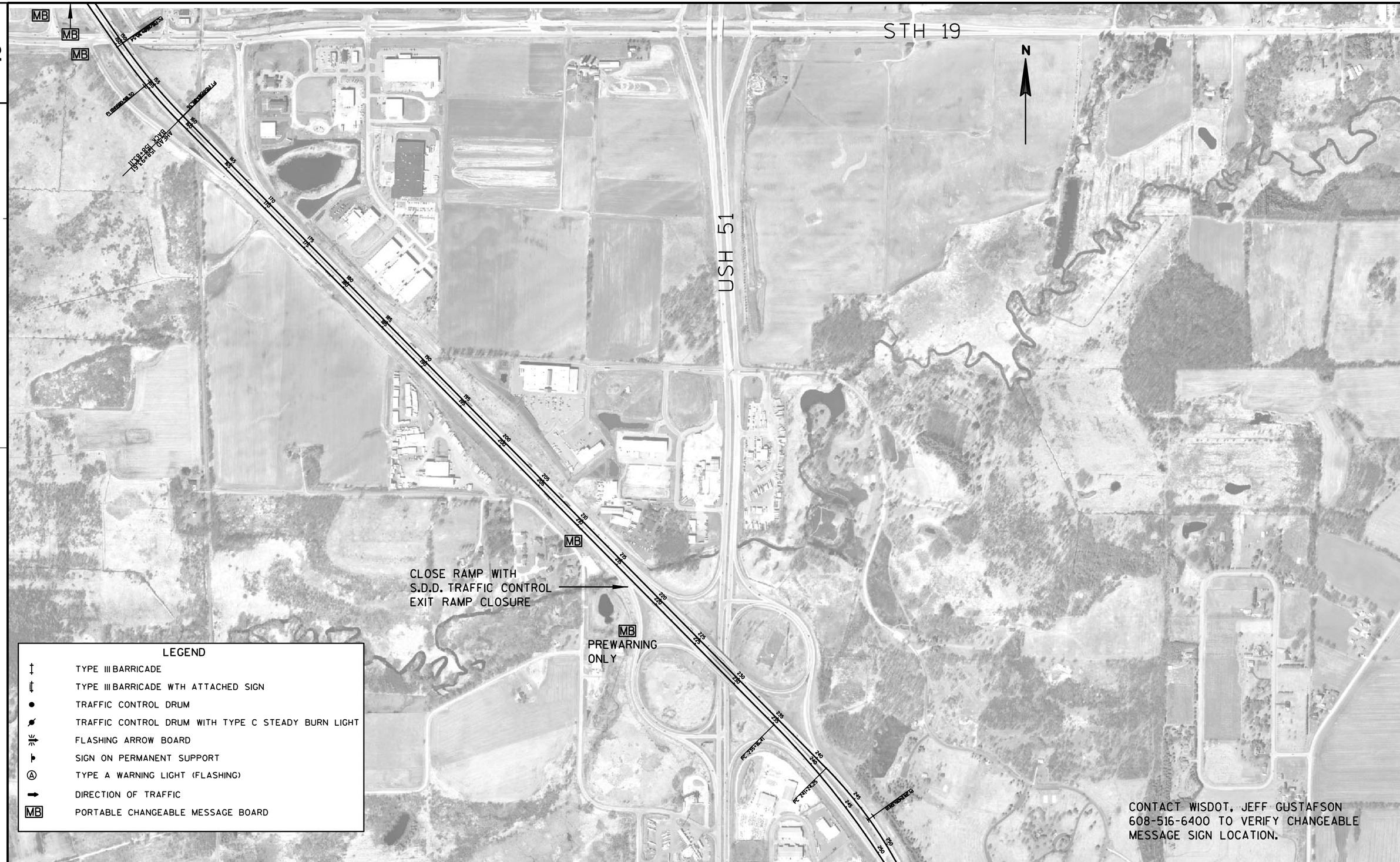

PROJECT NO:1010-00-72	HWY:IH 39	COUNTY:DANE	TRAFFIC CONTROL - SB IH 39 TO USH 51 EXIT RAMP CLOSURE	SHEET	E

FILE NAME : r:\Support\CADDS\Projects\d1_10100072\025001_tc.dgn PLOT DATE : 25-APR-2012 09:53 PLOT BY : DOTJ3J PLOT NAME : PLOT SCALE : 800.000000:1.000000 WISDOT/CADDS SHEET 42

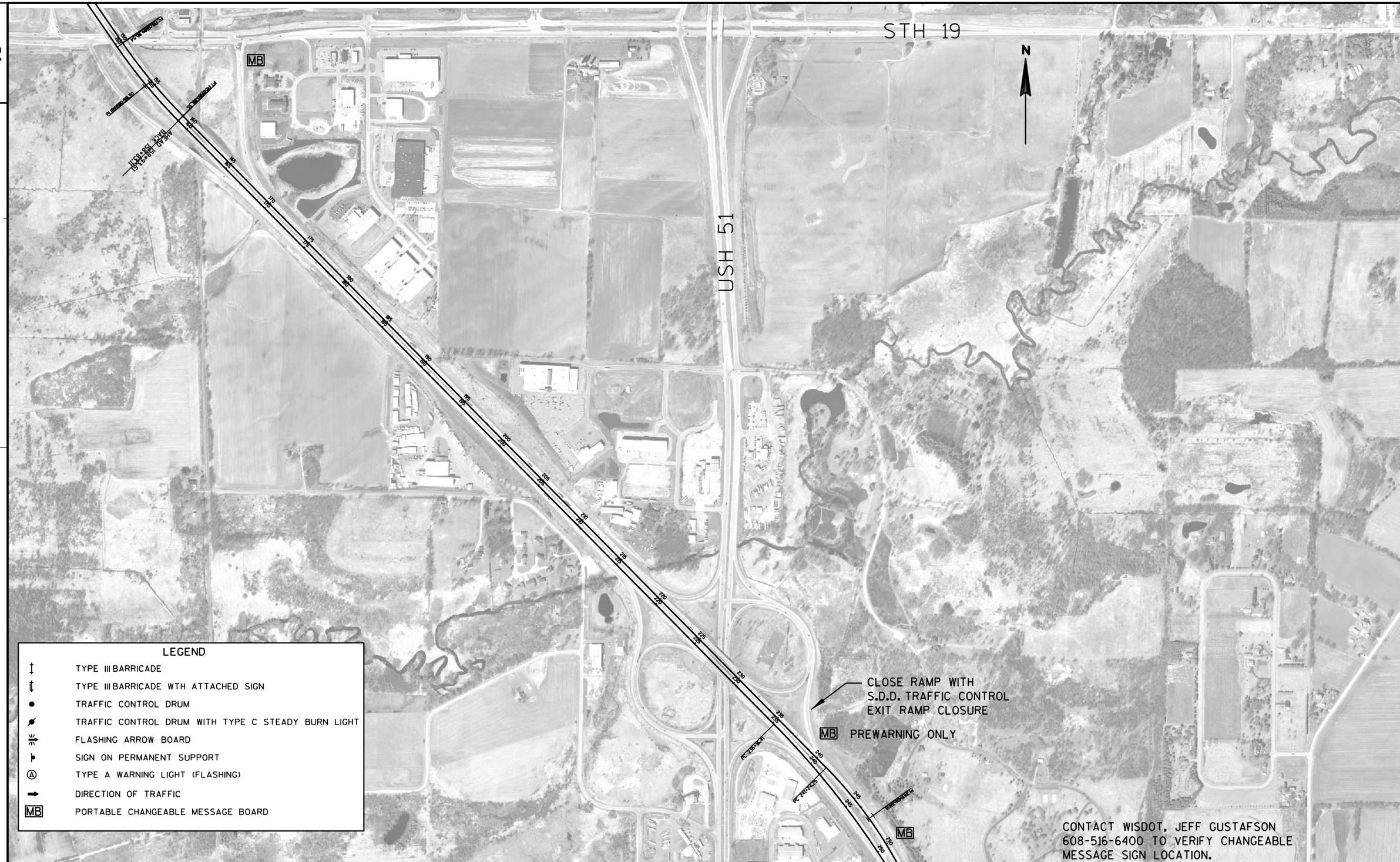

PROJECT NO:1010-00-72	HWY:IH 39	COUNTY:DANE	TRAFFIC CONTROL - NB IH 39 TO USH 51 EXIT RAMP CLOSURE	SHEET	E

FILE NAME : r:\Support\CADDS\Projects\d1_10100072\025002_tc.dgn PLOT DATE : 25-APR-2012 09:53 PLOT BY : DOTJ3J PLOT NAME : PLOT SCALE : 800.000000:1.000000 WISDOT/CADDS SHEET 42

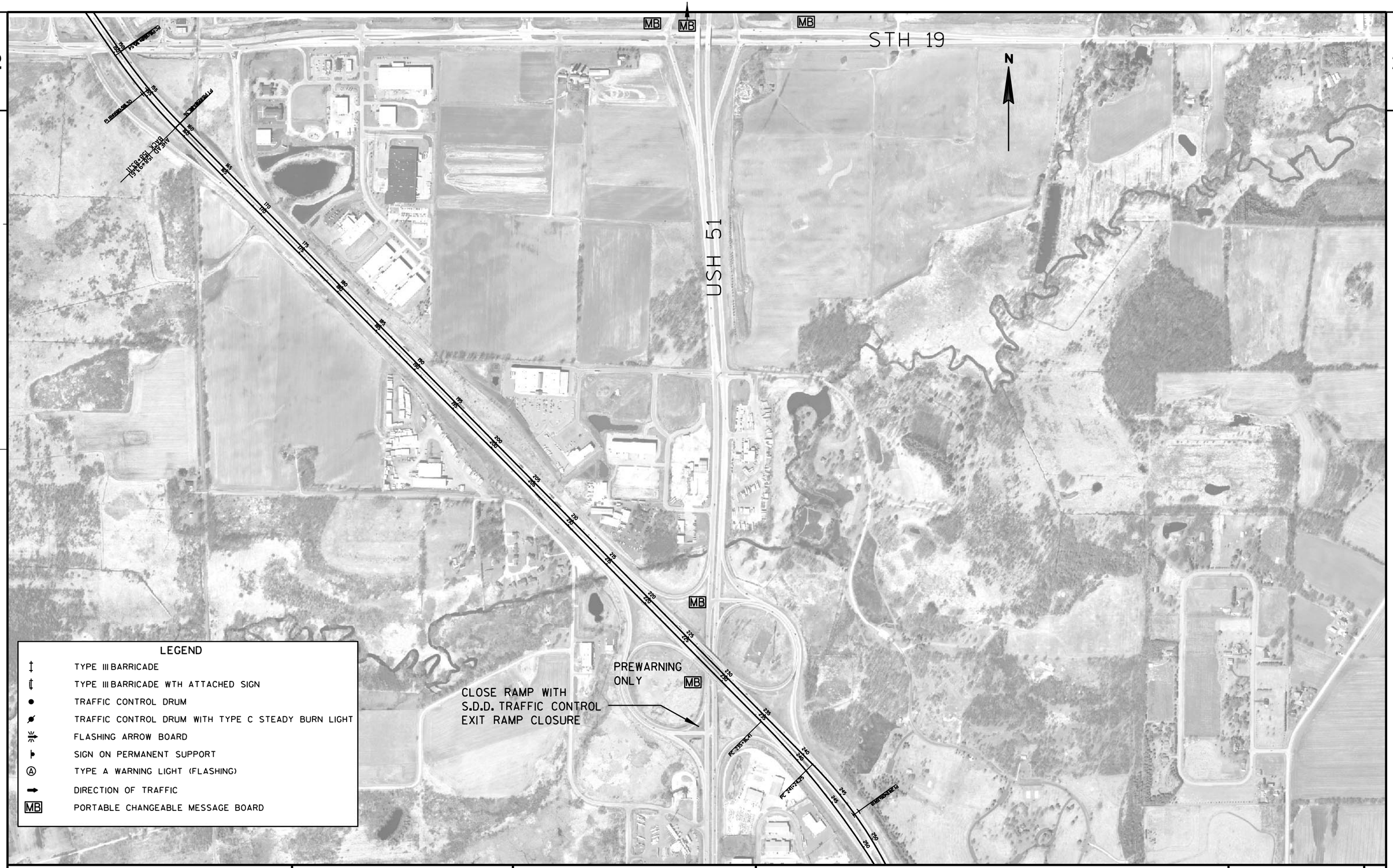

PROJECT NO:1010-00-72	HWY:IH 39	COUNTY:DANE	TRAFFIC CONTROL - SB USH 51 TO SB IH 39 EXIT RAMP CLOSURE	SHEET	E

FILE NAME : r:\Support\CADDS\Projects\d1_10100072\025003_tc.dgn PLOT DATE : 25-APR-2012 09:53 PLOT BY : DOTJ3J PLOT NAME : PLOT SCALE : 800.000000:1.000000 WISDOT/CADDS SHEET 42

2

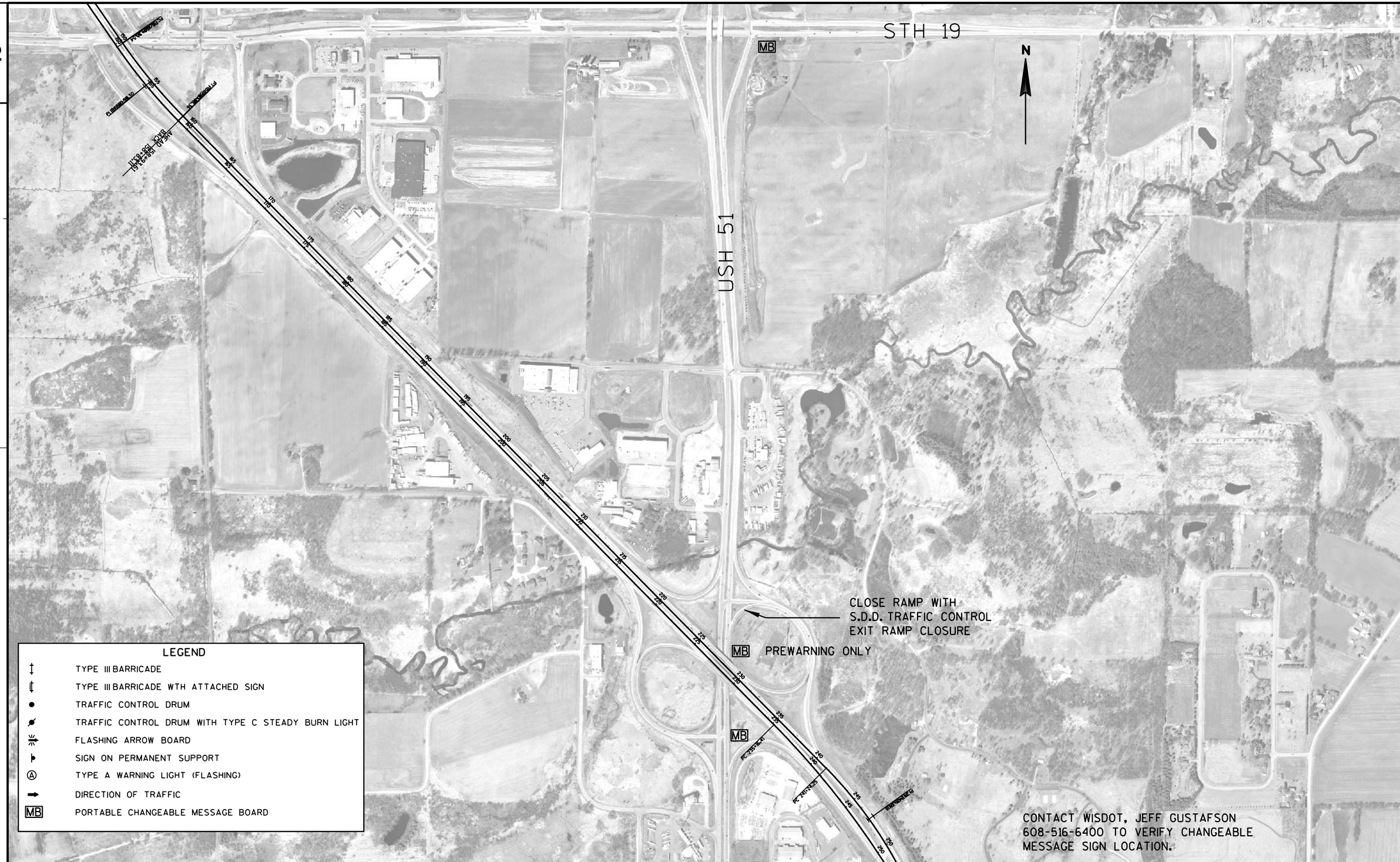

2

PROJECT NO:1010-00-72	HWY:IH 39	COUNTY:DANE	TRAFFIC CONTROL - NB USH 51 TO NB IH 39 EXIT RAMP CLOSURE	SHEET	E

FILE NAME : r:\Support\CADDS\Projects\d1_10100072\025004_tc.dgn PLOT DATE : 25-APR-2012 09:54 PLOT BY : DOTJ3J PLOT NAME : PLOT SCALE : 800.000000:1.000000 WISDOT/CADDS SHEET 42

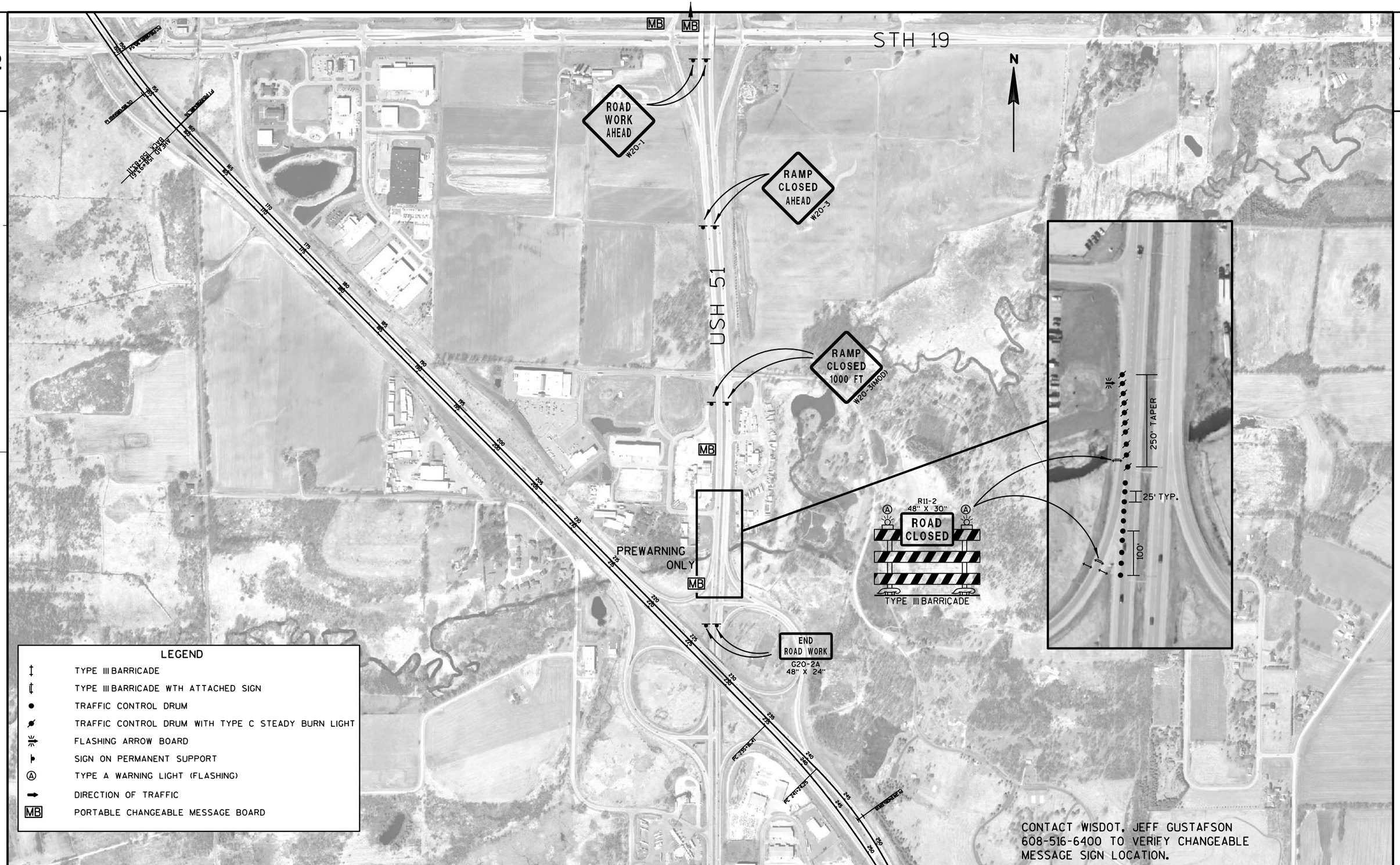

PROJECT NO:1010-00-72	HWY:IH 39	COUNTY:DANE	TRAFFIC CONTROL - SB USH 51 TO NB IH 39 EXIT RAMP CLOSURE	SHEET	E

FILE NAME : r:\Support\CADDS\Projects\d1_10100072\025005_tc.dgn PLOT DATE : 25-APR-2012 09:54 PLOT BY : DOTJ3J PLOT NAME : PLOT SCALE : 800.000000:1.000000 WISDOT/CADDS SHEET 42

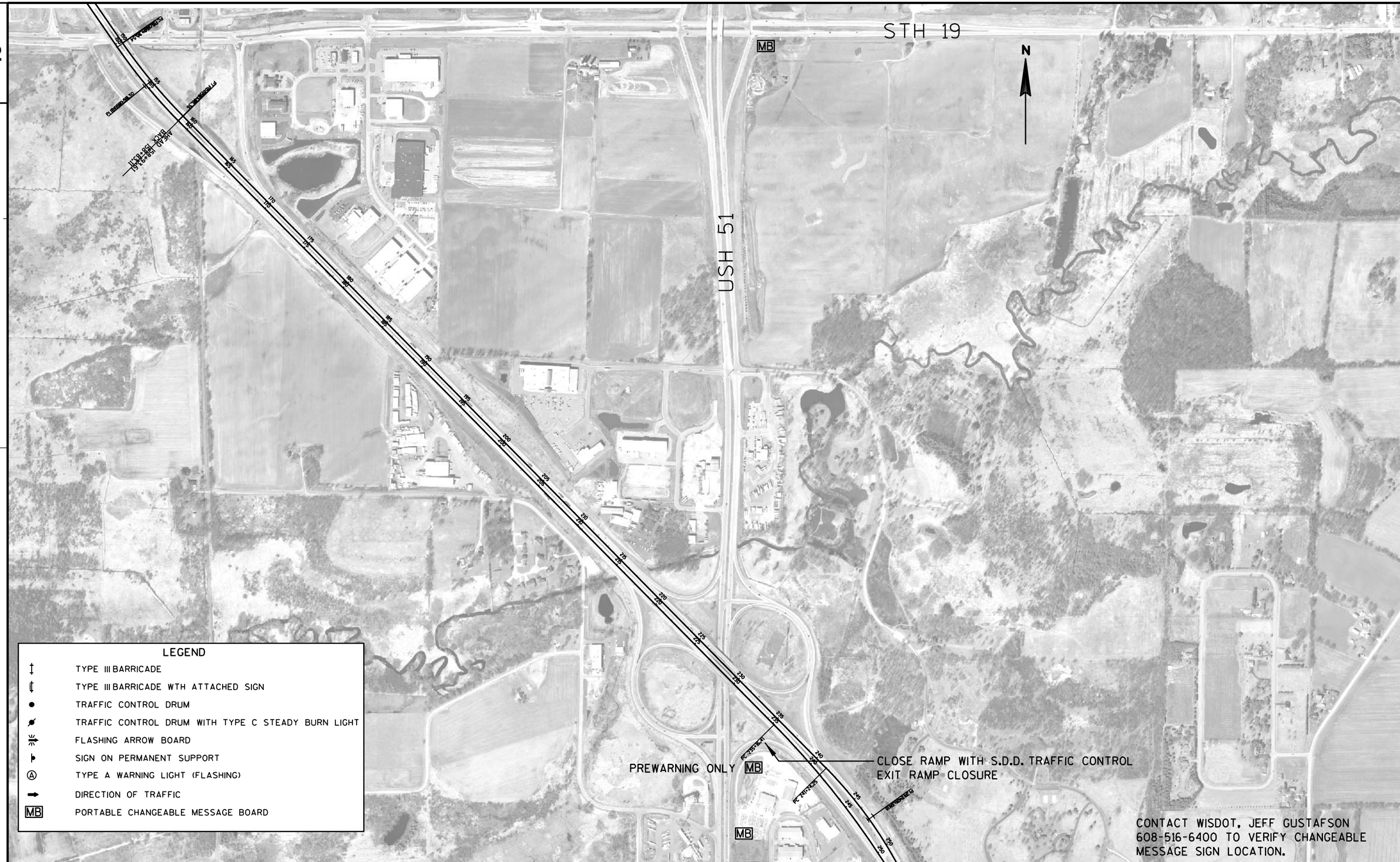

PROJECT NO:1010-00-72	HWY:IH 39	COUNTY:DANE	TRAFFIC CONTROL - NB USH 51 TO SB IH 39 EXIT RAMP CLOSURE	SHEET	E

FILE NAME : r:\Support\CADDS\Projects\d1_10100072\025006_tc.dgn PLOT DATE : 25-APR-2012 09:54 PLOT BY : DOTJ3J PLOT NAME : PLOT SCALE : 800.000000:1.000000 WISDOT/CADDS SHEET 42

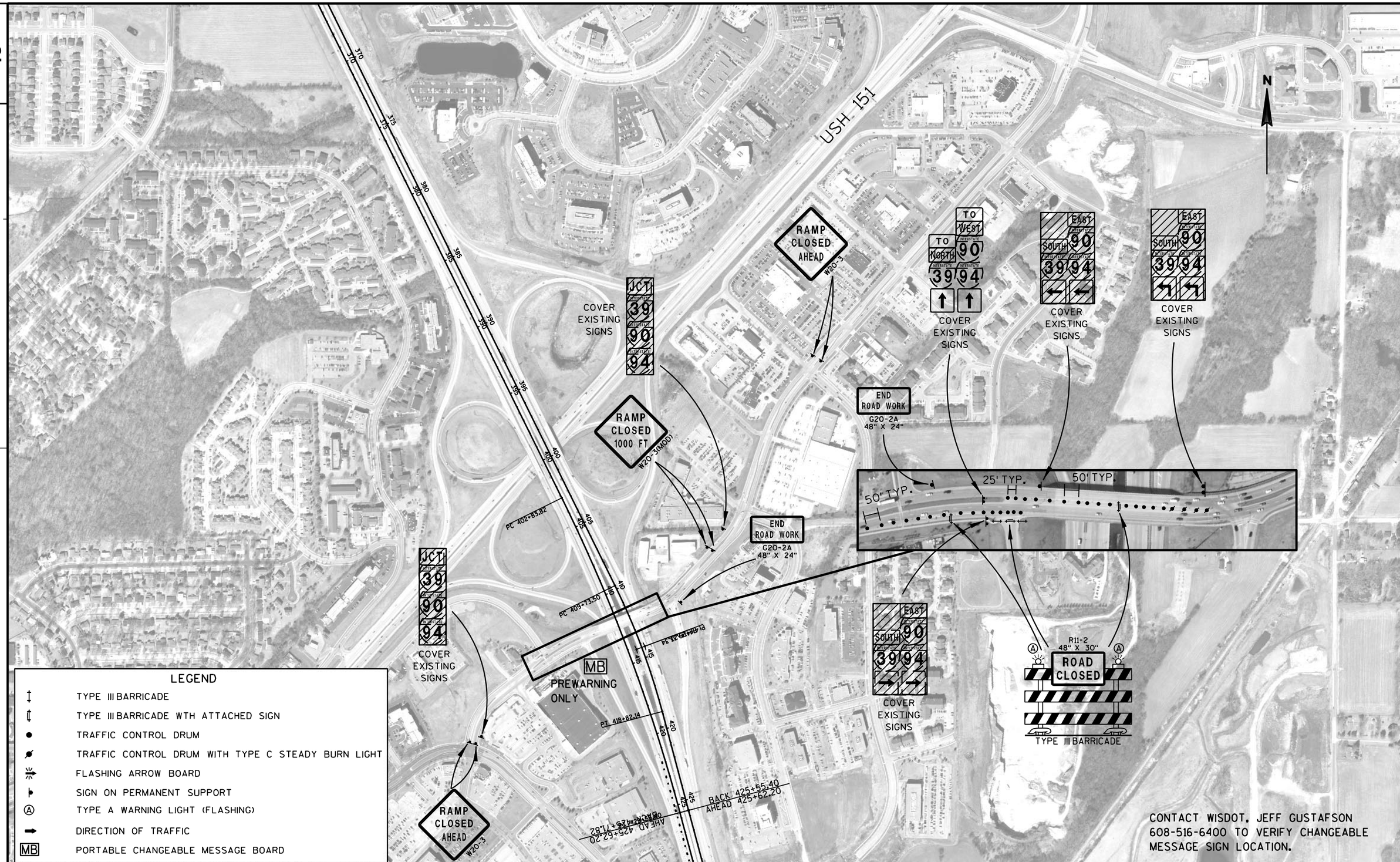

PROJECT NO:1010-00-72	HWY:IH 39	COUNTY:DANE	TRAFFIC CONTROL - HIGH CROSSING BLVD/SB IH 39 RAMP CLOSURE	SHEET	E

FILE NAME : r:\Support\CADDS\Projects\d1_10100072\025007_tc.dgn PLOT DATE : 25-APR-2012 09:54 PLOT BY : DOTJ3J PLOT NAME : PLOT SCALE : 600.000000:1.000000 WISDOT/CADDS SHEET 42

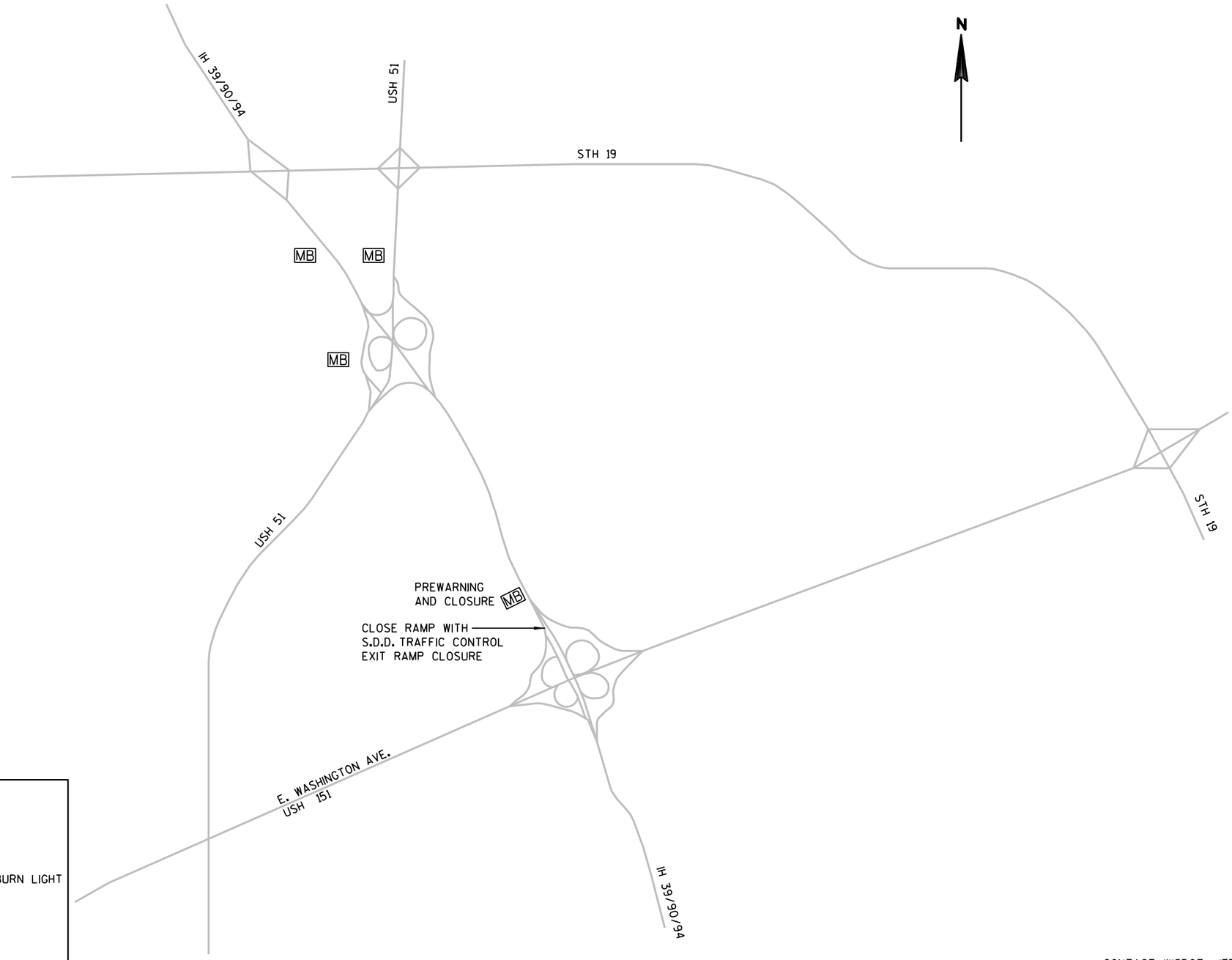

LEGEND

- TYPE III BARRICADE
- TYPE III BARRICADE WTH ATTACHED SIGN
- TRAFFIC CONTROL DRUM
- TRAFFIC CONTROL DRUM WITH TYPE C STEADY BURN LIGHT
- FLASHING ARROW BOARD
- SIGN ON PERMANENT SUPPORT
- Ⓐ TYPE A WARNING LIGHT (FLASHING)
- DIRECTION OF TRAFFIC
- MB PORTABLE CHANGEABLE MESSAGE BOARD

CONTACT WISDOT, JEFF GUSTAFSON
608-516-6400 TO VERIFY CHANGEABLE
MESSAGE SIGN LOCATION.

PROJECT NO:1010-00-72	HWY:IH 39	COUNTY:DANE	TRAFFIC CONTROL - SB IH 39 TO USH 151 EXIT RAMP CLOSURE	SHEET	E

CONTACT WISDOT, JEFF GUSTAFSON
608-516-6400 TO VERIFY CHANGEABLE
MESSAGE SIGN LOCATION.

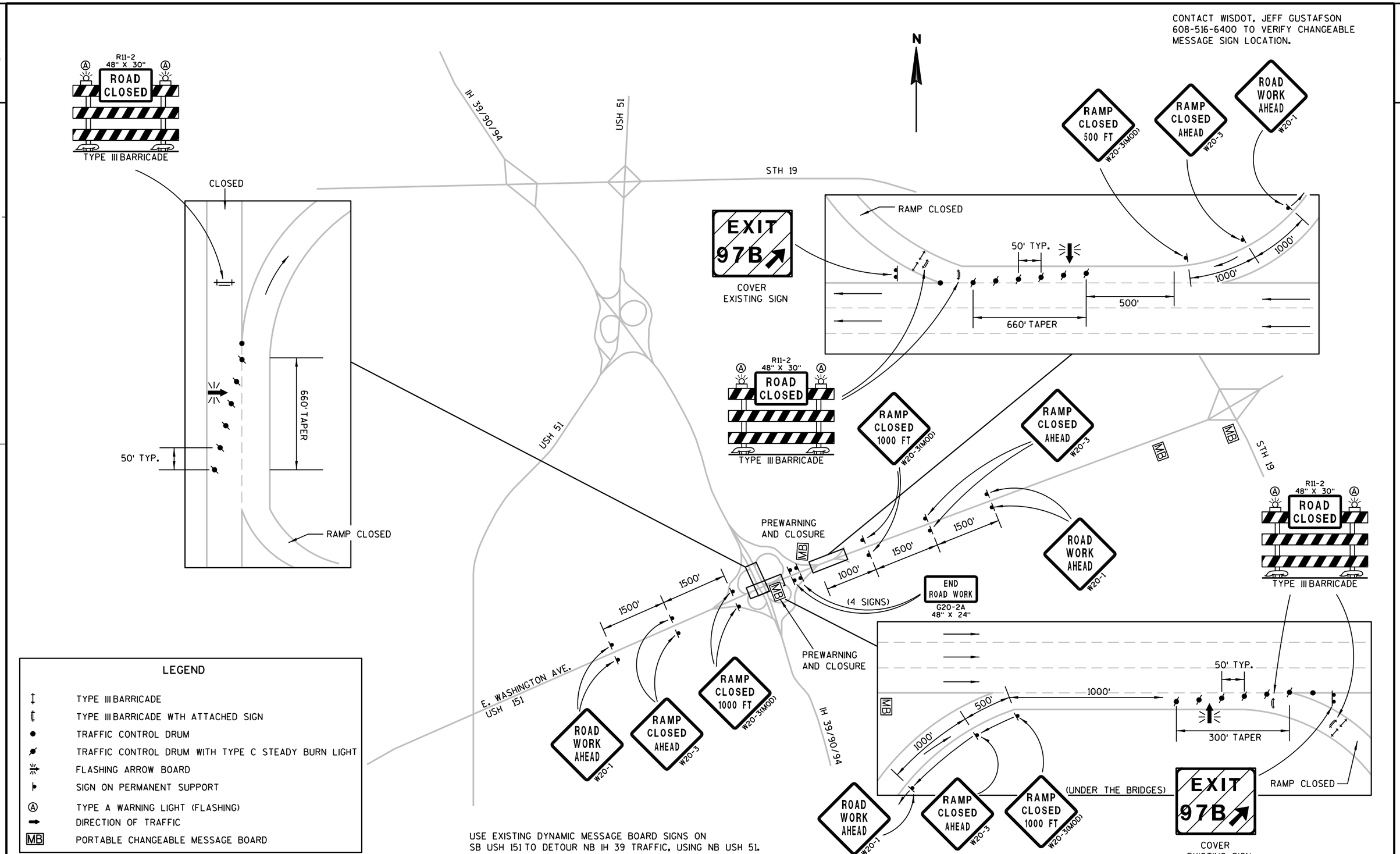

PROJECT NO:1010-00-72	HWY:IH 39	COUNTY:DANE	TRAFFIC CONTROL - USH 151 TO NB IH 39 EXIT RAMP CLOSURES	SHEET	E

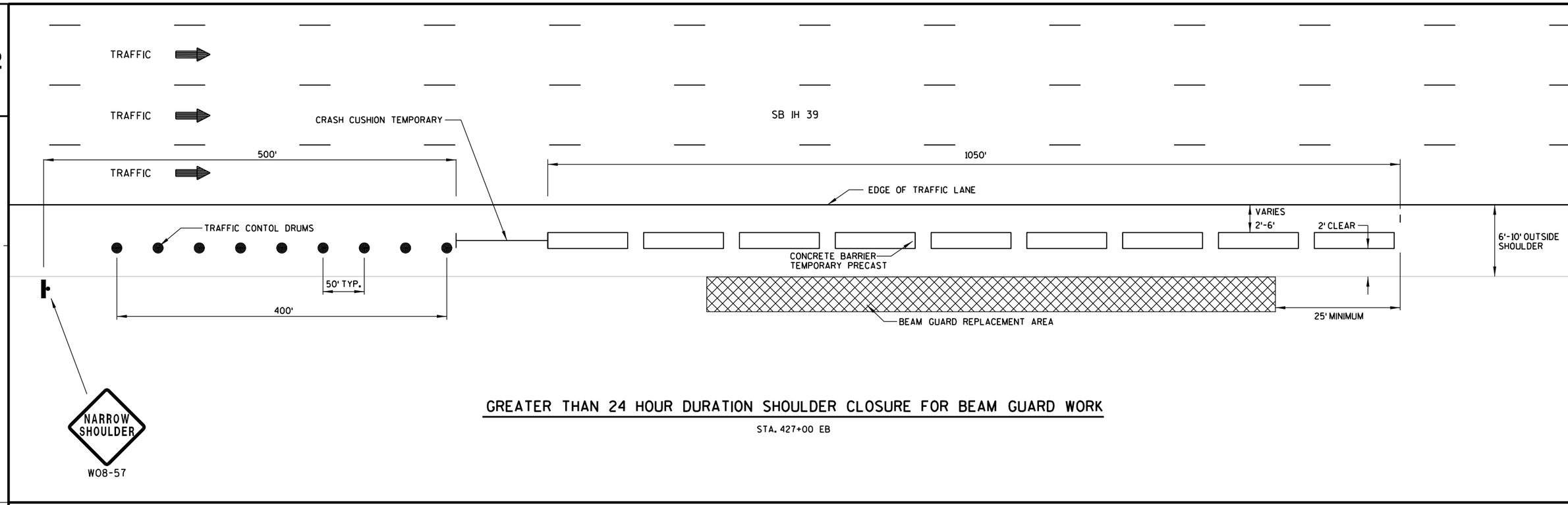

GREATER THAN 24 HOUR DURATION SHOULDER CLOSURE FOR BEAM GUARD WORK

STA. 427+00 EB

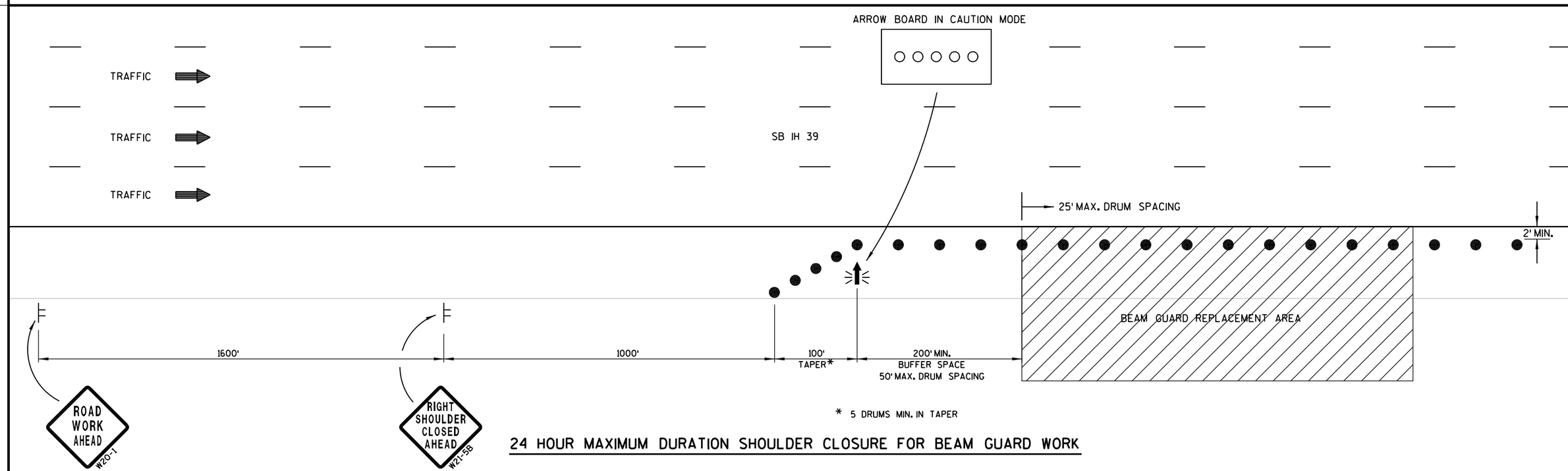

* 5 DRUMS MIN. IN TAPER

24 HOUR MAXIMUM DURATION SHOULDER CLOSURE FOR BEAM GUARD WORK

PROJECT NO:1010-00-72	HWY:IH 39	COUNTY:DANE	TRAFFIC CONTROL DETAILS	SHEET	E

2

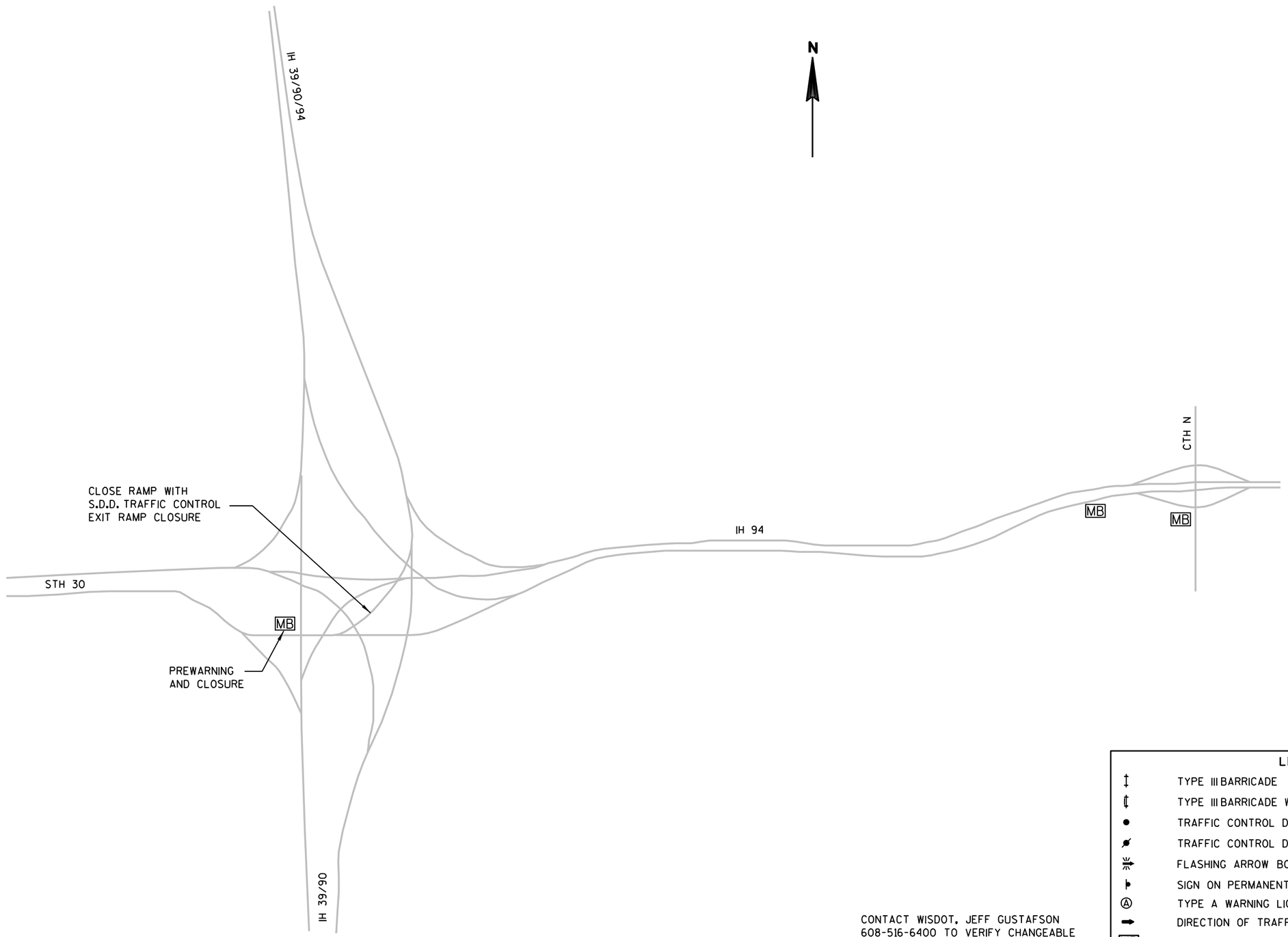

CONTACT WISDOT, JEFF GUSTAFSON
608-516-6400 TO VERIFY CHANGEABLE
MESSAGE SIGN LOCATION.

LEGEND

- TYPE III BARRICADE
- TYPE III BARRICADE WTH ATTACHED SIGN
- TRAFFIC CONTROL DRUM
- TRAFFIC CONTROL DRUM WITH TYPE C STEADY BURN LIGHT
- FLASHING ARROW BOARD
- SIGN ON PERMANENT SUPPORT
- TYPE A WARNING LIGHT (FLASHING)
- DIRECTION OF TRAFFIC
- MB PORTABLE CHANGEABLE MESSAGE BOARD

PROJECT NO:1010-00-72	HWY:IH 39	COUNTY:DANE	TRAFFIC CONTROL - EB STH 30 TO NB IH 39 RAMP CLOSURE	SHEET	E

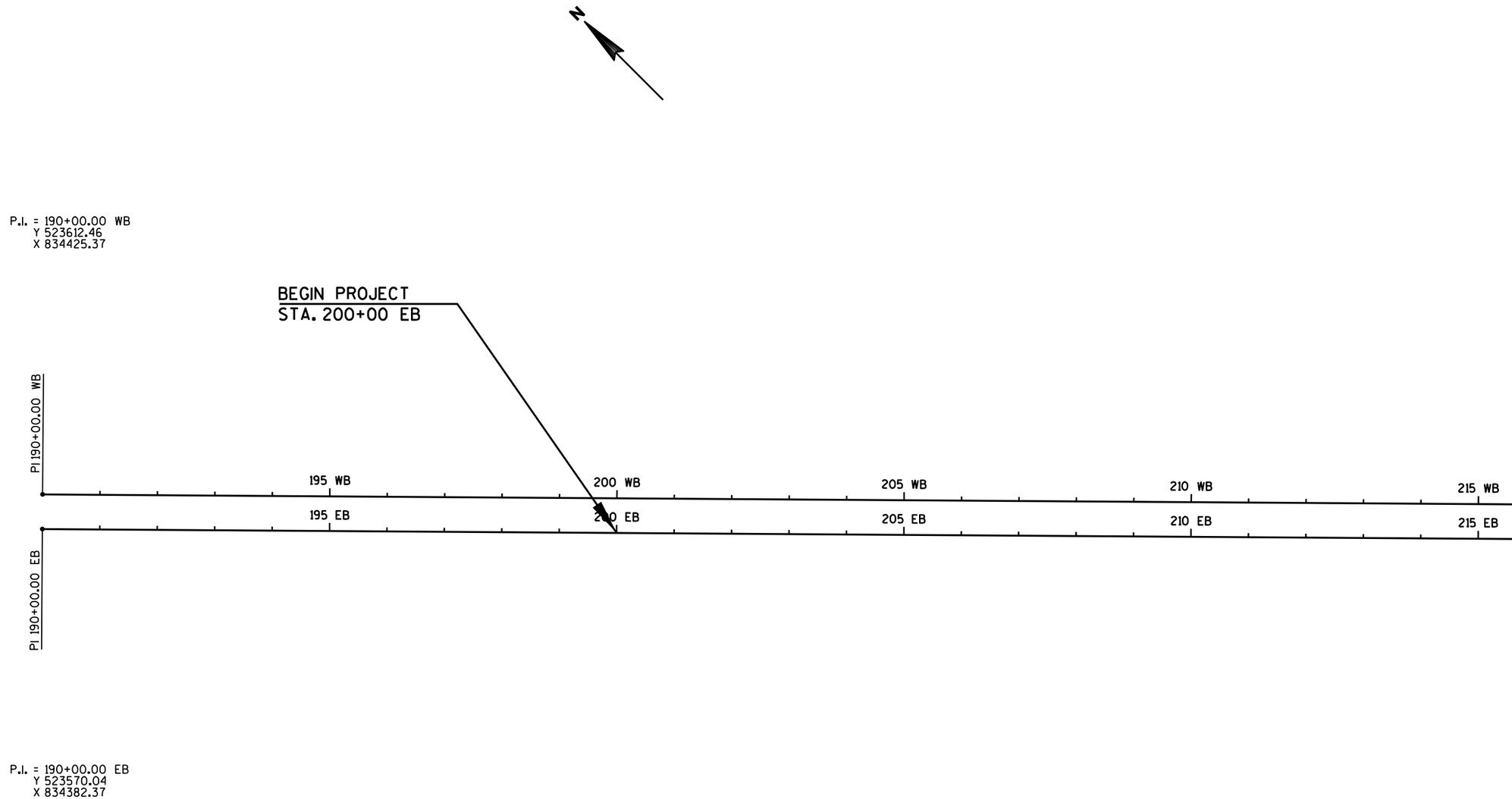

PROJECT NO: 1010-00-72	HWY: IH 39	COUNTY: DANE	ALIGNMENT LAYOUT	SHEET	E

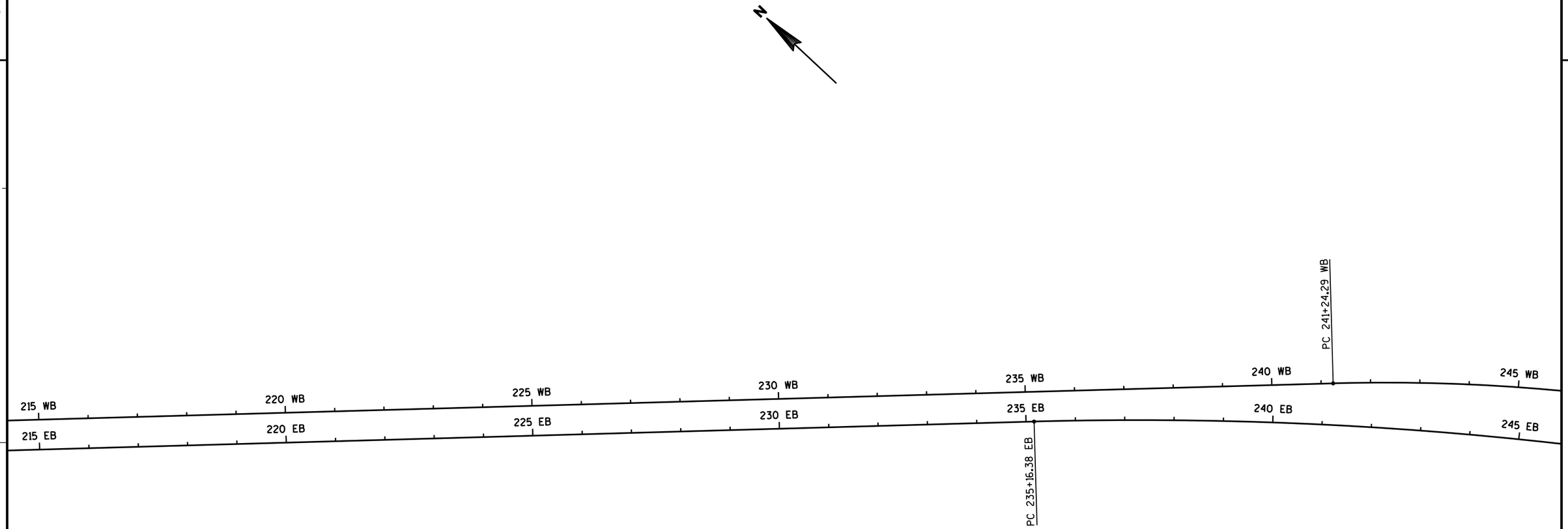

PROJECT NO:1010-00-72	HWY:IH 39	COUNTY:DANE	ALIGNMENT LAYOUT	SHEET	E

FILE NAME : r:\Support\CADDS\Projects\d1_10100072\027202_ad.dgn PLOT DATE : 25-APR-2012 09:55 PLOT BY : DOTJ3J PLOT NAME : PLOT SCALE : 200.000000:1.000000 WISDOT/CADDS

P.I. = 247+26.68 WB
Y 519535.64
X 838447.11
Δ. = 17°55'27" RT.
D. = 1°30'00"
T. = 602.39'
L. = 1194.94'
R. = 3819.72'

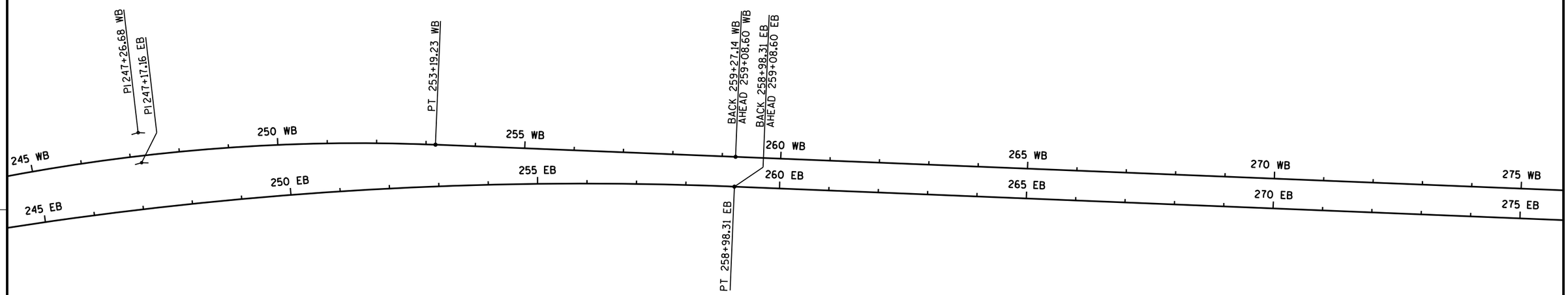

P.I. = 247+17.16 EB
Y 519500.00
X 838397.42
Δ. = 17°55'27" RT.
D. = 0°45'09"
T. = 1200.77'
L. = 2381.93'
R. = 7614.00'

PROJECT NO:1010-00-72	HWY:IH 39	COUNTY:DANE	ALIGNMENT LAYOUT	SHEET	E

FILE NAME : r:\Support\CADDS\Projects\d1_10100072\027203_ad.dgn PLOT DATE : 25-APR-2012 09:55 PLOT BY : DOTJ3J PLOT NAME : PLOT SCALE : 200.000000:1.000000 WISDOT/CADDS SHEET 42

2

2

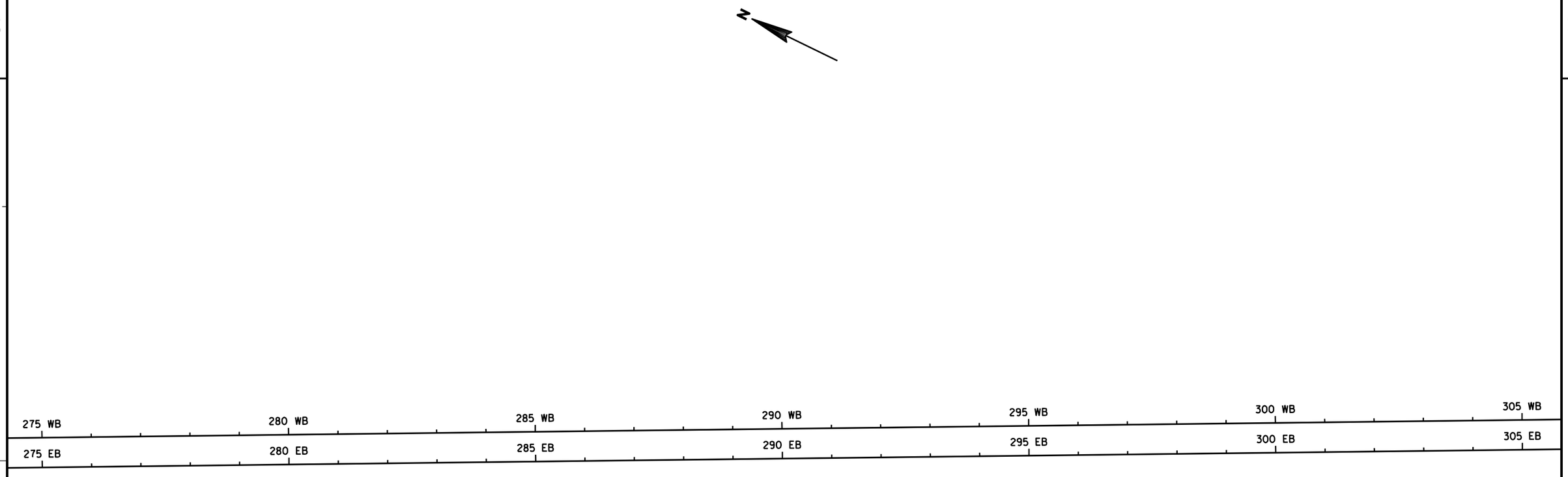

PROJECT NO:1010-00-72	HWY:IH 39	COUNTY:DANE	ALIGNMENT LAYOUT	SHEET	E

FILE NAME : r:\Support\CADDS\Projects\d1_10100072\027204_ad.dgn PLOT DATE : 25-APR-2012 09:55 PLOT BY : DOTJ3J PLOT NAME : PLOT SCALE : 200.000000:1.000000 WISDOT/CADDS

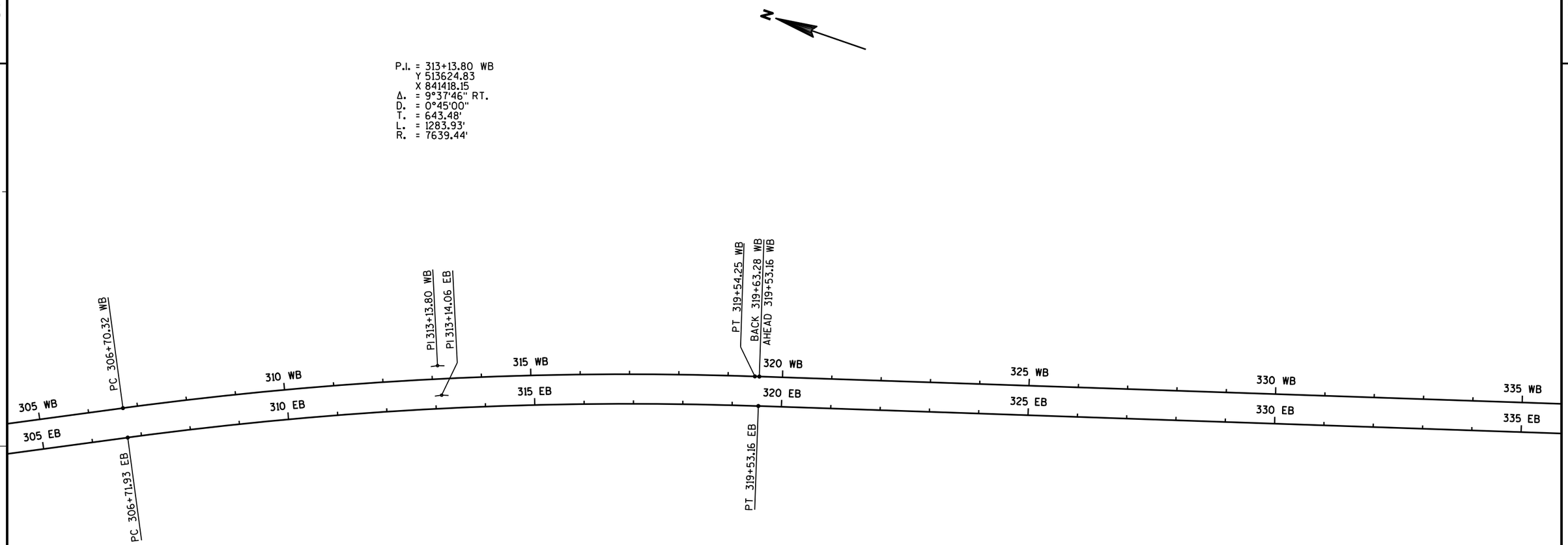

PROJECT NO:1010-00-72	HWY:IH 39	COUNTY:DANE	ALIGNMENT LAYOUT	SHEET	E

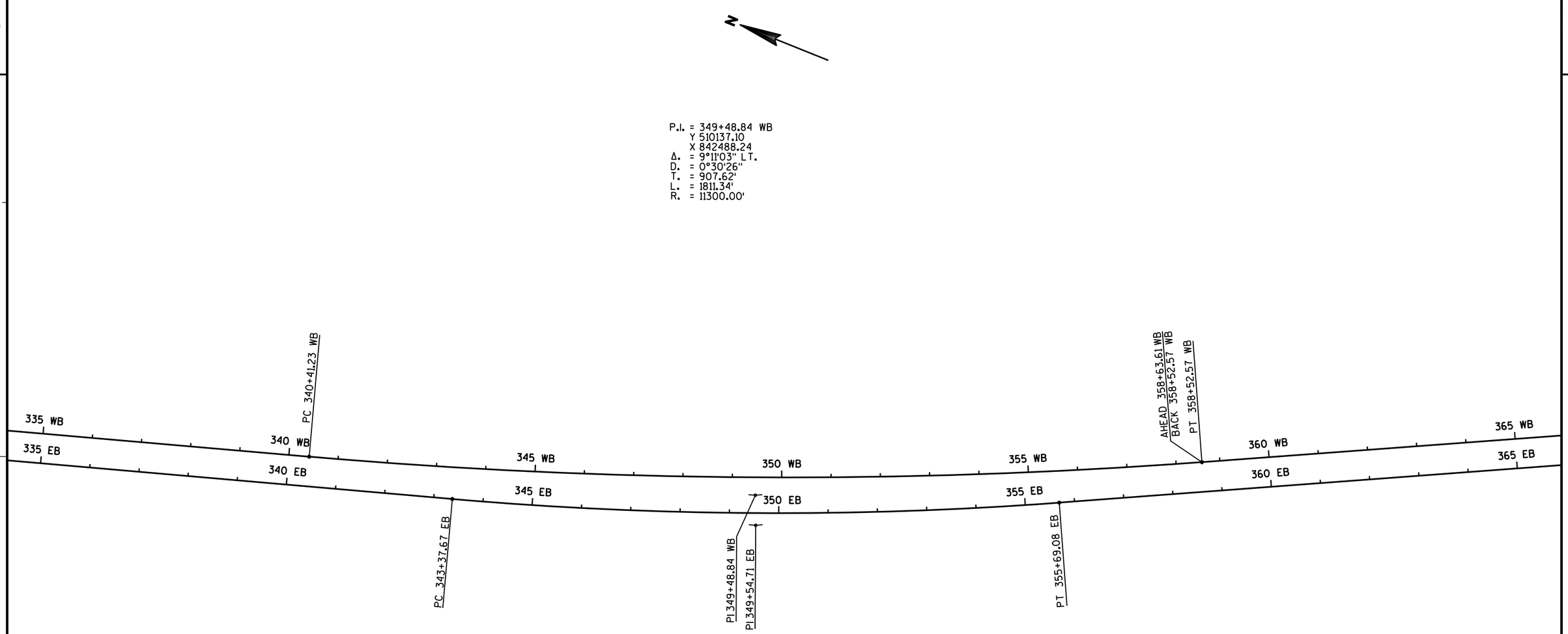

P.I. = 349+54.71 EB
Y 510113.69
X 842431.89
Δ. = 9°14'08" LT.
D. = 0°45'00"
T. = 617.04'
L. = 1231.41'
R. = 7639.44'

PROJECT NO:1010-00-72	HWY:IH 39	COUNTY:DANE	ALIGNMENT LAYOUT	SHEET	E

2

2

N

365 WB 370 WB 375 WB 380 WB 385 WB 390 WB 395 WB

365 EB 370 EB 375 EB 380 EB 385 EB 390 EB 395 EB

PROJECT NO:1010-00-72	HWY:IH 39	COUNTY:DANE	ALIGNMENT LAYOUT	SHEET	E

FILE NAME : r:\Support\CADDS\Projects\d1_10100072\027207_ad.dgn PLOT DATE : 25-APR-2012 09:56 PLOT BY : DOTJ3J PLOT NAME : PLOT SCALE : 200.000000:1.000000 WISDOT/CADDS SHEET 42

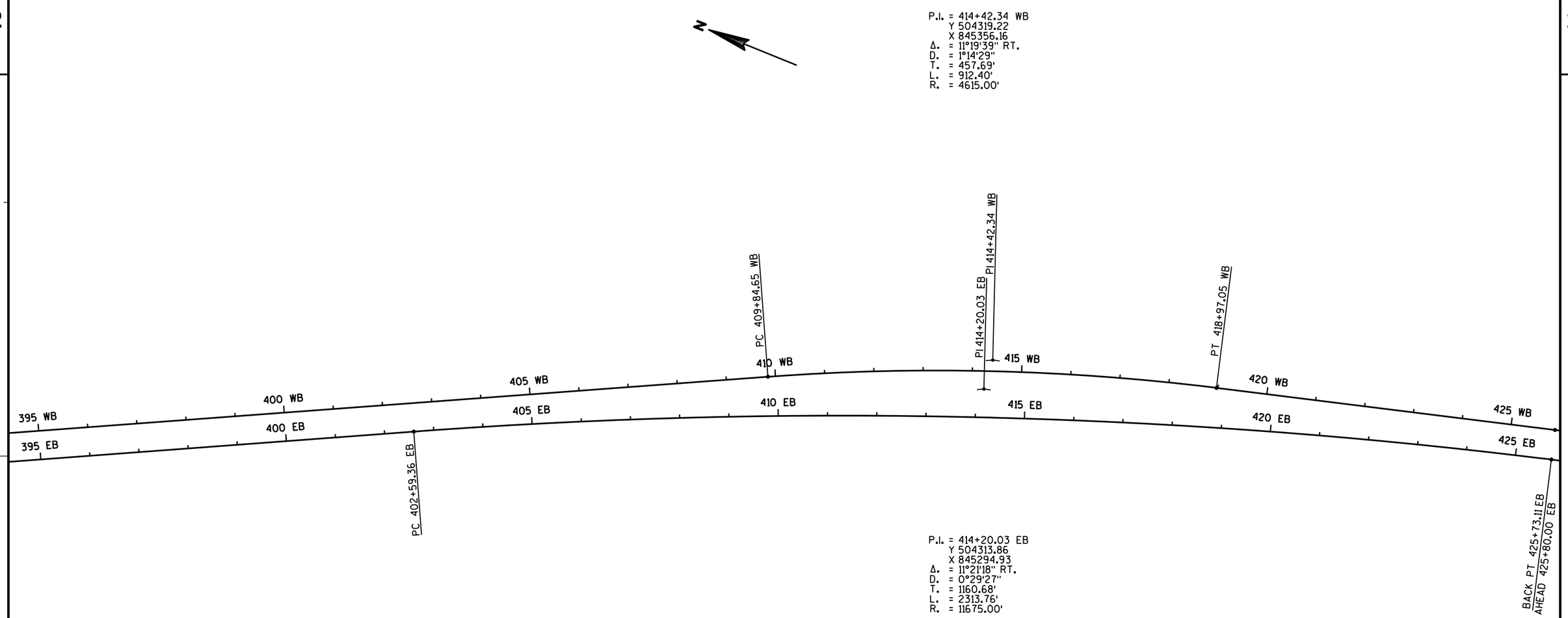

PROJECT NO:1010-00-72	HWY:IH 39	COUNTY:DANE	ALIGNMENT LAYOUT	SHEET	E

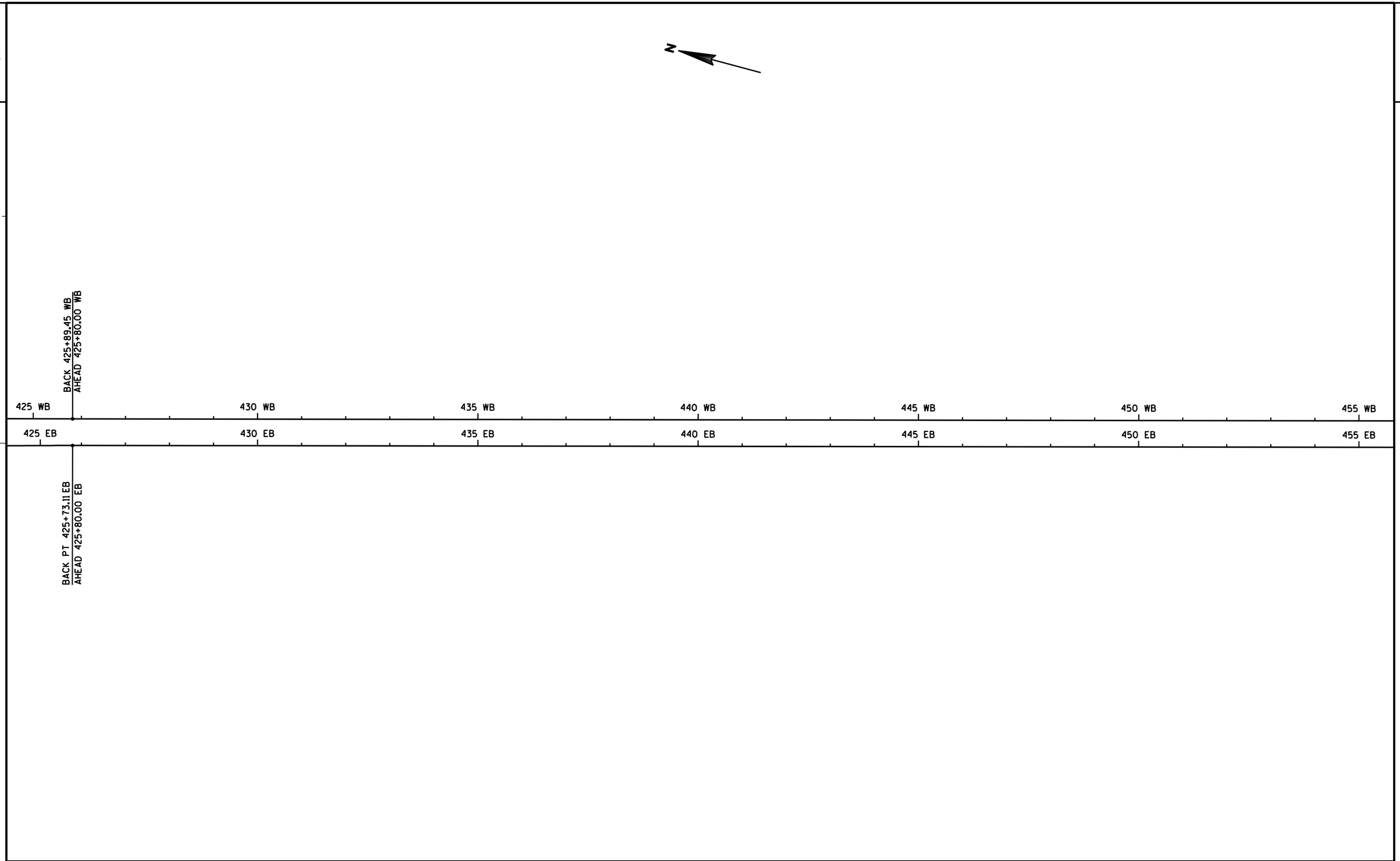

PROJECT NO:1010-00-72	HWY:IH 39	COUNTY:DANE	ALIGNMENT LAYOUT	SHEET	E

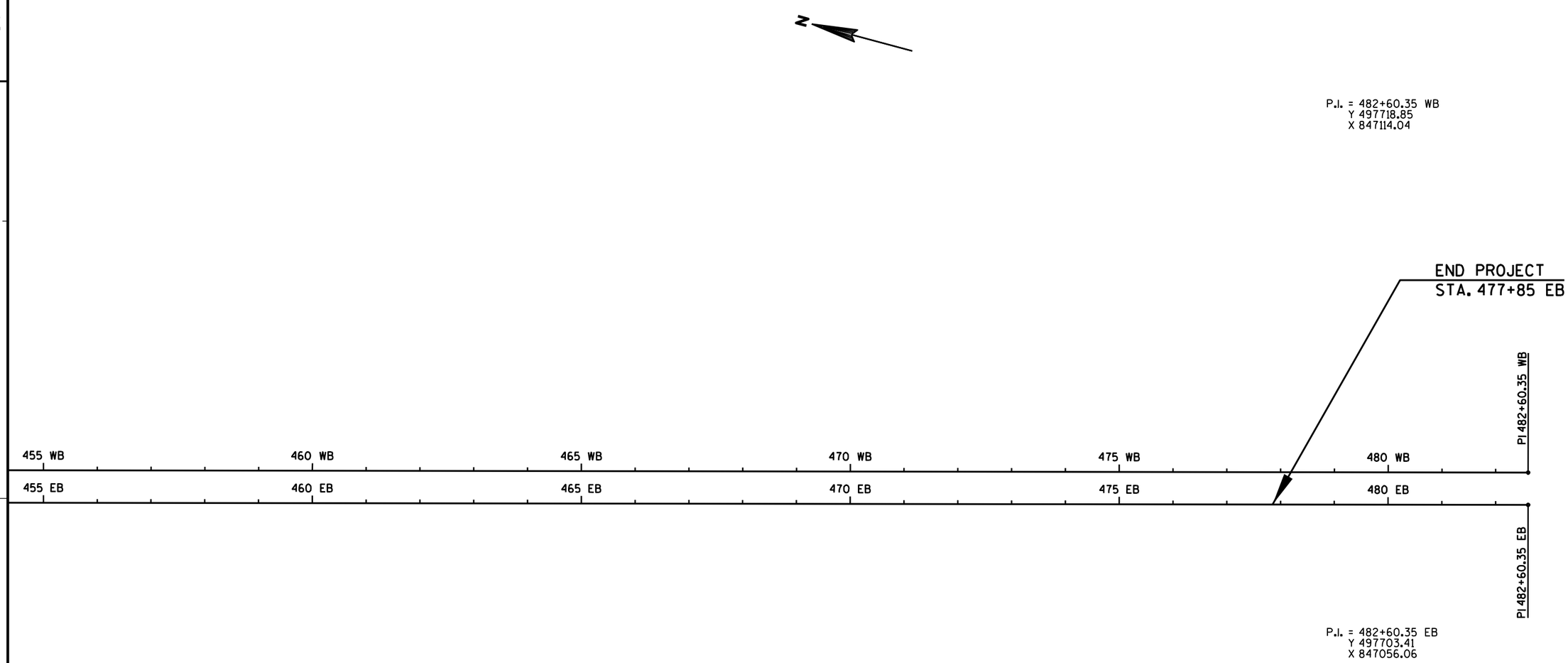

PROJECT NO:1010-00-72	HWY:IH 39	COUNTY:DANE	ALIGNMENT LAYOUT	SHEET	E

FILE NAME : r:\Support\CADDS\Projects\d1_10100072\027210_ad.dgn PLOT DATE : 25-APR-2012 09:56 PLOT BY : DOTJ3J PLOT NAME : PLOT SCALE : 200.000000:1.000000

3

DATE 09AUG12 E S T I M A T E O F Q U A N T I T I E S

LINE NUMBER	ITEM	ITEM DESCRIPTION	UNIT	TOTAL	1010-00-72 QUANTITY
0010	204.0100	REMOVING PAVEMENT	SY	761.000	761.000
0020	204.0105	REMOVING PAVEMENT BUTT JOINTS	SY	18,793.000	18,793.000
0030	204.0110	REMOVING ASPHALTIC SURFACE	SY	3,554.000	3,554.000
0040	204.0115	REMOVING ASPHALTIC SURFACE BUTT JOINTS	SY	14,636.000	14,636.000
0050	204.0150	REMOVING CURB & GUTTER	LF	6,050.000	6,050.000
0060	204.0165	REMOVING GUARDRAIL	LF	4,250.000	4,250.000
0070	204.9060.S	REMOVING (ITEM DESCRIPTION) 01. DELINEATORS	EACH	170.000	170.000
0080	205.0100	EXCAVATION COMMON	CY	2,247.000	2,247.000
0090	208.1100	SELECT BORROW	CY	1,959.000	1,959.000
0100	213.0100	FINISHING ROADWAY (PROJECT) 01. 1010-00-72	EACH	1.000	1.000
0110	305.0110	BASE AGGREGATE DENSE 3/4-INCH	TON	8,960.000	8,960.000
0120	305.0120	BASE AGGREGATE DENSE 1 1/4-INCH	TON	1,790.000	1,790.000
0130	312.0110	SELECT CRUSHED MATERIAL	TON	1,100.000	1,100.000
0140	390.0403	BASE PATCHING CONCRETE SHES	SY	110.000	110.000
0150	416.0610	DRILLED TIE BARS	EACH	1,719.000	1,719.000
0160	416.0620	DRILLED DOWEL BARS	EACH	160.000	160.000
0170	440.4410.S	INCENTIVE IRI RIDE	DOL	61,400.000	61,400.000
0180	465.0305	ASPHALTIC SURFACE SAFETY ISLANDS	TON	455.000	455.000
0190	465.0400	ASPHALTIC SHOULDER RUMBLE STRIP	LF	97,700.000	97,700.000
0200	495.0100.S	WARRANTED HMA PAVEMENT OVERLAY MAINLINE	TON	69,000.000	69,000.000
0210	495.0200.S	WARRANTED HMA PAVEMENT OVERLAY ANCILLARY	TON	6,700.000	6,700.000
0220	601.0553	CONCRETE CURB AND GUTTER 4-INCH SLOPED 36-INCH TYPE D	LF	1,990.000	1,990.000
0230	603.8000	CONCRETE BARRIER TEMPORARY PRECAST DELIVERED	LF	1,150.000	1,150.000
0240	603.8125	CONCRETE BARRIER TEMPORARY PRECAST INSTALLED	LF	1,150.000	1,150.000
0250	611.8115	ADJUSTING INLET COVERS	EACH	111.000	111.000
0260	614.0400	ADJUSTING STEEL PLATE BEAM GUARD	LF	3,375.000	3,375.000
0270	614.2300	MGS GUARDRAIL 3	LF	14,612.500	14,612.500
0280	614.2500	MGS THRIE BEAM TRANSITION	LF	197.000	197.000
0290	614.2610	MGS GUARDRAIL TERMINAL EAT	EACH	13.000	13.000
0300	614.2620	MGS GUARDRAIL TERMINAL TYPE 2	EACH	13.000	13.000
0310	619.1000	MOBILIZATION	EACH	1.000	1.000
0320	620.0300	CONCRETE MEDIAN SLOPED NOSE	SF	335.000	335.000
0330	624.0100	WATER	MGAL	65.000	65.000
0340	625.0500	SALVAGED TOPSOIL	SY	28,100.000	28,100.000
0350	627.0200	MULCHING	SY	28,100.000	28,100.000
0360	628.1504	SILT FENCE	LF	13,900.000	13,900.000
0370	628.1520	SILT FENCE MAINTENANCE	LF	13,900.000	13,900.000
0380	628.1905	MOBILIZATIONS EROSION CONTROL	EACH	8.000	8.000
0390	628.1910	MOBILIZATIONS EMERGENCY EROSION CONTROL	EACH	6.000	6.000
0400	628.2004	EROSION MAT CLASS I TYPE B	SY	14,230.000	14,230.000
0410	628.7504	TEMPORARY DITCH CHECKS	LF	24.000	24.000
0420	629.0210	FERTILIZER TYPE B	CWT	34.000	34.000
0430	630.0130	SEEDING MIXTURE NO. 30	LB	950.000	950.000
0440	630.0200	SEEDING TEMPORARY	LB	1,400.000	1,400.000
0450	633.0100	DELINEATOR POSTS STEEL	EACH	223.000	223.000
0460	633.0500	DELINEATOR REFLECTORS	EACH	616.000	616.000
0470	633.1000	DELINEATOR BRACKETS	EACH	305.000	305.000
0480	634.0614	POSTS WOOD 4X6-INCH X 14-FT	EACH	25.000	25.000
0490	634.0616	POSTS WOOD 4X6-INCH X 16-FT	EACH	9.000	9.000
0500	634.0618	POSTS WOOD 4X6-INCH X 18-FT	EACH	54.000	54.000

3

3

DATE 09AUG12 E S T I M A T E O F Q U A N T I T I E S

LINE NUMBER	ITEM	ITEM DESCRIPTION	UNIT	TOTAL	1010-00-72 QUANTITY
0510	634.0620	POSTS WOOD 4X6-INCH X 20-FT	EACH	49.000	49.000
0520	634.0622	POSTS WOOD 4X6-INCH X 22-FT	EACH	16.000	16.000
0530	635.0200	SIGN SUPPORTS STRUCTURAL STEEL HS	LB	3,775.500	3,775.500
0540	636.0100	SIGN SUPPORTS CONCRETE MASONRY	CY	7.100	7.100
0550	636.0500	SIGN SUPPORTS STEEL REINFORCEMENT	LB	414.000	414.000
0560	637.0101	SIGNS TYPE I	SF	2,185.000	2,185.000
0570	637.0202	SIGNS REFLECTIVE TYPE II	SF	898.000	898.000
0580	637.0402	SIGNS REFLECTIVE FOLDING TYPE II	SF	60.000	60.000
0590	638.2102	MOVING SIGNS TYPE II	EACH	2.000	2.000
0600	638.2601	REMOVING SIGNS TYPE I	EACH	18.000	18.000
0610	638.2602	REMOVING SIGNS TYPE II	EACH	147.000	147.000
0620	638.3000	REMOVING SMALL SIGN SUPPORTS	EACH	107.000	107.000
0630	638.3100	REMOVING STRUCTURAL STEEL SIGN SUPPORTS	EACH	6.000	6.000
0640	638.3620	ERECTING STATE OWNED SIGNS TYPE II	EACH	167.000	167.000
0650	638.4000	MOVING SMALL SIGN SUPPORTS	EACH	2.000	2.000
0660	642.5401	FIELD OFFICE TYPE D	EACH	1.000	1.000
0670	643.0100	TRAFFIC CONTROL (PROJECT) 01. 1010-00-72	EACH	1.000	1.000
0680	643.0300	TRAFFIC CONTROL DRUMS	DAY	21,720.000	21,720.000
0690	643.0420	TRAFFIC CONTROL BARRICADES TYPE III	DAY	1,506.000	1,506.000
0700	643.0705	TRAFFIC CONTROL WARNING LIGHTS TYPE A	DAY	354.000	354.000
0710	643.0715	TRAFFIC CONTROL WARNING LIGHTS TYPE C	DAY	3,614.000	3,614.000
0720	643.0800	TRAFFIC CONTROL ARROW BOARDS	DAY	377.000	377.000
0730	643.0900	TRAFFIC CONTROL SIGNS	DAY	4,921.000	4,921.000
0740	643.0920	TRAFFIC CONTROL COVERING SIGNS TYPE II	EACH	688.000	688.000
0750	646.0106	PAVEMENT MARKING EPOXY 4-INCH	LF	51,750.000	51,750.000
0760	646.0406	PAVEMENT MARKING SAME DAY EPOXY 4-INCH	LF	52,500.000	52,500.000
0770	646.0873.S	PAVEMENT MARKING WET REFLECTIVE TAPE 8-INCH	LF	12,888.000	12,888.000
0780	646.0881.S	PAVEMENT MARKING GROOVED WET REFLECTIVE TAPE 4-INCH	LF	28,915.000	28,915.000
0790	647.0746	PAVEMENT MARKING DIAGONAL EPOXY 24-INCH	LF	890.000	890.000
0800	649.0200	TEMPORARY PAVEMENT MARKING REFLECTIVE PAINT 4-INCH	LF	174,900.000	174,900.000
0810	650.4500	CONSTRUCTION STAKING SUBGRADE	LF	1,140.000	1,140.000
0820	650.5000	CONSTRUCTION STAKING BASE	LF	1,140.000	1,140.000
0830	650.8000	CONSTRUCTION STAKING RESURFACING REFERENCE	LF	55,500.000	55,500.000
0840	650.9910	CONSTRUCTION STAKING SUPPLEMENTAL CONTROL (PROJECT) 01. 1010-00-72	LS	1.000	1.000
0850	650.9920	CONSTRUCTION STAKING SLOPE STAKES	LF	44,170.000	44,170.000
0860	652.0125	CONDUIT RIGID METALLIC 2-INCH	LF	10.000	10.000
0870	652.0210	CONDUIT RIGID NONMETALLIC SCHEDULE 40 1-INCH	LF	115.000	115.000
0880	652.0225	CONDUIT RIGID NONMETALLIC SCHEDULE 40 2-INCH	LF	1,370.000	1,370.000
0890	652.0605	CONDUIT SPECIAL 2-INCH	LF	100.000	100.000
0900	653.0135	PULL BOXES STEEL 24X36-INCH	EACH	7.000	7.000
0910	653.0140	PULL BOXES STEEL 24X42-INCH	EACH	5.000	5.000
0920	654.0105	CONCRETE BASES TYPE 5	EACH	5.000	5.000
0930	655.0515	ELECTRICAL WIRE TRAFFIC SIGNALS 10 AWG	LF	11,210.000	11,210.000
0940	655.0615	ELECTRICAL WIRE LIGHTING 10 AWG	LF	100.000	100.000
0950	655.0625	ELECTRICAL WIRE LIGHTING 6 AWG	LF	300.000	300.000
0960	656.0200	ELECTRICAL SERVICE METER BREAKER PEDESTAL (LOCATION) 01. MBHA05	LS	1.000	1.000

3

DATE 09AUG12 E S T I M A T E O F Q U A N T I T I E S

LINE NUMBER	ITEM	ITEM DESCRIPTION	UNIT	TOTAL	1010-00-72 QUANTITY
0970	656.0500	ELECTRICAL SERVICE BREAKER DISCONNECT BOX (LOCATION) 01. DMS-13-0023	LS	1.000	1.000
0980	657.0255	TRANSFORMER BASES BREAKAWAY 11 1/2-INCH BOLT CIRCLE	EACH	5.000	5.000
0990	659.0802	PLAQUES SEQUENCE IDENTIFICATION	EACH	1.000	1.000
1000	670.0100	FIELD SYSTEM INTEGRATOR	LS	1.000	1.000
1010	670.0200	ITS DOCUMENTATION	LS	1.000	1.000
1020	673.0225.S	INSTALL POLE MOUNTED CABINET	EACH	1.000	1.000
1030	690.0150	SAWING ASPHALT	LF	10.000	10.000
1040	690.0250	SAWING CONCRETE	LF	8,910.000	8,910.000
1050	ASP.1T0A	ON-THE-JOB TRAINING APPRENTICE AT $5. 00/HR	HRS	550.000	550.000
1060	ASP.1T0G	ON-THE-JOB TRAINING GRADUATE AT $5.00/HR	HRS	800.000	800.000
1070	SPV.0045	SPECIAL 01. PORTABLE CHANGEABLE MESSAGE SIGN	DAY	537.000	537.000
1080	SPV.0060	SPECIAL 01. RAMP CLOSURE GATES HARDWIRED 32-FT	EACH	1.000	1.000
1090	SPV.0060	SPECIAL 02. RAMP CLOSURE GATES ARMS STOCKPILE 32-FT	EACH	1.000	1.000
1100	SPV.0060	SPECIAL 03. RAMP CLOSURE GATES HARDWIRED 26-FT	EACH	2.000	2.000
1110	SPV.0060	SPECIAL 04. RAMP CLOSURE GATES HARDWIRED 24-FT	EACH	2.000	2.000
1120	SPV.0060	SPECIAL 05. MARKER POSTS FLEXIBLE FOR GUARDRAIL TERMINAL	EACH	13.000	13.000
1130	SPV.0060	SPECIAL 06. INSTALL SPREAD SPECTRUM RADIO	EACH	2.000	2.000
1140	SPV.0060	SPECIAL 07. INSTALL CABINET MOUNT YAGI ANTENNA	EACH	1.000	1.000
1150	SPV.0060	SPECIAL 08. INSTALL POLE MOUNT YAGI ANTENNA	EACH	1.000	1.000
1160	SPV.0060	SPECIAL 09. INSTALL GROUND MOUNT DYNAMIC MESSAGE SIGN	EACH	1.000	1.000
1170	SPV.0060	SPECIAL 10. INSTALL TERMINAL SERVER	EACH	1.000	1.000
1180	SPV.0060	SPECIAL 11. GROUND ROD	EACH	1.000	1.000
1190	SPV.0060	SPECIAL 12. GROUNDING PULL BOX	EACH	16.000	16.000
1200	SPV.0090	SPECIAL 01. REMOVING HMA PAVEMENT TAPERED & NOTCHED LONGITUDINAL JOINTS MILLING	LF	441,000.000	441,000.000
1210	SPV.0090	SPECIAL 02. CONCRETE CURB & GUTTER 4-INCH SLOPED 36-INCH TYPE A SPECIAL	LF	3,950.000	3,950.000
1220	SPV.0090	SPECIAL 03. SAWING CONCRETE PARTIAL SAWCUT	LF	1,270.000	1,270.000
1230	SPV.0180	SPECIAL 01. MILLING & ASPHALT FILL CRACK TREATMENT	SY	200.000	200.000
1240	SPV.0180	SPECIAL 02. CONTINUOUSLY REINFORCED CONCRETE PAVEMENT SHES REPAIR	SY	1,250.000	1,250.000

3

EARTHWORK

GROUP CODE	STATION - STATION (A)	LOCATION (B)	205.0100 EXCAVATION COMMON CY (C)	UNUSABLE PAVEMENT INCLUDED IN EXCAVATION COMMON CY (D)	AVAILABLE MATERIAL CY (E)	UNEXPANDED FILL CY (F)	EXPANDED FILL CY (G)	208.1100 SELECT BORROW CY (I)	MASS ORDINATE CY (H)	WASTE CY (J)
0010	STA 200+00 EB TO STA 477+85 EB	EB LANES	1,333	130	1,203	1,564	2,033	1,410	710	710
	STA 200+00 WB TO STA 477+85 WB	WB LANES	914	130	784	912	1,186	549	277	277
	TOTALS		2,247	260	1,987	2,476	3,219	1,959	988	988

FILL EXPANSION FACTOR = 1.30
(D) UNUSABLE PAVEMENT IS INCLUDED IN THE EXCAVATION COMMON
(E) AVAILABLE MATERIAL = C - D
(G) EXPANDED FILL = F x 1.30
(H) MASS ORDINATE = C - G + I
(I) WASTE = C - G + I

REMOVING BUTT JOINTS

GROUP CODE	STATION	LOCATION	204.0105 REMOVING PAVEMENT BUTT JOINTS SY	204.0115 REMOVING ASPHALTIC SURFACE BUTT JOINTS SY	REMARKS
010	STA 200+00 EB TO STA 201+50 EB	EB	967	—	BEGIN PROJECT
	STA 217+15 EB TO STA 218+55 EB	RAMP	267	—	EB OFF RAMP
	STA 217+50 EB TO STA 218+00 EB	RT SHOULDER	56	167	BEAM GUARD END TREATMENT
	STA 223+90 EB TO STA 225+72 EB	EB	—	1133	B-13-98, USH 51
	STA 230+94 EB TO STA 232+94 EB	EB	—	1734	B-13-98, USH 51
	STA 238+40 EB TO STA 240+50 EB	RAMP	267	357	EB ON RAMP
	STA 249+25 EB TO STA 251+60 EB	LT SHOULDER	262	105	BEAM GUARD END TREATMENT
	STA 287+65 EB TO STA 289+74 EB	RT SHOULDER	233	—	BEAM GUARD END TREATMENT
	STA 351+40 EB TO STA 353+76 EB	LT SHOULDER	263	105	BEAM GUARD END TREATMENT
	STA 378+50 EB TO STA 381+15 EB	RAMP	745	100	EB OFF RAMP
	STA 385+00 EB TO STA 386+10 EB	RT SHOULDER	123	—	CRASH CUSHION
	STA 396+54 EB TO STA 398+04 EB	EB	934	—	B-13-102, USH 151
	STA 401+25 EB TO STA 402+75 EB	EB	934	—	B-13-102, USH 151
	STA 414+36 EB TO STA 416+70 EB	LT SHOULDER	260	104	BEAM GUARD END TREATMENT
	STA 416+07 EB TO STA 418+50 EB	RAMP	818	—	EB ON RAMP
	STA 417+00 EB TO STA 418+50 EB	RT SHOULDER	—	100	EB ON RAMP
	STA 423+68 EB TO STA 425+50 EB	RAMP & SHOULDER	267	339	EB ON RAMP
	STA 444+44 EB TO STA 445+94 EB	EB	—	1234	B-13-104, RAILROAD
	STA 448+00 EB TO STA 449+50 EB	EB	—	1167	B-13-104, RAILROAD
	STA 457+50 EB TO STA 459+00 EB	EB	967	429	B-13-541, LIEN ROAD
	STA 462+50 EB TO STA 464+00 EB	EB	967	450	B-13-541, LIEN ROAD
	STA 476+00 EB TO STA 477+85 EB	EB	1167	—	END PROJECT
	STA 200+00 WB TO STA 201+50 WB	WB	967	—	BEGIN PROJECT
	STA 216+50 WB TO STA 218+22 WB	RAMP	239	374	WB ON RAMP
	STA 223+90 WB TO STA 225+75 WB	WB	—	1500	B-13-99, USH 51
	STA 230+94 WB TO STA 232+94 WB	WB	—	1245	B-13-99, USH 51
	STA 238+10 WB TO STA 239+45 WB	RAMP	267	167	WB OFF RAMP
	STA 238+50 WB TO STA 239+00 WB	LT SHOULDER	56	—	BEAM GUARD END TREATMENT
	STA 249+46 WB TO STA 251+83 WB	RT SHOULDER	264	105	BEAM GUARD END TREATMENT
	STA 351+33 WB TO STA 353+69 WB	RT SHOULDER	263	105	BEAM GUARD END TREATMENT
	STA 373+50 WB TO STA 378+50 WB	LT RAMP	969	134	WB ON RAMP
	STA 396+44 WB TO STA 397+94 WB	WB	934	—	B-13-103, USH 151
	STA 400+94 WB TO STA 402+44 WB	WB	934	—	B-13-103, USH 151
	STA 413+80 WB TO STA 415+00 WB	LT SHOULDER	134	—	CRASH CUSHION
	STA 414+46 WB TO STA 416+82 WB	RT SHOULDER	263	105	BEAM GUARD END TREATMENT
	STA 424+76 WB TO STA 426+00 WB	LT SHOULDER	149	—	CRASH CUSHION
	STA 435+09 WB TO STA 437+00 WB	RAMP	756	117	WB OFF RAMP
	STA 444+10 WB TO STA 445+55 WB	WB	—	1193	B-13-105, RAILROAD
	STA 447+72 WB TO STA 449+22 WB	WB	—	1167	B-13-105, RAILROAD
	STA 457+50 WB TO STA 459+00 WB	WB	967	427	B-13-542, LIEN ROAD
	STA 463+00 WB TO STA 464+50 WB	WB	967	473	B-13-542, LIEN ROAD
	STA 476+35 WB TO STA 477+85 WB	WB	1167	—	END PROJECT
		TOTAL	18,793	14,636	

3

REMOVING PAVEMENT

GROUP CODE	STATION	LOCATION	204.0100 REMOVING PAVEMENT SY	204.0110 REMOVING ASPHALTIC SURFACE SY	SPV.0090.01 REMOVING HMA PAVEMENT TAPERED & NOTCHED LONGITUDINAL JOINTS MILLING LF
010	STA 200+00 EB TO STA 477+85 EB	EB & WB	—	—	441000
	STA 209+51 EB TO STA 215+21 EB	RT	377	404	—
	STA 241+66 WB TO STA 247+36 WB	LT	384	389	—
	STA 381+15 EB TO STA 385+00 EB	RT	—	362	—
	STA 378+50 WB TO STA 391+98 WB	LT	—	712	—
	STA 412+88 EB TO STA 416+07 EB	RT	—	223	—
	STA 415+00 WB TO STA 424+76 WB	LT	—	764	—
	STA 426+00 WB TO STA 435+09 WB	LT	—	700	—
		TOTAL	761	3,554	441,000

REMOVING CURB & GUTTER

GROUP CODE	STATION	LOCATION	204.0150 REMOVING CURB & GUTTER LF	REMARKS
010	STA 381+15 EB TO STA 385+00 EB	RT	410	INCLUDES 22' FOR MEDIAN SLOPED NOSE REMOVAL
	STA 378+50 WB TO STA 391+98 WB	LT	1,370	INCLUDES 20' FOR MEDIAN SLOPED NOSE REMOVAL
	STA 412+88 EB TO STA 416+07 EB	RT	350	INCLUDES 24' FOR MEDIAN SLOPED NOSE REMOVAL
	STA 415+00 WB TO STA 424+76 WB	LT	980	
	STA 417+00 EB TO STA 423+68 EB	RT	690	INCLUDES 22' FOR MEDIAN SLOPED NOSE REMOVAL
	STA 424+00 EB TO STA 437+17 EB	RT	1,320	
	STA 426+00 WB TO STA 435+09 WB	LT	930	INCLUDES 22' FOR MEDIAN SLOPED NOSE REMOVAL
		TOTAL	6,050	

REMOVING GUARDRAIL

GROUP CODE	STATION	LOCATION	204.0165 REMOVING GUARDRAIL LF
040	STA 291+43 WB TO STA 293+50 WB	LT	210
	STA 427+00 EB TO STA 446+32 EB	RT	1940
	STA 436+70 WB TO STA 445+68 WB	LT	900
	STA 447+30 WB TO STA 453+65 WB	LT	640
	STA 447+95 EB TO STA 453+50 EB	RT	560
		TOTAL	4,250

3

ADJUSTING INLET COVERS

GROUP CODE	STATION	LOCATION	611.8115 ADJUSTING INLET COVERS EACH
010	STA 203+10 EB	MEDIAN	1
	STA 203+09 WB	MEDIAN	1
	STA 209+91 EB & WB	MEDIAN	2
	STA 210+06 EB & WB	MEDIAN	2
	STA 211+27 EB	MEDIAN	1
	STA 211+26 WB	MEDIAN	1
	STA 216+50 EB	MEDIAN	1
	STA 216+48 WB	MEDIAN	1
	STA 239+67 WB	MEDIAN	1
	STA 243+74 WB	MEDIAN	1
	STA 247+70 WB	MEDIAN	1
	STA 252+17 WB	MEDIAN	1
	STA 255+30 WB	MEDIAN	1
	STA 266+26 WB	MEDIAN	1
	STA 271+10 WB	MEDIAN	1
	STA 276+10 EB&WB	MEDIAN	2
	STA 284+01 EB & WB	MEDIAN	2
	STA 292+04 EB & WB	MEDIAN	2
	STA 300+07 EB & WB	MEDIAN	2
	STA 305+25 EB & WB	MEDIAN	2
	STA 305+40 EB & WB	MEDIAN	2
	STA 329+84 EB & WB	MEDIAN	2
	STA 329+99 EB & WB	MEDIAN	2
	STA 336+12 EB & WB	MEDIAN	2
	STA 345+08 EB	MEDIAN	1
	STA 349+95 EB	MEDIAN	1
	STA 362+08 EB & WB	MEDIAN	2
	STA 371+58 EB & WB	MEDIAN	2
	STA 378+61 WB	LT SHOULDER	1
	STA 378+84 WB	LT SHOULDER	1
	STA 379+06 EB & WB	MEDIAN	2
	STA 379+07 WB	LT SHOULDER	1
	STA 381+28 EB	RT SHOULDER	1
	STA 381+55 EB	RT SHOULDER	1
	STA 381+79 EB	RT SHOULDER	1
	STA 382+00 WB	LT SHOULDER	1
	STA 384+98 EB	RT SHOULDER	1
	STA 385+00 WB	LT SHOULDER	1
	STA 387+65 EB & WB	MEDIAN	2
	STA 387+66 WB	LT SHOULDER	1
	STA 387+99 EB	RT SHOULDER	1
	STA 390+00 WB	LT SHOULDER	1
	STA 391+00 EB	RT SHOULDER	1
	STA 393+00 WB	LT SHOULDER	1
	STA 393+98 EB	RT SHOULDER	1
	STA 404+48 WB	LT SHOULDER	1
	STA 405+00 EB	RT SHOULDER	1
	STA 407+50 WB	MEDIAN	1
	STA 407+79 WB	LT SHOULDER	1
	STA 407+96 WB	LT SHOULDER	1
	STA 408+10 EB	RT SHOULDER	1
	STA 410+53 EB	RT SHOULDER	1
	STA 412+80 WB	LT SHOULDER	1
	STA 412+93 WB	MEDIAN	1
	STA 413+53 EB	RT SHOULDER	1
	STA 415+76 EB	RT SHOULDER	1
	STA 415+95 EB	RT SHOULDER	1
	STA 418+87 EB	RT RAMP	1
	STA 419+07 EB	RT RAMP	1
	STA 421+57 EB	RT RAMP	1
	STA 421+87 WB	LT SHOULDER	1
	STA 423+07 WB	MEDIAN	1
	STA 423+08 EB	RT RAMP	1
	STA 423+27 EB	RT RAMP	1
	STA 423+57 EB	RT RAMP	1
	STA 424+56 WB	LT SHOULDER	1
	STA 426+45 EB	RT RAMP	1
	STA 426+66 EB	RT RAMP	1
	STA 427+70 WB	LT SHOULDER	1
	STA 428+46 EB	RT RAMP	1

CONTINUED

ADJUSTING INLET COVERS, CONTINUED

GROUP CODE	STATION	LOCATION	611.8115 ADJUSTING INLET COVERS EACH
	STA 428+64 EB	RT RAMP	1
	STA 429+70 WB	LT SHOULDER	1
	STA 430+50 WB	LT SHOULDER	1
	STA 430+68 WB	LT SHOULDER	1
	STA 430+85 EB	RT RAMP	1
	STA 430+90 EB & WB	MEDIAN	2
	STA 431+05 EB & WB	MEDIAN	2
	STA 431+06 EB	RT RAMP	1
	STA 431+20 WB	LT SHOULDER	1
	STA 432+67 EB	RT RAMP	1
	STA 432+80 WB	LT SHOULDER	1
	STA 432+93 EB	RT RAMP	1
	STA 433+16 EB	RT RAMP	1
	STA 433+27 EB	MEDIAN	1
	STA 434+56 EB	RT RAMP	1
	STA 434+56 EB & WB	MEDIAN	2
	STA 436+75 EB	RT RAMP	1
	STA 439+39 EB & WB	MEDIAN	2
	STA 455+06 EB & WB	MEDIAN	2
	STA 474+57 EB & WB	MEDIAN	2
		TOTAL	111

DELINEATORS

GROUP CODE	STATION	LOCATION	204.9060.S REMOVING DELINEATORS EACH	633.0100 DELINEATOR POSTS STEEL EACH	633.0500 DELINEATOR REFLECTORS WHITE EACH	633.0500 DELINEATOR REFLECTORS YELLOW EACH	633.1000 DELINEATOR BRACKETS EACH
010	200+00 EB to 477+85 EB	EB & WB	170	223	336	280	305
		TOTAL	170	223	336	280	305

BASE MATERIAL

GROUP CODE	STATION	LOCATION	305.0110 BASE AGGREGATE DENSE 3/4-INCH TON	305.0120 BASE AGGREGATE DENSE 1 1/4-INCH TON	312.0110 SELECT CRUSHED MATERIAL TON	REMARKS
010	STA 200+00 EB TO STA 477+85 EB	RT	4,250	---	—	
	STA 200+00 WB TO STA 477+85 WB	LT	4,100	---	—	
	STA 209+51 EB TO STA 215+21 EB	RT	—	900	550	
	STA 241+66 WB TO STA 247+36 WB	LT	—	890	550	
	STA 378+50 EB TO STA 435+09 EB	EB & WB	250	---	—	CURB & GUTTER
	STA 378+56 EB TO STA 435+00 EB	EB & WB	10	---	—	CONCRETE MEDIAN SLOPED NOSE
	STA 381+15 EB TO STA 435+09 EB	EB & WB	350	---	—	ASPHALTIC SURFACE SAFETY ISLANDS
		TOTAL	8,960	1,790	1,100	

3

CONCRETE PAVEMENT REPAIR

GROUP CODE	STATION	LOCATION	SPV.0180.02 CONTINUOUSLY REINFORCED CONCRETE PAVEMENT SHES REPAIR SY	390.0403 BASE PATCHING CONCRETE SHES SY	416.0610* DRILLED TIE BARS EACH	416.062 DRILLED DOWEL BARS EACH	SPV.0180.01 MILLING & ASPHALT FILL CRACK TREATMENT SY
010	STA 200+00 EB TO STA 477+85 EB	EB & WB	1,250	110	380	160	200
		TOTAL	1,250	110	380	160	200

* ADDIDTIONAL QUANTITIES LISTED ELSEWHERE

ASPHALT PAVING ITEMS

GROUP CODE	STATION	LOCATION	465.0305 ASPHALTIC SURFACE SAFETY ISLANDS TON	465.0400 ASPHALTIC SHOULDER RUMBLE STRIP LF	495.0100.S WARRANTED HMA PAVEMENT OVERLAY MAINLINE TON	495.0200.S WARRANTED HMA PAVEMENT OVERLAY ANCILLARY TON	REMARKS
010	STA 200+00 EB TO STA 477+85 EB	EB LANES & SHOULDERS	—	—	34,800	—	
	STA 200+00 WB TO STA 477+85 WB	WB LANES & SHOULDERS	—	—	34,200	—	
	STA 209+51 EB TO STA 445+94 EB	RAMPS	—	—	—	3600	
	STA 201+20 WB TO STA 443+25 WB	RAMPS	—	—	—	3,100	
	STA 200+00 EB TO STA 477+85 EB	EB & WB	—	97,700	—	—	
	STA 381+15 EB TO STA 385+00 EB	RT	60	—	—	—	
	STA 378+50 WB TO STA 391+98 WB	LT	120	—	—	—	
	STA 412+88 EB TO STA 416+07 EB	RT	35	—	—	—	
	STA 415+00 WB TO STA 424+76 WB	LT	125	—	—	—	
	STA 426+00 WB TO STA 435+09 WB	LT	115	—	—	—	
	TOTAL		455	97,700	69,000	6,700	

CONCRETE ITEMS

GROUP CODE	STATION	LOCATION	416.0610* DRILLED TIE BARS EACH	601.0553 CONCRETE CURB & GUTTER 4-INCH SLOPED 36-INCH TYPE D LF	620.0300 CONCRETE MEDIAN SLOPED NOSE SF	SPV.0090.02 CONCRETE CURB & GUTTER 4-INCH SLOPED 36-INCH TYPE A SPECIAL LF	603.8000 CONCRETE BARRIER TEMPORARY PRECAST DELIVERED LF	603.8125 CONCRETE BARRIER TEMPORARY PRECAST INSTALLED LF
010	STA 378+50 WB TO STA 391+98 WB	LT	450	—	—	1,350	—	—
	STA 381+15 EB TO STA 385+00 EB	RT	129	—	—	390	—	—
	STA 412+88 EB TO STA 416+07 EB	RT	107	—	—	320	—	—
	STA 415+00 WB TO STA 424+76 WB	LT	325	—	—	980	—	—
	STA 417+00 EB TO STA 423+68 EB	RT	—	670	—	—	—	—
	STA 424+00 EB TO STA 437+17 EB	RT	—	1,320	—	—	—	—
	STA 426+00 WB TO STA 435+09 WB	LT	303	—	—	910	—	—
	STA 378+56 WB	LT	5	—	55	—	—	—
	STA 381+22 EB	RT	5	—	65	—	—	—
	STA 416+01 EB	RT	5	—	75	—	—	—
	STA 423+61EB	RT	5	—	70	—	—	—
	STA 435+00 WB	LT	5	—	70	—	—	—
	STA 427+00 EB	RT	—	—	—	—	1,150	1,150
		TOTAL	1,339	1,990	335	3,950	1,150	1,150

*ADDITIONAL QUANTITIES LISTED ELSEWHERE

3

3

BEAMGUARD

GROUP CODE	STATION	LOCATION	614.0400 ADJUSTING STEEL PLATE BEAM GUARD LF	614.2300 MGS GUARDRAIL 3 LF	614.2500 MGS THRIE BEAM TRANSITION LF	614.2610 MGS GUARDRAIL TERMINAL EAT EACH	614.2620 MGS GUARDRAIL TERMINAL TYPE 2 EACH	SPV.0060.05 MARKER POSTS FLEXIBLE FOR GUARDRAIL TERMINAL EACH
010	STA 201+90 WB TO STA 211+43 WB	LT	---	900	—	1	1	1
	STA 213+80 EB TO STA 216+08 EB	RT	---	175	—	1	1	1
	STA 218+25 WB TO STA 225+57 WB	LT	734	—	—	—	—	---
	STA 218+00 WB TO STA 220+80 EB	RT	280	—	—	—	—	---
	STA 230+94 EB TO STA 238+40 EB	RT	746	—	—	—	—	---
	STA 236+20 WB TO STA 238+50 WB	LT	230	—	—	—	—	---
	STA 245+47 EB TO STA 247+72 EB	RT	---	225	—	1	1	1
	STA 273+87 EB TO STA 276+15 EB	RT	---	175	—	1	1	1
	STA 291+43 WB TO STA 331+23 WB	LT	---	3887.5	39.4	1	—	1
	STA 303+93 EB TO STA 331+71 EB	RT	---	2725	—	1	1	1
	STA 334+16 EB TO STA 336+19 EB	RT	---	150	—	1	1	1
	STA 340+94 EB TO STA 349+10 EB	RT	---	762.5	—	1	1	1
	STA 344+97 WB TO STA 356+50 WB	LT	---	1100	—	1	1	1
	STA 362+05 WB TO STA 364+33 WB	LT	---	175	—	1	1	1
	STA 369+02 EB TO STA 375+05 EB	RT	---	550	—	1	1	1
	STA 371+50 WB TO STA 372+00 WB	LT	---	50	—	—	1	---
	STA 372+00 WB TO STA 375+00 WB	LT	300	—	—	—	—	---
	STA 426+90 EB TO STA 446+32 EB	RT	---	1850	39.4	1	—	1
	STA 447+95 EB TO STA 453+60 EB	RT	---	525	39.4	—	1	---
	STA 436+63 WB TO STA 445+68 WB	LT	---	812.5	39.4	—	1	---
	STA 447+30 WB TO STA 453+73 WB	LT	---	550	39.4	1	—	1
	STA 453+50 EB TO STA 459+00 EB	RT	550	—	—	—	—	---
	STA 453+65 WB TO STA 459+00 WB	LT	535	—	—	—	—	---
		TOTAL	3375	14612.5	197	13	13	13

EROSION CONTROL ITEMS

GROUP CODE	STATION	LOCATION	628.1504 SILT FENCE LF	628.1520 SILT FENCE MAINTENANCE LF	628.1905 MOBILIZATIONS EROSION CONTROL EA	628.1910 MOBILIZATIONS EMERGENCY EROSION CONTROL EA	628.2004 EROSION MAT CLASS I TYPE B SY	628.7504 TEMPORARY DITCH CHECKS LF
010	STA 200+00 EB TO STA 477+85 EB	EB & WB	885	885	8	6	11,420	—
*	STA 215+00 EB TO STA 344+25 EB	WETLAND PROTECTION	4,120	4,120	—	---	—	—
*	STA 199+80 WB TO STA 475+30 WB	WETLAND PROTECTION	8,645	8,645	—	---	—	—
	UNDISTRIBUTED		250	250	—	---	2810	24
		TOTAL	13,900	13,900	8	6	14,230	24

* SEE EROSION CONTROL PLAN SHEETS FOR SPECIFIC LOCATIONS OF SILT FENCE FOR WETLAND PROTECTION

FINISHING ITEMS

GROUP CODE	STATION	LOCATION	624.0100 WATER MGAL	625.0500 SALVAGED TOPSOIL SY	627.0200 MULCHING SY	629.0210 FERTILIZER TYPE B CWT	630.0130 SEEDING MIXTURE NO. 30 LB	630.0200 SEEDING TEMPORARY LB
010	200+00 EB to 477+85 EB	RT	35	12,700	12,700	15	430	640
	200+00 WB to 477+85 WB	LT	30	10,700	10,700	13	360	530
	UNDISTRIBUTED		---	4,700	4,700	6	160	230
		TOTAL	65	28,100	28,100	34	950	1,400

3

PERMANENT TYPE I SIGNS

GROUP CODE	STATION	LOCATION	NUMBER ON PLAN	SIZE SIGN IN X IN	SIGN PLATE NUMBER	635.0200 * SIGN SUPPORTS STRUCTURAL STEEL HS LB	POST TYPE	636.0100 * SIGN SUPPORTS CONCRETE MASONRY CY	636.0500 * SIGN SUPPORTS STEEL REINFORCEMENT LB	637.0101 SIGNS TYPE I SF	638.2601 REMOVING SIGNS TYPE I EACH	638.3100 REMOVING STRUCTURAL STEEL SIGN SUPPORTS EACH	REMARKS
010	210+00 EB	RT	1-4	120 x 30	E1-5	---	---	—	—	25	1	—	
	210+00 EB	RT	1-5	204 x 132	E4-1A	---	---	—	—	187	1	—	
	247+35 WB	LT	3-1	120 x 30	E1-5	---	---	—	—	25	1	—	
	247+35 WB	LT	3-2	204 x 132	E4-1A	---	---	—	—	187	1	—	
	263+15 WB	LT	3-15	168 x 84	E3-1	---	---	—	—	98	1	—	
	280+00 EB	RT	4-1	192 x 60	D2-2	455	A	1.2	68	80	---	—	
	330+60 EB	RT	5-7	168 x 30	E1-5	---	---	—	—	35	1	—	
	330+60 EB	RT	5-8	216 x 162	E1-1A	---	---	—	—	243	1	—	
	341+10 WB	LT	6-1	120 x 30	E1-5	---	---	—	—	25	1	—	INSTALL AT 343+50 WB
	341+10 WB	LT	6-2	168 x 162	E1-1A	1,093	B	1.6	98	189	1	2	INSTALL AT 343+50 WB
	355+50 WB	LT	6-11	---	---	---	---	—	—	—	1	2	
	369+10 EB	RT	7-3	168 x 30	E1-5	---	---	—	—	35	1	—	INSTALL AT 372+00 EB
	369+10 EB	RT	7-4	252 x 132	E4-1A	1,058	B	1.6	98	231	1	2	INSTALL AT 372+00 EB
	411+15 EB	RT	8-6	144 x 48	E1-5	---	---	—	—	48	1	—	
	431+90 EB	LT	9-3	240 x 108	E8-1	---	---	—	—	180	1	—	
	439+30 WB	LT	9-5	336 x 126	E6-51	---	---	—	—	294	1	—	
	439+30 WB	LT	9-6	180 x 30	E1-5	---	---	—	—	37.5	1	—	
	439+30 WB	LT	9-7	180 x 174	E6-51	---	---	—	—	217.5	1	—	
	462+45 EB	RT	10-1	144 x 48	E1-5	---	---	—	—	48	1	—	
					TOTAL	2,606		4.4	264	2,185	18	6	

* ADDITIONAL QUANTITIES LISTED ELSEWHERE

3

3

MAINLINE PERMANENT TYPE II SIGNS

GROUP CODE	STATION	LOCATION	NUMBER ON PLAN	SIZE SIGN IN X IN	SIGN PLATE NUMBER	634.0614 POSTS WOOD 4X6-INCH X 14-FT EACH	634.0616 * POSTS WOOD 4X6-INCH X 16-FT EACH	634.0618 * POSTS WOOD 4X6-INCH X 18-FT EACH	634.0620 * POSTS WOOD 4X6-INCH X 20-FT EACH	637.0202 SIGNS REFLECTIVE TYPE II SF	638.2602 * REMOVING SIGNS TYPE II EACH	638.3000 * REMOVING SMALL SIGN SUPPORTS EACH	REMARKS
010	204+60 EB	RT	1-1	48 x 36	R7-8	---	1	---	---	12	1	1	
	207+00 EB	LT	1-2	21 x 60	D10-5	1	---	---	---	8.75	1	1	
	207+00 WB	RT	1-3	21 x 60	D10-5	---	---	---	---	8.75	1	---	
	212+25 EB	RT	1-6	48 x 60	W13-3	---	---	2	---	20	1	1	
	218+00 EB	RT	2-1	90 x 60	E5-1A	---	---	---	2	37.5	1	2	
	218+00 EB	LT	2-2	21 x 60	D10-5	1	---	---	---	8.75	1	1	
	218+00 WB	RT	2-3	21 x 60	D10-5	---	---	---	---	8.75	1	---	
	238+80 WB	LT	2-4	90 x 60	E5-1A	---	---	---	2	37.5	2	2	
	238+80 WB	LT	2-5	36 x 54	J4-1	---	---	---	---	13.5	2	---	
	239+00 EB	LT	2-6	21 x 60	D10-5	1	---	---	---	8.75	1	1	
	239+00 WB	RT	2-7	21 x 60	D10-5	1	---	---	---	8.75	1	1	
	242+40 WB	LT	2-8	48 x 60	W13-3	---	---	2	---	20	1	1	
	249+00 EB	LT	3-3	21 x 60	D10-5	1	---	---	---	8.75	1	1	
	249+10 WB	RT	3-4	21 x 60	D10-5	1	---	---	---	8.75	1	1	
	250+20 EB	LT	3-5	36 x 48	R3-4B	---	---	1	---	12	2	1	
	251+00 WB	RT	3-6	36 x 48	R3-4B	---	---	1	---	12	2	1	
	252+05 WB	LT	3-7	48 x 36	R7-8	---	1	---	---	12	1	1	
	254+00 EB	LT	3-8	---	---	---	---	---	---	---	1	2	
	254+30 WB	RT	3-9	---	---	---	---	---	---	---	1	---	
	256+00 EB	RT	3-10	108 x 51	J4-3	---	---	1	1	38.25	4	2	
	259+10 EB	LT	3-11	21 x 60	D10-5	1	---	---	---	8.75	1	1	
	259+10 WB	RT	3-12	21 x 60	D10-5	---	---	---	---	8.75	1	---	
	260+50 EB	RT	3-13	---	---	---	---	---	---	---	1	3	
	260+50 EB	RT	3-14	---	---	---	1	---	---	---	---	---	INSTALL AT 256+00 EB
	265+95 EB	RT	3-16	48 x 60	R2-1	---	---	2	---	20	1	2	
	270+50 EB	LT	3-17	21 x 60	D10-5	1	---	---	---	8.75	1	1	
	270+50 WB	RT	3-18	21 x 60	D10-5	---	---	---	---	8.75	1	---	
	281+00 EB	LT	4-2	21 x 60	D10-5	1	---	---	---	8.75	1	1	
	281+00 WB	RT	4-3	21 x 60	D10-5	---	---	---	---	8.75	1	---	
	292+00 EB	LT	4-4	21 x 60	D10-5	1	---	---	---	8.75	1	1	
	292+00 WB	RT	4-5	21 x 60	D10-5	---	---	---	---	8.75	1	---	
	302+00 EB	LT	4-6	21 x 60	D10-5	1	---	---	---	8.75	1	1	
	302+00 WB	RT	4-7	21 x 60	D10-5	---	---	---	---	8.75	1	---	
	312+50 EB	LT	5-1	21 x 60	D10-5	1	---	---	---	8.75	1	1	
	312+50 WB	RT	5-2	21 x 60	D10-5	---	---	---	---	8.75	1	---	
	315+50 EB	RT	5-3	48 x 60	R2-1	---	---	2	---	20	1	2	
	323+65 EB	LT	5-4	21 x 60	D10-5	1	---	---	---	8.75	1	1	
	323+65 WB	RT	5-5	21 x 60	D10-5	---	---	---	---	8.75	1	---	
	325+60 EB	RT	5-6	72 x 30	I2-3A	---	---	2	---	15	1	1	
	334+10 EB	LT	5-9	21 x 60	D10-5	1	---	---	---	8.75	1	1	
	334+10 WB	RT	5-10	21 x 60	D10-5	---	---	---	---	8.75	1	---	
	344+00 WB	LT	6-3	48 x 60	R2-1	---	---	2	---	20	1	1	INSTALL AT 340+00 WB
	344+85 EB	LT	6-4	21 x 60	D10-5	1	---	---	---	8.75	1	1	
	344+85 WB	RT	6-5	21 x 60	D10-5	---	---	---	---	8.75	1	---	
	350+80 WB	LT	6-6	108 x 51	J4-3	---	---	1	1	38.25	4	2	
	352+10 EB	LT	6-7	36 x 48	R3-4B	---	---	1	---	12	1	1	
	353+00 WB	RT	6-8	36 x 48	R3-4B	---	---	1	---	12	1	1	
	355+00 EB	LT	6-9	21 x 60	D10-5	1	---	---	---	8.75	1	1	
	355+00 WB	RT	6-10	21 x 60	D10-5	---	---	---	---	8.75	1	---	
	365+50 EB	LT	7-1	21 x 60	D10-5	1	---	---	---	8.75	1	1	
	365+50 WB	RT	7-2	21 x 60	D10-5	---	---	---	---	8.75	1	---	
	375+70 EB	LT	7-5	21 x 60	D10-5	1	---	---	---	8.75	1	1	
	375+70 WB	RT	7-6	21 x 60	D10-5	---	---	---	---	8.75	1	---	
	380+00 EB	RT	7-7	48 x 60	W13-3	---	---	2	---	20	1	2	
	380+40 WB	LT	7-8	48 x 48	W4-1	---	---	1	---	16	1	1	
	382+00 EB	RT	7-9	42 x 84	E5-1A (MOD)	---	---	---	2	24.5	1	2	
	386+35 EB	LT	7-10	21 x 60	D10-5	1	---	---	---	8.75	1	1	
	386+35 WB	RT	7-11	21 x 60	D10-5	---	---	---	---	8.75	1	---	
	397+95 EB	LT	8-1	21 x 60	D10-5	1	---	---	---	8.75	1	1	
	397+95 WB	RT	8-2	21 x 60	D10-5	---	---	---	---	8.75	1	---	
	408+60 EB	LT	8-3	21 x 60	D10-5	1	---	---	---	8.75	1	1	
	408+60 WB	RT	8-4	21 x 60	D10-5	---	---	---	---	8.75	1	---	
	411+00 EB	RT	8-5	48 x 48	W4-3	---	---	1	---	16	1	1	
	415+25 EB	LT	8-7	36 x 48	R3-4B	---	---	1	---	12	2	1	
	415+75 WB	RT	8-8	36 x 48	R3-4B	---	---	1	---	12	2	1	
	418+45 EB	LT	8-9	21 x 60	D10-5	1	---	---	---	8.75	1	1	
	418+45 WB	RT	8-10	21 x 60	D10-5	1	---	---	---	8.75	1	---	
	419+20 EB	RT	8-11	48 x 48	W4-1	---	---	2	---	16	1	1	
	429+00 EB	LT	9-1	21 x 60	D10-5	1	---	---	---	8.75	1	1	
	429+00 WB	RT	9-2	21 x 60	D10-5	---	---	---	---	8.75	1	---	
	434+00 WB	LT	9-4	42 x 84	E5-1A (MOD)	---	---	---	2	24.5	1	2	
	439+45 EB	LT	9-8	21 x 60	D10-5	1	---	---	---	8.75	1	1	
	439+45 WB	RT	9-9	21 x 60	D10-5	---	---	---	---	8.75	1	---	
	479+70 EB	RT	10-3	48 x 60	R2-1	---	---	2	---	20	1	1	
					TOTAL	25	3	28	10	898	85	63	

* ADDITIONAL QUANTITIES LISTEDE ELSEWHERE

3

ALTERNATE ROUTE IH39/94 PERMANENT TYPE II SIGNS

GROUP CODE	HIGHWAY	LOCATION	NUMBER ON PLANS	SIGN PLATE NUMBER	SIZE SIGN IN X IN	634.0616 ** POSTS WOOD 4X6-INCH X 16-FT EACH	634.0618 ** POSTS WOOD 4X6-INCH X 18-FT EACH	634.0620 ** POSTS WOOD 4X6-INCH X 20-FT EACH	634.0622 POSTS WOOD 4X6-INCH X 22-FT EACH	638.2602 ** REMOVING SIGNS TYPE II EACH	638.3000 ** REMOVING SMALL SIGN SUPPORTS EACH	638.3620 ERECTING STATE OWNED SIGNS TYPE II EACH	REMARKS
010	SB IH 39	Exit 132 Gore	101R	---	---	---	---	---	---	1	---	---	Mounted on "Exit 132" Sign Post
	SB IH 39	Exit 132 Gore	102	JV-F	36" x 54"	---	---	---	---	---	---	1	Mount on "Exit 132" Sign Post
	SB IH 39	Exit 132 Gore	103	JV-F	36" x 54"	---	---	---	---	---	---	1	Mount on "Exit 132" Sign Post
	SB IH 39	Exit 132 Off Ramp	104R	---	---	---	---	---	---	1	1	---	
	SB IH 39	Exit 132 Off Ramp	105	J3-1	36" x 120"	---	---	---	1	---	---	4	
	SB USH 51	South of Off Ramp	106R	---	---	---	---	---	---	1	1	---	
	SB USH 51	South of Off Ramp	107R	---	---	---	---	---	---	1	---	---	Mounted with 106R
	SB USH 51	South of Off Ramp	108	J2-1	36" x 126"	---	---	---	1	---	---	4	
	SB USH 51	Median, South of Off Ramp	109R	---	---	---	---	---	---	1	1	---	
	SB USH 51	Median, South of Off Ramp	110R	---	---	---	---	---	---	1	---	---	
	SB USH 51	Median, South of Off Ramp	111	J2-1	36" x 126"	---	---	---	1	---	---	4	
	NB USH 51	North of Anderson Road	112R	---	---	---	---	---	---	1	1	---	
	SB USH 51	Median, South of CTH CV	113	J4-1	36" x 90"	---	---	1	---	---	---	1	
	SB USH 51	Median, South of CTH CV	114R	---	---	---	---	---	---	1	1	---	
	SB USH 51	South of CTH CV	115R	---	---	---	---	---	---	1	1	---	
	SB USH 51	South of CTH CV	116	J4-1	36" x 54"	1	---	---	---	---	---	1	
	SB USH 51	South of CTH CV	117R	---	---	---	---	---	---	1	1	---	
	SB USH 51	South of CTH CV	118	J4-1	36" x 90"	---	---	1	---	---	---	1	
	NB USH 51	South of Anderson Road	119	J3-1	36" x 120"	---	---	---	1	---	---	4	
	NB USH 51	Median, South of Anderson Road	120	J3-1	36" x 120"	---	---	---	1	---	---	4	
	NB USH 51	Across from Acker Road	121R	---	---	---	---	---	---	1	1	---	
	NB USH 51	Median, South of Hoepker Road	122	J3-1	36" x 120"	---	---	---	1	---	---	4	
	NB USH 51	South of Hoepker Road	123	J3-1	36" x 120"	---	---	---	1	---	---	4	
	SB USH 51	Median, South of Hanson Road	124R	---	---	---	---	---	---	1	1	---	
	SB USH 51	Median, South of Hanson Road	125	J4-1	36" x 90"	---	---	1	---	---	---	1	
	SB USH 51	South of Hanson Road	126R	---	---	---	---	---	---	1	1	---	
	SB USH 51	South of Hanson Road	127	J4-1	36" x 90"	---	---	1	---	---	---	3	
	NB USH 51	Median,North of Rieder Road	201R	---	---	---	---	---	---	1	1	---	
	NB USH 51	Median,North of Rieder Road	202	J4-1	36" x 90"	---	---	1	---	---	---	3	
	NB USH 51	North of Rieder Road	203R	---	---	---	---	---	---	1	1	---	
	NB USH 51	North of Rieder Road	204	J4-1	36" x 90"	---	---	1	---	---	---	3	
	SB USH 51	South of Kinsman Blvd	205	J4-1	36" x 90"	---	---	1	---	---	---	3	
	SB USH 51	South of Kinsman Blvd	206R	---	---	---	---	---	---	1	1	---	
	SB USH 51	Median, South of Kinsman Blvd	207R	---	---	---	---	---	---	1	1	---	
	SB USH 51	Median, South of Kinsman Blvd	208	J4-1	36" x 90"	---	---	1	---	---	---	3	
	SB USH 51	South of Anderson Street	209	J3-1	36" x 120"	---	---	---	1	---	---	4	
	SB USH 51	South of Anderson Street	210R	---	---	---	---	---	---	1	1	---	
	NB USH 51	South of Anderson Street	211R	---	---	---	---	---	---	1	1	---	
	NB USH 51	South of Anderson Street	212	J4-1	36" x 90"	---	---	1	---	---	---	3	
	NB USH 51	Median, South of Anderson Str	213R	---	---	---	---	---	---	1	1	---	
	NB USH 51	Median, South of Anderson Str	214	J4-1	36" x 90"	---	---	1	---	---	---	3	
	SB USH 51	Median, South of E. Washington Ave	215	J4-1	36" x 90"	---	---	1	---	---	---	3	
	SB USH 51	Median, South of E. Washington Ave	216R	---	---	---	---	---	---	1	1	---	
	SB USH 51	South of E. Washington Ave	217R	---	---	---	---	---	---	1	1	---	
	SB USH 51	South of E. Washington Ave	218	J4-1	36" x 90"	---	---	1	---	---	---	3	
	NB USH 51	South of E. Washington Ave	219	J3-1	36" x 120"	---	---	---	1	---	---	4	
	NB USH 51	Median, South of E. Washington Ave	220	J3-1	36" x 120"	---	---	---	1	---	---	4	
	NB USH 51	South of E. Washington Avenue	221R	---	---	---	---	---	---	1	1	---	
	NB USH 51	South of E. Washington Avenue	222	J2-1	36" x 126"	---	---	---	1	---	---	4	
	NB USH 51	Median, South of E. Washington Ave	223R	---	---	---	---	---	---	1	1	---	
	NB USH 51	Median, South of E. Washington Ave	224	J2-1	36" x 126"	---	---	---	1	---	---	4	
	NB USH 51	North of STH 30	301R	---	---	---	---	---	---	1	1	---	
	NB USH 51	Median, North of STH 30	302R	---	---	---	---	---	---	1	1	---	
	SB USH 51	South of STH 30	303R	---	---	---	---	---	---	1	1	---	
	EB STH 30	East of USH 51	304R	---	---	---	---	---	---	1	1	---	
	EB STH 30	East of USH 51	305R	---	---	---	---	---	---	1	---	---	Mounted on Light Pole
	EB STH 30	East of USH 51	306R	---	---	---	---	---	---	1	---	---	Mounted with 304R
	WB STH 30	East of USH 51	307R	---	---	---	---	---	---	1	---	---	Mnted on Overhead Cantaliver Support
	WB STH 30	East of USH 51	308R	---	---	---	---	---	---	1	---	---	Mnted on Overhead Cantaliver Support
	WB STH 30	East of USH 51	309R	---	---	---	---	---	---	1	---	---	Mounted with 307R
	WB STH 30	Median, East of USH 51	310R	---	---	---	---	---	---	1	1	---	Mnted on Overhead Cantaliver Support
	WB STH 30	Median, East of USH 51	311R	---	---	---	---	---	---	1	---	---	Mounted with 307R
	EB STH 30	West of IH 39/90 Intersection	312R	---	---	---	---	---	---	1	1	---	
	WB STH 30	STH 30, IH 39/90 Intersection	313R	---	---	---	---	---	---	1	1	---	
	WB STH 30	Median, STH 30, IH 39/90 Intersec.	314R	---	---	---	---	---	---	1	1	---	
	WB IH 94	Median, West of Sprecher Road	315R	---	---	---	---	---	---	1	1	---	
	WB IH 94	West of Sprecher Road	316R	---	---	---	---	---	---	1	1	---	
	NB IH 39	Exit 138B Gore	317R	---	---	---	---	---	---	1	---	---	Mounted on "Exit 138B" Sign Post
	SB IH 39	EXIT 138B Gore	318R	---	---	---	---	---	---	1	---	---	Mounted on "Exit 138B" Sign Post
	SB USH 51	North of STH 30	401	JV-F	36" x 84"	---	---	1	---	---	---	1	
	SB USH 51	North of STH 30	402	J2-1	36" x 84"	---	---	1	---	---	---	3	
	SB USH 51	Median, North of STH 30	403	JV-F	36" x 84"	---	---	1	---	---	---	1	
	SB USH 51	Median, North of STH 30	404	J2-1	36" x 84"	---	1	---	---	---	---	3	
	NB USH 51	North of STH 30	405	J4-1	36" x 90"	---	---	1	---	---	---	3	
	NB USH 51	Median, North of STH 30	406	J4-1	36" x 90"	---	---	1	---	---	---	3	
	SB USH 51	Median, South of STH 30	407	JV-F	36" x 84"	---	---	1	---	---	---	1	In Concrete Median
	SB USH 51	Median, South of STH 30	408	J3-1	36" x 84"	---	1	---	---	---	---	3	
	NB USH 51	South of STH 30	409	JV-F	36" x 84"	---	---	---	---	---	---	1	Mount to Light Pole
	SB USH 51	South of STH 30	410	J4-1	36" x 54"	1	---	---	---	---	---	1	

CONTINUED ON NEXT PAGE

ALTERNATE ROUTE IH39/94 PERMANENT TYPE II SIGNS, CONTINUED

GROUP CODE	HIGHWAY	LOCATION	NUMBER ON PLANS	SIGN PLATE NUMBER	SIZE SIGN IN X IN	634.0616 ** POSTS WOOD 4X6-INCH X 16-FT EACH	634.0618 ** POSTS WOOD 4X6-INCH X 18-FT EACH	634.0620 ** POSTS WOOD 4X6-INCH X 20-FT EACH	634.0622 POSTS WOOD 4X6-INCH X 22-FT EACH	638.2602 ** REMOVING SIGNS TYPE II EACH	638.3000 ** REMOVING SMALL SIGN SUPPORTS EACH	638.3620 ERECTING STATE OWNED SIGNS TYPE II EACH	REMARKS
010	NB USH 51	Median, North of Milwaukee Str	411	JV-F	36" x 84"	--	--	--	--	--	--	1	Mount to Light Pole
	NB USH 51	North of Milwaukee Str	412	JV-F	36" x 84"	--	--	--	--	--	--	1	Mount to Light Pole
	NB USH 51	Median, South of Milwaukee Str	413	J3-1	36" x 84"	--	1	--	--	--	--	1	
	NB USH 51	South of Milwaukee Str	414	J3-1	36" x 84"	--	1	--	--	--	--	1	
	WB STH 30	Off Ramp, Intersection with USH 51	415	J3-3	108" x 102"	--	--	2	--	--	--	2	In Concrete Median
	EB STH 30	On Ramp, East of USH 51	416	J4-1	36" x 90"	--	--	1	--	--	--	1	
	WB STH 30	Off Ramp, Intersection with USH 51	417	J2-3	108" x 102"	--	--	--	2	--	--	2	
	EB STH 30	Median, At End of On Ramp	418	J2-1	36" x 126"	--	--	--	1	--	--	1	
	EB STH 30	End of On Ramp	419	J2-1	36" x 126"	--	--	--	--	--	--	1	Mount to Light Pole
	WB STH 30	East of USH 51	420	J3-1	36" x 120"	--	--	--	--	--	--	1	Mnt on Overhead Cantaliver Support
	WB STH 30	East of USH 51	421	J2-1	36" x 120"	--	--	--	--	--	--	1	Mnt on Overhead Cantaliver Support
	WB STH 30	IH 39/90/94 Intersection	422	J4-1	36" x 90"	--	--	1	--	--	--	3	
	WB STH 30	Median, IH 39/90/94 Intersection	423	J4-1	36" x 90"	--	--	1	--	--	--	3	
	WB STH 30	Gore of SB IH 39 On Ramp	424	J3-1	36" x 120"	--	--	--	1	--	--	1	
	WB STH 30	Gore of NB IH 39, WB IH 94, On Ramp	425	J3-1	36" x 84"	--	--	1	--	--	--	2	
	NB IH 39	Exit 138B Gore	426	JV-F	36" x 54"	--	--	--	--	--	--	1	Mount on Exit 138B Sign Post
	NB IH 39	Exit 138B Gore	427	JV-F	36" x 54"	--	--	--	--	--	--	1	Mount on Exit 138B Sign Post
	SB IH 39	Exit 138B Gore	428	JV-F	36" x 54"	--	--	--	--	--	--	1	Mount on Exit 138B Sign Post
	NB USH 51	Median, North of Cottage Grove Rd	501	J3-1	36" x 84"	--	1	--	--	--	--	1	
	NB USH 51	North of Cottage Grove Rd	502	J3-1	36" x 84"	--	--	1	--	--	--	1	
	SB USH 51	Median, South of Cottage Grove Rd	503	J3-1	36" x 84"	--	1	--	--	--	--	1	
	SB USH 51	South of Cottage Grove Rd	504	J3-1	36" x 84"	--	--	1	--	--	--	1	
	SB USH 51	Median, North of East Buckeye Rd	505	J3-1	36" x 84"	--	1	--	--	--	--	1	
	SB USH 51	North of East Buckeye Rd	506	J3-1	36" x 84"	--	--	1	--	--	--	1	
	NB USH 51	Median, North of East Buckeye Rd	507R	--	--	--	--	--	--	1	1	--	
	NB USH 51	Median, North of East Buckeye Rd	508	J4-1	36" x 54"	--	1	--	--	--	--	1	
	NB USH 51	Median, North of East Buckeye Rd	509R	--	--	--	--	--	--	1	1	--	
	NB USH 51	Median, North of East Buckeye Rd	510	J4-1	36" x 54"	--	1	--	--	--	--	1	
	SB USH 51	Median, South of East Buckeye Rd	511	J4-1	36" x 54"	1	--	--	--	--	--	1	
	SB USH 51	Median, South of East Buckeye Rd	512R	--	--	--	--	--	--	1	1	--	
	SB USH 51	South of East Buckeye Rd	513	J4-1	36" x 54"	1	--	--	--	--	--	1	
	SB USH 51	South of East Buckeye Rd	514R	--	--	--	--	--	--	1	1	--	
	NB USH 51	Median, South of East Buckeye Rd	515	J3-1	36" x 84"	--	1	--	--	--	--	1	
	NB USH 51	South of East Buckeye Rd	516	J3-1	36" x 84"	--	--	1	--	--	--	1	
	SB USH 51	Median, North of Pflaum Rd	517	J3-1	36" x 84"	--	1	--	--	--	--	1	
	SB USH 51	North of Pflaum Rd	518	J3-1	36" x 84"	--	--	1	--	--	--	1	
	NB USH 51	North of Pflaum Rd	519	J4-1	36" x 54"	--	1	--	--	--	--	1	
	NB USH 51	Median, North of Pflaum Rd	520	J4-1	36" x 54"	--	1	--	--	--	--	1	
	SB USH 51	Median, South of Pflaum Rd	521	J4-1	36" x 54"	--	1	--	--	--	--	1	
	SB USH 51	South of Pflaum Rd	522	J4-1	36" x 54"	1	--	--	--	--	--	1	
	NB USH 51	Median, South of Pflaum Rd	523	J3-1	36" x 84"	--	--	1	--	--	--	1	
	NB USH 51	South of Pflaum Rd	524	J3-1	36" x 84"	--	1	--	--	--	--	1	
	NB USH 51	Median, South of Pflaum Rd	525	J4-1	36" x 54"	1	--	--	--	--	--	1	
	NB USH 51	South of Pflaum Rd	526	J4-1	36" x 54"	--	1	--	--	--	--	1	
	SB USH 51	Median, South of Pflaum Rd	527R	--	--	--	--	--	--	1	1	--	
	SB USH 51	Median, South of Pflaum Rd	528R	--	--	--	--	--	--	1	--	--	Mounted with 527R
	SB USH 51	Median, South of Pflaum Rd	529	J2-1	36" x 90"	--	--	1	--	--	--	1	
	SB USH 51	South of Pflaum Rd	530R	--	--	--	--	--	--	1	1	--	
	SB USH 51	South of Pflaum Rd	531R	--	--	--	--	--	--	1	--	--	Mounted with 527R
	SB USH 51	South of Pflaum Rd	532	J2-1	36" x 90"	--	--	1	--	--	--	1	
	SB USH 51	North of USH 12/18 Intersection	601	J2-1	36" x 84"	--	1	--	--	--	--	1	
	SB USH 51	Median, North of USH 12/18 Inters.	602	J2-1	36" x 84"	--	--	1	--	--	--	1	
	NB USH 51	Median, North of USH 12/18 Inters.	603	J4-1	36" x 54"	--	1	--	--	--	--	1	
	NB USH 51	North of USH 12 & 18 Intersection	604	J4-1	36" x 54"	--	1	--	--	--	--	1	
	SB USH 51	South of East Broadway	605R	--	--	--	--	--	--	1	1	--	
	SB USH 51	South of East Broadway	606	J2-1	36" x 84"	--	--	1	--	--	--	1	
	SB USH 51	Median, South of East Broadway	607	J2-1	36" x 84"	--	--	1	--	--	--	1	
	NB USH 51	South of East Broadway	608R	--	--	--	--	--	--	1	1	--	
	NB USH 51	South of East Broadway	609	J3-1	36" x 84"	--	1	--	--	--	--	1	
	SB USH 51	Under USH 12/18 Overpass	610	J2-1	36" x 84"	--	--	--	--	--	--	1	Band to Bridge Pier
	SB USH 51	Median, South of USH 12/18 Inters.	611	J3-1	36" x 84"	--	1	--	--	--	--	1	
	EB USH 12/18	EB USH 12/18 On Ramp	612R	--	--	--	--	--	--	1	1	--	
	WB USH 12/18	USH 51 Off Ramp	613R	--	--	--	--	--	--	1	1	--	
	WB USH 12/18	USH 51 Off Ramp	614	J3-2	72" x 84"	--	1	1	--	--	--	1	
	WB USH 12/18	USH 51 Off Ramp	615R	--	--	--	--	--	--	1	1	--	
	WB USH 12/18	USH 51 Off Ramp	616R	--	--	--	--	--	--	1	--	--	Mounted on Overhead Cantaliver Support
	WB USH 12/18	USH 51 Off Ramp	617	J3-1	36" x 84"	--	--	1	--	--	--	1	Mount on Overhead Cantaliver Support
	EB USH 12/18	East of USH 51 Intersection	618	J4-1	36" x 54"	--	1	--	--	--	--	1	
	EB USH 12/18	East of USH 51 Intersection	619R	--	--	--	--	--	--	1	--	--	Mounted on Overhead Sign Bridge
	WB USH 12/18	Median, East of USH 51 Inters.	620	J2-1	36" x 84"	--	1	--	--	--	--	1	
	WB USH 12/18	East of USH 51 Intersection	621	J2-1	36" x 84"	--	1	--	--	--	--	1	
	WB USH 12/18	East of USH 51 Intersection	622R	--	--	--	--	--	--	1	--	--	Mounted on Overhead Sign Bridge
	WB USH 12/18	East of USH 51 Intersection	623R	--	--	--	--	--	--	1	--	--	Mounted with 622R
	WB USH 12/18	Median, East of USH 51 Inters.	624R	--	--	--	--	--	--	1	1	--	Mounted on Overhead Sign Bridge
	WB USH 12/18	Median, East of USH 51 Inters.	625R	--	--	--	--	--	--	1	--	--	Mounted with 622R
	WB USH 12/18	East of USH 51 Intersection	626	J2-1	36" x 90"	--	--	1	--	--	--	1	
	WB USH 12/18	Median, East of USH 51 Inters.	627	J2-1	36" x 90"	--	--	1	--	--	--	1	
	NB IH 39/90	At USH 12/18 Intersection	628R	--	--	--	--	--	--	1	1	--	
	NB IH 39/90	At USH 12/18 Intersection	629	J3-1	36" x 84"	--	1	--	--	--	--	1	
					TOTAL	6	26	39	16	62	44	167	

** ADDITIONAL QUANTITIES UNDER MAINLINE PERMANENT TYPE II SIGNS

3

SIGNS REFLECTIVE FOLDING TYPE II

GROUP CODE	SIGN NO.	RAMP GATE NO.	SIGN PLATE NO.	LOCATION	(637.0402) SIGNS REFLECTIVE FOLDING TYPE II SF	REMARKS
	I39/90/94 & USH 151:					
0010	RG-1	G13-17	R11-54F	SB 151 to NB I39 On Ramp	10	MOUNT ON EXISTING SIGN BRIDGE
	RG-2	G13-18	R11-54F	NB 151 to NB I39 On Ramp	10	MOUNT ON EXISTING SIGN BRIDGE
	RG-3	G13-19	R11-54F	SB 151 to SB I39 On Ramp	10	MOUNT ON EXISTING SIGN BRIDGE
	RG-4	G13-20	R11-54F	NB 151 to SB I39 On Ramp	10	MOUNT ON EXISTING SIGN BRIDGE
	I39/90/94 & HIGH CROSSING BLVD:					
	RG-5	G13-21	R11-54F	NB High Crossing Blvd to SB I39 On Ramp	10	MOUNT ON EXISTING SIGN BRIDGE
	RG-6	G13-21	R11-54F	SB High Crossing Blvd to SB I39 On Ramp	10	MOUNT ON EXISTING SIGN BRIDGE
				TOTAL	60	

MOVING SIGNS

GROUP CODE	STATION	LOCATION	NUMBER ON PLAN	638.2102 MOVING SIGNS TYPE II EACH	638.4000 MOVING SMALL SIGN SUPPORTS EACH	REMARKS
010	260+50 EB	RT	3-14	1	—	INSTALL AT 256+00 EB
	467+00 EB	RT	10-2	1	2	INSTALL AT 455+50 EB
			TOTAL	2	2	

TRAFFIC CONTROL ITEMS

STAGE	LENGTH CALENDAR DAYS	CATEGORY 0010 643.0300 TRAFFIC CONTROL DRUMS DAY	CATEGORY 0010 643.0420 TRAFFIC CONTROL BARRICADES TYPE III DAY	CATEGORY 0010 643.0705 TRAFFIC CONTROL WARNING LIGHTS TYPE A DAY	CATEGORY 0010 643.0715 TRAFFIC CONTROL WARNING LIGHTS TYPE C DAY	CATEGORY 0010 643.0800 TRAFFIC CONTROL ARROW BOARDS DAY	CATEGORY 0010 643.0900 TRAFFIC CONTROL SIGNS DAY	CATEGORY 0010 643.0920 TRAFFIC CONTROL COVERING SIGNS TYPE II EACH	CATEGORY 0010 SPV.0045.01 PORTABLE CHANGEABLE MESSAGE SIGN DAY	REMARKS
PREWARNING	7	70	—	—	—	—	—	—	14	
EASTBOUND										
STAGE 1A	4	330	8	—	104	12	88	—	—	
STAGE 1B	22 *	1,755	57	46	331	35	444	104	56	INCLUDES RAMP CLOSURE PREWARNINGS
STAGE 2A	5	450	15	—	65	10	100	3	—	
STAGE 2B	5	450	15	—	65	10	152	3	—	
STAGE 2C	5	650	42	—	130	15	198	3	—	
STAGE 2D	2	330	12	12	57	5	95	54	13	INCLUDES RAMP CLOSURE PREWARNINGS
STAGE 2E	5	795	235	32	122	10	198	68	44	INCLUDES RAMP CLOSURE PREWARNINGS
STAGE 2F	3	505	39	20	87	6	121	14	15	
STAGE 3A	5	450	15	—	65	10	100	3	—	
STAGE 3B	5	450	15	—	65	10	152	3	—	
STAGE 3C	5	650	42	—	130	15	198	3	—	
STAGE 3D	2	330	12	12	57	5	95	54	13	INCLUDES RAMP CLOSURE PREWARNINGS
STAGE 3E	5	795	235	32	122	10	198	68	44	INCLUDES RAMP CLOSURE PREWARNINGS
STAGE 3F	3	505	39	20	87	6	121	14	15	
STAGE 4A	3	515	43	22	82	6	82	42	49	INCLUDES RAMP CLOSURE PREWARNINGS
STAGE 4B	4	895	68	18	123	8	131	44	29	INCLUDES RAMP CLOSURE PREWARNINGS
STAGE 4C	2	830	53	6	88	4	96	42	7	INCLUDES RAMP CLOSURE PREWARNINGS
WESTBOUND										
STAGE 1A	7	730	28	—	182	21	141	1	—	
STAGE 1B	24 *	1,730	15	8	244	36	325	11	12	INCLUDES RAMP CLOSURE PREWARNINGS
STAGE 2A	4	470	19	4	52	8	90	4	10	INCLUDES RAMP CLOSURE PREWARNINGS
STAGE 2B	4	470	19	4	52	8	134	4	3	
STAGE 2C	4	630	48	4	104	12	150	4	3	
STAGE 2D	1	265	14	—	62	6	72	2	—	
STAGE 2E	4	670	45	12	124	14	156	20	46	INCLUDES RAMP CLOSURE PREWARNINGS
STAGE 2F	3	535	36	22	121	10	128	18	13	
STAGE 3A	4	470	19	4	52	8	90	4	10	INCLUDES RAMP CLOSURE PREWARNINGS
STAGE 3B	4	470	19	4	52	8	134	4	3	
STAGE 3C	4	630	48	4	104	12	150	4	3	
STAGE 3D	1	265	14	—	62	6	72	2	—	
STAGE 3E	4	670	45	12	124	14	156	20	46	INCLUDES RAMP CLOSURE PREWARNINGS
STAGE 3F	3	535	36	22	121	10	128	18	13	
STAGE 4A	3	485	32	22	134	9	144	20	47	INCLUDES RAMP CLOSURE PREWARNINGS
STAGE 4B	4	1,015	61	8	140	14	162	9	19	INCLUDES RAMP CLOSURE PREWARNINGS
STAGE 4C	2	925	63	4	104	4	120	21	10	INCLUDES RAMP CLOSURE PREWARNINGS
TOTAL		21,720	1,506	354	3,614	377	4,921	688	537	

* INCLUDES CONCRETE CURB WORK (INCLUDING CURE TIME) AND USH 51 RAMP EXTENSIONS

3

PAVEMENT MARKING ITEMS

GROUP CODE	STATION	LOCATION	646.0106 PAVEMENT MARKING EPOXY 4-INCH LF (White)	646.0406 PAVEMENT MARKING SAME DAY EPOXY 4-INCH LF (Yellow)	646.0873.S PAVEMENT MARKING WET REFLECTIVE TAPE 8-INCH LF (White, Edge Line)	646.0873.S LF (White, Dashed Line*)	646.0881.S PAVEMENT MARKING GROOVED WET REFLECTIVE TAPE 4-INCH LF (White, Lane Line)	646.0881.S LF (White, Dashed Line*)	647.0746 PAVEMENT MARKING DIAGONAL EPOXY 24-INCH LF	649.0200 TEMPORARY PAVEMENT MARKING REFLECTIVE PAINT 4-INCH LF
010	STA 200+00 EB TO STA 477+85 EB	EB (STAGE 2B-2E)	---	—	—	---	—	---	—	73,450
	STA 200+00 WB TO STA 477+85 WB	WB (STAGE 2B-2E)	---	—	—	---	—	---	—	72,550
	STA 200+00 EB TO STA 477+85 EB	EB (STAGE 3B-3E)	25,850	26,350	6,220	288	—	---	405	15,050
	STA 200+00 WB TO STA 477+85 WB	WB (STAGE 3B-3E)	25,900	26,150	6,380	---	—	---	485	13,850
	STA 200+00 EB TO STA 477+85 EB	EB (STAGE 4)	---	—	—	---	14,850	235	—	---
	STA 200+00 WB TO STA 477+85 WB	WB (STAGE 4)	---	—	—	---	13,650	180	—	---
		SUB TOTAL			12,600	288	28,500	415		
		TOTAL	51,750	52,500	12,888		28,915		890	174,900

* 3' LINE, 9' GAP

STAKING ITEMS

GROUP CODE	STATION	LOCATION	650.4500 CONSTRUCTION STAKING SUBGRADE LF	650.5000 CONSTRUCTION STAKING BASE LF	650.8000 CONSTRUCTION STAKING RESURFACING REFERENCE LF	650.9910 CONSTRUCTION STAKING SUPPLEMENTAL CONTROL LS	650.9920 CONSTRUCTION STAKING SLOPE STAKES LF
010	STA 200+00 EB to STA 477+85 EB	EB & WB	—	---	55,500	1	44,170
	STA 209+51 EB TO STA 215+21 EB	RAMP	570	570	---	---	---
	STA 241+66 WB TO STA 247+36 WB	RAMP	570	570	---	---	---
	TOTAL		1,140	1,140	55,500	1	44,170

SAWING ITEMS

GROUP CODE	STATION	LOCATION	690.0150 SAWING ASPHALT LF	690.0250 SAWING CONCRETE LF	SPV.0090.03 SAWING CONCRETE PARTIAL SAWCUT LF	REMARKS
010	STA 209+51 EB TO STA 215+21 EB	RAMP	5	637	---	
	STA 241+66 WB TO STA 247+36 WB	RAMP	5	606	---	
	STA 381+15 EB TO STA 385+00 EB	RT	—	385	---	
	STA 412+88 EB TO STA 416+07 EB	RT	—	319	---	
	STA 378+50 WB TO STA 391+98 WB	LT	—	1,348	---	
	STA 415+00 WB TO STA 424+76 WB	LT	—	976	---	
	STA 426+00 WB TO STA 435+09 WB	LT	—	909	---	
	STA 200+00 EB TO STA 477+85 EB	EB & WB	—	400	---	BASE PATCHING CONCRETE
	STA 200+00 EB TO STA 477+85 EB	EB & WB	—	3,120	1,270	CONTINUOUSLY REINFORCED PAVEMENT REPAIR
	STA 378+50 EB TO STA 435+00 EB	EB & WB	—	210	---	CONCRETE MEDIAN SLOPED NOSE REMOVALS
	TOTAL		10	8,910	1,270	

3

FTMS PULLBOXES

CATEGORY	LOCATION	ITEM ID	653.0135* PULL BOXES STEEL 24 x 36 EA
0020	334+90, 125' LT	PBHA05	1
0020	334+08, 85' LT	PBHA10	1
		TOTAL	2

* ADDITIONAL QUANTITIES LISTED ELSEWHERE

FTMS POWER

CATEGORY	ITEM I.D.	LOCATION	656.0200.01 ELECTRICAL SERVICE METER BREAKER PEDESTAL EA	656.0500.01 ELECTRICAL SERVICE BREAKER DISCONNECT BOX (DMS-13-0023) LS
0020	MBHA05	335+00, 123' LT	1	--
0020	DMS-13-0023	334+18, 57' LT	--	1
		TOTAL	1	1

3

FTMS LUMP SUM ITEMS

CATEGORY	ITEM ID	670.0100 FIELD SYSTEM INTEGRATOR LS	670.0200 ITS DOCUMENTATION EA
0020	PROJECT	1	1
	TOTAL	1	1

FTMS CONDUIT AND CABLING

CATEGORY	FROM	TO	LINEAR DISTANCE	652.0125 CONDUIT RIGID METALLIC 2-INCH LF	652.0225* CONDUIT RIGID NONMETALLIC SCHEDULE 40 2-INCH LF	655.0615 ELECTRICAL WIRE LIGHTING 10 AWG LF	655.0625 ELECTRICAL WIRE LIGHTING 6 AWG LF
0020	MBHA05	PBHA05	10	--	10	10	30
0020	PBHA05	PBHA10	90	--	90	90	270
0020	PBHA10	DMS-13-0023	10	10	--	--	--
		TOTAL		10	100	100	300

* ADDITIONAL QUANTITIES LISTED ELSEWHERE

FTMS CABINETS

CATEGORY	ITEM I.D.	LOCATION	659.0802 PLAQUES SEQUENCE IDENTIFICATION EA	673.0225.S INSTALL POLE MOUNTED CABINET EA	SPV.0060.06 INSTALL SPREAD SPECTRUM RADIO EA	SPV.0060.07 INSTALL CABINET MOUNT YAGI ANTENNA EA	SPV.0060.08 INSTALL POLE MOUNT YAGI ANTENNA EA	SPV.0060.10 INSTALL TERMINAL SERVER EA
0020	DMS-13-0023	334+18, 57' LT	1	1	1	1	--	--
0020	EXCCTV-13-0051	IH 39/90/94 AT USH-151	--	--	1	--	1	1
		TOTAL	1	1	2	1	1	1

FTMS SIGNING

CATEGORY	ITEM I.D.	LOCATION	STEEL POST TYPE	635.0200* SIGN SUPPORTS STRUCTURAL STEEL HS LB	636.0100* SIGN SUPPORTS CONCRETE MASONRY CY	636.0500* SIGN SUPPORTS STEEL REINFORCEMENT LB	SPV.0060.09 INSTALL GROUND MOUNT DYNAMIC MESSAGE SIGN EA	SPV.0060.11 GROUND ROD EA	INFO ONLY - POST LENGTHS TO BE VERIFIED BY CONTRACTOR: POST NO. 1 LENGTH FT	POST NO. 2 LENGTH FT	POST NO. 3 LENGTH FT	OFF SET DISTANCE FT
0020	DMS-13-0023	334+18, 57' LT	C	1169.5	2.7	150	1	1	12.3	10.9	9.6	34
			TOTALS	1169.5	2.7	150	1	1				

* ADDITIONAL QUANTITIES LISTED ELSEWHERE

3

RAMP CLOSURE GATES

GROUP CODE	No.	Location	(654.0105) CONCRETE BASES TYPE 5 EACH	(657.0255) TRANSFORMER BREAKAWAY 11 1/2-INCH BOLT CIRCLE EACH	(SPV.0060.01) RAMP CLOSURE GATES HARDWIRED 32-FT EACH	(SPV.0060.02) RAMP CLOSURE GATES ARMS STOCKPILE 32-FT EACH	(SPV.0060.03) RAMP CLOSURE GATES HARDWIRED 26-FT EACH	(SPV.0060.04) RAMP CLOSURE GATES HARDWIRED 24-FT EACH
0010	I39/90/94 & USH 151:							
	G13-17	SB 151 to NB I39 On Ramp	1	1	---	---	1	---
	G13-18	NB 151 to NB I39 On Ramp	1	1	---	---	---	1
	G13-19	SB 151 to SB I39 On Ramp	1	1	---	---	---	1
	G13-20	NB 151 to SB I39 On Ramp	1	1	---	---	1	---
	I39/90/94 & HIGH CROSSING BLVD:							
	G13-21	High Crossing Blvd to SB I39 On Ramp	1	1	1	---	---	---
		See Special Provisions	---	---	---	1	---	---
		TOTAL	5	5	1	1	2	2

PULL BOXES STEEL

GROUP CODE	NO.	LOCATION	(653.0135)* PULL BOXES STEEL 24x36-INCH EA	(653.0140) PULL BOXES STEEL 24x42-INCH EA	SPV.0060.12 GROUNDING PULL BOX EA
	I39/90/94 & USH 151:				
0010	PB-1	SB USH 151 to WB I39/90/94 On Ramp	1	---	1
	PB-2	SB USH 151 to WB I39/90/94 On Ramp	1	---	1
	PB-3	NB USH 151 to WB I39/90/94 On Ramp	---	1	1
	PB-4	SB USH 151 to EB I39/90/94 On Ramp	---	1	1
	PB-5	SB USH 151 to EB I39/90/94 On Ramp	---	1	1
	PB-6	SB USH 151 to EB I39/90/94 On Ramp	---	1	1
	PB-7	NB USH 151 to EB I39/90/94 On Ramp	1	---	1
	PB-8	NB USH 151 to EB I39/90/94 On Ramp	1	---	1
	PB-9	NB USH 151 to EB I39/90/94 On Ramp	1	---	1
	EXPB-1	SB USH 151 to WB I39/90/94 On Ramp	---	---	1
	EXPB-2	SB USH 151 to WB I39/90/94 On Ramp	---	---	1
	EXPB-3	WB I39/90/94 Off Ramp to NB USH 151	---	---	1
	EXPB-4	NB USH 151 to WB I39/90/94 On Ramp	---	---	1
	EXPB-5	EB I39/90/94 Off Ramp to SB USH 151	---	---	1
	EXPB-6	SB USH 151 to EB I39/90/94 On Ramp	---	---	1
	EXPB-7	NB USH 151 to EB I39/90/94 On Ramp	---	---	1
	I39/90/94 & HIGH CROSSING BLVD:				
	PB-10	NB High Crossing Blvd to EB I39/90/94 On Ramp	---	1	---
		TOTAL	5	5	16

*ADDITIONAL QUANTITIES LISTED ELSEWHERE

CONDUIT

GROUP CODE	FROM	TO	(652.0210) CONDUIT RIGID NONMETALLIC SCHEDULE 40 1-INCH LF	(652.0225)* CONDUIT RIGID NONMETALLIC SCHEDULE 40 2-INCH LF	(652.0605) CONDUIT SPECIAL 2-INCH LF
0010	I39/90/94 & USH 151:				
	SDS-13-024	EXPB-1	25	---	---
	G13-17	PB-1	---	10	---
	PB-1	PB-2	---	180	---
	PB-2	EXPB-2	---	180	---
	SDS-13-023	EXPB-3	35	---	---
	G13-18	PB-3	---	10	---
	PB-3	EXPB-4	---	80	---
	SDS-13-025	EXPB-5	35	---	---
	G13-19	PB-4	---	10	---
	PB-4	PB-5	---	200	---
	PB-5	PB-6	---	190	---
	PB-6	EXPB-6	---	---	50
	G13-20	PB-7	---	10	---
	PB-7	PB-8	---	---	50
	PB-8	PB-9	---	160	---
	PB-9	EXPB-7	---	160	---
	I39/90/94 & HIGH CROSSING BLVD:				
	SDS-13-025	EXPB-8	20	---	---
	G13-21	PB-10	---	10	---
	PB-10	EXPB-5	---	70	---
		TOTAL	115	1270	100

* ADDITIONAL QUANTITIES LISTED ELSEWHERE

ELECTRICAL WIRE TRAFFIC SIGNALS

GROUP CODE	FROM	TO	(655.0515) ELECTRICAL WIRE TRAFFIC SIGNALS 10 AWG (BLACK) LF	(655.0515) ELECTRICAL WIRE TRAFFIC SIGNALS 10 AWG EQUIPMENT GROUNDING CONDUCTOR (GREEN) LF
	I39/90/94 & USH 151:			
0010	G13-17	SDS-13-024	2480	1240
	G13-18	SDS-13-023	1200	600
	G13-19	SDS-13-025	1200	600
	G13-20	SDS-13-025	2280	1140
	I39/90/94 & HIGH CROSSING BLVD:			
	G13-21	SDS-13-022	240	120
	G13-21	PB-10	---	20
	G13-21	EXPB-8	---	90
		SUBTOTAL	7400	3810
		TOTAL	11210	

3

Standard Detail Drawing List

08D01-17	CONCRETE CURB, CONCRETE CURB AND GUTTER AND TIES
08E08-03	TYPICAL INSTALLATIONS OF EROSION BALES / TEMPORARY DITCH CHECKS
08E09-06	SILT FENCE
09B02-07	CONDUIT
09B04-09	PULL BOX
09C02-06	CONCRETE BASES, TYPES 1, 2 & 5
09C03-03	TRANSFORMER/PEDESTAL BASES
11B02-02	CONCRETE MEDIAN NOSE
12A04-02	STRUCTURE IDENTIFICATION PLAQUES, RAMP GATES, SIGN BRIDGES & OVERHEAD SIGN SUPPORT
13A05-04A	SHOULDER RUMBLE STRIP, MILLING
13A05-04B	SHOULDER RUMBLE STRIP, MILLING
13A07-02	CONTINUOUSLY REINFORCED CONCRETE PAVEMENT REPAIR AND REPLACEMENT
13C14-04A	BASE PATCHING CONCRETE
13C14-04B	BASE PATCHING CONCRETE
13C14-04C	BASE PATCHING CONCRETE
14B07-12A	CONCRETE BARRIER TEMPORARY PRECAST, 12'-6"
14B07-12B	CONCRETE BARRIER TEMPORARY PRECAST, 12'-6"
14B07-12C	CONCRETE BARRIER TEMPORARY PRECAST, 12'-6"
14B07-12D	CONCRETE BARRIER TEMPORARY PRECAST, 12'-6"
14B42-02A	MIDWEST GUARDRAIL SYSTEM (MGS) GUARDRAIL
14B42-02B	MIDWEST GUARDRAIL SYSTEM (MGS) GUARDRAIL
14B42-02C	MIDWEST GUARDRAIL SYSTEM (MGS) GUARDRAIL
14B44-01A	MIDWEST GUARDRAIL SYSTEM ENERGY ABSORBING TERMINAL (MGS)
14B44-01B	MIDWEST GUARDRAIL SYSTEM ENERGY ABSORBING TERMINAL (MGS)
14B44-01C	MIDWEST GUARDRAIL SYSTEM ENERGY ABSORBING TERMINAL (MGS)
14B45-02A	MIDWEST GUARDRAIL SYSTEM THRIE BEAM TRANSITION (MGS)
14B45-02B	MIDWEST GUARDRAIL SYSTEM THRIE BEAM TRANSITION (MGS)
14B45-02C	MIDWEST GUARDRAIL SYSTEM THRIE BEAM TRANSITION (MGS)
14B45-02D	MIDWEST GUARDRAIL SYSTEM THRIE BEAM TRANSITION (MGS)
14B47-01A	MIDWEST GUARDRAIL SYSTEM (MGS) TYPE 2 TERMINAL
14B47-01B	MIDWEST GUARDRAIL SYSTEM (MGS) TYPE 2 TERMINAL
14B47-01C	MIDWEST GUARDRAIL SYSTEM (MGS) TYPE 2 TERMINAL
15A02-07	DELINEATOR POST, DELINEATOR BRACKET AND DELINEATOR
15A06-02	DELINEATOR LAYOUT
15C08-14A	PAVEMENT MARKING (MAINLINE)
15C10-10	PAVEMENT MARKINGS FOR DROP LANES FREEWAY/EXPRESSWAY
15C31-01A	PAVEMENT MARKING (RAMPS AND GORES)
15C31-01D	PAVEMENT MARKING FOR PARALLEL ON-RAMP AND PARALLEL OFF-RAMP
15D12-02	TRAFFIC CONTROL, LANE CLOSURE, SPEEDS GREATER THAN 40 M.P.H.
15D14-01	TRAFFIC CONTROL, TWO LANE CLOSURE ON FREEWAY OR EXPRESSWAY, SHORT-TERM (LESS THAN 24 HOURS)
15D15-01	TRAFFIC CONTROL, EXIT AND ENTRANCE RAMP WITHIN LANE CLOSURE
15D16-01	TRAFFIC CONTROL, EXIT RAMP CLOSURE
15D27-01	TRAFFIC CONTROL, SHOULDER CLOSURE ON DIVIDED ROADWAY, SPEEDS GREATER THAN 40 MPH

6

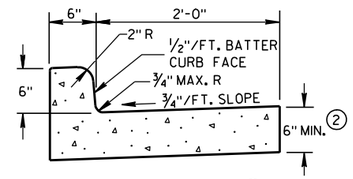

TYPES A & D ①

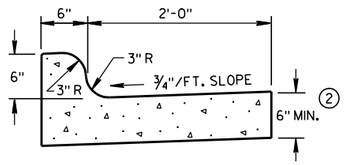

TYPES K & L ①

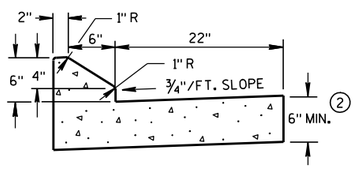

6" SLOPED CURB TYPES G & J ①

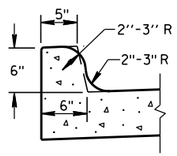

OPTIONAL CURB SHAPE FOR TYPES K & L ①

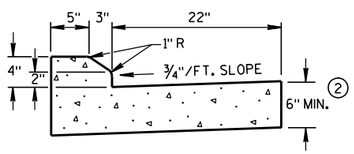

4" SLOPED CURB TYPES G & J ①

CONCRETE CURB & GUTTER 30"

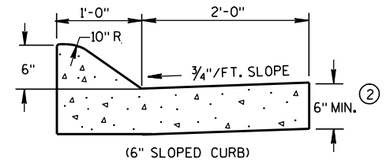

(6" SLOPED CURB)

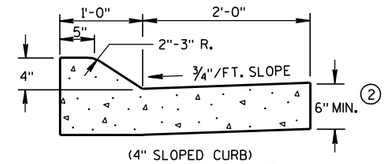

(4" SLOPED CURB)

TYPES A & D ①

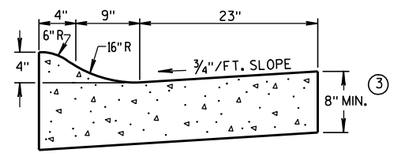

4" SLOPED CURB TYPES R & T ① ④

CONCRETE CURB & GUTTER 36"

GENERAL NOTES

DETAILS OF CONSTRUCTION, MATERIALS AND WORKMANSHIP NOT SHOWN ON THIS DRAWING SHALL CONFORM TO THE PERTINENT REQUIREMENTS OF THE CONTRACT.

PAVEMENT TIES AND TIE BARS SHALL BE EPOXY COATED IN CONFORMANCE WITH SUBSECTION 505.2.6.2 OF THE STANDARD SPECIFICATIONS.

INTEGRAL CURB & GUTTER SHALL CONFORM TO THE DETAILS SHOWN FOR CONCRETE CURB & GUTTER INCLUDING THE TRANSVERSE GUTTER SLOPE. A LONGITUDINAL CONSTRUCTION JOINT IS NOT REQUIRED WITH INTEGRAL CURB AND GUTTER.

WHERE THE TRANSVERSE JOINTS IN THE PAVEMENT ARE REQUIRED TO BE SEALED, THE JOINTS IN THE INTEGRAL CURB AND GUTTER SHALL BE SEALED TO THE FACE OF CURB WITH THE SAME TYPE OF SEALANT. THE COST OF FURNISHING AND INSTALLING THIS SEALANT SHALL BE INCIDENTAL TO THE ITEM CONCRETE CURB AND GUTTER.

UNLESS OTHERWISE SHOWN ON THE TYPICAL CROSS SECTIONS, THE BASE AGGREGATE AND COMMON EXCAVATION LIMITS ARE 2'-0" BEHIND THE BACK OF CURBS.

① TIE BARS ARE REQUIRED FOR CURB AND GUTTER TYPES A, G, K AND R.

② THE BOTTOM OF CURB AND GUTTER MAY BE CONSTRUCTED EITHER LEVEL OR PARALLEL TO THE SLOPE OF THE SUBGRADE OR BASE AGGREGATE PROVIDED A 6" MINIMUM GUTTER THICKNESS IS MAINTAINED.

③ THE BOTTOM OF CURB AND GUTTER MAY BE CONSTRUCTED EITHER LEVEL OR PARALLEL TO THE SLOPE OF THE SUBGRADE OR BASE AGGREGATE PROVIDED A 8" MINIMUM GUTTER THICKNESS IS MAINTAINED.

④ THE FACE OF CURB IS 6" FROM THE BACK OF CURB.

⑤ WHEN REVERSE SLOPE GUTTER IS REQUIRED, THE LOCATION(S) WILL BE SHOWN ELSEWHERE IN THE PLAN.

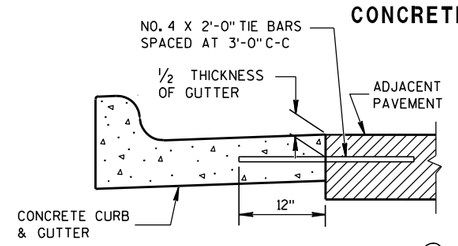

TYPICAL TIE BAR LOCATION ①

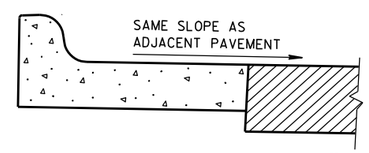

REVERSE SLOPE GUTTER ⑤
(TYPICAL FOR ALL CURB & GUTTER TYPES)

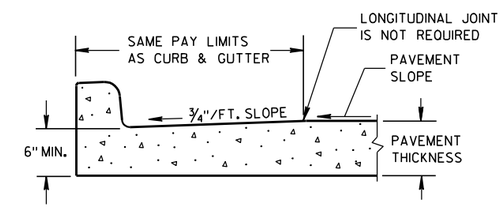

PARTIAL SECTION OF PAVEMENT WITH INTEGRAL CURB & GUTTER

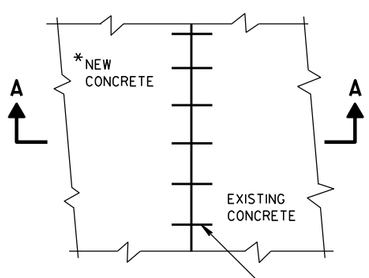

*NEW CURB & GUTTER, SURFACE DRAINS, CONCRETE PAVEMENT OR OTHER NEW CONCRETE.

PLAN VIEW

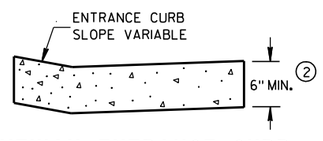

DRIVEWAY ENTRANCE CURB
(WHEN DIRECTED BY THE ENGINEER)

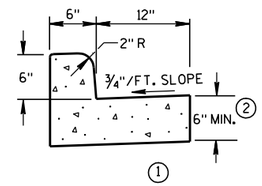

① TYPES A & D
CONCRETE CURB & GUTTER 18"

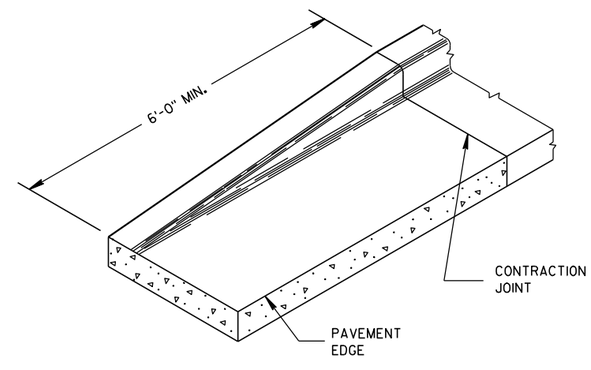

END SECTION CURB & GUTTER

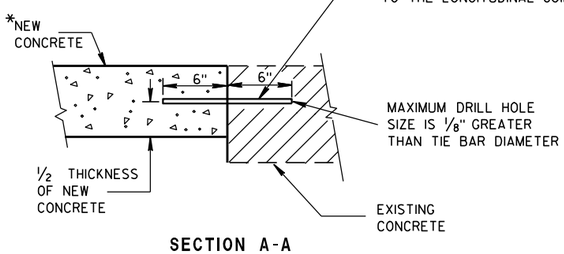

SECTION A-A

TIE BARS DRILLED INTO EXISTING PAVEMENT

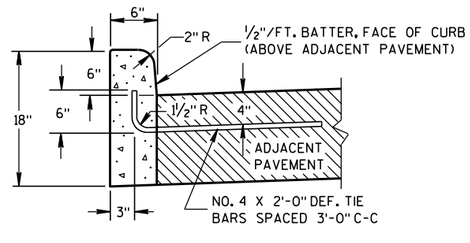

① TYPES A & D

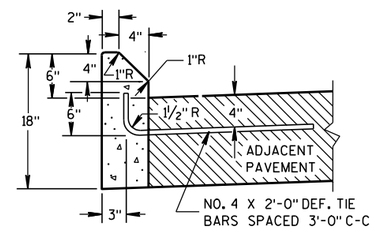

① TYPES G & J

CONCRETE CURB

CONCRETE CURB, CONCRETE CURB & GUTTER AND TIES

STATE OF WISCONSIN
DEPARTMENT OF TRANSPORTATION

APPROVED
9/4/08 — DATE
/S/ Jerry H. ---- — ROADWAY STANDARDS ENGINEER
FHWA

6

S.D.D. 8 D 1-17

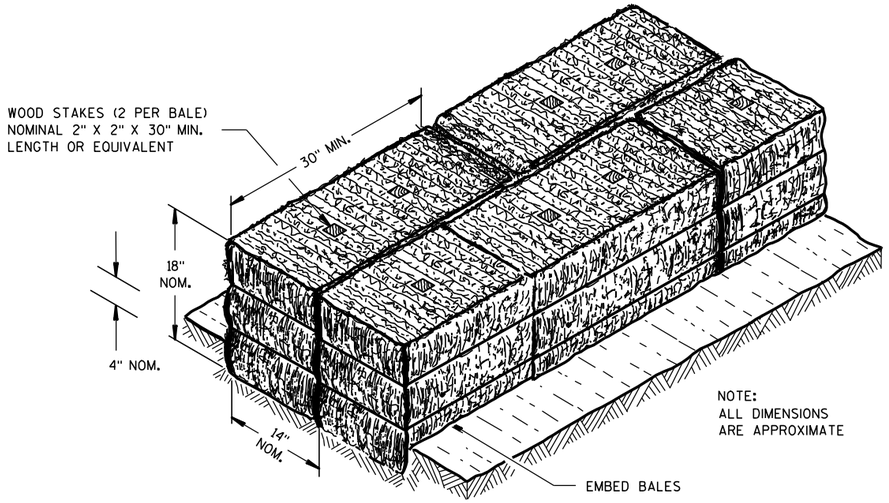

SECTION A-A

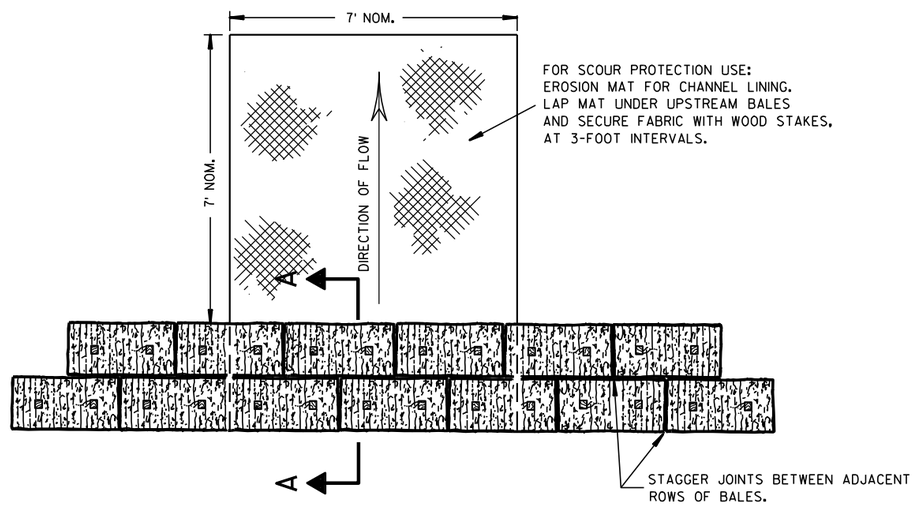

PLAN VIEW

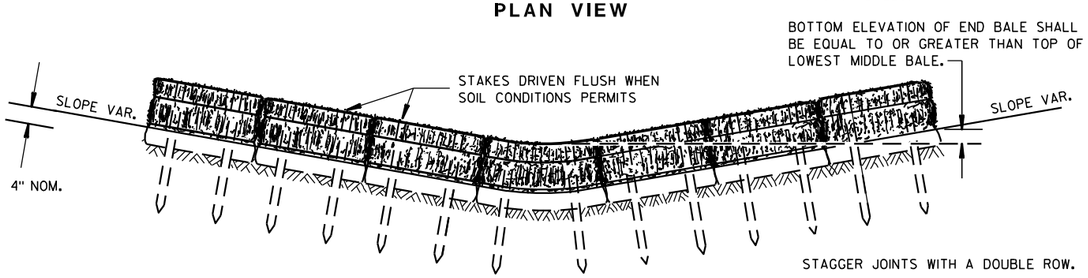

FRONT ELEVATION

TEMPORARY DITCH CHECK USING EROSION BALES ①

GENERAL NOTES

DETAILS OF CONSTRUCTION, MATERIALS AND WORKMANSHIP NOT SHOWN ON THIS DRAWING SHALL CONFORM TO THE PERTINENT REQUIREMENTS OF THE STANDARD SPECIFICATIONS AND THE APPLICABLE SPECIAL PROVISIONS.

① TEMPORARY DITCH CHECKS EITHER EROSION BALES OR MANUFACTURED SHALL BE PAID FOR UNDER THE BID ITEM OF TEMPORARY DITCH CHECK. THE DEPARTMENT WILL NOT PAY FOR TEMPORARY DITCH CHECKS CONSTRUCTED OF A SINGLE ROW OF EROSION BALES.

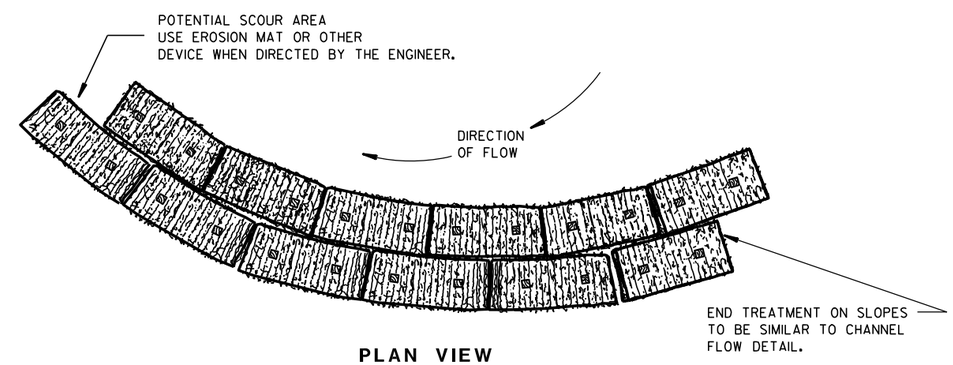

PLAN VIEW

WHEN ALTERING THE DIRECTION OF FLOW

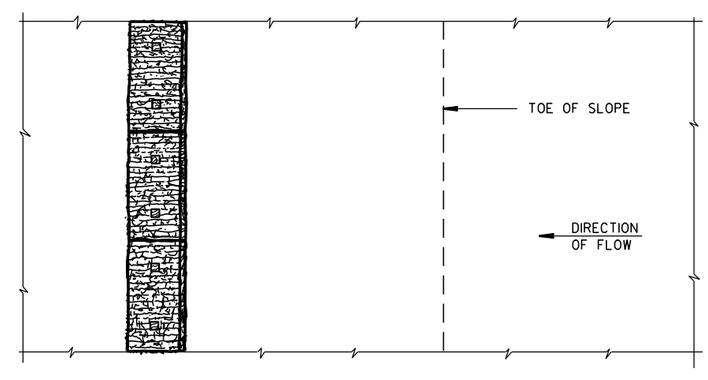

PLAN VIEW

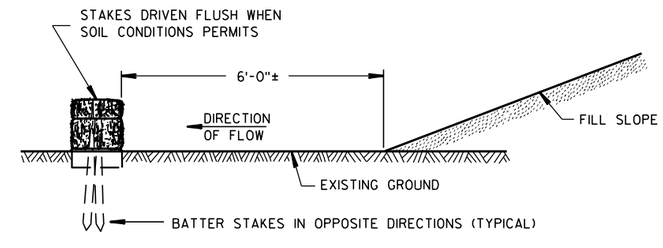

FRONT ELEVATION

WHEN EXISTING GROUND SLOPES AWAY FROM FILL SLOPE

EROSION BALES FOR SHEET FLOW

TYPICAL INSTALLATIONS OF EROSION BALES / TEMPORARY DITCH CHECKS

STATE OF WISCONSIN
DEPARTMENT OF TRANSPORTATION

APPROVED
6/04/02 — /S/ Beth Cann
DATE — CHIEF ROADWAY DEVELOPMENT ENGINEER
FHWA

6

6

S.D.D. 8 E 8-3

S.D.D. 8 E 8-3

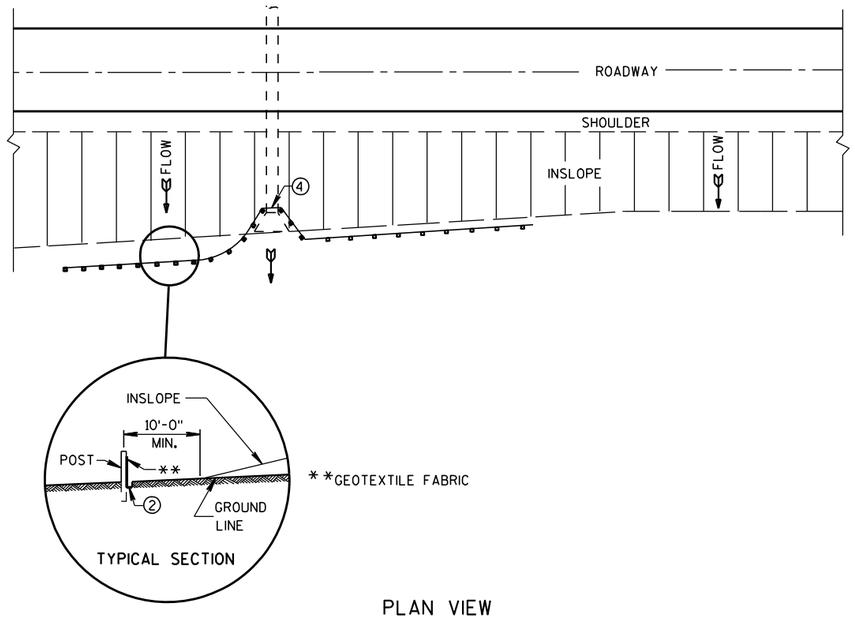

PLAN VIEW

TYPICAL APPLICATION OF SILT FENCE

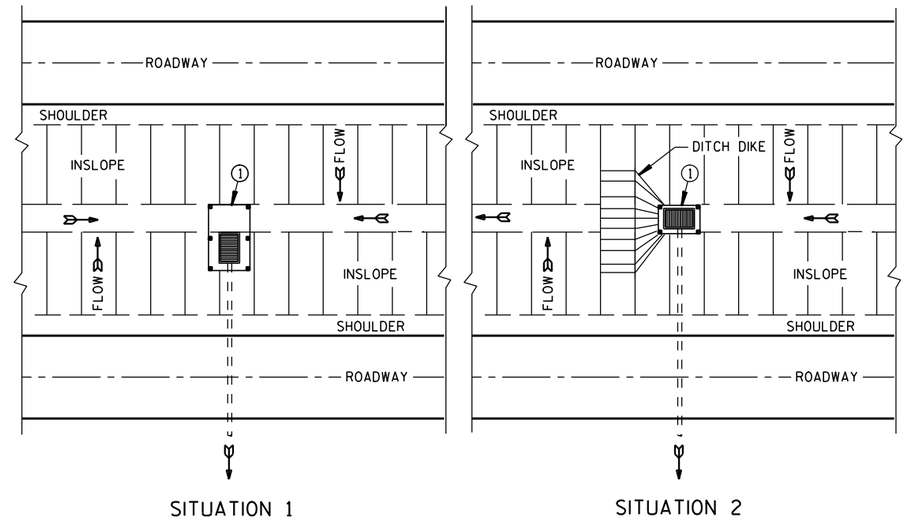

PLAN VIEW

SILT FENCE AT MEDIAN SURFACE DRAINS

GENERAL NOTES

DETAILS OF CONSTRUCTION NOT SHOWN ON THIS DRAWING SHALL CONFORM TO THE PERTINENT REQUIREMENTS OF THE STANDARD SPECIFICATIONS AND APPLICABLE SPECIAL PROVISIONS.

① HORIZONTAL BRACE REQUIRED WITH 2" X 4" WOODEN FRAME OR EQUIVALENT AT TOP OF POSTS.

② FOR MANUAL INSTALLATIONS THE TRENCH SHALL BE A MINIMUM OF 4" WIDE & 6" DEEP TO BURY AND ANCHOR THE GEOTEXTILE FABRIC. FOLD MATERIAL TO FIT TRENCH AND BACKFILL & COMPACT TRENCH WITH EXCAVATED SOIL.

③ WOOD POSTS SHALL BE A MINIMUM SIZE OF 1⅛" X 1⅛" OF OAK OR HICKORY.

④ SILT FENCE TO EXTEND ACROSS THE TOP OF THE PIPE.

⑤ CONSTRUCT SILT FENCE FROM A CONTINUOUS ROLL IF POSSIBLE BY CUTTING LENGTHS TO AVOID JOINTS. IF A JOINT IS NECESSARY USE ONE OF THE FOLLOWING TWO METHODS; A) OVERLAP THE END POSTS AND TWIST, OR ROTATE, AT LEAST 180 DEGREES. B) HOOK THE END OF EACH SILT FENCE LENGTH.

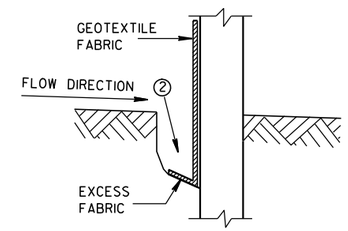

TRENCH DETAIL

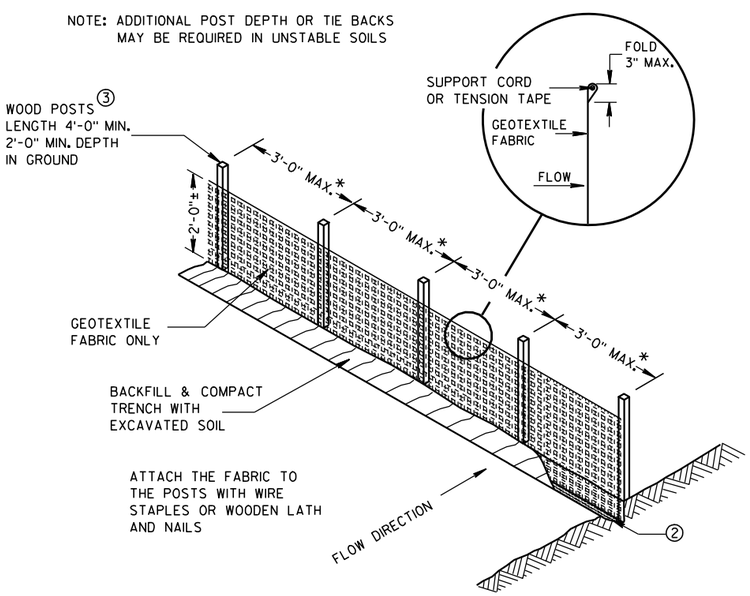

*NOTE: 8'-0" POST SPACING ALLOWED IF A WOVEN GEOTEXTILE FABRIC IS USED.

SILT FENCE

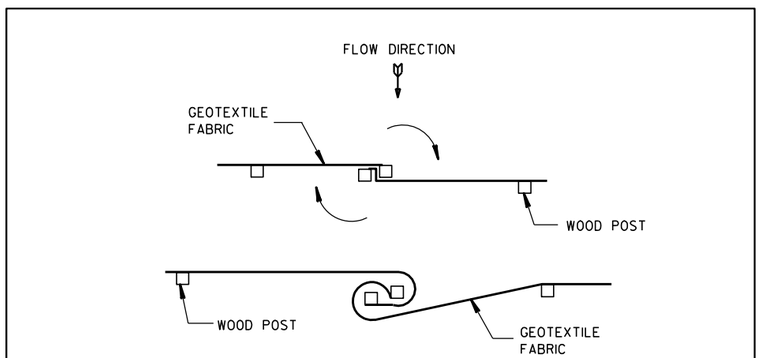

TWIST METHOD

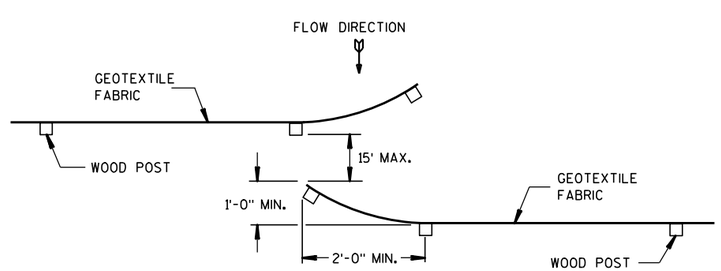

HOOK METHOD

JOINING TWO LENGTHS OF SILT FENCE ⑤

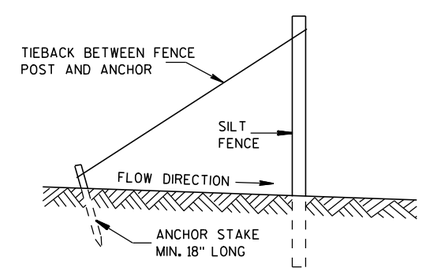

SILT FENCE TIE BACK

(WHEN REQUIRED BY THE ENGINEER)

SILT FENCE
STATE OF WISCONSIN DEPARTMENT OF TRANSPORTATION
APPROVED 4-29-05 /S/ Beth Cann----- DATE CHIEF ROADWAY DEVELOP ENGINEER FHWA

6

6

S.D.D. 8 E 9-6

S.D.D. 8 E 9-6

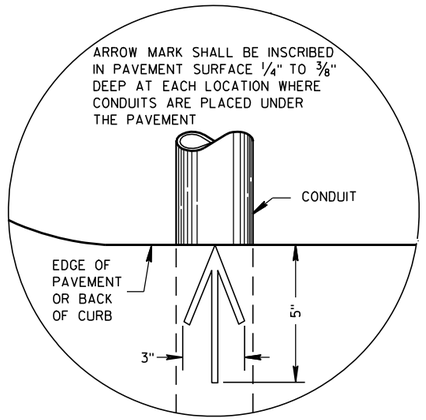

PLAN VIEW

ARROW MARK

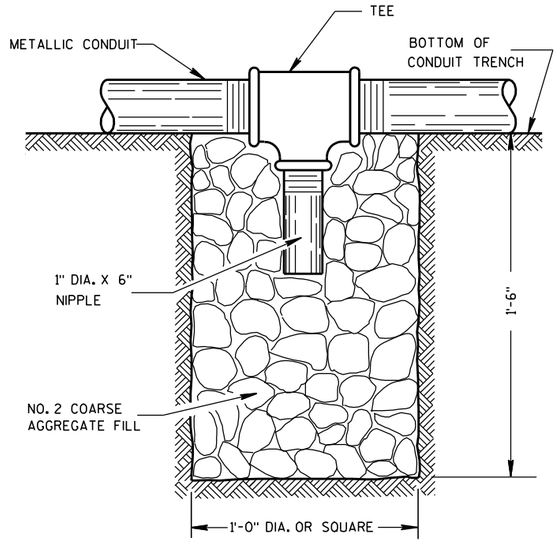

NOTE: INSTALL AT LOCATIONS WHERE METALLIC CONDUITS CANNOT BE PITCHED TO DRAIN INTO A PULL BOX.

DRAIN SUMP FOR METALLIC CONDUIT

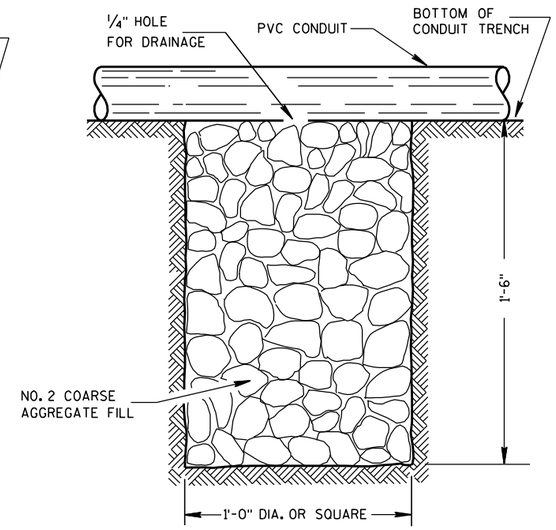

NOTE: INSTALL AT LOCATIONS WHERE PVC CONDUITS CANNOT BE PITCHED TO DRAIN INTO A PULL BOX.

DRAIN SUMP FOR PVC CONDUIT

GENERAL NOTES

DETAILS OF CONSTRUCTION, MATERIALS AND WORKMANSHIP NOT SHOWN ON THIS DRAWING SHALL CONFORM TO THE PERTINENT REQUIREMENTS OF THE CONTRACT.

METALLIC (STANDARD SPECIFICATION 652.2.2) OR NONMETALLIC (STANDARD SPECIFICATION 652.2.3) CONDUIT SHALL BE FURNISHED AND PLACED AS SHOWN.

DEPTH OF CONDUIT INSTALLED BELOW THE TRAVELED WAY SHALL BE 24 INCHES MINIMUM AND 36 INCHES MAXIMUM.

DEPTH OF CONDUIT INSTALLED THAT IS NOT BELOW THE TRAVELED WAY SHALL BE 18 INCHES MINIMUM AND 36 INCHES MAXIMUM.

ANY EXCEPTION TO THE MAXIMUM DEPTH SHALL BE ONLY WITH THE WRITTEN APPROVAL OF THE ENGINEER.

THE TRENCH SHALL NOT BE BACKFILLED PRIOR TO INSPECTION OF THE CONDUIT.

ALL METALLIC CONDUIT RACEWAY ENDS SHALL BE REAMED AND THREADED.

ALL METALLIC CONDUIT IN WHICH WIRE OR CABLE IS TO BE INSTALLED SHALL BE BUSHED WITH APPROVED THREADED BUSHINGS BEFORE INSTALLATION OF THE WIRE OR CABLE.

ALL METALLIC CONDUITS IN WHICH WIRE OR CABLE IS NOT TO BE INSTALLED SHALL BE CAPPED WITH THREADED PROTECTIVE CAPS, AS APPROVED BY THE ENGINEER.

ALL NONMETALLIC CONDUIT SHALL BE CAPPED OR PLUGGED IMMEDIATELY AFTER INSTALLATION AND SHALL REMAIN CAPPED OR PLUGGED UNTIL WIRE/CABLES ARE INSTALLED.

NONMETALLIC CONDUITS IN WHICH WIRE OR CABLE IS NOT BEING INSTALLED SHALL REMAIN CAPPED OR PLUGGED.

BENDING OF PVC ELECTRICAL CONDUIT SHALL BE ACCOMPLISHED BY USING A BLANKET OR EMERSION TYPE TANK DESIGNED FOR THE PURPOSE OF BENDING PVC ELECTRICAL CONDUIT.

ALL CUT ENDS SHALL BE TRIMMED INSIDE AND OUTSIDE TO REMOVE ALL ROUGH EDGES ON NONMETALLIC CONDUIT. (SEE NEC 347.5)

WHEN REQUIRED TO CONNECT NONMETALLIC CONDUIT TO METALLIC CONDUIT, ONLY U.L. LISTED ADAPTER FITTINGS SHALL BE USED.

PRIOR TO CONDUIT ACCEPTANCE, CONDUIT CAPS OR PLUGS SHALL BE REMOVED, AND THE CAPS, PLUGS AND CONDUIT ENDS SHALL BE THOROUGHLY CLEANED AND THEN THE CAPS OR PLUGS REINSTALLED TO ENSURE THAT THE CAPS OR PLUGS CAN BE EASILY REMOVED IN THE FUTURE.

ALL CONDUIT BEING FURNISHED AND INSTALLED SHALL HAVE THE U.L. LABEL FIRMLY ATTACHED.

CONDUIT RUNS SHALL BE THE SAME SIZE OF CONDUIT FROM ONE END TO THE OTHER (FROM PULL BOX TO PULL BOX-OR-JUNCTION BOX TO JUNCTION BOX-OR-BASE TO BASE, ETC.).

POLY ROPE OR A PULL WIRE SHALL BE INSTALLED AS STATED IN THE STANDARD SPECIFICATION, ITEM 652.3.1.1.

ALL CONDUIT RUNS SHALL BE STRAIGHT (WITHOUT BENDS) FROM PULL BOX TO PULL BOX, PULL BOX TO BASE AND BASE TO BASE AS SHOWN ON THE PLANS.

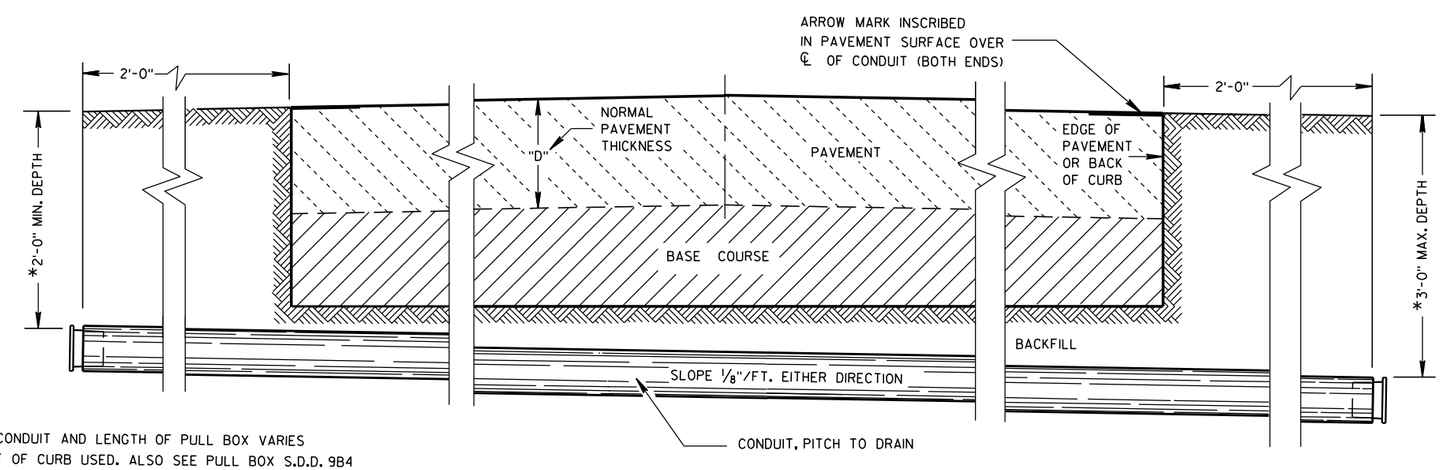

*DEPTH OF CONDUIT AND LENGTH OF PULL BOX VARIES WITH HEIGHT OF CURB USED. ALSO SEE PULL BOX S.D.D. 9B4

SIDE ELEVATION

DETAIL FOR CONDUIT UNDER PAVED HIGHWAYS

CONDUIT

STATE OF WISCONSIN
DEPARTMENT OF TRANSPORTATION

APPROVED

10/23/03 — DATE

/S/ Balu Ananthanarayanan — STATE ELECTRICAL ENGI

FHWA — HWYS

TABLE OF NOMINAL DIMENSIONS AND WEIGHTS

DIMENSION IN INCHES		CORRUGATED STEEL PIPE								
PIPE DIAMETER (INSIDE)	A	12	12	12	18	18	18	24	24	24
PIPE LENGTH **	B	24	30	36	24	30	36	36	42	48
WALL THICKNESS	C	0.064	0.064	0.064	0.064	0.064	0.064	0.064	0.064	0.064
COVER	D	10 1/4	10 1/4	10 1/4	16 1/4	16 1/4	16 1/4	22 1/4	22 1/4	22 1/4
FRAME	E	14 1/2	14 1/2	14 1/2	20 1/2	20 1/2	20 1/2	26 1/2	26 1/2	26 1/2
FRAME	F	8 1/2	8 1/2	8 1/2	14 1/2	14 1/2	14 1/2	20 1/2	20 1/2	20 1/2
FRAME	G	11 1/2	11 1/2	11 1/2	17 1/2	17 1/2	17 1/2	23 1/2	23 1/2	23 1/2
WEIGHT IN POUNDS *										
FRAME AND COVER		60	60	60	110	110	110	155	155	155

* THE ACTUAL WEIGHT OF THE MANHOLE FRAME AND COVER MAY VARY WITHIN 5 PERCENT PLUS OR MINUS OF THE WEIGHTS SHOWN.

** NORMALLY USED LENGTHS. THE PROJECT ENGINEER SHALL DETERMINE IF PIPE LENGTHS, OTHER THAN THOSE SPECIFIED, SHALL BE USED, TO A MAXIMUM OF 48" (CONTINUOUS LENGTH, NON-SPLICED). THE ADDITIONAL LENGTH SHALL BE INCIDENTAL TO THE PULL BOX BID PRICE.

GENERAL NOTES

DETAILS OF CONSTRUCTION, MATERIALS AND WORKMANSHIP NOT SHOWN ON THIS DRAWING SHALL CONFORM TO THE PERTINENT REQUIREMENTS OF THE CONTRACT.

ALL FRAMES AND COVERS SHALL BE HEAVY DUTY TYPE, SUITABLE FOR VEHICULAR TRAFFIC LOADS.

PULL BOXES LOCATED IN THE ROADWAYS SHALL HAVE LOCKING COVERS.

ENTRANCE HOLES INTO PULL BOXES SHALL BE CUT WITH A CIRCULAR HOLE SAW OR HYDRAULIC CONDUIT PUNCH. HOLE SIZE SHALL BE THE OUTSIDE DIAMETER OF THE CONDUIT THAT IS TO FIT IN THE OPENING PLUS NO MORE THAN 1/4".

THE CONTRACTOR SHALL NOT INSTALL WIRE IN ANY PULL BOX UNTIL ITS INSTALLATION HAS BEEN INSPECTED AND ACCEPTED BY THE ENGINEER.

GROUNDING LUGS (MECHANICAL CONNECTORS) SHALL BE U.L. LISTED AND APPROVED FOR USE WITH COPPER WIRE. THE MECHANICAL CONNECTION (INSIDE AND OUTSIDE) TO THE PULL BOX, SHALL BE TOTALLY AND PERMANENTLY SEALED WITH A SILICONE OR RUBBERIZED CAULKING COMPOUND AS APPROVED BY THE ENGINEER.

GROUNDING LUGS ARE NOT REQUIRED IN PULL BOXES WHEN VOLTAGES OF LESS THAN 50 VOLTS AC ARE THE ONLY VOLTAGES ENCOUNTERED IN THE BOXES.

ALL METALLIC CONDUIT IN WHICH WIRE AND/OR CABLE IS TO BE INSTALLED, SHALL BE BUSHED BEFORE INSTALLATION OF THE WIRE AND/OR CABLE.

S.D.D. 9B2, "CONDUIT", APPLIES TO THIS DRAWING.

WHEN PULL BOXES ARE INSTALLED FOR FUTURE USE, DO NOT INSTALL THE EQUIPMENT GROUNDING LUG. THE EQUIPMENT GROUNDING LUG, THE EQUIPMENT GROUNDING ELECTRODE AND THE EQUIPMENT GROUNDING CONDUCTOR SHALL BE REQUIRED AND INSTALLED UNDER A FUTURE WIRING CONTRACT.

IF PULL BOX EQUIPMENT GROUNDING IS REQUIRED USING AN EQUIPMENT GROUNDING ELECTRODE IN EACH PULL BOX, THE EQUIPMENT GROUNDING ELECTRODE SHALL BE 5/8" X 8'-0", COPPERCLAD AND BE EXOTHERMICALLY WELDED TO A #4 AWG, COPPER, STRANDED WIRE (BARE OR GREEN INSULATED). THE #4 AWG WIRE SHALL BE 4 FEET IN LENGTH, NEATLY COILED, TAPED AND AVAILABLE FOR USE WHEN REQUIRED.

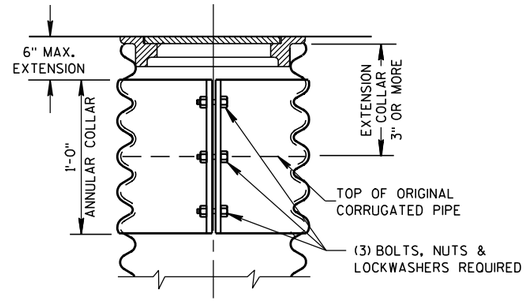

CORRUGATED PIPE EXTENDER

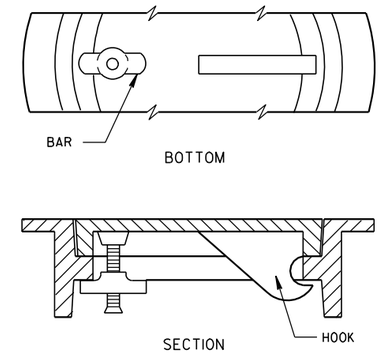

ALTERNATE COVER (LOCKING)

TIGHTENING BAR TYPE

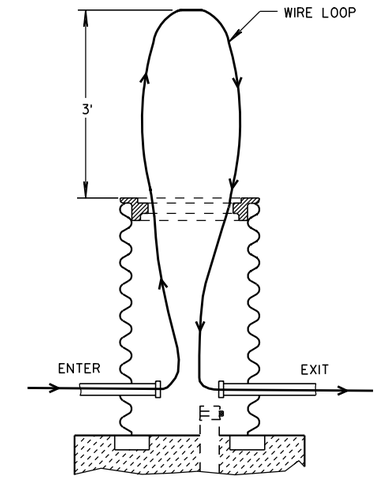

MEASUREMENT DETAIL FOR WIRE/CABLE IN THE PULL BOX

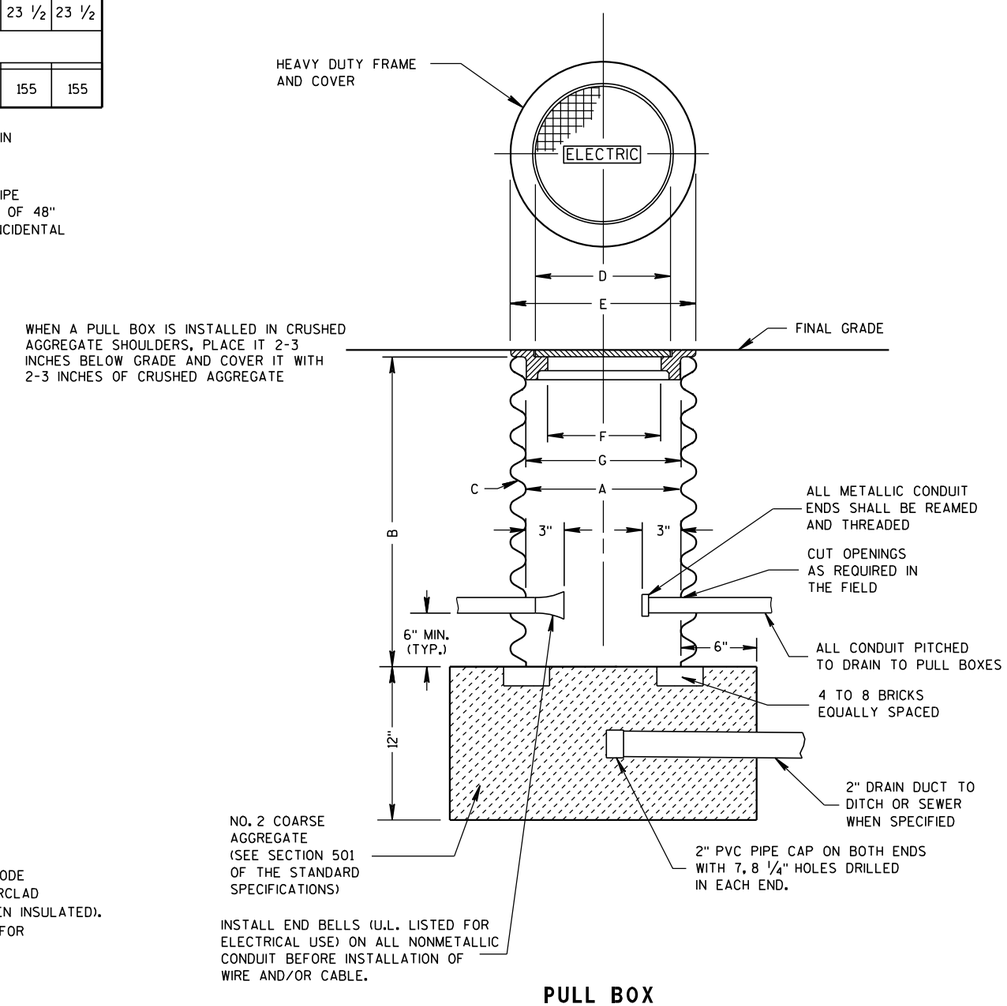

PULL BOX

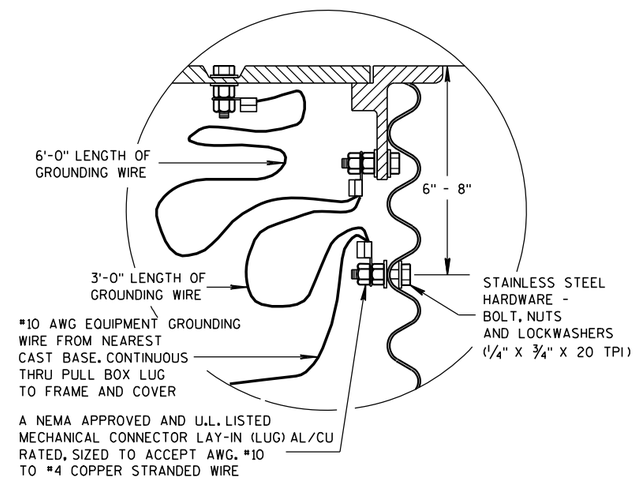

EQUIPMENT GROUNDING LUG AND LOCATION IN STEEL PULL BOXES

PULL BOX

STATE OF WISCONSIN
DEPARTMENT OF TRANSPORTATION

APPROVED
9/27/06 — DATE
/S/ Balu Ananthanarayanan — STATE ELECTRICAL ENGI
HWYS
FHWA

6

S.D.D. 9 B 4-9

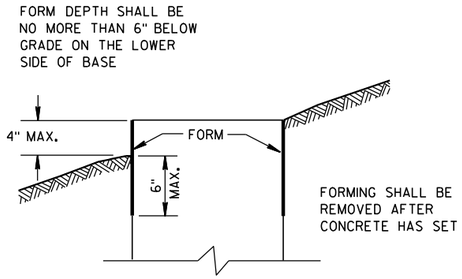

FORMING DETAIL

QUANTITY REQUIREMENTS	CONCRETE BASE TYPE		
	1	2	5
APPROX. CUBIC YARDS OF CONCRETE	0.40	0.57	0.40
LBS. OF HOOP BAR STEEL	NONE	23	16
LBS. OF VERTICAL BAR STEEL	NONE	60	18

GENERAL NOTES

DETAILS OF CONSTRUCTION, MATERIALS AND WORKMANSHIP NOT SHOWN ON THIS DRAWING SHALL CONFORM TO THE PERTINENT REQUIREMENTS OF THE CONTRACT.

BASES SHALL BE EXCAVATED BY USE OF A CIRCULAR AUGER.

TOP SURFACES OF CONCRETE BASES SHALL BE TROWEL FINISHED SMOOTH AND LEVEL.

CONDUIT SIZES AND LOCATIONS SHALL BE AS SHOWN ON THE PLANS.

THE FINAL OR TERMINATING CONCRETE BASE IN A CONDUIT RUN SHALL HAVE A 6" EXIT STUB INSTALLED FOR FUTURE CABLING USE. THE EXIT STUB SHALL BE SIZED AS USED THROUGHOUT THE CONDUIT RUN AS SHOWN AT THE ENTRANCE OF THE BASE.

MINIMUM BENDING RADIUS OF CONDUIT IS EQUAL TO 6 X THE DIAMETER.

CONDUIT HEIGHT ABOVE CONCRETE BASES SHALL BE 1 INCH. ALL METALLIC CONDUIT ENDS SHALL BE REAMED AND THREADED.

ALL CONDUIT ENDS AT THE TOP OF CONCRETE BASES SHALL BE CAPPED IF METALLIC OR PLUGGED IF NONMETALLIC IMMEDIATELY AFTER PLACEMENT AND BEFORE CONCRETE IS POURED. CONDUITS IN WHICH WIRE OR CABLE IS NOT INSTALLED SHALL REMAIN CAPPED OR PLUGGED.

GENERAL NOTES (CONTINUED)

BELL ENDS SHALL BE INSTALLED ON ALL PVC CONDUIT EXPOSED AT THE TOP OF CONCRETE BASES BEFORE INSTALLATION OF CABLE OR WIRE.

ENDS OF CONDUIT INSTALLED BELOW GRADE FOR FUTURE USE SHALL BE CAPPED IF METALLIC OR PLUGGED IF NONMETALLIC.

WHEN REQUIRED TO CONNECT NONMETALLIC CONDUIT TO METALLIC CONDUIT, ONLY ADAPTER FITTINGS, U.L. LISTED FOR ELECTRICAL USE, SHALL BE USED.

IF A BASE REQUIRES A DEEP FORM BECAUSE OF LOOSE DIRT OR FILL, THE FORM SHALL BE REMOVED BEFORE BACKFILLING AROUND THE BASE. BACKFILL SHALL BE TAMPED TIGHT AGAINST THE BARE CONCRETE BASE IN LAYERS OF 1 FOOT OR LESS.

A NO. 4 AWG, STRANDED COPPER EQUIPMENT GROUNDING CONDUCTOR SHALL BE EXOTHERMICALLY WELDED TO THE EQUIPMENT GROUNDING ELECTRODE (GROUND ROD) FOR TYPE 2 AND TYPE 5 BASES.

THE EQUIPMENT GROUNDING CONDUCTOR SHALL BE FURNISHED AND INSTALLED TO ENTER THE BASE OF THE TYPE 2 AND TYPE 5 BASES THROUGH A 1 INCH CONDUIT INSTALLED FOR GROUNDING PURPOSES, LEAVING A 4 FOOT COIL OF WIRE ABOVE THE CONCRETE BASE. THE EQUIPMENT GROUNDING CONDUCTOR SHALL BE NEATLY COILED AND THE COILS TIED TOGETHER.

ANCHOR RODS SHALL BE THREADED 12" IN LENGTH ON EACH END OF THE ROD. ANCHOR RODS SHALL BE MANUFACTURED IN ACCORDANCE WITH SECTION 654.2.1 AND 641.2.2 OF THE STANDARD SPECIFICATIONS, ASTM A-449, OR ASTM A-687 (GRADE 105).

WASHERS AND LOCK WASHERS ARE REQUIRED ON ALL ANCHOR RODS.

WHEN ANCHOR RODS USING THE ALTERNATE "L" BEND ARE FURNISHED, THE 4" "L" BEND SHALL BE IN ADDITION TO THE SPECIFIED ANCHOR ROD BAR LENGTH. THE "L" BEND END SHALL NOT BE THREADED.

ANCHOR RODS SHALL BE INSTALLED WITH MISALIGNMENTS OF LESS THAN 1:40 FROM VERTICAL.

WELDING OF THE ANCHOR RODS TO THE CAGE IS UNACCEPTABLE. TIE WIRES SHALL BE USED.

BAR STEEL REINFORCEMENT SHALL BE COATED WITH POWDERED EPOXY RESIN IN ACCORDANCE WITH SECTION 505 OF THE STANDARD SPECIFICATIONS (LATEST EDITION).

(1) THE MINIMUM DEPTH OF CONDUIT EXITING THE CONCRETE BASE AND INSTALLED BELOW THE TRAVELED WAY SHALL BE 24 INCHES. THE MINIMUM DEPTH OF CONDUIT EXITING THE CONCRETE BASE THAT IS NOT INSTALLED BELOW THE TRAVELED WAY SHALL BE 18 INCHES. THE MAXIMUM DEPTH OF ALL CONDUIT SHALL BE 36 INCHES EXCEPT WITH WRITTEN APPROVAL BY THE ENGINEER.

(2) (4) 1" DIA. X 3'-6" ANCHOR RODS.

(3) (4) 1" DIA. X 5'-0" ANCHOR RODS.

(4) (6) NO. 6 X 6'-8" BAR STEEL REINFORCEMENT.

(5) (7) NO. 4 X 5'-1" BAR STEEL REINFORCEMENT @ 1'-0" C-C.

(6) (4) 1" DIA. X 3'-6" ANCHOR RODS.

(7) (6) NO.4 X 4'-8" BAR STEEL REINFORCEMENT.

(8) (5) NO. 4 X 5'-1" BAR STEEL REINFORCEMENT @ 1'-0" C-C.

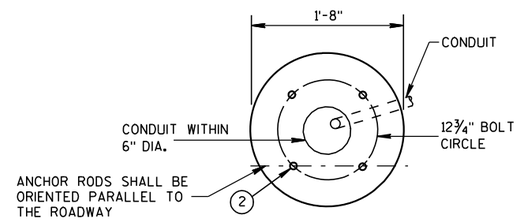

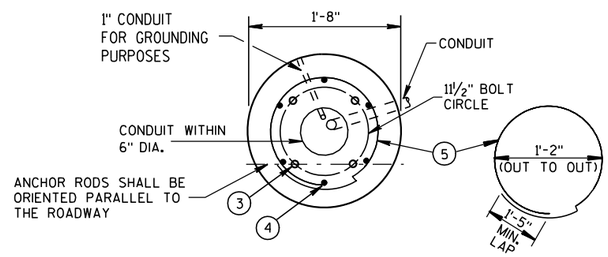

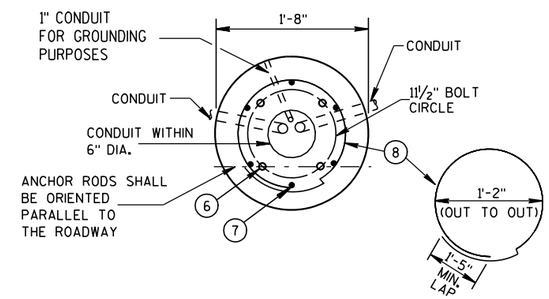

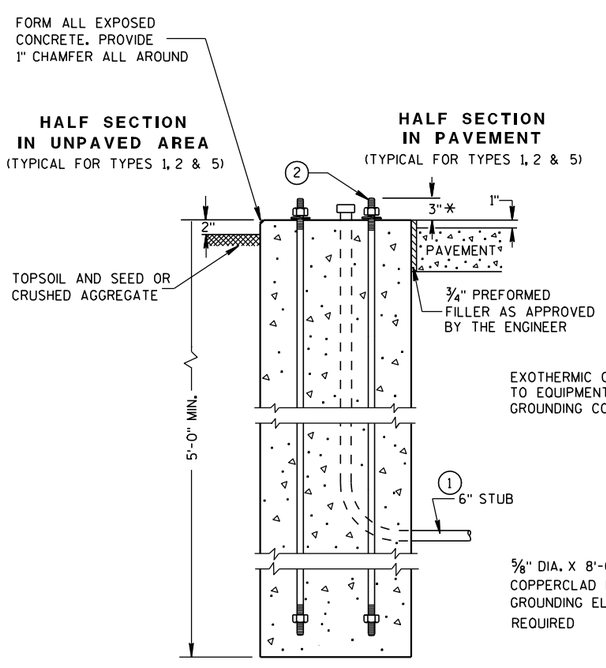

TYPE 1

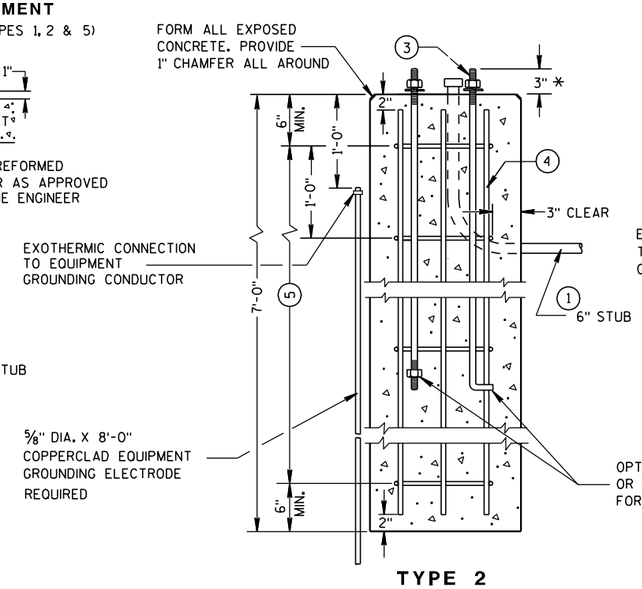

TYPE 2

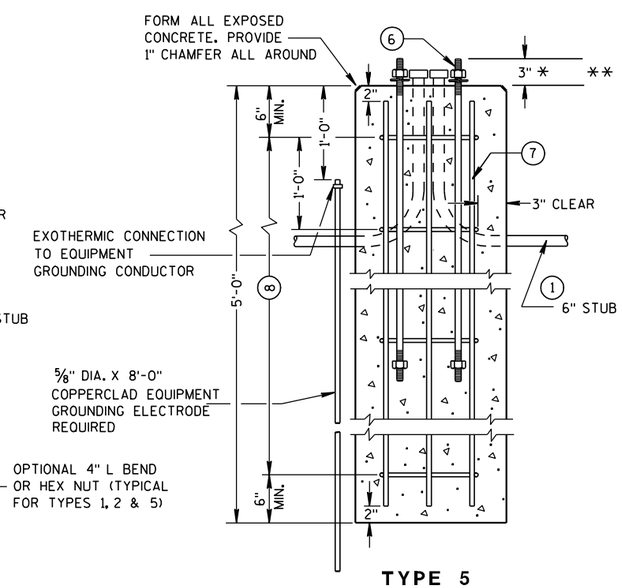

TYPE 5

CONCRETE BASES

* ANY ANCHOR ROD PROJECTION SHORTER THAN 2¾" OR LONGER THAN 3¼" SHALL REQUIRE THE BASE TO BE REMOVED AND REPLACED AT THE CONTRACTORS EXPENSE.

** FOR NONBREAKAWAY INSTALLATIONS, 4½" ± ANCHOR ROD PROJECTION WITH THE USE OF LEVELING NUTS. RODENT SCREEN REQUIRED.

CONCRETE BASES, TYPES 1, 2 & 5

STATE OF WISCONSIN
DEPARTMENT OF TRANSPORTATION

APPROVED
3/3/10 — DATE
/S/ Joanna L. Rush — STATE ELECTRICAL ENGI
HWYS
FHWA

6

S.D.D. 9 C 2-6

GENERAL NOTES

DETAILS OF CONSTRUCTION, MATERIALS AND WORKMANSHIP NOT SHOWN ON THIS DRAWING SHALL CONFORM TO THE PERTINENT REQUIREMENTS OF THE CONTRACT.

FOUR (4) BOLTS SHALL BE FURNISHED WITH EACH TRANSFORMER BASE. BOLTS SHALL BE 1" DIAMETER, 4" IN LENGTH, WITH WASHERS, LOCK WASHERS AND NUTS. BOLTS, NUTS AND WASHERS SHALL BE MANUFACTURED IN ACCORDANCE WITH SECTION 641.2.2 OF THE STANDARD SPECIFICATIONS, ASTM A-325, (92,000 YIELD) HEAVY HEX NUT AND BE GALVANIZED IN ACCORDANCE WITH ASTM A-153, CLASS C.

LEVELING SHIMS, IF NEEDED, SHALL BE DESIGNED FOR THE PURPOSE AND USED UNDER CAST BASES WHEN PLUMBING POLES OR STANDARDS DURING INSTALLATION. THE USE OF WASHERS IN LIEU OF PROPER LEVELING SHIMS IS NOT ACCEPTABLE.

SHIM LENGTH SHALL BE LONG ENOUGH TO COMPLETELY COVER THE AREA UNDER THE LENGTH AND WIDTH OF THE BASE MOUNTING FLANGE.

DOUBLE NUTTING IS NOT ACCEPTABLE FOR LEVELING OR MOUNTING PURPOSES.

A NEMA APPROVED AND U.L. LISTED MECHANICAL CONNECTOR (LUG) AL/CU RATED AND SIZED TO ACCEPT #10 AWG STRANDED WIRE, SHALL BE FURNISHED AND INSTALLED IN THE PEDESTAL AND TRANSFORMER BASES.

THE MECHANICAL CONNECTOR SHALL BE INSTALLED USING A 1/4" - 20 (TPI) STAINLESS STEEL HEX HEAD BOLT OF SUFFICIENT LENGTH TO FIRMLY ATTACH THE LUG TO THE BASE.

SHOULD THE MANNER OF ATTACHMENT OF THE LUG REQUIRE WASHERS, HEX NUTS, LOCK WASHER - THEY SHALL BE STAINLESS STEEL AS IS THE BOLT. THE MANNER OF ATTACHMENT SHALL NOT BLOCK ACCESSIBILITY TO WIRE PLACEMENT IN THE CONNECTOR.

PEDESTAL BASE COLLAR THREADING SHALL BE TAPERED AND IN ACCORDANCE WITH NATIONAL PIPE THREADING DIMENSIONS.

BASE COLLAR THREADING SHALL EXTEND INTO THE BASE COLLAR WITH SUFFICIENT DEPTH TO ACCEPT THE INSTALLATION OF TRAFFIC SIGNAL STANDARDS TO A DEPTH OF 1 1/2", THEN TIGHTENING TO A POINT OF BEING IMMOVABLE.

THE ACCESS DOOR SHALL BE OF THE SAME MATERIAL AS THE BASE.

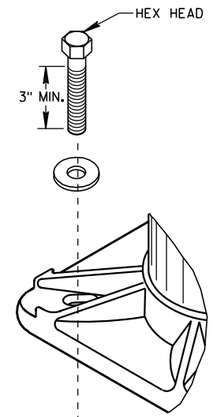

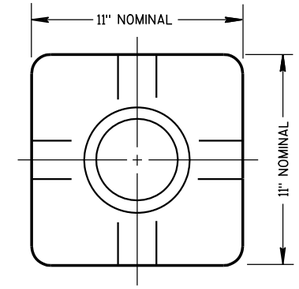

TOP VIEW
(PEDESTAL BASE)

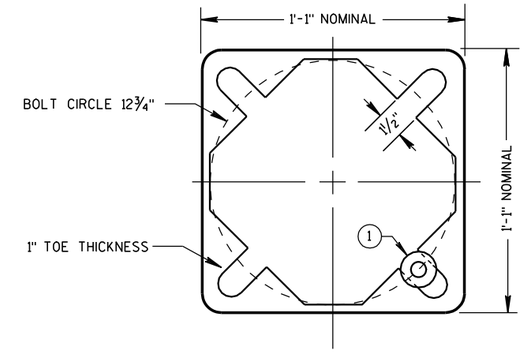

BOTTOM VIEW
(PEDESTAL BASE)

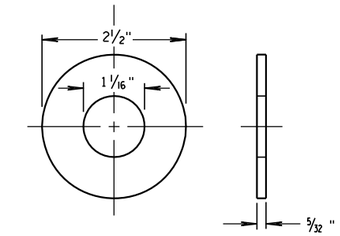

ZINC COATED STEEL WASHER
TO BE PROVIDED BY THE CONTRACTOR

PEDESTAL BASE WASHER (1)

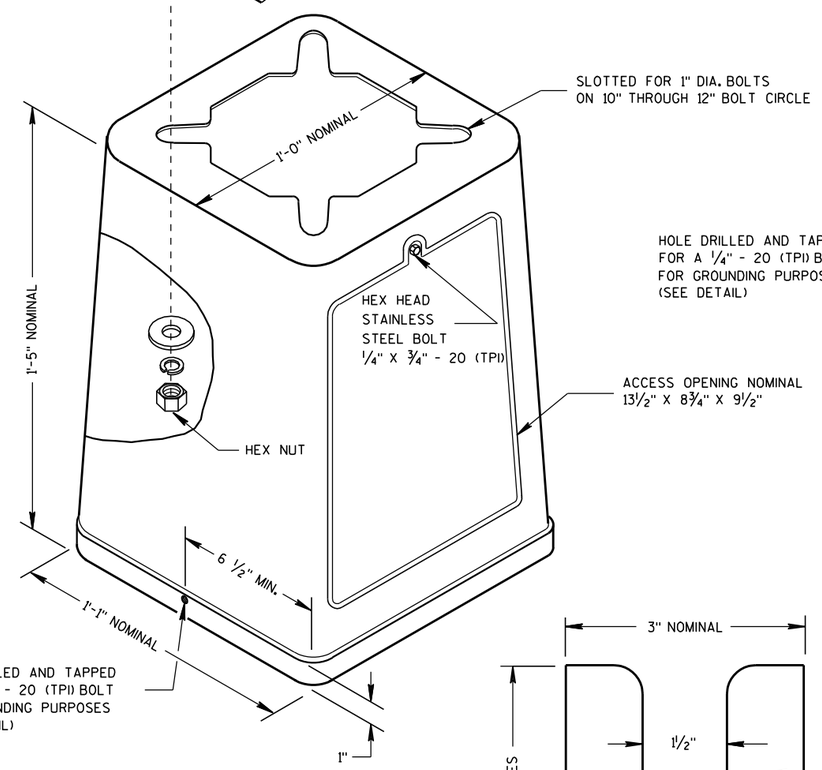

ISOMETRIC VIEW

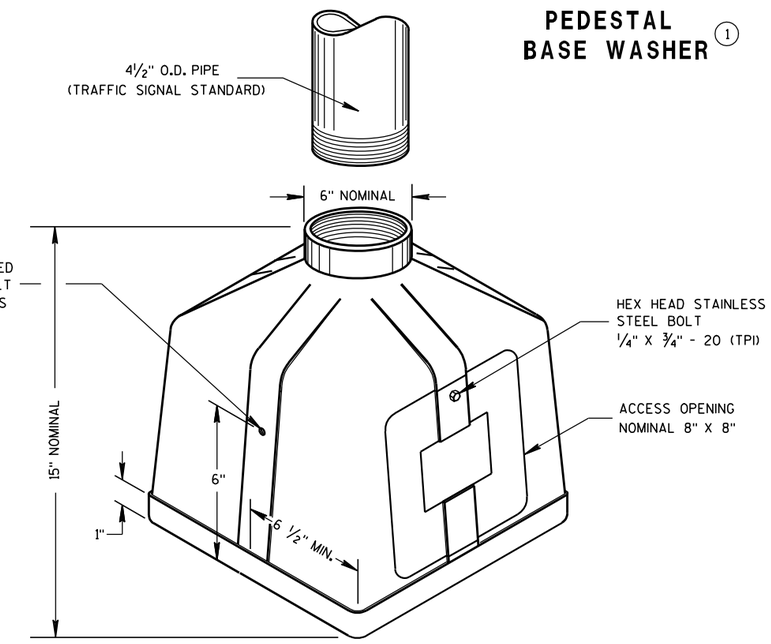

ISOMETRIC VIEW
PEDESTAL BASE

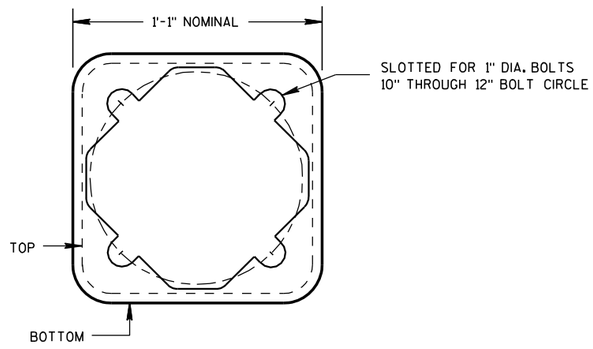

BOTTOM VIEW
(TRANSFORMER BASE)

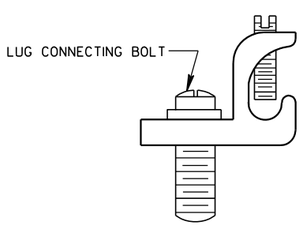

TYPICAL MECHANICAL CONNECTOR LUG

TO BE FURNISHED WITH EACH BASE

TRANSFORMER BASE

INTENDED FOR USE WITH TYPE 2, 3, 4, 5 & 6 POLES

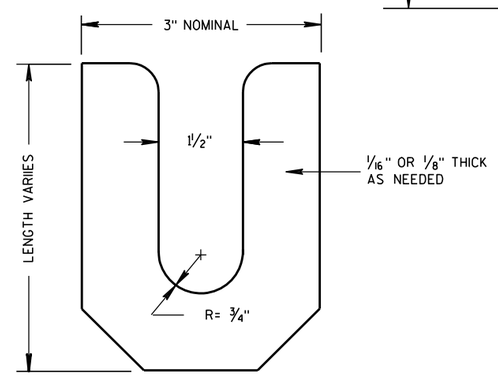

LEVELING SHIM

TRANSFORMER/PEDESTAL BASES	
STATE OF WISCONSIN DEPARTMENT OF TRANSPORTATION	
APPROVED 10/27/09 DATE	/S/ Joanna L. Pruitt STATE ELECTRICAL ENGI 128 HWYS
FHWA	

6

6

S.D.D. 9 C 3-3

S.D.D. 9 C 3-3

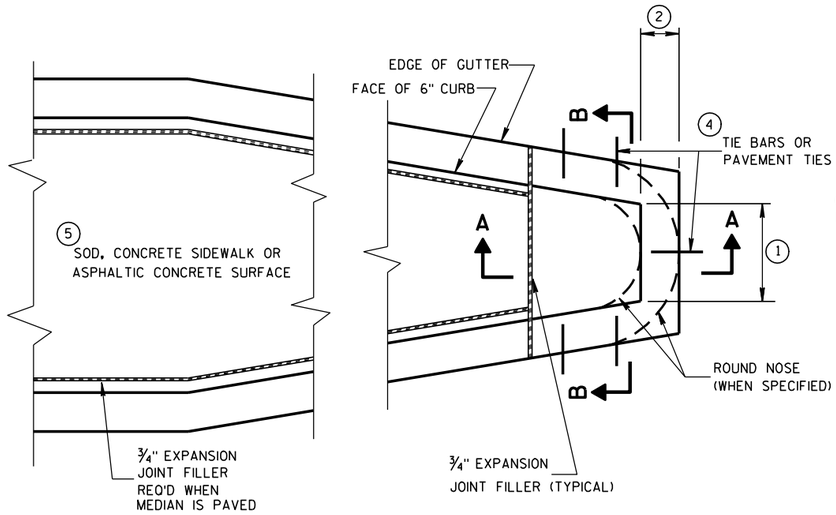

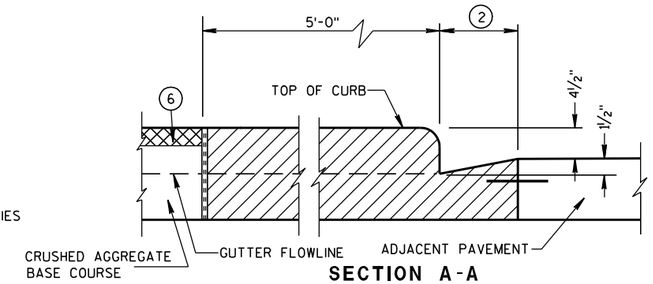

SECTION A-A

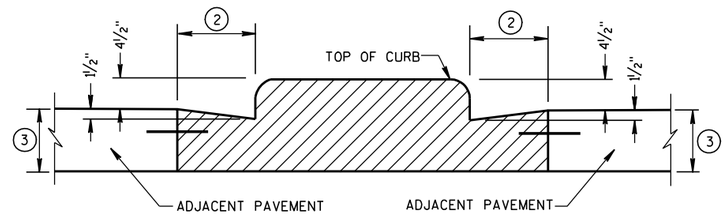

SECTION B-B

CONCRETE MEDIAN BLUNT NOSE DETAIL

GENERAL NOTES

DETAILS OF CONSTRUCTION, MATERIALS AND WORKMANSHIP NOT SHOWN ON THIS DRAWING SHALL CONFORM TO THE PERTINENT REQUIREMENTS OF THE STANDARD SPECIFICATIONS AND THE APPLICABLE SPECIAL PROVISIONS.

1. SEE PLAN FOR MEDIAN NOSE WIDTH AND RADIUS (FOR ROUND NOSE ALTERNATE).
2. WIDTH OF GUTTER TO MATCH EXISTING ADJACENT GUTTER OR AS SPECIFIED ELSEWHERE IN THE PLAN.
3. DEPTH EQUAL TO ADJACENT PAVEMENT. ADJACENT PAVEMENT STRUCTURE DETAILS ARE SHOWN ON THE PLAN. TYPICAL OPTIONS ARE:
   (1) NEW OR EXISTING CONCRETE PAVEMENT.
   (2) ASPHALTIC CONCRETE PAVEMENT OVER NEW OR EXISTING CONCRETE BASE COURSE.
   (3) ASPHALTIC CONCRETE PAVEMENT OVER CRUSHED AGGREGATE BASE COURSE.
4. TIE BARS OR PAVEMENT TIES REQUIRED IN NEW CONCRETE PAVEMENT OR CONCRETE BASE COURSE. TIE BARS SHALL BE NO. 4 X 2'-0" SPACED AT 2'-0" C-C.

   PAVEMENT TIES REQUIRED IN EXISTING CONCRETE BASE COURSE. PAVEMENT TIES SHALL BE NO. 6 X 1'-0" SPACED AT 3'-0" C-C INSTALLED ON A HORIZONTAL SKEW OF 6:1. THE DIRECTION OF SKEW SHALL ALTERNATE AFTER EVERY ONE OR TWO BARS.
5. SURFACE TYPE AND DETAILS ARE SHOWN ELSEWHERE IN THE PLAN.

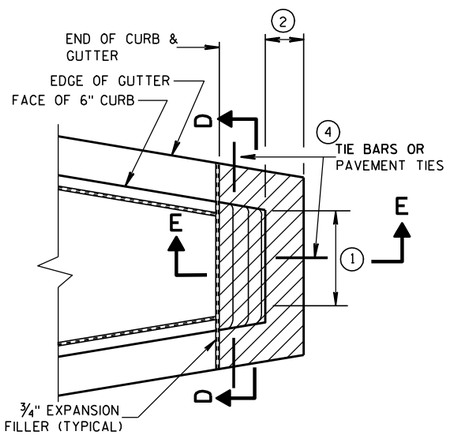

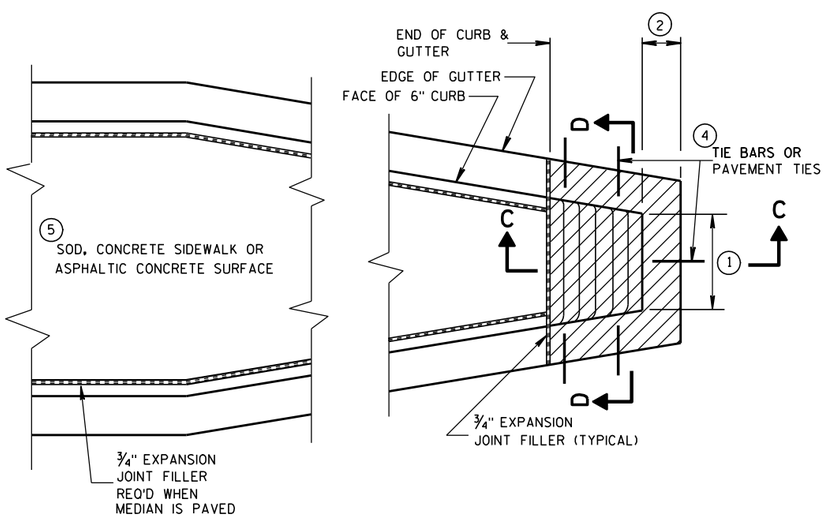

CONCRETE MEDIAN SLOPED NOSE TYPE 1

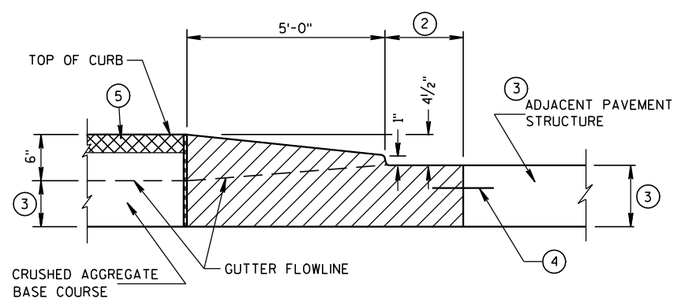

SECTION C-C

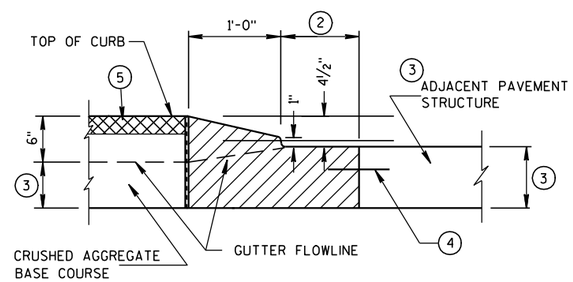

SECTION E-E

CONCRETE MEDIAN SLOPED NOSE TYPE 2

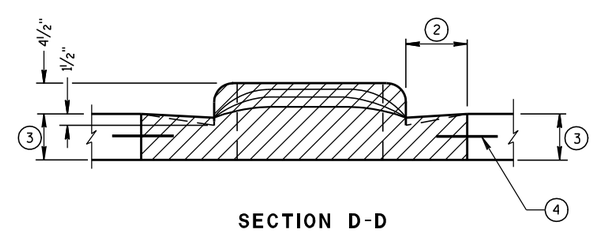

SECTION D-D

CONCRETE MEDIAN NOSE	
STATE OF WISCONSIN DEPARTMENT OF TRANSPORTATION	
APPROVED 6/8/2006 DATE	/S/ Jerry H. ---- ROADWAY STANDARDS ENGINEER
FHWA	NT

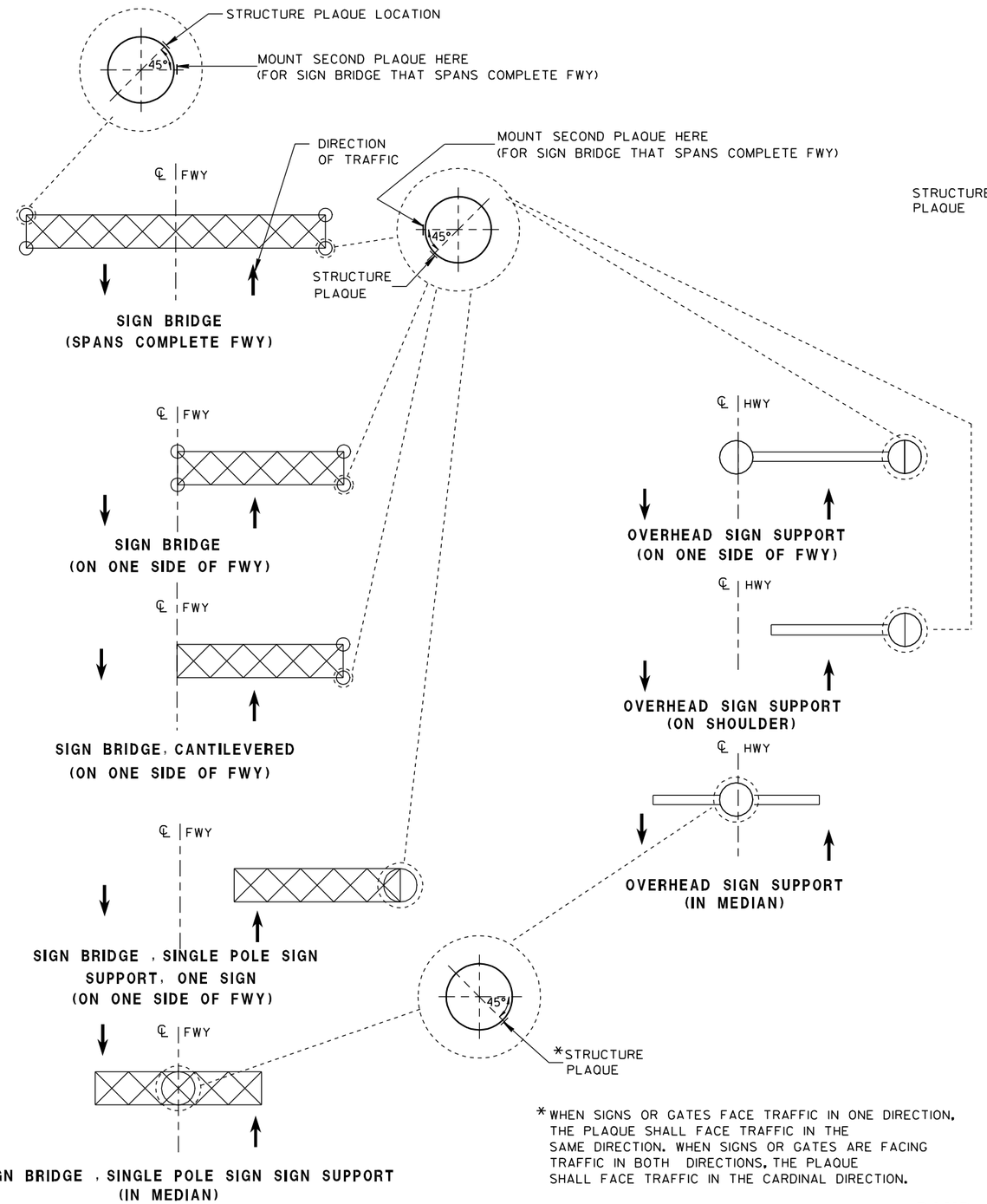

*WHEN SIGNS OR GATES FACE TRAFFIC IN ONE DIRECTION, THE PLAQUE SHALL FACE TRAFFIC IN THE SAME DIRECTION. WHEN SIGNS OR GATES ARE FACING TRAFFIC IN BOTH DIRECTIONS, THE PLAQUE SHALL FACE TRAFFIC IN THE CARDINAL DIRECTION.

LOCATION OF RAMP GATE, SIGN BRIDGE & OVERHEAD SIGN SUPPORT STRUCTURE PLAQUES

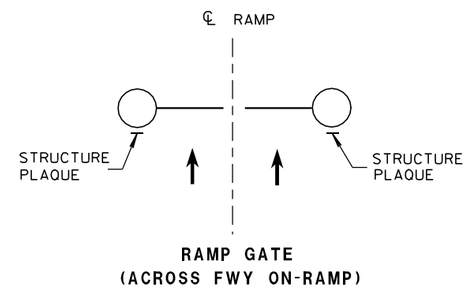

RAMP GATE
(ACROSS FWY ON-RAMP)

GENERAL NOTES

DETAILS OF CONSTRUCTION AND WORKMANSHIP NOT SHOWN IN THIS DRAWING SHALL CONFORM TO THE PERTINENT REQUIREMENTS OF THE CONTRACT.

PLAQUES SHALL BE INCIDENTAL TO ALL NEW INSTALLATIONS.

IF THE PROPOSED SIGN BRIDGE OR OVERHEAD SIGN SUPPORT IS REPLACING AN EXISTING SIGN BRIDGE OR OVERHEAD SIGN SUPPORT, A NEW IDENTIFICATION PLAQUE WILL BE REQUIRED.

FASTEN TOP, CENTER AND BOTTOM OF PLAQUE TO POLE OR OTHER LOCATION AS FOLLOWS:

GALVANIZED STEEL SHAFT - 3 STAINLESS STEEL POP RIVETS

A588 STEEL SHAFT - SHIM FOR DRAINAGE WITH STAINLESS WASHERS; FASTEN WITH STAINLESS SELF-TAPPING SCREWS

ALUMINUM SHAFTS - 3 ALUMINUM POP RIVETS

MOUNTING HEIGHT SHALL BE APPROXIMATELY 5.0' ABOVE CURB OR SHOULDER. ADJUST IF IT IS KNOWN THAT REQUIRED TRAFFIC SIGNS WILL OBSTRUCT.

PLAQUE MATERIALS:

BASE - SHEET ALUMINUM, 0.060" THICK.

FACE - WHITE, SELF-ADHESIVE VINYL SHEETING, NON-RETROREFLECTIVE

LINES - BLACK, ½" WIDE, SELF-ADHESIVE

CHARACTERS:- BLACK, SELF ADHESIVE, SERIES "D", SIZE AS SHOWN.

FOR SIGN BRIDGES, STRUCTURE MOUNTED, THE STRUCTURE PLAQUE SHALL BE MOUNTED HORIZONTALLY AS SHOWN ON THE DRAWING. THE STRUCTURE PLAQUE SHALL BE MOUNTED HORIZONTALLY TO THE BACK OF THE SIGN, BETWEEN THE ALUMINUM EXTRUSIONS, NEAR THE TOP LEFT HAND CORNER OF THE SIGN. THE BASE MATERIAL SHALL BE OMITTED AND THE FACE ADHERED DIRECTLY TO THE ALUMINUM SURFACE. PRIOR TO ADHERING THE MATERIAL, THE ALUMINUM SURFACE SHALL BE SMOOTH, CLEAN AND DRY.

WHERE SIGN BRIDGE ILLUMINATION IS PROVIDED, THE STRUCTURE MUST ALSO HAVE A SIGN BRIDGE CIRCUIT PLAQUE AS SHOWN IN THE ELECTRICAL DETAILS.

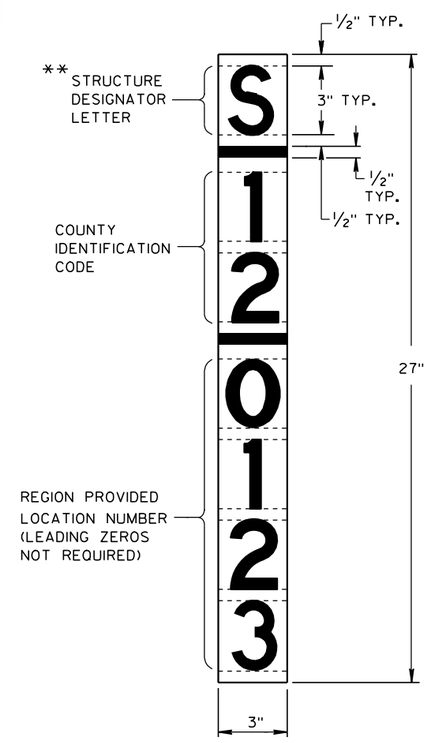

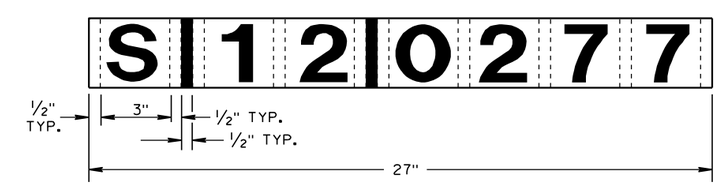

IDENTIFICATION PLAQUE FOR SIGN BRIDGE, STRUCTURE MOUNTED

** LETTER "G" UTILIZED FOR RAMP GATES.
LETTER "S" UTILIZED FOR SIGN BRIDGES AND OVERHEAD SIGN SUPPORTS.

RAMP GATE, SIGN BRIDGE AND OVERHEAD SIGN SUPPORT STRUCTURE PLAQUE FOR SIGN BRIDGES AND OVERHEAD SIGN SUPPORT WHICH ARE NOT STRUCTURE MOUNTED

STRUCTURE IDENTIFICATION PLAQUES, RAMP GATES, SIGN BRIDGES & OVERHEAD SIGN SUPPORT
STATE OF WISCONSIN DEPARTMENT OF TRANSPORTATION
APPROVED 1/9/2012 DATE — /S/ Thomas N. Notbohm STATE TRAFFIC ENGINEER — FHWA

GENERAL NOTES

DETAILS OF CONSTRUCTION SHOWN ON THIS DRAWING SHALL CONFORM TO THE PERTINENT REQUIREMENTS OF THE STANDARD SPECIFICATIONS AND APPLICABLE SPECIAL PROVISIONS.

RUMBLE STRIPS ON EXPRESSWAYS

DO NOT INSTALL RUMBLE STRIPS ACROSS SIDE ROAD INTERSECTIONS, COMMERCIAL DRIVEWAYS OR ADJACENT TO RIGHT TURN LANES, LEFT TURN LANES OR TURN LANE TAPERS. THE ATTACHED STANDARD DETAIL DRAWING SHOWS THE LOCATION OF THE RUMBLE STRIPS AT INTERCHANGE AREAS.

(1) CONCRETE PAVEMENT - RUMBLE STRIPS SHALL BE A MINIMUM OF 6" AWAY FROM TRANSVERSE JOINTS.

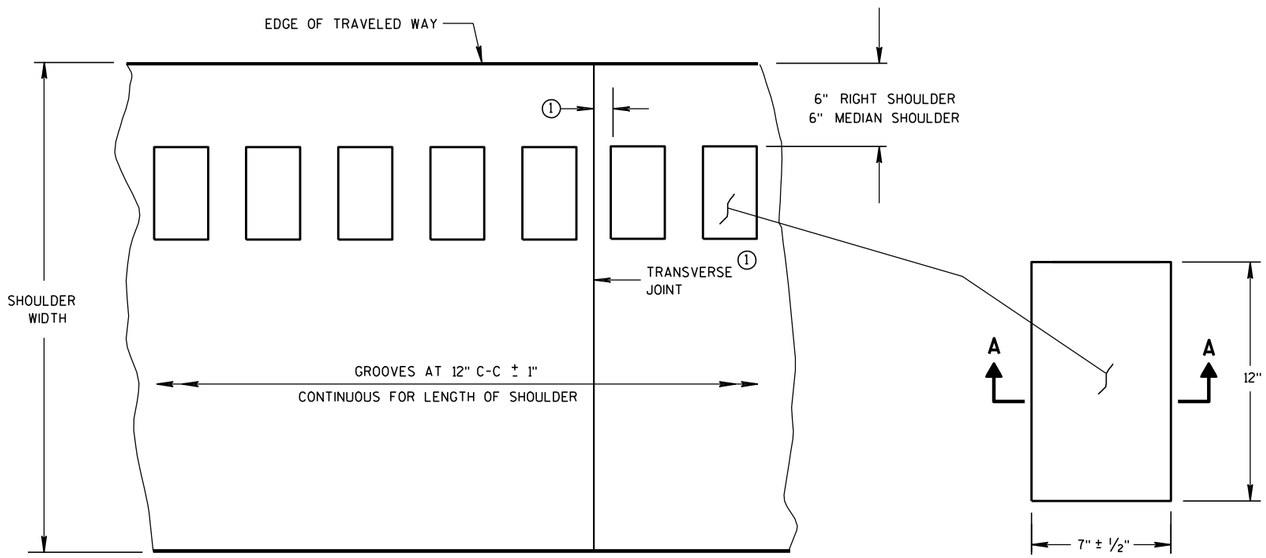

PLAN VIEW
SHOULDER WITH GROOVES

PLAN VIEW
(SINGLE GROOVE)

PLACEMENT DETAIL FOR MILLED RUMBLE STRIP

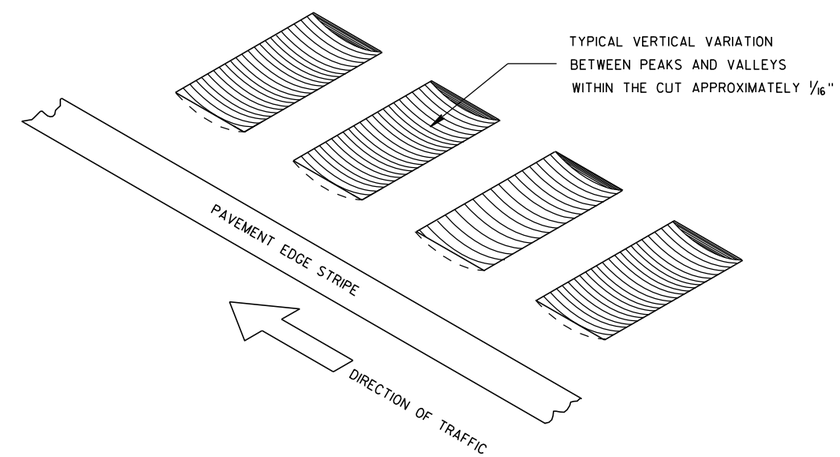

ISOMETRIC

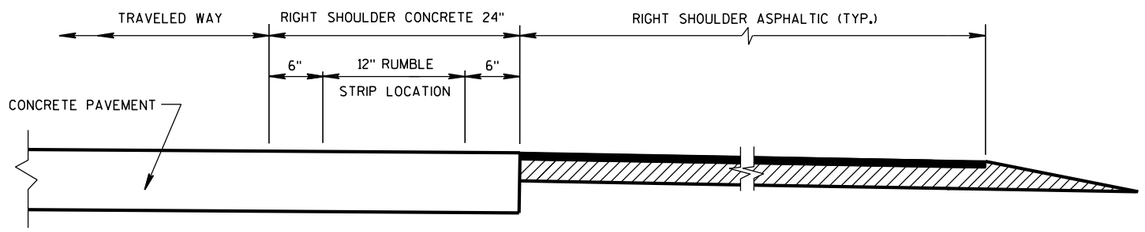

SECTION VIEW
CONCRETE PAVEMENT EXTENDS INTO RIGHT SHOULDER)

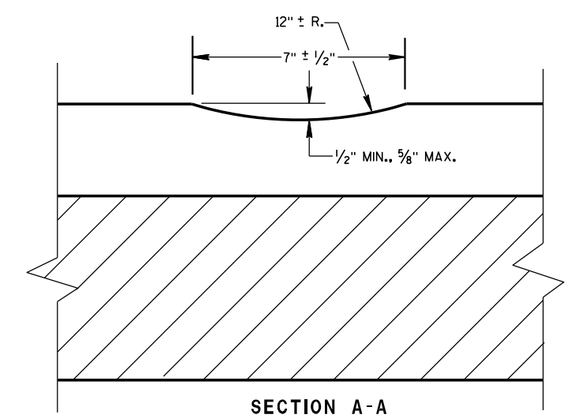

SECTION A-A

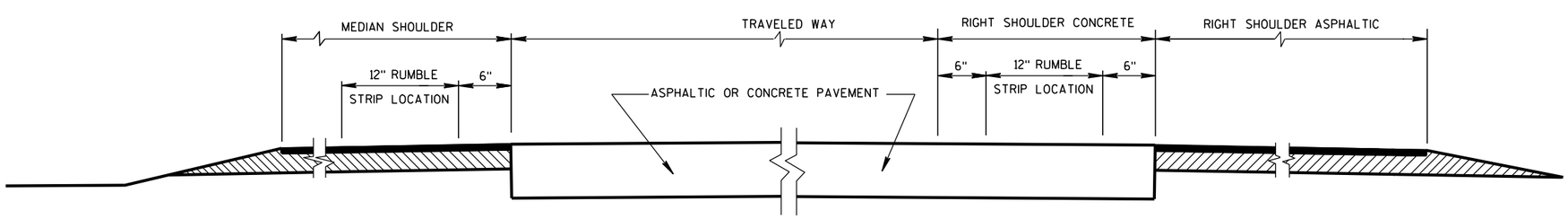

SECTION VIEW

TYPICAL LOCATIONS OF SHOULDER RUMBLE STRIPS
IN RURAL DIVIDED HIGHWAYS
(ONE ROADWAY IS SHOWN)

SHOULDER RUMBLE STRIP, MILLING

STATE OF WISCONSIN
DEPARTMENT OF TRANSPORTATION

6

6

S.D.D. 13 A 5-4a

S.D.D. 13 A 5-4a

NOTES:

NO RUMBLE STRIP ON EXIT, DIRECTIONAL, OR ENTRANCE RAMPS, EXCEPT NEAR THE ENTRANCE TAPER END AS SHOWN.

PAVEMENT MARKING DETAILS AND SPECIFICATIONS ARE PROVIDED ELSEWHERE IN THE CONTRACT.

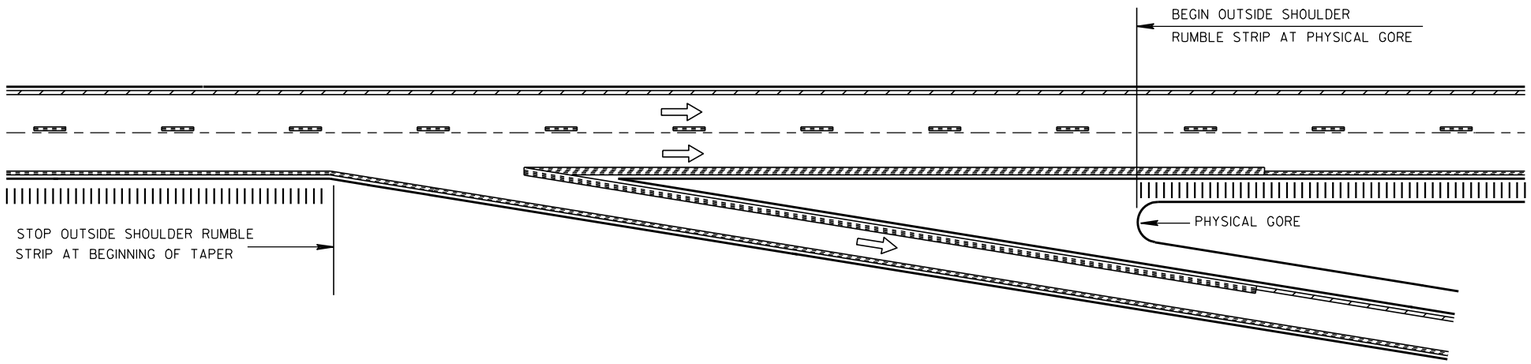

TYPICAL EXIT RAMP

NOTE:
ARROW SYMBOL (⇨)
SHOWS DIRECTION OF TRAVEL

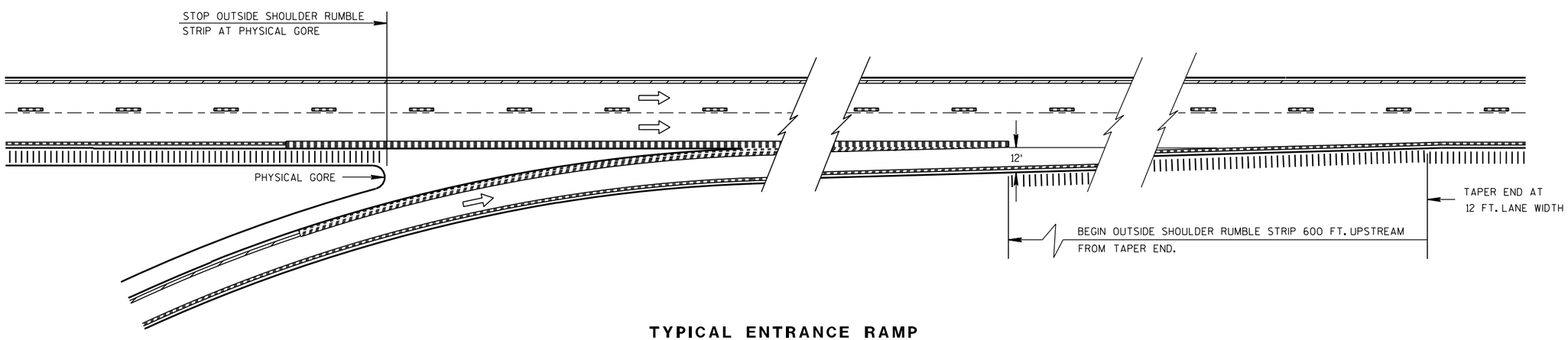

TYPICAL ENTRANCE RAMP

RAMP AND GORE RUMBLE STRIP LOCATIONS

SHOULDER RUMBLE STRIP, MILLING

STATE OF WISCONSIN
DEPARTMENT OF TRANSPORTATION

APPROVED

8/17/2011	/S/ Jerry H. Zogg	
DATE	ROADWAY STANDARDS ENGINEER	ENT

FHWA

6

S.D.D. 13 A 5-4b

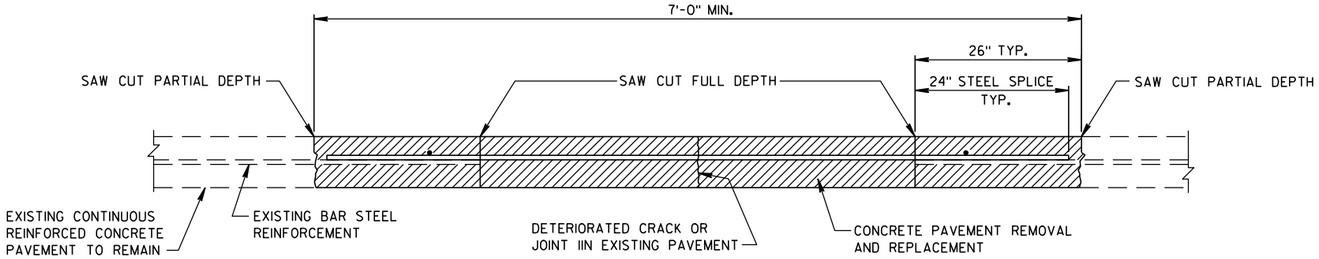

SECTION A-A

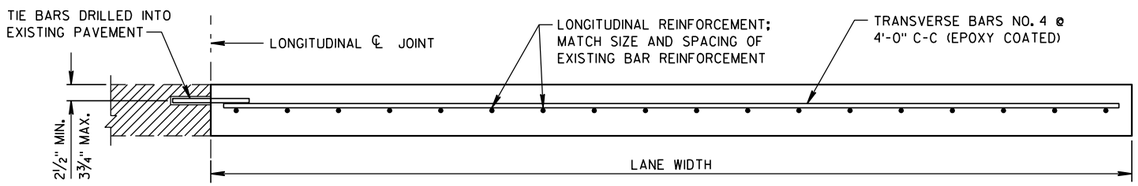

SECTION B-B

GENERAL NOTES

PLACE ALL BAR STEEL REINFORCEMENT AT MID PAVEMENT DEPTH UNLESS OTHERWISE NOTED.

PAY FOR THE TRANSVERSE AND LONGITUDINAL JOINT SAW CUT AS LINEAR FEET OF "SAWING CONCRETE".

WHEN THE PASSING AND TRAVELING LANES ARE TO BE REPLACED, REPLACE THE PASSING LANE FIRST.

ADD TRANSVERSE STEEL BARS TO REPAIRS GREATER THAN 6' IN LENGTH, USE NO. 4 BARS PLACED TRANSVERSELY AND SPACED 4' C-C. PAYMENT SHALL BE INCIDENTAL TO "CONCRETE PAVEMENT CONTINUOUS REINFORCEMENT".

TIE ALL CONCRETE PAVEMENT REPAIRS WHICH ARE GREATER THAN 15' IN LENGTH, AND ARE ADJACENT TO EXISING CONCRETE PAVEMENT, TO THE EXISTING PAVEMENT USING TIE BARS. DETAILS FOR TIE BAR CONSTRUCTION SHALL CONFORM TO THE STANDARD SPECIFICATIONS AND STANDARD DETAIL DRAWINGS.

① PROVIDE A MINIMUM DISTANCE OF 24 INCHES FROM AN EXISTING TRANSVERSE JOINT OR THE EDGE OF REPLACEMENT TO THE CENTER OF THE TIE BAR NEAREST THAT JOINT OR EDGE.

② ANCHOR TIE BARS INTO DRILLED HOLES WITH AN EPOXY.

③ SAW CUT THE LONGITUDINAL EDGE JOINT IF THE ADJACENT SHOULDER IS CONCRETE.

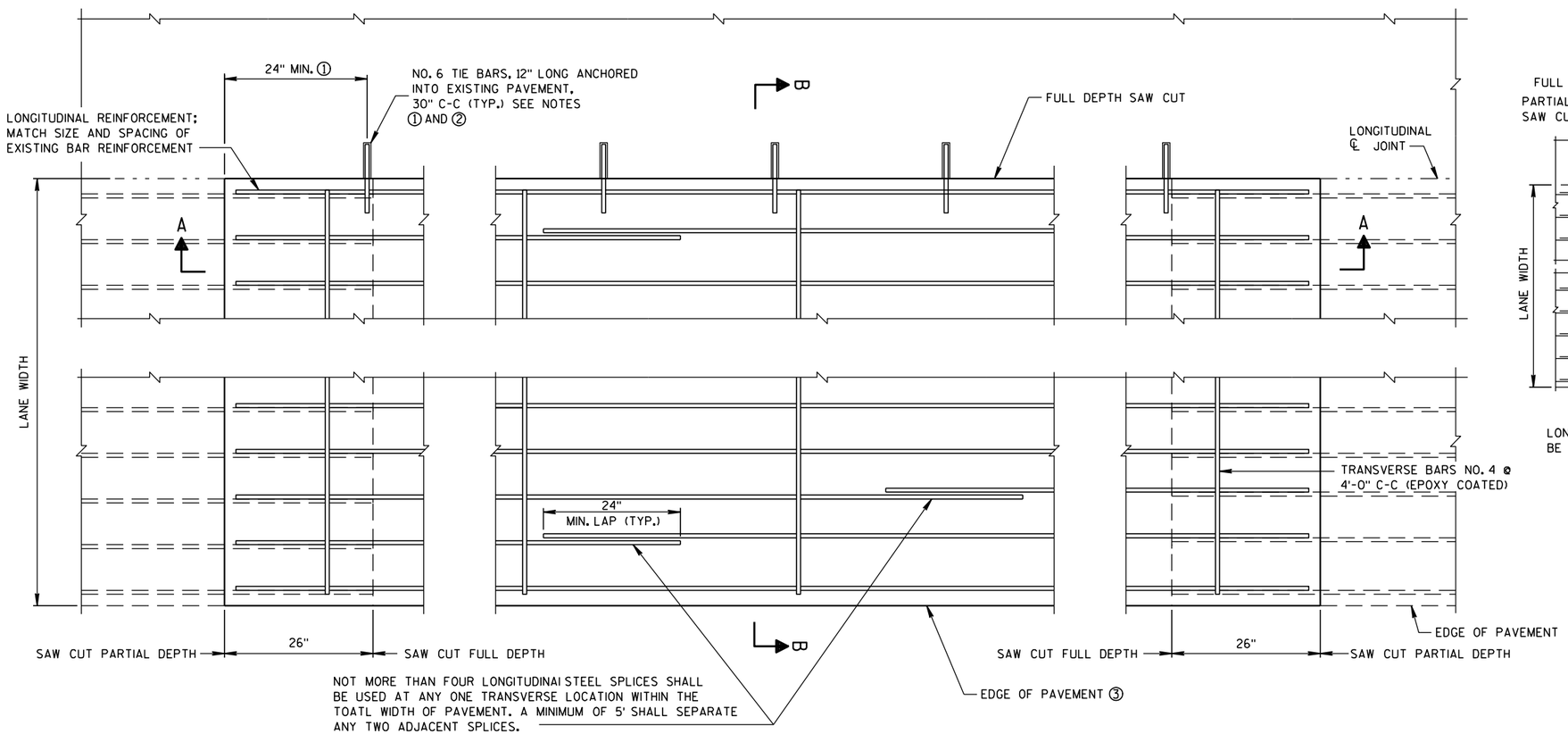

REINFORCEMENT STEEL PLACEMENT IN CONTINUOUSLY REINFORCED CONCRETE PAVEMENT REPLACEMENT

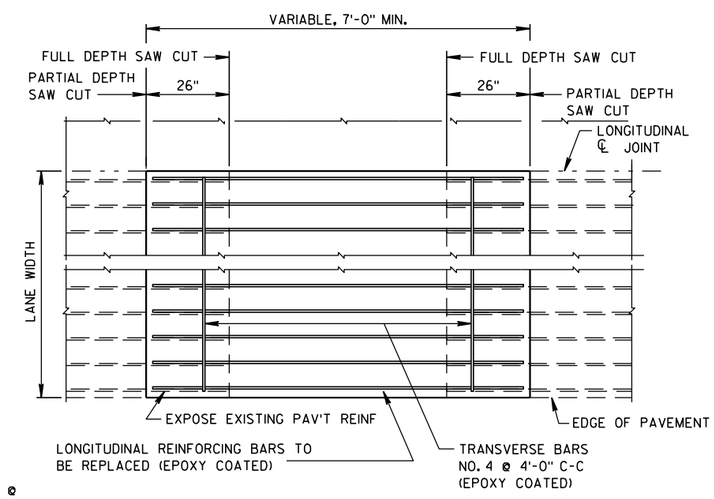

LONGITUDINAL STEEL PLACEMENT IN CRCP REPAIRS

PLAN VIEW

CONTINUOUSLY REINFORCED CONCRETE PAVEMENT REPAIR AND REPLACEMENT
STATE OF WISCONSIN DEPARTMENT OF TRANSPORTATION
APPROVED 11/1/2011 — DATE /S/ Deb Bischoff — PAVEMENT POLICY & DE NEER FHWA

6

6

S.D.D. 13 A 7-2

S.D.D. 13 A 7-2

GENERAL NOTES

SAW CUT, DRILL, AND LIFT OUT EXISTING CONCRETE PAVEMENT WITHIN THE BOUNDARIES OF CONCRETE REPAIR AREAS. THE CONTRACTOR MAY MAKE ADDITIONAL SAW CUTS INSIDE THE REPAIR LIMITS TO REDUCE WEIGHT AND SIZE OF CONCRETE PIECES. ADDITIONAL SAW CUTS ARE NOT PAID FOR BY THE DEPARTMENT.

PROVIDE 6-FOOT MINIMUM DISTANCE FROM BOUNDARIES OF CONCRETE REPAIR AREAS TO ADJACENT TRANSVERSE JOINT OR CRACK.

THE LENGTH OF THE REPAIRS MAY VARY FROM THE DIMENSIONS SHOWN IF THE EXISTING CONCRETE PAVEMENT IS NONDOWELED AND THE PAVEMENT IS TO BE OVERLAID AFTER REPAIRING.

(1) DOWEL BARS MIGHT NOT EXIST.

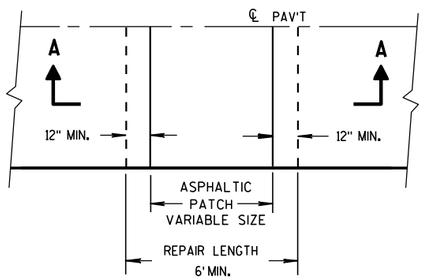

PLAN VIEW

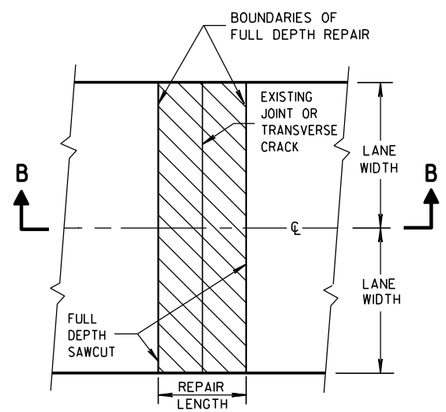

PLAN VIEW
(DOUBLE LANE REPAIR)

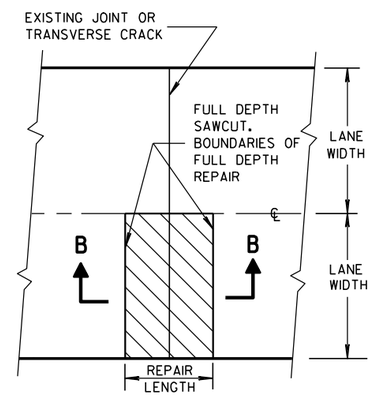

PLAN VIEW
(SINGLE LANE REPAIR)

FULL DEPTH CONCRETE PAVEMENT REMOVAL

(SEE NOTE)

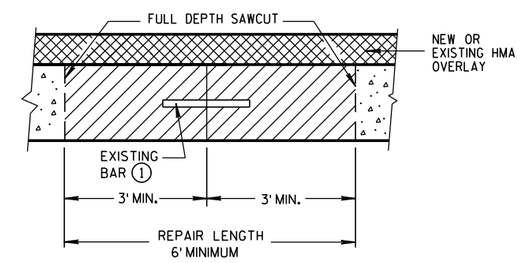

SECTION B-B

CONCRETE REMOVAL

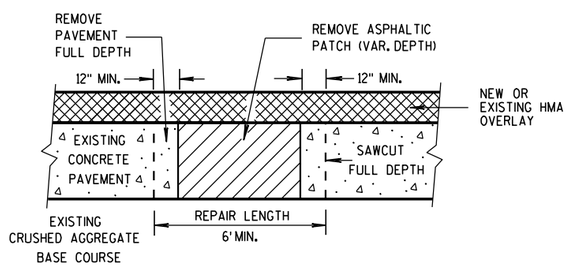

SECTION A-A

HMA PATCH REMOVAL

BASE PATCHING CONCRETE

STATE OF WISCONSIN
DEPARTMENT OF TRANSPORTATION

S.D.D. 13 C 14-4a

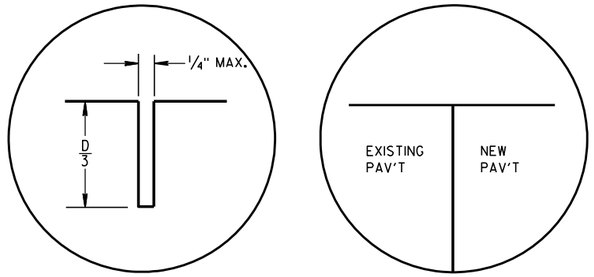

C1 C2

TRANSVERSE JOINTS

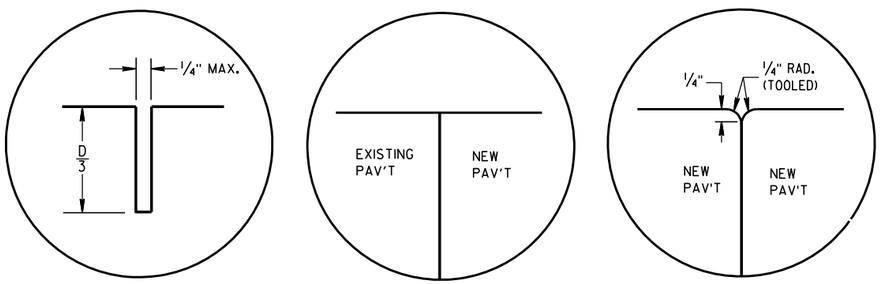

L1 L2 L3

LONGITUDINAL JOINTS

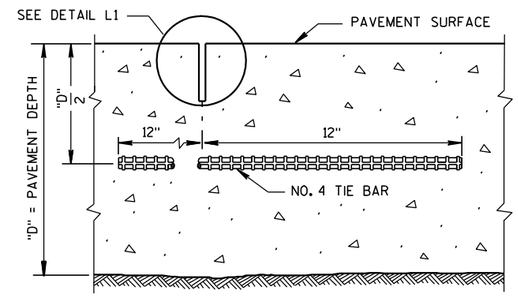

SECTION C-C

SAWED LONGITUDINAL JOINT

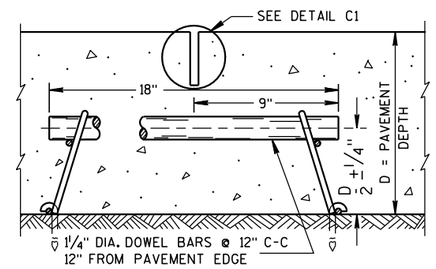

SECTION F-F

CONTRACTION JOINT

GENERAL NOTES

INSTALL DOWEL BARS PARALLEL TO THE PAVEMENT CENTERLINE AND PAVEMENT SURFACE.

CONCRETE BASE PATCHES OF EXISTING NONDOWELED CONCRETE PAVEMENTS DO NOT NEED TO BE DOWELED.

DO NOT SEAL OR FILL JOINTS.

ANCHOR DOWEL BARS AND TIE BARS INTO DRILLED HOLES WITH AN EPOXY.

PROVIDE A MINIMUM DISTANCE OF 24 INCHES FROM AN EXISTING TRANSVERSE JOINT OR THE EDGE OF REPLACEMENT TO THE CENTER OF THE TIE BAR NEAREST THAT JOINT OR EDGE.

(1) APPLY A THIN UNIFORM COATING OF SURFACE TREATMENT TO THE FREE END OF DOWEL BARS TO PREVENT BONDING.

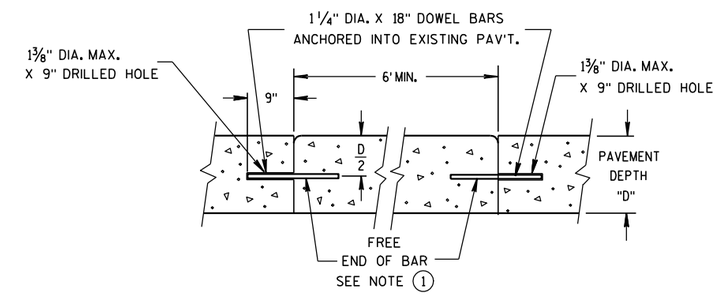

SECTION D-D

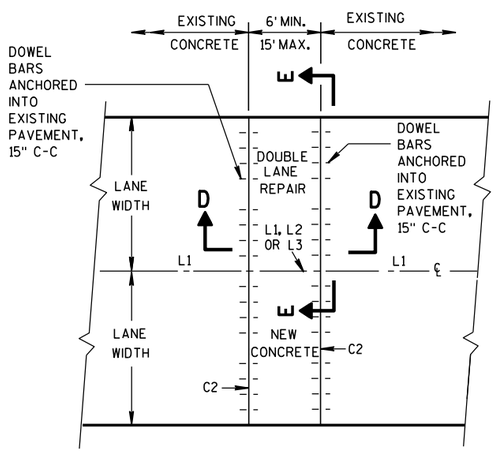

PLAN VIEW

MULTI-LANE CONCRETE BASE PATCH 15' MAXIMUM LENGTH

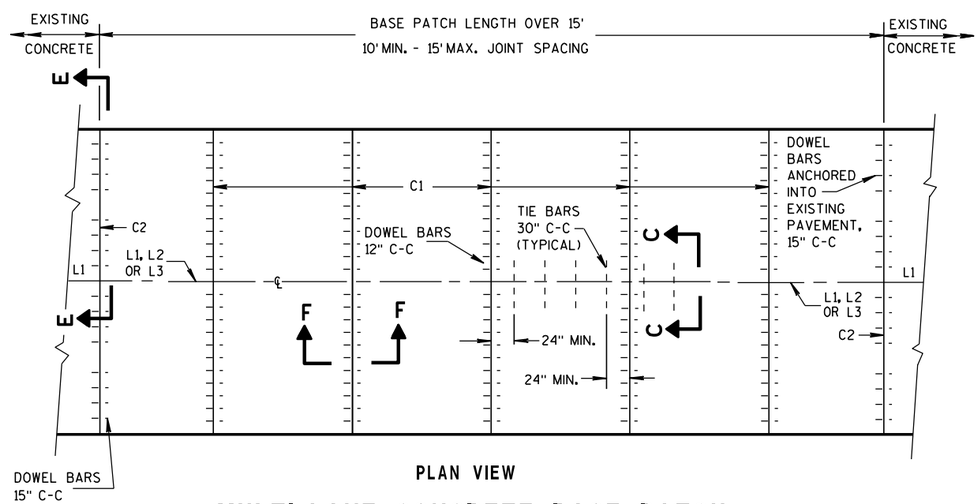

PLAN VIEW

MULTI-LANE CONCRETE BASE PATCH GREATER THAN 15' IN LENGTH

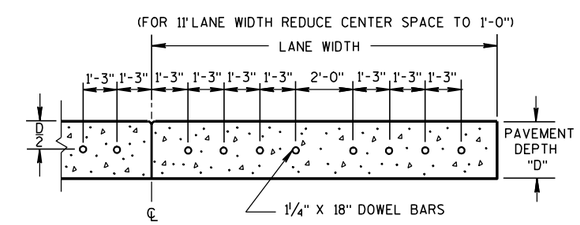

SECTION E-E

SPACING OF DOWEL BARS ANCHORED INTO EXISTING PAVEMENT

BASE PATCHING CONCRETE

STATE OF WISCONSIN
DEPARTMENT OF TRANSPORTATION

6

6

S.D.D. 13 C 14-4b

S.D.D. 13 C 14-4b

GENERAL NOTES

1. USE AN ENGINEER-APPROVED BOND BREAKER FOR SINGLE LANE BASE PATCHES UP TO 15 FEET IN LENGTH.

2. WITH THE APPROVAL OF THE ENGINEER, FOR SINGLE LANE PAVEMENT REPLACEMENTS LESS THAN 30 FEET IN LENGTH, DRILLED TIE BARS MAY BE INSTALLED ON 6:1 SKEW HORIZONTALLY, DIRECTION OF SKEW ALTERNATING WITH EACH SUCCESSIVE BAR. DRIVE SKEWED TIE BARS TO A DEPTH OF 6 INCHES AND TO SUCH A DIAMETER AS TO PROVIDE A TIGHT DRIVEN FIT.

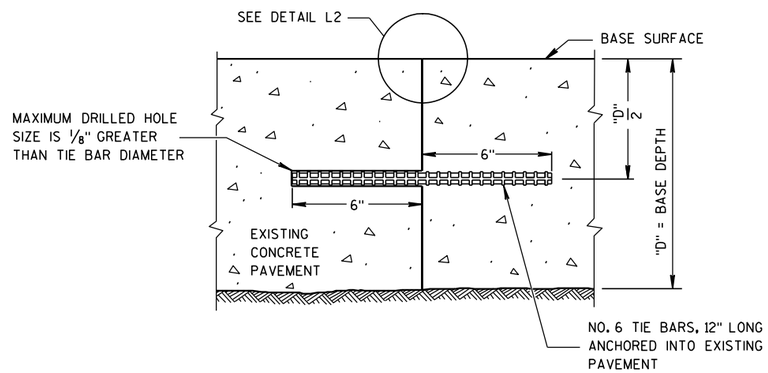

SECTION G-G

TIE BARS ANCHORED INTO EXISTING PAVEMENT

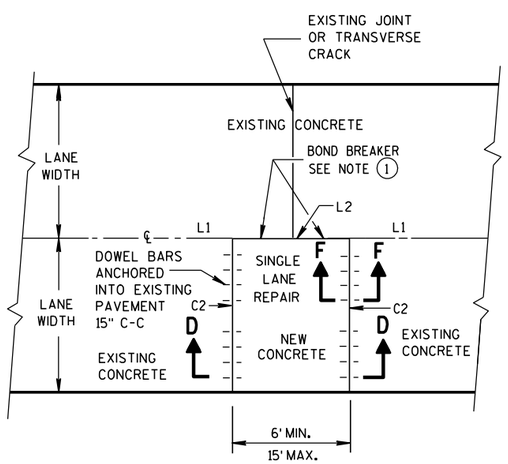

PLAN VIEW

SINGLE LANE CONCRETE BASE PATCH 15' MAXIMUM LENGTH

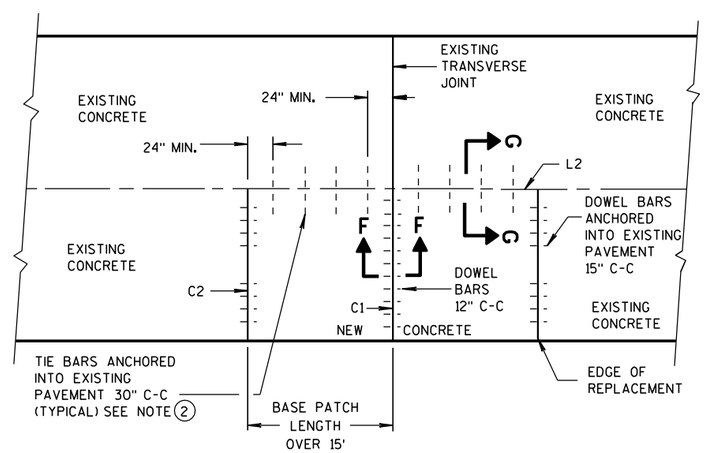

PLAN VIEW

SINGLE LANE CONCRETE BASE PATCH GREATER THAN 15' IN LENGTH

BASE PATCHING CONCRETE

STATE OF WISCONSIN
DEPARTMENT OF TRANSPORTATION

APPROVED
12-11-2009 /S/ Deb Bischoff
DATE PAVEMENT POLICY & DE NEER
FHWA

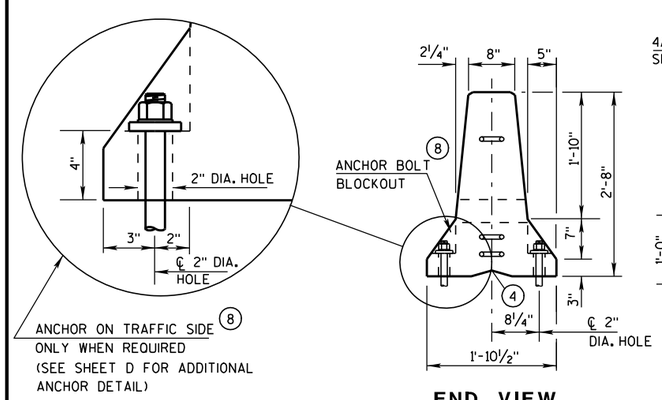

END VIEW

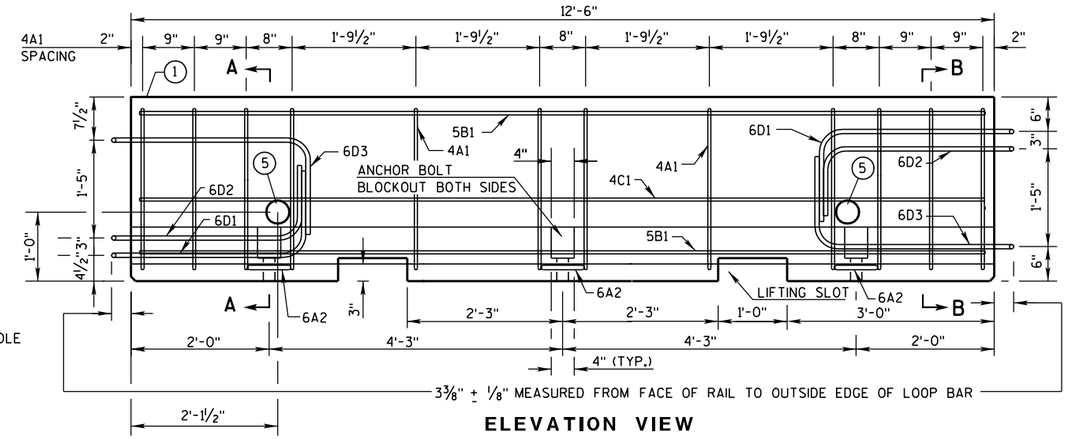

ELEVATION VIEW

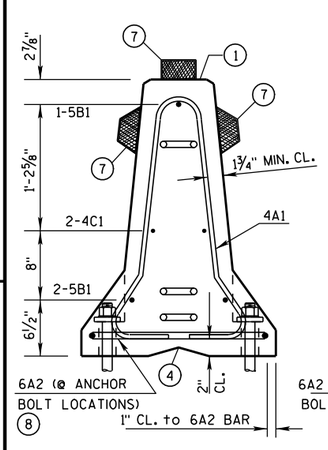

SECTION A-A
(STIRRUP PLACEMENT)

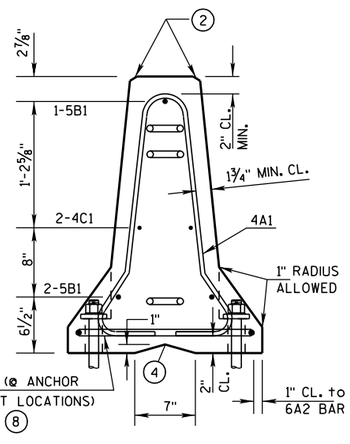

SECTION B-B
(STIRRUP PLACEMENT)

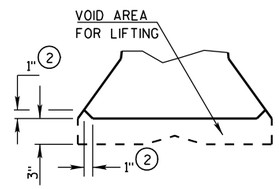

DETAIL "B"
LIFTING SLOT DETAIL

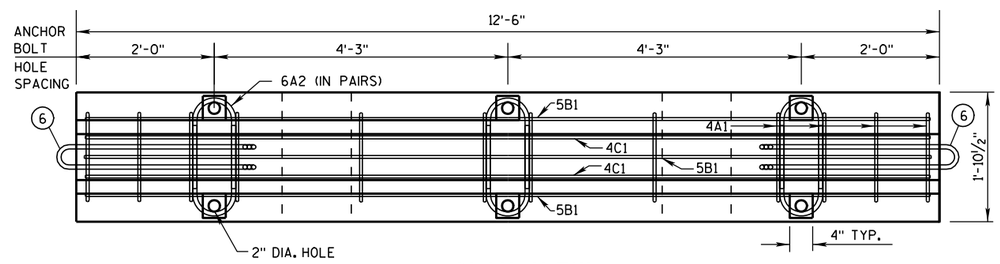

PLAN VIEW

DETAILS OF BARRIER SECTION

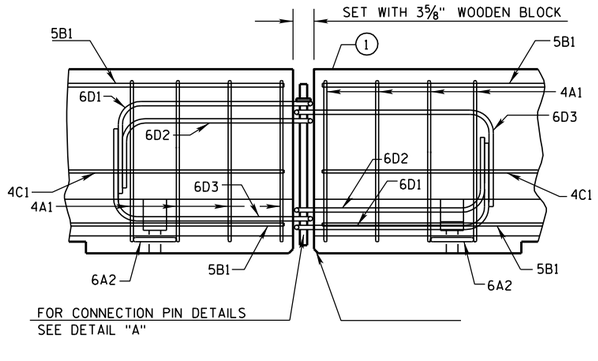

DETAILS OF BARRIER CONNECTION

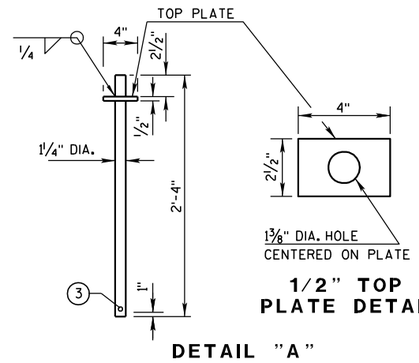

1/2" TOP PLATE DETAIL

DETAIL "A"
CONNECTION PIN
(A36 STEEL (10.9 LB EACH))

GENERAL NOTES

THESE GENERAL NOTES APPLY TO SHEETS 14B7-12(a) THRU 14B7-12(d).

DETAILS AND REQUIREMENTS FOR THE FABRICATION AND INSTALLATION OF CONCRETE BARRIER TEMPORARY PRECAST, 12'-6" (CBTP12.5) ARE SHOWN ON 4 SHEETS, 14B7-12(a) THRU 14B7-12(d)

DO NOT INTERMIX CONCRETE BARRIER TEMPORARY PRCAST, 12'-6" (CBTP12.5) WITH OTHER TEMPORARY CONCRETE BARRIERS.

USE ASTM A-615, GRADE 60, DEFORMED STEEL BARS FOR BARS 4A1, 6A2, 5B1 AND 4C1 IN THE BARRIER SECTION AND FOR 4V1, 4V2, 4V3, 4V4, 4V5, 4V6, 4F1, 4F2 AND 5F3 IN THE BARRIER TAPER SECTION.

LOOP BARS 6D1, 6D2 AND 6D3 SHALL BE ¾" SMOOTH STEEL BARS WITH A MINIMUM YIELD STRENGTH OF 60 KSI, A TENSILE STRENGTH OF NOT LESS THAN 1.25 TIMES THE YIELD STRENGTH BUT A MINIMUM OF 80 KSI, A MINIMUM 14% ELONGATION IN 8 INCHES AND PASSING A 180 DEGREE BEND TEST USING A 3-½" PIN BEND DIAMETER FOR BEND TESTS. THE LOOPS SHALL BE INSTALLED WITHIN ⅛" OF THE PLAN DIMENSION.

CONSTRUCT LIFTING SLOTS AS SPECIFIED ON THE PLANS TO FACILITATE THE DRAINAGE OF WATER AFTER INSTALLATION.

PLACE BARRIER ON A PAVED SURFACE. REMOVE ALL LOOSE DIRT AND SAND FROM THE ROADWAY SURFACE PRIOR TO PLACEMENT OF THE BARRIER.

(1) MARK ONE END OF EACH BARRIER PERMANENTLY BY FORMING INTO THE BARRIER THE FOLLOWING INFORMATION:
- a. TYPE: WI CBTP
- b. MANUFACTURER
- c. DATE MANUFACTURED (MONTH AND YEAR)

(2) 1" CHAMFER TO PREVENT SPALLING.

(3) A ⅜" HOLE IN THE CONNECTION PIN, AT THE LOCATION SHOWN, IS ACCEPTABLE, BUT NOT REQUIRED..

(4) "V" NOTCH IS OPTIONAL.

(5) THE 4" DIAMETER, 11 GAUGE STEEL, ROUND MECHANICAL TUBING SLEEVE FOR LIFTING (OPTIONAL).

(6) NEVER USE LOOP BARS (6D1, 6D2 OR 6D3) TO LIFT, MOVE OR REPOSITION THE BARRIER.

(7) USE DELINEATORS CONFORMING TO SECTION 633 OF THE STANDARD SPECIFICATIONS. CONTRACTOR MAY USE ALTERNATE SHAPES AND HOUSING. INSTALL DELINEATORS ACCORDING TO MANUFACTURES INSTRUCTION. INSTALL YELLOW REFLECTORS WHEN BARRIER IS LOCATED TO THE LEFT OF TRAFFIC AND WHITE REFLECTORS WHEN BARRIER IS LOCATED TO THE RIGHT OF TRAFFIC. SPACE DELINEATORS A MAXIMUM OF 25 FEET APART. PROVIDE TOP MOUNTED DELINEATORS IN ADDITION TO THE SIDE MOUNTED DELINEATORS ON ALL BARRIER INSTALLATIONS LOCATED ON A CURVED ALIGNMENT LONGER THAN 200 FEET AND ON BARRIERS USED TO SEPARATE OPPOSING TRAFFIC.

(8) SEE SHEET D FOR ANCHORING CRITERIA.

CONCRETE BARRIER TEMPORARY PRECAST, 12'-6"

STATE OF WISCONSIN
DEPARTMENT OF TRANSPORTATION

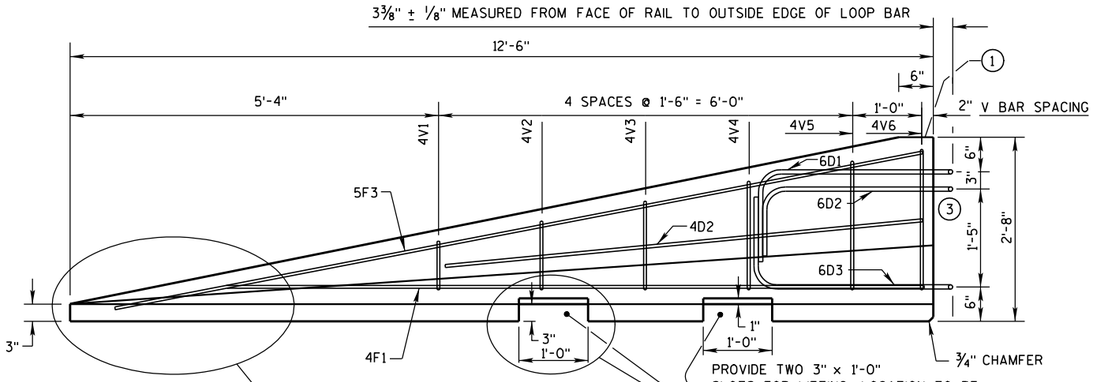

SIDE ELEVATION

(FOR CONNECTION TO LEFT END OF BARRIER)

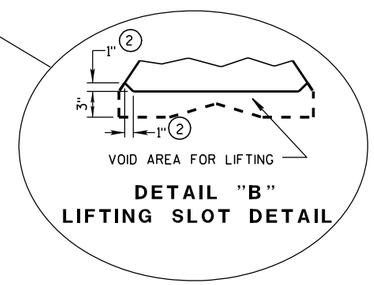

DETAIL "B"
LIFTING SLOT DETAIL

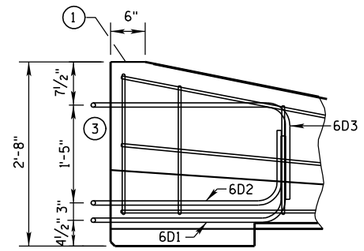

SIDE ELEVATION

LOOP BAR ASSEMBLY INVERTED
FOR OPPOSITE END.
(FOR CONNECTION TO RIGHT END OF BARRIER)

GENERAL NOTES

1. MARK ONE END OF EACH BARRIER PERMANENTLY BY FORMING INTO THE BARRIER THE FOLLOWING INFORMATION:
   a. TYPE WICBTP
   b. MANUFACTURER
   c. DATE MANUFACTURED (MONTH AND YEAR)
2. 1" CHAMFER TO PREVENT SPALLING.
3. NEVER USE LOOP BARS (6D1, 6D2 OR 6D3) TO LIFT, MOVE OR REPOSITION THE BARRIER.

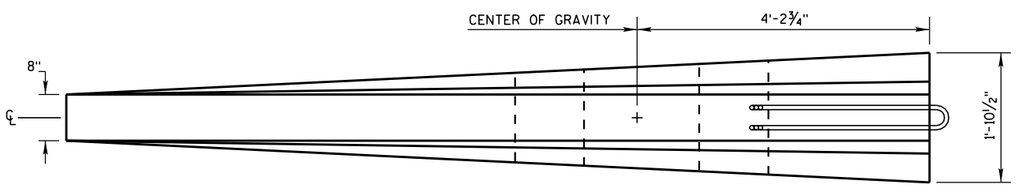

PLAN VIEW

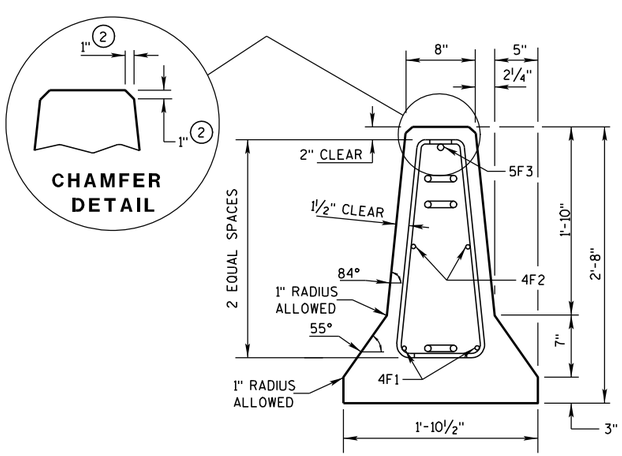

END SECTION

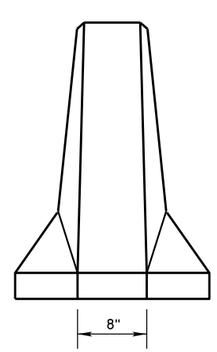

FRONT ELEVATION

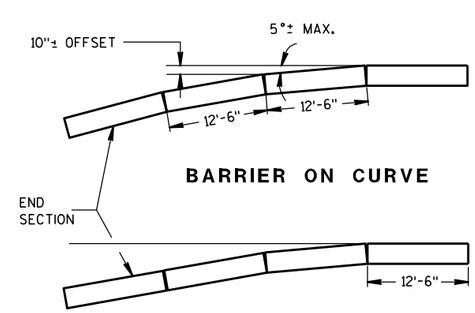

BARRIER ON CURVE

FLARE AT BARRIER END

POSTED SPEED, (MPH)	FLARE RATE
40 OR LESS	6:1
45 OR GREATER	8:1

DETAILS OF BARRIER TAPER SECTION

CONCRETE BARRIER
TEMPORARY PRECAST, 12'-6"

STATE OF WISCONSIN
DEPARTMENT OF TRANSPORTATION

6

S.D.D. 14 B 7-12b

GENERAL NOTES

(1) NEVER USE LOOP BARS (6D1, 6D2 OR 6D3) TO LIFT, MOVE OR REPOSITION THE BARRIER.

BARRIER TAPER SECTION BILL OF MATERIALS

(PER 12'-6" BARRIER TAPER SECTION)

BAR	BAR SIZE	NO. OF BARS	LENGTH FT.
4V1	4	2	1'-11"
4V2	4	2	2'-2"
4V3	4	2	2'-6"
4V4	4	2	2'-9"
4V5	4	2	3'-2"
4V6	4	2	3'-4"
4F1	4	2	12'-0"
4F2	4	2	7'-6"
5F3	5	1	11'-9"
LOOP ASSEMBLY			
6D1	6	1	8'-5"
6D2	6	1	7'-7"
6D3	6	1	8'-6"

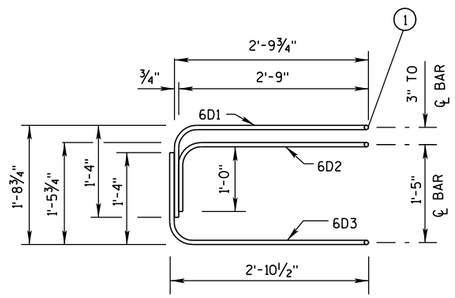

ELEVATION
LOOP BAR ASSEMBLY

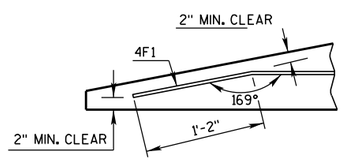

DETAIL "C"
BENT BAR DETAIL

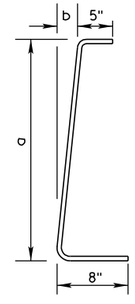

BAR	a	b
V1	10"	1"
V2	1'-1"	1¼"
V3	1'-5"	1⅝"
V4	1'-8"	1⅞"
V5	2'-0½"	2⅜"
V6	2'-3"	2¾"

4V BARS
2 AT EACH SIZE REQUIRED
FOR STIRRUP ASSEMBLY

TAPER BARRIER SECTION

BARRIER SECTION BILL OF MATERIALS

(PER 12'-6" BARRIER SECTION)

BAR	BAR SIZE	NO. OF BARS	LENGTH FT.
4A1	4	12	6'-0"
6A2	6	6	2'-11"
5B1	5	3	12'-2"
4C1	4	2	12'-2"
LOOP ASSEMBLY			
6D1	6	2	8'-5"
6D2	6	2	7'-7"
6D3	6	2	8'-6"

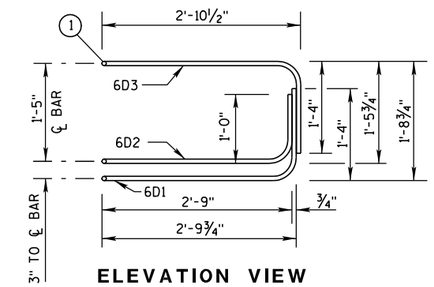

ELEVATION VIEW

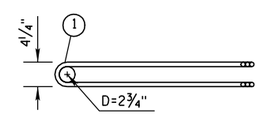

PLAN VIEW
LOOP BAR ASSEMBLY
(MARKED END SHOWN, INVERT FOR OTHER END)

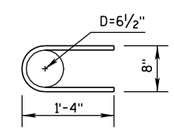

6A2

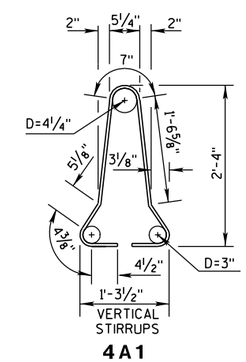

4A1

BARRIER SECTION

CONCRETE BARRIER
TEMPORARY PRECAST, 12'-6"

STATE OF WISCONSIN
DEPARTMENT OF TRANSPORTATION

6
S.D.D. 14 B 7-12c

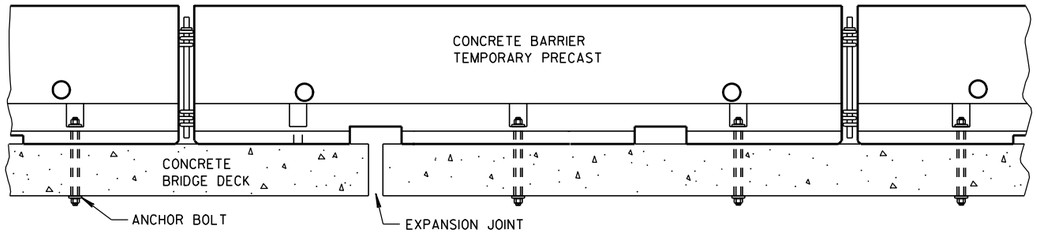

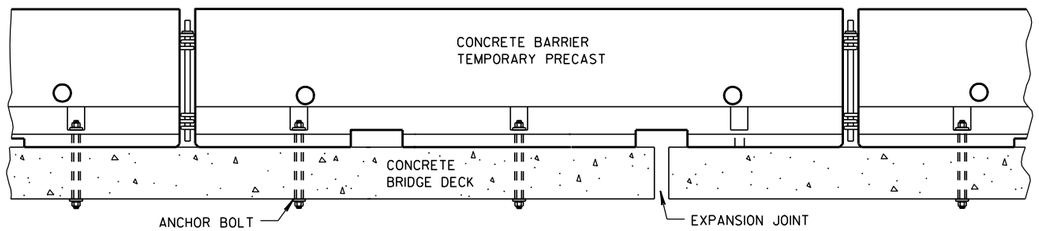

TREATMENT AT BRIDGE DECK EXPANSION JOINTS

(NO SINGLE CONCRETE BARRIER SECTION SHALL BE ANCHORED TO BOTH THE BRIDGE DECK AND THE APPROACH SLAB. ALL ANCHOR BOLT LOCATIONS SHALL BE ANCHORED TO THE DECK IN ACCORDANCE WITH THE DETAIL. NO MORE THAN ONE ANCHOR BOLT SHALL BE ELIMINATED FROM A BARRIER SECTION WHEN SPANNING AN EXPANSION JOINT.)

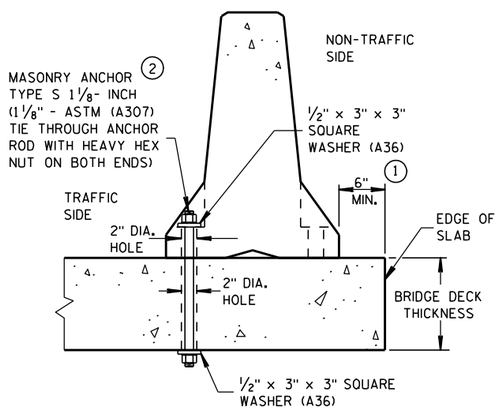

THROUGH BOLTED ANCHOR INSTALLATION ON BRIDGE DECK

(DO NOTUSE ON CONCRETE BRIDGE DECK WITH ASPHALT OVERLAY)

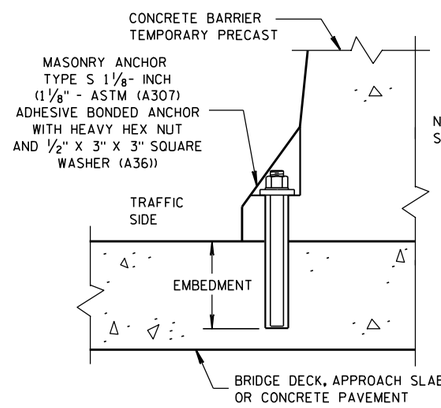

REMOVABLE ADHESIVE BONDED ANCHOR INSTALLATION ON CONCRETE BRIDGE DECK, CONCRETE APPROACH SLAB, OR CONCRETE PAVEMENT 2

(DO NOT USE ON CONCRETE WITH AN ASPHALTIC OVERLAY)

GENERAL NOTES

1. CONCRETE BARRIER TEMPORARY PRECAST, 12'-6" SHALL BE ANCHORED IF:
   THE DISTANCE TO A 2 FOOT OR GREATER DROPOFF THAT IS STEEPER THAN 3H : 1V, FOR EXAMPLE THE EDGE OF A BRIDGE DECK OR A DROPOFF AT THE EDGE OF PAVEMENT, IS LESS THAN 4 FEET FROM THE SIDE OF THE BARRIER CLOSEST TO THE DROPOFF AND THE POSTED SPEED IS 45 MPH OR GREATER, OR

   THE DISTANCE TO A 2 FOOT OR GREATER DROPOFF THAT IS STEEPER THAN 3H : 1V, FOR EXAMPLE THE EDGE OF A BRIDGE DECK OR A DROPOFF AT THE EDGE OF PAVEMENT, IS LESS THAN 2 FEET FROM THE SIDE OF THE BARRIER CLOSEST TO THE DROPOFF AND THE POSTED SPEED IS 40 MPH OR LESS.

2. ANCHORING IS INCIDENTAL TO CONCRETE BARRIER TEMPORARY PRECAST.

   WITH THE APPROVAL OF THE ENGINEER, REMOVABLE ADHESIVE BONDED (EPOXY) ANCHOR BOLT INSTALLATION MAY BE USED IN LIEU OF THROUGH BOLTED ANCHOR INSTALLATION. THE ADHESIVE BONDED ANCHOR BOLT MUST BE REMOVABLE. USE ASTM (A307) MASONRY ANCHORS TYPE S 1 1/8-INCH, EMBEDDED TO A DEPTH SUFFICIENT TO DEVELOP THE ULTIMATE CAPACITY OF THE ANCHOR BOLT AND PROVIDE DOCUMENTATION TO CONFIRM THIS.

   UPON REMOVAL OR RELOCATION OF THE BARRIER UNITS, REMOVE ALLANCHOR BOLTS AND COMPLETELY FILL IN THE REMAINING HOLES IN CONCRETE BRIDGE DECKS, CONCRETE APPROACH SLABS AND CONCRETE PAVEMENTS THAT ARE TO REMAIN, WITH A NON-SHRINK COMMERICAL GROUT OR EPOXY MATERIAL IDENTIFIED ON THE CURRENT WISDOT APPROVED PRODUCTS LIST.

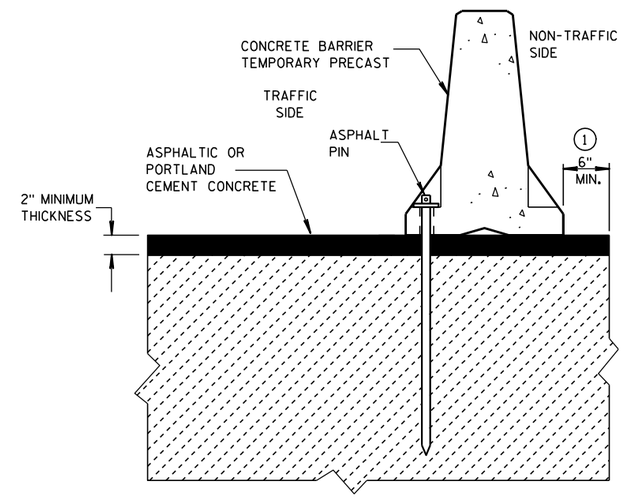

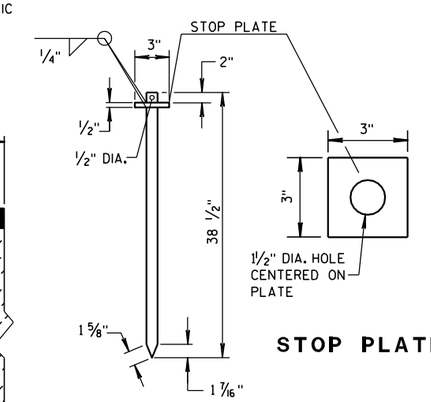

STOP PLATE

ASPHALT PIN
(ASTM A36 STEEL)

STAKE DOWN INSTALLATION FOR ASPHALTIC OR PORTLAND CEMENT CONCRETE SURFACE

(STAKING IS INCIDENTAL TO CONCRETE BARRIER TEMPORARY PRECAST)

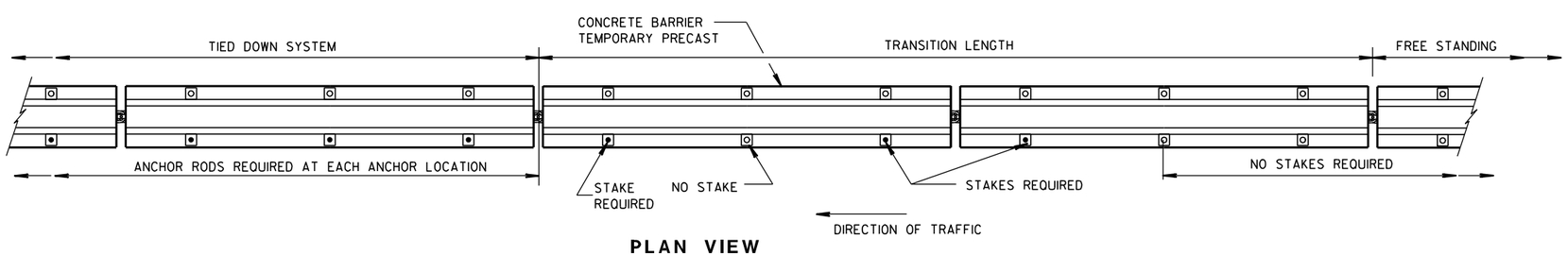

PLAN VIEW

FREE STANDING TRANSITION TO TIED-DOWN SYSTEM

(PLACE TRANSITION IN A TANGENT SECTION OF BARRIER PARALLEL TO THE ROADWAY. IF TRANSITION OCCURS ON STRUCTURAL SLAB, ANCHOR AS SHOWN.)

CONCRETE BARRIER
TEMPORARY PRECAST, 12'-6"

STATE OF WISCONSIN
DEPARTMENT OF TRANSPORTATION

APPROVED

6-3-2010	/S/ Jerry H. Zaas	
DATE	ROADWAY STANDARD D ENGINEER	NT

FHWA

GENERAL NOTES

1. WOOD OR STEEL POSTS (w6X9 OR w6X8.5) MAY BE USED. DO NOT INTERMIX WOOD AND STEEL POSTS. INSTALL STEEL POSTS WITH HOLES ON APPROACHING TRAFFIC SIDE.

2. USE WOOD OR APPROVED PLASTIC BLOCKOUTS. WOOD BLOCKOUTS MAY BE CONSTRUCTED OUT OF TWO OR MORE WOOD BLOCKOUTS. SEE ALTERNATE WOOD BLOCKOUT DETAIL. DIMENSIONS OF APPROVED PLASTIC BLOCKOUTS MAY VARY.

3. IF ROCK IS ENCOUNTERED DURING EXCAVATION, PROVIDE A HOLE 12 INCHES IN DIAMETER EXTENDING 20 INCHES DEEP INTO THE ROCK. PLACE APPROXIMATELY 2½ INCHES OF GRANULAR MATERIAL IN THE BOTTOM OF THE HOLE. CUT THE POSTS THE TO LENGTH AMD INSTALL. BACKFILL WITH EXCAVATED MATERIAL AND COMPACT. BACKFILL IS TO BE FREE OF LARGE ROCKS.

4. WHEN THE DISTANCE FROM BACK OF POST TO SHOULDER HINGE POINT IS LESS THAN 2 FEET INSTALL LONGER POST AT HALF POST SPACING (K).

5. FOR NEW MGS INSTALLATION TOP OF W-BEAM RAIL TOLERANCE IS ± 1". FOR EXISTING MGS INSTALLATION TOP OF W-BEAM IS BETWEEN 27¾" TO 32".

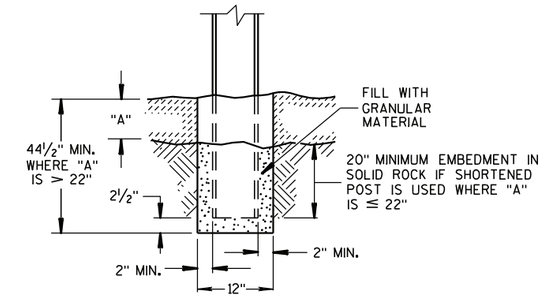

END VIEW
SETTING STEEL OR WOOD POST IN ROCK (3)

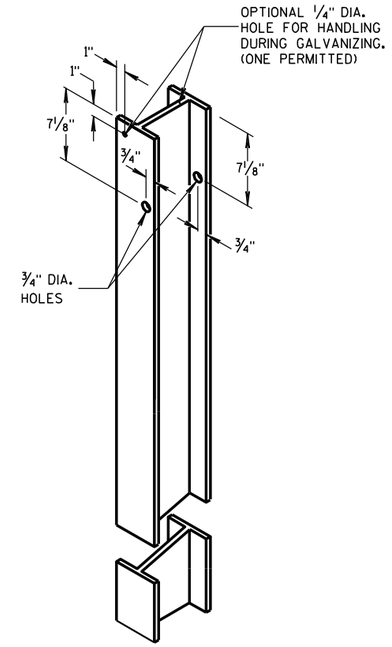

STEEL POST &
HOLE PUNCHING DETAIL
(w6X9) (1)

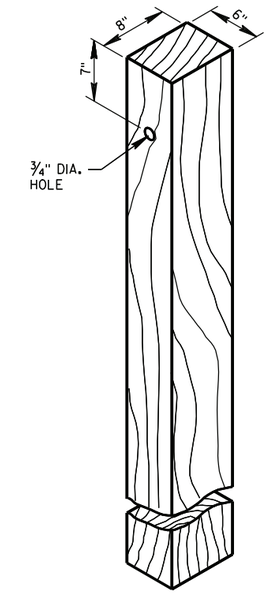

WOOD POST
(6" X 8") NOMINAL (1)

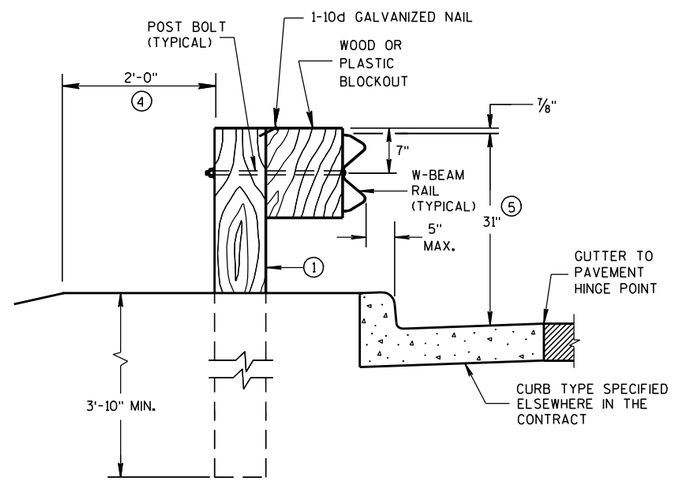

END VIEW
LOCATED ALONG A CURBED ROADWAY

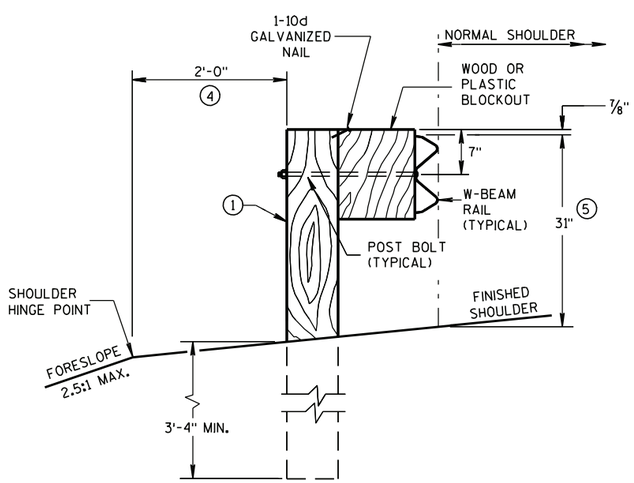

END VIEW
LOCATED ALONG A ROADWAY SHOULDER
STANDARD INSTALLATION

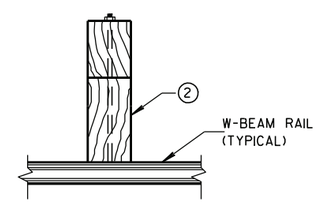

PLAN VIEW
WOOD POST,
BLOCKOUT & BEAM

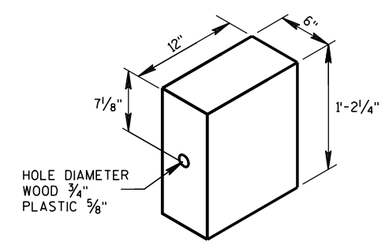

WOOD OR
PLASTIC BLOCKOUT (2)

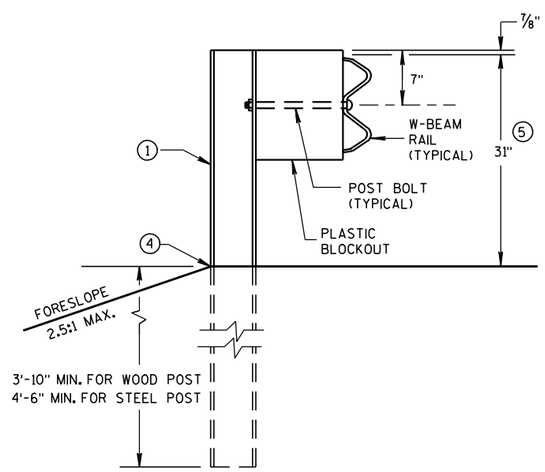

END VIEW
MGS LONGER POST AT HALFPOST SPACING W BEAM (K)

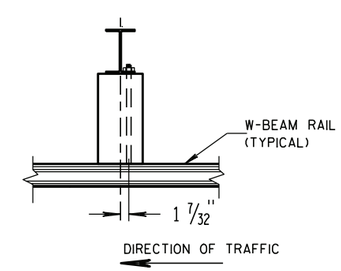

PLAN VIEW
STEEL POST,
PLASTIC BLOCKOUT & BEAM

MIDWEST GUARDRAIL SYSTEM
(MGS) GUARDRAIL

STATE OF WISCONSIN
DEPARTMENT OF TRANSPORTATION

6

S.D.D. 14 B 42-2a

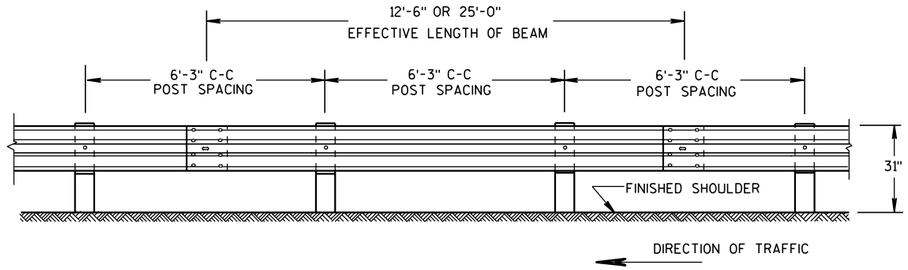

FRONT VIEW

POST SPACING STANDARD INSTALLATION

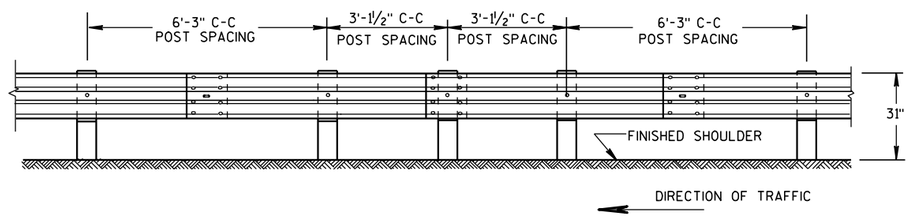

FRONT VIEW

HALF POST SPACING (HS) AND HALF POST SPACING WITH LONGER POSTS (K)

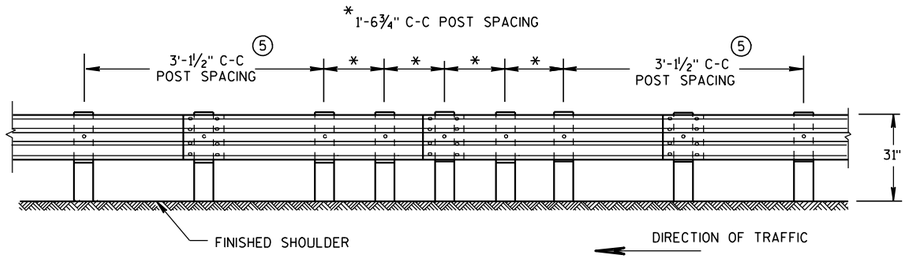

FRONT VIEW

QUARTER POST SPACING (QS)

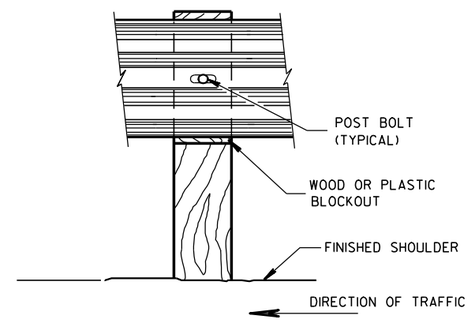

FRONT VIEW AT WOOD POST

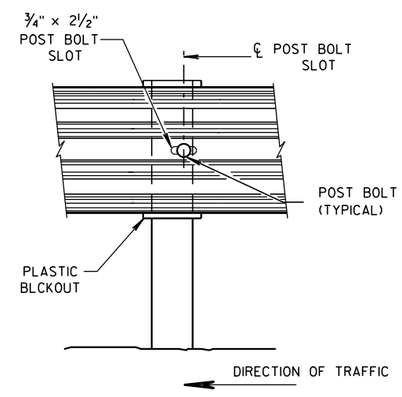

FRONT VIEW AT STEEL POST

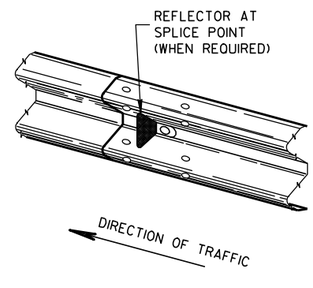

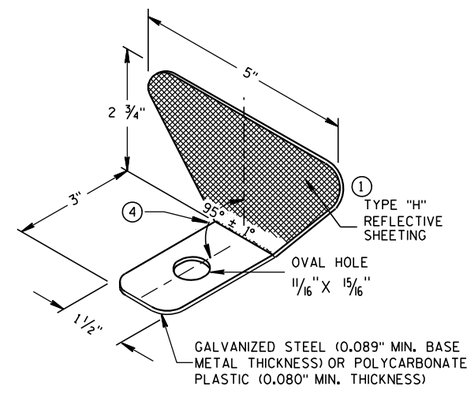

ONE SIDED REFLECTOR DETAIL AND TYPICAL INSTALLATION 1

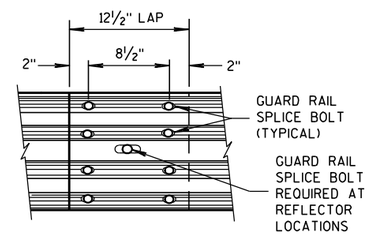

FRONT VIEW

MID-SPAN BEAM SPLICE

GENERAL NOTES

1. PROVIDE TYPE "H" SILVER REFLECTIVE SHEETING ON ALL REFLECTORS EXCEPT THOSE LOCATED ALONG THE LEFT EDGE OF ONE-WAY ROADWAYS, WHICH SHALL BE PROVIDED WITH TYPE "H" YELLOW REFLECTIVE SHEETING.
2. DO NOT INSTALL REFLECTORS ON THE FIRST 50 FEET OF THE APPROACH END OF THE ENERGY ABSORBING TERMINAL. RAIL SPLICE LOCATIONS ARE THE ONLY ACCEPTABLE LOCATIONS FOR REFLECTORS.
3. REVERSE EVERY OTHER REFLECTOR FOR 2-WAY VISIBILITY. THE CONTRACTOR MAY FURNISH TWO-SIDED REFLECTORS IN LIEU OF ONE-SIDED REFLECTORS.
4. PROVIDE AN ANGLE OF BEND OF 90° ± 1° FOR TWO-SIDED REFLECTORS.
5. 25 FEET OF HALF POST SPACING IS REQUIRED ON APPROACH AND DEPARTURE ENDS OF QUARTER POST SPACING.

POST BOLTS ARE A ⅝" DIAMETER ASTM A307 GUARDRAIL BOLT. A POST BOLT REQUIRES ⅝" DIAMETER A563A DOUBLE RECESSED (DR) HEAVY HEX NUT AND ⅝" DIAMETER F844 FLAT WASHER. POST BOLTS MAY BE LONGER IF MULTIPLE BLOCKOUTS ARE BEING USED.

GUARD RAIL SPLICE BOLTS ARE A ⅝" DIAMETER ASTM A307 GUARDRAIL HEAD BOLT. A GUARDRAIL SPLICE BOLT REQUIRES ⅝" DIAMETER A563A DOUBLE RECESSED (DR) HEAVY HEX NUT.

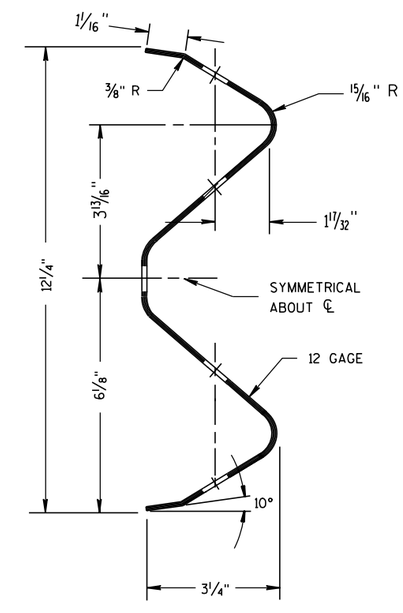

SECTION THRU W-BEAM RAIL

REFLECTOR SPACING 2

	BEAM GUARD LENGTH	REFLECTOR SPACING	NO. SURFACES REFLECTORIZED	MIN. NO. REFLECTORS
ONE WAY TRAFFIC	< 200' > 200'	50' C-C 100' C-C	1 1	3
TWO WAY TRAFFIC	< 200' > 200'	25' C-C 50' C-C	1 3 1	6
TWO WAY TRAFFIC	< 200' > 200'	50' C-C 100' C-C	2 4 2	3

MIDWEST GUARDRAIL SYSTEM (MGS) GUARDRAIL

STATE OF WISCONSIN
DEPARTMENT OF TRANSPORTATION

6

6

S.D.D. 14 B 42-2b

S.D.D. 14 B 42-2b

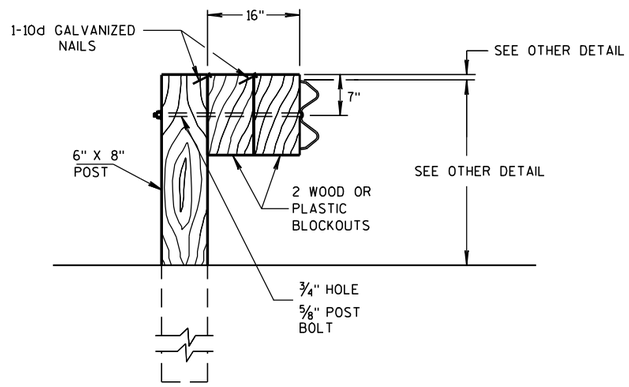

DETAIL FOR 16" BLOCKOUT DEPTH

IT IS ACCEPTABLE TO USE BLOCKOUTS UP TO 16" DEEP TO INCREASE THE POST OFFSET TO AVOID UNDERGROUND OBSTACLES. THERE IS NO LIMIT TO THE NUMBER OF POSTS THAT CAN HAVE ADDITIONAL BLOCKOUTS UP TO 16" DEEP.

NOTE: 1. ALL FILLETS SHALL HAVE A MINIMUM RADIUS OF 1/16".
2. IF THE BOLT EXTENDS MORE THAN 1/4" FROM THE NUT THE BOLT SHOULD BE TRIMMED BACK.

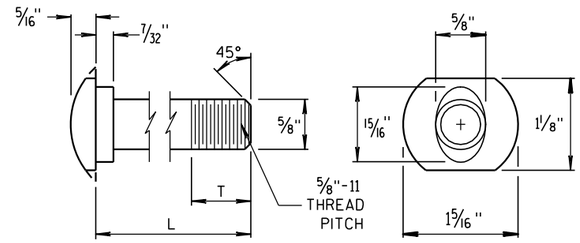

POST BOLT TABLE

L	T (MIN.)
1 1/4"	1 1/8"
2"	1 3/4"
10"	4"
14"	4 1/16"
18"	4"
21"	4 1/16"
25"	4"

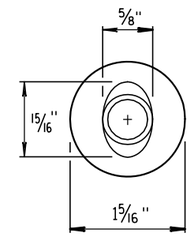

ALTERNATE BOLT HEAD

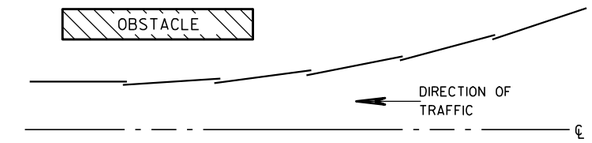

PLAN VIEW

BEAM LAPPING DETAIL

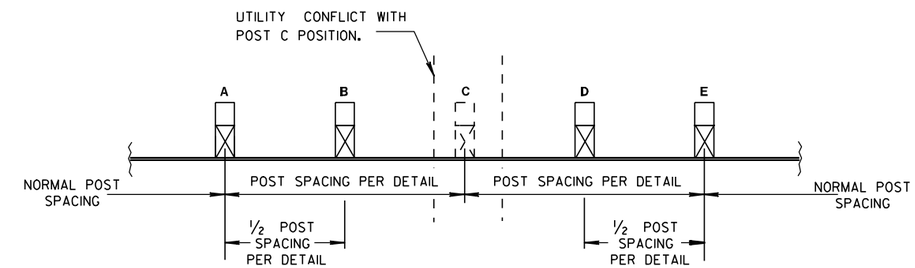

POST DRIVING FOR CONTINUOUS UNDERGROUND OBSTRUCTION

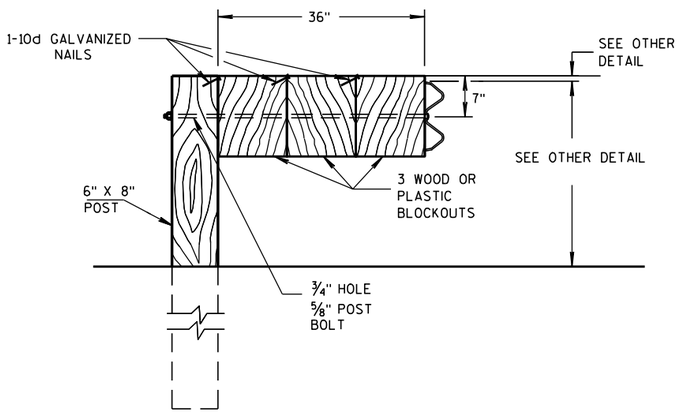

DETAIL FOR 36" BLOCKOUT DEPTH

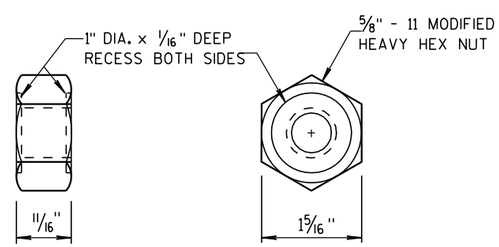

POST BOLT AND RECESS NUT

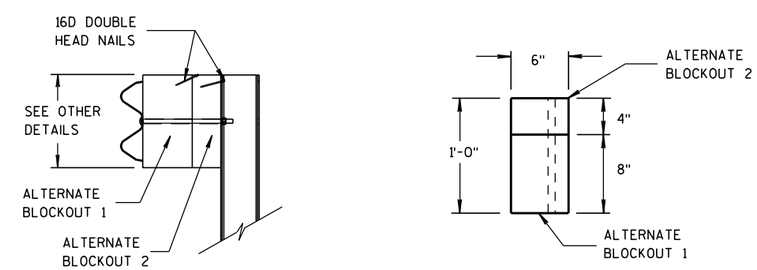

SIDE VIEW TOP VIEW

ALTERNATE WOOD BLOCKOUT DETAIL

NOTES: UNDER SPECIAL CIRCUMSTANCES, SUCH AS AVOIDING OBSTACLES THAT ARE NOT RELOCATED, IT IS ACCEPTABLE TO INSTALL ADDITIONAL BLOCKOUTS TO OBTAIN UP TO 36" DEPTH FOR ONE OR TWO POSTS IN A SECTION OF GUARDRAIL.

DO NOT USE 16" OR 36" BLOCKOUTS IF IT CAUSES THE POST TO BE DRIVEN BEYOND SHOULDER HINGE POINT OR CAUSES A FIXED OBJECT TO BE WITHIN THE DEFLECTION DISTANCE OF THE BARRIER.

MIDWEST GUARDRAIL SYSTEM (MGS) GUARDRAIL

STATE OF WISCONSIN
DEPARTMENT OF TRANSPORTATION

APPROVED
11/15/2011 DATE
/S/ Jerry H. Zogg ROADWAY STANDARDS ENGINEER
FHWA ENT

GENERAL NOTES

(A) THE SLOPE IN THE AREA BOUNDED BY THE EXTENDED VEHICLE RUNOUT PATH (EVRP), THE HINGE POINT LINE (HPL), AND THE CLEAR ZONE LIMITS (CZL) SHALL BE 4:1 OR FLATTER.

(B) AFTER FINAL ASSEMBLY, RECHECK CABLE TO BE SURE IT IS TAUT AND HAS NOT RELAXED.

(C) DIFFERENT MANUFACTURES REQUIRE DIFFERENT PERFORATED W-BEAM RAIL END PANELS. SEE MANUFACTURES INFORMATION.

(D) THE TOP OF THE STEEL TUBE ON POST 1 AND POST 2 SHALL NOT BE MORE THAN 3" ABOVE THE FINISH GROUND ELEVATION.

(F) SHEETING IS ATTACHED TO 0.040 ALUMINUM SHEET AND ATTACHED TO E.A.T. HEAD USING 4 STAINLESS STEEL SELF-TAPPING SCREWS. ONE SCREW PER CORNER OF E.A.T.

(G) ½" DIAMETER X 3" LONG LAG BOLT AND WASHER.

(H) HARDWARE VARIES BETWEEN DIFFERENT MANUFACTURES. SEE MANUFACTURE'S DRAWING FOR INFORMATION.

(I) DIMENSIONS MAY VARY. SEE MANUFACTURE'S INFORMATION.

SEE SDD 14B42 FOR MORE INFORMATION.

* DO NOT ATTACH BLOCKOUTS TO POSTS 1 AND 2.

DO NOT INSTALL REFLECTORS ON THE FIRST 50 FEET OF THE APPROACH END OF THE ENERGY ABSORBING TERMINAL.

W-BEAM RAIL SPLICES ARE LOCATED AT POST NUMBER 3, AND BETWEEN POST 5 AND 6, BETWEEN POSTS 7 AND 8, AND MIDDLE OF THE SPAN AFTER POST 9.

PATTERN AND COLORS ON REFLECTIVE SHEETING TYPE H ARE TO CONFORM TO OM3-L OR OM3-R OF THE MANUAL ON UNIFORM TRAFFIC CONTROL DEVICES.

THE CENTER OF THE UPPER 3½" DIAMETER HOLE ON POST NUMBER 3 THROUGH POST 9 IS TO BE FLUSH WITH THE GROUND LINE (± ¾")

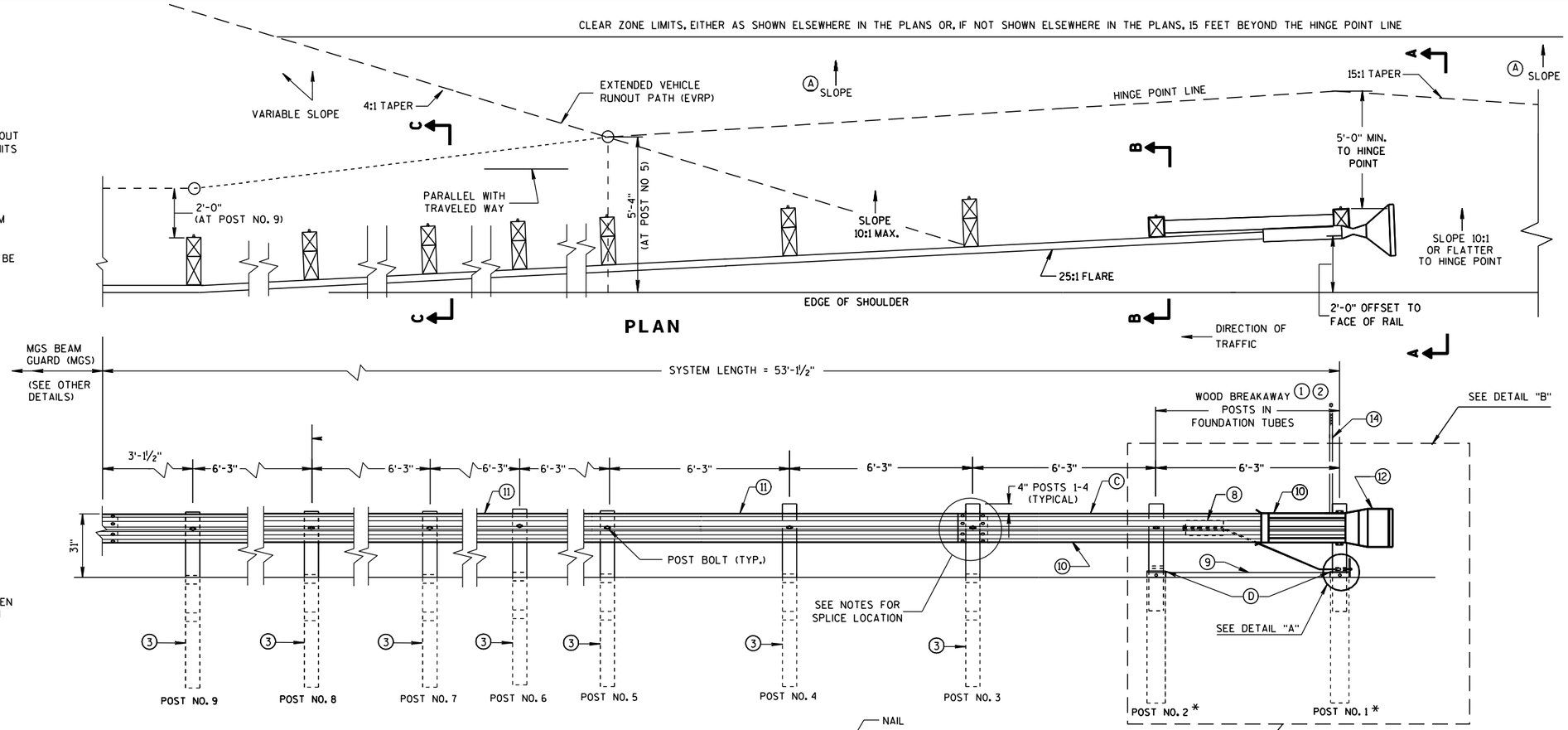

MIDWEST GUARDRAIL SYSTEM ENERGY ABSORBING TERMINAL (MGS)

STATE OF WISCONSIN
DEPARTMENT OF TRANSPORTATION

6

S.D.D. 14 B 44-1a

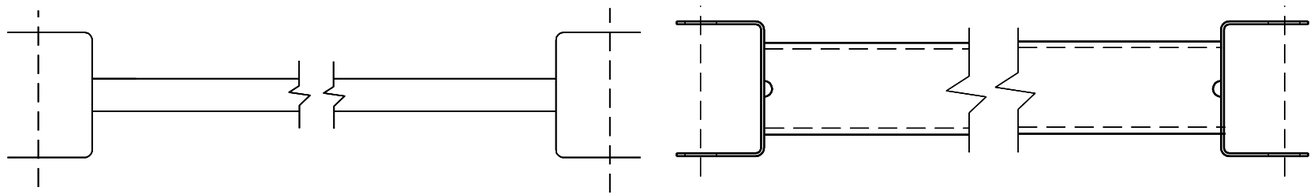

(9) (H)

GENERIC GROUND STRUT

BILL OF MATERIALS

PART NO.	DESCRIPTION MATERIALS PROVIDED BY MGS EAT MANUFACTURER. SEE MANUFACTURER'S DETAILS FOR MORE INFORMATION.
(1)	WOOD BREAKAWAY POST
(2)	6" X 8" X 0.188", 6'-0" LONG FOUNDATION TUBE AT POSTS 1 AND 2
(3)	WOOD CRT
(4)	WOOD BLOCKOUT
(5)	PIPE SLEEVE
(6)	BEARING PLATE
(7)	BCT CABLE ASSEMBLY
(8)	ANCHOR CABLE BOX
(9)	GROUND STRUT
(10)	PERFORATED W-BEAM RAIL END PANEL, 12'-6" LONG.
(11)	STANDARD W-BEAM RAIL. MULTIPLE SECTIONS REQUIRED. SECTIONS VARY IN LENGTH.
(12)	END SECTION EAT
(13)	0.040" ALUMINUM SHEET WITH REFLECTIVE SHEETING TYPE H (ONLY THE SHEETING IS SUPPLIED BY THE MANUFACTURER)
(14)	EAT MARKER POST - YELLOW (SEE APPROVED PRODUCTS LIST)

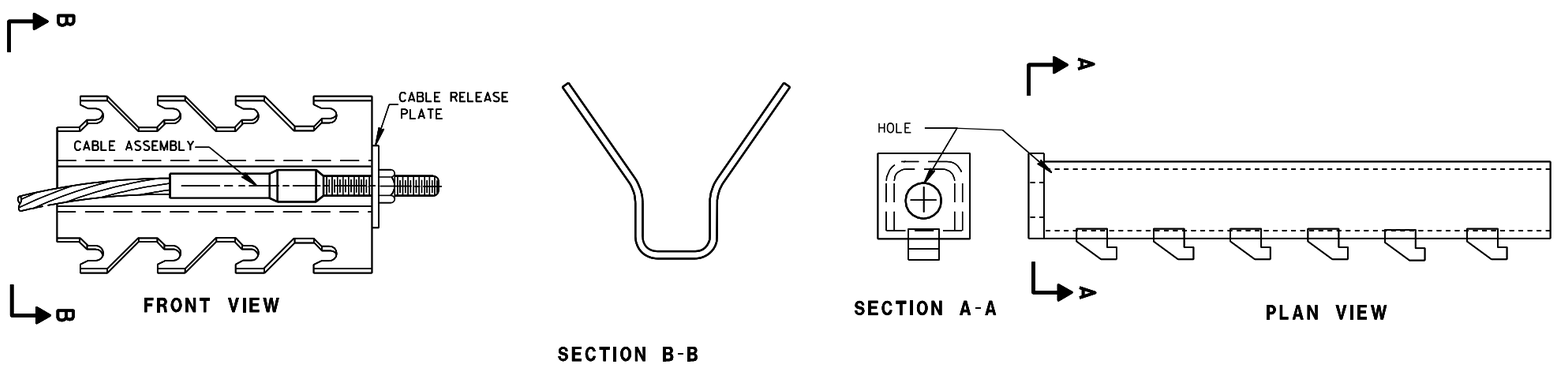

(8) (H)

GENERIC ANCHOR CABLE BOX

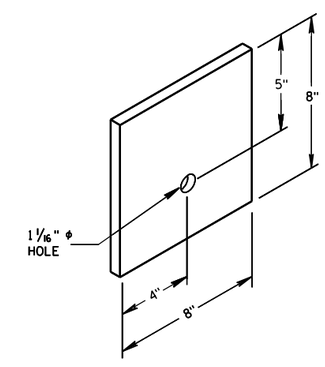

(6)

BEARING PLATE

MIDWEST GUARDRAIL SYSTEM
ENERGY ABSORBING TERMINAL
(MGS)

STATE OF WISCONSIN
DEPARTMENT OF TRANSPORTATION

6

S.D.D. 14 B 44-1b

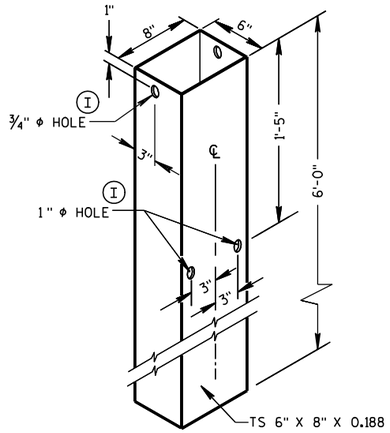

FOUNDATION TUBE (2)

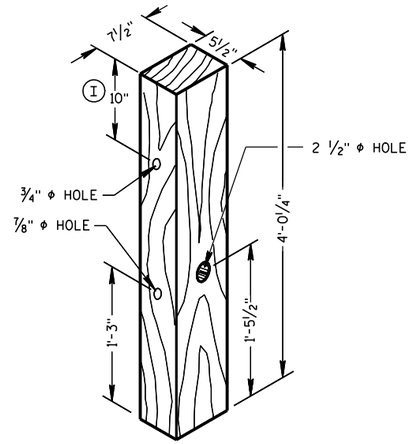

POSTS NUMBER 1 AND 2

WOOD BREAKAWAY POST (1)

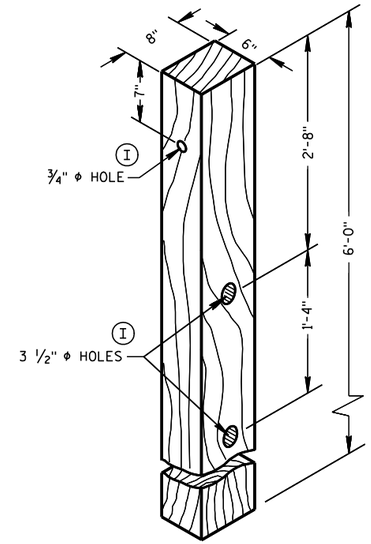

POSTS NUMBER 3-9

WOOD CRT POST (3)

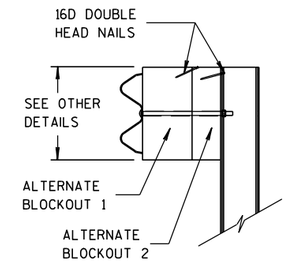

SIDE VIEW

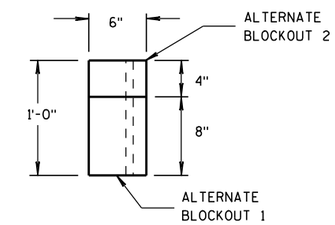

TOP VIEW

ALTERNATE WOOD BLOCKOUT DETAIL

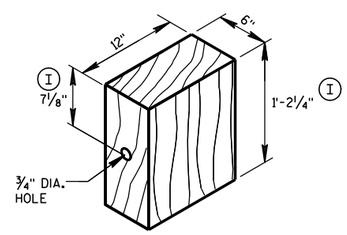

WOOD BLOCKOUT (4)

REQ'D. AT ALL POSTS EXCEPT POST NO'S 1 & 2

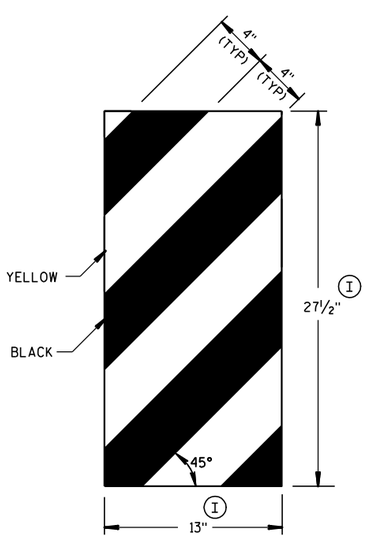

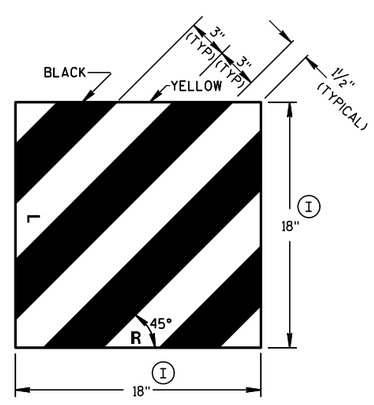

GENERIC REFLECTIVE SHEETING (13) (H)

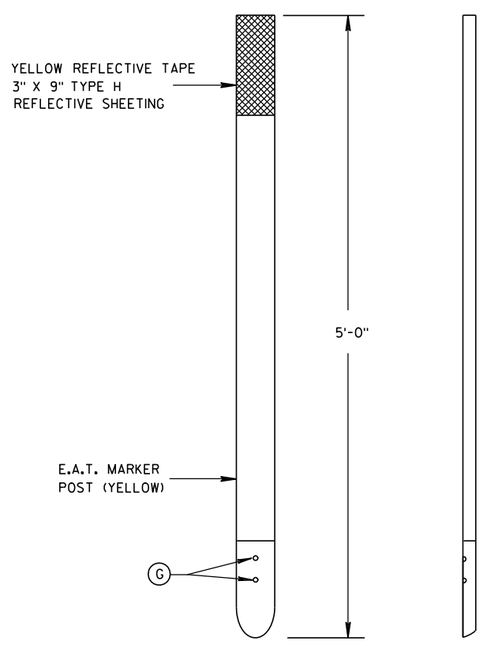

FRONT VIEW

SIDE VIEW

E.A.T. MARKER POST (14)

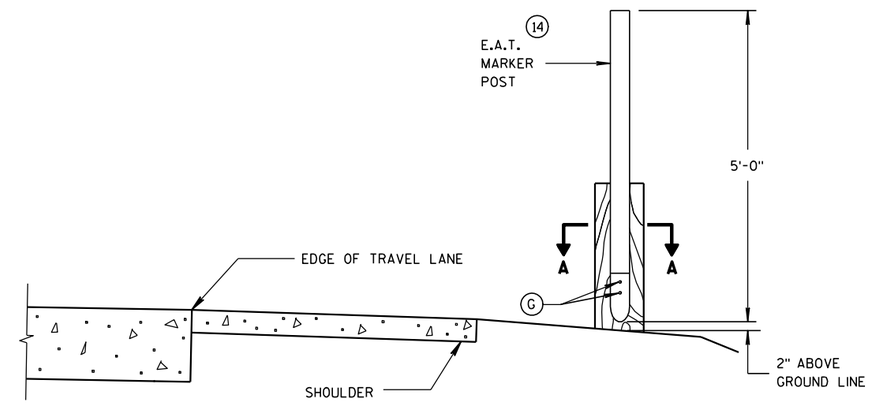

TYPICAL INSTALLATION OF E.A.T. MARKER POST BACKSIDE OF POST NO. 1

(E.A.T. AND RAIL REMOVED FOR CLARITY)

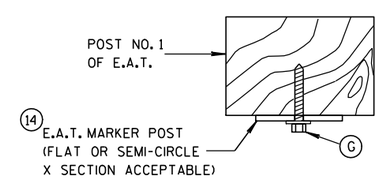

SECTION A-A

MIDWEST GUARDRAIL SYSTEM ENERGY ABSORBING TERMINAL (MGS)

STATE OF WISCONSIN
DEPARTMENT OF TRANSPORTATION

APPROVED
5/23/2011 — DATE
/S/ Jerry H. [illegible] — ROADWAY STANDARDS DEVELOPMENT ENGINEER
FHWA

6

6

S.D.D. 14 B 44-1c

S.D.D. 14 B 44-1c

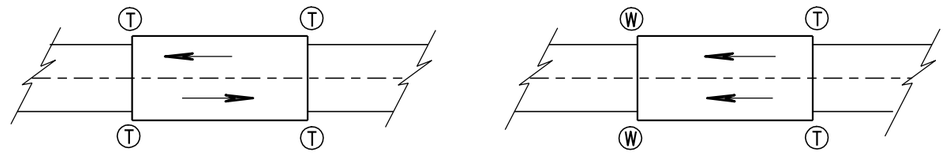

TWO WAY TRAFFIC

ONE WAY TRAFFIC

(T) THRIE BEAM CONNECTION

(W) W-BEAM CONNECTION WHEN REQUIRED

TYPICAL LOCATIONS OF THRIE BEAM AND W-BEAM CONNECTIONS TO BRIDGE

GENERAL NOTES

BOLT THE THRIE BEAM TO ALL POSTS AND BLOCKOUTS. DRILL OR PUNCH BOLT HOLES IN THE BEAM IF THE POST SPACING IS LESS THAN 6'-3.

IF ROCK IS ENCOUNTERED DURING EXCAVATION, SEE STANDARD DETAIL DRAWING 14 B 42.

TRANSITION USES STEEL POSTS ONLY.

SEE STANDARD DETAIL DRAWING 14 B 42 FOR MORE INFORMATION.

(A) BRIDGE RAILING TYPE "W" DOES NOT REQUIRE A TERMINAL CONNECTOR.

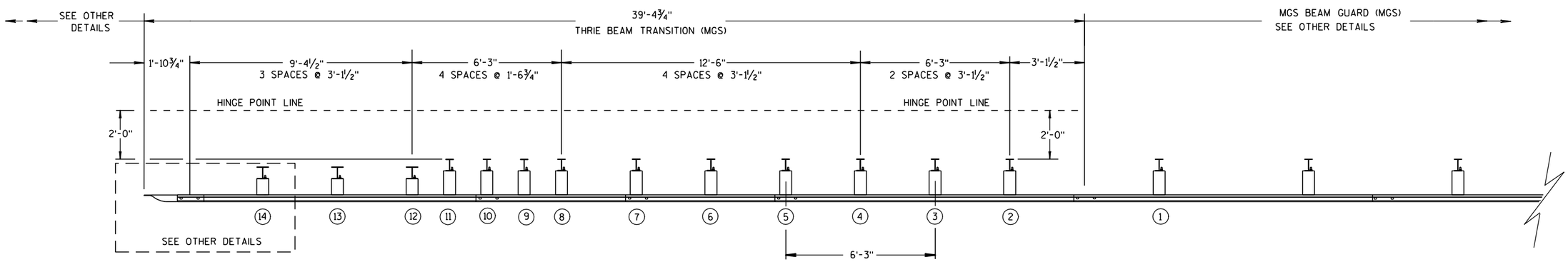

PLAN VIEW

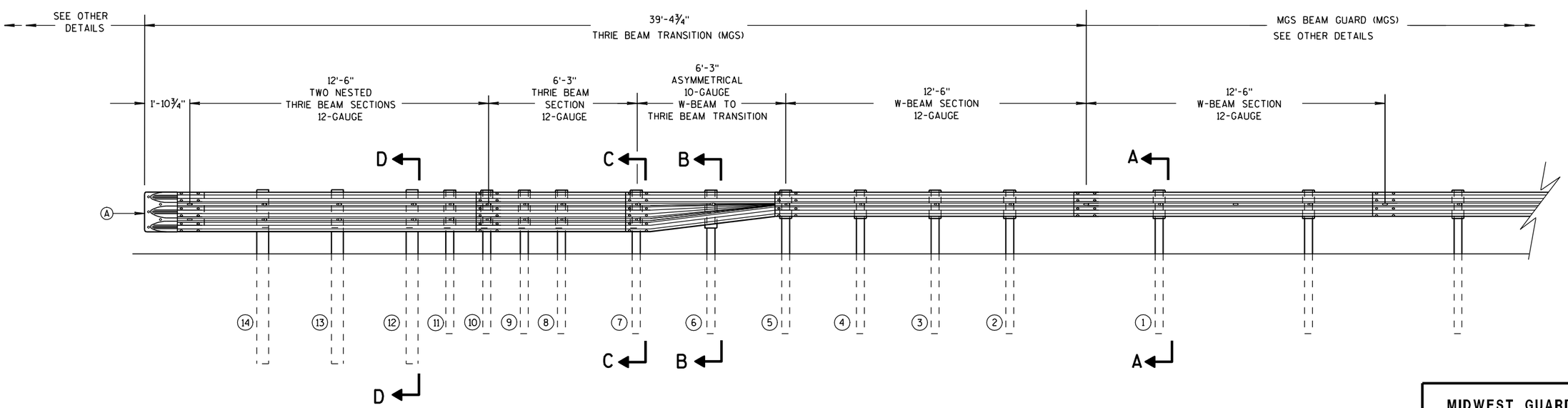

ELEVATION VIEW

MIDWEST GUARDRAIL SYSTEM THRIE BEAM TRANSITION

MIDWEST GUARDRAIL SYSTEM
THRIE BEAM TRANSITION (MGS)

STATE OF WISCONSIN
DEPARTMENT OF TRANSPORTATION

6

6

S.D.D. 14 B 45-2a

S.D.D. 14 B 45-2a

GENERAL NOTES

(B) TOLERANCE FOR TOP OF W-BEAM RAIL IS ± 1".

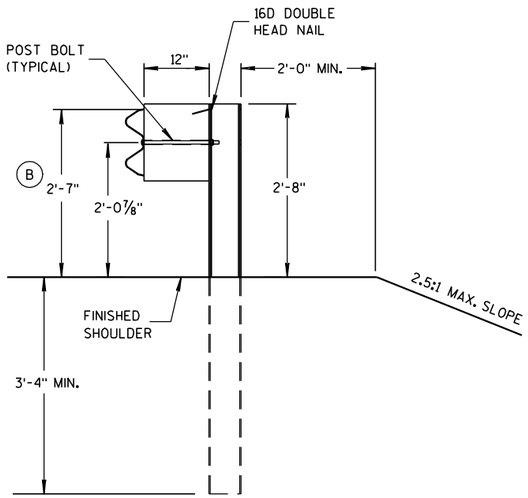

SECTION A-A

POSTS 1-5

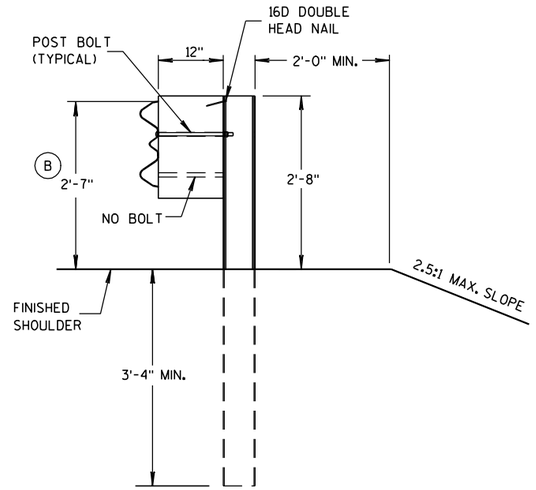

SECTION B-B

POST 6

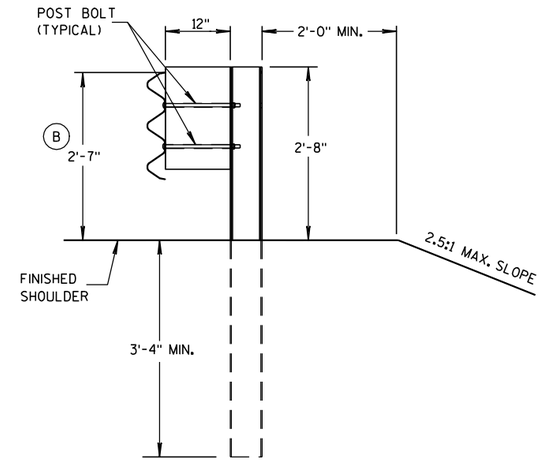

SECTION C-C

POSTS 7-11

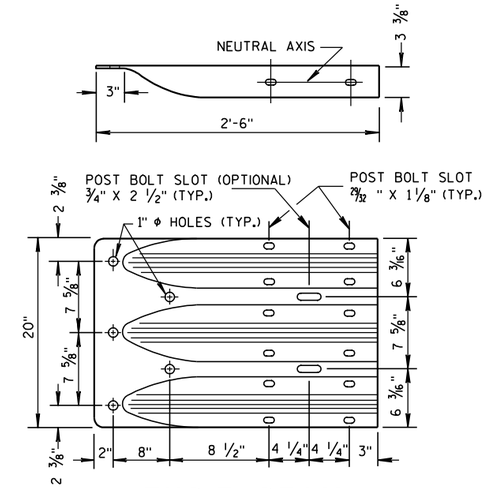

THRIE BEAM TERMINAL CONNECTOR

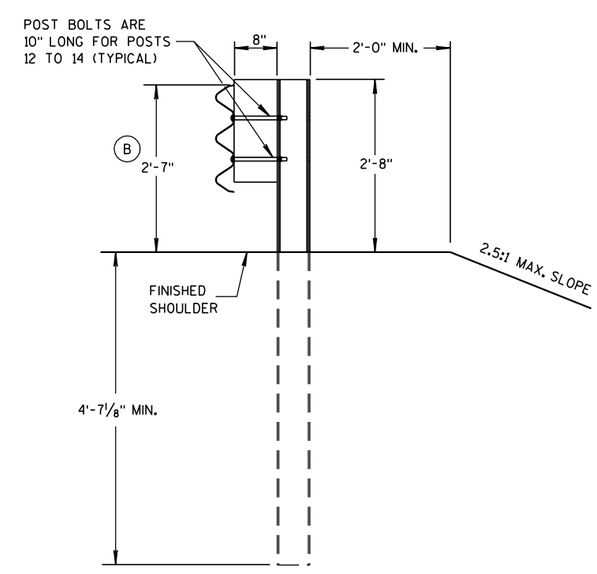

SECTION D-D

POSTS 12-14

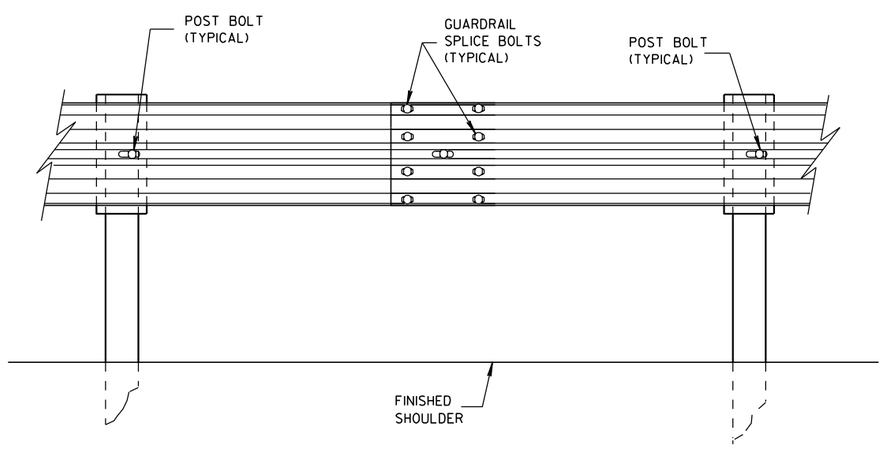

SPLICE DETAIL

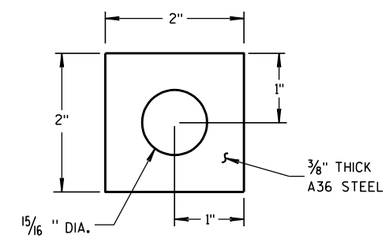

PLATE WASHER DETAIL

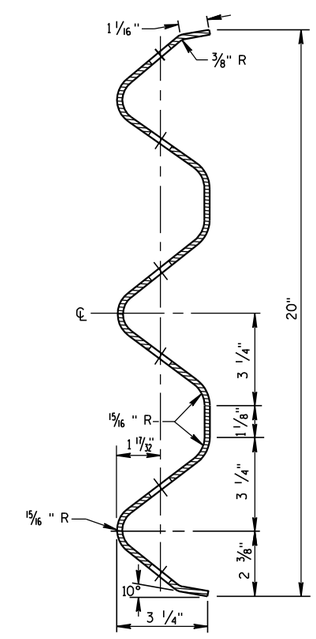

SECTION THRU THRIE BEAM RAIL ELEMENT

MIDWEST GUARDRAIL SYSTEM
THRIE BEAM TRANSITION (MGS)

STATE OF WISCONSIN
DEPARTMENT OF TRANSPORTATION

6

6

S.D.D. 14 B 45-2b

S.D.D. 14 B 45-2b

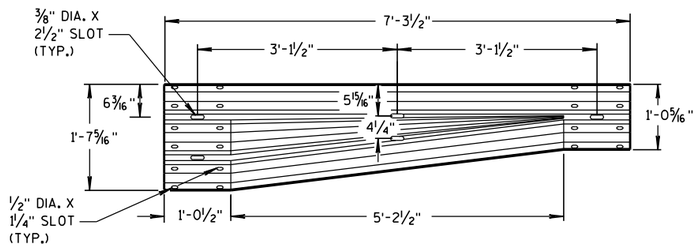

W-BEAM TO THRIE BEAM TRANSITION SECTION

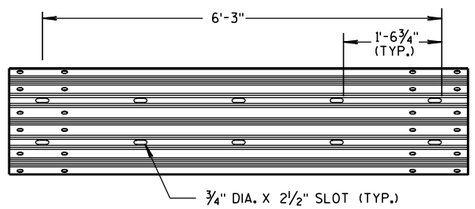

6'-3" THRIE BEAM SECTION

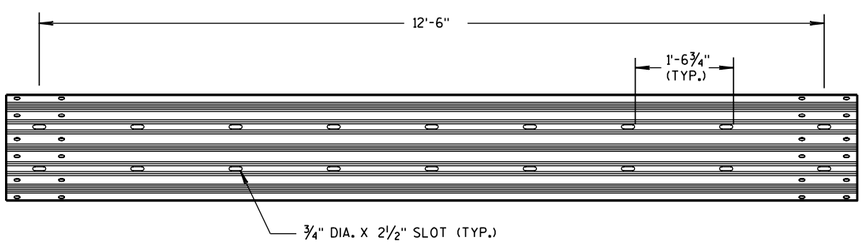

12'-6" THRIE BEAM SECTION

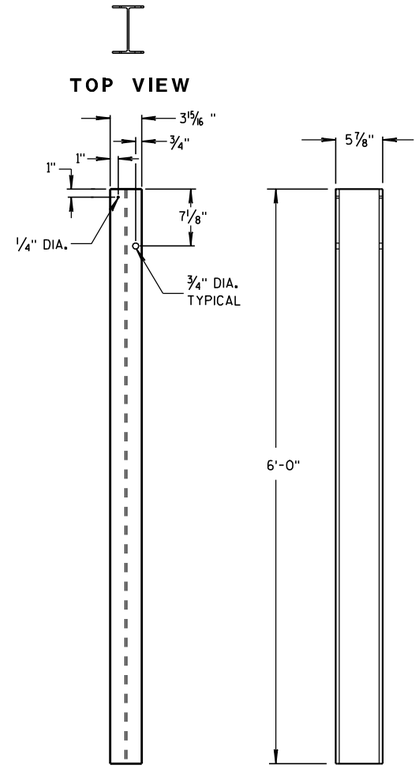

STEEL POSTS 1-5

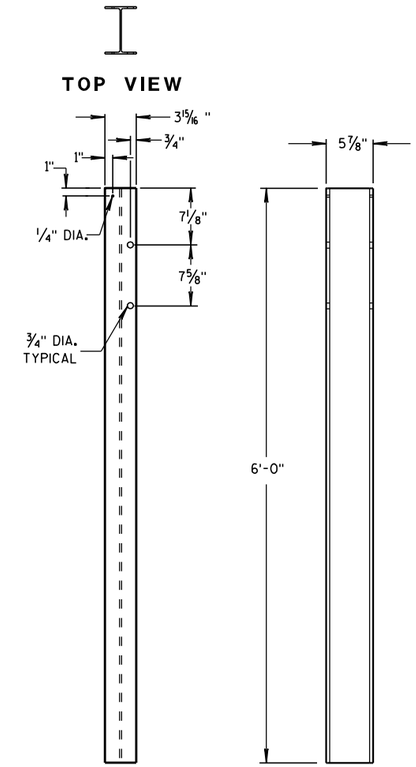

STEEL POSTS 6-11

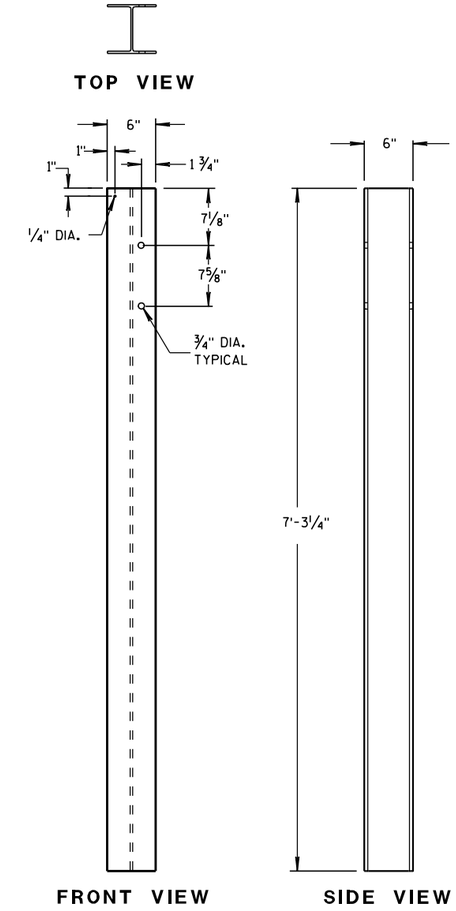

STEEL POSTS 12-14

(1) WOOD BLOCKS MAY BE CONSTRUCTED OUT OF 2 WOOD BLOCKS. SEE ALTERNATE WOOD BLOCK DETAIL.

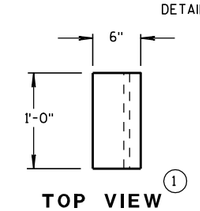

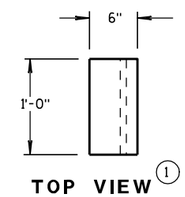

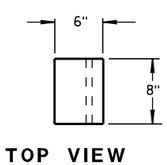

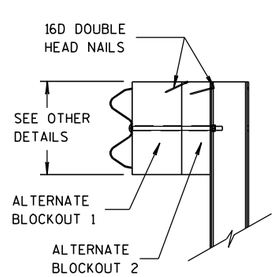

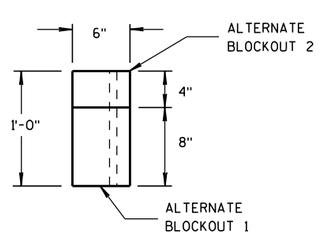

ALTERNATE WOOD BLOCKOUT DETAIL

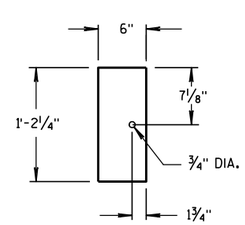

BLOCKOUT POSTS 1-5

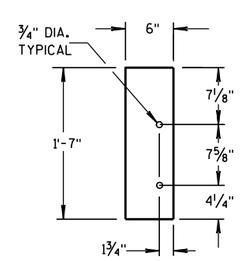

BLOCKOUT POSTS 6-11

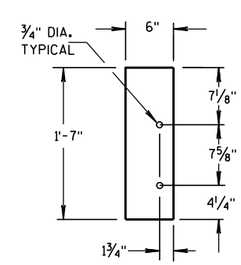

BLOCKOUT POSTS 12-14

STEEL POST SIZES

POST NUMBER	SECTION TYPE	LENGTH
1	W6x9	72"
2	W6x9	72"
3	W6x9	72"
4	W6x9	72"
5	W6x9	72"
6	W6x9	72"
7	W6x9	72"
8	W6x9	72"
9	W6x9	72"
10	W6x9	72"
11	W6x9	72"
12	W6x15	87 1/8"
13	W6x15	87 1/8"
14	W6x15	87 1/8"

MIDWEST GUARDRAIL SYSTEM
THRIE BEAM TRANSITION (MGS)

STATE OF WISCONSIN
DEPARTMENT OF TRANSPORTATION

6

6

S.D.D. 14 B 45-2c

S.D.D. 14 B 45-2c

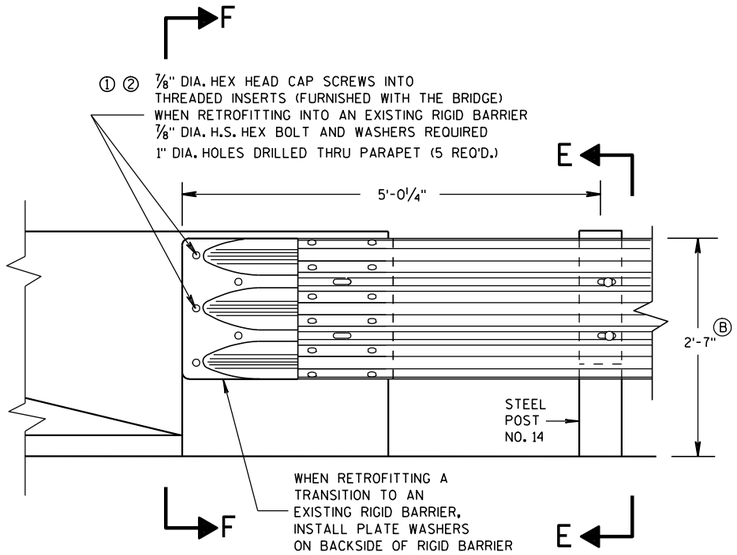

FRONT VIEW

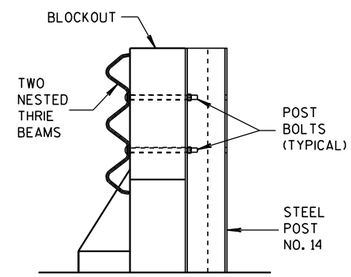

SECTION E-E

THRIE BEAM CONNECTION TO BRIDGE PARAPET WITH SQUARE ENDS

GENERAL NOTES

THESE ARE TYPICAL CONNECTION DETAILS. ADJUST THE POSTION OF CONNECTIONS TO EXISTING BRIDGES TO FIT THE ACTUAL BRIDGE AND SITE DIMENSIONS.

① INCLUDE THE PAYMENT FOR DRILLING BOLT HOLES THROUGH THE PARAPET, AND ALL BOLTS, NUTS AND WASHERS IN THE ITEM "STEEL THRIE BEAMSTRUCTURAL APPROACH".

② BOLTS MAY BE A325 BOLTS OR A449 BOLTS. BOLT LENGTH AND THREADING LENGTH ARE TO ALLOW FOR A TIGHT CONNECTION BETWEEN RIGID BARRIER AND THRIE BEAM CONNECTION PLATE. CONTRACTOR IS TO FIELD VERIFY BOLT LENGTH AND THREAD LENGTH. ONE ROUND WASHER REQUIRED BETWEEN BOLT HEAD AND THRIE BEAM CONNECTOR PLATE. BOLTS THAT EXTEND THROUGH THE PARAPET AND OUT THE BACK FACE REQUIRE A HARDENED ROUND STEEL WASHER THAT IS 2" O.D. X 5/8" THICK AND ONE PLATE WASHER. REPAIR ANY DAMAGED CONCRETE FROM BOLT INSTALLATION.

③ THE RECESS FOR A W-BEAM CONNECTION, WHICH EXISTS ON SOME PARAPETS OF THIS TYPE, SHALL BE FILLED WITH A TREATED TIMBER BLOCKOUT. BLOCKOUT SIZE IS 1'-6" X 2'-0" X 3 1/2".

Ⓑ TOLERANCE FOR TOP OF BEAM IS ± 1".

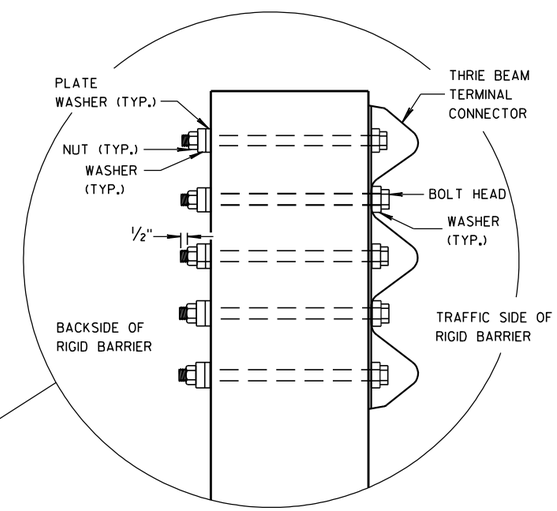

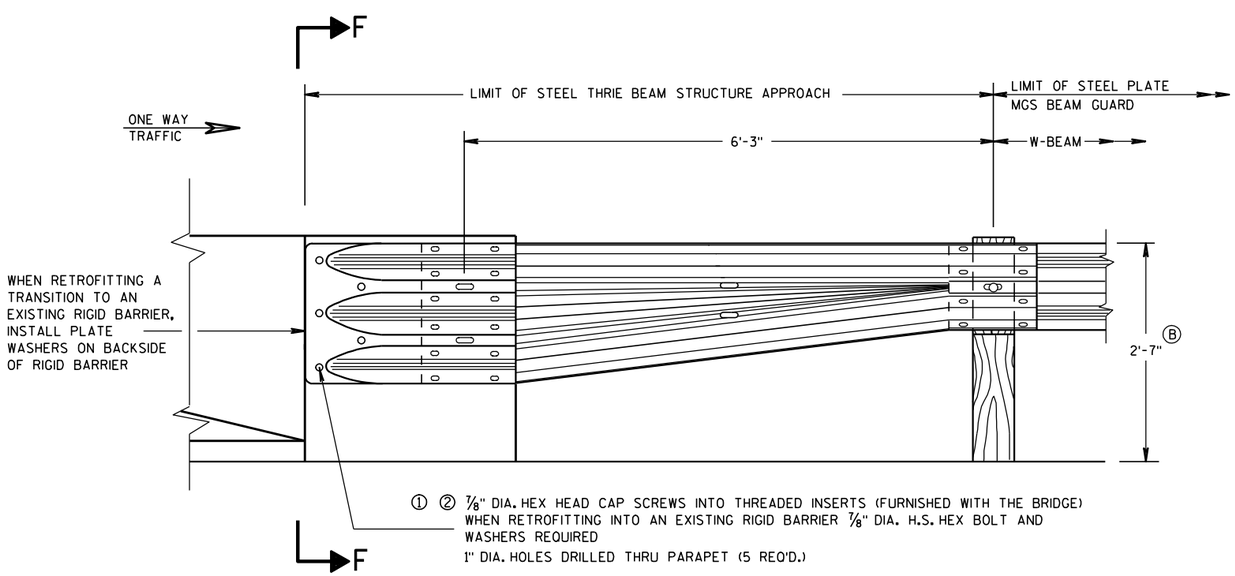

FRONT VIEW

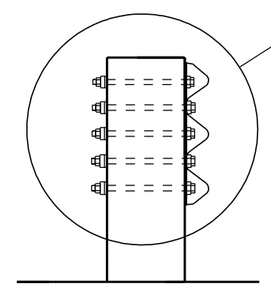

SECTION F-F

W BEAM TRANSITION AND CONNECTION TO BRIDGE PARAPETS WITH SQUARE ENDS

(USE ONLY ON THE TRAFFIC EXIT END OF ONE WAY BRIDGES)

MIDWEST GUARDRAIL SYSTEM THRIE BEAM TRANSITION (MGS)

STATE OF WISCONSIN
DEPARTMENT OF TRANSPORTATION

APPROVED
2/8/2012 — DATE
/S/ Jerry H. Zogg — ROADWAY STANDARDS DEVELOPMENT ENGINEER
FHWA

6

S.D.D. 14 B 45-2d

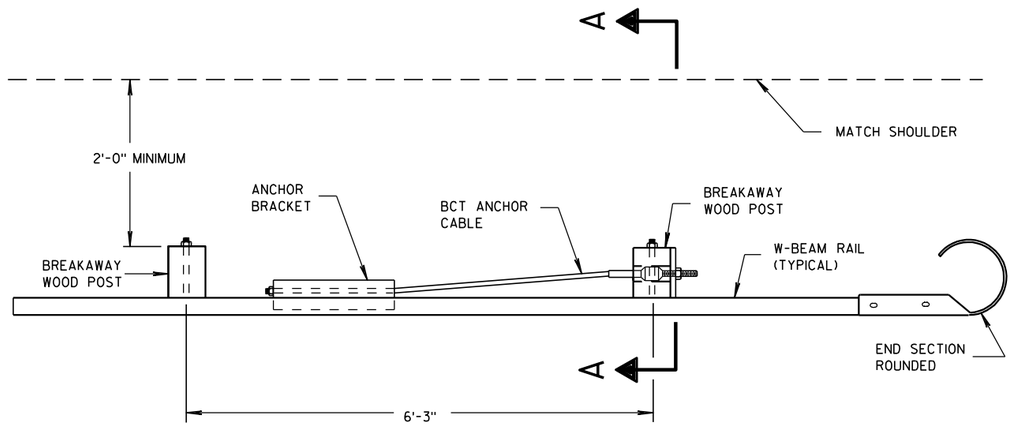

PLAN VIEW

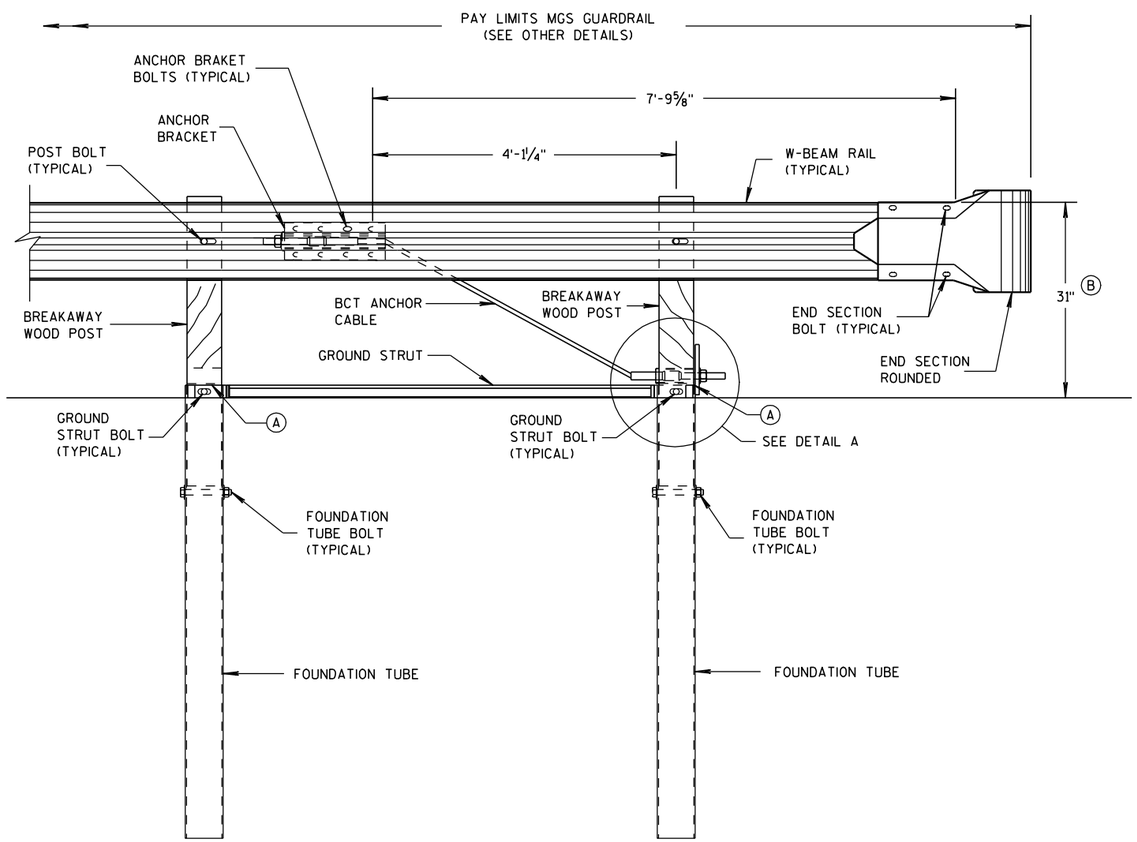

FRONT VIEW

END RAIL DETAIL

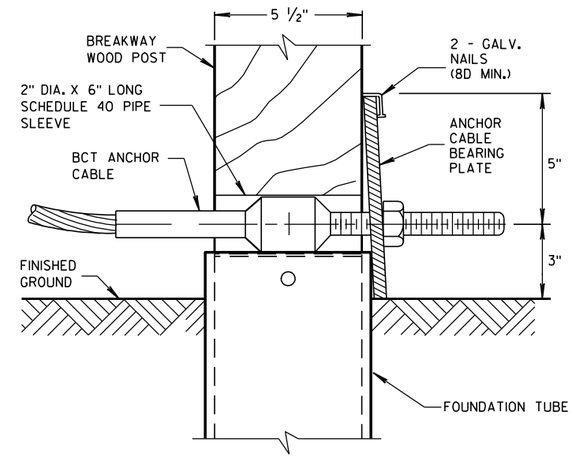

DETAIL A

POST NO. 1
GROUNG STRUT NOT SHOWN FOR CLARITY.

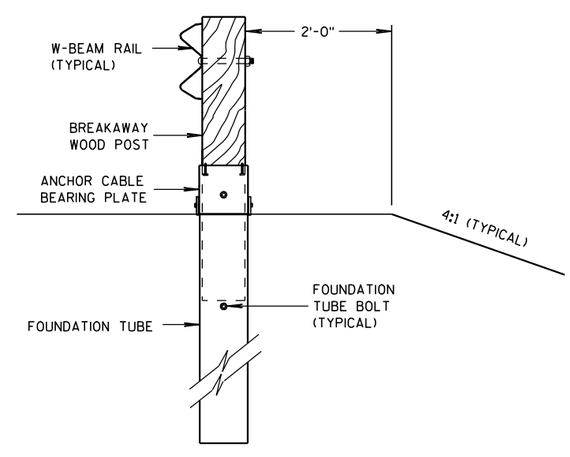

SECTION A-A

GENERAL NOTES

SEE SDD 14 B 42 FOR MORE INFORMATION.

POST BOLTS ARE A ⅝" DIAMETER X 10" LONG GUARDRAIL BOLT. A POST BOLT REQUIRES A ⅝" DIAMETER DH MODIFIED (RECESSED) HEAVY HEX NUT AND ⅝" DIAMETER FLAT WASHER.

FOUNDATION TUBE BOLTS ARE A ⅞" DIAMETER X 7½" LONG HEAVY HEX HEAD BOLT. A FOUNDATION TUBE BOLT REQUIRES A ⅞" DIAMETER DH HEAVY HEX NUT AND A ⅝" DIAMETER FLAT WASHER.

GROUND STRUT BOLTS ARE A ⅝" DIAMETER X 10" LONG HEAVY HEX HEAD BOLT. A GROUND STRUT BOLT REQUIRES A ⅝" DIAMETER DH HEAVY HEX NUT AND A ⅝" DIAMETER FLAT WASHER.

ANCHOR BRAKET BOLTS ARE A ⅝" DIAMETER X 1½" LONG HEAVY HEX HEAD BOLT. AN ANCHOR BRAKET BOLT REQUIRES A ⅝" DIAMETER DH HEAVY HEX NUT AND A FLAT WASHER.

END SECTION BOLTS ARE A ⅝" DIAMETER X 1½" HEAVY HEX HEAD BOLT. AN END SECTION BOLT REQUIRES ⅝" DIAMETER DH HEAVY HEX NUT AND A ⅝" DIAMETER FLAT WASHER.

W-BEAM END SECTION ROUNDED HAS THE SAME MATERIAL PROPERTIES AS STANDARD STEEL RAIL.

(A) TOP OF FOUNDATION TUBE SHALL BE NO MORE THAN 3" ABOVE FINISHED GROUND.

(B) FOR NEW CONSTRUCTION TOP OF RAIL IS 31" ± 1".
FOR EXISTING INSTALLATIONS TOP OF RAIL IS BETWEEN 27¾" TO 32" ± 1".

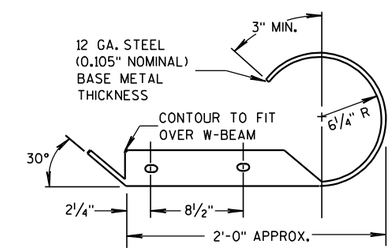

PLAN VIEW

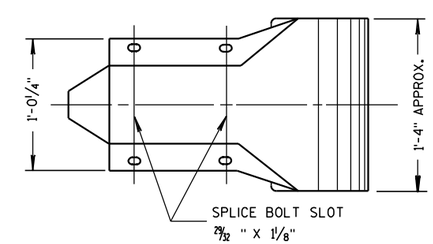

FRONT VIEW

W BEAM END SECTION ROUNDED

MIDWEST GUARDRAIL SYSTEM (MGS) TYPE 2 TERMINAL

STATE OF WISCONSIN
DEPARTMENT OF TRANSPORTATION

6

S.D.D. 14 B 47-1a

GENERAL NOTES

BCT ANCHOR CABLE IS A 3/8" DIAMETER 6X19 IWRC IPS GALVANIZED WIRE ROPE. THE SWAGED FITTINGS AND STUD ARE REQUIRED. THE END FITTING SHALL BE MACHINED FROM HOT-ROLLED CARBON STEEL CONFORMING TO ASTM A576 GRADE 1035 AND GALVANIZED ACCORDING TO ASTM A123. THE TREADED STUD SHOULD CONFORM TO ASTM A325 OR SAE GRADE 5. MINIMUM BREAKING STRENGTH OF WIRE ROPE IS 43,000 LB. TIGHTEN WIRE ROPE TO TAUT.

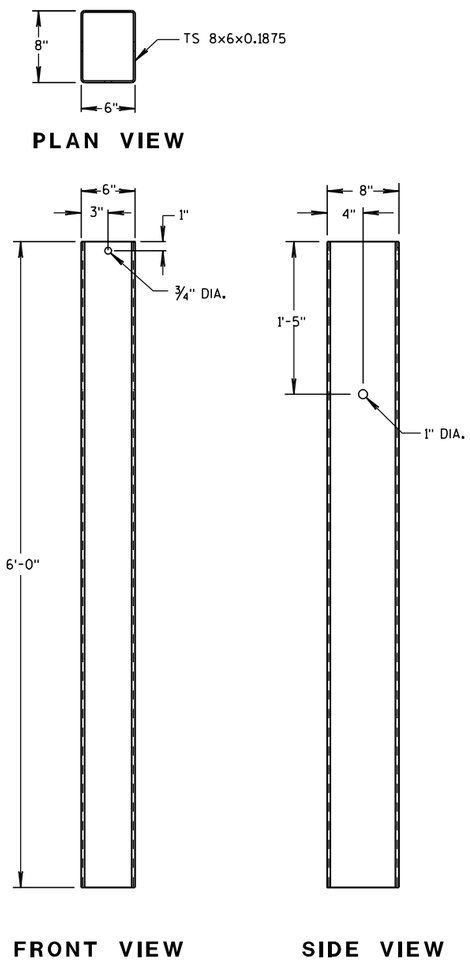

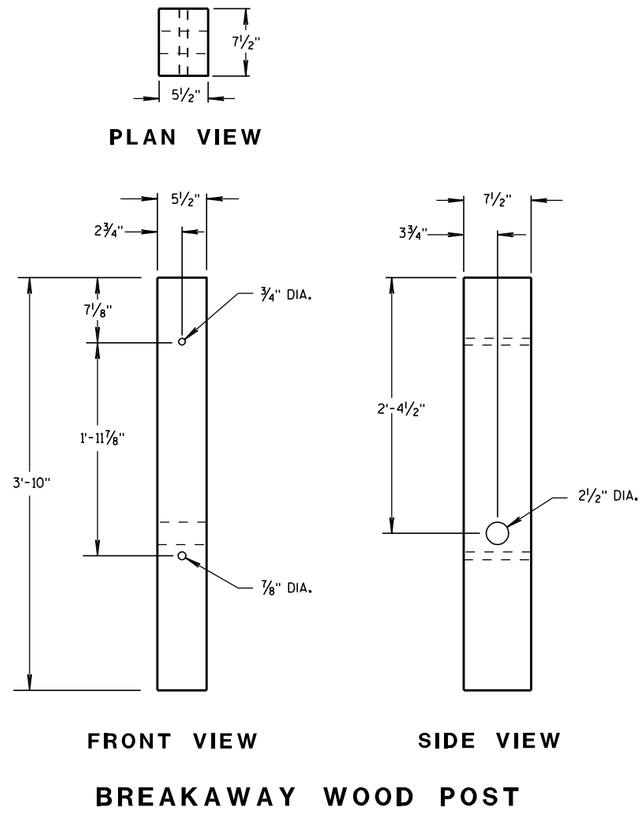

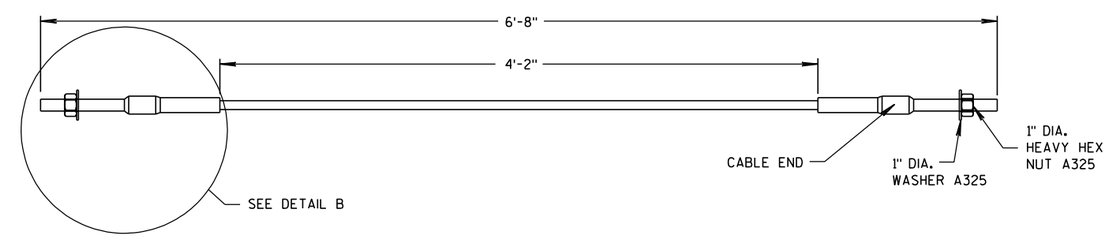

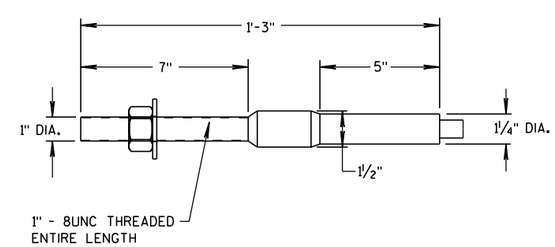

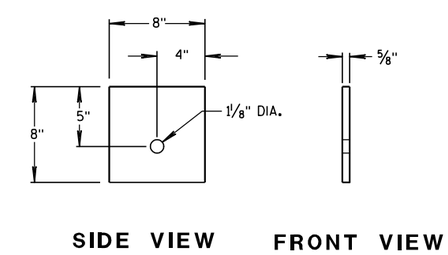

MIDWEST GUARDRAIL
SYSTEM (MGS) TYPE 2 TERMINAL

STATE OF WISCONSIN
DEPARTMENT OF TRANSPORTATION

6

6

S.D.D. 14 B 47-1b

S.D.D. 14 B 47-1b

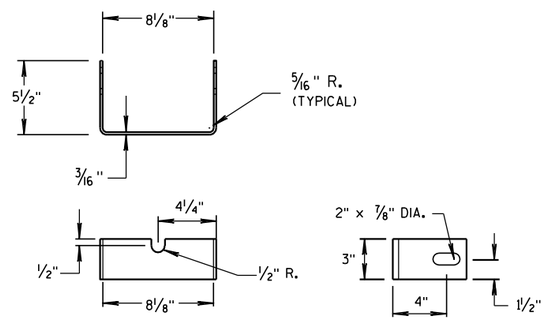

YOKE DETAIL

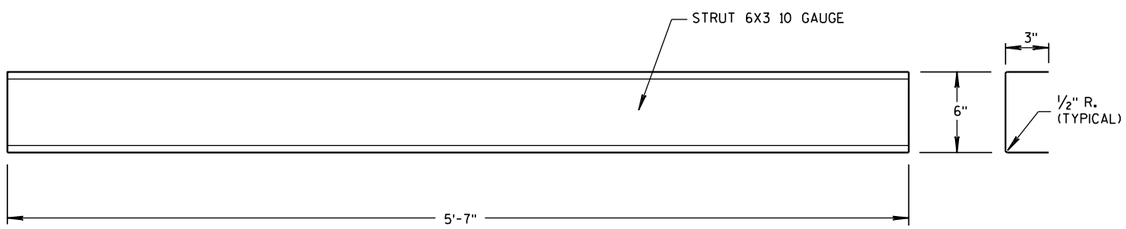

STRUT DETAIL

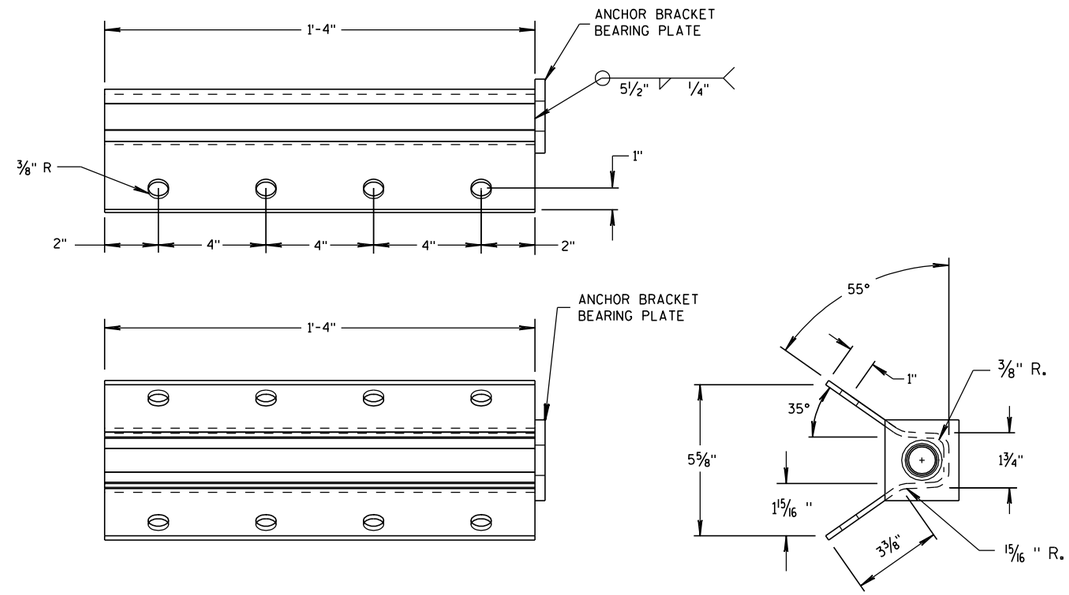

ANCHOR BRACKET

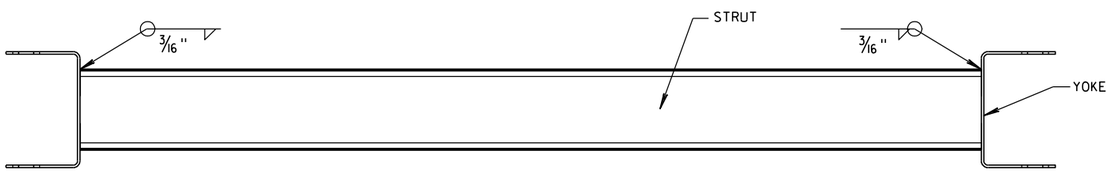

PLAN VIEW

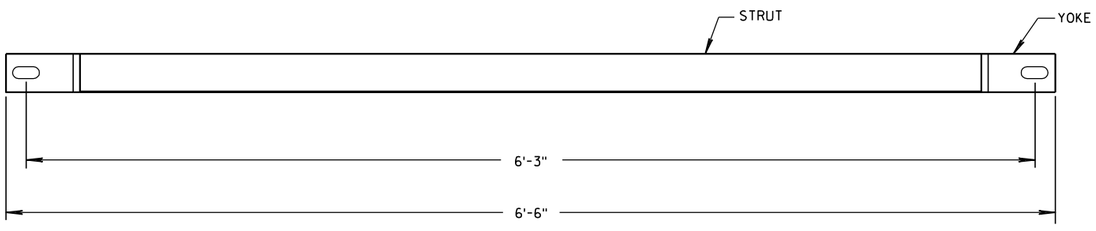

FRONT VIEW

GROUND STRUT DETAIL

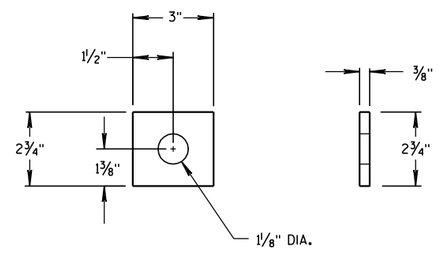

ANCHOR BRACKET
BEARING PLATE

MIDWEST GUARDRAIL
SYSTEM (MGS) TYPE 2 TERMINAL

STATE OF WISCONSIN
DEPARTMENT OF TRANSPORTATION

APPROVED

5/23/2011 — DATE

/S/ Jerry H. — ROADWAY STANDARDS ENGINEER

FHWA

6

S.D.D. 14 B 47-1c

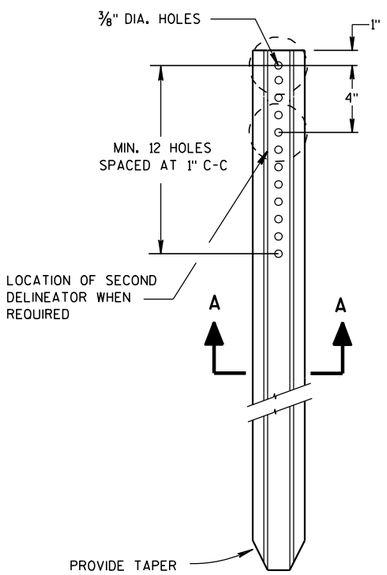

DELINEATOR POST

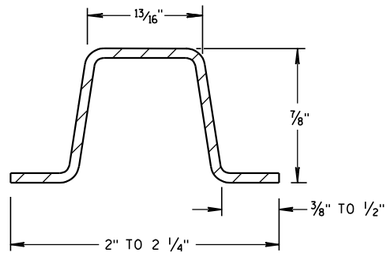

SECTION A-A

WEIGHT 1.12 LBS PER FT. ± 0.1 LB.

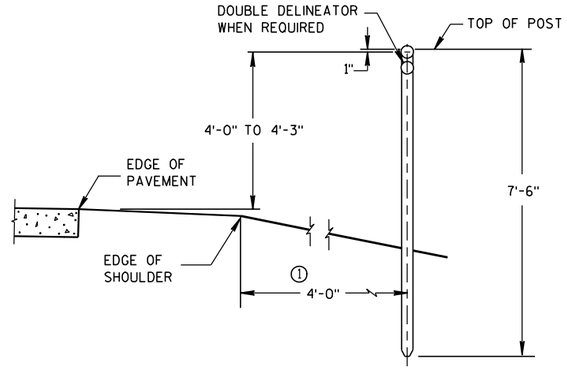

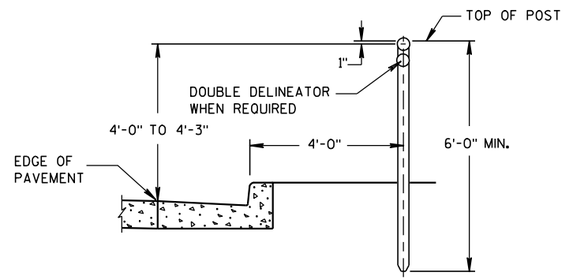

TYPICAL INSTALLATIONS OF DELINEATOR POSTS

GENERAL NOTES

DETAILS OF CONSTRUCTION NOT SHOWN ON THIS DRAWING SHALL CONFORM TO THE PERTINENT REQUIREMENTS OF THE STANDARD SPECIFICATIONS AND THE APPLICABLE SPECIAL PROVISIONS.

① DELINEATORS SHALL BE PLACED AT A CONSTANT DISTANCE FROM THE EDGE OF THE SHOULDER FOR THE LENGTH OF THE INSTALLATION.

NOTE:
FASTEN DELINEATOR TO BRACKET WITH BOLTS 3/16" DIA. X LENGTH REQ'D. WITH WASHER AND LOCKNUT OR EQUIVALENT RIVETS.

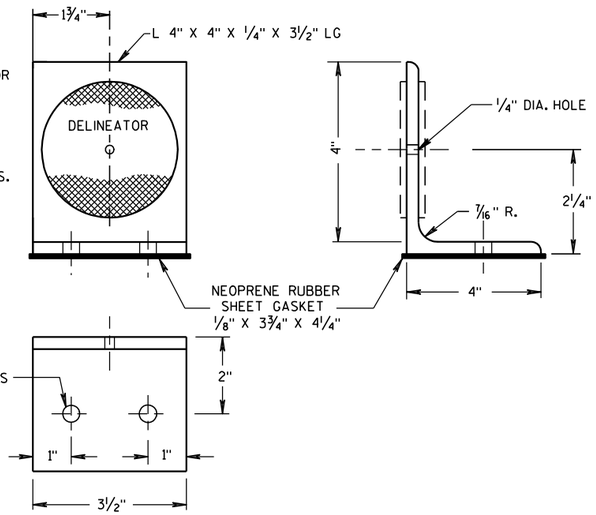

DELINEATOR BRACKET

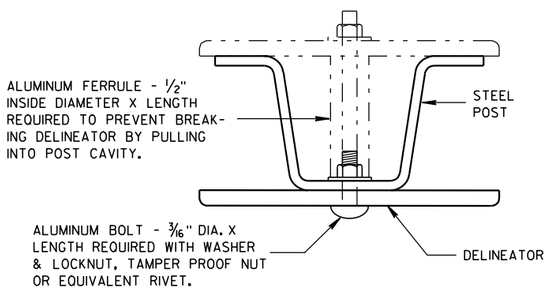

MOUNTING DETAIL FOR DELINEATOR

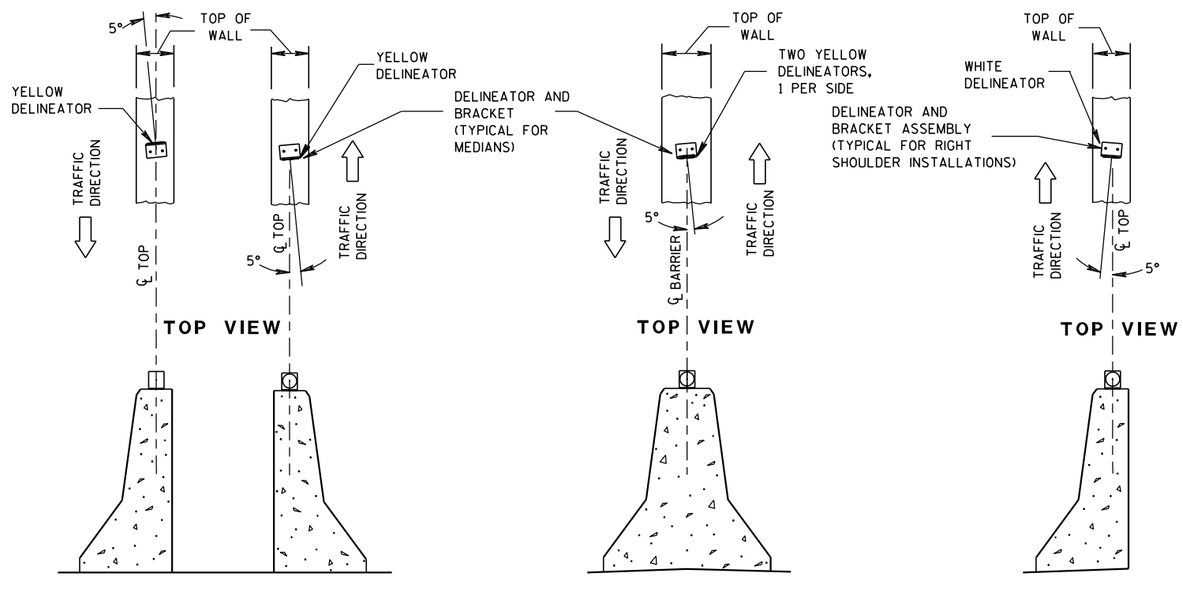

DOUBLE BARRIERS IN MEDIAN

MEDIAN BARRIER

BARRIER LOCATED TO RT. OF TRAFFIC FLOW

LOCATION AND AIMING DETAILS FOR DELINEATORS MOUNTED ON CONCRETE BARRIERS

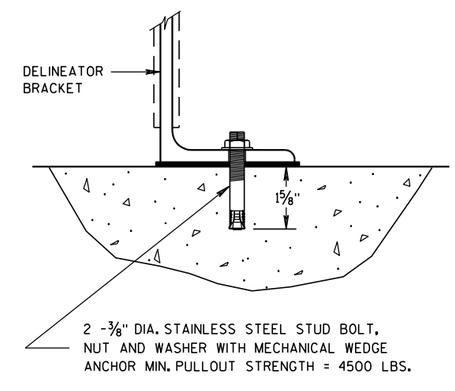

DELINEATOR BRACKET MOUNTING DETAIL

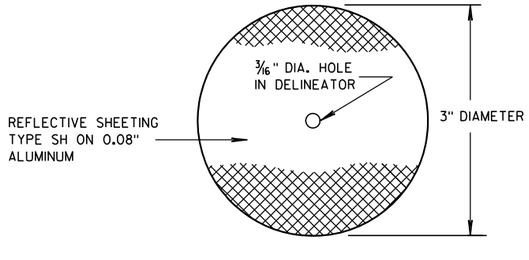

DELINEATOR

DELINEATOR POST, DELINEATOR BRACKET AND DELINEATOR	
STATE OF WISCONSIN DEPARTMENT OF TRANSPORTATION	
APPROVED 1/25/2011 DATE	/S/ Thomas N. Notbohm STATE TRAFFIC ENGINEER DESIGN
FHWA	

6

6

S.D.D. 15 A 2-7

S.D.D. 15 A 2-7

GENERAL NOTES

* USE DOUBLE DELINEATOR ALONG ACCELERATION-DECELERATION LANES AND TAPERS. USE SINGLE DELINEATOR WHEN RAMP PAVEMENT IS FULL WIDTH.

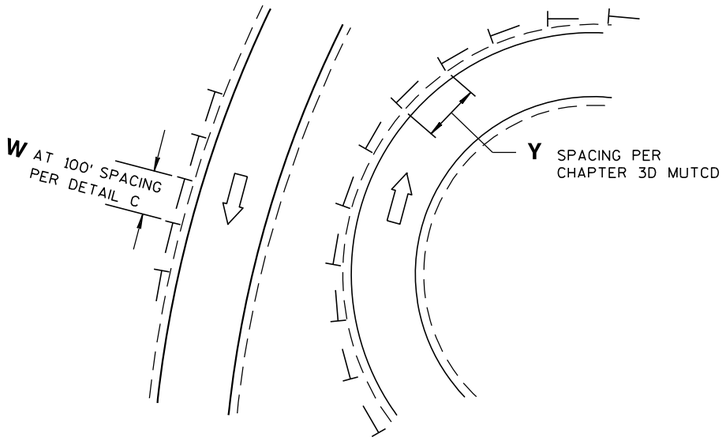

DETAIL A
DELINEATOR LAYOUT AT CURVED RAMP

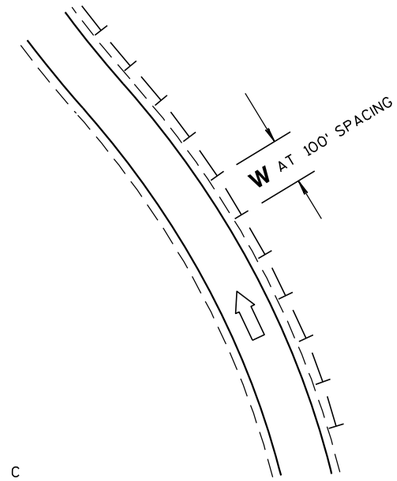

DETAIL C
DELINEATOR LAYOUT ALONG RAMP

LEGEND

⇨	DIRECTION OF TRAFFIC FLOW
⊥	SINGLE DELINEATOR
⊥⊥	DOUBLE DELINEATOR
W	WHITE
Y	YELLOW

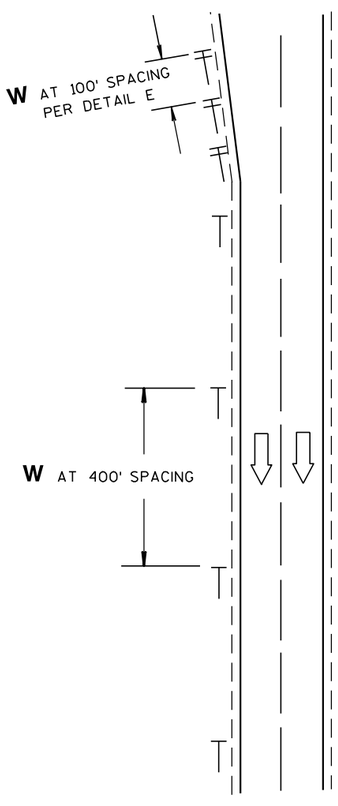

DETAIL B
DELINEATOR LAYOUT ALONG MAINLINE

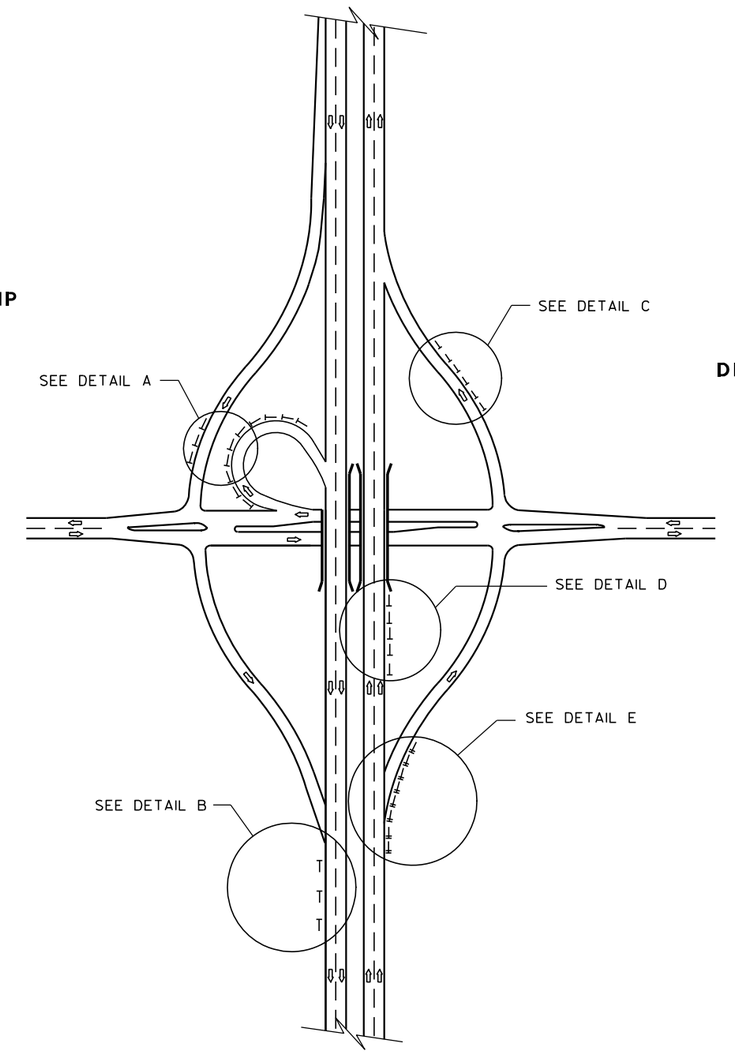

DELINEATOR LAYOUT

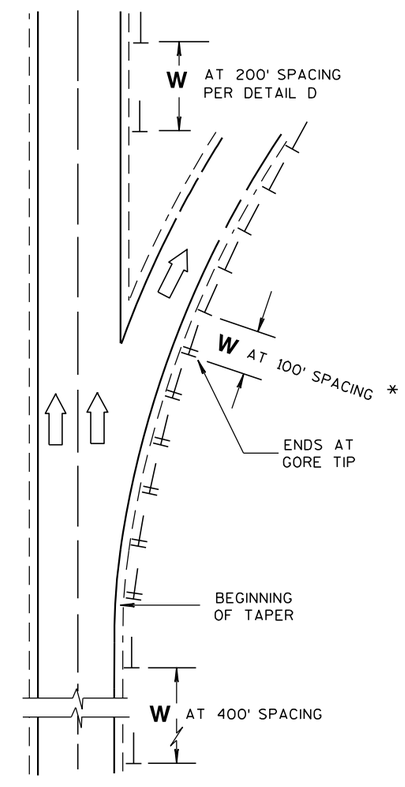

DETAIL E
DELINEATOR LAYOUT FOR ACCELERATION - DECELERATION LANES AND TAPERS AT RAMPS

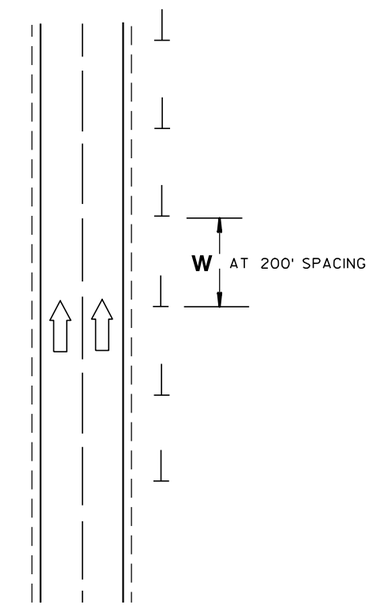

DETAIL D
DELINEATOR LAYOUT BETWEEN INTERCHANGE RAMPS

DELINEATOR LAYOUT

STATE OF WISCONSIN
DEPARTMENT OF TRANSPORTATION

APPROVED
2/5/09 — DATE
/S/ Thomas N. Notbohm — STATE TRAFFIC ENGINEER
FHWA

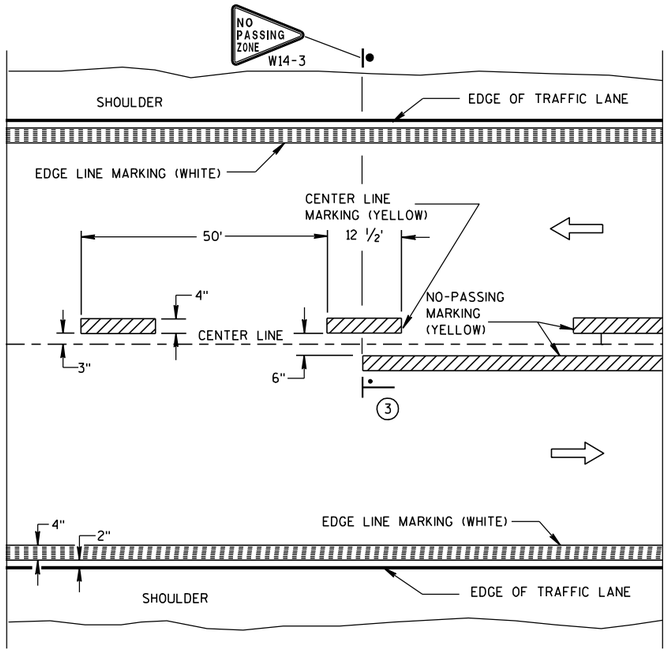

TWO WAY TRAFFIC

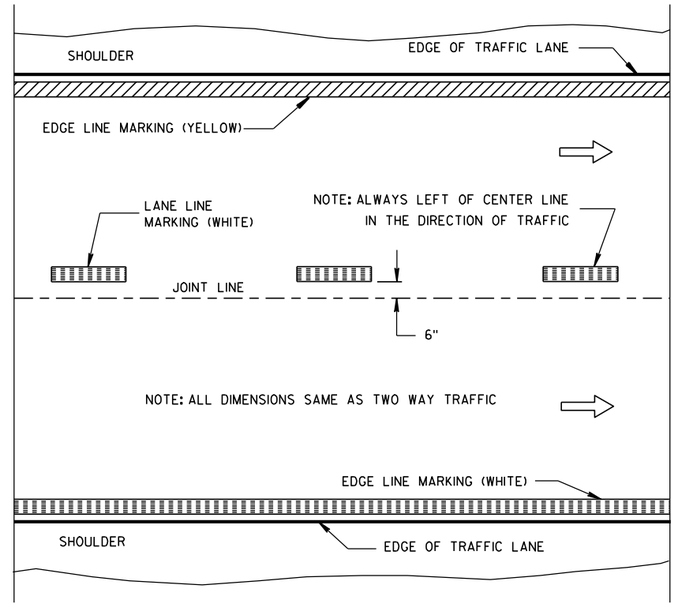

ONE WAY TRAFFIC

PERMANENT PAVEMENT MARKING

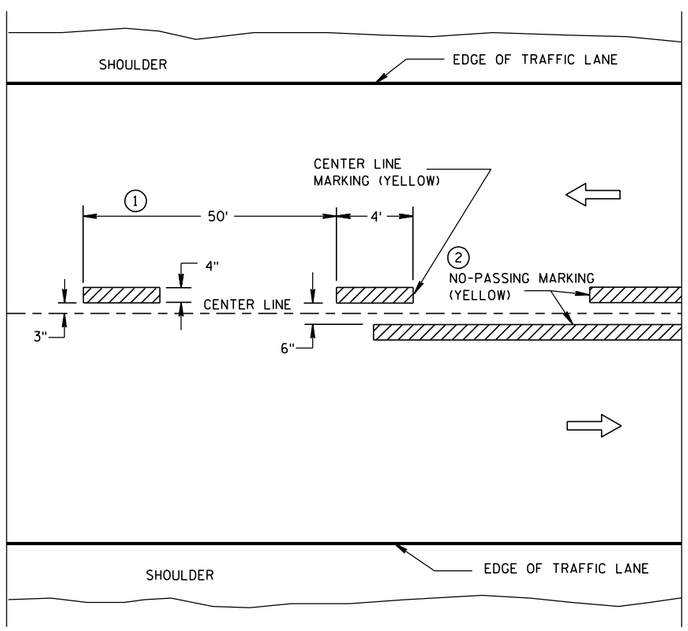

TWO WAY TRAFFIC

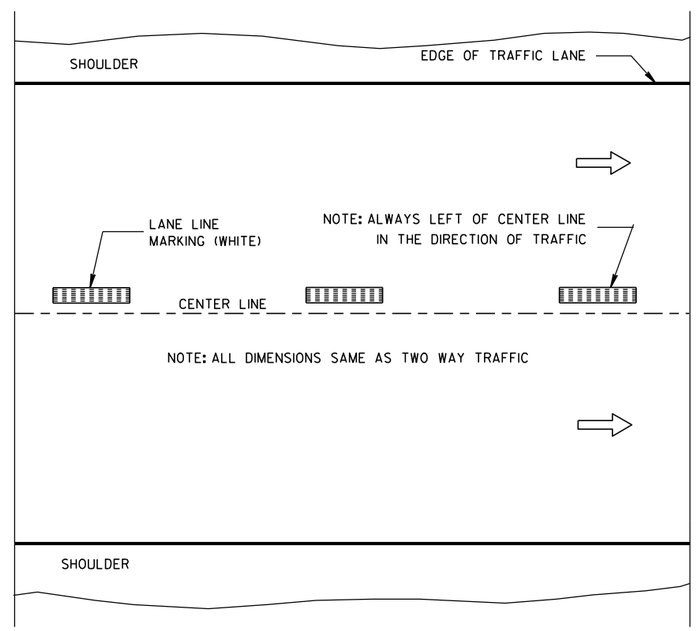

ONE WAY TRAFFIC

TEMPORARY (INTERMEDIATE) PAVEMENT MARKING

(SHOWS CYCLE FOR TEMPORARY CENTER LINE OR TEMPORARY LANE LINE MARKING)

GENERAL NOTES

DETAILS OF CONSTRUCTION NOT SHOWN ON THIS DRAWING SHALL CONFORM TO STANDARD SPECIFICATIONS AND SPECIAL PROVISIONS.

1. HALF CYCLE LENGTHS (25'±) WITH 2' MINIMUM STRIPE LENGTHS SHALL BE PROVIDED ON ROADWAYS (INCLUDING TEMPORARY TRAVELED WAYS) WITH REVERSE CURVATURE, CURVATURE OF OVER 5 DEGREES OR WHEN DIRECTED BY THE ENGINEER TO MARK UNUSUAL ALIGNMENT OF THE TRAVELED WAY.

2. NO PASSING ZONE TEMPORARY PAVEMENT MARKING IS REQUIRED TO BE PLACED, WHERE APPROPRIATE, ALONG WITH CENTERLINE TEMPORARY PAVEMENT MARKING WHEN A SAME DAY PERMANENT PAVEMENT MARKING ITEM IS INCLUDED IN THE CONTRACT.

3. NO PASSING ZONE MARKINGS ARE PLACED ACCORDING TO "T" MARKINGS. IF EXISTING NO PASSING ZONE W14-3 SIGNS ARE BEYOND 50 FEET IN EITHER DIRECTION, THE SIGNS SHALL BE MOVED TO THE "T" MARKINGS.

NOTE

ARROW SYMBOL (⇨) SHOWS DIRECTION OF TRAVEL

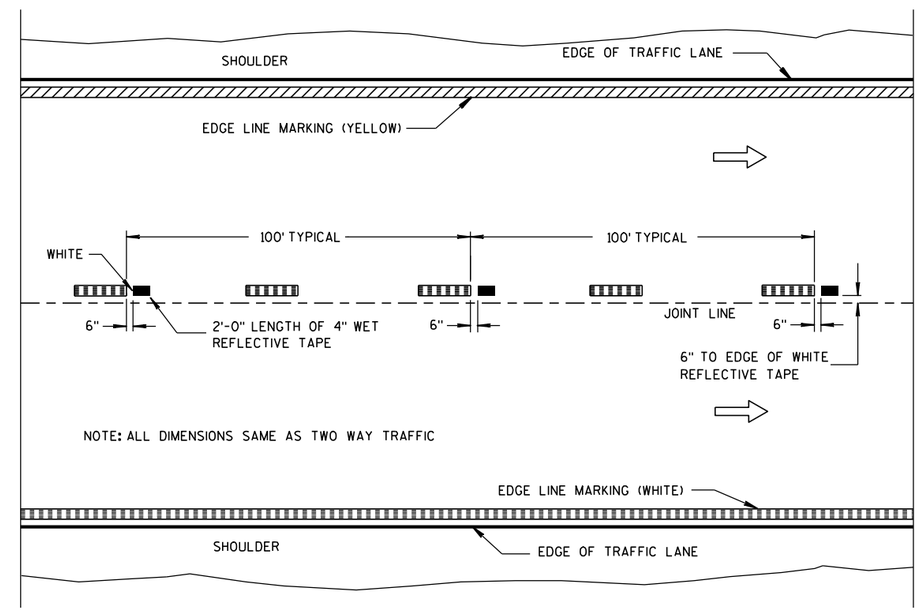

WET REFLECTIVE TAPE SUPPLEMENT TO SPRAYED OR NON WET REFLECTIVE TAPE LANE LINE

LEGEND

"T" MARKING

POST MOUNTED SIGN

PAVEMENT MARKING (MAINLINE)

STATE OF WISCONSIN
DEPARTMENT OF TRANSPORTATION

APPROVED
6-23-11 /S/ Thomas N. Notbohm
DATE STATE TRAFFIC ENGINEER
FHWA

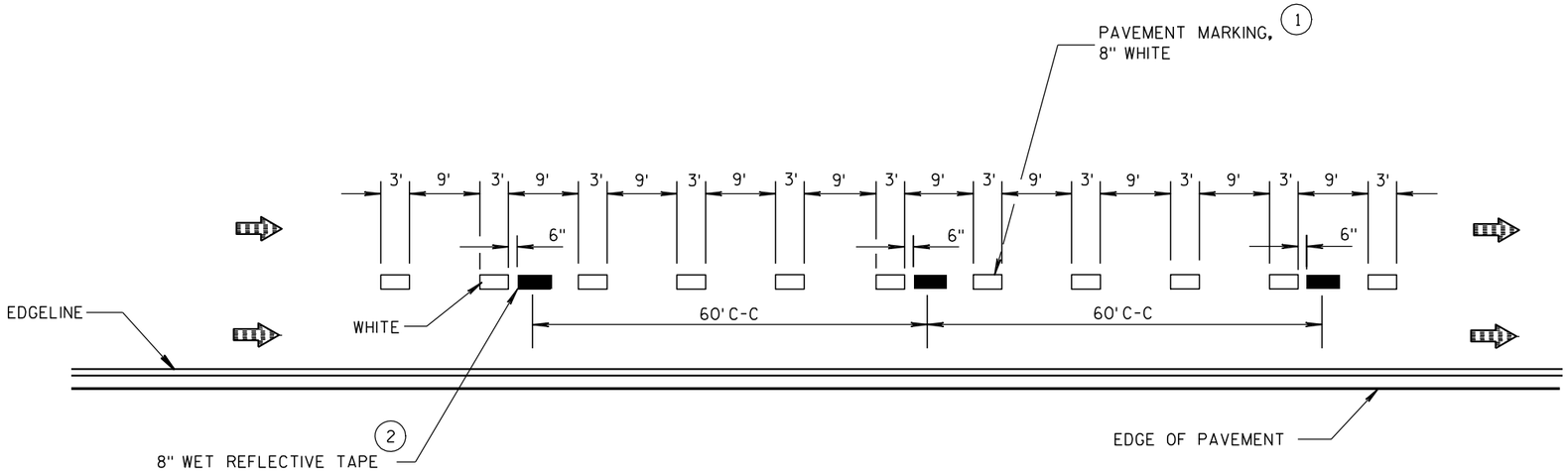

SPRAYED OR NON WET REFLECTIVE DROP LANE LINE SUPPLEMENTED BY WET REFLECTIVE TAPE SEGMENT

GENERAL NOTES

1. 3' LINE 9' GAP, EXCEPT RETRACE THE EXISTING LINE - GAP PATTERN WHERE EXISTING MARKINGS ARE IN PLACE. RETRACE EXISTING 4" MARKING WITH 8" MARKING.
2. REPLACE SAME 4" WET REFLECTIVE TAPE WHERE EXISTING 4" TAPE IS IN PLACE.
3. 3' LINE 9' GAP, EXCEPT REPLACE THE EXISTING LINE - GAP PATTERN AND WIDTH OF TAPE WHERE EXISTING TAPE IS IN PLACE.

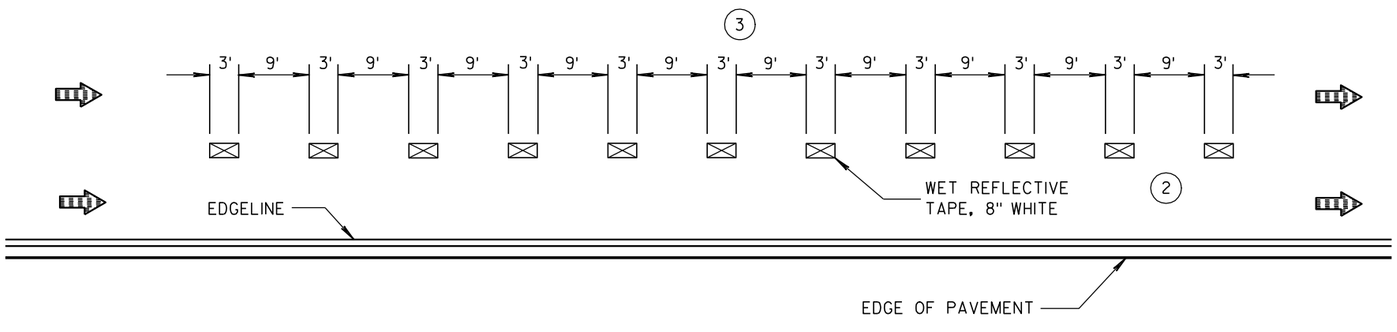

DROP LANE DETAIL FOR NEW WET REFLECTIVE TAPE INSTALLATIONS

LEGEND

- 2.0' LENGTH OF WET REFLECTIVE TAPE
- 3.0' LENGTH OF WET REFLECTIVE TAPE
- DROP LANE MARKING SPRAYED OR NON WET REFLECTIVE TAPE
- DIRECTION OF TRAFFIC

PAVEMENT MARKINGS FOR DROP LANES FREEWAY/EXPRESSWAY

STATE OF WISCONSIN
DEPARTMENT OF TRANSPORTATION

APPROVED
5/13/10 — DATE
/S/ Thomas N. Nethercutt — STATE TRAFFIC ENGINEER
FHWA

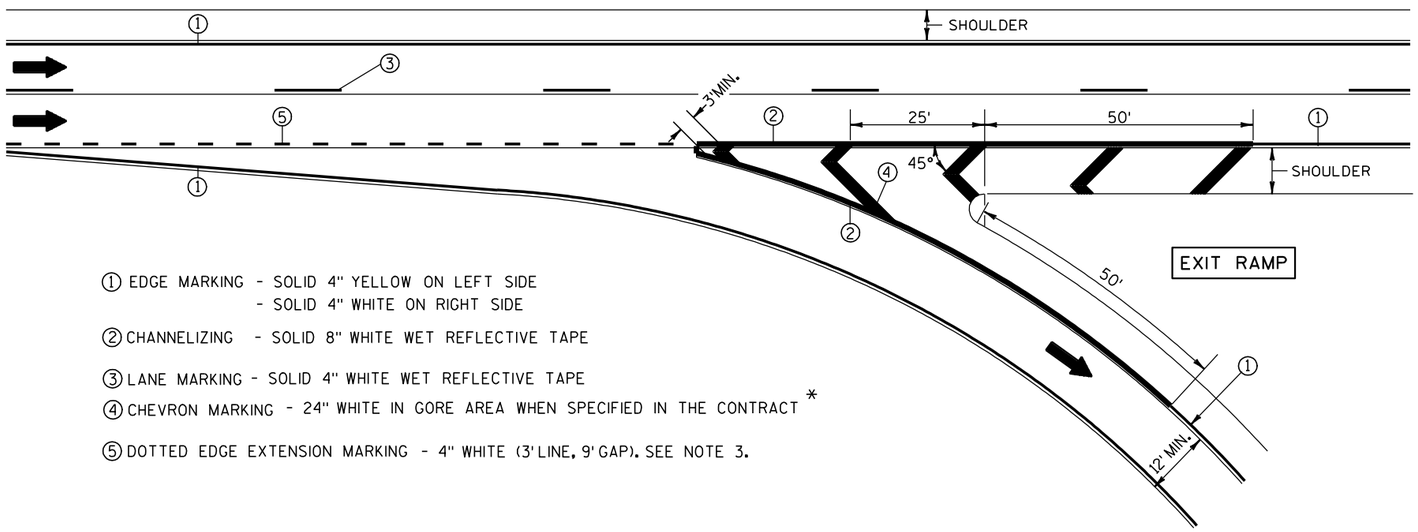

① EDGE MARKING - SOLID 4" YELLOW ON LEFT SIDE
- SOLID 4" WHITE ON RIGHT SIDE

② CHANNELIZING - SOLID 8" WHITE WET REFLECTIVE TAPE

③ LANE MARKING - SOLID 4" WHITE WET REFLECTIVE TAPE

④ CHEVRON MARKING - 24" WHITE IN GORE AREA WHEN SPECIFIED IN THE CONTRACT *

⑤ DOTTED EDGE EXTENSION MARKING - 4" WHITE (3' LINE, 9' GAP). SEE NOTE 3.

NOTES:

1. ARROWS SHOWN ON THIS MARKING PLAN DESIGNATE TRAFFIC FLOW, AND SHALL NOT BE TAKEN AS PROPOSED PAVEMENT MARKINGS.

2. PLACE WHITE EDGE OF TAPE 6" LEFT FROM JOINT.

3. 3' LINE 9' GAP, EXCEPT RETRACE THE EXISTING LINE-GAP PATTERN WHERE EXISTING MARKINGS ARE IN PLACE.

4. RETRACE EXISTING DIAGONAL MARKINGS.

* REFER TO DESIGN NOTES.

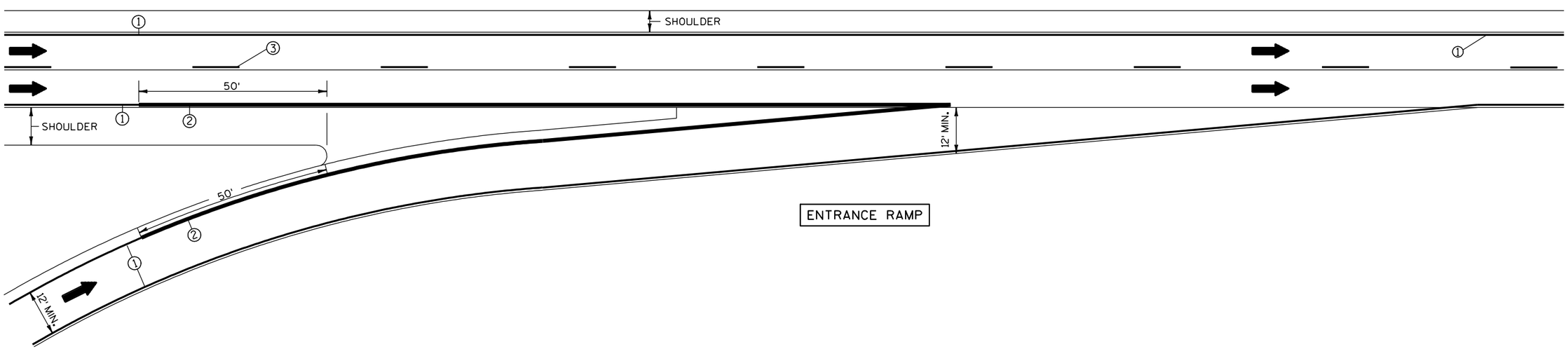

6

6

S.D.D. 15 C 31-1a

S.D.D. 15 C 31-1a

PAVEMENT MARKING
(RAMPS AND GORES)

STATE OF WISCONSIN
DEPARTMENT OF TRANSPORTATION

NOTES:

1. AHEAD ARROWS SHOWN ON THIS MARKING PLAN DESIGNATE TRAFFIC FLOW, AND SHALL NOT BE TAKEN AS PROPOSED PAVEMENT MARKINGS.
2. PLACE WHITE EDGE OF TAPE 6" LEFT FROM JOINT.
3. RETRACE EXISTING DIAGONAL MARKINGS.

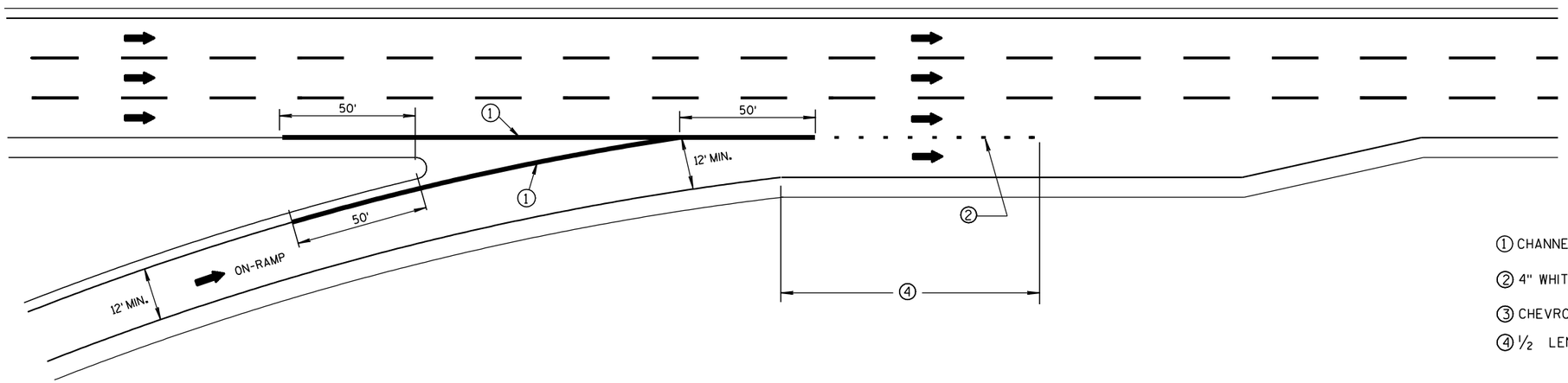

1 CHANNELIZING - SOLID 8" WHITE WET REFLECTIVE TAPE IN GORE AREA.

2 4" WHITE (3' LINE, 9' GAP).

3 CHEVRON MARKING - 24" WHITE WHEN SPECIFIED IN THE CONTRACT.

4 ½ LENGTH OF FULL WIDTH ACCELERATION LANE.

SERVICE INTERCHANGE PAVEMENT MARKING FOR PARALLEL ENTRANCE-RAMP

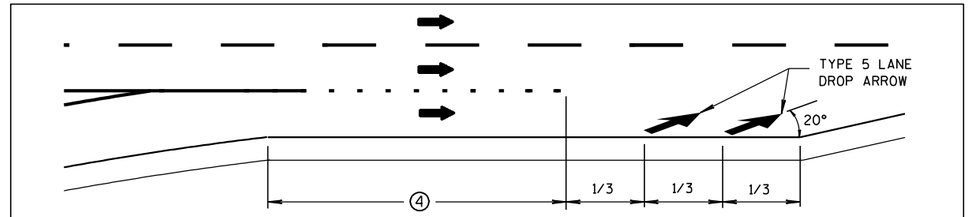

ARROWS AT 1/3 POINTS

WHEN SPECIFIED IN THE CONTRACT

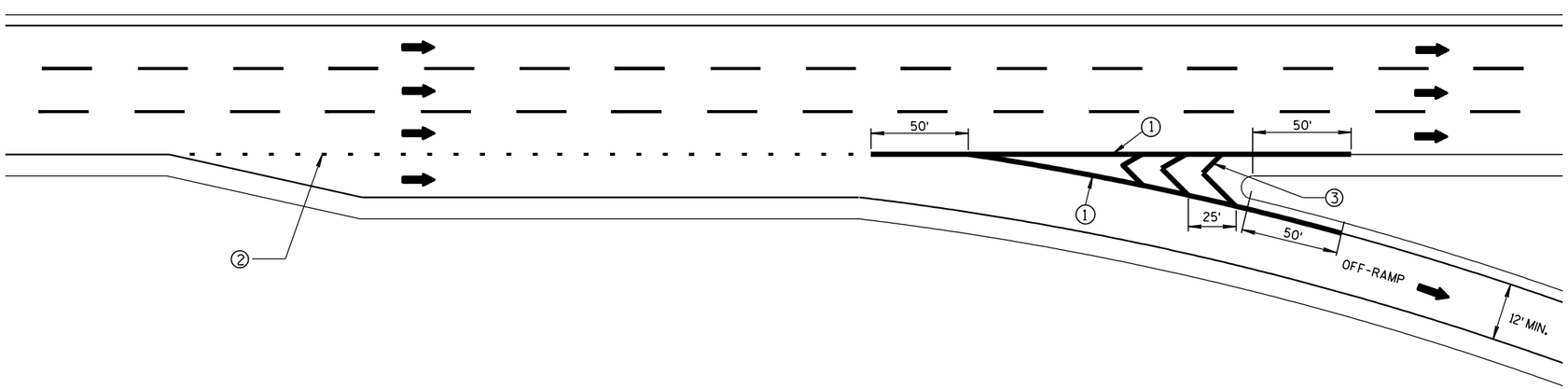

SERVICE INTERCHANGE PAVEMENT MARKING FOR PARALLEL EXIT-RAMP

PAVEMENT MARKING FOR PARALLEL ON-RAMP AND PARALLEL OFF-RAMP

STATE OF WISCONSIN
DEPARTMENT OF TRANSPORTATION

APPROVED

6/23/2011 — DATE

/S/ Thomas N. Notbohm — STATE TRAFFIC ENGINE — SIGN

FHWA

LEGEND

- POST WITH ATTACHED SIGN
- POST WITH ATTACHED SIGN IN DRUM
- DRUM WITH WARNING LIGHT (TYPE C)
- DRUM
- ARROW BOARD
- 8' TYPE III BARRICADE
- REMOVING PAVEMENT MARKING
- DIRECTION OF TRAFFIC

GENERAL NOTES :

THE EXACT NUMBER, LOCATION, AND SPACING OF ALL SIGNS AND DEVICES SHALL BE ADJUSTED TO FIT FIELD CONDITIONS AS APPROVED BY THE ENGINEER.

THE SPACING BETWEEN SIGNS SHOULD BE ADJUSTED TO NOT CONFLICT WITH AND TO PROVIDE A MINIMUM OF 200 FEET, (500 FEET DESIREABLE) DISTANCE TO EXISTING SIGNS.

THIS LANE CLOSURE IS TYPICAL FOR CLOSING RIGHT LANE - REVERSE FOR CLOSING LEFT LANE.

ALL SIGNS ARE 48"x48" UNLESS OTHERWISE NOTED.

"WO" IS THE SAME AS "W" EXCEPT THE BACKGROUND IS ORANGE.

ANY SIGNS TEMPORARY OR EXISTING, WHICH CONFLICT WITH TRAFFIC CONTROL "IN USE" SHALL BE REMOVED OR COVERED AS NEEDED AND AS APPROVED BY THE ENGINEER. NO WARNING LIGHTS SHALL BE WORKING ON "COVERED" OR "DOWNED" SIGNS.

(1) CONSIDER GEOMETRICS WHEN LOCATING SIGNS AND ARROW BOARD SO THE DRIVER HAS A CLEAR VIEW OF THE ARROW BOARD AND LANE CLOSURE DRUMS FOR A MINIMUM 1500 FEET IN FRONT OF DRUMS.

FOR A LANE CLOSURE THAT IS IN PLACE LESS THAN 7 CONTINUOUS DAYS AND NIGHTS, THE ADVANCED WARNING SIGNS MAY BE MOUNTED ON PORTABLE SUPPORTS.

GENERAL NOTES CONTINUED:

REMOVE PAVEMENT MARKINGS IF LANE CLOSURE IS TO BE IN PLACE FOR LONGER THAN 7 CONTINUOUS DAYS AND NIGHTS.

WARNING LIGHTS ARE NOT REQUIRED IF THE LANE CLOSURE IS A DAYTIME ONLY OPERATION.

IF THE HORIZONTAL ALIGNMENT IS SUCH THAT A CURVE MAY REQUIRE ADDITIONAL DELINEATION, THE DEVICE SPACING MAY BE DECREASED TO 50 FEET.

IF LANE CLOSURE IS MORE THAN 1 MILE, PLACE A TYPE III BARRICADE APPROXIMATELY EVERY 1/4 MILE ACROSS THE CLOSED LANE TO HELP ENFORCE THE DRUM LINE.

ADJUSTMENTS IN BUFFER SPACE NEED TO BE INCORPORATED WHEN THE LANE CLOSURE OCCURS NEAR AN INTERCHANGE EXIT OR ENTRANCE RAMP. THE LANE CLOSURE MUST MUST TAKE PLACE FAR ENOUGH IN ADVANCE OF AN EXIT OR ENTRANCE RAMP TO STILL ALLOW FOR ADEQUATE BUFFER SPACE. THE MINIMUM LENGTH OF THE BUFFER SPACE BEFORE AN EXIT RAMP SHOULD BE 1/2 THE LENGTH OF THE TRANSITION AREA. THE ENTRANCE RAMP SHOULD BE FOLLOWED BY THE ORIGINAL BUFFER SPACE LENGTH OF 800 FEET DESIRABLE PRIOR TO ANOTHER TRAFFIC CONTROL CHANGE SUCH AS A CROSSOVER MANEUVER.

* THE LEFT REVERSE CURVE SIGN (WO1-4L) IS ONLY REQUIRED WHEN THIS DETAIL IS USED IN COMBINATION WITH "SINGLE LANE CROSSOVER" DETAIL.

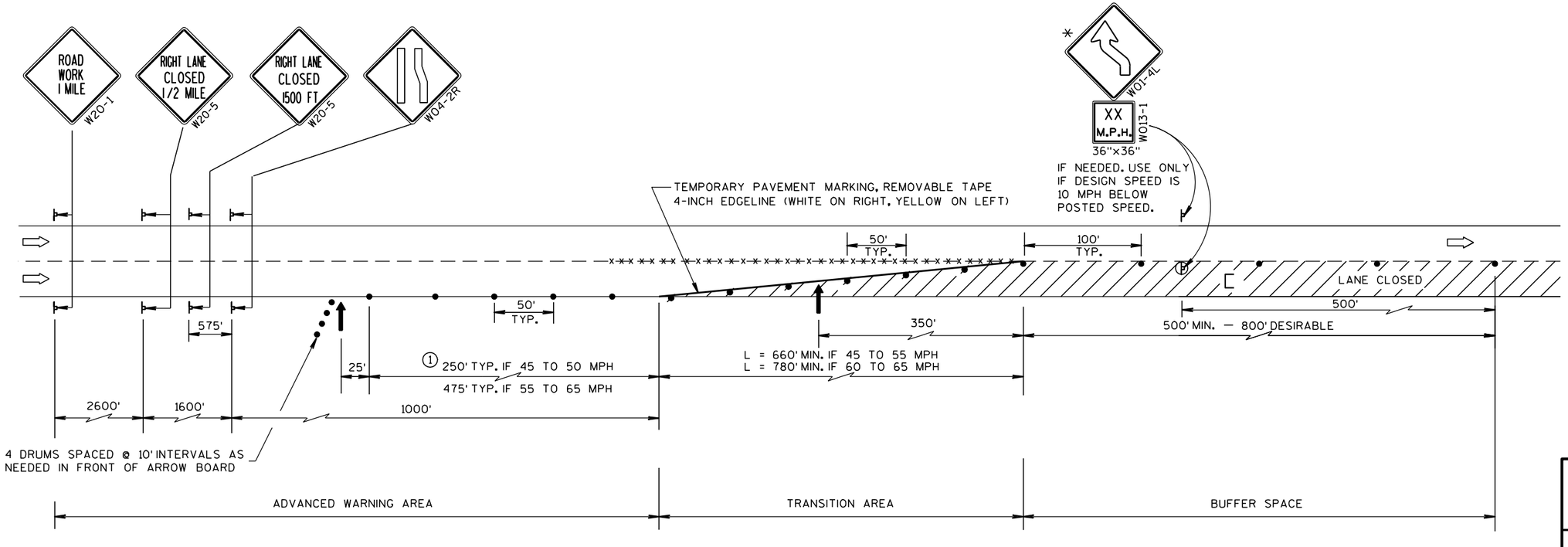

TRAFFIC CONTROL, LANE CLOSURE, SPEEDS GREATER THAN 40 M.P.H.

STATE OF WISCONSIN
DEPARTMENT OF TRANSPORTATION

APPROVED
8-7-95 — DATE
/S/ Chester J. [illegible] — DIRECTOR, OFFICE O[illegible]
FHWA

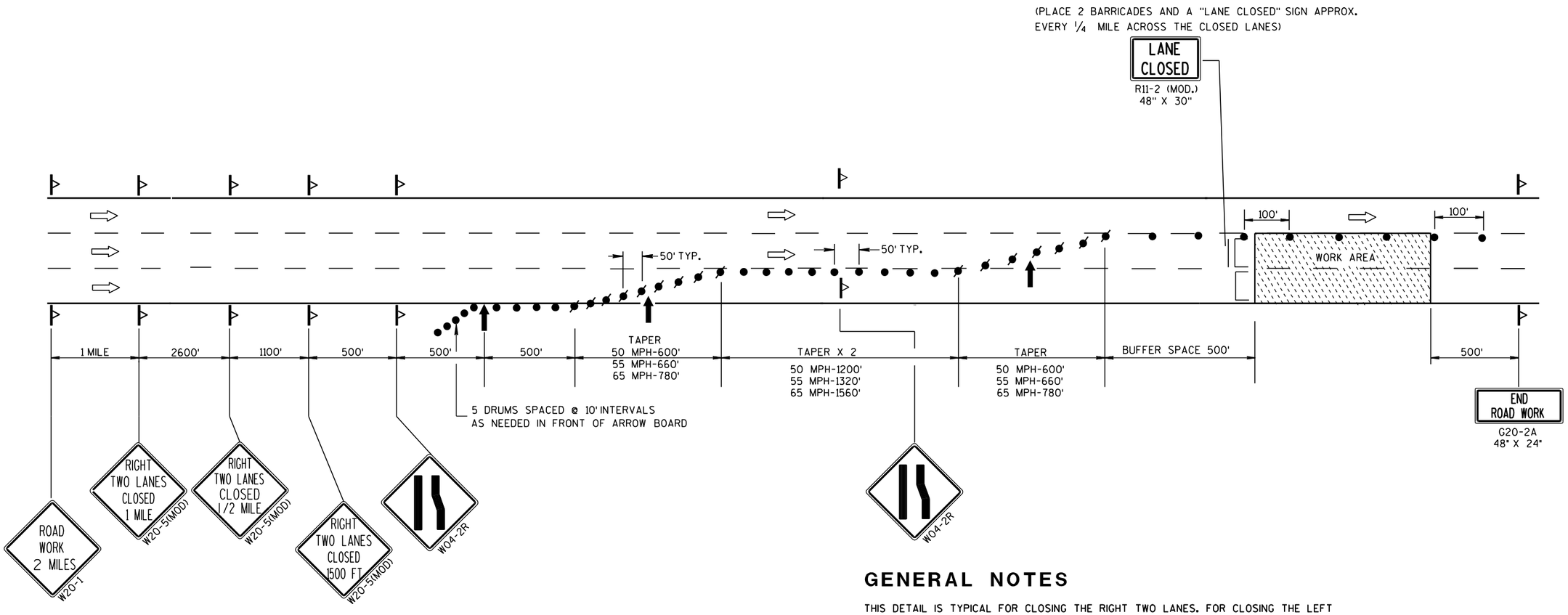

LEGEND

- DRUM WITH/WITHOUT WARNING LIGHT, TYPE C (STEADY BURN)
- SIGN ON POST OR PORTABLE SUPPORT
- FLASHING ARROW BOARD
- TYPE III BARRICADE (8' EQUIVALENT) WITH/WITHOUT SIGN
- DIRECTION OF TRAFFIC FLOW

GENERAL NOTES

THIS DETAIL IS TYPICAL FOR CLOSING THE RIGHT TWO LANES. FOR CLOSING THE LEFT TWO LANES, REVERSE THE TRAFFIC CONTROL.

THE EXACT NUMBER, LOCATION, AND SPACING OF ALL SIGNS AND DEVICES SHALL BE ADJUSTED TO FIT FIELD CONDITIONS AS APPROVED BY THE ENGINEER.

THE SPACING BETWEEN TRAFFIC CONTROL SIGNS SHOULD BE ADJUSTED TO NOT CONFLICT WITH AND SHOULD PROVIDE A MINIMUM OF 200 FEET (500 FEET DESIRABLE) CLEARANCE TO EXISTING SIGNS THAT WILL REMAIN IN PLACE.

ALL SIGNS ARE 48" X 48" UNLESS OTHERWISE NOTED.

"WO" SIGNS ARE THE SAME AS "W" SIGNS EXCEPT THE BACKGROUND IS ORANGE.

ANY SIGNS TEMPORARY OR EXISTING, WHICH CONFLICT WITH TRAFFIC CONTROL "IN USE" SHALL BE REMOVED OR COVERED AS NEEDED AND AS APPROVED BY THE ENGINEER.

W20-1 AND G20-2A SIGNS ARE NOT REQUIRED IF THE LANE CLOSURE IS WITHIN A LARGER WORK ZONE WHERE THESE SIGNS ARE ALREADY PRESENT.

CONSIDER GEOMETRICS WHEN LOCATING SIGNS AND ARROWBOARDS SO THE APPROACHING DRIVER HAS A CLEAR VIEW OF THE ARROWBOARDS AND LANE CLOSURE DRUMS FOR A MINIMUM 1500 FEET IN FRONT OF DRUMS.

WHEN A RAMP OR SIDE ROAD INTERSECTS THE FACILITY ON WHICH THE WORK IS BEING PERFORMED, ADDITIONAL TRAFFIC CONTROLS SHALL BE PROVIDED AS SPECIFIED IN THE PLANS AND/OR SPECIAL PROVISIONS OR AS APPROVED BY THE ENGINEER.

BARRICADES IN A CLOSED LANE THAT MUST BE MOVED FOR A WORK OPERATION SHALL BE IMMEDIATELY RE-ESTABLISHED UPON COMPLETION OF THE OPERATION OR, FOR CONTINUING OPERATIONS, AT THE END OF EACH WORKING DAY.

CHANNELIZING DEVICES PLACED ADJACENT TO WORK AREA SHALL BE PULLED BACK FROM THE TRAVEL LANE WHEN WORK IS NOT IN PROGRESS.

WARNING LIGHTS ARE NOT REQUIRED IF THE LANE CLOSURE IS A DAYTIME ONLY OPERATION.

TRAFFIC CONTROL, TWO LANE CLOSURE ON FREEWAY OR EXPRESSWAY, SHORT-TERM (LESS THAN 24 HOURS)

STATE OF WISCONSIN
DEPARTMENT OF TRANSPORTATION

APPROVED
5/23/2000 — DATE
/S/ Chester J. C---- — CHIEF SIGNS AND MAR 161 INEER
FHWA

6
S.D.D. 15 D 14-1

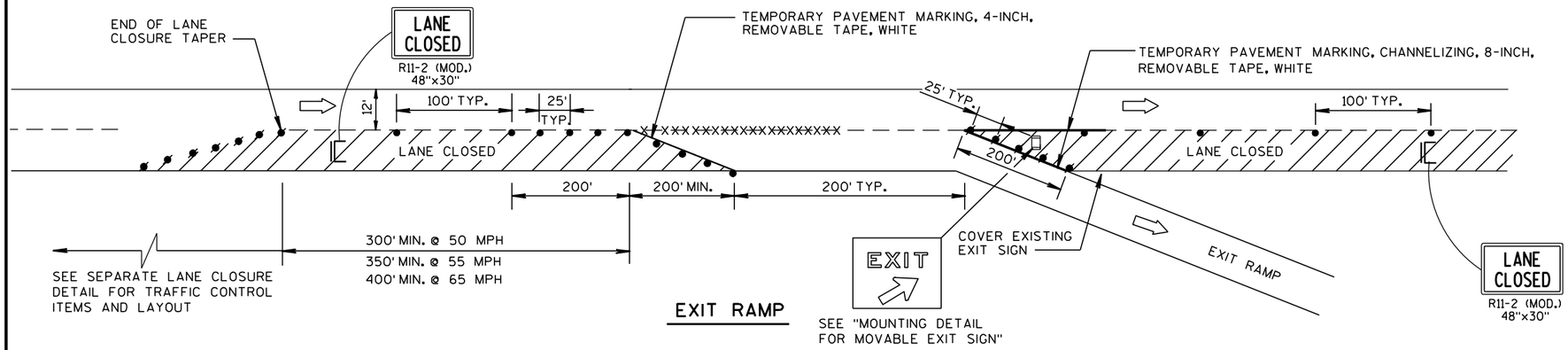

EXIT RAMP

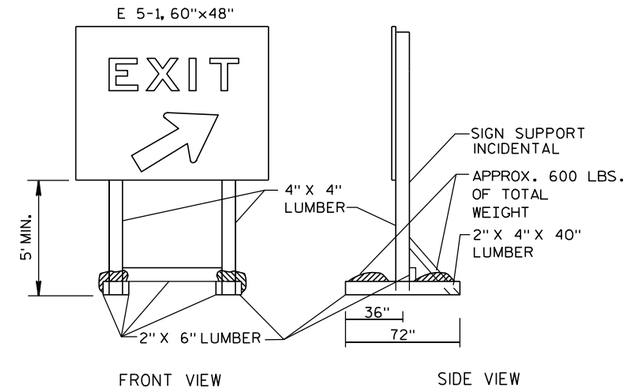

NOTE: ALL LUMBER DIMENSIONS ARE NOMINAL

MOUNTING DETAIL FOR MOVABLE EXIT SIGN

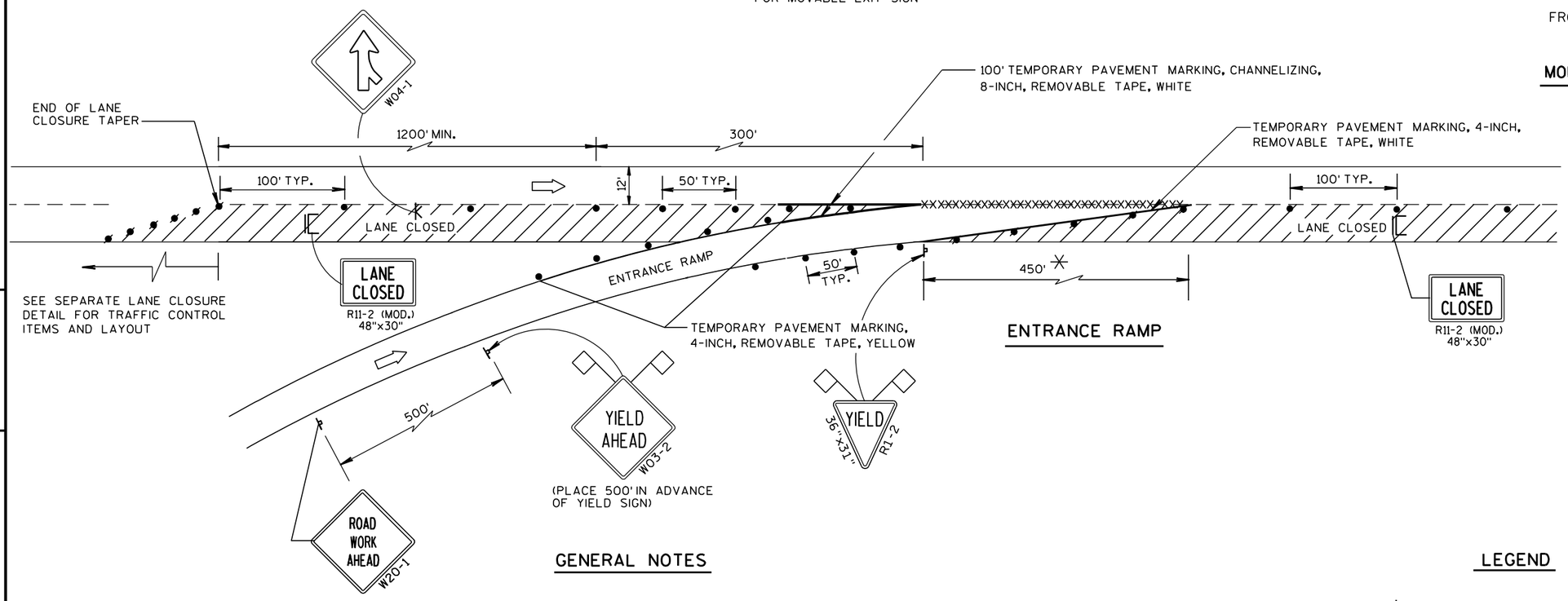

ENTRANCE RAMP

GENERAL NOTES

THE INSTALLATIONS SHOWN ON THIS SHEET ARE TYPICAL EXAMPLES AND ARE NOT INTENDED TO REPRESENT ANY PARTICULAR RAMP. AT SPECIFIC FIELD LOCATIONS, SIMILAR INSTALLATIONS SHALL BE USED AND ADJUSTED TO THE GEOMETRICS OF THE RAMP AS COORDINATED WITH THE ENGINEER.

THE EXACT NUMBER, LOCATION, AND SPACING OF ALL SIGNS AND DEVICES SHALL BE ADJUSTED TO FIT FIELD CONDITIONS AS APPROVED BY THE ENGINEER.

THE SPACING BETWEEN TRAFFIC CONTROL SIGNS SHOULD BE ADJUSTED TO NOT CONFLICT WITH AND SHOULD PROVIDE A MINIMUM OF 200 FEET, (500 FEET DESIRABLE) CLEARANCE TO EXISTING SIGNS THAT WILL REMAIN IN PLACE.

ALL SIGNS ARE 48"x48" UNLESS OTHERWISE NOTED.

"WO" IS THE SAME AS "W" EXCEPT THE BACKGROUND IS ORANGE.

SEE SEPARATE LANE CLOSURE DETAIL FOR TYPICAL SPACING OF TYPE III BARRICADES AND R11-2 (MOD.) "LANE CLOSED" SIGNS.

YIELD SIGN AND WARNING SIGNS ON ENTRANCE RAMP ARE ALSO APPROPRIATE FOR CLOSURE OF THE MAINLINE LEFT LANE. OMIT THE YIELD SIGN IF MORE THAN ONE LANE REMAINS OPEN ON THE MAINLINE AND THE RAMP TAPER IS AT LEAST AS LONG AS THE NORMAL ENTRANCE RAMP TAPER AT THE SITE.

SIGNS THAT WILL BE IN PLACE LESS THAN 7 CONTINUOUS DAYS AND NIGHTS, OR THAT WILL BE PLACED IN A CLOSED LANE, MAY BE MOUNTED ON PORTABLE SUPPORTS.

IF INDICATED IN MISCELLANEOUS QUANTITIES, SUBSTITUTE FLEXIBLE TUBULAR MARKERS FOR DRUMS IN THE GORE BETWEEN THE ENTRANCE RAMP AND MAINLINE TRAFFIC.

ANY SIGNS TEMPORARY OR EXISTING, WHICH CONFLICT WITH TRAFFIC CONTROL "IN USE" SHALL BE REMOVED OR COVERED AS NEEDED AND AS APPROVED BY THE ENGINEER.

REMOVE PAVEMENT MARKINGS AND PLACE TEMPORARY PAVEMENT MARKING, REMOVABLE TAPE IF LANE CLOSURE IS TO BE IN PLACE FOR 7 OR MORE CONTINUOUS DAYS AND NIGHTS.

WARNING LIGHTS ARE NOT REQUIRED IF THE LANE CLOSURE IS A DAYTIME ONLY OPERATION.

✳ LENGTH OF OPENING MAY BE REDUCED TO 150 FEET DURING STAGING OF WORK IN IMMEDIATE AREA OF RAMP TAPER.

LEGEND

- POST MOUNTED SIGN
- SIGN ON PORTABLE SUPPORT
- TRAFFIC CONTROL, DRUM
- TRAFFIC CONTROL, DRUM WITH WARNING LIGHT, TYPE C (STEADY-BURN)
- REMOVING PAVEMENT MARKING (SEE GENERAL NOTES)
- TYPE III BARRICADE (8' EQUIVALENT) WITH SIGN
- FLAGS, 16"x16" MIN., ORANGE
- DIRECTION OF TRAFFIC FLOW

TRAFFIC CONTROL, EXIT AND ENTRANCE RAMP WITHIN LANE CLOSURE

STATE OF WISCONSIN
DEPARTMENT OF TRANSPORTATION

APPROVED
5/24/2000 — DATE
/S/ Chester J. [illegible] — CHIEF SIGNS AND MAR[illegible]INEER
FHWA

6

S.D.D. 15 D 15-1

SYMBOLS

IC/C	TYPE III BARRICADE (8' EQUIVALENT) WITH/WITHOUT SIGN
•	DRUM
	POST MOUNTED SIGN
(A)	WARNING LIGHT, TYPE A (FLASHING)
⇨	DIRECTION OF TRAFFIC

GENERAL NOTES

THIS RAMP CLOSURE DETAIL IS TYPICAL FOR CLOSING A RIGHT SIDE EXIT RAMP. FOR A LEFT SIDE EXIT RAMP, REVERSE THE TRAFFIC CONTROL.

THE EXACT NUMBER, LOCATION, AND SPACING OF ALL SIGNS AND DEVICES SHALL BE ADJUSTED TO FIT FIELD CONDITIONS AS APPROVED BY THE ENGINEER.

THE SPACING BETWEEN TRAFFIC CONTROL SIGNS SHOULD BE ADJUSTED TO NOT CONFLICT WITH AND SHOULD PROVIDE A MINIMUM OF 200 FEET (500 FEET DESIRABLE) CLEARANCE TO EXISTING SIGNS THAT WILL REMAIN IN PLACE.

ALL SIGNS ARE 48" X 48" UNLESS OTHERWISE NOTED.

SIGNS THAT WILL BE IN PLACE LESS THAN 7 CONTINUOUS DAYS AND NIGHTS MAY BE MOUNTED ON PORTABLE SUPPORTS.

ANY SIGNS TEMPORARY OR EXISTING, WHICH CONFLICT WITH TRAFFIC CONTROL "IN USE" SHALL BE REMOVED OR COVERED AS NEEDED AND AS APPROVED BY THE ENGINEER.

PLACE TEMPORARY PAVEMENT MARKING, REMOVABLE TAPE IF RAMP CLOSURE IS TO BE IN PLACE FOR 7 OR MORE CONTINUOUS DAYS AND NIGHTS.

WORK AREAS WITH A DROPOFF ALONG THE EDGE OF AN OPEN TRAVEL LANE SHALL BE LEVELED WITH TEMPORARY FILL WHEN THE CONTRACTOR IS NOT WORKING ADJACENT TO THE TRAVEL LANE. DRUMS SHALL BE PLACED ENTIRELY OUTSIDE THE TRAVEL LANE, ALLOWING THE FULL UNOBSTRUCTED LANE WIDTH, WHEN THE WORK IS NOT IN PROGRESS.

WHERE MEDIAN BARRIER IS IN PLACE, SIGNS SHOWN ON LEFT SIDE OF ROADWAY MAY BE OMITTED FOR RIGHT SIDE RAMP CLOSURES OF LESS THAN 12-HOUR DURATION.

*W20-1 AND G20-2A SIGNS ARE NOT REQUIRED IF THE RAMP CLOSURE IS WITHIN A LARGER WORK ZONE WHERE THESE SIGNS ARE ALREADY PRESENT.

**USE THE "RAMP WILL BE CLOSED" SIGN IF INDICATED IN MISCELLANEOUS QUANTITIES. PLACE 10 CALENDAR DAYS PRIOR TO CLOSURE OR AS DIRECTED BY THE ENGINEER. SEE WISCONSIN STANDARD SIGN PLATES FOR SIGN LAYOUT.

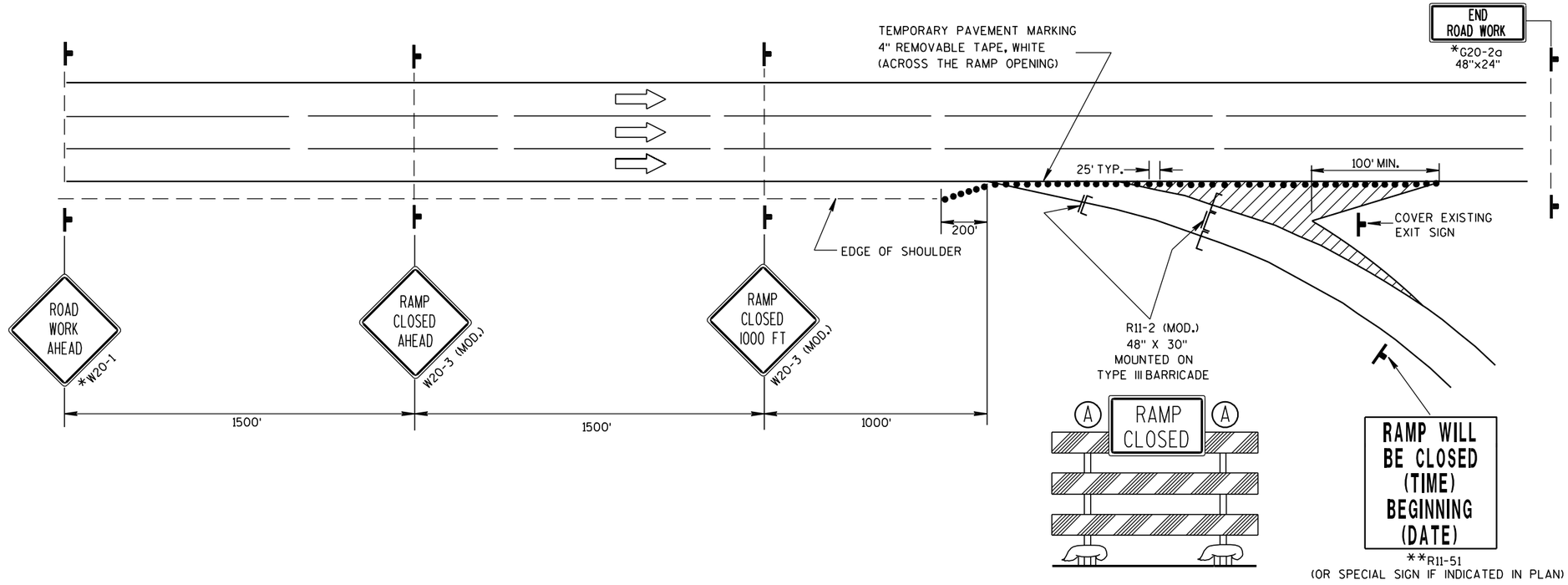

TRAFFIC CONTROL,
EXIT RAMP CLOSURE

STATE OF WISCONSIN
DEPARTMENT OF TRANSPORTATION

APPROVED
5/23/2000 — DATE
/S/ Chester J. [illegible] — CHIEF SIGNS AND MAR[illegible]INEER
FHWA

6

S.D.D. 15 D 16-1

SYMBOLS

- TRAFFIC CONTROL DRUM
- POST MOUNTED SIGN
- DIRECTION OF TRAFFIC FLOW
- ARROW BOARD IN CAUTION MODE

GENERAL NOTES

THIS DETAIL IS TYPICAL FOR CLOSING THE RIGHT SHOULDER. FOR CLOSING THE LEFT SHOULDER, REVERSE THE TRAFFIC CONTROL.

THIS DETAIL MAY BE USED FOR DIVIDED ROADWAYS WITH ANY NUMBER OF TRAVEL LANES.

THE EXACT NUMBER, LOCATION AND SPACING OF ALL SIGNS AND DEVICES SHALL BE ADJUSTED TO FIT FIELD CONDITIONS AS APPROVED BY THE ENGINEER.

ALL SIGNS ARE 48" X 48" UNLESS OTHERWISE NOTED.

SIGN LAYOUTS SHALL BE IN ACCORDANCE WITH THE FHWA'S MANUAL OF STANDARD HIGHWAY SIGNS OR THE WISCONSIN STANDARD SIGN PLATES.

SIGNS THAT WILL BE IN PLACE LESS THAN 7 CONTINUOUS DAYS AND NIGHTS MAY BE MOUNTED ON PORTABLE SUPPORTS.

ANY SIGNS TEMPORARY OR EXISTING, WHICH CONFLICT WITH TRAFFIC CONTROL "IN USE" SHALL BE REMOVED OR COVERED AS NEEDED AND AS APPROVED BY THE ENGINEER.

CHANNELIZING DEVICES PLACED ADJACENT TO THE WORK AREA SHALL BE PULLED BACK FROM THE TRAVEL LANE WHEN WORK IS NOT IN PROGRESS.

WHEN A RAMP INTERSECTS THE FACILITY ON WHICH THE WORK IS BEING PERFORMED, ADDITIONAL TRAFFIC CONTROLS SHALL BE PROVIDED AS SPECIFIED IN THE PLANS AND/OR THE SPECIAL PROVISIONS OR AS APPROVED BY THE ENGINEER.

*FOR SHORT DURATION SHOULDER WORK OF LESS THAN ONE HOUR, THE W21-5a SIGN MAY BE OMITTED.

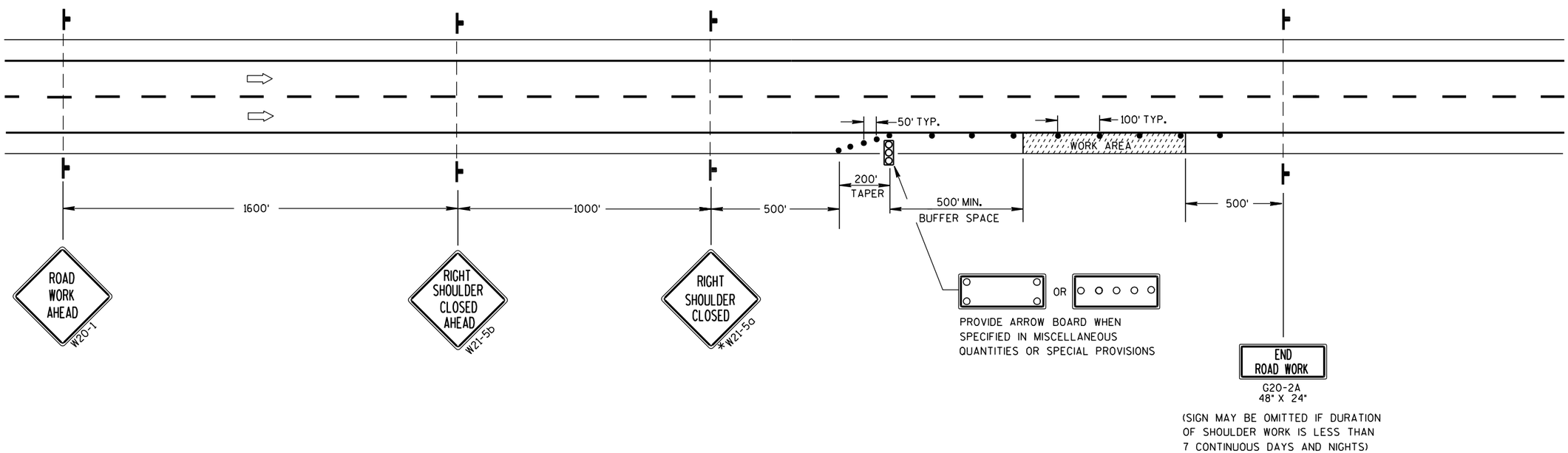

TRAFFIC CONTROL SHOULDER CLOSURE ON DIVIDED ROADWAY, SPEEDS GREATER THAN 40 MPH

STATE OF WISCONSIN
DEPARTMENT OF TRANSPORTATION

APPROVED

5/23/00 — DATE

/S/ Chester J Spaan — CHIEF SIGNS AND MAR INEER

FHWA

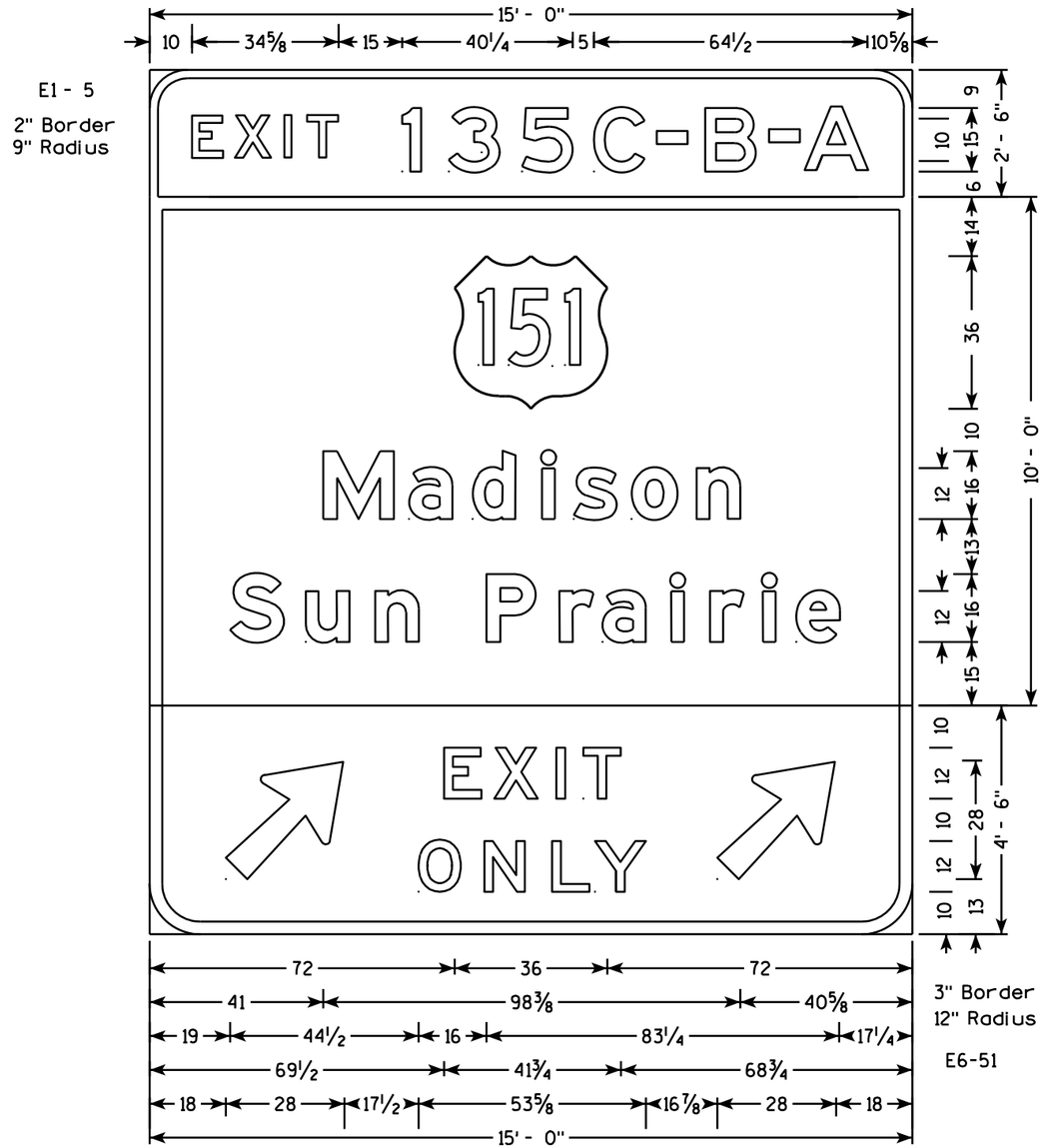

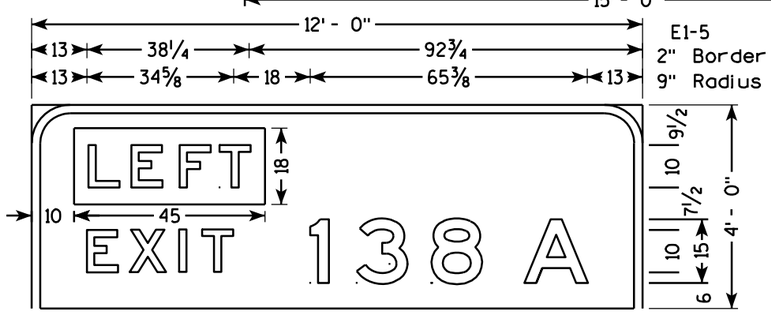

NOTES

1. All Signs are Type I - Type SH Reflective - reference WIS DOT Standard Specification for HIGHWAY and STRUCTURE CONSTRUCTION latest edition.
2. Color:
   Background - Green
   Message - White
3. Message Series - E Modified except all cap WORDS are Series E

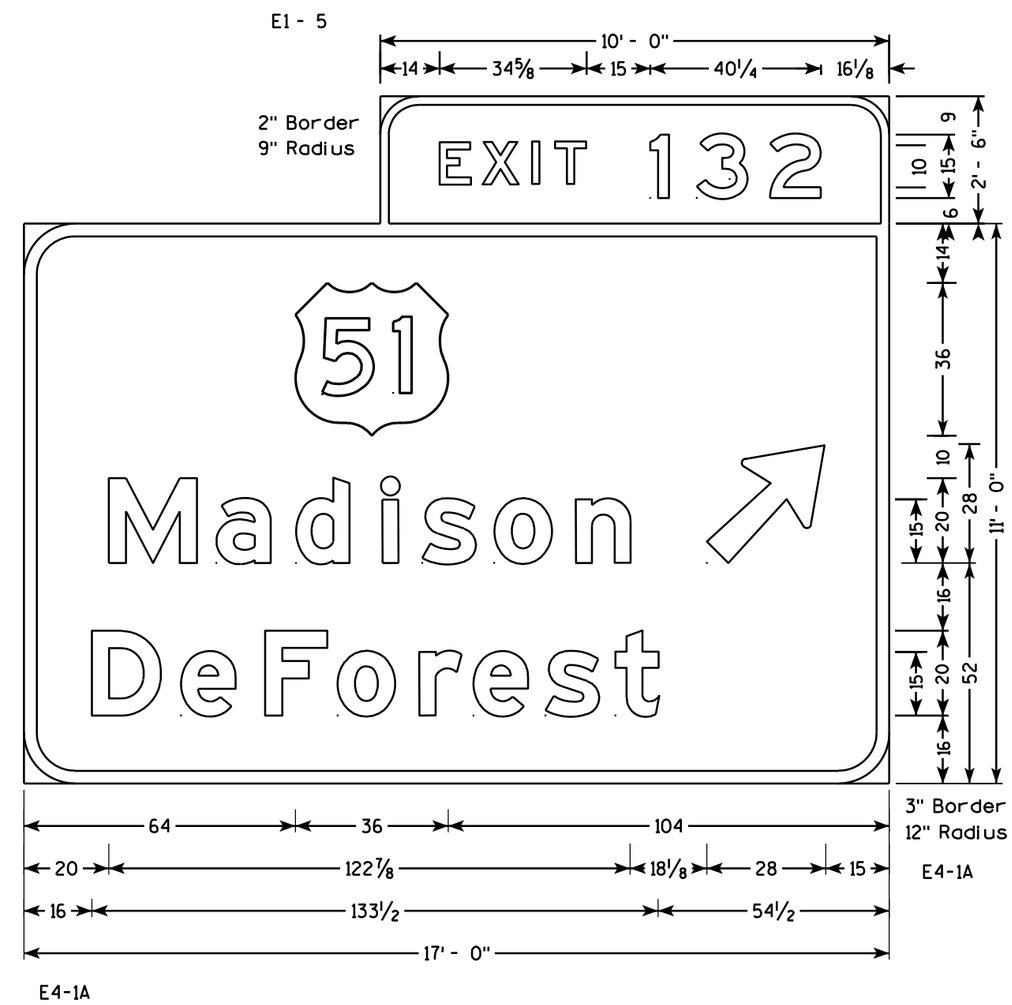

7

7

PROJECT NO: 1010-00-72	HWY: IH 39	COUNTY: DANE	PERMANENT SIGNING	SHEET NO: 165	E

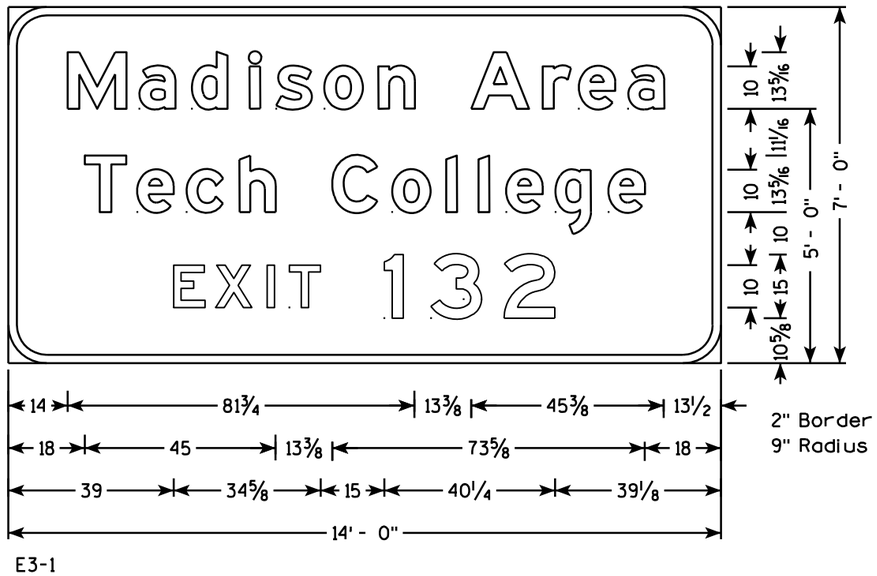

E3-1

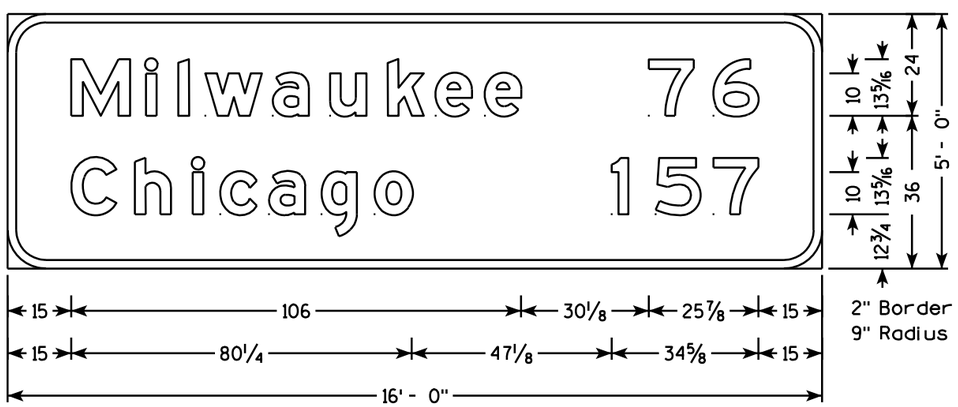

D2-2

NOTES

1. All Signs are Type I - Type SH Reflective - reference WIS DOT Standard Specification for HIGHWAY and STRUCTURE CONSTRUCTION latest edition.
2. Color:
   Background - Green
   Message - White
3. Message Series - E Modified except all cap WORDS are Series E

E1 - 5

2" Border
9" Radius

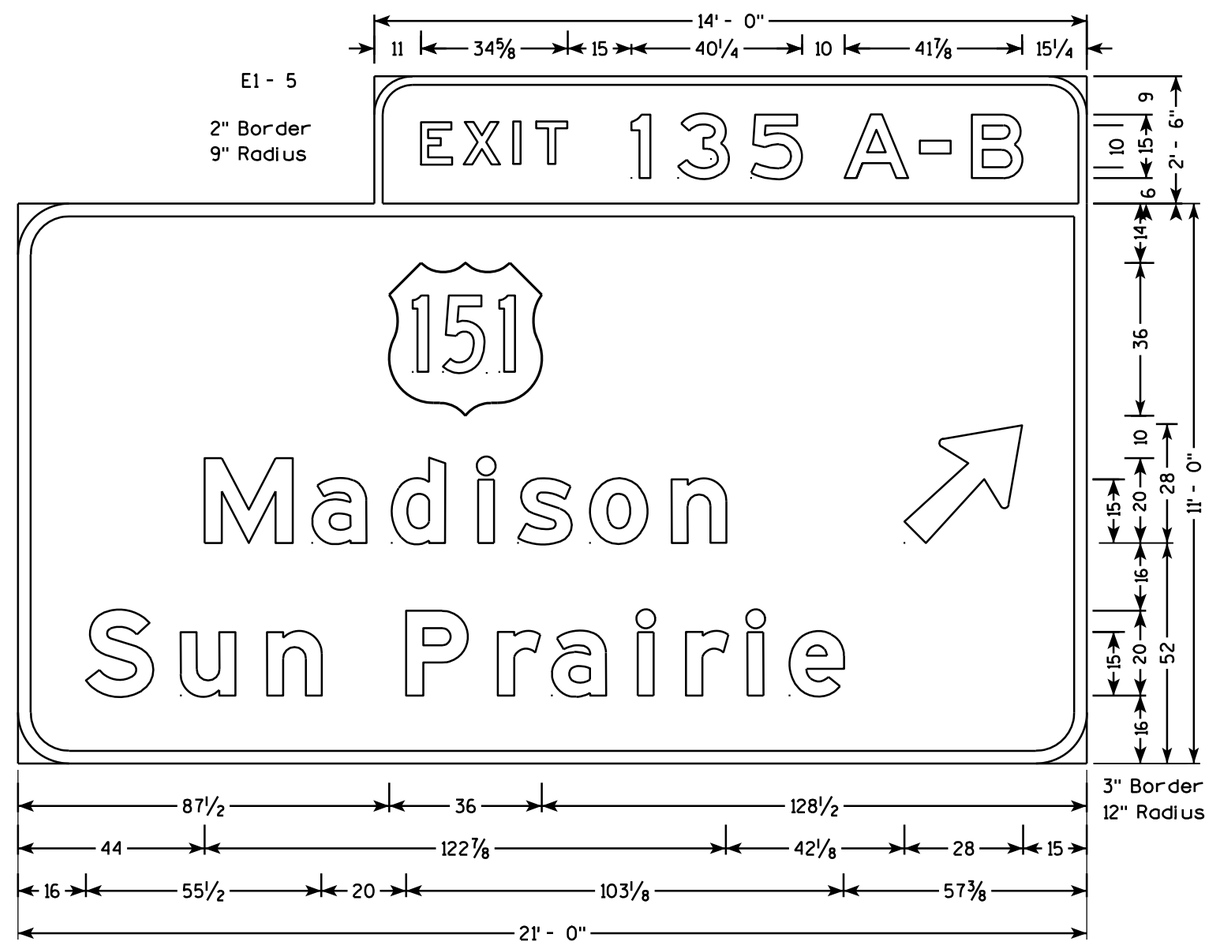

E4-1A

7

7

PROJECT NO: 1010-00-72	HWY: IH 39	COUNTY: DANE	PERMANENT SIGNING	SHEET NO: 166	E

NOTES

1. All Signs are Type I - Type SH Reflective - reference WIS DOT Standard Specification for HIGHWAY and STRUCTURE CONSTRUCTION latest edition.
2. Color:
   Background - Green
   Message - White
3. Message Series - E Modified except all cap WORDS are Series E

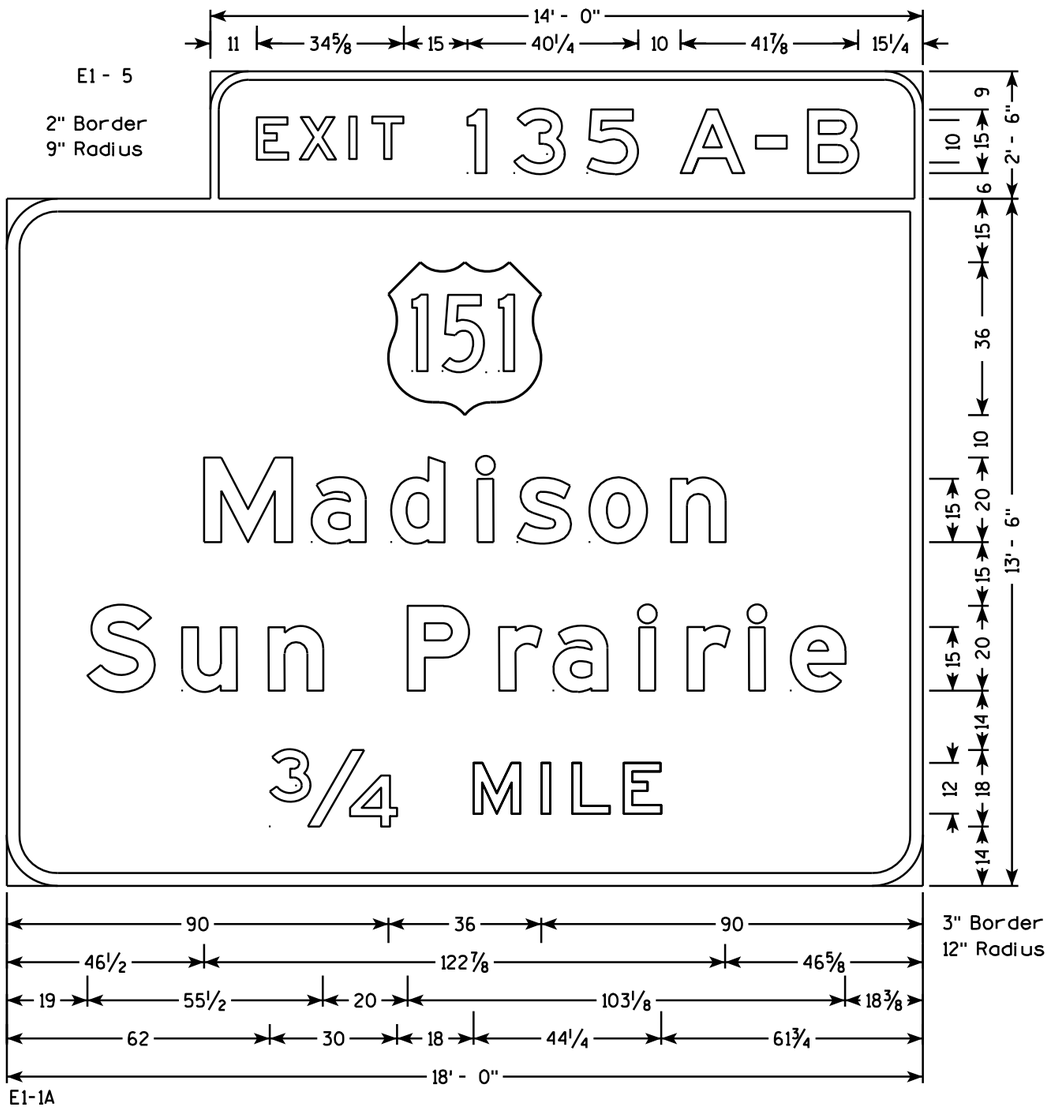

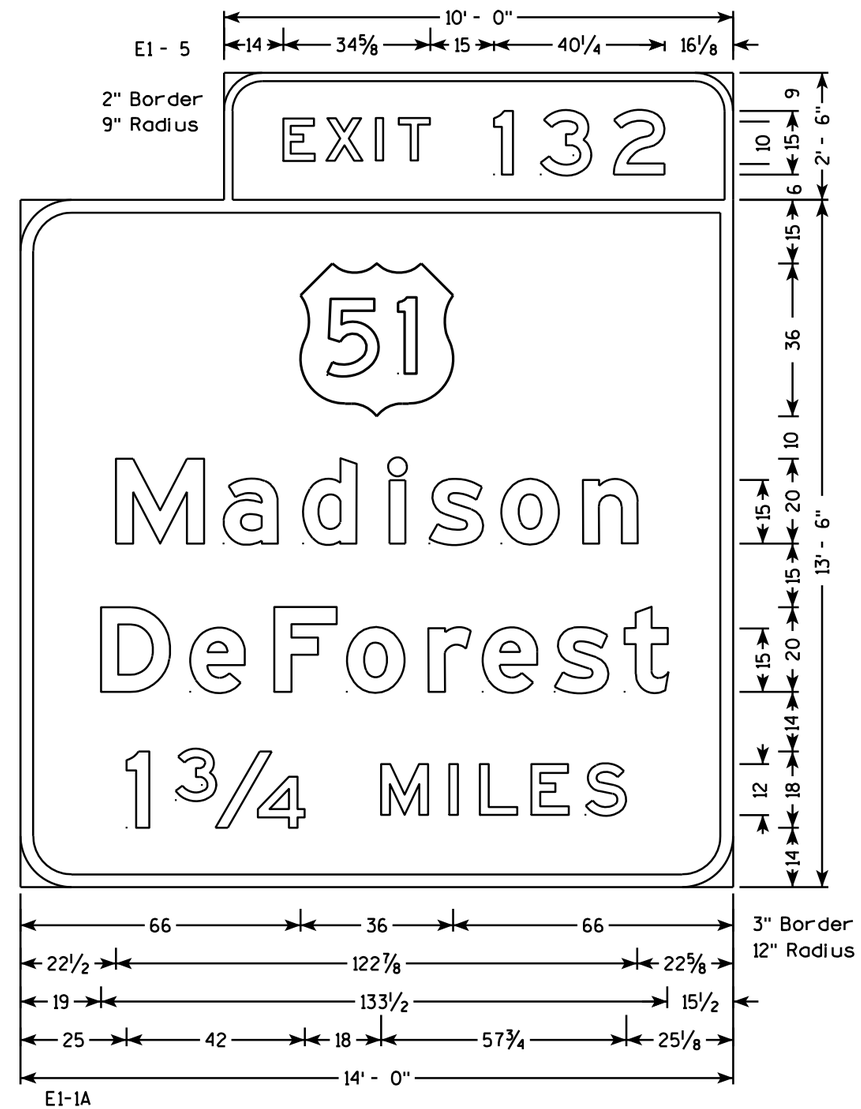

7

7

PROJECT NO: 1010-00-72	HWY: IH 39	COUNTY: DANE	PERMANENT SIGNING	SHEET NO: 167	E

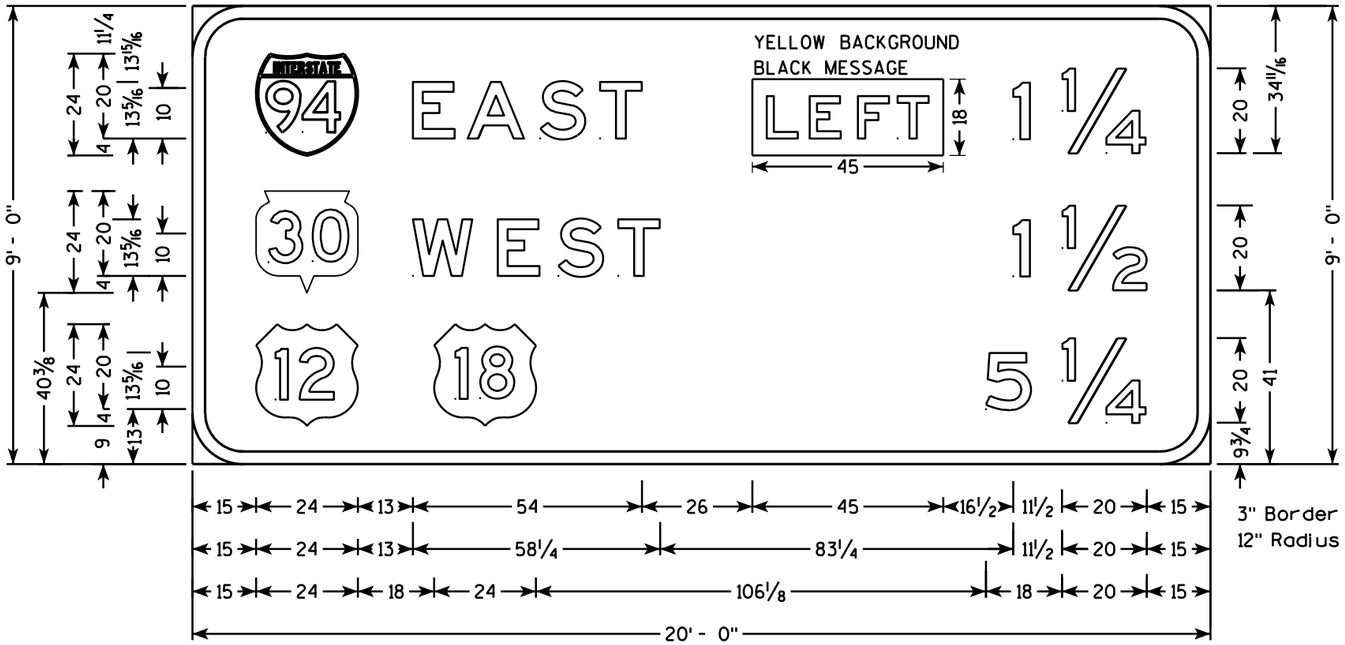

E8-1

NOTES

1. All Signs are Type I - Type SH Reflective - reference WIS DOT Standard Specification for HIGHWAY and STRUCTURE CONSTRUCTION latest edition.
2. Color:
   Background - Green except as Shown
   Message - White except as Shown
3. Message Series - E Modified except all cap WORDS are Series E

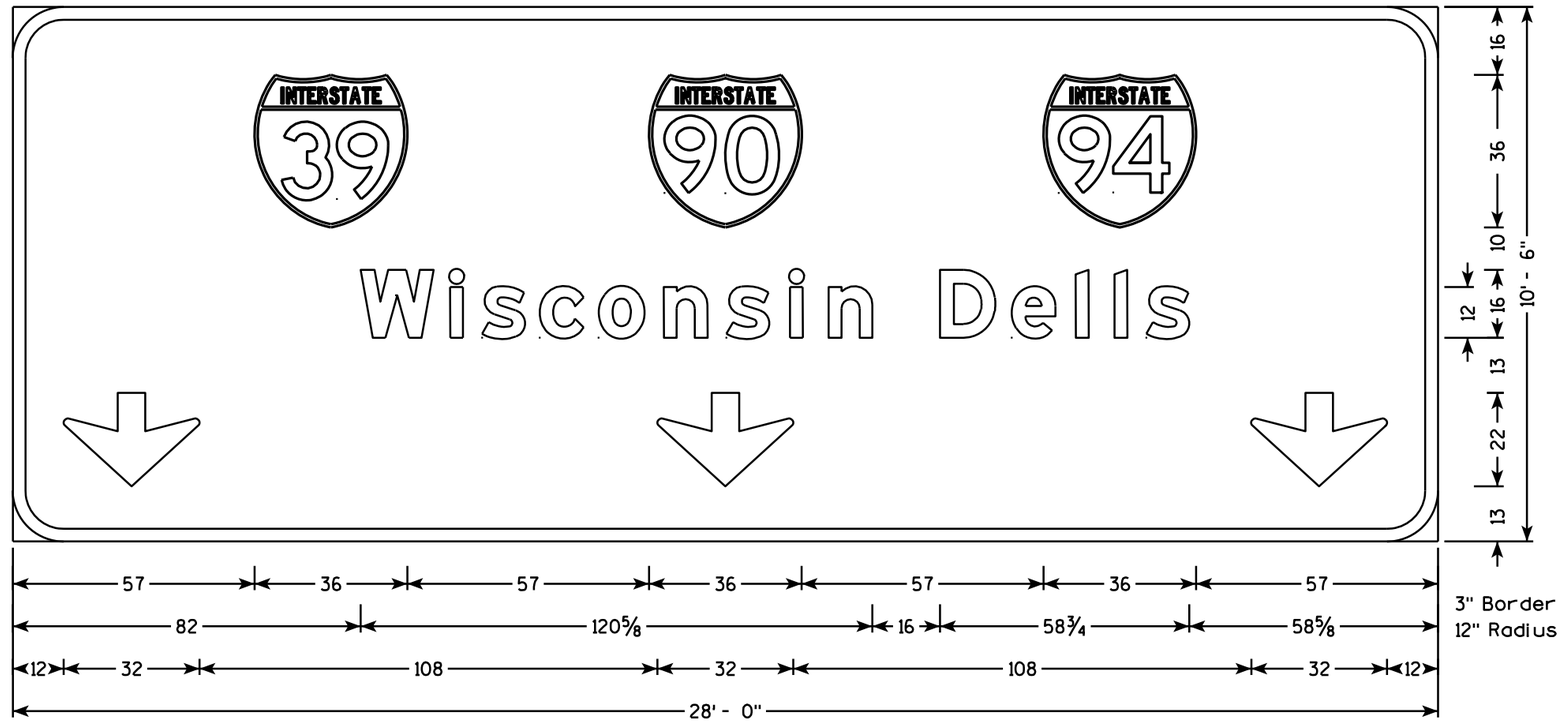

E6-51

7

7

PROJECT NO: 1010-00-72	HWY: IH 39	COUNTY: DANE	PERMANENT SIGNING	SHEET NO: 168	E

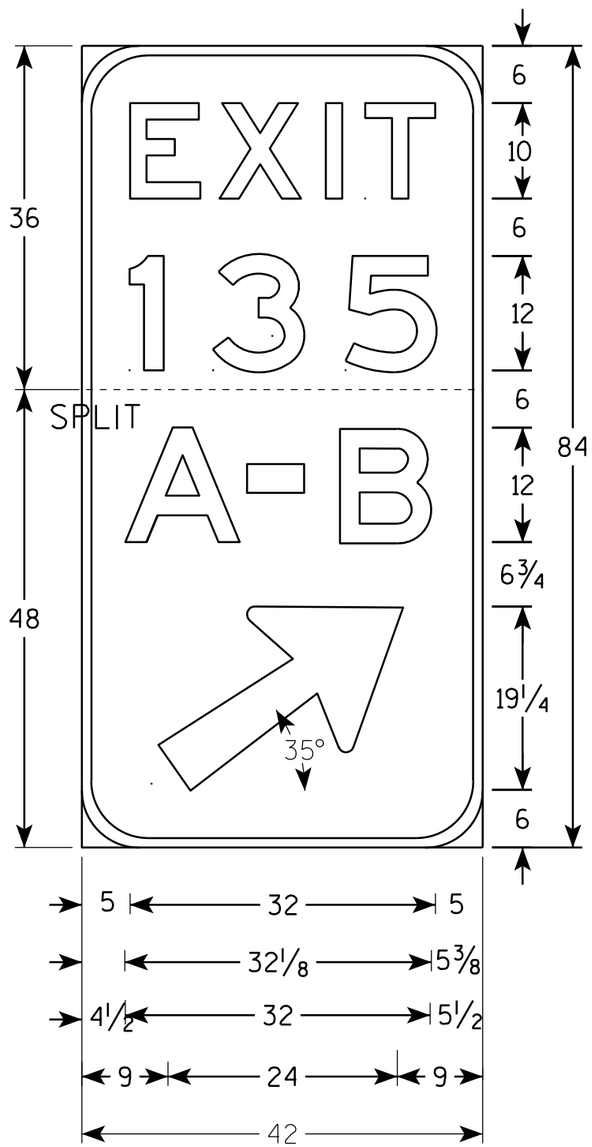

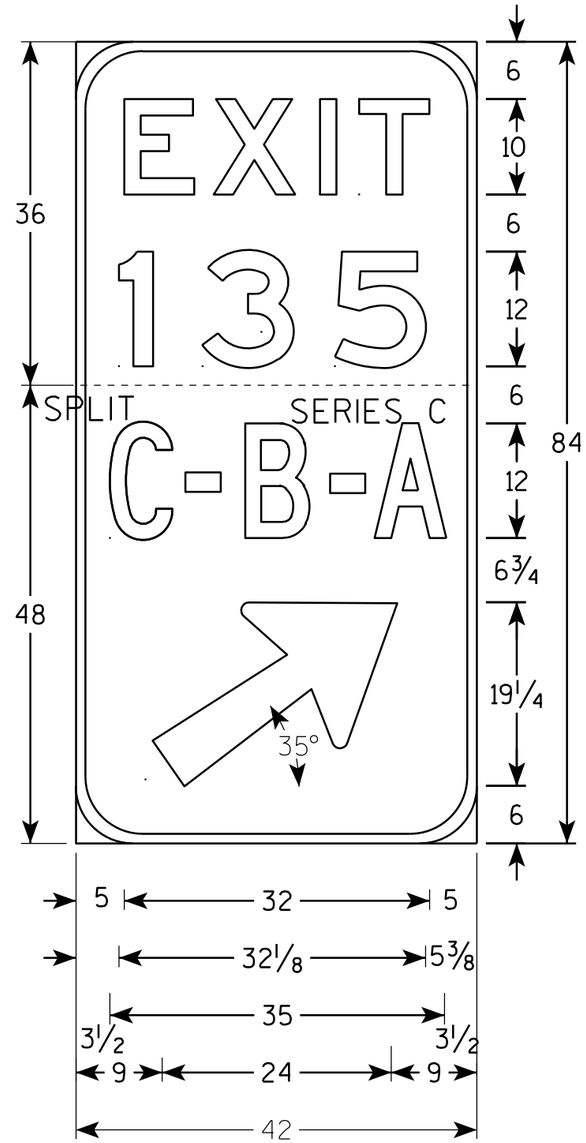

NOTES

1. All Signs Type II - Type H Reflective - reference WIS DOT Standard Specification for HIGHWAY and STRUCTURE CONSTRUCTION latest edition.
2. Color:
   Background - GREEN
   Message - WHITE
3. Message Series - E except as Shown

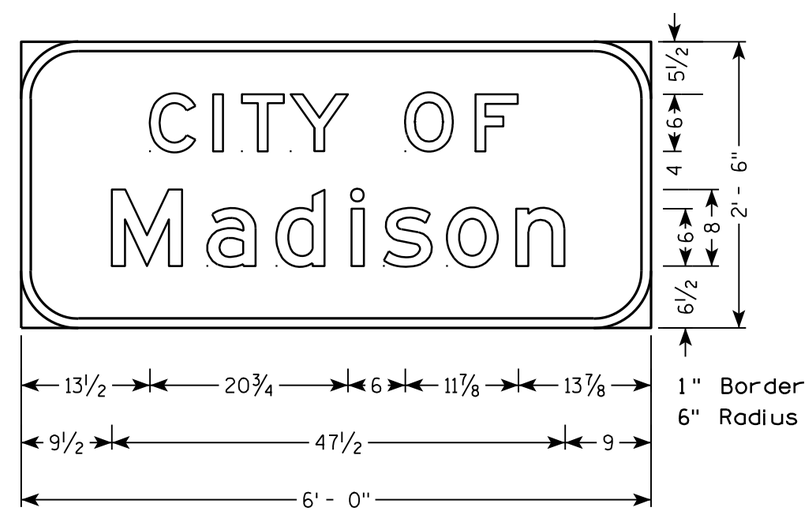

I2-3A

7

7

PROJECT NO: 1010-00-72	HWY: IH 39	COUNTY: DANE	PERMANENT SIGNING	SHEET NO: 169	E

TYPICAL ASSEMBLIES

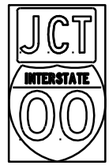

J1-1

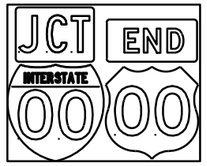

J1-2

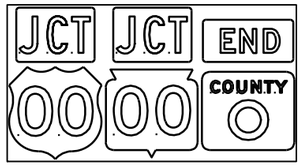

J1-3

JV

J2-1

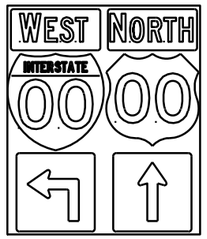

J2-2

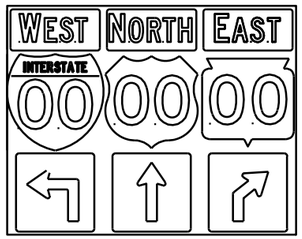

J2-3

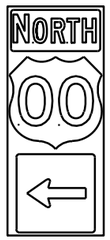

J3-1

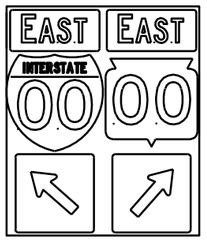

J3-2

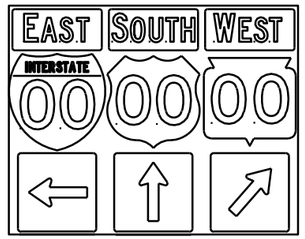

J3-3

J4-1

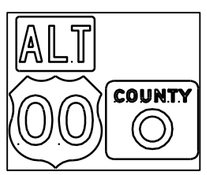

J4-2

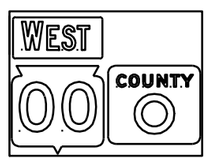

J4-2

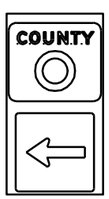

J13-1

J12-1

J32-1

J33-1

J23-1

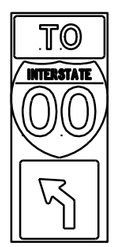

J22-1

NOTES

1. Signs are Type II - Type H Reflective - reference WIS DOT Standard Specification for HIGHWAY and STRUCTURE CONSTRUCTION latest edition.
2. Color:
   Background - Black Non-reflective
   Message - see Note 5
3. Message Series - See Note 5
4. Corners shall be square since base material is plywood.
5. The colors and message spacing on each marker shall be according to the applicable route marker panel specifications.
6. Certain marker heads require the component pieces to be the same color. As an example, all the components used with an M1-1 Interstate marker shall be blue.
7. Single panel j-assemblies shall only be used with route marker shields that are same size. If the route marker shields are different size use multiple piece component.
8. Route assemblies that have 24 inch route shields and have dimensions greater than 48 inches (both vertical and horizontal) shall have one horizontal splice between the arrows and route shields. Vertical splices shall not be used on route assemblies with a horizontal dimension of 144 inches or less. The contractor shall not use more than one vertical joint per sign and the joint shall be between route shields.
9. Route assemblies that have 36 inch shields and have dimensions greater than 48 inchs (both vertical and horizontal) shall have two horizontal splices. One horizontal splice shall be between the cardinal direction and route shields and the other horizontal splice shall be between the arrows and route shields. Vertical splices shall not be used on route assemblies with a horizontal dimension of 144 or less. The contractor shall not use more than one vertical joint per sign and the joint shall be between route shields.

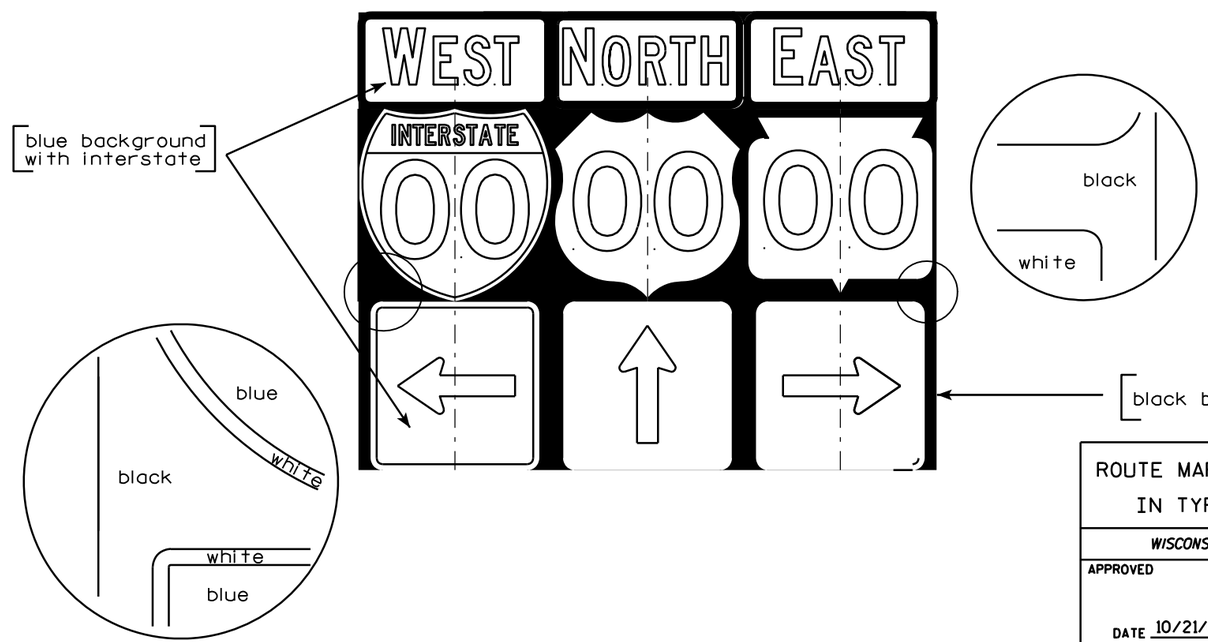

ROUTE MARKERS & COMPONENTS IN TYPICAL ASSEMBLIES

WISCONSIN DEPT OF TRANSPORTATION

APPROVED Matthew R Rauch
for State Traffic Engineer

DATE 10/21/09 PLATE NO. A2-1S.6

7

7

PROJECT NO:

SHEET NO: 170 E

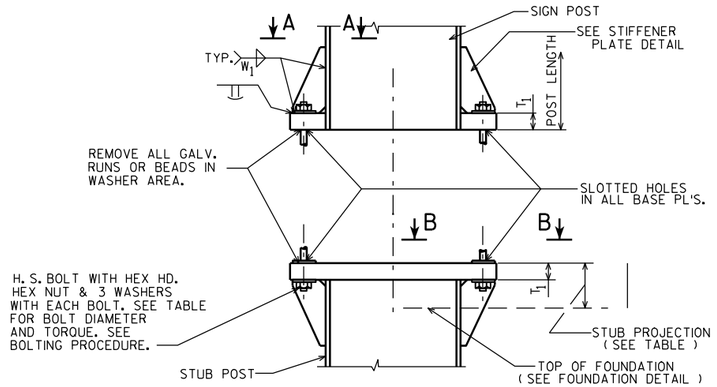

SIGN POST AND STUB POST ELEVATION

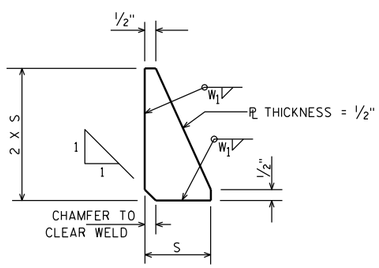

STIFFENER PLATE DETAIL

(SEE TABLE FOR DIMENSIONS)

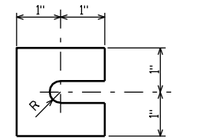

FURNISH 2 @ .012" ± THICK AND 2 @ .032" ± THICK SHIMS PER POST. SHIMS SHALL BE FABRICATED FROM BRASS SHIM STOCK OR STRIP CONFORMING TO A.S.T.M.- B36.

SHIM DETAIL

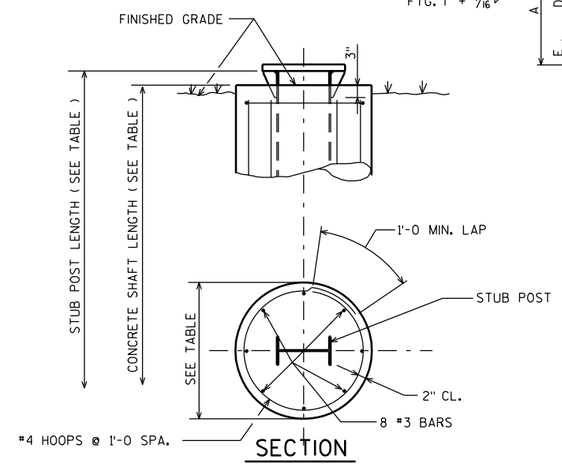

SECTION

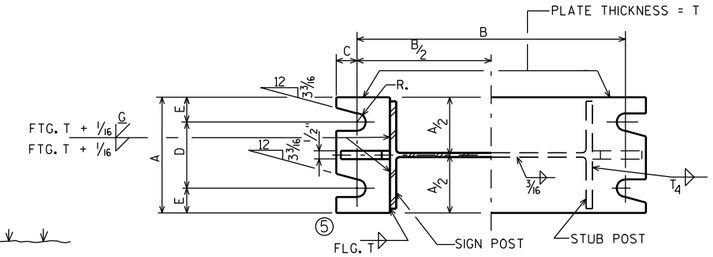

SECTION A-A SECTION B-B

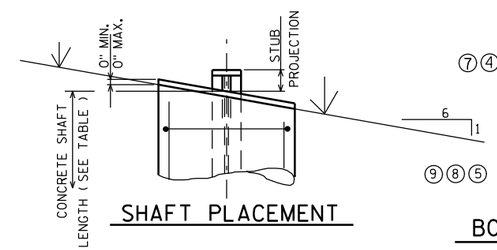

SHAFT PLACEMENT

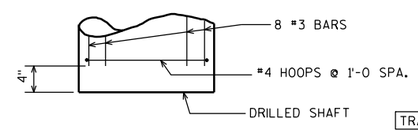

FOUNDATION DETAIL

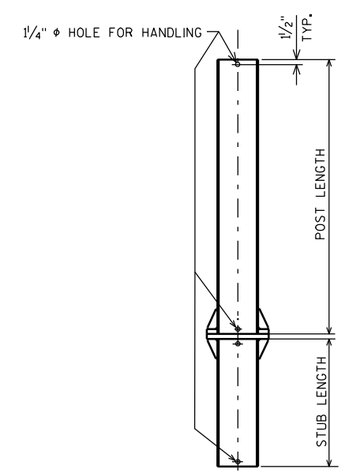

POST DETAIL

	QUANTITIES FOR 1 FOOTING	
	CONC. MASONRY C.Y.	REINF. STEEL LBS.
A	0.6	34
B	0.8	49
C	0.9	50
D	0.9	56
E	1.0	62

⑦

REINF.	TYPE	#3	#4
	A	8 @ 4'-5	5 @ 6'-3
	B	8 @ 6'-5	7 @ 6'-3
	C	8 @ 6'-11	7 @ 6'-3
	D	8 @ 7'-5	8 @ 6'-3
	E	8 @ 7'-11	9 @ 6'-3

⑦

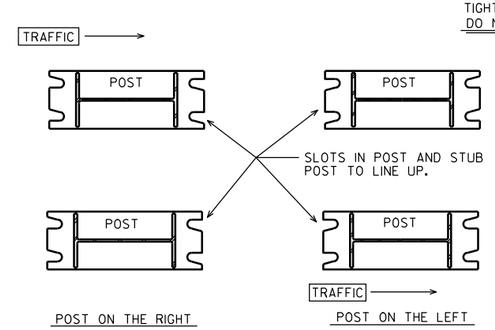

POST SLOT ORIENTATION ⑦

DESIGN DATA

WIND PRESSURE = 75 M.P.H.
WIND COMPONENTS - NORMAL = 1.0 TRANSVERSE = 0.0
ICE LOAD = 3 P.S.F.

GROUP LOADS	PERCENT OF ALLOWABLE STRESS
1. DEAD	100
2. DEAD & WIND	140
3. DEAD, ICE & 1/2 WIND▲	140 ▲25 P.S.F. MIN.

ALLOWABLE SOIL PRESSURE = 1 1/2 T / SQ. FT.
WIND LOAD WAS APPLIED TO THE AREA OF THE SIGN AND TO THE SUPPORTING MEMBERS.
ICE LOAD WAS APPLIED TO ONE FACE OF THE SIGN AND AROUND THE SURFACE OF THE SUPPORTING MEMBERS.

GENERAL NOTES

DRAWINGS SHALL NOT BE SCALED.
DESIGN CONFORMS WITH A.A.S.H.T.O. SPECIFICATIONS 1985.
ALL POSTS, POST STUBS & ATTACHMENTS SHALL BE A.S.T.M. A709 GRADE 50.
⑨ THE POST, BASE PLATES, UPPER SIX INCHES OF STUB POST FLANGE SPLICE PLATE AND FUSE PLATE SHALL BE GALVANIZED AFTER FABRICATION.
H.S. BOLTS, WASHERS & NUTS SHALL BE A325 GALVANIZED WHEN POSTS, POST STUBS AND ATTACHMENTS ARE A709 GRADE 50 AND GALVANIZED.

BOLTING PROCEDURE - BASE CONNECTION

1. ASSEMBLE SIGN POST TO STUB POST WITH BOLTS AND ONE OF THE FLAT WASHERS ON EACH BOLT BETW. PLATES.
2. SHIM AS REQ'D. TO PLUMB POST.
3. TIGHTEN ALL BOLTS THE MAXIMUM POSSIBLE WITH 12" OR 15" WRENCH TO BED WASHERS & SHIMS AND TO CLEAN BOLT THREADS, THEN LOOSEN EACH BOLT IN TURN AND RETIGHTEN IN A SYSTEMATIC ORDER TO THE PRESCRIBED TORQUE. (SEE TABLE)
4. BURR THREADS AT JUNCTION WITH NUT USING A CENTER PUNCH TO PREVENT NUT LOOSENING.

NOTE:
TIGHTEN THE HIGH STRENGTH BOLTS TO THE TORQUE SHOWN. DO NOT OVERTIGHTEN.

	TYPE	DIMENSION / POST SIZE	BOLT SIZE & TORQUE	A	B	C	D	E	T_1	T_4	W_1	R	S	STUB LENGTH	STUB PROJECTION	SHAFT DIAMETER	SHAFT LENGTH	K	
			BASE CONNECTION DATA TABLE											FOUNDATION DATA				②	
④	A	W10"X12.0 #/FT.	3/4" Φ @ 75#-FT.	5 1/4"	1'-0 3/8	7/8"	3 1/2"	7/8'	1"	3/16"	5/16"	13/32"	2 1/8"	3'-6	3"	2'-0 Φ	5'-0	76.0#	④
④	B	W12"X16.0 #/FT.	7/8" Φ @ 85#-FT.	5 1/2"	1'-4 1/4	1"	3 1/2"	1"	1 1/4"	1/4"	5/16"	15/32"	3"	5'-6	3"	2'-0 Φ	7'-0	146.5#	④
	C	W12"X19.0 #/FT.	7/8" Φ @ 85#-FT.	5 1/2"	1'-4 1/4	1"	3 1/2"	1"	1 1/2"	5/16"	5/16"	15/32"	3"	6'-0	3"	2'-0 Φ	7'-6	182.1#	
	D	W12"X22.0 #/FT.	7/8" Φ @ 85#-FT.	5 1/2"	1'-4 1/4	1"	3 1/2"	1"	1 1/2"	3/8"	5/16"	15/32"	3"	6'-6	3"	2'-0 Φ	8'-0	210.5#	
③	E	W12"X26.0 #/FT.	1" Φ @ 90#-FT.	7"	1'-4 1/4	1 1/4"	4"	1 1/2"	1 1/2"	3/8"	5/16"	17/32"	3"	7'-0	3"	2'-0 Φ	8'-6	293.0#	③

① ⑥ ①

STRUCTURAL CARBON STEEL PAY WTS. (1 POST) = K+ (POST LENGTH X POST WT.)
" K " INCLUDES STUB, BASE PLATES, STIFFS., BOLTS, AND WASHERS.

WISCONSIN DEPT OF TRANSPORTATION
APPROVED Matthew R Rauch for State Traffic Engineer
DATE 4/26/11 PLATE NO. A3-1.13

NO.	DATE	REVISION
⑨	4-26-11	REMOVE NON-GALVANIZED
⑧	10-30-96	NOT GALVANIZED/GALVANIZED
⑦	10-30-92	QUANT., A588 EXCEPT., ADD SLOT VIEW
⑥	8-24-87	BASE CONN. WELD
⑤	10-13-81	BASE CONN. WELD & FUSE PL WASHERS
④	10-19-79	POST A & B, A572 GR. 50, & K
②	11-28-78	"K" ③ 4-23-79 TYPE "E"
①	5-4-78	T_1 , T_2 & W_1

STATE OF WISCONSIN
DEPARTMENT OF TRANSPORTATION
DIVISION OF HIGHWAYS

TYPE A, B, C, D, & E

CONST. SPEC. 2011 | DRAWN BY JPH | PLANS CK'D.

FTG. & SIGN SUPPORT DETAILS GROUND MOUNT BREAK-AWAY SIGNS

SHEET

PROJECT NO: | HWY: | COUNTY: | SHEET NO: 171 | E

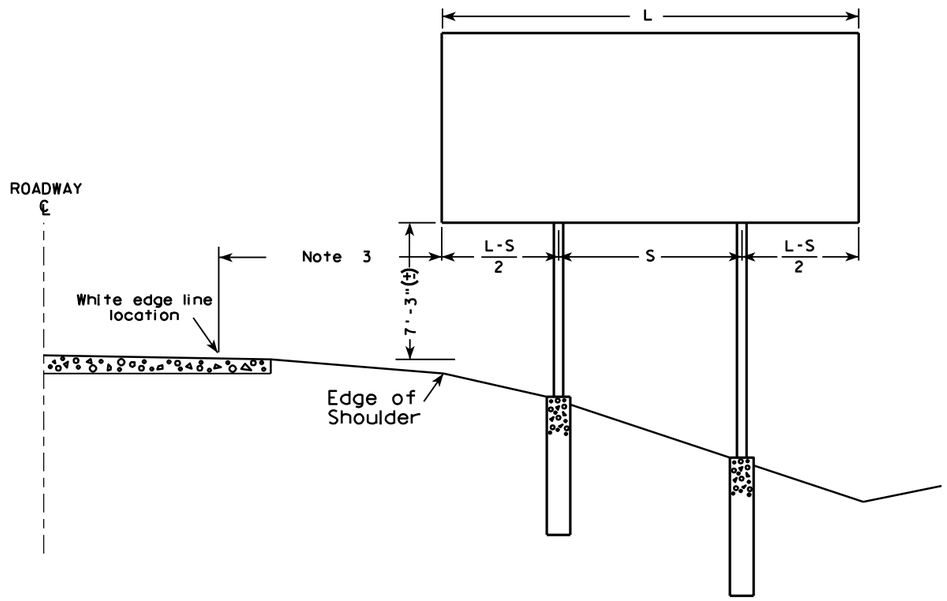

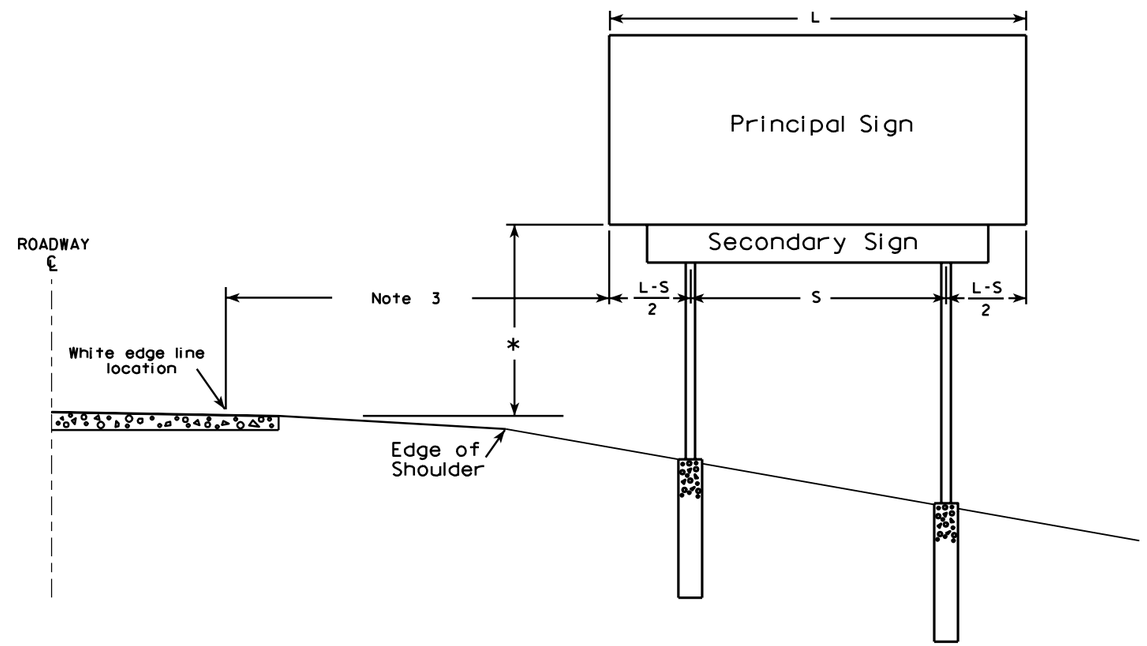

GENERAL NOTES

1. For a 2 post installation, S equals 3L/5, but shall not be less than 9 ft.
2. For a 3 post installation, S equals 5L/7, but shall not be less than 18 ft., and the space between any two posts shall not be less than 9 ft.
3. Unless noted in the plan, the sign offset distance shall be a minimum of 17'-6", desirable 30'-0".
4. The (±) tolerance shown on this sheet is 3 in.
5. The vertical sign height clearance detailed is measured from the bottom of the sign to the near edge of pavement.
6. Post lengths shown in the miscellaneous quantities are estimated lengths. The contractor shall verify post lengths at the time of final grading.
7. Refer to the Traffic Guidelines Manual for further guidance on minimum vertical clearance requirements.

* Clearance is 8'-3"(±) when the secondary sign is 3 ft. or less in height. For secondary signs larger than 3 ft., the clearance to the bottom of the secondary sign shall be 5'-3"(±).

7

7

TYPICAL INSTALLATION OF TYPE I SIGNS

WISCONSIN DEPT OF TRANSPORTATION

APPROVED Matthew R Rauch
for State Traffic Engineer

DATE 4/02/08 PLATE NO. A4-1.9

PROJECT NO:				SHEET NO: 172	E

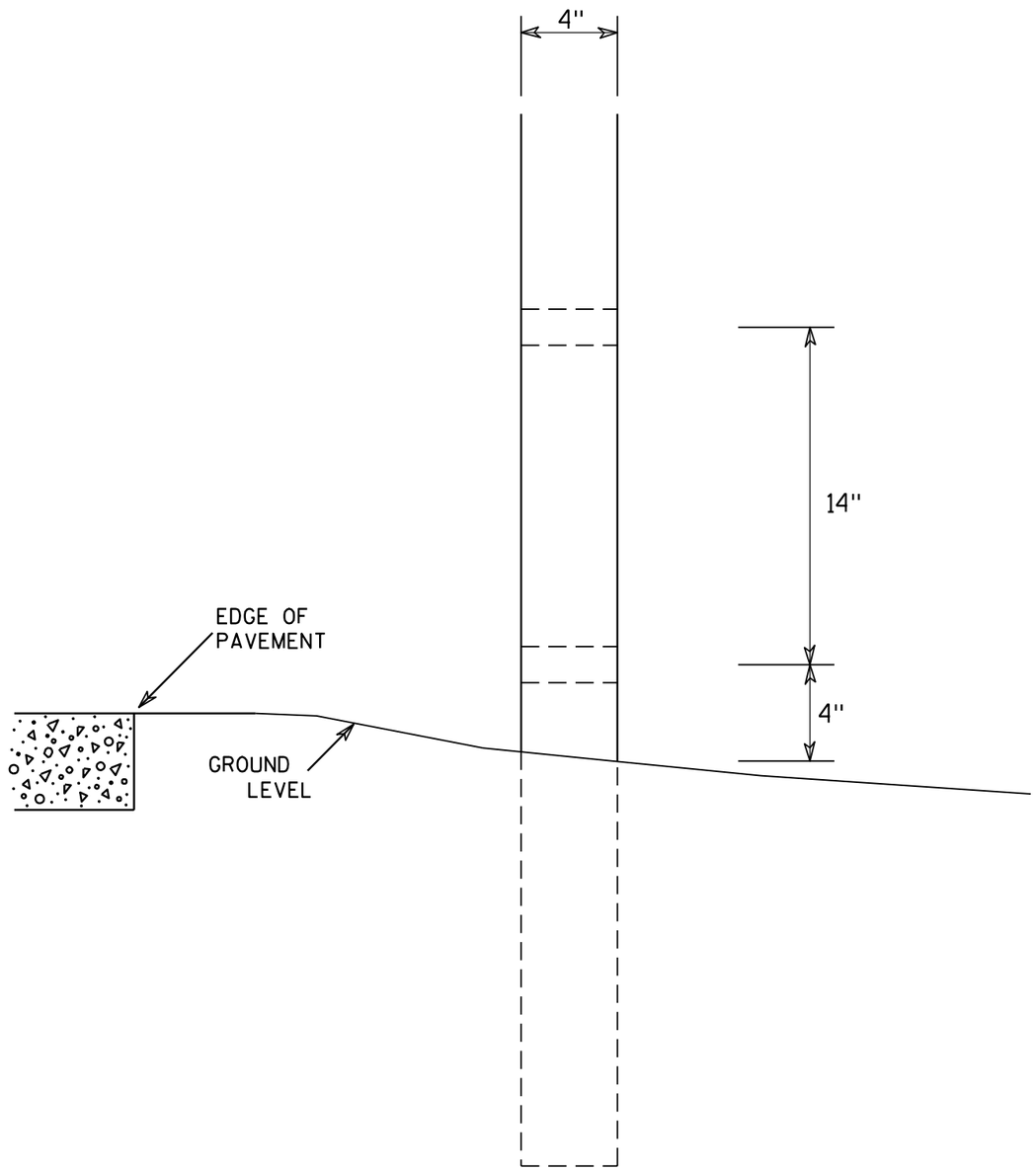

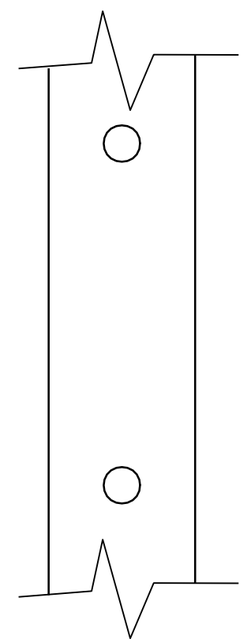

SIDE VIEW

GENERAL NOTES

1. All 4 x 6 Wood Posts shall be modified by having two 1½" diameter holes drilled perpendicular to the roadway centerline.

7

7

4 X 6 WOOD POST MODIFICATIONS

WISCONSIN DEPT OF TRANSPORTATION

APPROVED Chester J Spang for State Traffic Engineer

DATE 3/27/97 PLATE NO. A4-11.2

PROJECT NO:	HWY:	COUNTY:		SHEET NO: 173	E

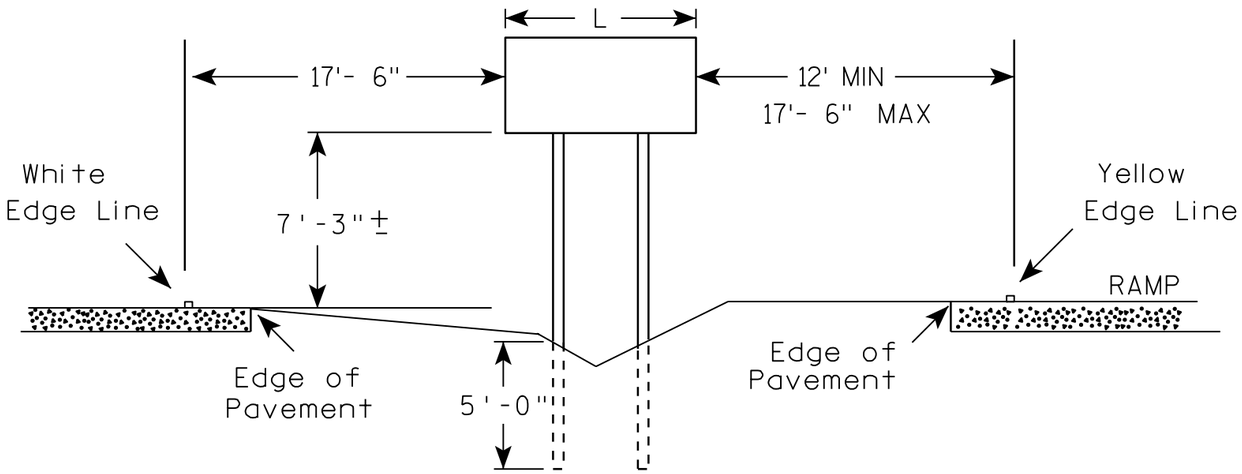

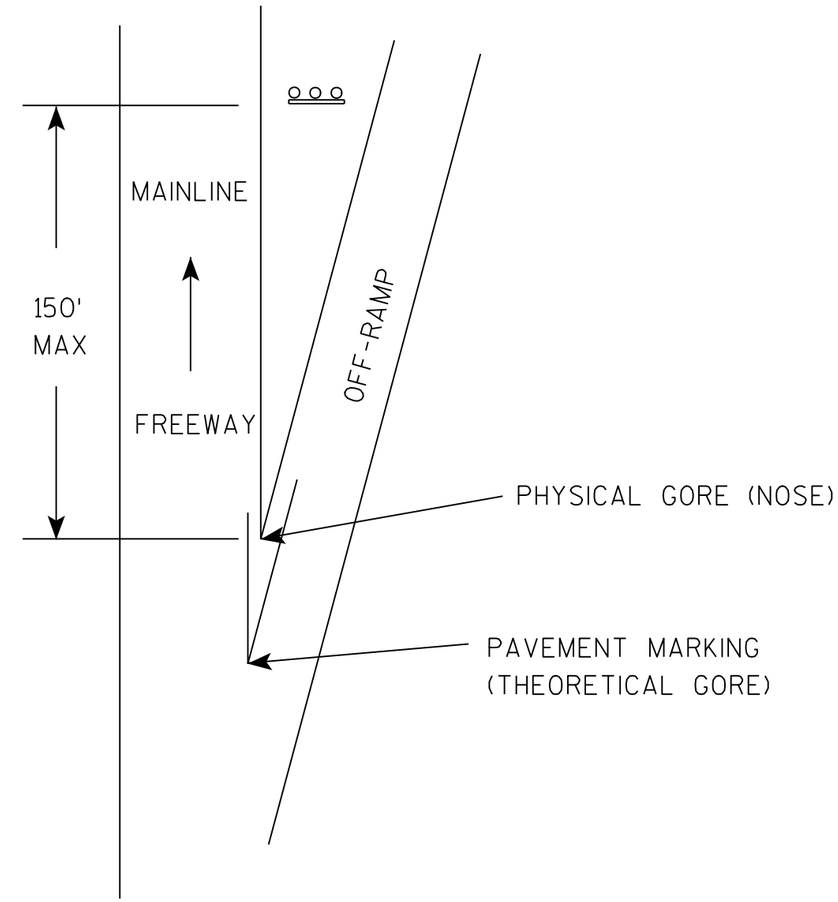

GENERAL NOTES

1. The 150 foot distance from the physical gore (where pavement ends) will normally provide the offsets as shown.

2. If roadway geometrics permit, the sign may be closer than the 150 foot distance as long as the offsets are maintained.

3. At no time shall the location be greater than 150 feet. If the normal offsets cannot be maintained, they can be reduced to 6 feet from the edge of the paved shoulder (both freeway and ramp).

4. The offset from edge of sign to the yellow edge line on the ramp is shown as a minimum of 12 feet and a maximum of 17 feet, 6 inches. Preference is adhering to the maximum rather than the minimum dimension.

5. When L is equal to or exceeds 9 feet, use 3 posts as per A4-4.

6. The (∓) tolerance for the mounting height is 3 inches.

7

7

TYPICAL INSTALLATION OF TYPE II SIGNS ON WOOD POSTS IN GORE

WISCONSIN DEPT OF TRANSPORTATION

APPROVED Chester J Spang for State Traffic Engineer

DATE 4/4/00 PLATE NO. A4-2.2

PROJECT NO:				SHEET NO: 174	E

URBAN AREA

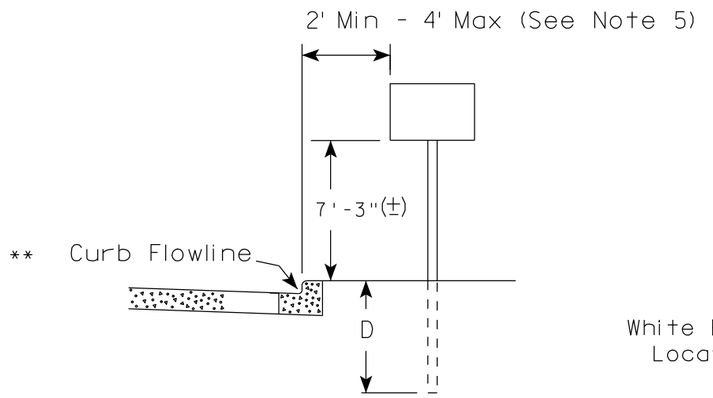

RURAL AREA (See Note 2)

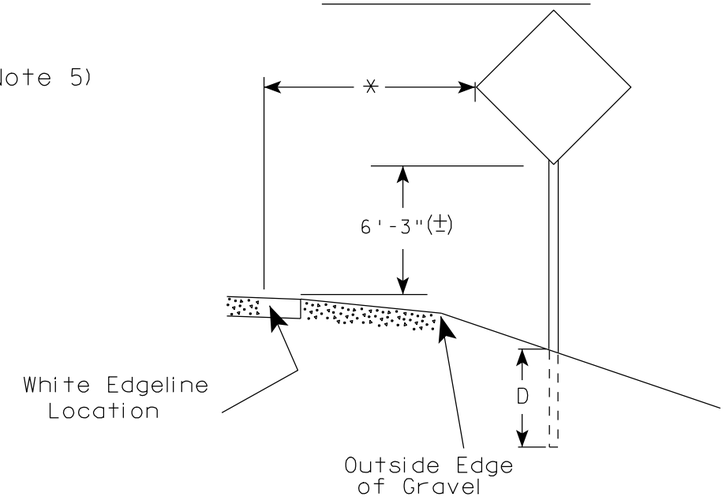

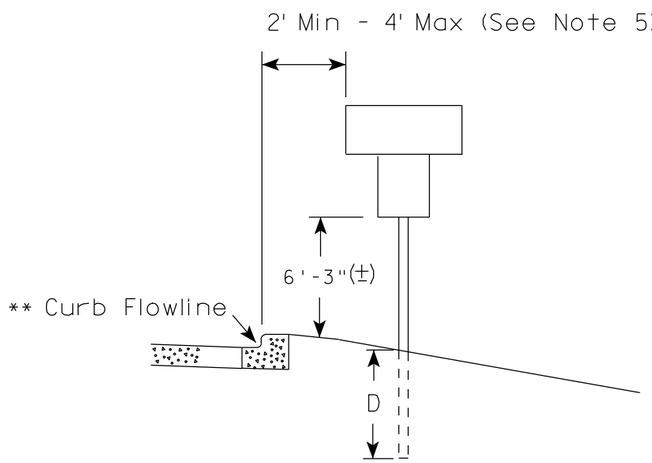

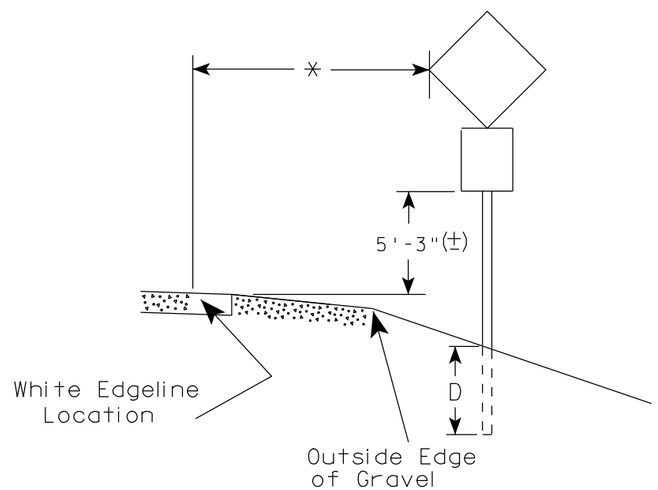

** The existence of curb and gutter does not in itself mandate the vertical clearance illustrated. That height is typically measured where there is sidewalk adjacent to the roadway or parking is permitted. In the absence of sidewalk vertical clearance is measured from the top of the curb. Offset of signs is measured from the flow line.

* 6 feet from edge of a paved shoulder or 12 feet from the edge of pavement (edge line location) or 2 feet from outside edge of gravel, whichever is greater unless directed by project engineer.

GENERAL NOTES

1. Signs wider than 4 feet or larger than 20 sq. ft. shall be mounted on multiple posts. Refer to plate A4-4.
2. If signs are mounted on barrier wall, see A4-10 sign plate.
3. For expressways and freeways, mounting height is 7'- 3" (±) or 6'-3" (±) depending upon existence of a sub-sign.
4. Minimum mounting height for J assemblies (A4-5) is 7'-3" (±) or 6'-3" (±) per urban or rural detail respectively.
5. Minimum mounting height for signs mounted on traffic signal poles is 5'- 3" (±).
6. Offset distance shall be consistent with existing signs or consistent throughout length of project.
7. The (±) tolerance for mounting height is 3 inches.
8. Folding stop signs (R1-1F) shall be mounted at a height of 5'-3" (±) or as directed by the Engineer.
9. The Double Arrow sign (W12-1) shall be mounted at a height of 2'-3" (±). The Chevron sign (W1-8), Roundabout Chevron panel (R6-4B), Clearance Markers (W5-52), Mile Markers (D10 series) & End of Road Markers (W5-56 & W5-56A) shall be mounted at a height of 4'-3" (±).

POST EMBEDMENT DEPTH

Area of Sign Installation (Sq. Ft.)	D (Min)
20 or Less	4'
Greater than 20	5'

TYPICAL INSTALLATION OF PERMANENT TYPE II SIGNS ON SINGLE POSTS

WISCONSIN DEPT OF TRANSPORTATION

APPROVED Matthew R Rauch for State Traffic Engineer

DATE 9/21/2011 PLATE NO. A4-3.16

7

7

PROJECT NO:	HWY:	COUNTY:		SHEET NO: 175	E

URBAN AREA

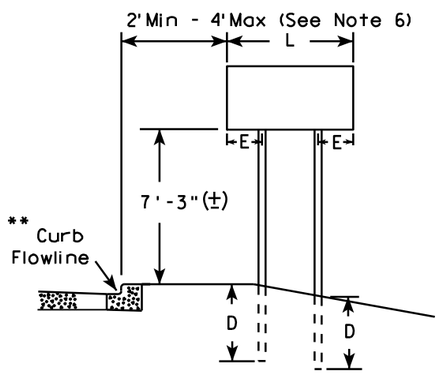

RURAL AREA (See Note 3)

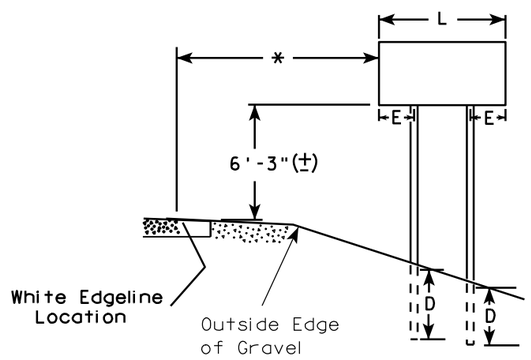

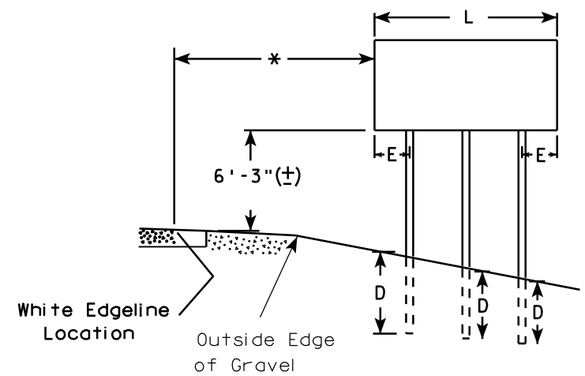

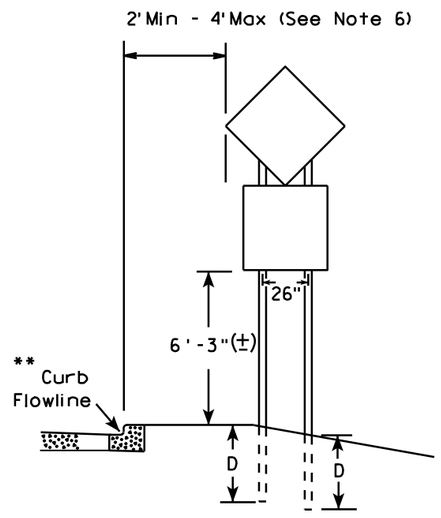

48" DIAMOND WARNING SIGN

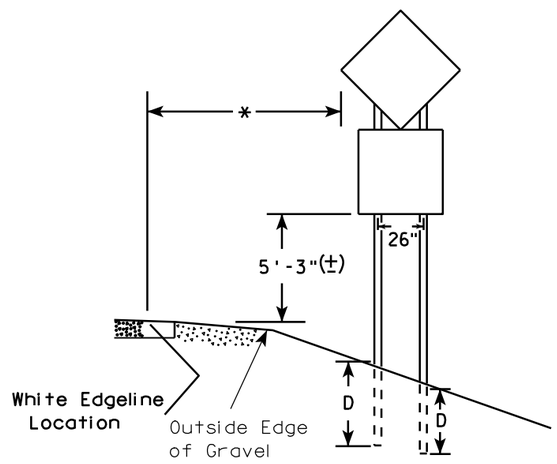

48" DIAMOND WARNING SIGN

GENERAL NOTES

1. For multiple post installations, individual post spacing shall be greater than 3'-6".
2. See tables below for required number of posts.
3. For expressways and freeways, mounting height is 7'-3" (±) or 6'-3" (±) depending upon existence of sub-sign.
4. The (±) tolerance for mounting height is 3 inches.
5. Minimum mounting height for J assemblies (A4-5) is 7'-3" (±) or 6'-3" (±) per urban or rural detail respectively.
6. Offset distance shall be consistent with existing signs or consistent throughout length of project.
7. Folding stop signs (R1-1F) shall be mounted at a height of 5'-3" (±) or as directed by the engineer.
8. The Double Arrow sign (W12-1) shall be mounted at a height of 2'-3" (±). The Chevron sign (W1-8), Roundabout Chevron panel (R6-4B), Clearance Markers (W5-52), Mile Markers (D10 series) & End of Road Markers (W5-56 & W5-56A) shall be mounted at a height of 4"-3" (±).

* 6 feet from edge of a paved shoulder or 12 feet from the edge of pavement (edge line location) or 2 feet from outside edge of gravel, whichever is greater unless directed by project engineer.

** The existence of curb and gutter does not in itself mandate the vertical clearance illustrated. That height is typically measured where there is sidewalk adjacent to the roadway or parking is permitted. In the absence of sidewalk vertical clearance is measured from the top of the curb. Offset of signs is measured from the flow line.

*** See A4-3 sign plate for signs 4' or less in width or 20 S.F. or less in area.

SIGN SHAPE OTHER THAN DIAMOND (TWO POSTS REQUIRED)	
L	E
*** Greater than 48" Less than 60"	12"
60" to 120"	L/5

SIGN SHAPE OTHER THAN DIAMOND (THREE POSTS REQUIRED)	
L	E
Greater than 120" less than 168"	12"

SIGN SHAPE OTHER THAN DIAMOND (FOUR POSTS REQUIRED)	
L	E
168" and greater	12"

POST EMBEDMENT DEPTH

Area of Sign Installation (Sq. Ft.)	D (Min)
20 or Less	4'
Greater than 20	5'

TYPICAL INSTALLATION OF TYPE II SIGNS ON MULTIPLE POSTS

WISCONSIN DEPT OF TRANSPORTATION

APPROVED Matthew R Rauch
for State Traffic Engineer

DATE 9/21/2011 PLATE NO. A4-4.11

7

7

PROJECT NO:	HWY:	COUNTY:		SHEET NO: 176	E

GROUND MOUNTED SIGN

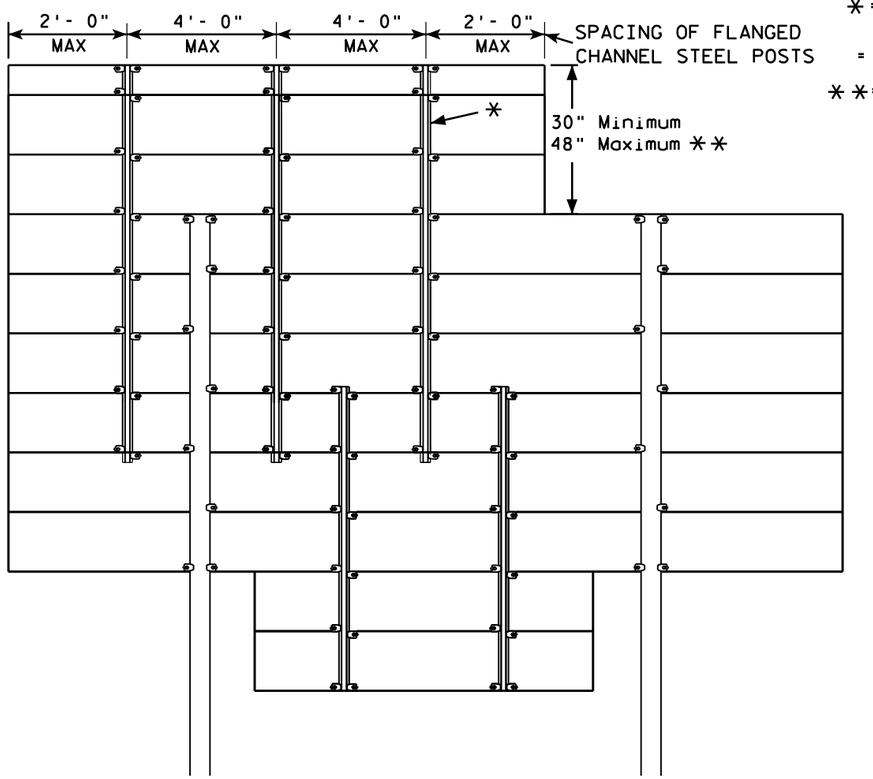

*=2.00 lb/ft FLANGED CHANNEL, MIN. YIELD STRENGTH = 60,000 PSI (GRADE 60) GALVANIZED

**=FOR 48" HEIGHT PANELS ON OVERHEAD STRUCTURES, ENTIRE SIGN SHALL BE CENTERED VERTICALLY ABOUT THE DEPTH OF THE TRUSS.

FLANGE CHANNEL DETAIL

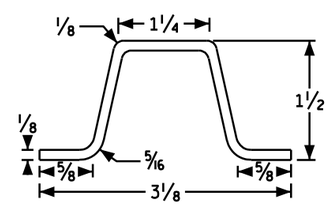

NOT TO SCALE

SIGN BRIDGE MOUNTED SIGN

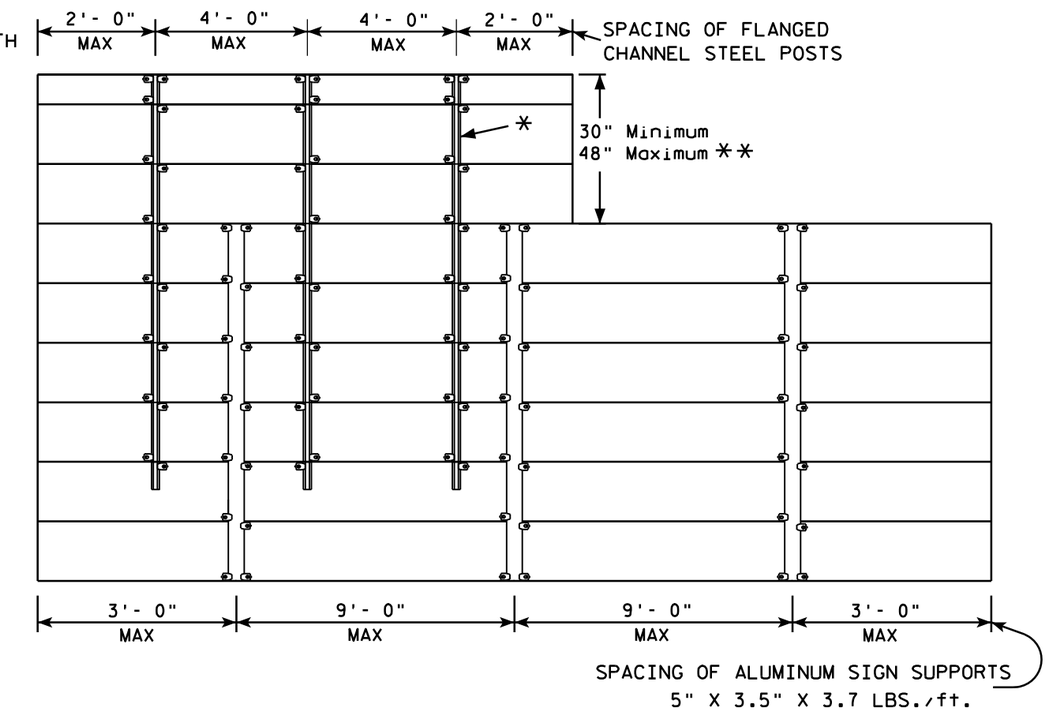

GENERAL NOTES

1. Flanged channel steel posts shall conform to size and material above, and shall be considered as incidental to other items in the contract.

2. Number of Flanged channel steel supports varies with length of panel and shall be spaced as shown:

   PANEL LENGTH 8'-0" OR LESS = 2 CHANNELS
   PANEL LENGTH 9'- 0" - 12'- 0" = 3 CHANNELS
   PANEL LENGTH 13'- 0" OR MORE = 4 CHANNELS

   If the flanged channel steel posts can not be horizontally spaced as shown, they can be moved so as to securely hold the sign.

3. The EXIT NUMBER PANEL shall normally be positioned above the guide sign aligned with the right edge of the guide sign. If the guide sign indicates a left exit, the EXIT NUMBER PANEL shall be aligned with the left edge of the guide sign.

4. If the bolt holes in the top panel (EXIT NUMBER), or sub panel (NEXT EXIT) line up with holes in main sign panel, stitch bolts shall be used in addition to the channels.

5. Provide post clips for each sign as shown. (Please note the differences between a ground mounted versus Sign bridge mounted sign as far as number of clips required on the main supports or beams)

7

7

ATTACHMENT OF GUIDE SIGNS TO SUPPORTS

WISCONSIN DEPT OF TRANSPORTATION

APPROVED Matthew R Rauch for State Traffic Engineer

DATE 6/7/10 PLATE NO. A4-6.11

PROJECT NO:				SHEET NO: 177	E

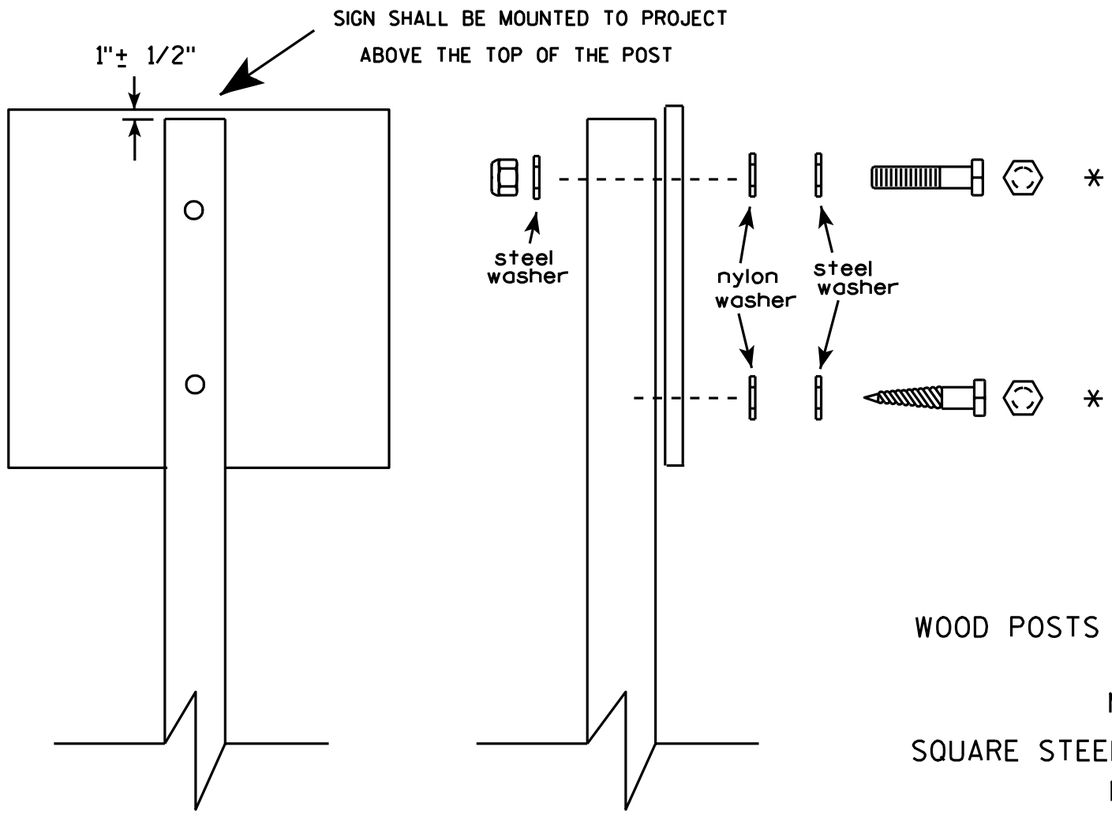

Nuts, bolts and lags used for mounting signs shall have hexagonal heads and shall be either :

a. Hot dip galvanized in accordance with ASTM Designation: A 153, Class D, or SC 3

b. Electro-galvanized in accordance with ASTM Designation : B 633, TYPE III, SC 3.

Threads on bolts and nuts shall be manufactured with sufficient allowance for the cadmium plate or galvanized coating to permit the nuts to run freely on the bolts.

WOOD POSTS (4" x 4" or 4" x 6")

LAG SCREWS - 3/8" X 3"

MACHINE BOLTS - 5/16" X 6-1/2" or 7" Length w/ nuts

SQUARE STEEL POSTS (2" x 2")

MACHINE BOLTS - 3/8" X 3-1/4" Length w/ nuts

RIVETS - 9/32 " (6605-9-6) BULB-TITE, TRI-FOLD, ALUMINUM BODY/MANDREL O.D. FLANGE .720-.765 INCH, GRIP RANGE .042-.375 INCH

WASHERS (ALL POSTS) -

1-1/4" O.D. X 3/8" I.D. X 1/16" STEEL

1-1/4" O.D. X 3/8" I.D. X .080 NYLON for all Type H signs.

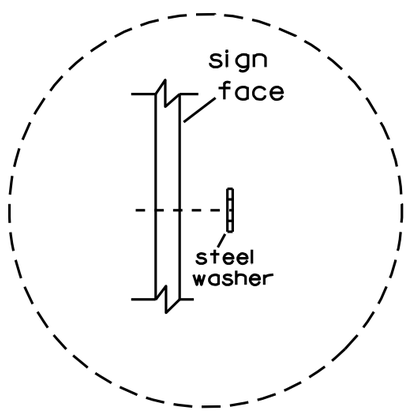

Washer Placement when Sign Has Other Than Type H or Type F Face

* Two different fastening systems are shown for illustration purposes. On any individual sign, either one or the other system shall be used. Actual number of fasteners per sign varies with the sign area, but normally there are two. For a single post installation, all signs greater than 9 sq. ft. require the use of 3 fasteners.

ATTACHMENT OF SIGNS TO POSTS

WISCONSIN DEPT OF TRANSPORTATION

APPROVED Matthew R Rauch
for State Traffic Engineer

DATE 3/23/10 PLATE NO. A4-8.7

Extruded Shape

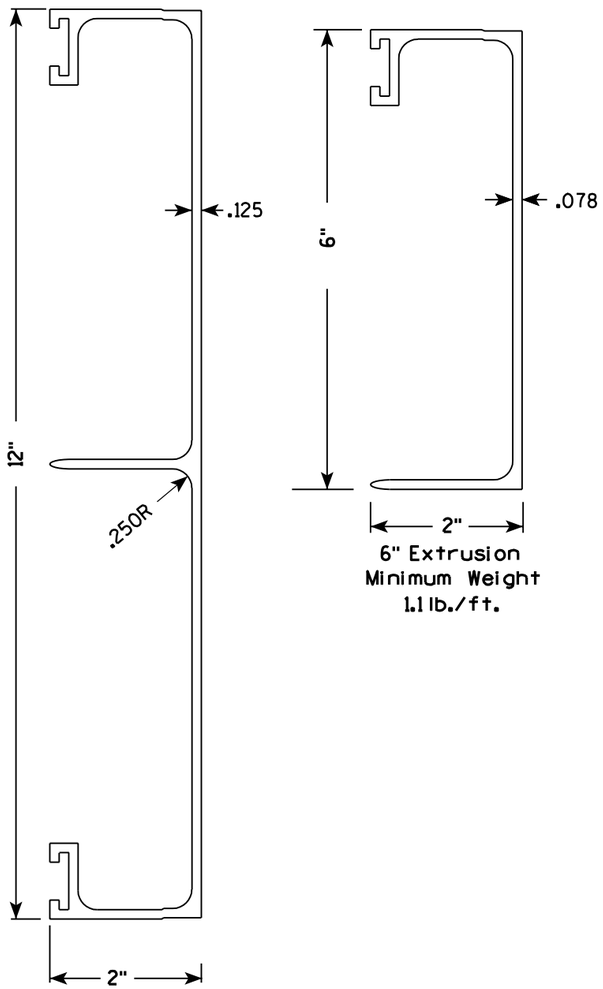

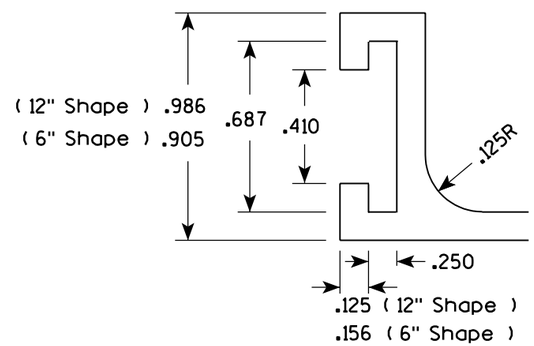

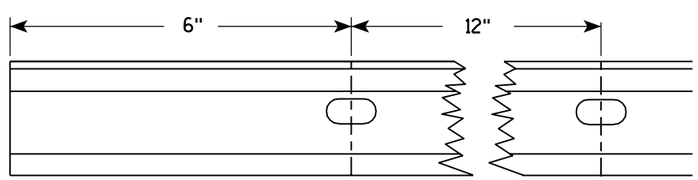

Punch 7/16" x 7/8" oval holes beginning 6" in from end of extrusion 12" CC on both edges of 6" and 12" panels.

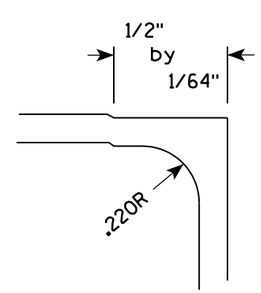

Hardware

STITCH BOLT, WASHER & NUT

The hardware includes:

- 3/8 " - 16 X 3/4 " Economy Bolt 2024-T4 alloy
- 3/8 " - Stainless steel stop nut
- 3/8" X .064 Flat Washers, Alclad 2024-T4 alloy

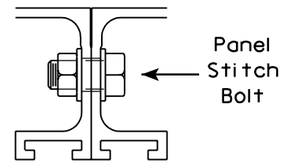

POST CLIP, POST CLIP BOLT, WASHER & NUT

Post Clip shall be Alum. Alloy 356-T6
Post Clip Bolt shall be Stainless Steel.
Flat washer shall be 3/8" X .091, Stainless Steel.
Stop nut shall be stainless steel.

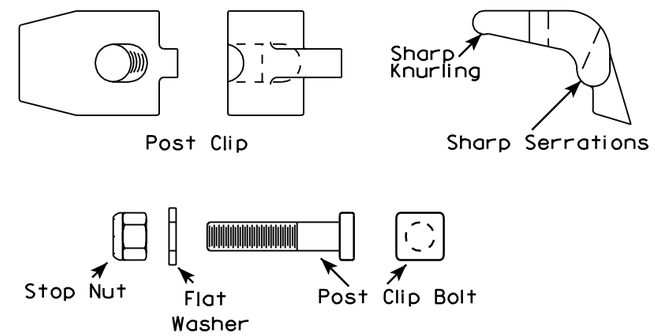

NOTES

1. The contractor may select any brand of extrusion that conforms to the illustrations or meets with the approval of the engineer, but all extrusions used on this contract shall be of the same brand.
2. Panel Stitch Bolts shall be used to assemble adjacent panels. Maximum stitch bolt spacing shall be 24" C-C, and a minimum of 4 bolts shall be used to connect any two extrusions.
3. Post Clips shall be used to attach the sign panel to the sign support.

7

7

ALUMINUM EXTRUSIONS FOR TYPE I SIGNS

WISCONSIN DEPT OF TRANSPORTATION

APPROVED Chester J Spang for State Traffic Engineer

DATE 11/18/99 PLATE NO. A5-2.9

PROJECT NO:

SHEET NO: 179 E

BRACE BANDING

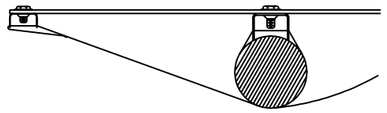

DETAIL C
CADMIUM PLATED STEEL BOLT
THROUGH BLACK BORDER

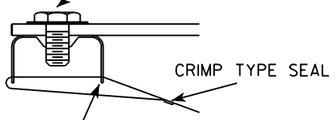

DETAIL C

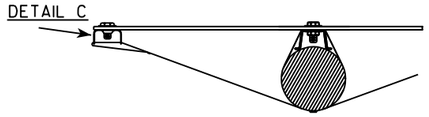

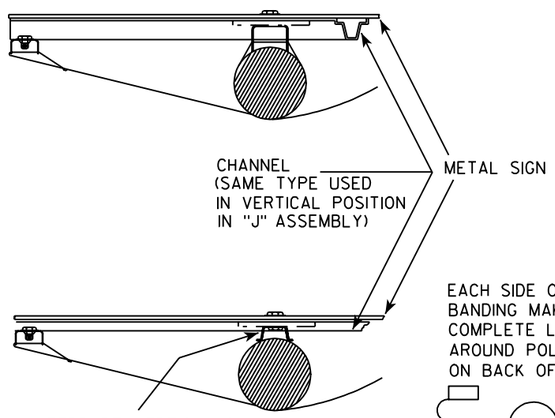

EACH SIDE OF BRACE
BANDING MAKES ONE
COMPLETE LOOP
AROUND POLE-SEAL
ON BACK OF POLE

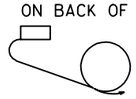

INTERRUPT VERTICAL CHANNEL
AT HORIZONTAL STIFFENERS

BRACKET BANDING

SINGLE SIGN

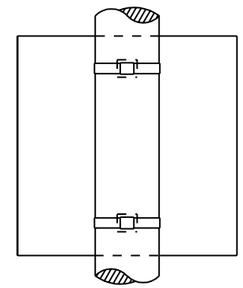

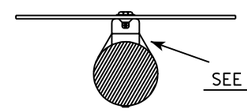

SEE DETAIL A

"J" ASSEMBLY

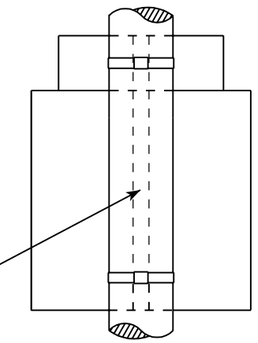

CHANNEL
SEE TYPICAL PANEL
INSTALLATION SHEET

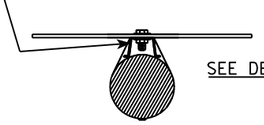

SEE DETAIL B

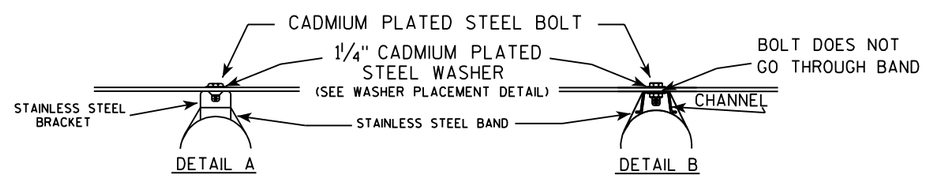

GENERAL NOTES

1. Signs 4' or greater in width shall have one brace band installed at the center of the sign.
2. Signs 3' or greater in height shall have three bracket bands installed. Signs less than 3' in height shall have two bracket bands installed.
3. Banding and assembly bracket shall be stainless steel. All bands shall be ¾" in width and 0.025" thickness.

WASHER PLACEMENT

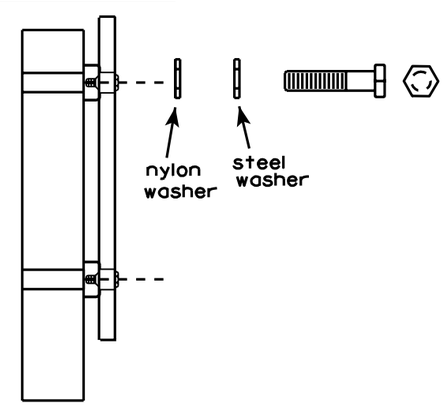

WASHERS (ALL POSTS) -
1-1/4" O.D. X 3/8" I.D. X 1/16" STEEL
1-1/4" O.D. X 3/8" I.D. X .080 NYLON
FOR ALL TYPE H SIGNS

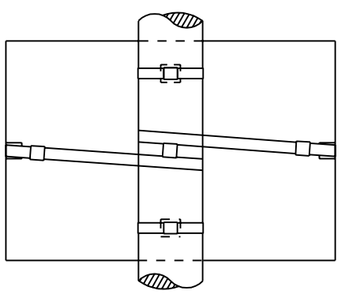

BRACE BANDING

BRACE BANDING SHALL BE TIGHTENED FIRMLY BUT NOT SO TIGHT AS TO APPRECIABLY CURVE FACE OF SIGN.

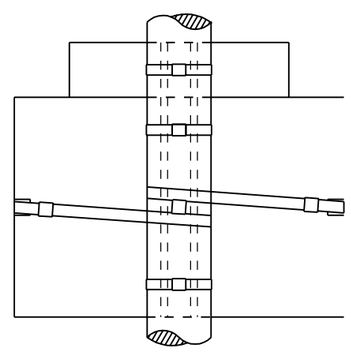

STANDARD SIGN
SIGN BANDING DETAILS

WISCONSIN DEPT OF TRANSPORTATION

APPROVED Matthew R Rauch
for State Traffic Engineer

DATE 11/08/05 PLATE NO. A5-9.2

PROJECT NO:	HWY:	COUNTY:		SHEET NO: 180	E

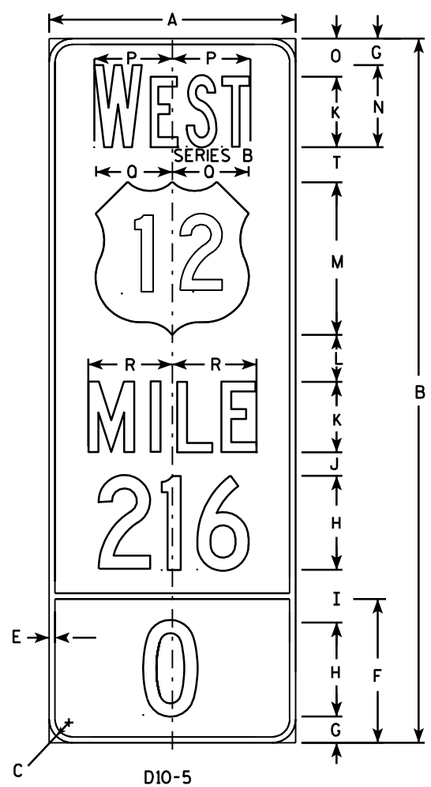

D10-5

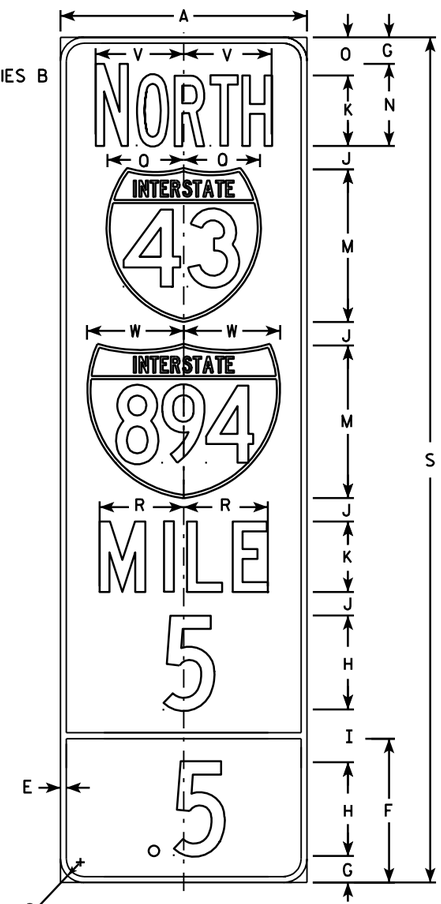

D10-5A

SERIES B

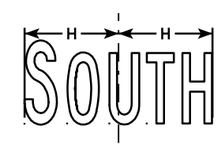

SERIES B

NOTES

1. Sign is Type II - Type H Reflective - reference WIS DOT Standard Specification for HIGHWAY and STRUCTURE CONSTRUCTION latest edition.
2. Color:
   Background - BLUE
   Message - WHITE
3. Interstate Shield Color
   Background - Top Red
   - Bottom Blue
   Message - White
4. Message Series - C or as noted on the Sign.
5. Corners may be square or rounded when base material is plywood but borders shall be rounded as shown. When base material is metal, the corners and borders shall be rounded.
6. The decimal point is required for all digits except "0".
7. Optically adjust mileage numbers about the centerline of the sign to achieve proper balance.

Metric equivalent for this sign is: SIZE	D10-5	Metric equivalent for this sign is: SIZE	D10-5A
1		1	
2		2	
3		3	
4	525 mm X 1500 mm	4	525 mm X 1950 mm
5	525 mm X 1500 mm	5	525 mm X 1950 mm

SIZE	A	B	C	D	E	F	G	H	I	J	K	L	M	N	O	P	Q	R	S	T	U	V	W	X	Y	Z	D10-5 Area sq. ft.	D10-5 Area m2	D10-5A Area sq. ft.	D10-5A Area m2
1																														
2																														
3																														
4	21	60	1 1/2		1/2	12 1/4	2 1/4	8	4 1/2	2	6	4	13	7	3 1/4	6 5/8	6 1/2	7 1/8	72	3		7 1/2	8 1/4				8.75	0.79	10.5	1.03
5	21	60	1 1/2		1/2	12 1/4	2 1/4	8	4 1/2	2	6	4	13	7	3 1/4	6 5/8	6 1/2	7 1/8	72	3		7 1/2	8 1/4				8.75	0.79	10.5	1.03

STANDARD SIGN
D10-5

WISCONSIN DEPT OF TRANSPORTATION

APPROVED Matthew R Rauch
for State Traffic Engineer

DATE 3/09/05 PLATE NO. D10-5.1

PROJECT NO:

SHEET NO: 181 E

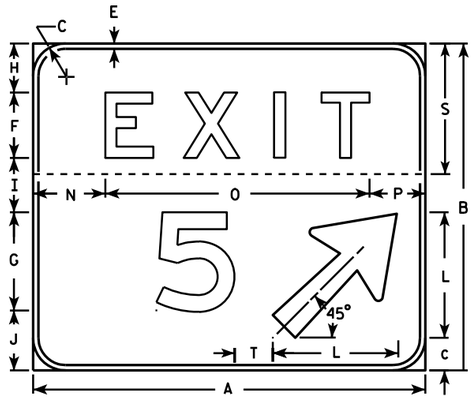

NOTE: T diminision shall be measured from the back of the number to the front of the arrow

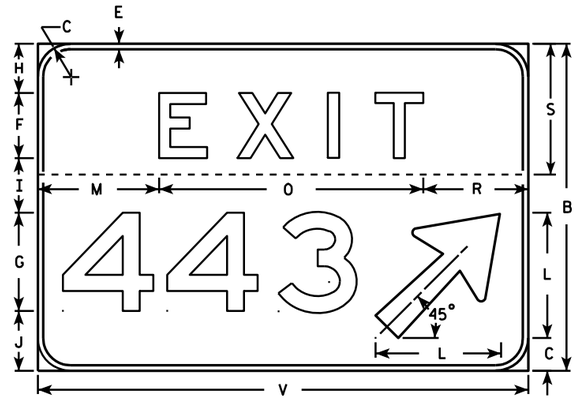

NOTES

1. Sign is Type II - Type H reflective - reference WIS DOT Standard Specification for HIGHWAY and STRUCTURE CONSTRUCTION latest edition.
2. Color:
   Background - Green
   Message - White (Type H reflective)
3. Message Series - E
4. Corners may be square or rounded but the border shall be rounded as shown.
5. Base material for this sign shall be plywood and shall be split into two seperate pieces as shown on each detail by the dashed line (----------).
6. Arrow is Type "A" from sign plate A1-1.
7. Substitute appropriate message, space per the table and adjust placement on sign to achieve proper balance.
8. As per the Standard Spec's, these signs shall not have a vertical joint.

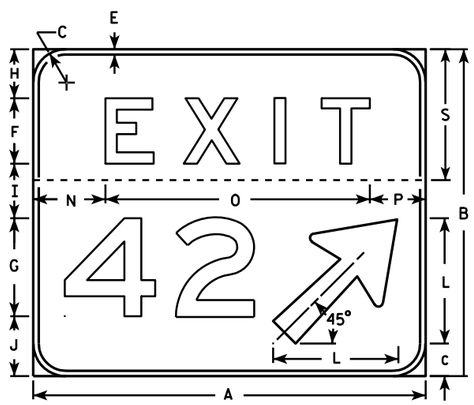

EXAMPLE FOR USING SPACING CHART

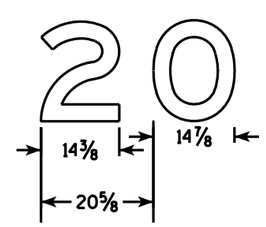

SPACING CHART FOR 18" NUMERALS

NUMBERS	WIDTH	0	1	2	3	4	5	6	7	8	9	A	B	C
0	14 7/8	21 5/8	21 5/8	21 1/4	20 3/8	21 1/4	21 1/4	21 5/8	19 7/8	22 1/8	21 5/8			
1	5 7/8	14	14	14	13 1/8	12 1/8	14	14	12 1/4	14	14			
2	14 3/8	20 5/8	21 1/8	20 5/8	19 3/4	20 1/4	20 5/8	20 5/8	18 7/8	21 1/8	20 5/8			
3	14 3/8	20 3/4	21 1/8	20 3/4	20 1/4	19 3/4	20 3/4	20 3/4	19 3/8	21 1/8	20 3/4			
4	16 5/8	22 7/8	22	22 1/2	21 5/8	21 5/8	22 7/8	22 7/8	20 5/8	23 3/8	22 7/8			
5	14 1/4	20 5/8	20 5/8	20 1/8	18 3/4	18 3/4	20 5/8	20 5/8	18 3/8	20 5/8	20 5/8			
6	14 1/2	21 1/4	20 3/4	20 3/4	19 7/8	19 1/2	20 3/8	20 3/4	19	20 3/4	20 3/8			
7	14 3/8	19 3/4	19 3/4	20 1/4	19 3/4	17	19 3/4	20 5/8	18 7/8	20 5/8	19 3/4			
8	14 1/4	21 1/2	21 1/2	20 5/8	19 1/4	19 3/4	20 5/8	21 1/2	19 5/8	21 1/2	20 5/8			
9	14 1/2	21 1/4	21 1/4	20 7/8	20	20 7/8	20 7/8	21 1/4	19 1/2	21 3/4	21 1/4			
A	18	19 3/4	19 3/4	20 1/4	19 3/4	17	19 3/4	20 5/8	18 7/8	20 5/8	19 3/4	21 5/8	23 7/8	23
B	14 1/4	21 1/2	21 1/2	20 5/8	19 1/4	19 3/4	20 5/8	21 1/2	19 5/8	21 1/2	20 5/8	19 1/2	22 3/8	21 1/2
C	14 1/4	21 1/4	21 1/4	20 7/8	20	20 7/8	20 7/8	21 1/4	19 1/2	21 3/4	21 1/4	18 3/8	21	19 3/4

SIZE	A	B	C	D	E	F	G	H	I	J	K	L	M	N	O	P	Q	R	S	T	U	V	W	X	Y	Z
2																										
3																										
4																										
5	72	60	6		1	12	18	9	10	11	8 7/8	23	22 1/4	13 1/4	48 1/2	10 1/4		19 1/4	24	7		90		96	7 1/2	

1-2 Digit Bid Area	3 Digit Bid Area
Sq. Ft.	
30	37.5

STANDARD SIGN
E5-1A

WISCONSIN DEPT OF TRANSPORTATION

APPROVED Matthew R Rauch for State Traffic Engineer

DATE 5/11/10 PLATE NO. E5-1A.12

PROJECT NO: | HWY: | COUNTY: | SHEET NO: 182 | E

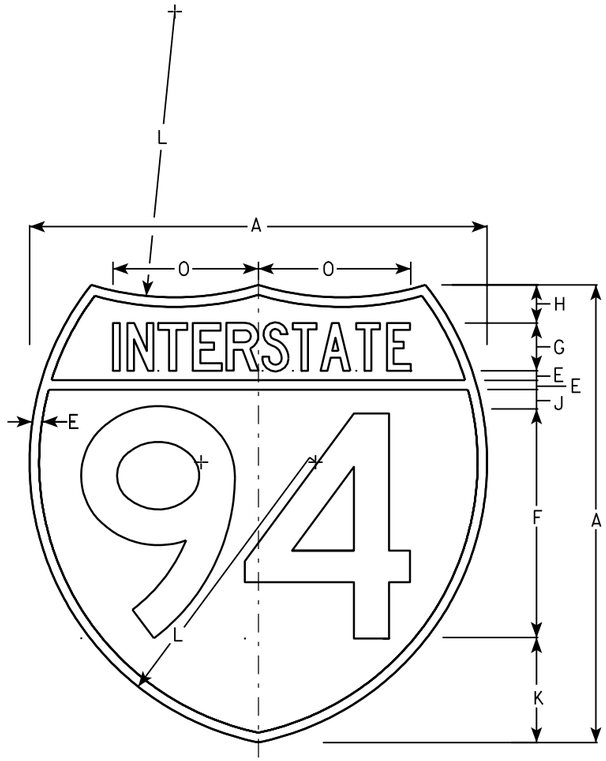

M1-1

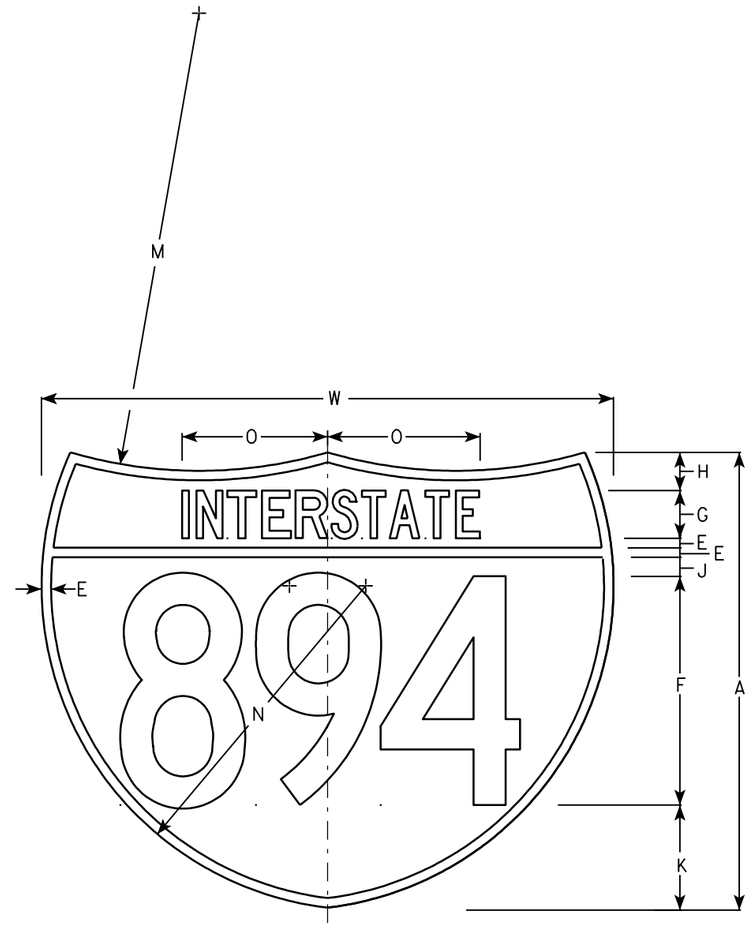

M1-1A

NOTES

1. Sign is Type II - See Note 6 - reference WIS DOT Standard Specification for HIGHWAY and STRUCTURE CONSTRUCTION latest edition.
2. Color:
   Background - Top Red - Bottom Blue (See Note 6)
   Message - White - See Note 6
3. Message Series - See note 5
4. Substitute appropriate numerals & ajust spacing as per plate A10-1.
5. M1-1 - Numerals - D
   Interstate - C
   M1-1A - All copy - C
6. Permanent Signs
   Message - Type H Reflective
   Detour or other temporary signs
   Background - Reflective
   Message - Reflective

7

Metric equivalent for these signs are:

SIZE	M1-1	SIZE	M1-1A
1			
2	600 mm X 600 mm	2	600 mm X 750 mm
3	900 mm X 900 mm	3	900 mm X 1125 mm
4	900 mm X 900 mm	4	900 mm X 1125 mm
5	900 mm X 900 mm	5	900 mm X 1125 mm

SIZE	A	B	C	D	E	F	G	H	I	J	K	L	M	N	O	P	Q	R	S	T	U	V	W	X	Y	M1-1 Area sq. ft.	M1-1A Area sq. ft.	M1-1 Area m2	M1-1A Area m2
1																													
2	24				1/2	12	2 1/2	2		1	5 1/2	15	24	17	7 7/8								30			3.13	3.91	.36	.46
3	36				3/4	18	3 3/4	3		1 1/2	8 1/4	22 1/2	36	25 1/2	11 3/4								45			7.03	8.79	.81	1.05
4	36				3/4	18	3 3/4	3		1 1/2	8 1/4	22 1/2	36	25 1/2	11 3/4								45			7.03	8.79	.81	1.05
5	36				3/4	18	3 3/4	3		1 1/2	8 1/4	22 1/2	36	25 1/2	11 3/4								45			7.03	8.79	.81	1.05

INTERSTATE ROUTE MARKER
M1-1 FOR ASSEMBLIES

WISCONSIN DEPT OF TRANSPORTATION

APPROVED Matthew R Rauch
for State Traffic Engineer

DATE 08/23/05 PLATE NO. M1-1.8

PROJECT NO:	HWY:	COUNTY:		SHEET NO: 183	E

NOTES

1. Sign is Type II - See Note 6 - reference WIS DOT Standard Specification for HIGHWAY and STRUCTURE CONSTRUCTION latest edition.
2. Color:
   Background - White & Black - See Note 6
   Message - Black
3. Message Series - See note 5
4. Corners may be square or rounded when base material is plywood but borders shall be rounded as shown. When base material is metal, the corners and borders shall be rounded.
5. Substitute appropriate numerals and adjust spacing as per Plate A10-1.
6. Permanent Signs
   Background - Type H Reflective
   Detour or other temporary signs
   Background - Reflective

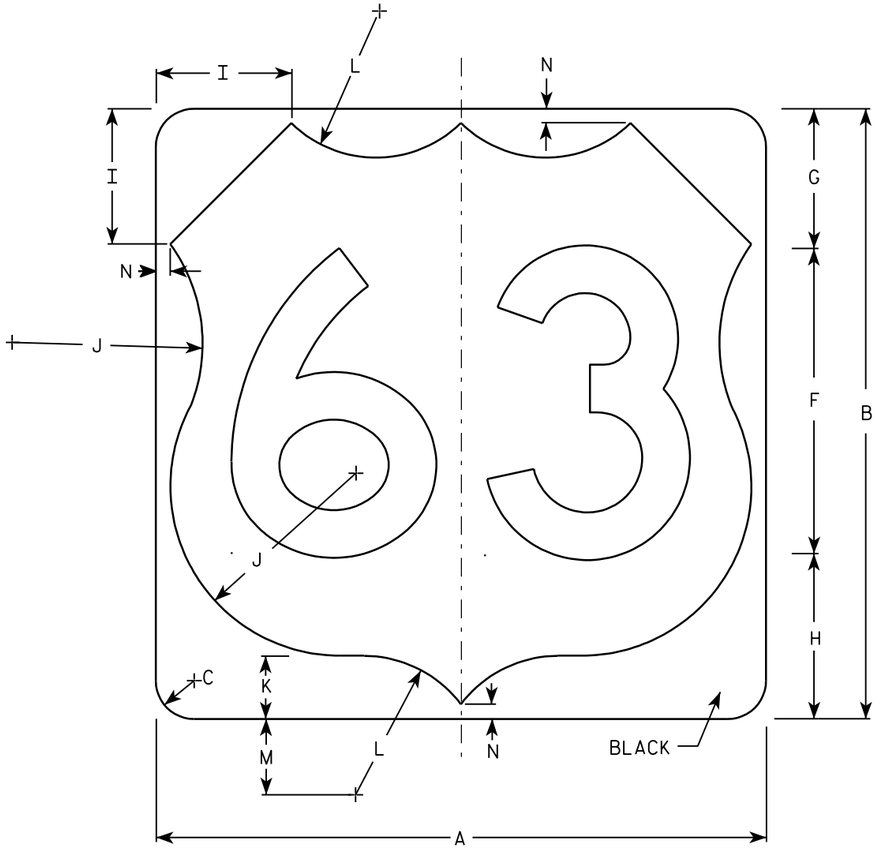

M1-4

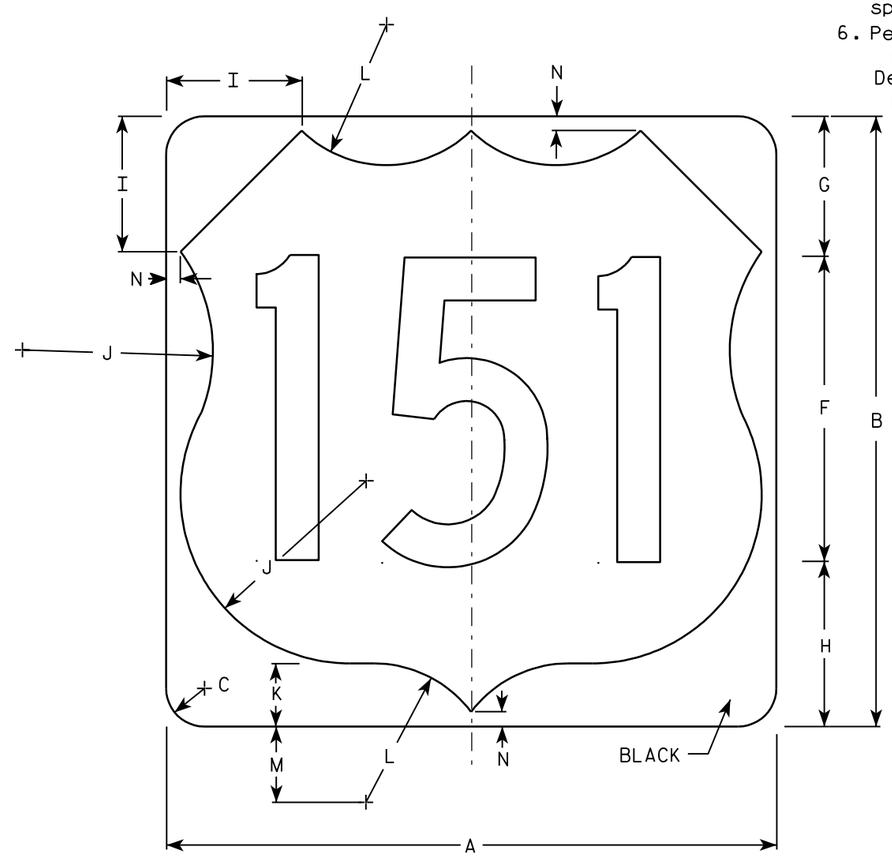

M1-4

Metric equivalent for this sign is:

SIZE	
1	
2	600 mm X 600 mm
3	900 mm X 900 mm
4	900 mm X 900 mm
5	900 mm X 900 mm

SIZE	A	B	C	D	E	F	G	H	I	J	K	L	M	N	O	P	Q	R	S	T	U	V	W	X	Y	Z	Area sq. ft.	Area m2
1																												
2	24	24	1 1/2			12	5 1/2	6 1/2	5	7 1/2	2 1/2	5 1/2	3	1/2													4.0	.36
3	36	36	2 1/4			18	8 1/4	9 1/4	7 1/4	11 1/4	3 3/4	8 1/4	4 1/2	3/4													9.0	.81
4	36	36	2 1/4			18	8 1/4	9 1/4	7 1/4	11 1/4	3 3/4	8 1/4	4 1/2	3/4													9.0	.81
5	36	36	2 1/4			18	8 1/4	9 1/4	7 1/4	11 1/4	3 3/4	8 1/4	4 1/2	3/4													9.0	.81

USH MARKER
M1-4 FOR ASSEMBLIES

WISCONSIN DEPT OF TRANSPORTATION

APPROVED Matthew R Rauch
for State Traffic Engineer

DATE 08/25/05 PLATE NO. M1-4.9

PROJECT NO: | HWY: | COUNTY: | SHEET NO: 184 | E

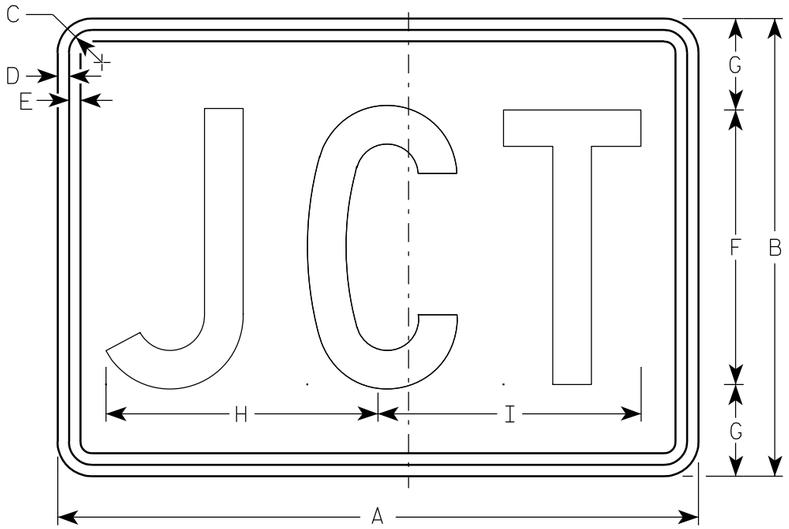

M2-1
MK2-1
MM2-1
MR2-1

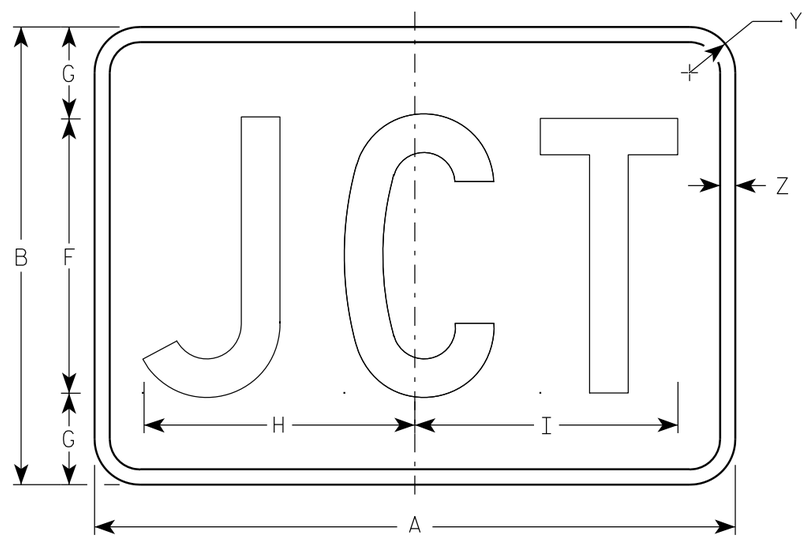

MB2-1
MG2-1
MN2-1

NOTES

1. Sign is Type II - See Note 5 - reference WIS DOT Standard Specification for HIGHWAY and STRUCTURE CONSTRUCTION latest edition.
2. Color:
   Background - See note 5
   Message - See note 5
3. Message Series - C
4. Corners may be square or rounded when base material is plywood but borders shall be rounded as shown. When base material is metal, the corners and borders shall be rounded.
5. M2-1 Background - White - Type H Reflective
   (Detour or temporary Signs - Reflective)
   Message - Black
   MB2-1 Background - Blue
   Message - White - Type H Reflective
   (Detour or temporary Signs - Reflective)
   MG2-1 Background - Green
   Message - White - Type H Reflective
   MK2-1 Background - Green
   Message - White - Type H Reflective
   MM2-1 Background - White - Type H Reflective
   Message - Green
   MN2-1 Background - Brown
   Message - White - Type H Reflective
   MR2-1 Background - Brown
   Message - Yellow - Type H Reflective

7

7

Metric equivalent for this sign is:

SIZE	
1	
2	525 mm X 375 mm
3	750 mm X 525 mm
4	750 mm X 525 mm
5	750 mm X 525 mm

SIZE	A	B	C	D	E	F	G	H	I	J	K	L	M	N	O	P	Q	R	S	T	U	V	W	X	Y	Z	Area sq. ft.	Area m2
1																												
2	21	15	1 1/8	3/8	3/8	9	3	8 7/8	8 5/8																1 1/2	1/2	2.20	0.20
3	30	21	1 1/8	3/8	3/8	13	4	12 7/8	12 3/8																1 1/2	1/2	4.40	0.20
4	30	21	1 1/8	3/8	3/8	13	4	12 7/8	12 3/8																1 1/2	1/2	4.40	0.20
5	30	21	1 1/8	3/8	3/8	13	4	12 7/8	12 3/8																1 1/2	1/2	4.40	0.20

STANDARD SIGN
M2-1

WISCONSIN DEPT OF TRANSPORTATION

APPROVED Matthew R Rauch
for State Traffic Engineer

DATE 3/16/10 PLATE NO. M2-1.10

PROJECT NO: | HWY: | COUNTY: | SHEET NO: 185 | E

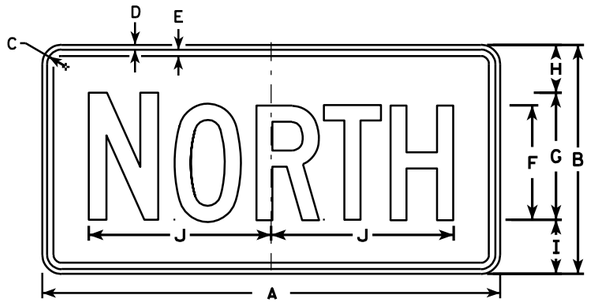

M3-1
MK3-1
MO3-1

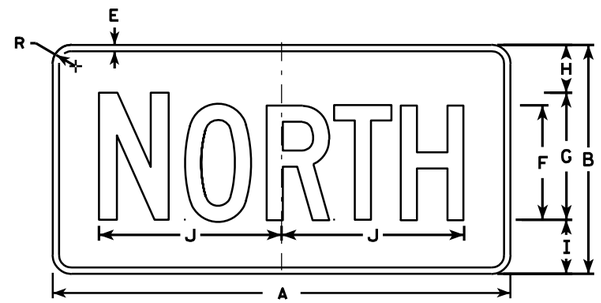

MB3-1
MG3-1
MM3-1
MN3-1

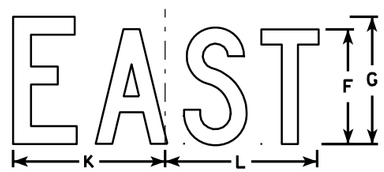

M3-2
MK3-2
MO3-2

MB3-2
MG3-2
MM3-2
MN3-2

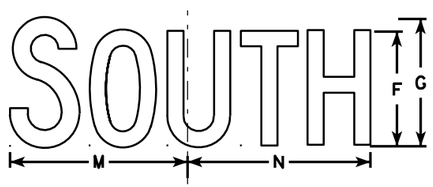

M3-3
MK3-3
MO3-3

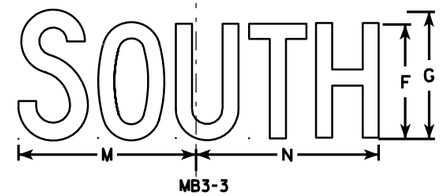

MB3-3
MG3-3
MM3-3
MN3-3

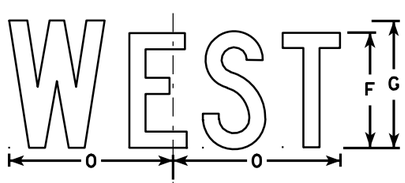

M3-4
MK3-4
MO3-4

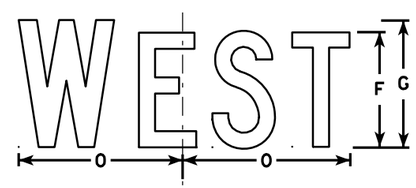

MB3-4
MG3-4
MM3-4
MN3-4

NOTES

1. All Signs Type II - See Note 5 - reference WIS DOT Standard Specification for HIGHWAY and STRUCTURE CONSTRUCTION latest edition.
2. Color:
   Background - See note 5
   Message - See note 5
3. Message Series - C
4. Corners may be square or rounded when base material is plywood but borders shall be rounded as shown. When base material is metal, the corners and borders shall be rounded.
5. M3-1 thru M3-4 Background - White - Type H Reflective
   (Detour or temporary signs - Reflective)
   Message - Black
   MB3-1 thru MB3-4 Background - Blue
   Message - White - Type H Reflective
   (Detour or temporary signs - Reflective)
   MG3-1 thru MG3-4 Background - Green
   Message - White - Type H Reflective
   MK3-1 thru MK3-4 Background - Green
   Message - White - Type H Reflective
   MM3-1 thru MM3-4 Background - White - Type H Reflective
   Message - Green
   MN3-1 thru MN3-4 Background - Brown
   Message - White - Type H Reflective
   MO3-1 thru MO3-4 Background - Orange - Reflective
   Message - Black
6. Note the first letter of each direction is larger than the remainder of the message.

SIZE	A	B	C	D	E	F	G	H	I	J	K	L	M	N	O	P	Q	R	S	T	U	V	W	X	Y	Z	Area sq. ft.
1																											
2	24	12	1 1/8	3/8	3/8	6	7	2 1/4	2 3/4	10 1/4	7 7/8	8 3/8	10 1/4	9 3/4	8 3/4			1 1/2									2.00
3	36	18	1 1/8	3/8	1/2	9	10	3 3/4	4 1/4	14 3/8	12	12 1/8	14	14 1/8	13			1 1/2									4.5
4	36	18	1 1/8	3/8	1/2	9	10	3 3/4	4 1/4	14 3/8	12	12 1/8	14	14 1/8	13			1 1/2									4.5
5	36	18	1 1/8	3/8	1/2	9	10	3 3/4	4 1/4	14 3/8	12	12 1/8	14	14 1/8	13			1 1/2									4.5

STANDARD SIGNS
M3-1 thur M3-4
SERIES

WISCONSIN DEPT OF TRANSPORTATION

APPROVED Matthew R Rauch
for State Traffic Engineer

DATE 11/10/10 PLATE NO. M3-1.12

PROJECT NO: | HWY: | COUNTY: | SHEET NO: 186 | E

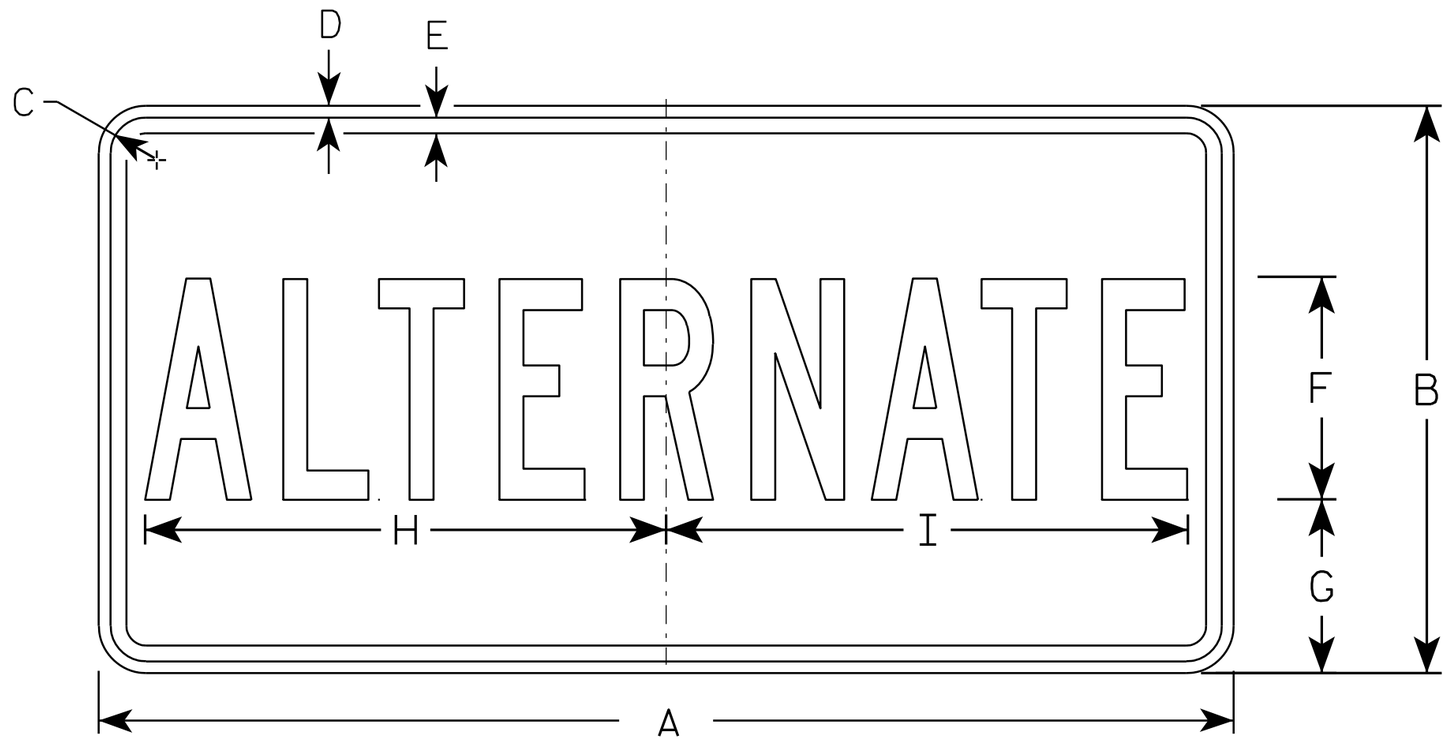

M4 - 1

NOTES

1. Sign is Type II - See Note 5 - reference WIS DOT Standard Specification for HIGHWAY and STRUCTURE CONSTRUCTION latest edition.
2. Color:
   Background - See Note 5
   Message - See note 5
3. Message Series - B
4. Corners may be square or rounded when base material is plywood but borders shall be rounded as shown. When base material is metal, the corners and borders shall be rounded.
5. M4-1 Background - White - Type H Reflective
   Message - Black

   MB4-1 Background - Blue
   Message - White - Type H Reflective

   M04-1 Background - Orange - Reflective
   Message - Black

SIZE	A	B	C	D	E	F	G	H	I	J	K	L	M	N	O	P	Q	R	S	T	U	V	W	X	Y	Z	Area sq. ft.
1																											
2	24	12	1 1/2	3/8	3/8	4	4	9 3/4	9 1/2																		2.00
3	36	18	1 1/2	3/8	1/2	7	5 1/2	16 3/8	16 1/2																		4.5
4	36	18	1 1/2	3/8	1/2	7	5 1/2	16 3/8	16 1/2																		4.5
5	36	18	1 1/2	3/8	1/2	7	5 1/2	16 3/8	16 1/2																		4.5

STANDARD SIGN
M4 - 1

WISCONSIN DEPT OF TRANSPORTATION

APPROVED Matthew R Rauch
for State Traffic Engineer

DATE 11/10/10 PLATE NO. M4-1.7

PROJECT NO: | HWY: | COUNTY: | SHEET NO: 187 | E

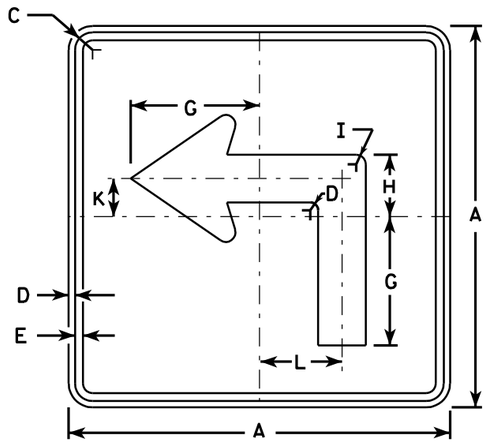

M5-1L
MK5-1L
MM5-1L
MO5-1L
MR5-1L

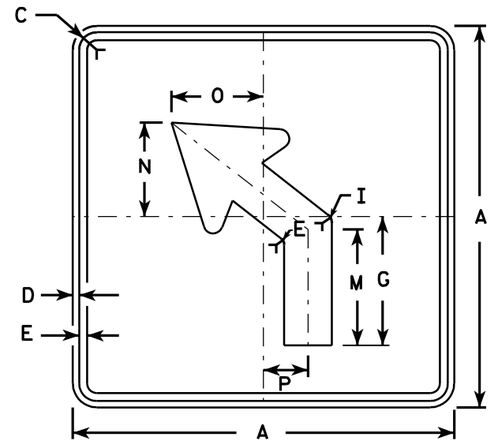

M5-2L
MK5-2L
MM5-2L
MO5-2L
MR5-2L

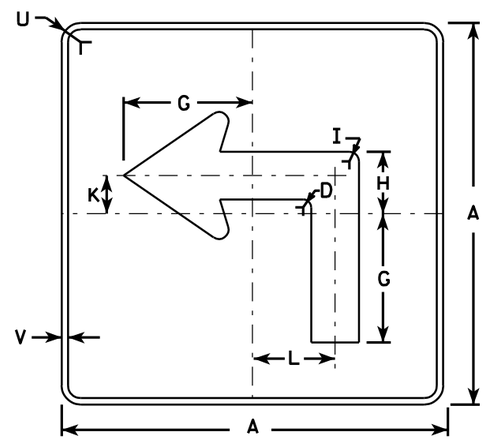

MB5-1L
MG5-1L
MN5-1L

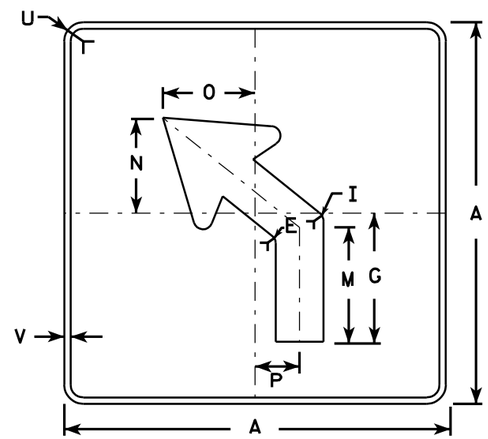

MB5-2L
MG5-2L
MN5-2L

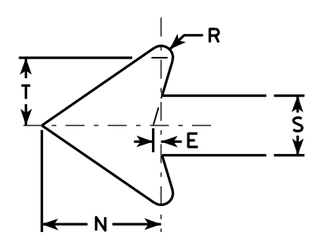

NOTES

1. Signs are Type II - See Note 4 - reference WIS DOT Standard Specification for HIGHWAY and STRUCTURE CONSTRUCTION latest edition.
2. Color:
   Background - See note 4
   Message - See note 4
3. Corners may be square or rounded when base material is plywood but borders shall be rounded as shown. When base material is metal, the corners and borders shall be rounded.
4. M5-1 and M5-2 Background - White - Type H Reflective (Detour or temporary Signs - Reflective) Message - Black
   MB5-1 and MB5-2 Background - Blue Message - White - Type H Reflective (Detour or temporary Signs - Reflective)
   MG5-1 and MG5-2 Background - Green Message - White - Type H Reflective
   MK5-1 and MK5-2 Background - Green Message - White Type H Reflective
   MM5-1 and MM5-2 Background - White - Type H Reflective Message - Green
   MN5-1 and MN5-2 Background - Brown Message - White - Type H Reflective
   MO5-1 and MO5-2 Background - Orange - Reflective Message - Black
   MR5-1 and MR5-2 Background - Brown Message - Yellow - Type H Reflective
5. M5-1R same as M5-1L except arrow points right.
6. M5-2R same as M5-2L except arrow tilts right.

Metric equivalent for this sign is:

SIZE	
1	
2	525 mm X 525 mm
3	750 mm X 750 mm
4	750 mm X 750 mm
5	750 mm X 750 mm

SIZE	A	B	C	D	E	F	G	H	I	J	K	L	M	N	O	P	Q	R	S	T	U	V	W	X	Y	Z	Area sq. ft.	Area m²
1																												
2	21		1 1/8	3/8	3/8		7	3 3/8	5/8		2 1/8	4 1/2	6 3/8	5 1/4	5	2 1/2		1/2	2 5/8	3	1 1/2	1/2					3.06	0.28
3	30		1 3/8	1/2	5/8		10 1/8	4 7/8	7/8		3	6 1/2	9 1/8	7 1/2	7 1/4	3 1/2		3/4	3 3/4	4 1/4	1 7/8	1/2					6.25	0.56
4	30		1 3/8	1/2	5/8		10 1/8	4 7/8	7/8		3	6 1/2	9 1/8	7 1/2	7 1/4	3 1/2		3/4	3 3/4	4 1/4	1 7/8	1/2					6.25	0.56
5	30		1 3/8	1/2	5/8		10 1/8	4 7/8	7/8		3	6 1/2	9 1/8	7 1/2	7 1/4	3 1/2		3/4	3 3/4	4 1/4	1 7/8	1/2					6.25	0.56

STANDARD SIGN
M5-1 & M5-2

WISCONSIN DEPT OF TRANSPORTATION

APPROVED Matthew R Rauch
for State Traffic Engineer

DATE 3/16/10 PLATE NO. M5-1.11

PROJECT NO: | HWY: | COUNTY: | SHEET NO: 188 | E

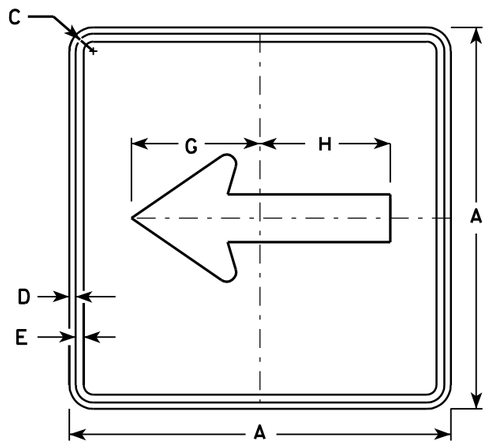

M6-1
MK6-1
MM6-1
MO6-1
MR6-1

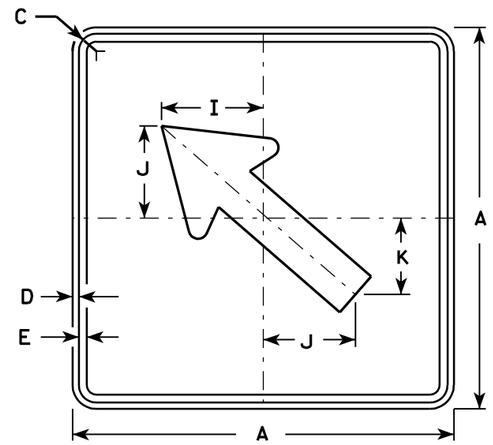

M6-2
MK6-2
MM6-2
MO6-2
MR6-2

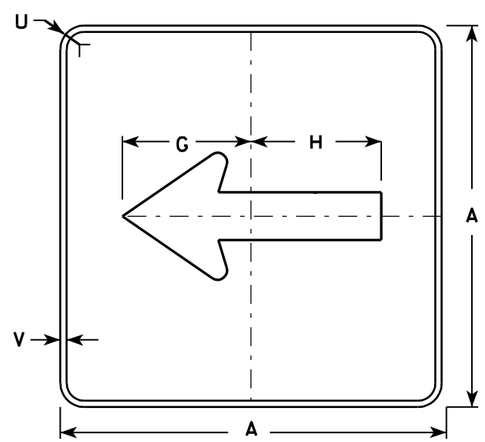

MB6-1
MG6-1
MN6-1

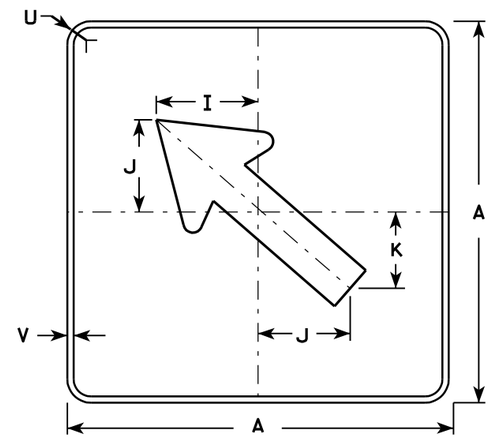

MB6-2
MG6-2
MN6-2

NOTES

1. Signs are Type II - See Note 4 - reference WIS DOT Standard Specification for HIGHWAY and STRUCTURE CONSTRUCTION latest edition.
2. Color:
   Background - See note 4
   Message - See note 4
3. Corners may be square or rounded when base material is plywood but borders shall be rounded as shown. When base material is metal, the corners and borders shall be rounded.
4. M6-1 and M6-2 Background - White - Type H Reflective
   (Detour or temporary Signs - Reflective)
   Message - Black
   MB6-1 and MB6-2 Background - Blue
   Message - White - Type H Reflective
   (Detour or temporary Signs - Reflective)
   MG6-1 and MG6-2 Background - Green
   Message - White - Type H Reflective
   MK6-1 and MK6-2 Background - Green
   Message - White - Type H Reflective
   MM6-1 and MM6-2 Background - White - Type H Reflective
   Message - Green
   MN6-1 and MN6-2 Background - Brown
   Message - White - Type H Reflective
   MO6-1 and MO6-2 Background - Orange - Reflective
   Message - Black
   MR6-1 and MR6-2 Background - Brown
   Message - Yellow - Type H Reflective

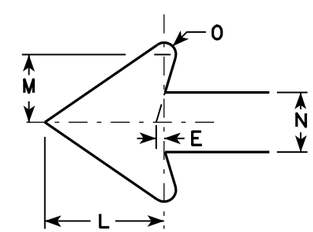

Metric equivalent for this sign is:

SIZE	
1	
2	525 mm X 525 mm
3	750 mm X 750 mm
4	750 mm X 750 mm
5	750 mm X 750 mm

SIZE	A	B	C	D	E	F	G	H	I	J	K	L	M	N	O	P	Q	R	S	T	U	V	W	X	Y	Z	Area sq. ft.	Area m2
1																												
2	21		1 1/8	3/8	3/8		7 1/2	7 1/8	5 5/8	5	4 1/4	5 1/4	3	2 5/8	1/2						1 1/2	1/2					3.06	0.28
3	30		1 3/8	1/2	5/8		10 3/4	10 1/4	8	7 1/4	6	7 1/2	4 1/4	3 3/4	3/4						1 7/8	1/2					6.25	0.56
4	30		1 3/8	1/2	5/8		10 3/4	10 1/4	8	7 1/4	6	7 1/2	4 1/4	3 3/4	3/4						1 7/8	1/2					6.25	0.56
5	30		1 3/8	1/2	5/8		10 3/4	10 1/4	8	7 1/4	6	7 1/2	4 1/4	3 3/4	3/4						1 7/8	1/2					6.25	0.56

STANDARD SIGN
M6-1 & M6-2
SERIES

WISCONSIN DEPT OF TRANSPORTATION

APPROVED Matthew R Rauch
for State Traffic Engineer

DATE 3/16/10 PLATE NO. M6-1.12

PROJECT NO:	HWY:	COUNTY:		SHEET NO: 189	E

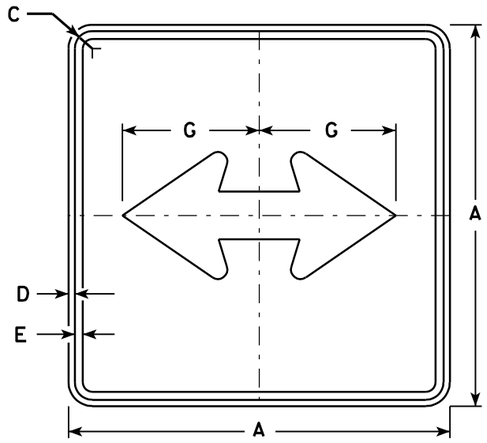

M6-4
MK6-4
MM6-4
MO6-4
MR6-4

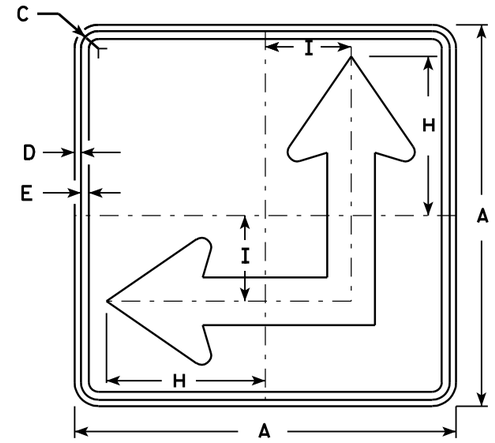

M6-6
MK6-6
MM6-6
MO6-6
MR6-6

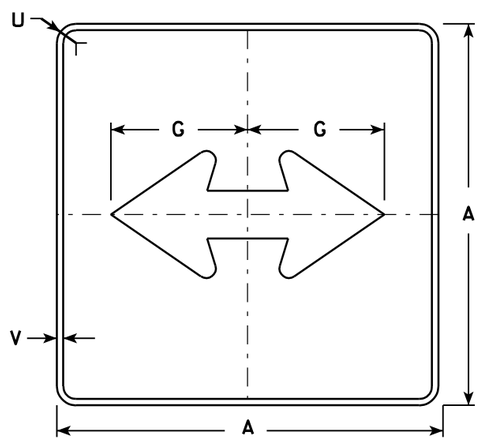

MB6-4
MG6-4
MN6-4

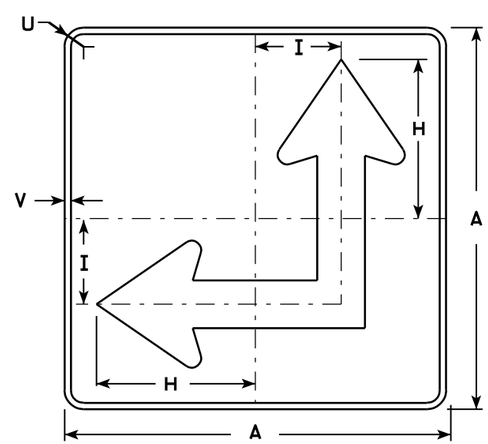

MB6-6
MG6-6
MN6-6

NOTES

1. Signs are Type II - See Note 4 - reference WIS DOT Standard Specification for HIGHWAY and STRUCTURE CONSTRUCTION latest edition.
2. Color:
   Background - See Note 4
   Message - See Note 4
3. Corners may be square or rounded when base material is plywood but borders shall be rounded as shown. When base material is metal, the corners and borders shall be rounded.
4. M6-4 and M6-6 Background - White - Type H Reflective (Detour or temporary Signs - Reflective)
   Message - Black
   MB6-4 and MB6-6 Background - Blue
   Message - White - Type H Reflective (Detour or temporary Signs - Reflective)
   MG6-4 and MG6-6 Background - Green
   Message - White - Type H Reflective
   MK6-4 and MK6-6 Background - Green
   Message - White - Type H Reflective
   MM6-4 and MM6-6 Background - White - Type H Reflective
   Message - Green
   MN6-4 and MN6-6 Background - Brown
   Message - White - Type H Reflective
   MO6-4 and MO6-6 Background - Orange - Reflective
   Message - Black
   MR6-4 and MR6-6 Background - Brown
   Message - Yellow - Type H Reflective
5. M6-6R same as M6-6L except arrow points ahead and right.

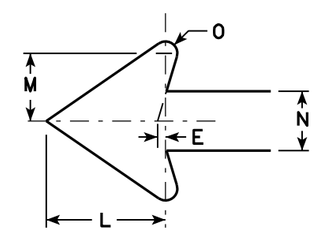

Metric equivalent for this sign is:

SIZE	
1	
2	525 mm X 525 mm
3	750 mm X 750 mm
4	750 mm X 750 mm
5	750 mm X 750 mm

SIZE	A	B	C	D	E	F	G	H	I	J	K	L	M	N	O	P	Q	R	S	T	U	V	W	X	Y	Z	Area sq. ft.	Area m2
1																												
2	21		1 1/8	3/8	3/8		7 1/2	8 3/4	4 1/4			5 1/4	3	2 5/8	1/2						1 1/2	1/2					3.06	0.28
3	30		1 3/8	1/2	5/8		10 3/4	12 1/2	6 3/4			7 1/2	4 1/4	3 3/4	3/4						1 7/8	1/2					6.25	0.56
4	30		1 3/8	1/2	5/8		10 3/4	12 1/2	6 3/4			7 1/2	4 1/4	3 3/4	3/4						1 7/8	1/2					6.25	0.56
5	30		1 3/8	1/2	5/8		10 3/4	12 1/2	6 3/4			7 1/2	4 1/4	3 3/4	3/4						1 7/8	1/2					6.25	0.56

STANDARD SIGN
M6-4 & M6-6
SERIES

WISCONSIN DEPT OF TRANSPORTATION

APPROVED Matthew R Rauch for State Traffic Engineer

DATE 3/16/10 PLATE NO. M6-4.7

PROJECT NO:	HWY:	COUNTY:		SHEET NO: 190	E

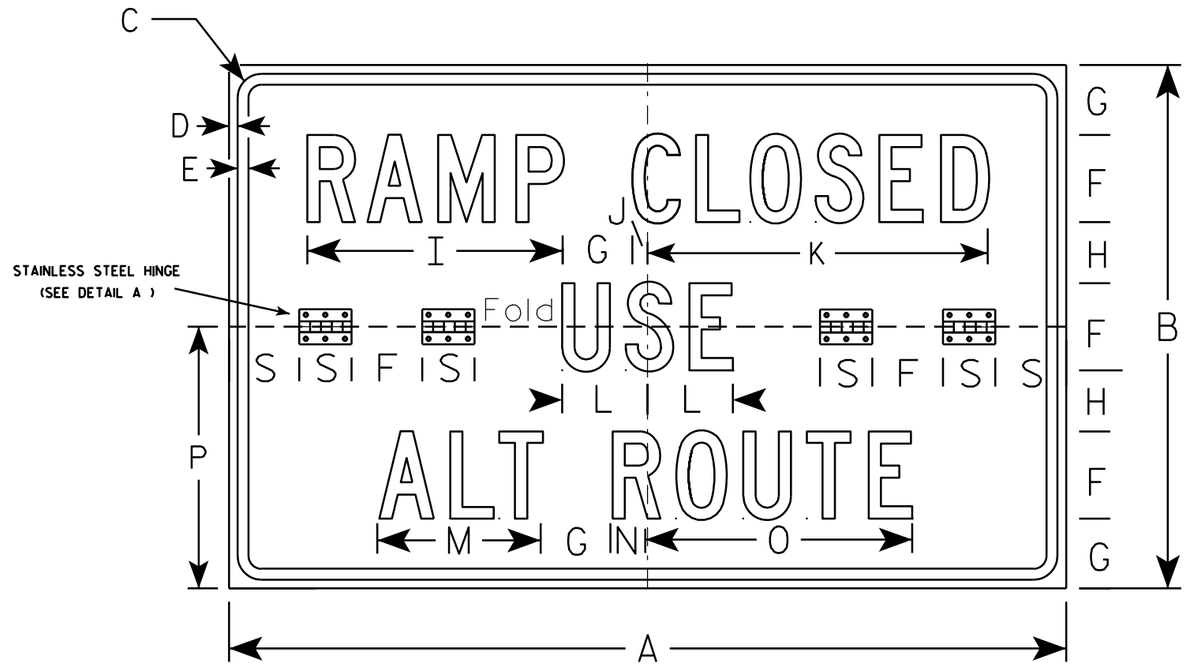

R11-54F

NOTES

1. Sign is Type II - Type H Reflective - reference WIS DOT Standard Specification for HIGHWAY and STRUCTURE CONSTRUCTION latest edition.
2. Color:
   Background - WHITE
   Message - BLACK
3. Message Series - C
4. Sign Base Material shall be aluminum corners and borders shall be rounded.
5. All hardware used on the folding sign installation shall conform to 637.2.4 of the WIS DOT Standard Specification.

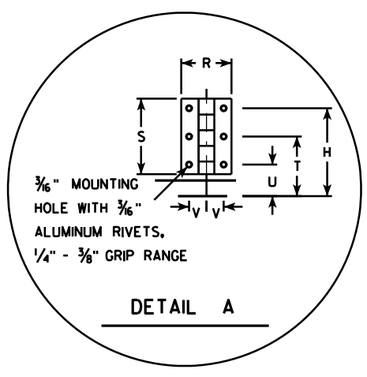

DETAIL A

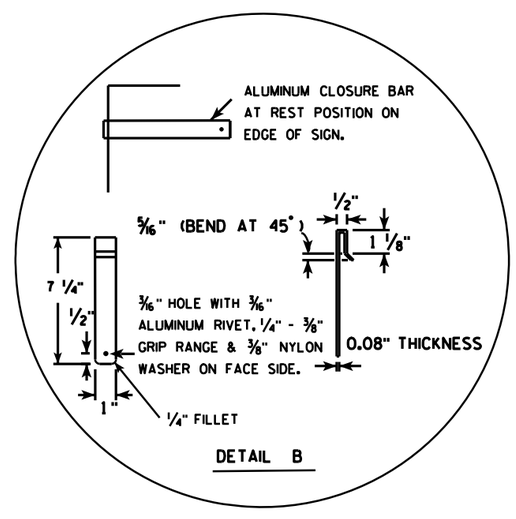

DETAIL B

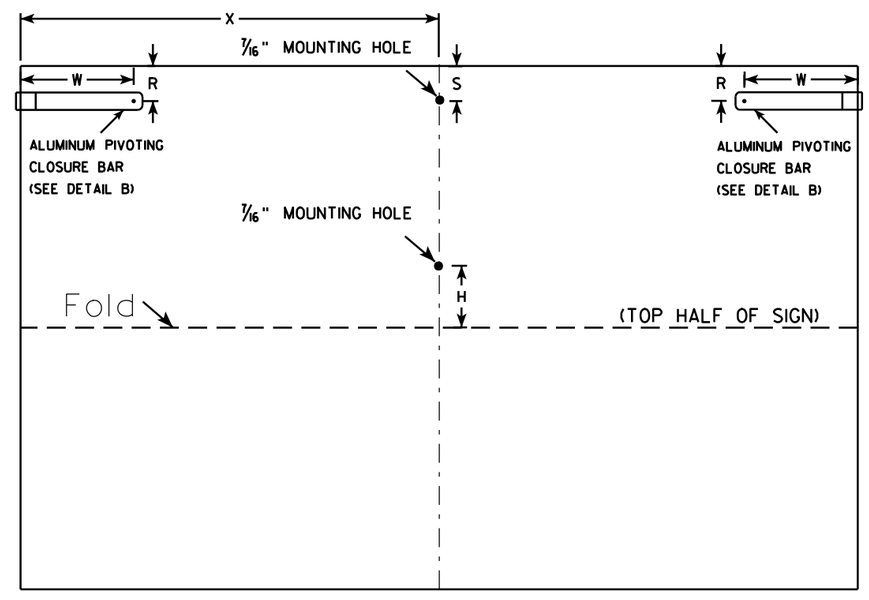

(BACK VIEW)

SIZE	A	B	C	D	E	F	G	H	I	J	K	L	M	N	O	P	Q	R	S	T	U	V	W	X	Y	Z	Area sq. ft.
1																											
2S	48	30	1 3/8	1/2	5/8	5	4	3 1/2	14 5/8	7/8	19 1/2	4 7/8	9 3/8	2	15 1/4	15		2	3	2 5/8	1 1/4	11/16	6 1/2	24			10.0
2M	48	30	1 3/8	1/2	5/8	5	4	3 1/2	14 5/8	7/8	19 1/2	4 7/8	9 3/8	2	15 1/4	15		2	3	2 5/8	1 1/4	11/16	6 1/2	24			10.0
3																											
4																											
5																											

STANDARD SIGN
R11-54F

WISCONSIN DEPT OF TRANSPORTATION

APPROVED Matthew R Rauch
for State Traffic Engineer

DATE 4/1/11 PLATE NO. R11-54F.2

PROJECT NO:	HWY:	COUNTY:		SHEET NO: 191	E

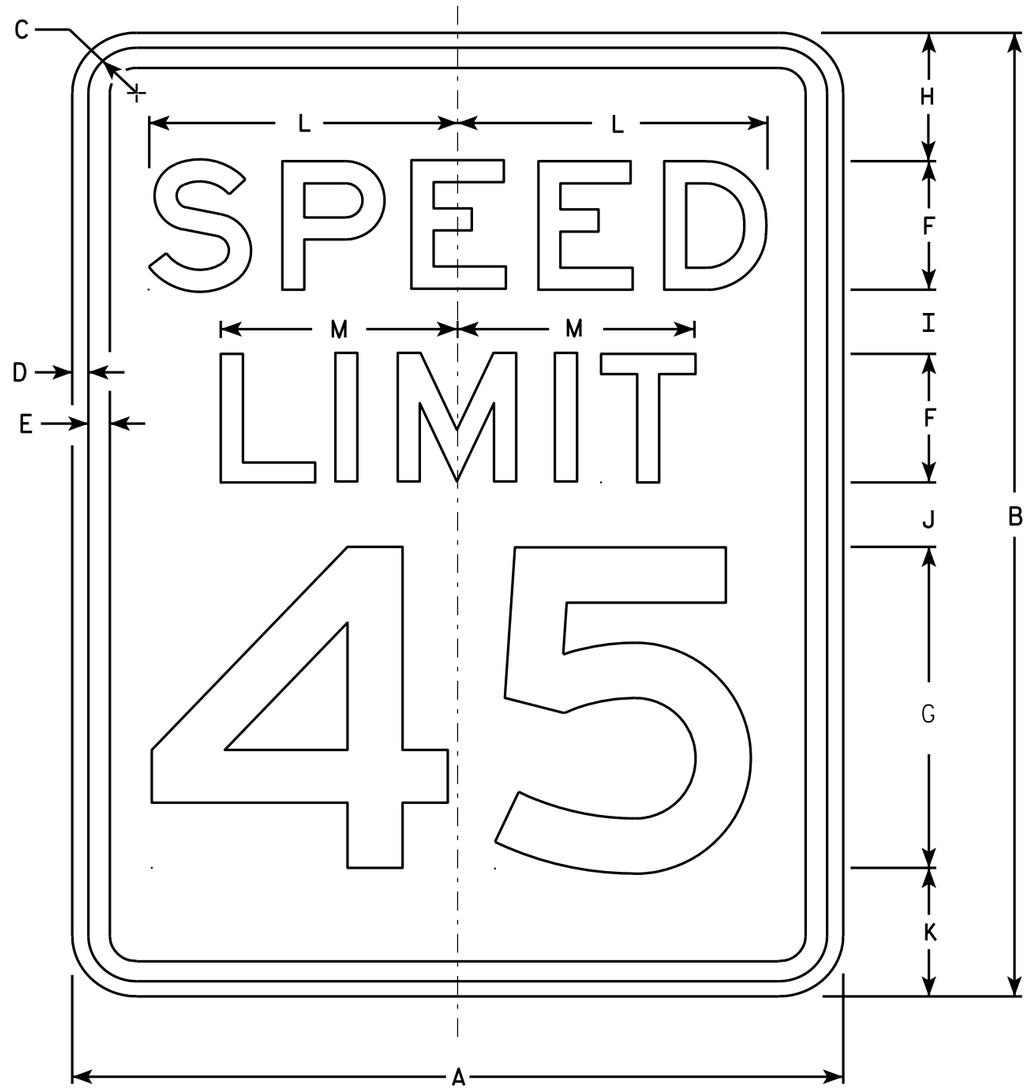

R2-1

NOTES

1. Sign is Type II - Type H Reflective - reference WIS DOT Standard Specification for HIGHWAY and STRUCTURE CONSTRUCTION latest edition.
2. Color:
   Background - White
   Message - Black
3. Message Series - E
4. Corners may be square or rounded when base material is plywood but borders shall be rounded as shown. When base material is metal, the corners and borders shall be rounded.
5. Substitute appropriate numerals and optically adjust spacing to achieve proper balance.

SIZE	A	B	C	D	E	F	G	H	I	J	K	L	M	N	O	P	Q	R	S	T	U	V	W	X	Y	Z	Area sq. ft.
1	18	24	1 1/8	3/8	1/2	3	8	3	2	2	3	7 1/4	5 1/2														3.0
2S	24	30	1 1/8	3/8	1/2	4	10	3	2 1/4	3 3/8	3 3/8	9 5/8	7 3/8														5.0
2M	30	36	1 3/8	1/2	5/8	5	12	5	2 1/2	2 1/2	4	12	9 1/4														7.5
3	36	48	1 3/8	1/2	5/8	6	14	6	5	5	6	14 3/8	11														12.0
4	36	48	1 3/8	1/2	5/8	6	14	6	5	5	6	14 3/8	11														12.0
5	48	60	2 1/4	3/4	1	8	20	6	4 1/2	6 3/4	6 3/4	19 1/4	14 5/8														20.0

STANDARD SIGN
R2-1

WISCONSIN DEPT OF TRANSPORTATION

APPROVED Matthew R Rauch
for State Traffic Engineer

DATE 5/26/10 PLATE NO. R2-1.13

PROJECT NO: | HWY: | COUNTY: | SHEET NO: 192 | E

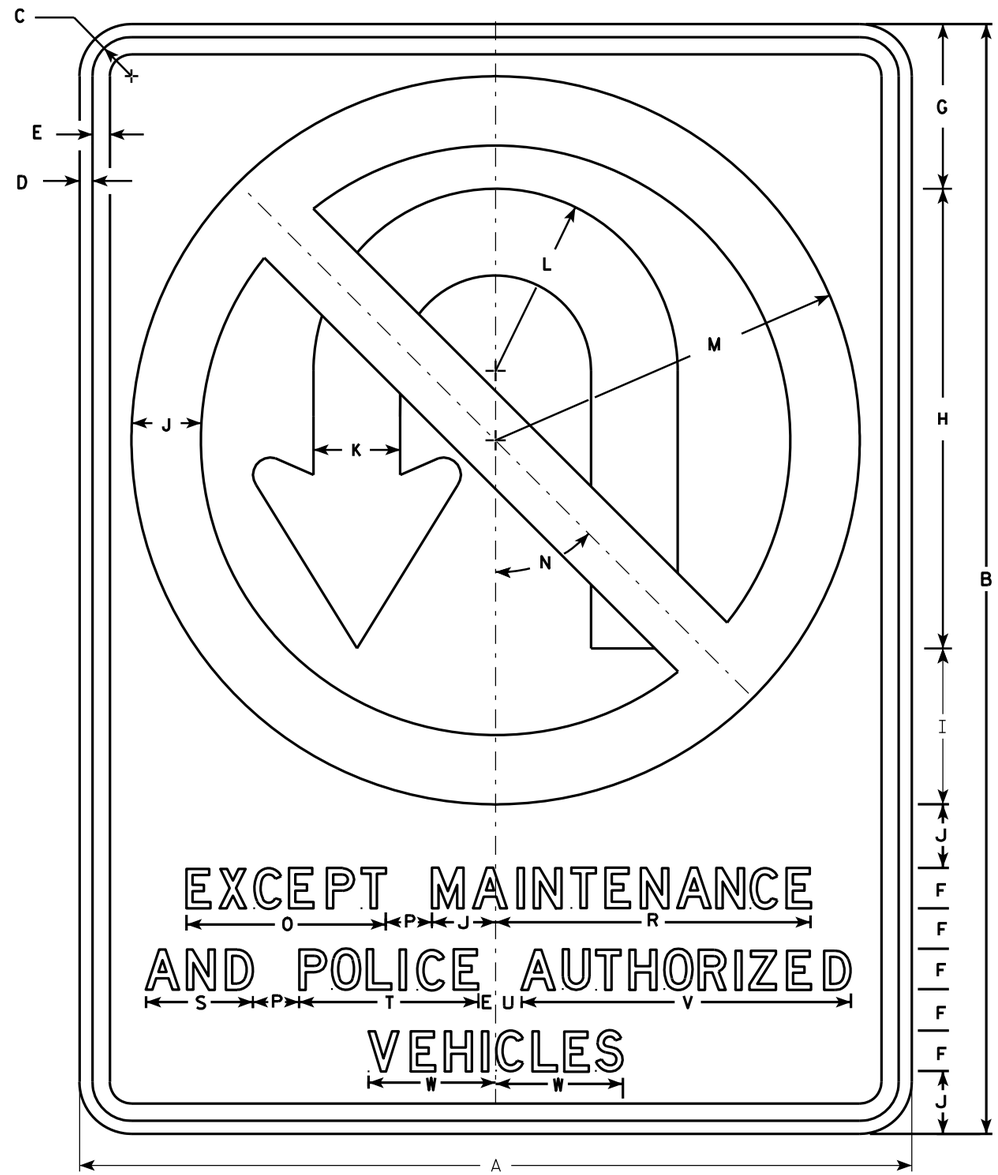

R3-4B

NOTES

1. Sign is Type II - Type H Reflective - reference WIS DOT Standard Specification for HIGHWAY and STRUCTURE CONSTRUCTION latest edition.
2. Color:
   Background - White
   Message - See note 4
3. Corners may be square or rounded when base material is plywood but borders shall be rounded as shown. When base material is metal, the corners and borders shall be rounded.
4. Border & Arrow are non reflective black, the circle with diagonal bar is reflective red.

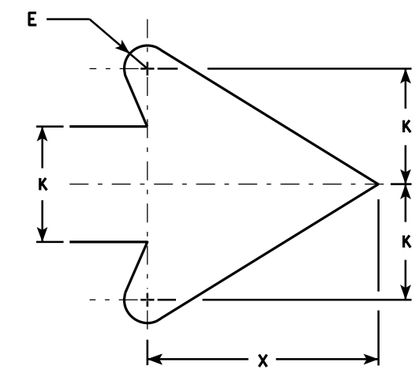

ARROW DETAIL

SIZE	A	B	C	D	E	F	G	H	I	J	K	L	M	N	O	P	Q	R	S	T	U	V	W	X	Y	Z	Area sq. ft.
1																											
2S																											
2M																											
3																											
4	36	48	1 5/8	5/8	3/4	1 3/4	7 1/8	19 7/8	6 3/4	2 3/4	3 3/4	7 7/8	15 3/4	45°	8 5/8	2		13 5/8	4 5/8	7 3/4	1 1/8	14 1/4	5 1/2	7 5/8			12.0
5	36	48	1 5/8	5/8	3/4	1 3/4	7 1/8	19 7/8	6 3/4	2 3/4	3 3/4	7 7/8	15 3/4	45°	8 5/8	2		13 5/8	4 5/8	7 3/4	1 1/8	14 1/4	5 1/2	7 5/8			12.0

STANDARD SIGN
R3-4B

WISCONSIN DEPT OF TRANSPORTATION

APPROVED Matthew R Rauch
for State Traffic Engineer

DATE 3/17/2011 PLATE NO. R3-4B.2

PROJECT NO: | HWY: | COUNTY: | SHEET NO: 193 | E

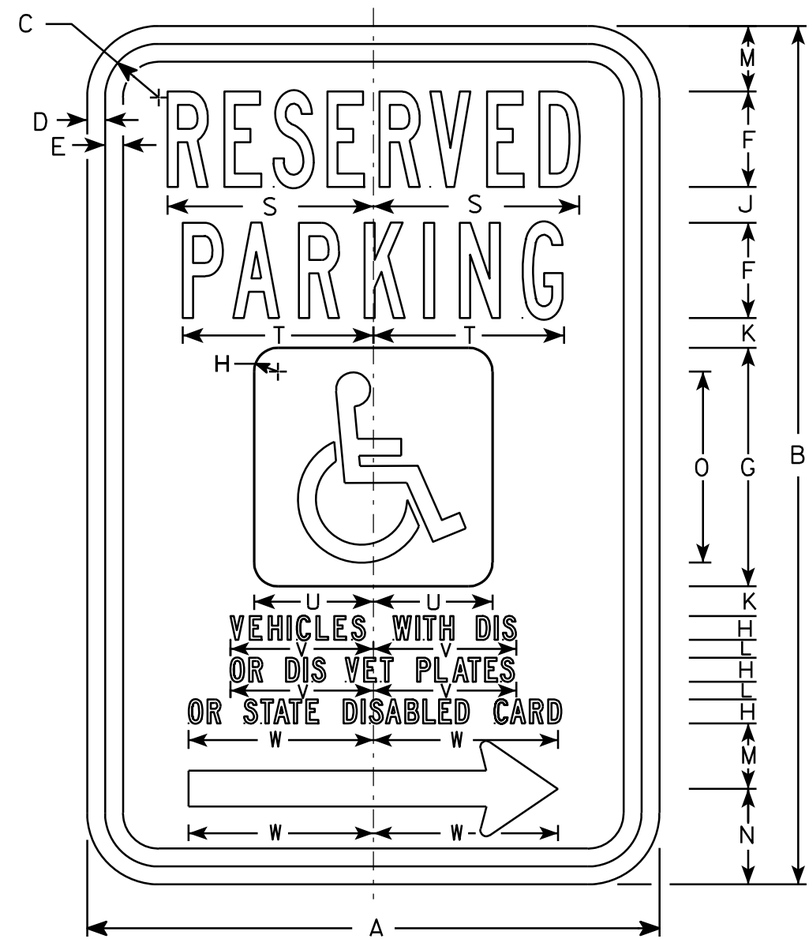

R7-8R

NOTES

1. Sign is Type II - Type H Reflective - reference WIS DOT Standard Specification for HIGHWAY and STRUCTURE CONSTRUCTION latest edition.
2. Color:
   Background - Sign is white Type H Reflective; paraplegic background is blue.
   Message - Legend and border are green; paraplegic symbol is white
3. Message Series - Lines 1 & 2 are Series B
   Lines 3, 4, 5 & 6 are Series C
4. Corners may be square or rounded when base material is plywood but borders shall be rounded as shown. When base material is metal, the corners and borders shall be rounded.
5. R7-8R (RIGHT ARROW)
   R7-8L (LEFT ARROW)

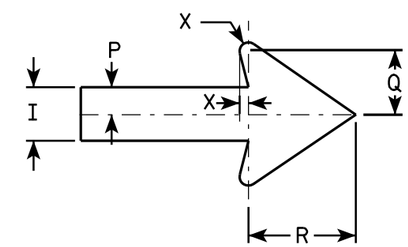

Arrow Detail

SIZE	A	B	C	D	E	F	G	H	I	J	K	L	M	N	O	P	Q	R	S	T	U	V	W	X	Y	Z	Area sq. ft.
1																											
2S	12	18	1 1/8	3/8	3/8	2	5	1/2	3/4	3/4	5/8	3/8	1 3/8	2	4	3/8	7/8	1 1/2	4 3/8	4	2 1/2	3	3 7/8	3/16			1.5
2M	18	24	1 1/8	3/8	1/2	3	6	3/4	1 1/8	7/8	5/8	1/2	1 7/8	2 7/8	5	5/8	1 3/8	2 1/4	6 1/2	5 3/8	3	4 1/2	5 7/8	1/8			3.0
3	18	24	1 1/8	3/8	1/2	3	6	3/4	1 1/8	7/8	5/8	1/2	1 7/8	2 7/8	5	5/8	1 3/8	2 1/4	6 1/2	5 3/8	3	4 1/2	5 7/8	1/8			3.0
4																											
5																											

STANDARD SIGN
R7-8

WISCONSIN DEPT OF TRANSPORTATION

APPROVED Matthew R Rauch
for State Traffic Engineer

DATE 3/31/2011 PLATE NO. R7-8.6

PROJECT NO:	HWY:	COUNTY:		SHEET NO: 194	E

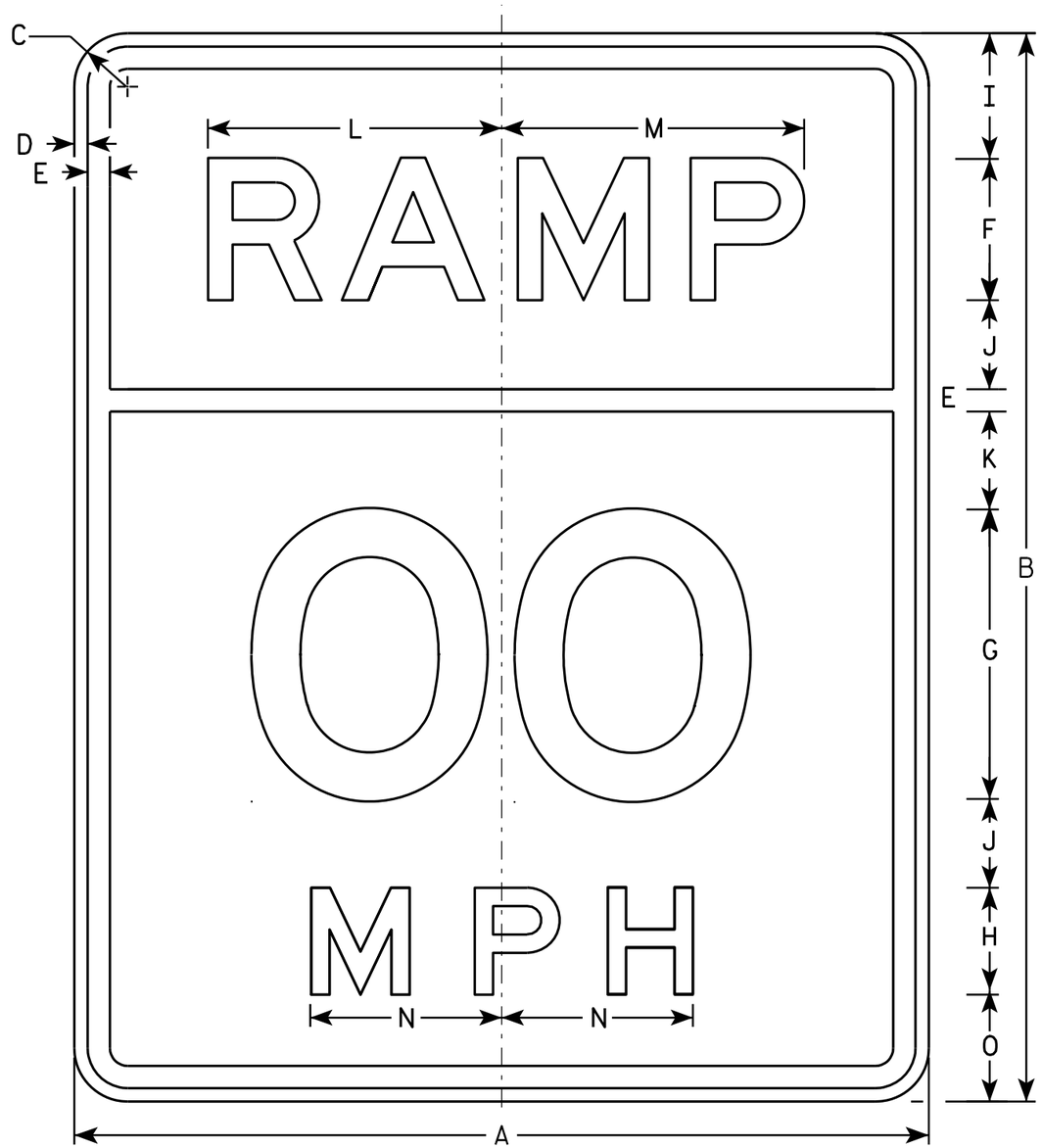

W13-3

NOTES

1. Sign is Type II - Type H Reflective - reference WIS DOT Standard Specification for HIGHWAY and STRUCTURE CONSTRUCTION latest edition.
2. Color:
   Background - Yellow
   Message - Black
3. Message Series - E
4. Corners may be square or rounded when base material is plywood but borders shall be rounded as shown. When base material is metal, the corners and borders shall be rounded.
5. Substitute appropriate numerals and optically space about centerline to achieve proper balance.

SIZE	A	B	C	D	E	F	G	H	I	J	K	L	M	N	O	P	Q	R	S	T	U	V	W	X	Y	Z	Area sq. ft.
1	24	30	1 1/8	3/8	5/8	4	8	3	3 1/2	2 1/2	2 7/8	8 1/4	8 1/2	5 3/8	3												5.0
2S	24	30	1 1/8	3/8	5/8	4	8	3	3 1/2	2 1/2	2 7/8	8 1/4	8 1/2	5 3/8	3												5.0
2M	24	30	1 1/8	3/8	5/8	4	8	3	3 1/2	2 1/2	2 7/8	8 1/4	8 1/2	5 3/8	3												5.0
3																											
4	36	48	1 5/8	5/8	7/8	6	12	4	6	4 1/8	5 1/8	13 1/2	13 5/8	7 1/8	6												12.0
5	48	60	2 1/4	3/4	1 1/4	8	16	6	7	5	5 3/4	16 1/2	17	10 5/8	6												20.0

STANDARD SIGN
W13-3

WISCONSIN DEPT OF TRANSPORTATION

APPROVED Matthew R Rauch
for State Traffic Engineer

DATE 5/31/12 PLATE NO. W13-3.8

PROJECT NO: | HWY: | COUNTY: | SHEET NO: 195 | E

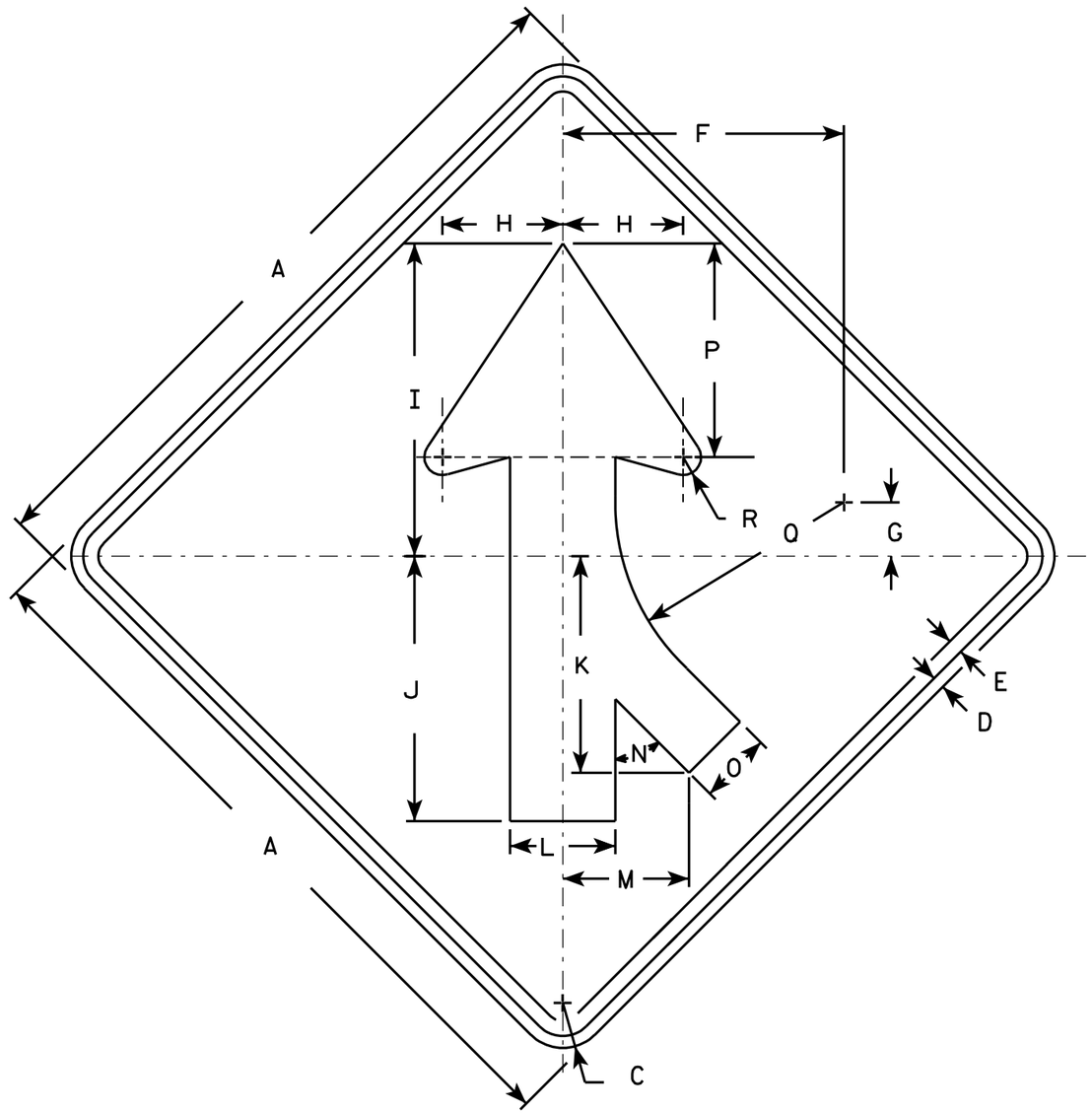

W4-1 R

NOTES

1. Sign is Type II - Type H Reflective - reference WIS DOT Standard Specification for HIGHWAY and STRUCTURE CONSTRUCTION latest edition.
2. Color:
   Background - Yellow
   Message - Black
3. Corners may be square or rounded when base material is plywood but borders shall be rounded as shown. When base material is metal, the corners and borders shall be rounded.
4. W4-1L is the same as W4-1R except the arrow is reversed along the vertical centerline.

SIZE	A	B	C	D	E	F	G	H	I	J	K	L	M	N	O	P	Q	R	S	T	U	V	W	X	Y	Z	Area sq. ft.
1	30		1 3/8	1/2	5/8	11 5/8	2 1/2	5	13	11	9	4 3/8	5 1/4	45°	3	8 7/8	9 1/2	3/4									6.25
2S	36		1 5/8	5/8	3/4	14	2 3/4	6	15 3/4	13 1/4	10 1/4	5 1/4	6 3/8	45°	3 5/8	10 5/8	11 3/8	7/8									9.0
2M	36		1 5/8	5/8	3/4	14	2 3/4	6	15 3/4	13 1/4	10 1/4	5 1/4	6 3/8	45°	3 5/8	10 5/8	11 3/8	7/8									9.0
3	36		1 5/8	5/8	3/4	14	2 3/4	6	15 3/4	13 1/4	10 1/4	5 1/4	6 3/8	45°	3 5/8	10 5/8	11 3/8	7/8									9.0
4	48		2 1/4	3/4	1	18 3/4	3 5/8	8	20 1/2	17 1/2	14 3/8	7	8 3/8	45°	4 3/4	14 1/4	15 1/4	1 1/4									16.0
5	48		2 1/4	3/4	1	18 3/4	3 5/8	8	20 1/2	17 1/2	14 3/8	7	8 3/8	45°	4 3/4	14 1/4	15 1/4	1 1/4									16.0

STANDARD SIGN
W4-1

WISCONSIN DEPT OF TRANSPORTATION

APPROVED Matthew R Rauch for State Traffic Engineer

DATE 3/21/11 PLATE NO. W4-1.13

PROJECT NO:	HWY:	COUNTY:		SHEET NO: 196	E

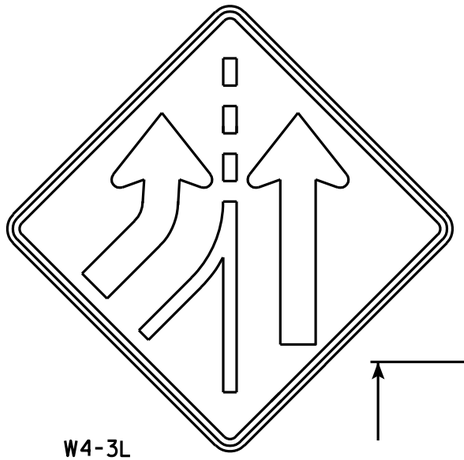

W4-3L

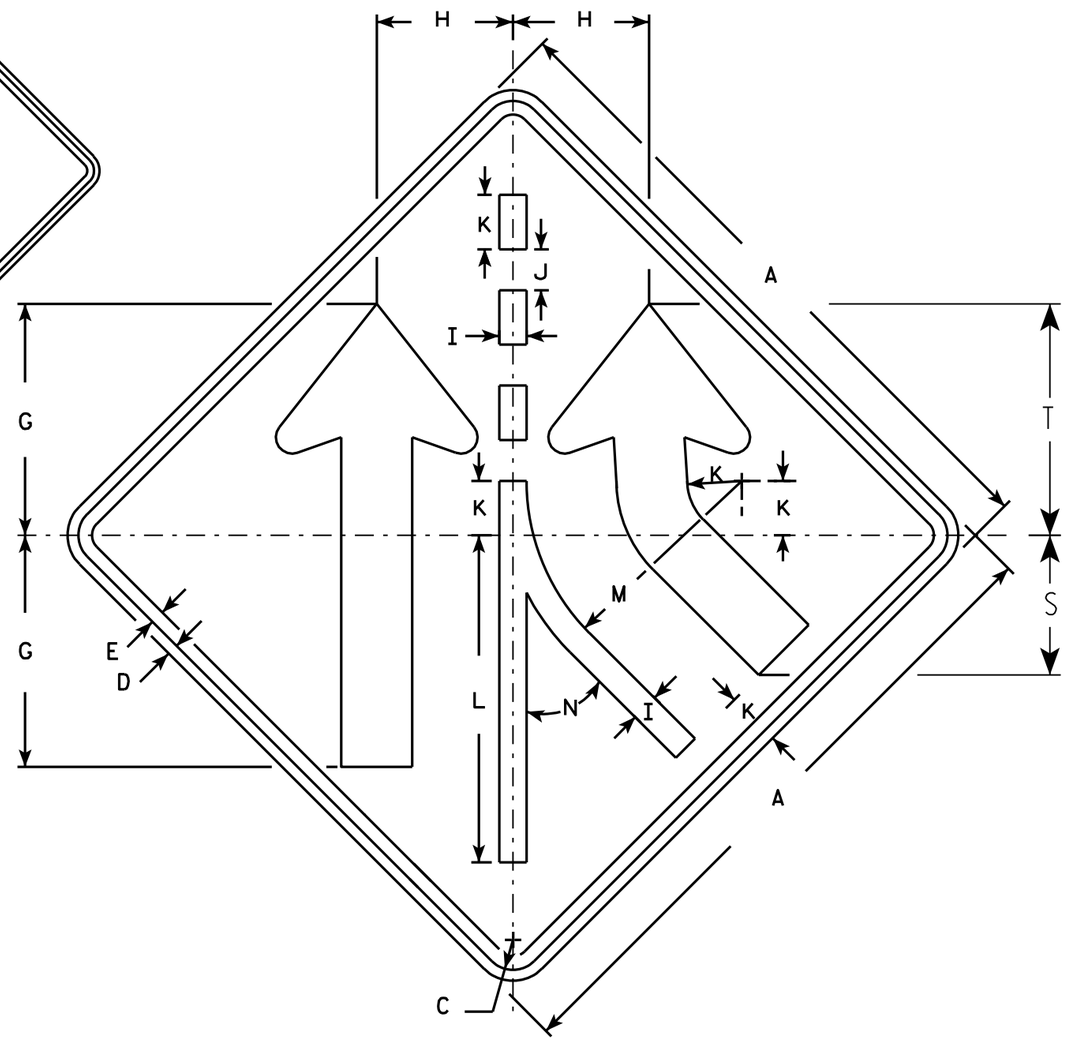

W4-3R

NOTES

1. Sign is Type II - Type H Reflective - reference WIS DOT Standard Specification for HIGHWAY and STRUCTURE CONSTRUCTION latest edition.
2. Color:
   Background - Yellow
   Message - Black
3. Corners may be square or rounded when base material is plywood but borders shall be rounded as shown. When base material is metal, the corners and borders shall be rounded.
4. W4-3 L is the same as W4-3 R except the arrow is reversed along the vertical centerline.

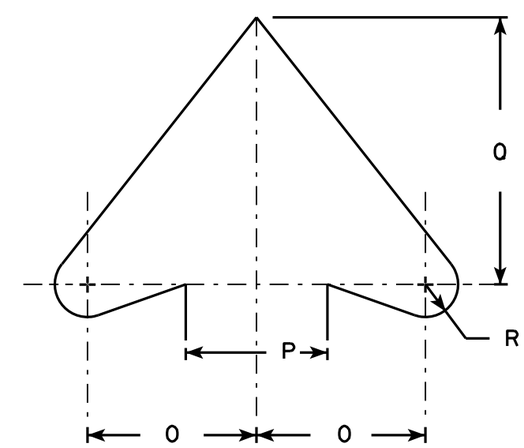

ARROW DETAIL

SIZE	A	B	C	D	E	F	G	H	I	J	K	L	M	N	O	P	Q	R	S	T	U	V	W	X	Y	Z	Area sq. ft.
1	30		1 3/8	1/2	5/8		10 5/8	6 1/4	1 1/4	1 7/8	2 1/2	15	9 7/8	45°	3 7/8	3 1/4	6 1/8	3/4	6 3/8	10 5/8							6.25
2S	36		1 5/8	5/8	3/4		12 3/4	7 1/2	1 1/2	2 1/4	3	18	11 7/8	45°	4 5/8	4	7 3/8	7/8	7 3/4	12 3/4							9.0
2M	36		1 5/8	5/8	3/4		12 3/4	7 1/2	1 1/2	2 1/4	3	18	11 7/8	45°	4 5/8	4	7 3/8	7/8	7 3/4	12 3/4							9.0
3																											
4	48		2 1/4	3/4	1		17	10	2	3	4	24	15 3/4	45°	6 1/4	5 1/2	9 7/8	1 1/4	10 1/4	17							16.0
5	48		2 1/4	3/4	1		17	10	2	3	4	24	15 3/4	45°	6 1/4	5 1/2	9 7/8	1 1/4	10 1/4	17							16.0

STANDARD SIGN
W4-3

WISCONSIN DEPT OF TRANSPORTATION

APPROVED Matthew R Rauch
for State Traffic Engineer
DATE 3/21/11 PLATE NO. W4-3.7

PROJECT NO:

SHEET NO: 197 E

EB-LINE EARTHWORK

STATION	AREA		Incremental Vol		Cumulative Vol		Mass Ordinate (CY)
	Cut (SF)	Fill (SF)	Cut (CY)	Fill (CY)	Cut (CY)	Fill (CY)	
200+00.00	0	0	0	0	0	0	0
201+00.00	0	0	0	0	0	0	0
202+00.00	0	0	0	0	0	0	0
203+00.00	0	0	0	0	0	0	0
204+00.00	0	0	0	0	0	0	0
205+00.00	0	0	0	0	0	0	0
206+00.00	0	0	0	0	0	0	0
207+00.00	0	0	0	0	0	0	0
208+00.00	0	0	0	0	0	0	0
209+00.00	2	4	4	8	4	8	-4
210+00.00	28	1	56	10	60	18	43
211+00.00	36	5	119	11	179	29	151
212+00.00	39	17	139	40	318	69	250
213+00.00	42	16	150	62	468	130	338
214+00.00	48	19	166	66	634	197	437
215+00.00	49	11	179	57	813	253	560
216+00.00	6	4	102	27	915	281	634
217+00.00	0	25	12	53	926	334	592
218+00.00	1	0	2	47	929	381	548
219+00.00	0	0	2	0	931	381	550
220+00.00	0	0	0	0	931	381	550
221+00.00	0	0	0	0	931	381	550
222+00.00	0	0	0	0	931	381	550
223+00.00	0	0	0	0	931	381	550
224+00.00	0	0	0	0	931	381	550
225+00.00	0	0	0	0	931	381	550
231+00.00	0	0	0	0	931	381	550
232+00.00	0	0	0	0	931	381	550
233+00.00	0	0	0	0	931	381	550
234+00.00	0	0	0	0	931	381	550
235+00.00	0	0	0	0	931	381	550
236+00.00	0	0	0	0	931	381	550
237+00.00	0	0	0	0	931	381	550
238+00.00	1	0	2	0	933	381	552
239+00.00	18	0	35	0	968	381	588
240+00.00	17	0	64	0	1032	381	651
241+00.00	9	0	49	0	1081	381	700
242+00.00	5	0	27	0	1108	381	727
243+00.00	0	0	10	0	1118	381	737
244+00.00	0	0	1	0	1118	381	738
245+00.00	0	2	1	3	1119	384	735
246+00.00	0	5	0	12	1119	396	723
247+00.00	0	2	0	12	1119	408	711
248+00.00	0	0	0	3	1119	411	708
249+00.00	0	0	0	0	1119	411	708
250+00.00	0	0	0	0	1119	411	708
251+00.00	0	0	0	0	1119	411	708
252+00.00	0	0	0	0	1119	411	708
253+00.00	0	0	0	0	1119	411	708
254+00.00	0	0	0	0	1119	411	708
255+00.00	0	0	0	0	1119	411	708
256+00.00	0	0	0	0	1119	411	708
257+00.00	0	0	0	0	1119	411	708
258+00.00	0	0	0	0	1119	411	708
260+00.00	0	5	0	18	1119	429	690
261+00.00	0	5	0	19	1119	448	670
262+00.00	0	4	0	17	1119	465	653
263+00.00	0	0	0	7	1119	472	646
264+00.00	0	0	0	0	1119	472	646
265+00.00	0	0	0	0	1119	472	646
266+00.00	0	0	0	0	1119	472	646
267+00.00	0	0	0	0	1119	472	646
268+00.00	0	0	0	0	1119	472	646
269+00.00	0	0	0	0	1119	472	646
270+00.00	0	0	0	0	1119	472	646
271+00.00	0	0	0	0	1119	472	646
272+00.00	0	4	1	8	1119	480	639
273+00.00	2	6	4	18	1124	499	625
274+00.00	4	14	10	36	1134	535	599
275+00.00	3	3	12	32	1146	567	579
276+00.00	0	7	5	19	1151	586	565
277+00.00	0	4	1	21	1152	607	545
278+00.00	6	1	12	9	1164	617	547
279+00.00	4	2	19	5	1183	622	561
280+00.00	5	1	17	5	1200	627	572
281+00.00	0	0	10	2	1210	629	581
282+00.00	0	0	0	0	1210	629	581
283+00.00	0	0	0	0	1210	629	581
284+00.00	0	0	0	0	1210	629	581
285+00.00	0	0	0	0	1210	629	581
286+00.00	0	0	0	0	1210	629	581
287+00.00	0	0	0	0	1210	629	581
288+00.00	0	0	0	0	1210	629	581
289+00.00	0	0	0	0	1210	629	581
290+00.00	0	0	0	0	1210	629	581
291+00.00	13	0	23	0	1233	629	604
292+00.00	10	0	41	0	1274	629	645
293+00.00	5	0	26	0	1300	629	671
294+00.00	1	0	10	0	1310	629	681
295+00.00	0	0	1	0	1311	629	682
296+00.00	0	0	0	0	1311	629	682
297+00.00	0	0	0	0	1311	629	682
298+00.00	0	0	0	0	1311	629	682
299+00.00	1	0	1	0	1313	629	684
300+00.00	0	0	1	0	1314	629	685
301+00.00	0	0	0	0	1314	629	685
302+00.00	0	0	1	0	1315	629	686
303+00.00	2	0	4	0	1318	629	689
304+00.00	0	0	3	0	1321	629	692
305+00.00	0	0	0	0	1321	629	692
306+00.00	0	5	0	9	1321	638	683
307+00.00	0	3	0	14	1321	651	670
308+00.00	0	0	0	6	1321	657	664
309+00.00	0	0	0	2	1321	659	663
310+00.00	0	2	0	4	1321	663	658

EB-LINE EARTHWORK - CONTINUED

STATION	AREA		Incremental Vol		Cumulative Vol		Mass Ordinate (CY)
	Cut (SF)	Fill (SF)	Cut (CY)	Fill (CY)	Cut (CY)	Fill (CY)	
311+00.00	0	0	0	4	1321	667	654
312+00.00	0	0	0	1	1321	668	653
313+00.00	0	0	0	0	1321	668	653
314+00.00	0	1	0	2	1321	669	652
315+00.00	0	0	0	2	1321	671	650
316+00.00	0	0	0	1	1321	672	649
317+00.00	0	2	0	5	1321	676	645
318+00.00	0	0	0	4	1321	681	640
319+00.00	0	0	0	0	1321	681	640
320+00.00	0	1	0	2	1321	683	639
321+00.00	0	11	0	22	1321	704	617
322+00.00	0	7	0	33	1321	737	585
323+00.00	0	4	0	19	1321	756	565
324+00.00	0	6	0	18	1321	773	548
325+00.00	0	2	0	14	1321	787	534
326+00.00	0	5	0	12	1321	799	522
327+00.00	0	1	0	10	1321	809	512
328+00.00	0	0	0	1	1321	811	511
329+00.00	0	0	0	0	1321	811	511
330+00.00	0	0	0	0	1321	811	511
331+00.00	0	0	0	0	1321	811	511
332+00.00	0	0	0	0	1321	811	511
333+00.00	0	0	0	0	1321	811	511
334+00.00	0	0	0	0	1321	811	511
335+00.00	0	0	0	0	1321	811	511
336+00.00	0	0	0	0	1322	811	511
337+00.00	2	0	5	0	1327	811	516
338+00.00	1	0	5	0	1332	811	521
339+00.00	0	0	1	0	1333	811	522
340+00.00	0	0	0	1	1333	812	521
341+00.00	0	7	0	14	1333	825	507
342+00.00	0	2	0	17	1333	843	490
343+00.00	0	15	0	32	1333	874	459
344+00.00	0	25	0	74	1333	949	384
345+00.00	0	9	0	64	1333	1013	320
346+00.00	0	13	0	42	1333	1054	279
347+00.00	0	28	0	76	1333	1130	203
348+00.00	0	14	0	77	1333	1207	126
349+00.00	0	9	0	42	1333	1249	83
350+00.00	0	1	0	19	1333	1268	65
351+00.00	0	1	0	4	1333	1272	61
352+00.00	0	1	0	4	1333	1276	57
353+00.00	0	4	0	9	1333	1285	48
354+00.00	0	7	0	20	1333	1305	28
355+00.00	0	8	0	28	1333	1334	-1
356+00.00	0	2	0	18	1333	1351	-18
357+00.00	0	0	0	4	1333	1355	-22
358+00.00	0	3	0	6	1333	1361	-28
359+00.00	0	5	0	15	1333	1377	-44
360+00.00	0	2	0	14	1333	1390	-58
361+00.00	0	4	0	11	1333	1401	-68
362+00.00	0	2	0	10	1333	1411	-78
363+00.00	0	2	0	6	1333	1417	-84
364+00.00	0	0	0	4	1333	1421	-88
365+00.00	0	1	0	2	1333	1423	-90
366+00.00	0	1	0	3	1333	1426	-93
367+00.00	0	2	0	5	1333	1431	-98
368+00.00	0	3	0	10	1333	1441	-108
369+00.00	0	1	0	9	1333	1450	-117
370+00.00	0	5	0	11	1333	1461	-128
371+00.00	0	4	0	17	1333	1478	-145
372+00.00	0	2	0	11	1333	1489	-156
373+00.00	0	10	0	21	1333	1510	-177
374+00.00	0	4	0	25	1333	1535	-202
375+00.00	0	3	0	12	1333	1547	-214
376+00.00	0	3	0	11	1333	1558	-225
377+00.00	0	0	0	6	1333	1564	-231
378+00.00	0	0	0	0	1333	1564	-231
379+00.00	0	0	0	0	1333	1564	-231
380+00.00	0	0	0	0	1333	1564	-231
381+00.00	0	0	0	0	1333	1564	-231
382+00.00	0	0	0	0	1333	1564	-231
383+00.00	0	0	0	0	1333	1564	-231
384+00.00	0	0	0	0	1333	1564	-231
385+00.00	0	0	0	0	1333	1564	-231
386+00.00	0	0	0	0	1333	1564	-231
387+00.00	0	0	0	0	1333	1564	-231
388+00.00	0	0	0	0	1333	1564	-231
389+00.00	0	0	0	0	1333	1564	-231
390+00.00	0	0	0	0	1333	1564	-231
391+00.00	0	0	0	0	1333	1564	-231
392+00.00	0	0	0	0	1333	1564	-231
393+00.00	0	0	0	0	1333	1564	-231
394+00.00	0	0	0	0	1333	1564	-231
395+00.00	0	0	0	0	1333	1564	-231
396+00.00	0	0	0	0	1333	1564	-231
397+00.00	0	0	0	0	1333	1564	-231
398+00.00	0	0	0	0	1333	1564	-231
402+00.00	0	0	0	0	1333	1564	-231
403+00.00	0	0	0	0	1333	1564	-231
404+00.00	0	0	0	0	1333	1564	-231
405+00.00	0	0	0	0	1333	1564	-231
406+00.00	0	0	0	0	1333	1564	-231
407+00.00	0	0	0	0	1333	1564	-231
408+00.00	0	0	0	0	1333	1564	-231
409+00.00	0	0	0	0	1333	1564	-231
410+00.00	0	0	0	0	1333	1564	-231
411+00.00	0	0	0	0	1333	1564	-231
412+00.00	0	0	0	0	1333	1564	-231
413+00.00	0	0	0	0	1333	1564	-231
414+00.00	0	0	0	0	1333	1564	-231
415+00.00	0	0	0	0	1333	1564	-231
416+00.00	0	0	0	0	1333	1564	-231
417+00.00	0	0	0	0	1333	1564	-231
418+00.00	0	0	0	0	1333	1564	-231

EB-LINE EARTHWORK - CONTINUED

STATION	AREA		Incremental Vol		Cumulative Vol		Mass Ordinate
	Cut (SF)	Fill (SF)	Cut (CY)	Fill (CY)	Cut (CY)	Fill (CY)	(CY)
419+00.00	0	0	0	0	1333	1564	-231
420+00.00	0	0	0	0	1333	1564	-231
421+00.00	0	0	0	0	1333	1564	-231
422+00.00	0	0	0	0	1333	1564	-231
423+00.00	0	0	0	0	1333	1564	-231
424+00.00	0	0	0	0	1333	1564	-231
425+00.00	0	0	0	0	1333	1564	-231
426+00.00	0	0	0	0	1333	1564	-231
427+00.00	0	0	0	0	1333	1564	-231
428+00.00	0	0	0	0	1333	1564	-231
429+00.00	0	0	0	0	1333	1564	-231
430+00.00	0	0	0	0	1333	1564	-231
431+00.00	0	0	0	0	1333	1564	-231
432+00.00	0	0	0	0	1333	1564	-231
433+00.00	0	0	0	0	1333	1564	-231
434+00.00	0	0	0	0	1333	1564	-231
435+00.00	0	0	0	0	1333	1564	-231
436+00.00	0	0	0	0	1333	1564	-231
437+00.00	0	0	0	0	1333	1564	-231
438+00.00	0	0	0	0	1333	1564	-231
439+00.00	0	0	0	0	1333	1564	-231
440+00.00	0	0	0	0	1333	1564	-231
441+00.00	0	0	0	0	1333	1564	-231
442+00.00	0	0	0	0	1333	1564	-231
443+00.00	0	0	0	0	1333	1564	-231
444+00.00	0	0	0	0	1333	1564	-231
445+00.00	0	0	0	0	1333	1564	-231
446+00.00	0	0	0	0	1333	1564	-231
448+00.00	0	0	0	0	1333	1564	-231
449+00.00	0	0	0	0	1333	1564	-231
450+00.00	0	0	0	0	1333	1564	-231
451+00.00	0	0	0	0	1333	1564	-231
452+00.00	0	0	0	0	1333	1564	-231
453+00.00	0	0	0	0	1333	1564	-231
454+00.00	0	0	0	0	1333	1564	-231
455+00.00	0	0	0	0	1333	1564	-231
456+00.00	0	0	0	0	1333	1564	-231
457+00.00	0	0	0	0	1333	1564	-231
458+00.00	0	0	0	0	1333	1564	-231
459+00.00	0	0	0	0	1333	1564	-231
462+00.00	0	0	0	0	1333	1564	-231
463+00.00	0	0	0	0	1333	1564	-231
464+00.00	0	0	0	0	1333	1564	-231
465+00.00	0	0	0	0	1333	1564	-231
466+00.00	0	0	0	0	1333	1564	-231
467+00.00	0	0	0	0	1333	1564	-231
468+00.00	0	0	0	0	1333	1564	-231
469+00.00	0	0	0	0	1333	1564	-231
470+00.00	0	0	0	0	1333	1564	-231
471+00.00	0	0	0	0	1333	1564	-231
472+00.00	0	0	0	0	1333	1564	-231
473+00.00	0	0	0	0	1333	1564	-231
474+00.00	0	0	0	0	1333	1564	-231
475+00.00	0	0	0	0	1333	1564	-231
476+00.00	0	0	0	0	1333	1564	-231
477+00.00	0	0	0	0	1333	1564	-231
478+00.00	0	0	0	0	1333	1564	-231
479+00.00	0	0	0	0	1333	1564	-231

Earthwork values **in** table have not been expanded.
Fill Expansion Factor for Common Excavation = 1.30

WB-LINE EARTHWORK

STATION	AREA		Incremental Volume		Cumulative Volume		Mass Ordinate
	Cut (SF)	Fill (SF)	Cut (CY)	Fill (CY)	Cut (CY)	Fill (CY)	(CY)
200+00.00	0	0	0	0	0	0	0
201+00.00	0	0	0	0	0	0	0
202+00.00	0	0	0	0	0	0	0
203+00.00	0	0	0	0	0	0	0
204+00.00	0	0	0	0	0	0	0
205+00.00	0	0	0	0	0	0	0
206+00.00	0	0	0	0	0	0	0
207+00.00	0	0	0	0	0	0	0
208+00.00	0	0	0	0	0	0	0
209+00.00	0	0	0	0	0	0	0
210+00.00	0	1	0	2	0	2	-2
211+00.00	0	2	0	5	0	7	-7
212+00.00	0	0	0	3	0	10	-10
213+00.00	0	0	0	0	0	10	-10
214+00.00	0	0	0	0	0	10	-10
215+00.00	0	0	0	0	0	10	-10
216+00.00	0	0	0	0	0	10	-10
217+00.00	0	0	0	0	0	10	-10
218+00.00	0	0	0	0	0	10	-10
219+00.00	0	0	0	0	0	10	-10
220+00.00	0	0	0	0	0	10	-10
221+00.00	0	0	0	0	0	10	-10
222+00.00	0	0	0	0	0	10	-10
223+00.00	0	0	0	0	0	10	-10
224+00.00	0	0	0	0	0	10	-10
225+00.00	0	0	0	0	0	10	-10
226+00.00	0	0	0	0	0	10	-10
230+00.00	0	0	0	0	0	10	-10
231+00.00	0	0	0	0	0	10	-10
232+00.00	0	0	0	0	0	10	-10
233+00.00	0	0	0	0	0	10	-10
234+00.00	0	0	0	0	0	10	-10
235+00.00	0	0	0	0	0	10	-10
236+00.00	0	0	0	0	0	10	-10
237+00.00	0	0	0	0	0	10	-10
238+00.00	0	0	0	0	0	10	-10
239+00.00	0	0	0	0	0	10	-10
240+00.00	0	0	0	0	0	10	-10
241+00.00	10	1	19	2	20	12	7
242+00.00	32	38	79	71	99	84	15
243+00.00	39	27	132	119	231	203	28
244+00.00	42	12	149	71	380	275	106
245+00.00	32	10	137	41	517	315	202
246+00.00	31	2	118	23	635	338	297
247+00.00	0	1	59	6	694	345	349
248+00.00	0	2	1	6	695	351	344
249+00.00	1	1	2	6	697	357	341
250+00.00	2	1	6	3	703	360	343
251+00.00	1	1	4	4	707	364	344
252+00.00	0	2	1	6	708	370	339
253+00.00	0	3	0	9	708	379	329
254+00.00	1	0	2	6	711	385	326
255+00.00	0	0	2	1	713	386	327
256+00.00	1	1	2	2	715	388	327
257+00.00	1	1	4	4	719	392	327
258+00.00	0	1	2	4	721	396	325
259+00.00	2	0	3	3	724	399	325
260+00.00	3	0	10	2	734	401	333
261+00.00	0	0	5	1	739	402	337
262+00.00	1	1	3	1	742	403	339
263+00.00	2	0	6	1	748	404	344
264+00.00	0	0	3	0	751	404	347
265+00.00	0	0	0	0	751	404	347
266+00.00	0	0	0	0	751	404	347
267+00.00	0	0	0	0	751	404	347
268+00.00	6	1	11	1	762	406	357
269+00.00	4	1	19	2	781	408	373
270+00.00	3	1	12	3	794	411	382
271+00.00	5	1	14	3	807	415	392
272+00.00	2	3	13	6	820	420	400
273+00.00	4	2	12	9	832	430	402
274+00.00	1	2	9	9	841	438	403
275+00.00	3	2	7	8	848	447	401
276+00.00	1	1	7	7	855	453	402
277+00.00	4	0	8	3	863	456	407
278+00.00	0	2	7	4	870	460	410
279+00.00	1	1	2	4	872	464	407
280+00.00	0	0	1	2	873	466	407
281+00.00	3	2	5	4	878	469	408
282+00.00	0	0	5	3	883	473	410
283+00.00	1	0	2	1	885	473	412
284+00.00	1	0	5	2	890	475	415
285+00.00	1	1	4	3	894	478	416
286+00.00	1	2	3	6	898	485	413
287+00.00	0	0	2	4	899	489	410
288+00.00	0	0	0	0	899	489	410
289+00.00	0	0	0	0	899	489	410
290+00.00	0	0	0	0	899	489	410
291+00.00	0	0	0	0	899	489	410
292+00.00	0	0	0	0	899	489	410
293+00.00	0	0	0	0	899	489	410
294+00.00	0	0	0	0	899	489	410
295+00.00	0	0	0	0	899	489	410
296+00.00	0	0	0	0	899	489	410
297+00.00	0	0	0	0	899	489	410
298+00.00	0	0	0	0	899	489	410
299+00.00	0	0	0	0	899	489	410
300+00.00	0	0	0	0	899	489	410
301+00.00	0	0	0	0	899	489	410
302+00.00	0	0	0	0	899	489	410
303+00.00	0	0	0	0	899	489	410
304+00.00	0	0	0	0	899	489	410
305+00.00	0	0	0	0	899	489	410
306+00.00	0	0	0	0	899	489	410
307+00.00	0	3	0	6	899	495	404

WB-LINE EARTHWORK - CONTINUED

STATION	AREA		Incremental Volume		Cumulative Volume		
	Cut (SF)	Fill (SF)	Cut (CY)	Fill (CY)	Cut (CY)	Fill (CY)	Mass Ordinate (CY)
308+00.00	0	4	0	14	899	509	390
309+00.00	0	2	0	10	899	520	380
310+00.00	0	4	0	10	899	530	370
311+00.00	0	1	0	9	899	539	361
312+00.00	0	2	0	5	899	544	355
313+00.00	0	3	0	10	899	554	345
314+00.00	0	3	0	12	899	566	333
315+00.00	0	1	0	8	900	574	325
316+00.00	0	7	0	15	900	589	311
317+00.00	0	7	0	26	900	615	285
318+00.00	0	8	0	28	900	643	256
319+00.00	0	14	0	42	900	685	215
320+00.00	0	0	0	30	900	715	185
321+00.00	0	1	0	2	900	717	183
322+00.00	0	1	0	4	900	721	179
323+00.00	0	3	0	8	900	729	170
324+00.00	0	5	0	15	900	745	155
325+00.00	0	1	0	11	900	756	144
326+00.00	0	6	0	12	900	768	131
327+00.00	0	3	0	16	900	784	116
328+00.00	0	0	0	5	900	789	111
329+00.00	0	0	0	0	900	789	111
330+00.00	0	0	0	0	900	789	111
331+00.00	0	0	0	0	900	789	111
332+00.00	0	0	0	0	900	789	111
333+00.00	0	0	0	0	900	789	111
334+00.00	0	0	0	0	900	789	111
335+00.00	0	0	0	0	900	789	111
336+00.00	0	0	0	0	900	789	111
337+00.00	0	0	0	0	900	789	111
338+00.00	0	0	0	0	900	789	111
339+00.00	0	0	0	0	900	789	111
340+00.00	0	0	0	0	900	789	111
341+00.00	1	0	3	0	902	789	113
342+00.00	1	0	5	0	907	789	118
343+00.00	1	0	4	0	911	789	122
344+00.00	0	1	2	2	913	791	122
345+00.00	0	3	0	8	913	800	113
346+00.00	0	9	0	23	913	822	91
347+00.00	0	9	0	32	913	855	58
348+00.00	0	0	0	16	913	871	42
349+00.00	0	1	0	2	913	873	40
350+00.00	0	1	0	5	913	878	35
351+00.00	0	2	0	6	913	883	30
352+00.00	0	2	0	6	913	889	24
353+00.00	0	2	0	7	913	896	17
354+00.00	0	2	0	6	913	902	11
355+00.00	0	1	0	4	913	907	7
356+00.00	0	1	0	3	913	910	4
357+00.00	0	0	0	1	913	911	2
358+00.00	0	0	0	0	913	911	2
359+00.00	0	0	0	0	913	911	2
360+00.00	0	0	0	0	913	911	2
361+00.00	0	0	0	0	913	911	2
362+00.00	0	0	0	0	913	911	2
363+00.00	0	0	0	0	913	911	2
364+00.00	0	0	0	0	913	911	2
365+00.00	0	0	0	0	913	911	2
366+00.00	0	0	0	0	913	911	2
367+00.00	0	0	0	0	913	911	2
368+00.00	0	0	0	0	913	911	2
369+00.00	0	0	0	0	913	911	2
370+00.00	0	0	0	0	913	911	2
371+00.00	0	0	0	0	913	911	2
372+00.00	0	0	0	0	913	911	2
373+00.00	0	0	0	0	913	911	2
374+00.00	0	0	0	0	913	911	2
375+00.00	0	0	0	0	913	911	2
376+00.00	0	0	0	0	913	911	2
377+00.00	0	0	0	0	913	911	2
378+00.00	0	0	0	0	913	911	2
379+00.00	0	0	0	0	913	911	2
380+00.00	0	0	0	0	913	911	2
381+00.00	0	0	0	0	913	911	2
382+00.00	0	0	0	0	913	911	2
383+00.00	0	0	0	0	913	911	2
384+00.00	0	0	0	0	913	911	2
385+00.00	0	0	0	0	913	911	2
386+00.00	0	0	0	0	913	911	2
387+00.00	0	0	0	0	913	911	2
388+00.00	0	0	0	0	913	911	2
389+00.00	0	0	0	0	913	911	2
390+00.00	0	0	0	0	913	911	2
391+00.00	0	0	0	0	914	911	2
392+00.00	0	0	0	0	914	911	2
393+00.00	0	0	0	0	914	911	2
394+00.00	0	0	0	0	914	911	2
395+00.00	0	0	0	0	914	911	2
396+00.00	0	0	0	0	914	911	2
397+00.00	0	0	0	0	914	911	2
398+00.00	0	0	0	0	914	911	2
402+00.00	0	0	0	0	914	911	2
403+00.00	0	0	0	0	914	911	2
404+00.00	0	0	0	0	914	911	2
405+00.00	0	0	0	0	914	911	2
406+00.00	0	0	0	0	914	911	2
407+00.00	0	0	0	0	914	911	2
408+00.00	0	0	0	0	914	911	2
409+00.00	0	0	0	0	914	911	2
410+00.00	0	0	0	0	914	911	2
411+00.00	0	0	0	0	914	911	2
412+00.00	0	0	0	0	914	912	2
413+00.00	0	0	0	0	914	912	2
414+00.00	0	0	0	0	914	912	2
415+00.00	0	0	0	0	914	912	2

WB-LINE EARTHWORK - CONTINUED

STATION	AREA		Incremental Volume		Cumulative Volume		
	Cut (SF)	Fill (SF)	Cut (CY)	Fill (CY)	Cut (CY)	Fill (CY)	Mass Ordinate (CY)
416+00.00	0	0	0	0	914	912	2
417+00.00	0	0	0	0	914	912	2
418+00.00	0	0	0	0	914	912	2
419+00.00	0	0	0	0	914	912	2
420+00.00	0	0	0	0	914	912	2
421+00.00	0	0	0	0	914	912	2
422+00.00	0	0	0	0	914	912	2
423+00.00	0	0	0	0	914	912	2
424+00.00	0	0	0	0	914	912	2
425+00.00	0	0	0	0	914	912	2
426+00.00	0	0	0	0	914	912	2
427+00.00	0	0	0	0	914	912	2
428+00.00	0	0	0	0	914	912	2
429+00.00	0	0	0	0	914	912	2
430+00.00	0	0	0	0	914	912	2
431+00.00	0	0	0	0	914	912	2
432+00.00	0	0	0	0	914	912	2
433+00.00	0	0	0	0	914	912	2
434+00.00	0	0	0	0	914	912	2
435+00.00	0	0	0	0	914	912	2
436+00.00	0	0	0	0	914	912	2
437+00.00	0	0	0	0	914	912	2
438+00.00	0	0	0	0	914	912	2
439+00.00	0	0	0	0	914	912	2
440+00.00	0	0	0	0	914	912	2
441+00.00	0	0	0	0	914	912	2
442+00.00	0	0	0	0	914	912	2
443+00.00	0	0	0	0	914	912	2
444+00.00	0	0	0	0	914	912	2
445+00.00	0	0	0	0	914	912	2
448+00.00	0	0	0	0	914	912	2
449+00.00	0	0	0	0	914	912	2
450+00.00	0	0	0	0	914	912	2
451+00.00	0	0	0	0	914	912	2
452+00.00	0	0	0	0	914	912	2
453+00.00	0	0	0	0	914	912	2
454+00.00	0	0	0	0	914	912	2
455+00.00	0	0	0	0	914	912	2
456+00.00	0	0	0	0	914	912	2
457+00.00	0	0	0	0	914	912	2
458+00.00	0	0	0	0	914	912	2
459+00.00	0	0	0	0	914	912	2
462+00.00	0	0	0	0	914	912	2
463+00.00	0	0	0	0	914	912	2
464+00.00	0	0	0	0	914	912	2
465+00.00	0	0	0	0	914	912	2
466+00.00	0	0	0	0	914	912	2
467+00.00	0	0	0	0	914	912	2
468+00.00	0	0	0	0	914	912	2
469+00.00	0	0	0	0	914	912	2
470+00.00	0	0	0	0	914	912	2
471+00.00	0	0	0	0	914	912	2
472+00.00	0	0	0	0	914	912	2
473+00.00	0	0	0	0	914	912	2
474+00.00	0	0	0	0	914	912	2
475+00.00	0	0	0	0	914	912	2
476+00.00	0	0	0	0	914	912	2
477+00.00	0	0	0	0	914	912	2
478+00.00	0	0	0	0	914	912	2
479+00.00	0	0	0	0	914	912	2

Earthwork values in table have not been expanded.
Fill Expansion Factor for Common Excavation = 1.30

9

9

PROJECT NO:1010-00-72 | HWY:IH 39 | COUNTY:DANE | EARTHWORK | SHEET | E

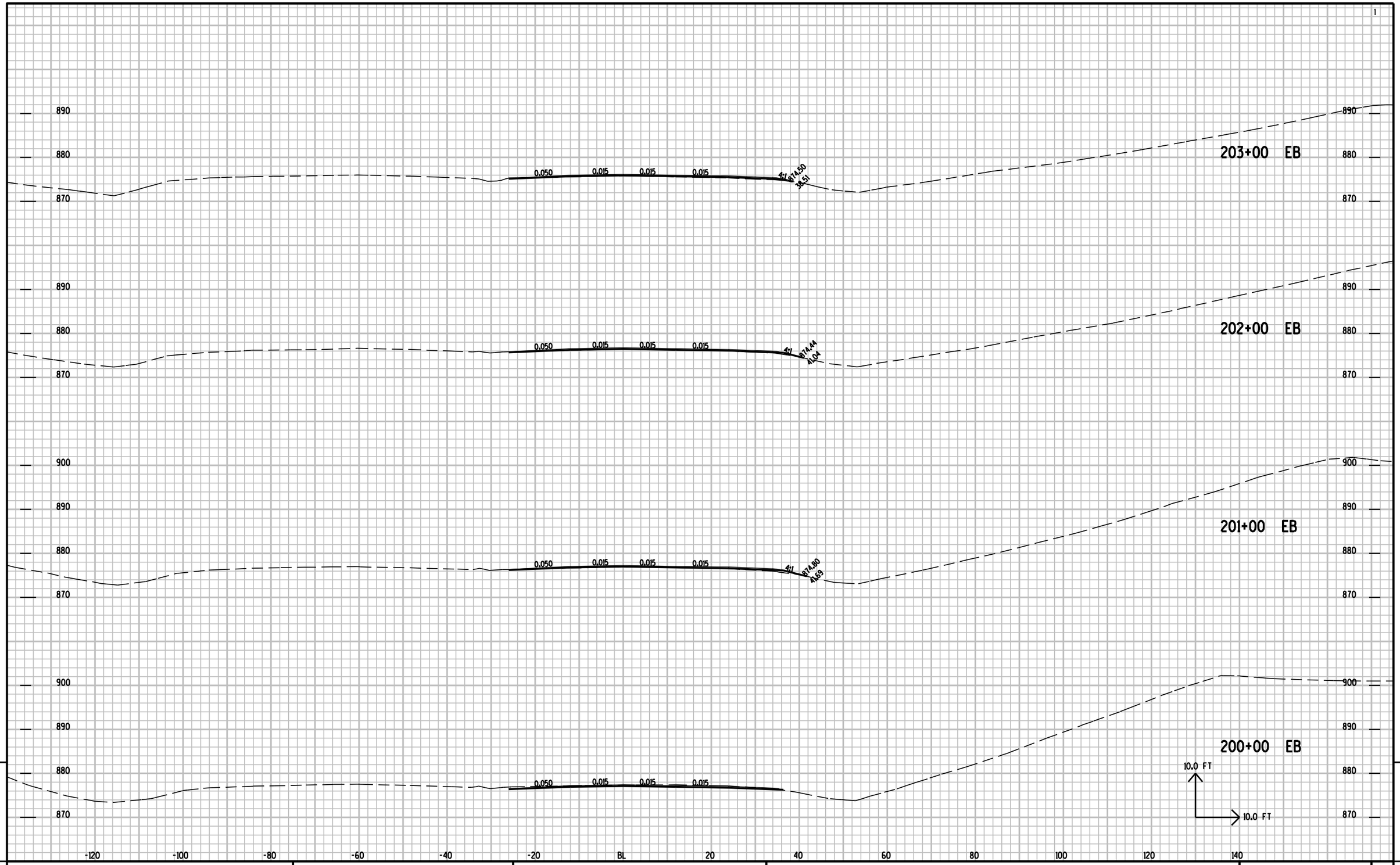

9

PROJECT NO: 1010-00-72	HWY: IH 39	COUNTY: DANE	CROSS SECTIONS: EB LANES	SHEET NO:	E

FILE NAME : r:\Support\CADDS\Projects\d1_10100072\090201_XS.DGN PLOT DATE : 25-APR-2012 10:03 PLOT BY : DOTJ3J PLOT NAME : PLOT SCALE : 2.000000:1.000000

9

9

PROJECT NO: 1010-00-72	HWY: IH 39	COUNTY: DANE	CROSS SECTIONS: EB LANES	SHEET NO:	E

FILE NAME : r:\Support\CADDS\Projects\d1_10100072\090201_XS.DGN PLOT DATE : 25-APR-2012 10:03 PLOT BY : DOTJ3J PLOT NAME : PLOT SCALE : 2.000000:1.000000

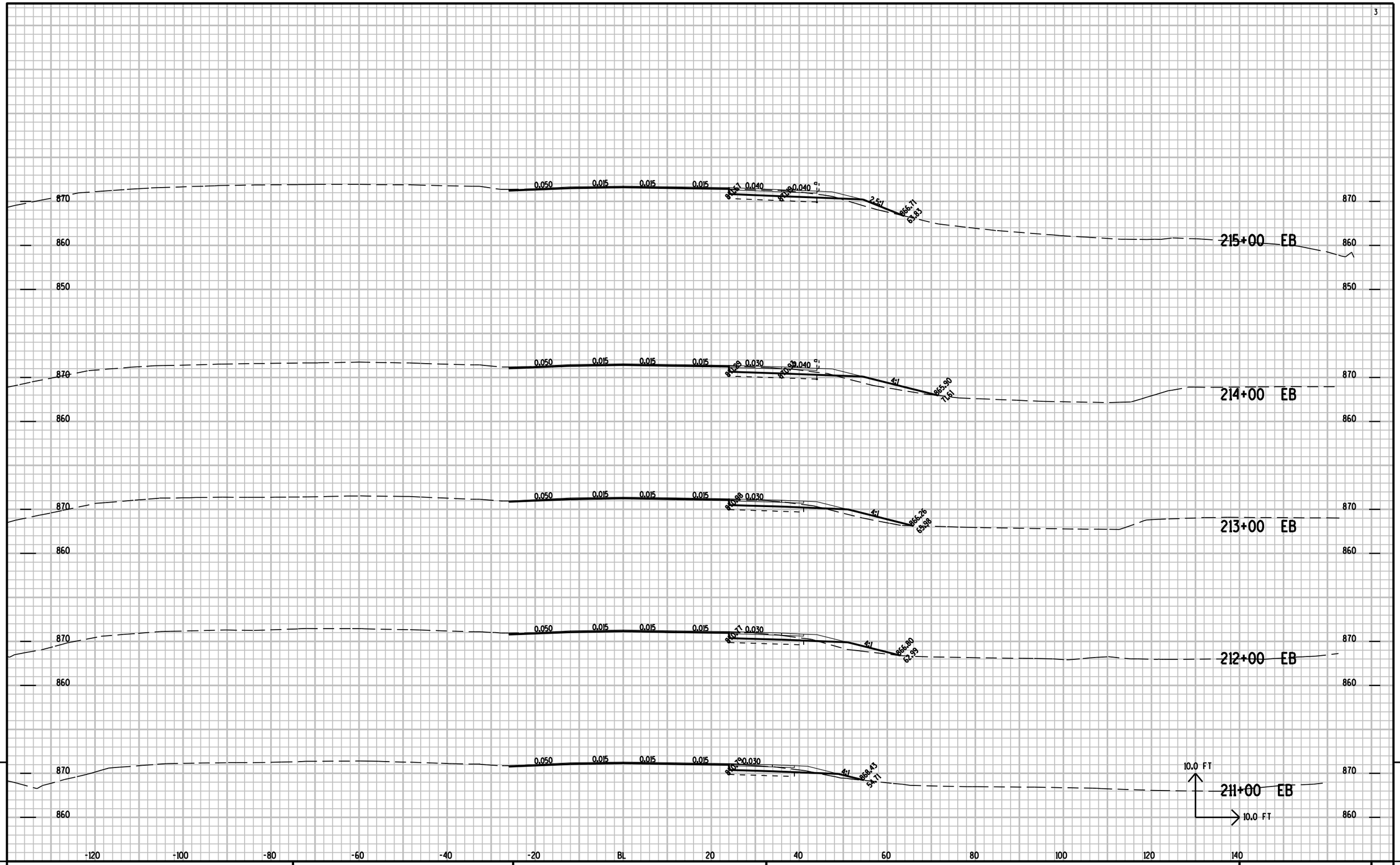

PROJECT NO: 1010-00-72	HWY: IH 39	COUNTY: DANE	CROSS SECTIONS: EB LANES	SHEET NO:	E

FILE NAME : r:\Support\CADDS\Projects\d1_10100072\090201_XS.DGN PLOT DATE : 25-APR-2012 10:03 PLOT BY : DOTJ3J PLOT NAME : PLOT SCALE : 2.000000:1.000000

9

9

PROJECT NO: 1010-00-72	HWY: IH 39	COUNTY: DANE	CROSS SECTIONS: EB LANES	SHEET NO:	E

FILE NAME : r:\Support\CADDS\Projects\d1_10100072\090201_XS.DGN PLOT DATE : 25-APR-2012 10:03 PLOT BY : DOTJ3J PLOT NAME : PLOT SCALE : 2.000000:1.000000

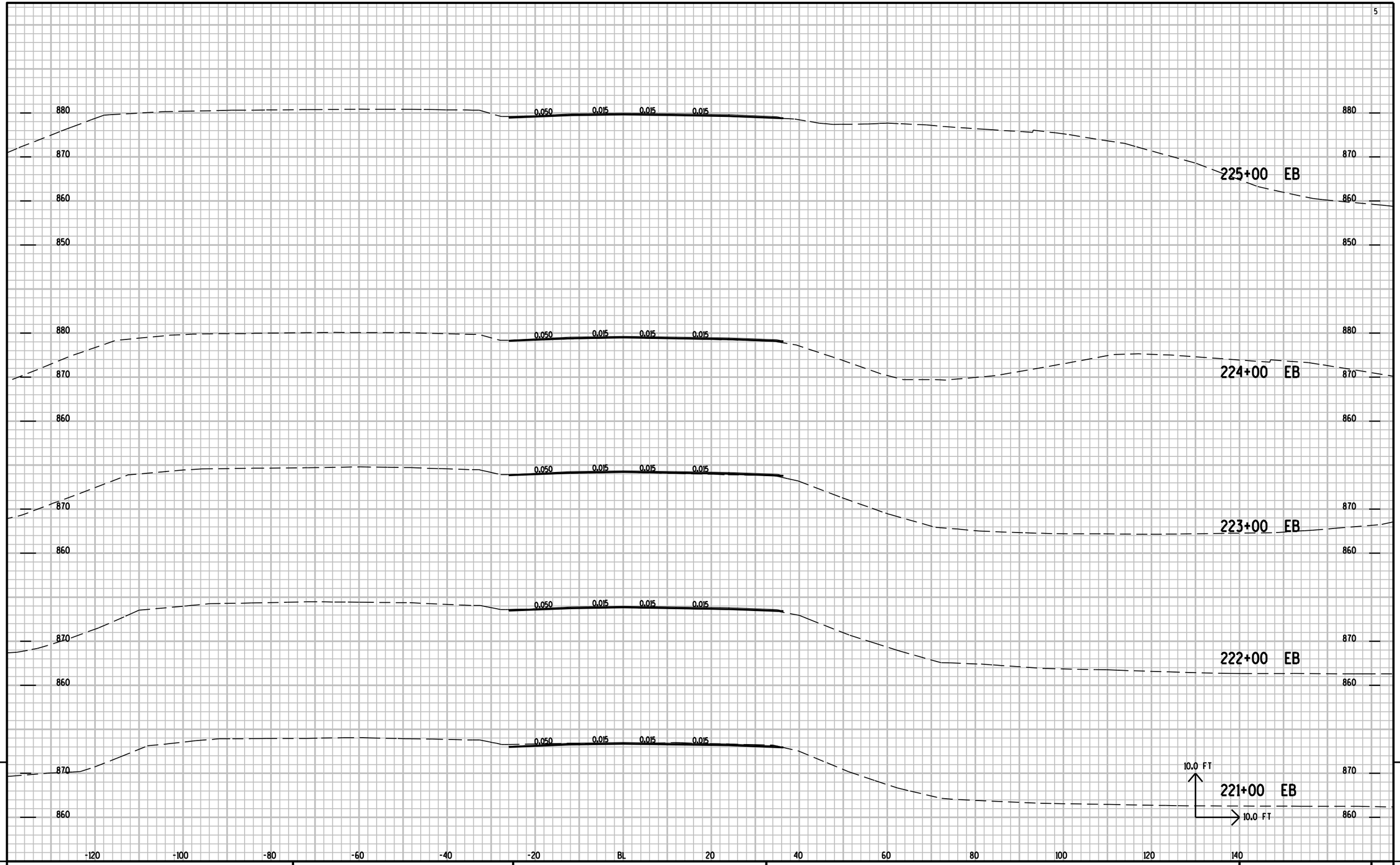

9

9

PROJECT NO: 1010-00-72	HWY: IH 39	COUNTY: DANE	CROSS SECTIONS: EB LANES	SHEET NO:	E

FILE NAME : r:\Support\CADDS\Projects\d1_10100072\090201_XS.DGN PLOT DATE : 25-APR-2012 10:04 PLOT BY : DOTJ3J PLOT NAME : PLOT SCALE : 2.000000:1.000000

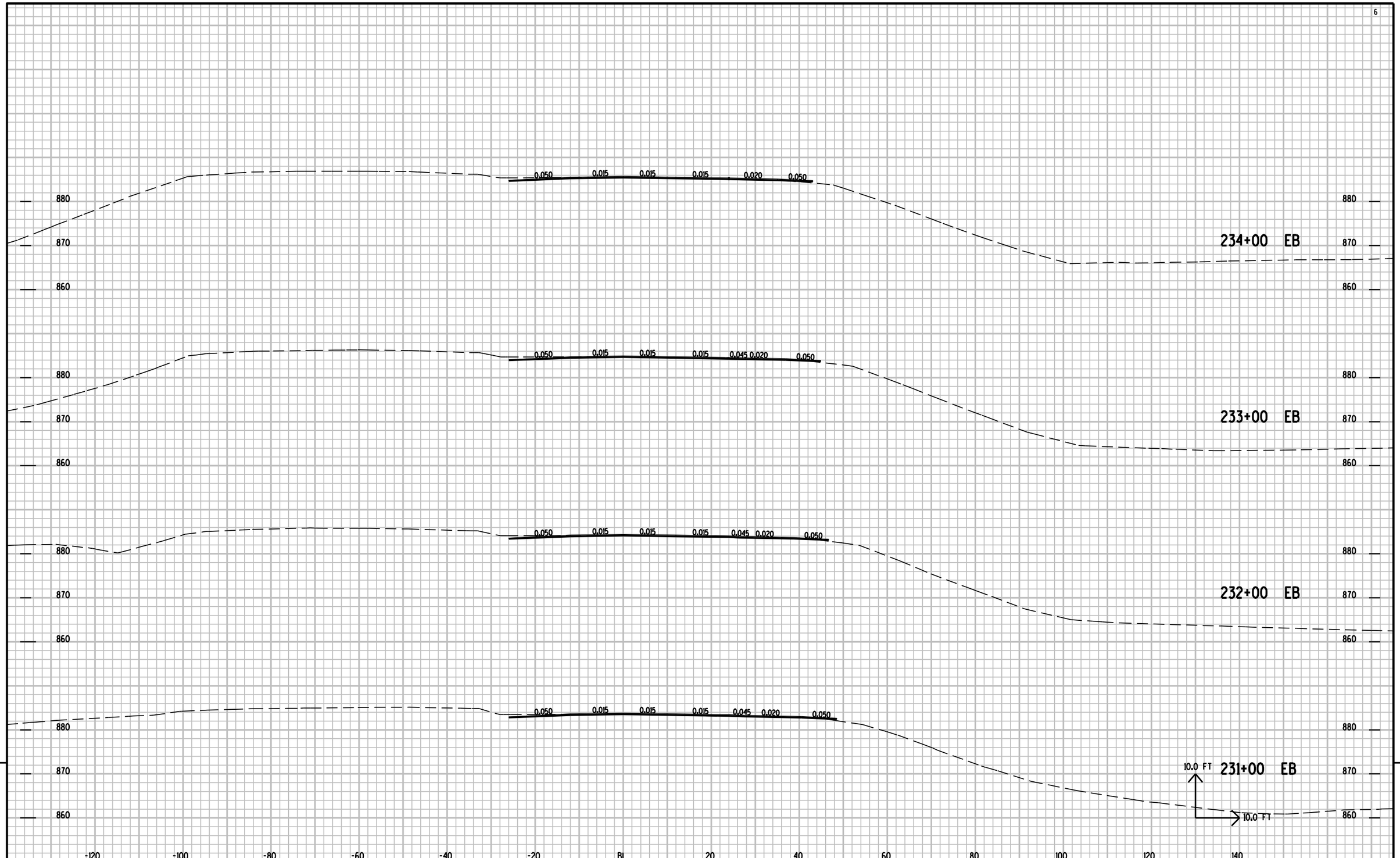

9 9

PROJECT NO: 1010-00-72	HWY: IH 39	COUNTY: DANE	CROSS SECTIONS: EB LANES	SHEET NO:	E

FILE NAME : r:\Support\CADDS\Projects\d1_10100072\090201_XS.DGN PLOT DATE : 25-APR-2012 10:04 PLOT BY : DOTJ3J PLOT NAME : PLOT SCALE : 2.000000:1.000000

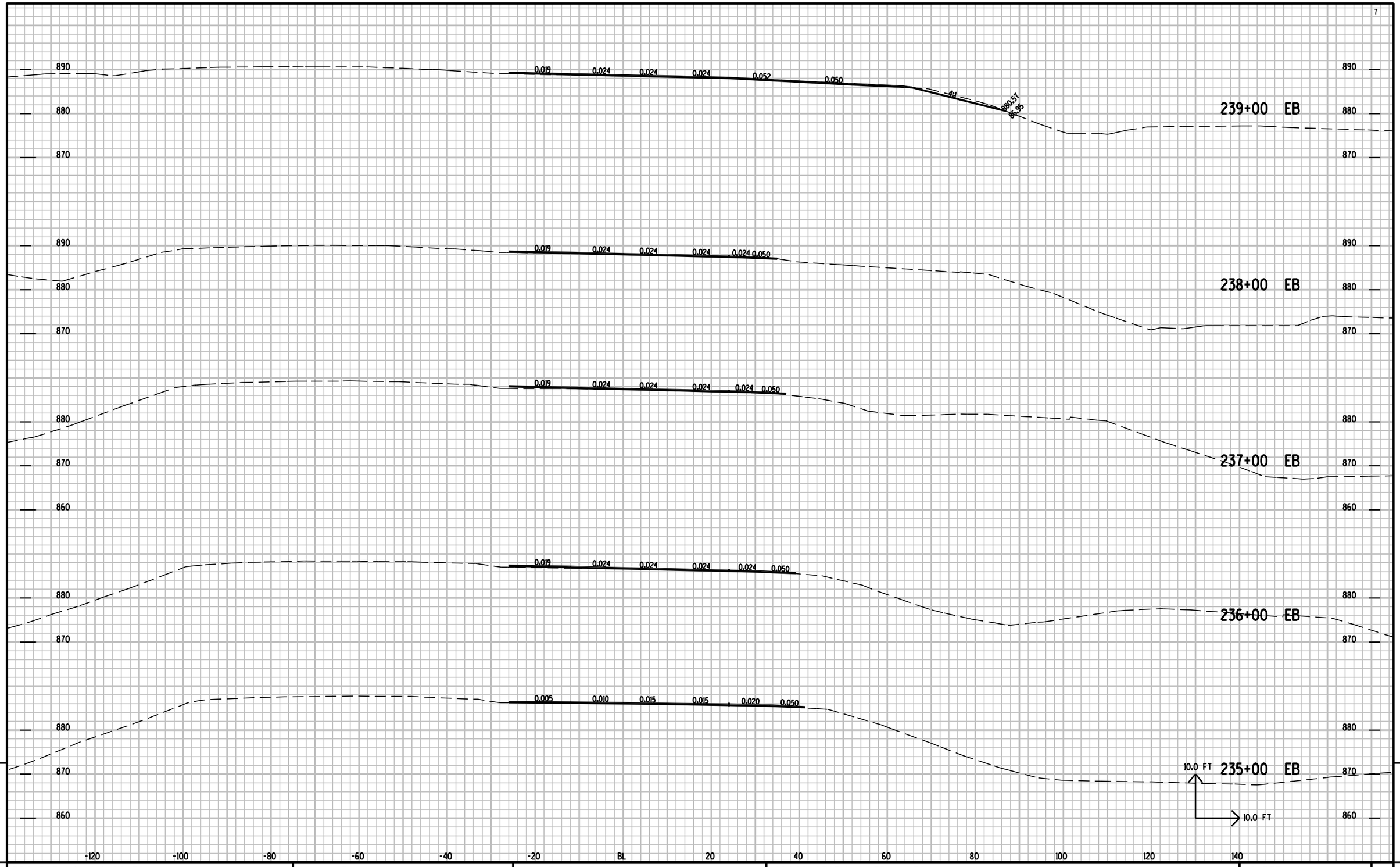

PROJECT NO: 1010-00-72	HWY: IH 39	COUNTY: DANE	CROSS SECTIONS: EB LANES	SHEET NO:	E

FILE NAME : r:\Support\CADDS\Projects\d1_10100072\090201_XS.DGN PLOT DATE : 25-APR-2012 10:04 PLOT BY : DOTJ3J PLOT NAME : PLOT SCALE : 2.000000:1.000000

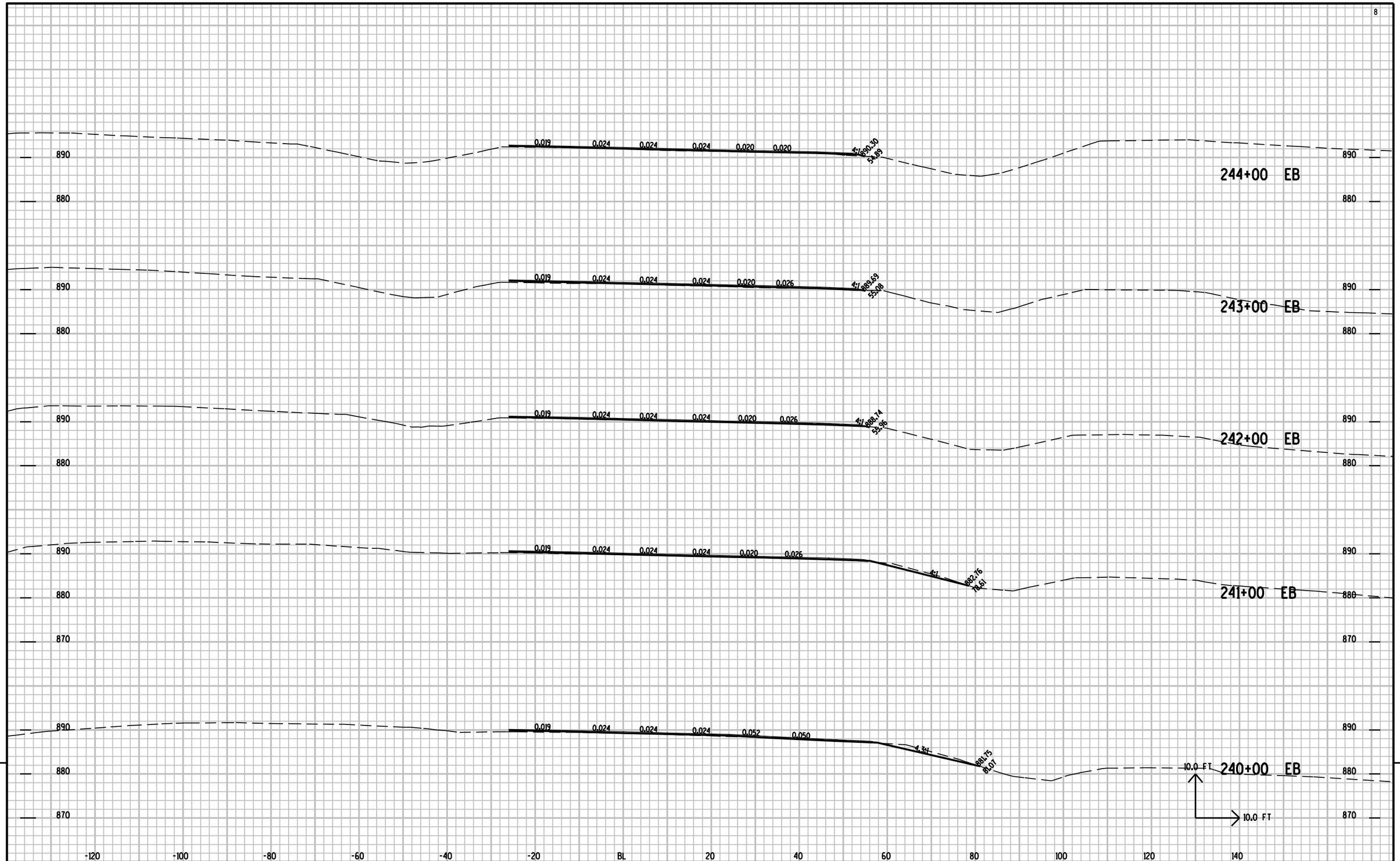

9

9

PROJECT NO: 1010-00-72	HWY: IH 39	COUNTY: DANE	CROSS SECTIONS: EB LANES	SHEET NO:	E

FILE NAME : r:\Support\CADDS\Projects\d1_10100072\090201_XS.DGN PLOT DATE : 25-APR-2012 10:04 PLOT BY : DOTJ3J PLOT NAME : PLOT SCALE : 2.000000:1.000000

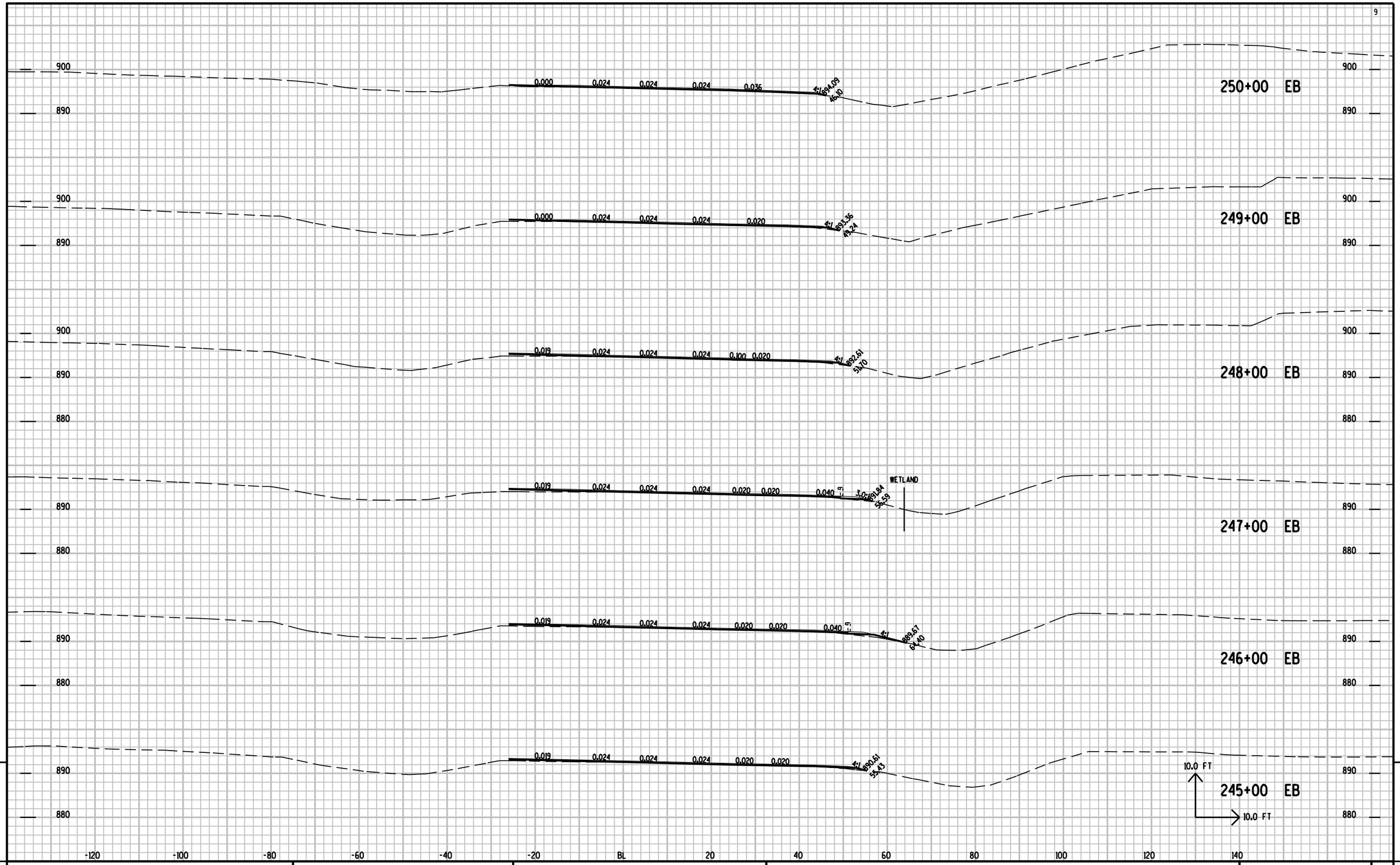

PROJECT NO: 1010-00-72	HWY: IH 39	COUNTY: DANE	CROSS SECTIONS: EB LANES	SHEET NO:	E

FILE NAME : r:\Support\CADDS\Projects\d1_10100072\090201_XS.DGN PLOT DATE : 25-APR-2012 10:05 PLOT BY : DOTJ3J PLOT NAME : PLOT SCALE : 2.000000:1.000000

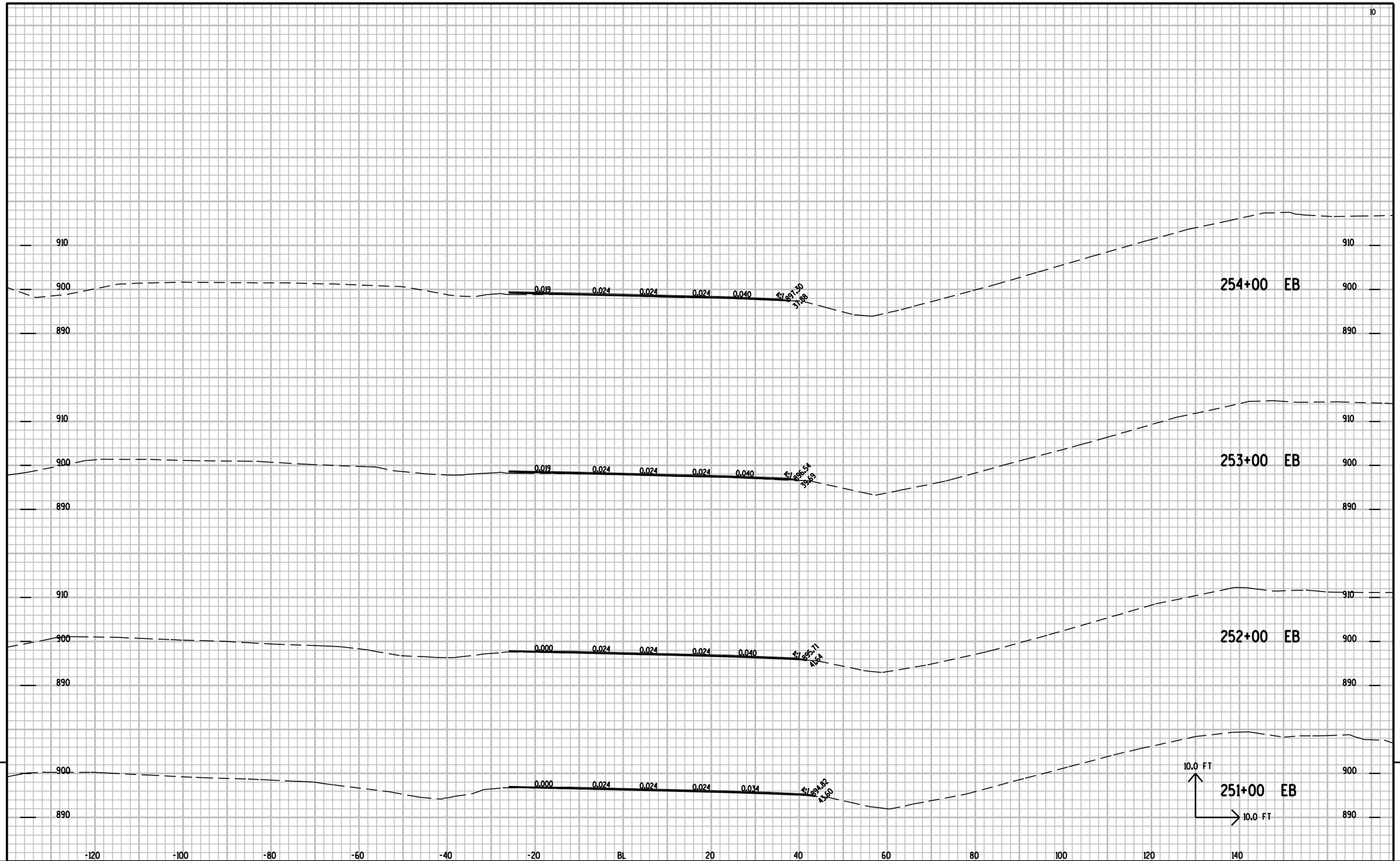

PROJECT NO: 1010-00-72	HWY: IH 39	COUNTY: DANE	CROSS SECTIONS: EB LANES	SHEET NO:	E

FILE NAME : r:\Support\CADDS\Projects\d1_10100072\090201_XS.DGN PLOT DATE : 25-APR-2012 10:05 PLOT BY : DOTJ3J PLOT NAME : PLOT SCALE : 2.000000:1.000000

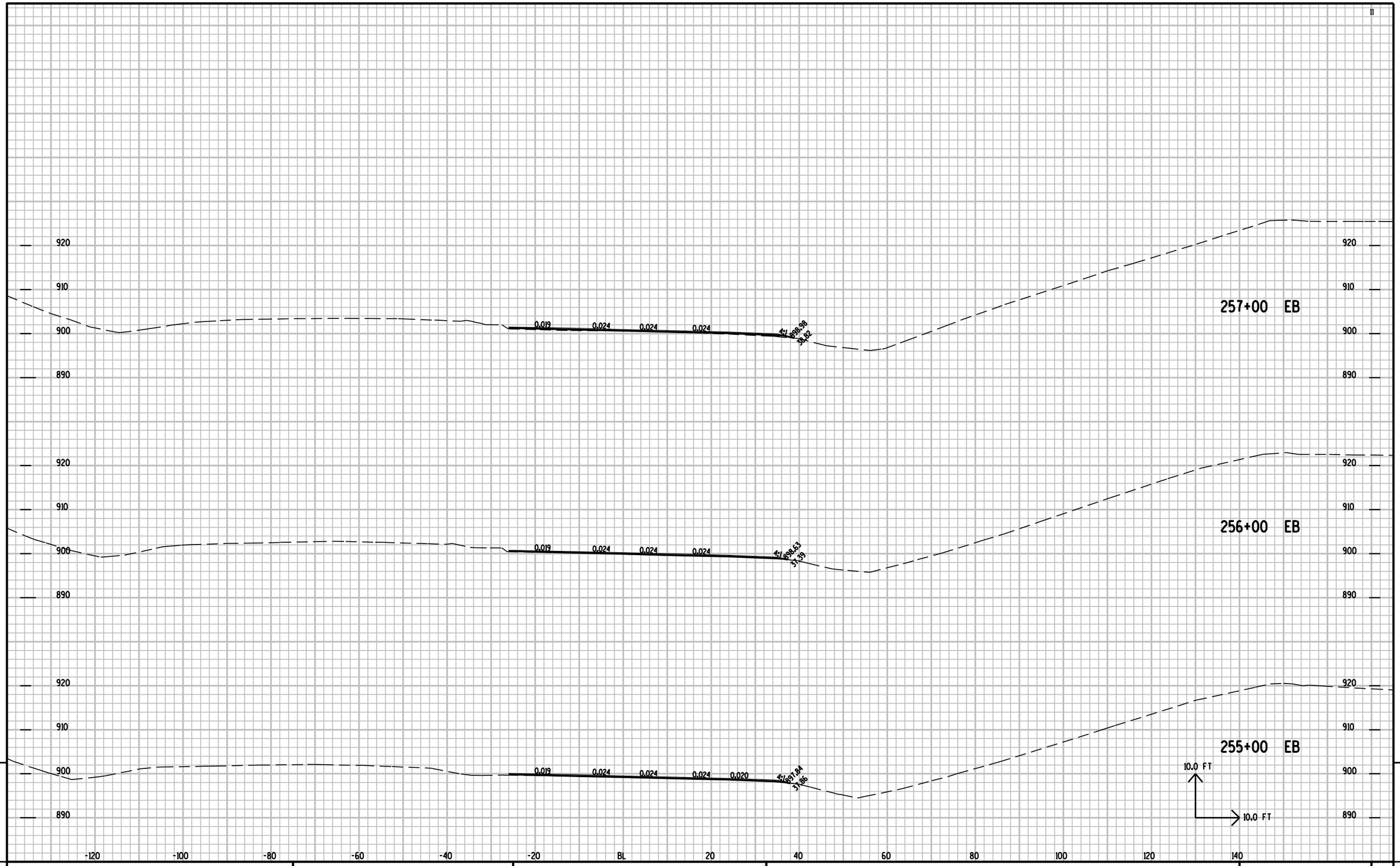

9

9

PROJECT NO: 1010-00-72	HWY: IH 39	COUNTY: DANE	CROSS SECTIONS: EB LANES	SHEET NO:	E

FILE NAME : r:\Support\CADDS\Projects\d1_10100072\090201_XS.DGN PLOT DATE : 25-APR-2012 10:05 PLOT BY : DOTJ3J PLOT NAME : PLOT SCALE : 2.000000:1.000000

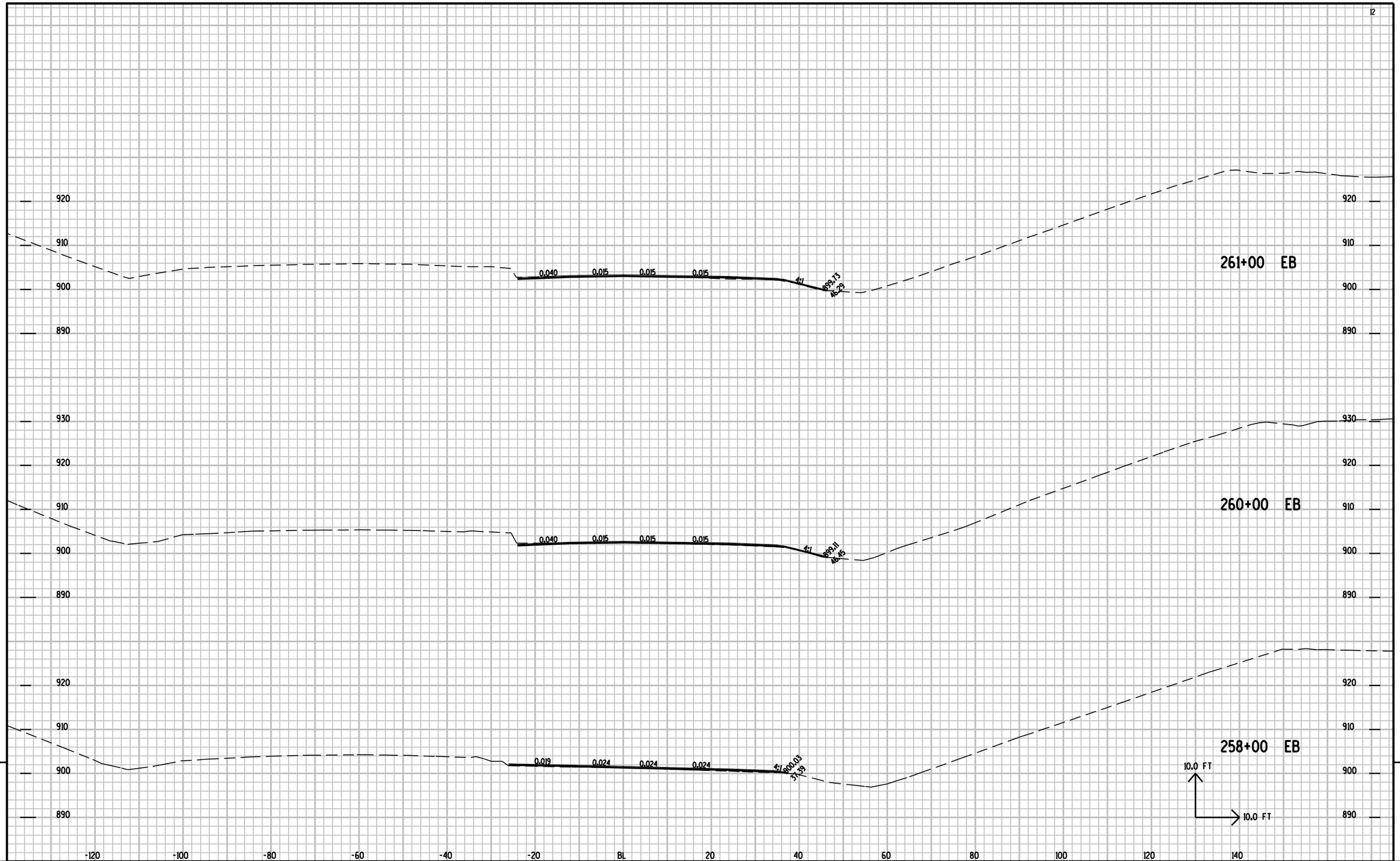

PROJECT NO: 1010-00-72	HWY: IH 39	COUNTY: DANE	CROSS SECTIONS: EB LANES	SHEET NO:	E

FILE NAME : r:\Support\CADDS\Projects\d1_10100072\090201_XS.DGN PLOT DATE : 25-APR-2012 10:05 PLOT BY : DOTJ3J PLOT NAME : PLOT SCALE : 2.000000:1.000000

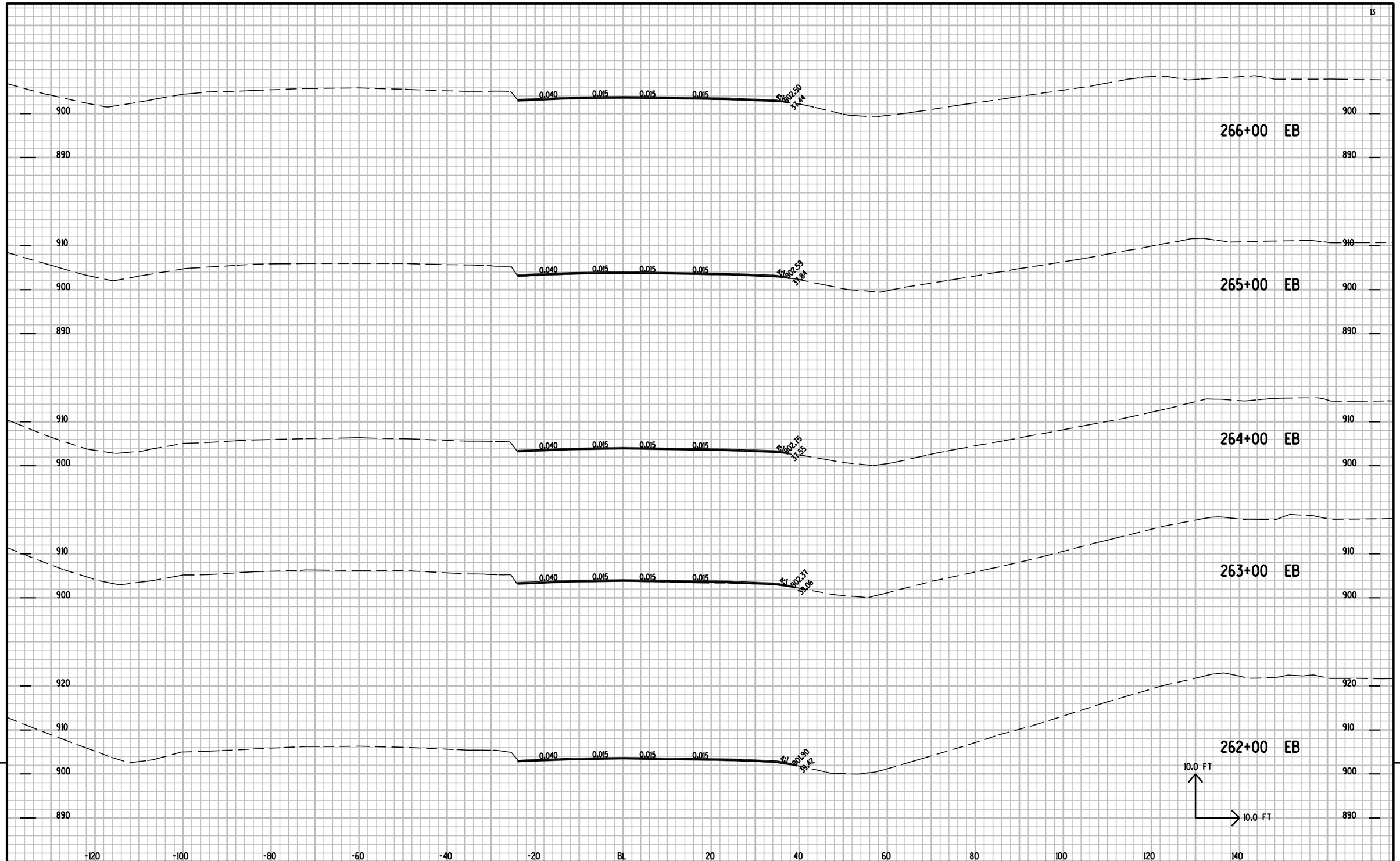

PROJECT NO: 1010-00-72	HWY: IH 39	COUNTY: DANE	CROSS SECTIONS: EB LANES	SHEET NO:	E

FILE NAME : r:\Support\CADDS\Projects\d1_10100072\090201_XS.DGN PLOT DATE : 25-APR-2012 10:05 PLOT BY : DOTJ3J PLOT NAME : PLOT SCALE : 2.000000:1.000000

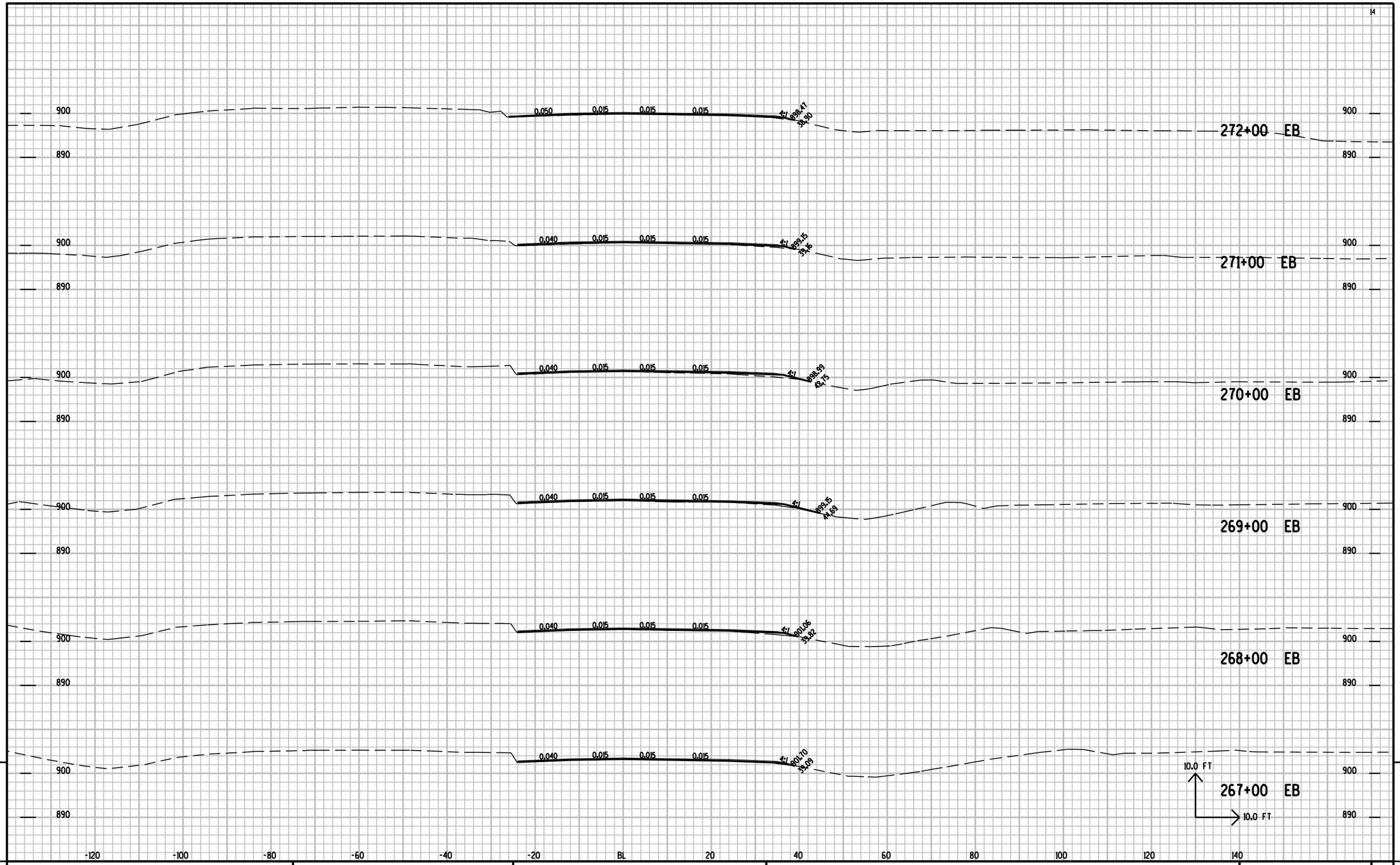

PROJECT NO: 1010-00-72	HWY: IH 39	COUNTY: DANE	CROSS SECTIONS: EB LANES	SHEET NO:	E

FILE NAME : r:\Support\CADDS\Projects\d1_10100072\090201_XS.DGN PLOT DATE : 25-APR-2012 10:06 PLOT BY : DOTJ3J PLOT NAME : PLOT SCALE : 2.000000:1.000000

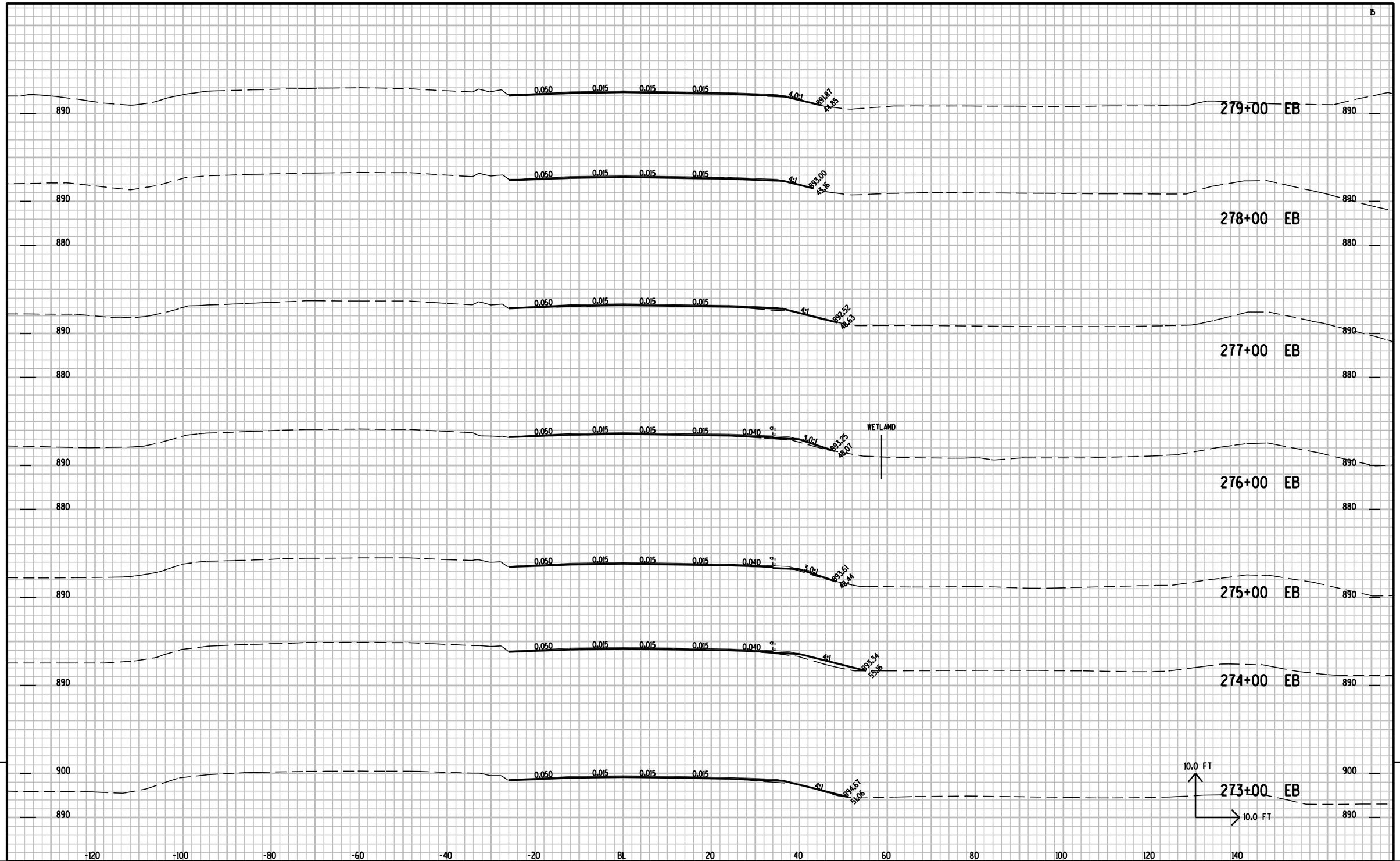

PROJECT NO: 1010-00-72	HWY: IH 39	COUNTY: DANE	CROSS SECTIONS: EB LANES	SHEET NO:	E

FILE NAME : r:\Support\CADDS\Projects\d1_10100072\090201_XS.DGN PLOT DATE : 25-APR-2012 10:06 PLOT BY : DOTJ3J PLOT NAME : PLOT SCALE : 2.000000:1.000000

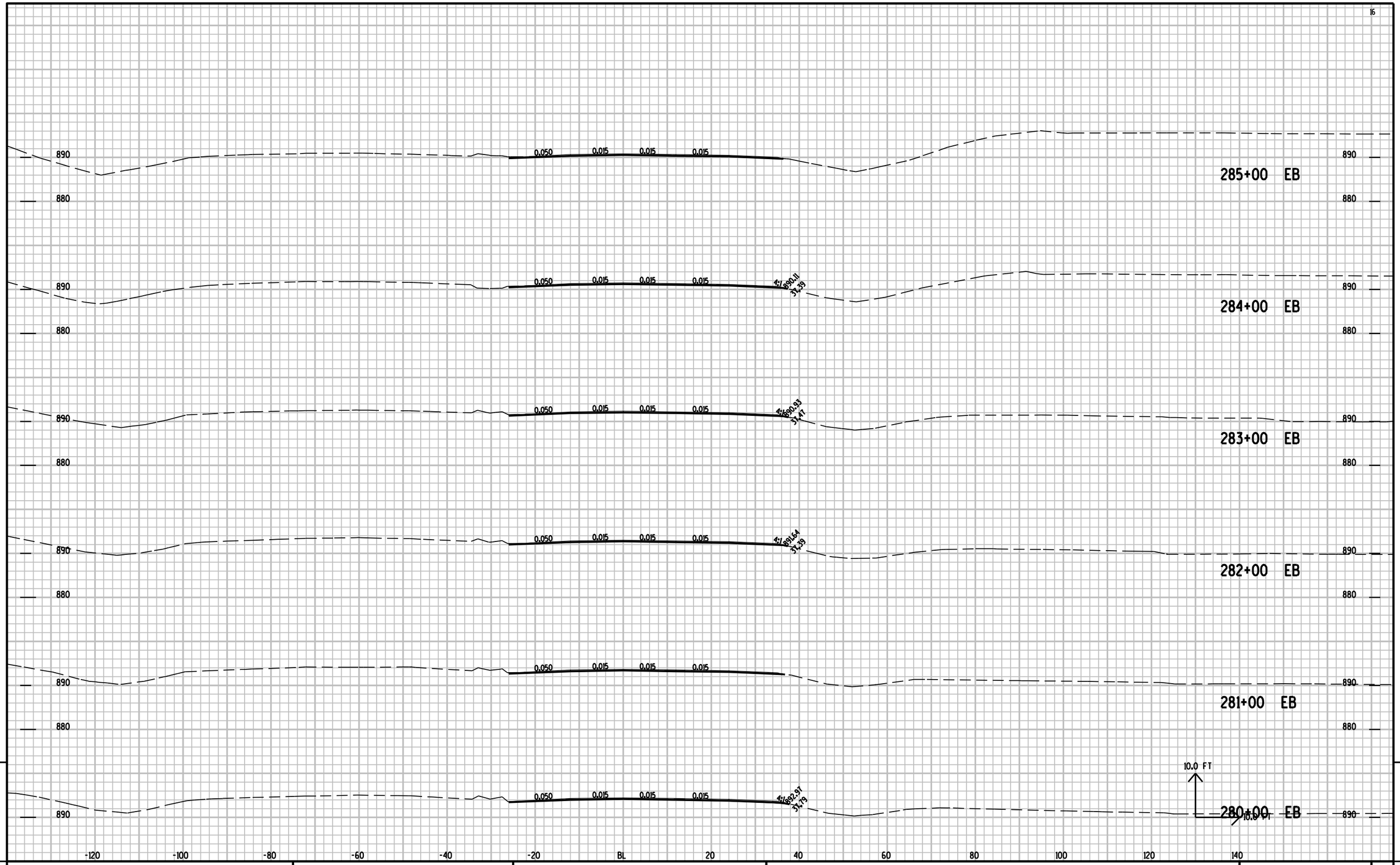

9

9

PROJECT NO: 1010-00-72	HWY: IH 39	COUNTY: DANE	CROSS SECTIONS: EB LANES	SHEET NO:	E

FILE NAME : r:\Support\CADDS\Projects\d1_10100072\090201_XS.DGN PLOT DATE : 25-APR-2012 10:06 PLOT BY : DOTJ3J PLOT NAME : PLOT SCALE : 2.000000:1.000000

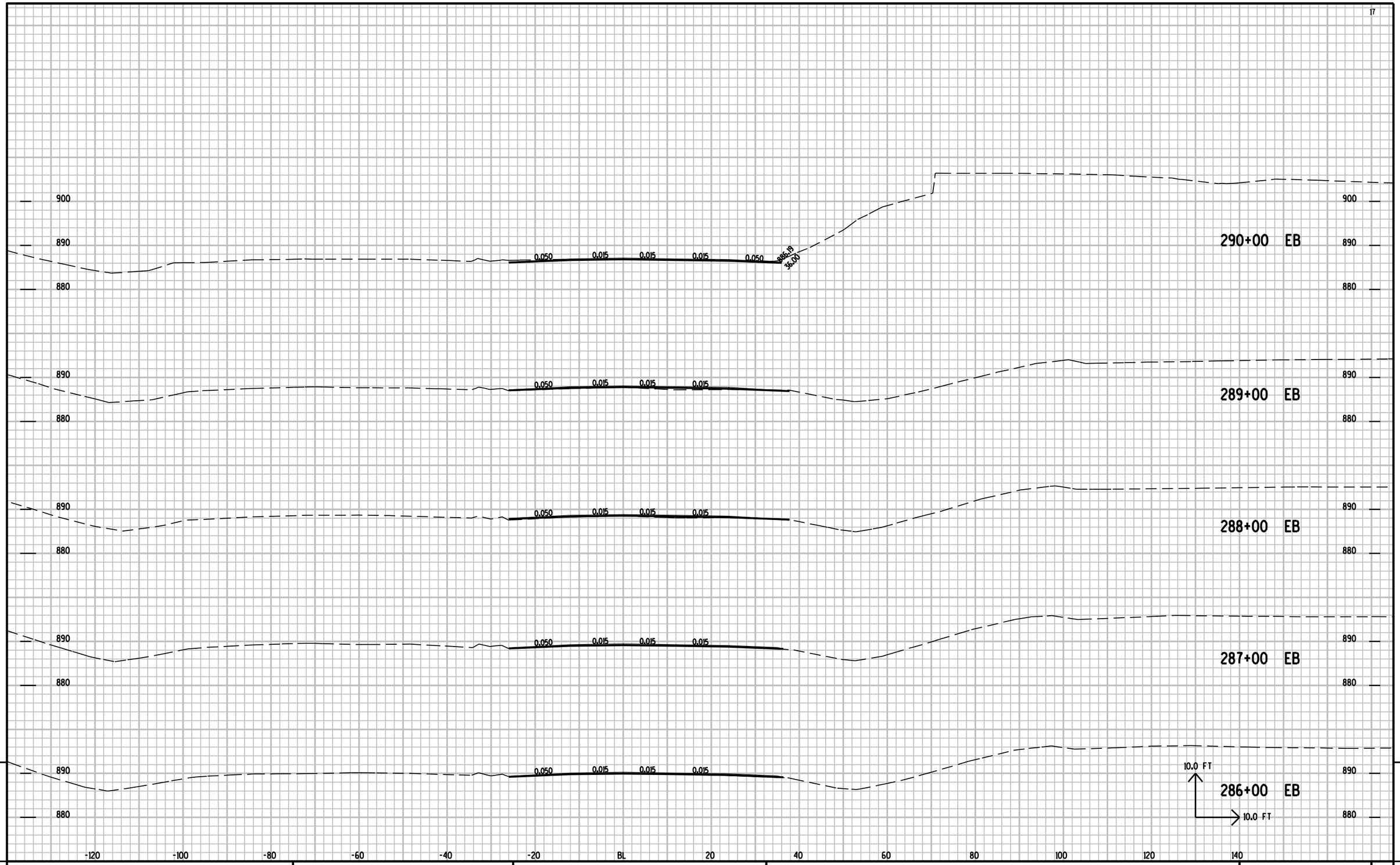

PROJECT NO: 1010-00-72	HWY: IH 39	COUNTY: DANE	CROSS SECTIONS: EB LANES	SHEET NO:	E

FILE NAME : r:\Support\CADDS\Projects\d1_10100072\090201_XS.DGN PLOT DATE : 25-APR-2012 10:06 PLOT BY : DOTJ3J PLOT NAME : PLOT SCALE : 2.000000:1.000000

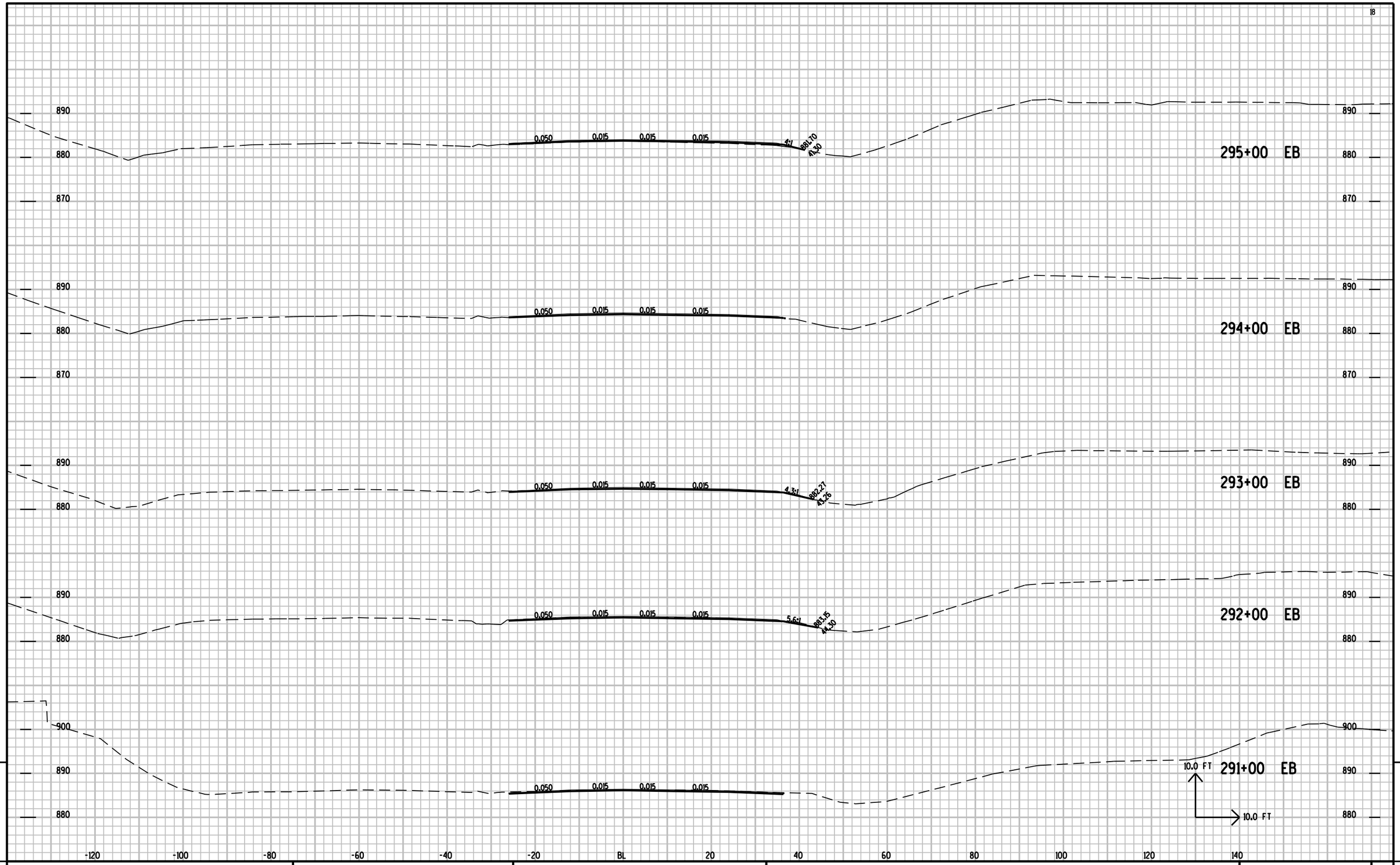

9

9

PROJECT NO: 1010-00-72	HWY: IH 39	COUNTY: DANE	CROSS SECTIONS: EB LANES	SHEET NO:	E

FILE NAME : r:\Support\CADDS\Projects\d1_10100072\090201_XS.DGN PLOT DATE : 25-APR-2012 10:07 PLOT BY : DOTJ3J PLOT NAME : PLOT SCALE : 2.000000:1.000000

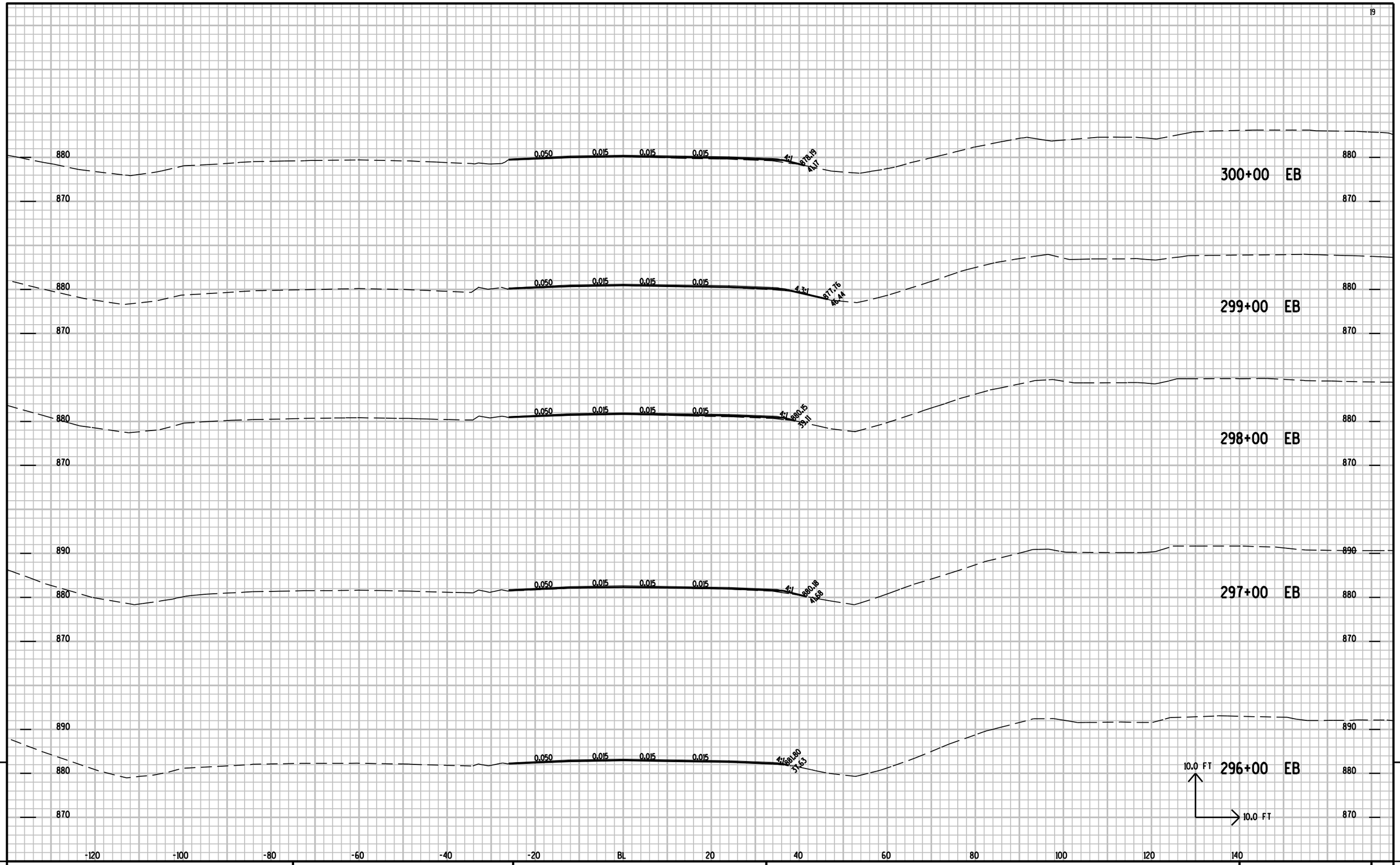

PROJECT NO: 1010-00-72	HWY: IH 39	COUNTY: DANE	CROSS SECTIONS: EB LANES	SHEET NO:	E

FILE NAME : r:\Support\CADDS\Projects\d1_10100072\090201_XS.DGN PLOT DATE : 25-APR-2012 10:07 PLOT BY : DOTJ3J PLOT NAME : PLOT SCALE : 2.000000:1.000000

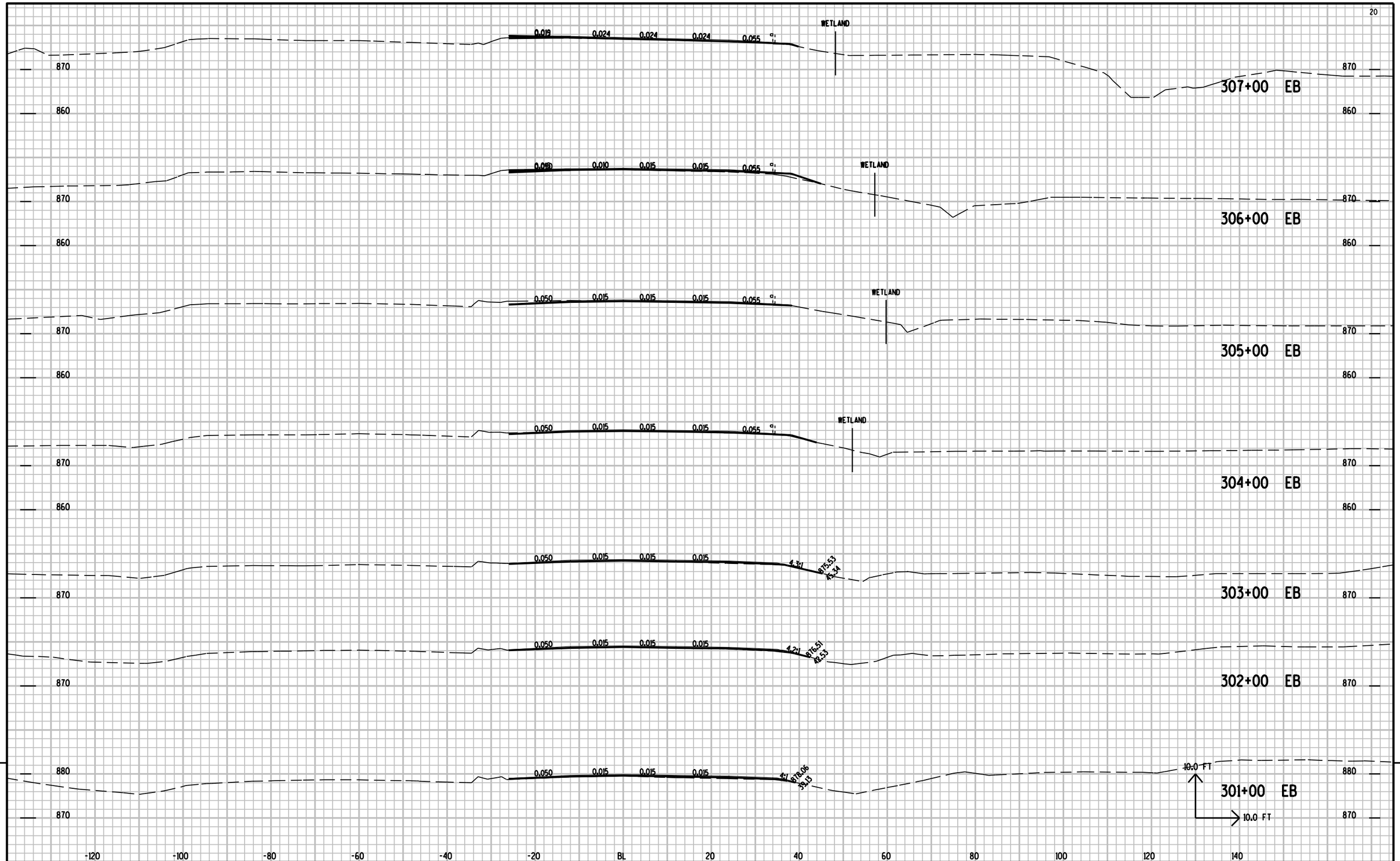

9

PROJECT NO: 1010-00-72	HWY: IH 39	COUNTY: DANE	CROSS SECTIONS: EB LANES	SHEET NO:	E

FILE NAME : r:\Support\CADDS\Projects\d1_10100072\090201_XS.DGN PLOT DATE : 25-APR-2012 10:07 PLOT BY : DOTJ3J PLOT NAME : PLOT SCALE : 2.000000:1.000000

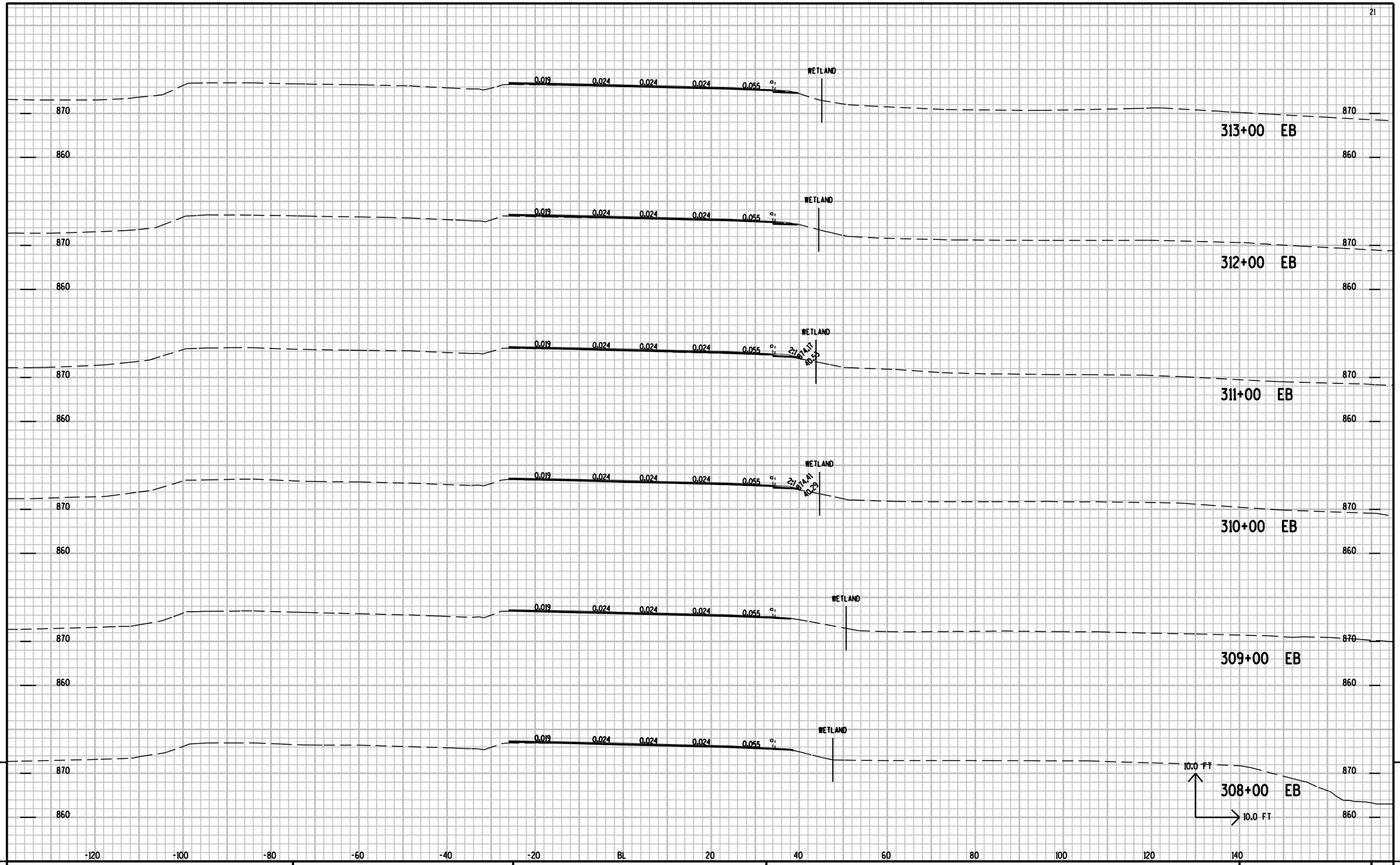

9

9

PROJECT NO: 1010-00-72	HWY: IH 39	COUNTY: DANE	CROSS SECTIONS: EB LANES	SHEET NO:	E

FILE NAME : r:\Support\CADDS\Projects\d1_10100072\090201_XS.DGN PLOT DATE : 25-APR-2012 10:07 PLOT BY : DOTJ3J PLOT NAME : PLOT SCALE : 2.000000:1.000000

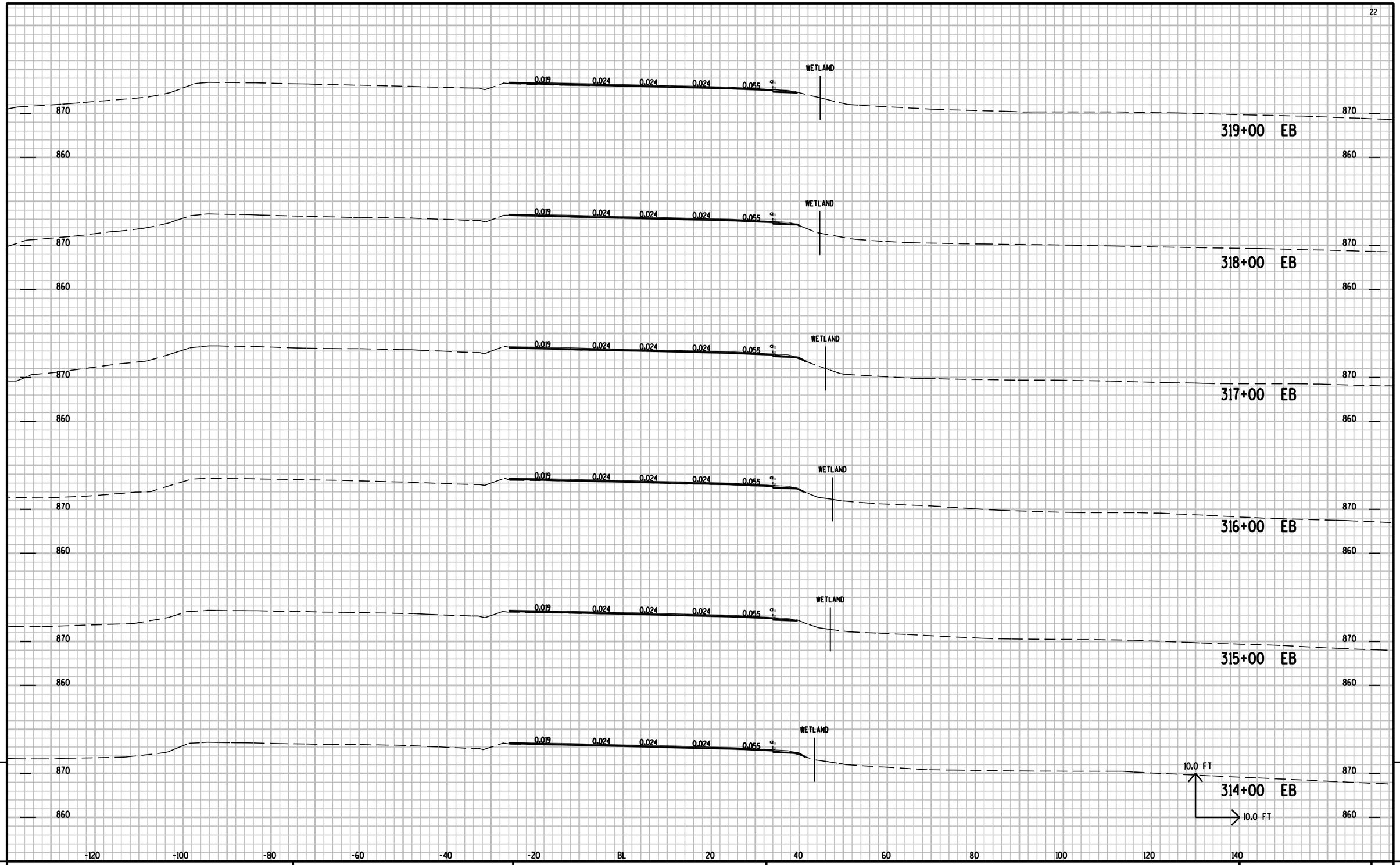

9

9

PROJECT NO: 1010-00-72	HWY: IH 39	COUNTY: DANE	CROSS SECTIONS: EB LANES	SHEET NO:	E

FILE NAME : r:\Support\CADDS\Projects\d1_10100072\090201_XS.DGN PLOT DATE : 25-APR-2012 10:08 PLOT BY : DOTJ3J PLOT NAME : PLOT SCALE : 2.000000:1.000000

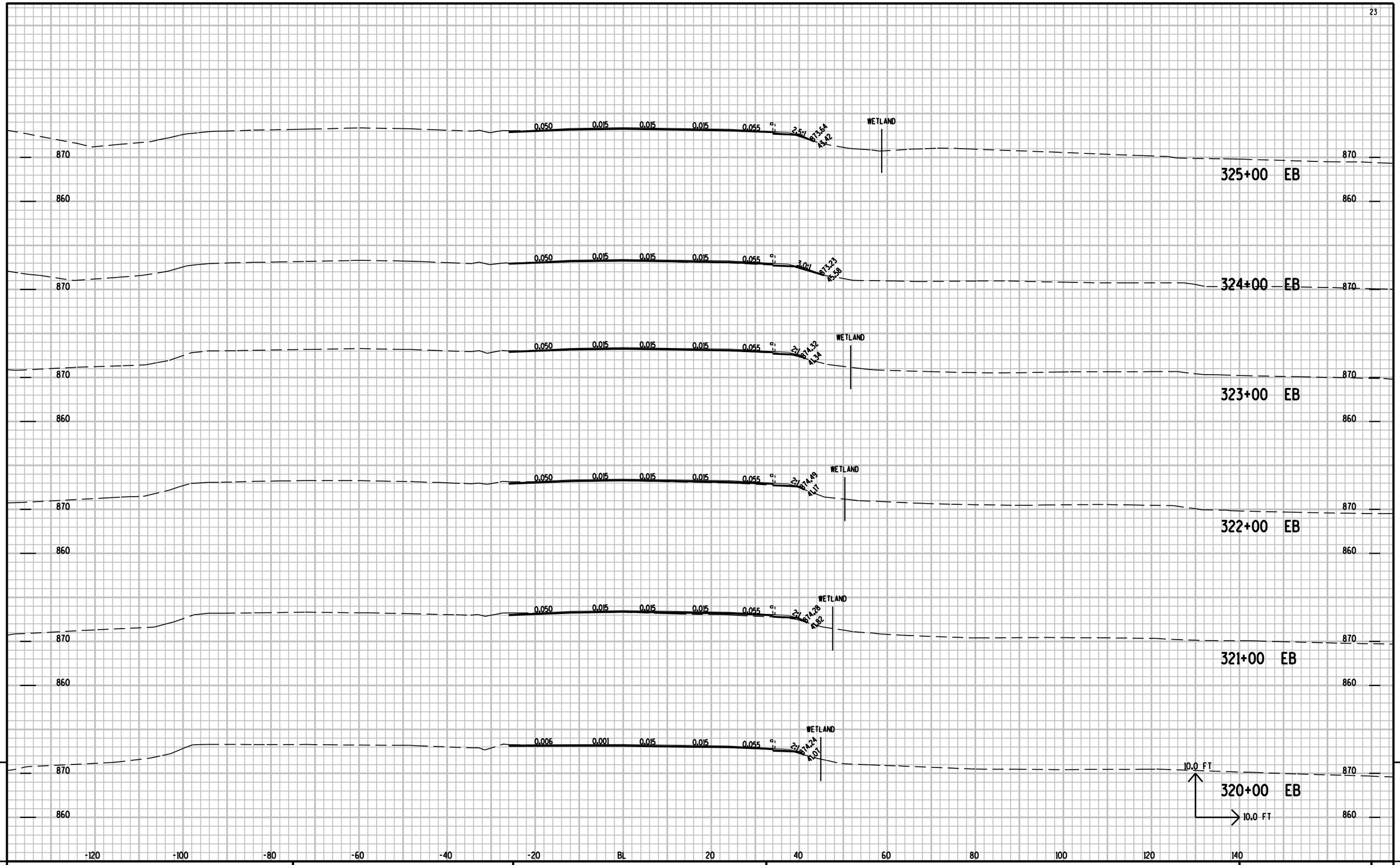

9

PROJECT NO: 1010-00-72	HWY: IH 39	COUNTY: DANE	CROSS SECTIONS: EB LANES	SHEET NO:	E

FILE NAME : r:\Support\CADDS\Projects\d1_10100072\090201_XS.DGN PLOT DATE : 25-APR-2012 10:08 PLOT BY : DOTJ3J PLOT NAME : PLOT SCALE : 2.000000:1.000000

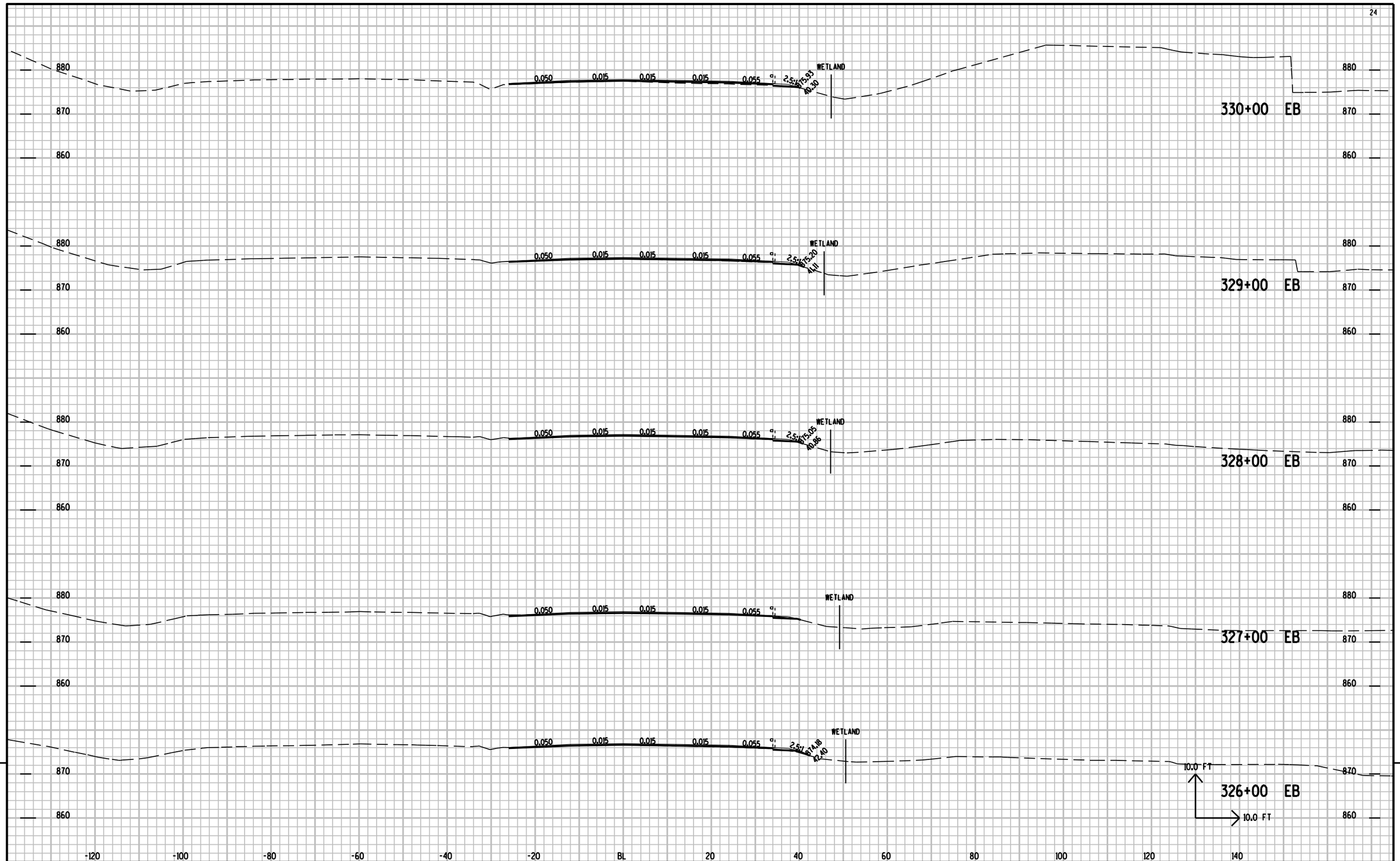

9

9

PROJECT NO: 1010-00-72	HWY: IH 39	COUNTY: DANE	CROSS SECTIONS: EB LANES	SHEET NO:	E

FILE NAME : r:\Support\CADDS\Projects\d1_10100072\090201_XS.DGN PLOT DATE : 25-APR-2012 10:08 PLOT BY : DOTJ3J PLOT NAME : PLOT SCALE : 2.000000:1.000000

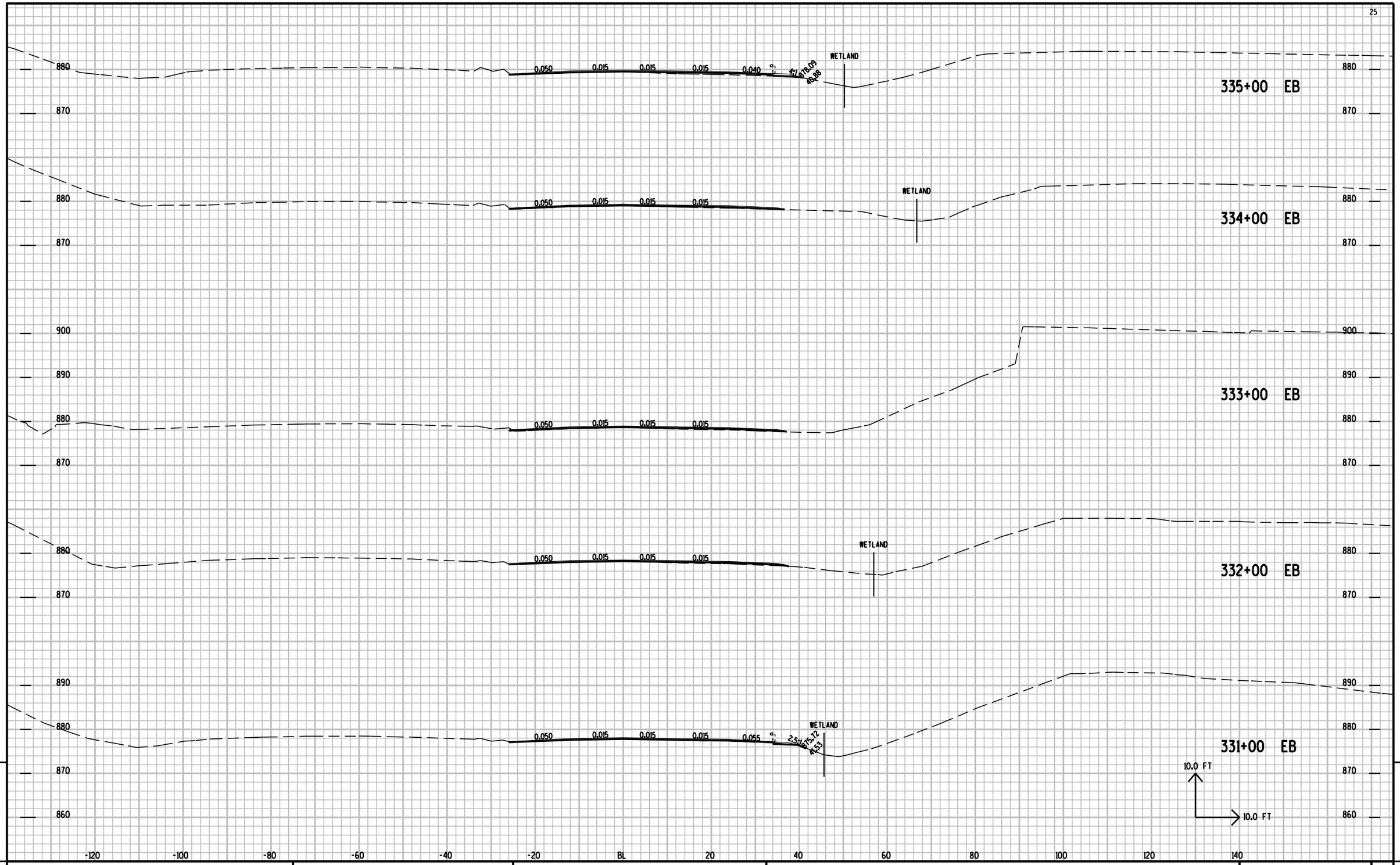

9

9

PROJECT NO: 1010-00-72	HWY: IH 39	COUNTY: DANE	CROSS SECTIONS: EB LANES	SHEET NO:	E

FILE NAME : r:\Support\CADDS\Projects\d1_10100072\090201_XS.DGN PLOT DATE : 25-APR-2012 10:08 PLOT BY : DOTJ3J PLOT NAME : PLOT SCALE : 2.000000:1.000000

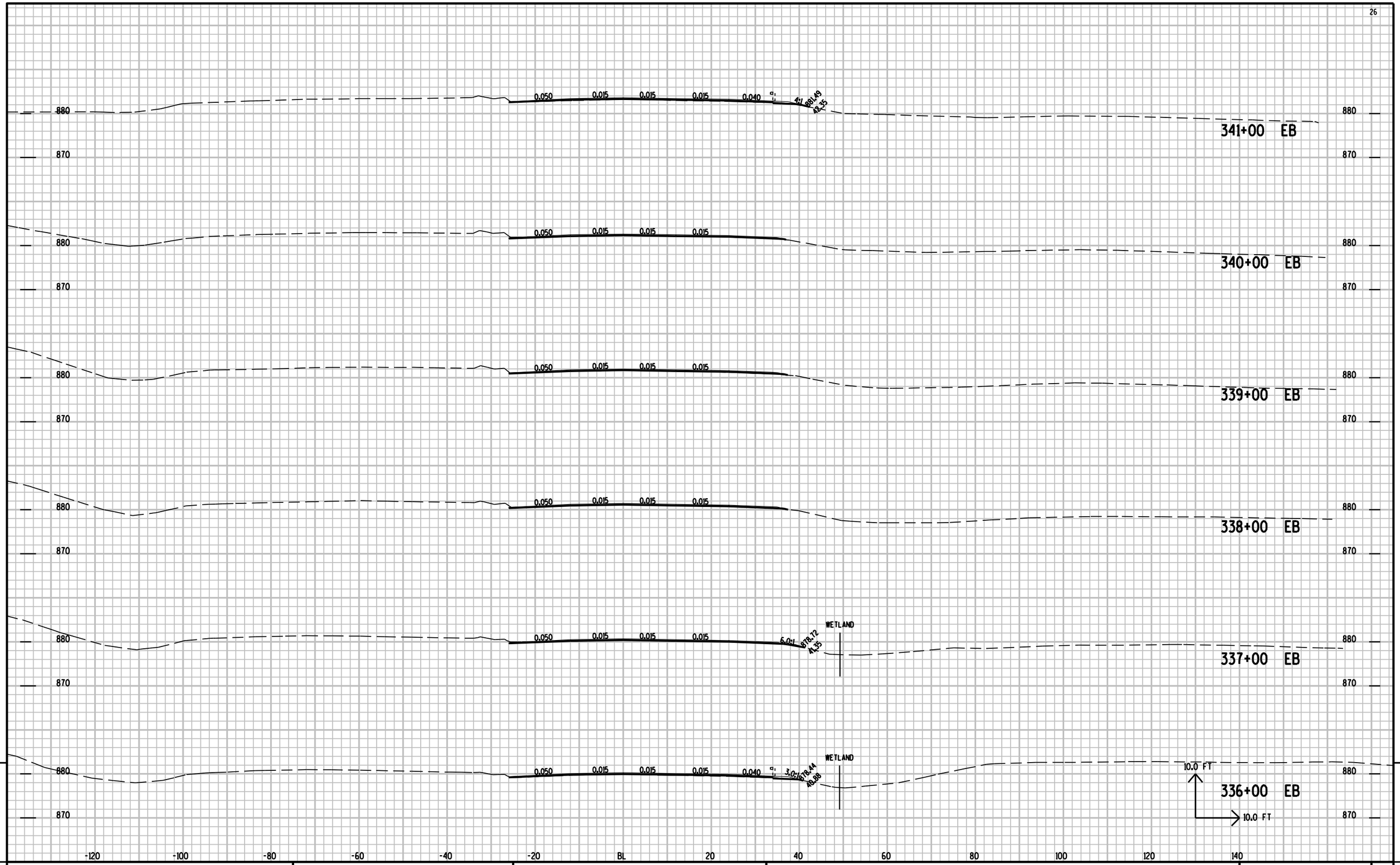

9

9

PROJECT NO: 1010-00-72	HWY: IH 39	COUNTY: DANE	CROSS SECTIONS: EB LANES	SHEET NO:	E

FILE NAME : r:\Support\CADDS\Projects\d1_10100072\090201_XS.DGN PLOT DATE : 25-APR-2012 10:08 PLOT BY : DOTJ3J PLOT NAME : PLOT SCALE : 2.000000:1.000000

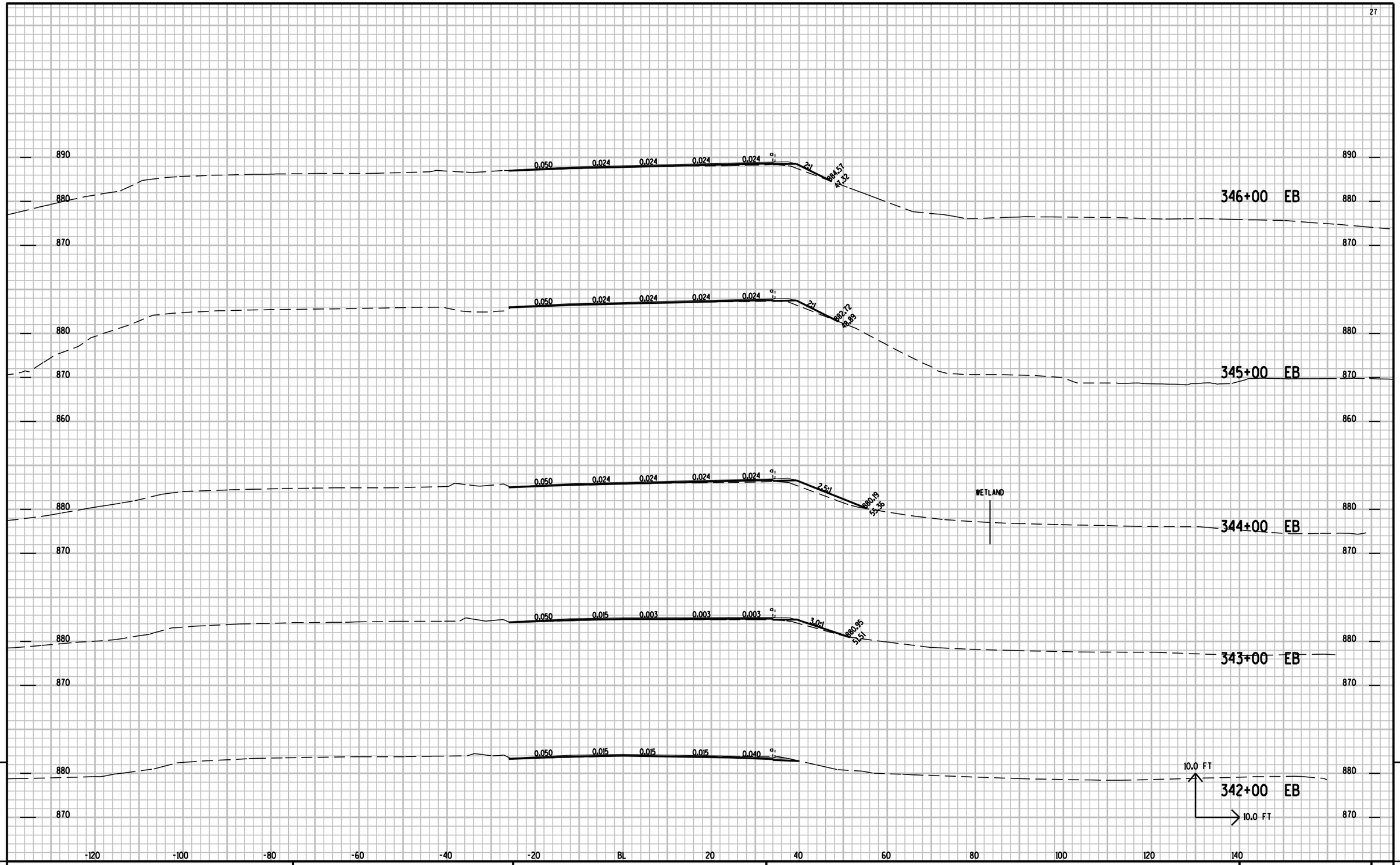

9

9

PROJECT NO: 1010-00-72	HWY: IH 39	COUNTY: DANE	CROSS SECTIONS: EB LANES	SHEET NO:	E

FILE NAME : r:\Support\CADDS\Projects\d1_10100072\090201_XS.DGN PLOT DATE : 25-APR-2012 10:09 PLOT BY : DOTJ3J PLOT NAME : PLOT SCALE : 2.000000:1.000000

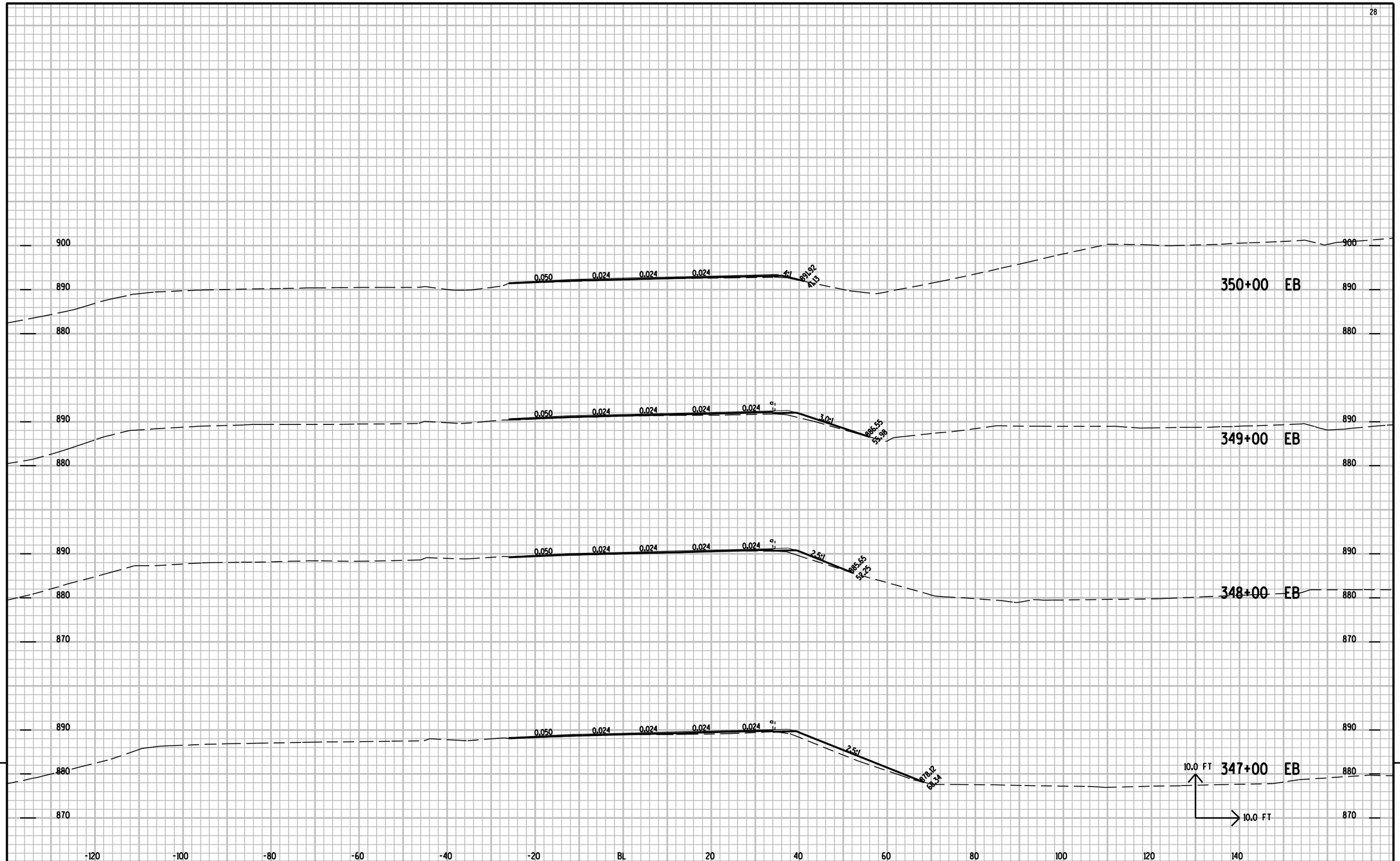

9

9

PROJECT NO: 1010-00-72	HWY: IH 39	COUNTY: DANE	CROSS SECTIONS: EB LANES	SHEET NO:	E

FILE NAME : r:\Support\CADDS\Projects\d1_10100072\090201_XS.DGN PLOT DATE : 25-APR-2012 10:09 PLOT BY : DOTJ3J PLOT NAME : PLOT SCALE : 2.000000:1.000000

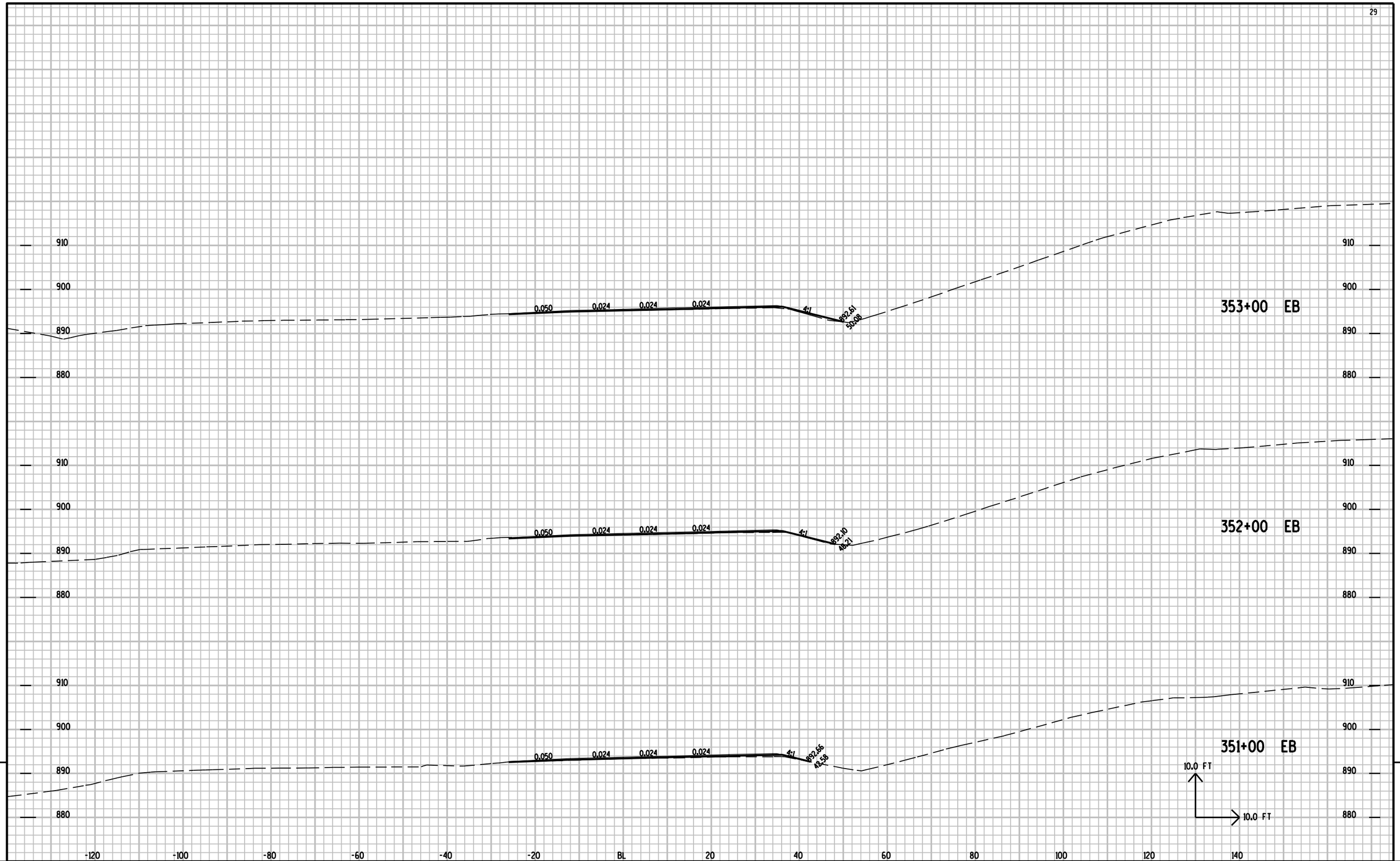

9

9

PROJECT NO: 1010-00-72	HWY: IH 39	COUNTY: DANE	CROSS SECTIONS: EB LANES	SHEET NO:	E

FILE NAME : r:\Support\CADDS\Projects\d1_10100072\090201_XS.DGN PLOT DATE : 25-APR-2012 10:09 PLOT BY : DOTJ3J PLOT NAME : PLOT SCALE : 2.000000:1.000000

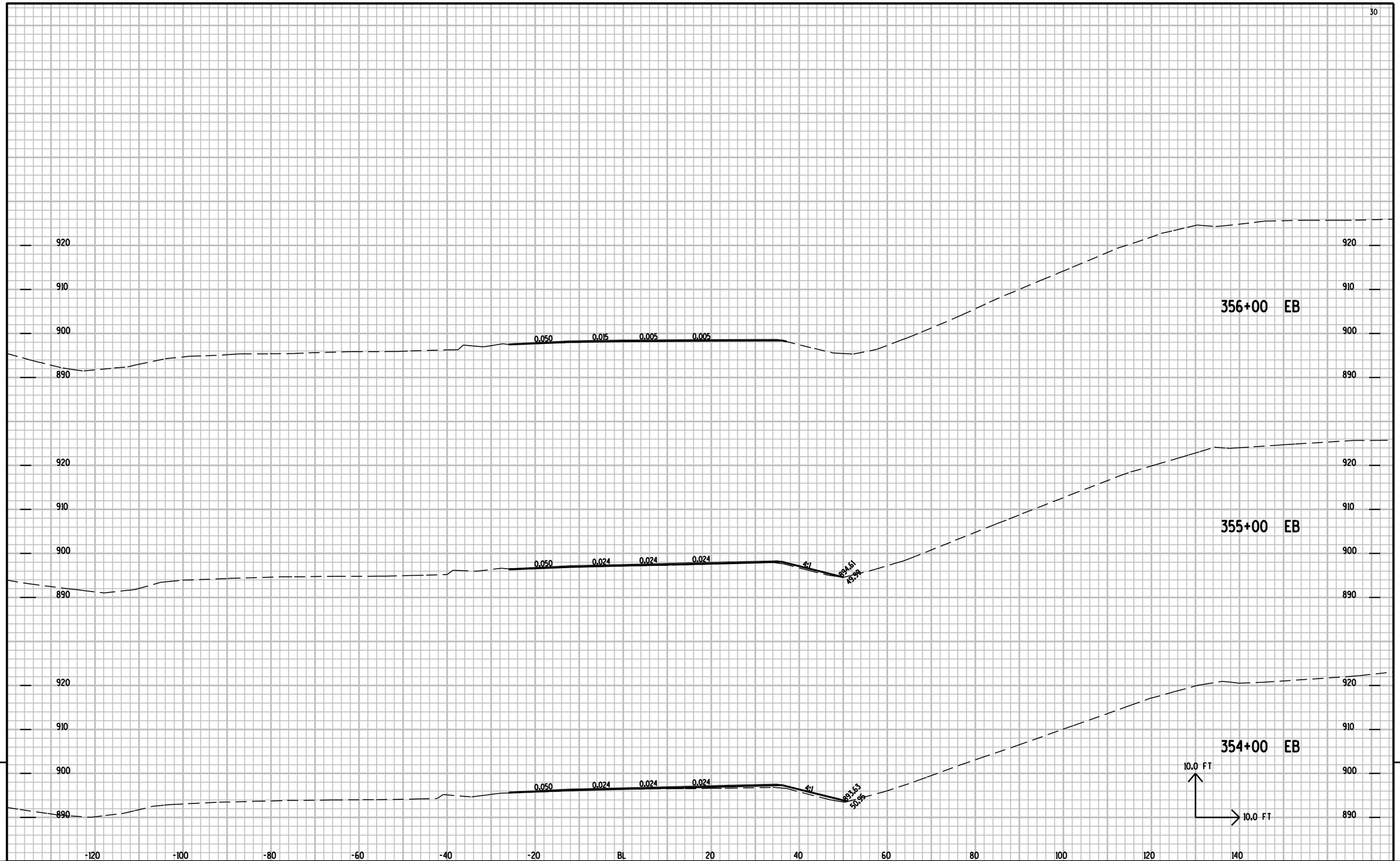

9

9

PROJECT NO: 1010-00-72	HWY: IH 39	COUNTY: DANE	CROSS SECTIONS: EB LANES	SHEET NO:	E

FILE NAME : r:\Support\CADDS\Projects\d1_10100072\090201_XS.DGN PLOT DATE : 25-APR-2012 10:09 PLOT BY : DOTJ3J PLOT NAME : PLOT SCALE : 2.000000:1.000000

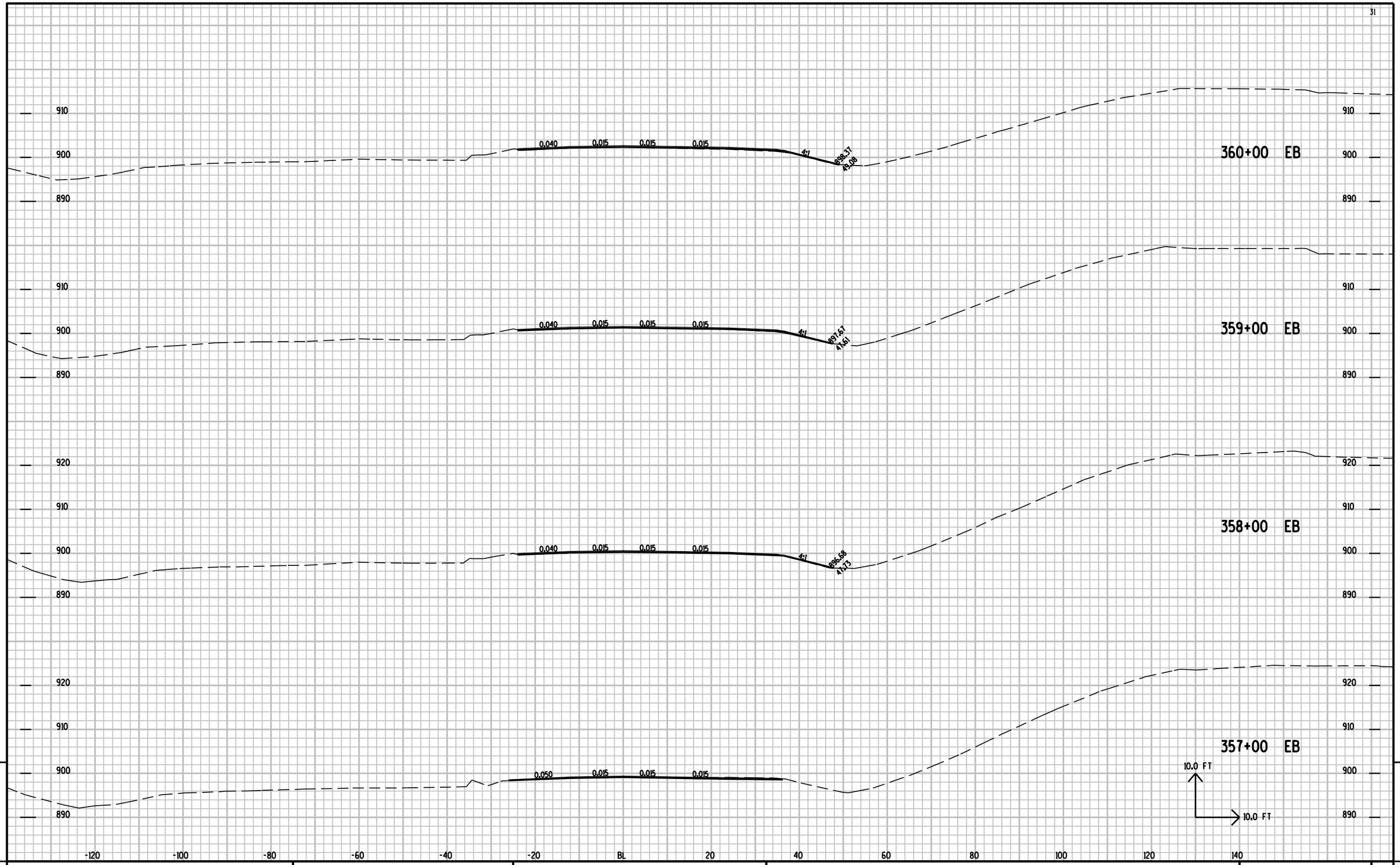

9

9

PROJECT NO: 1010-00-72	HWY: IH 39	COUNTY: DANE	CROSS SECTIONS: EB LANES	SHEET NO:	E

FILE NAME : r:\Support\CADDS\Projects\d1_10100072\090201_XS.DGN PLOT DATE : 25-APR-2012 10:10 PLOT BY : DOTJ3J PLOT NAME : PLOT SCALE : 2.000000:1.000000

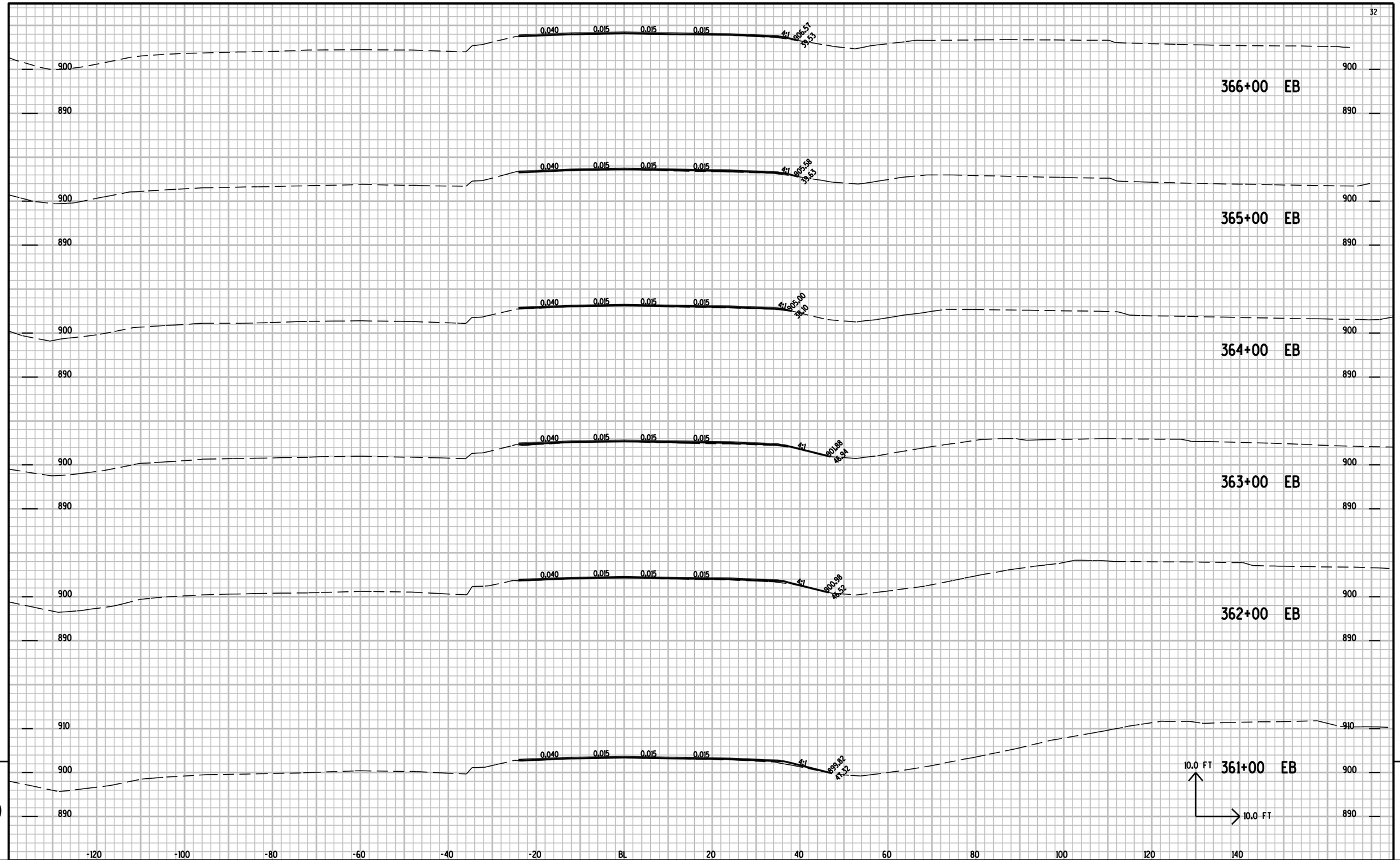

9

9

PROJECT NO: 1010-00-72	HWY: IH 39	COUNTY: DANE	CROSS SECTIONS: EB LANES	SHEET NO:	E

FILE NAME : r:\Support\CADDS\Projects\d1_10100072\090201_XS.DGN PLOT DATE : 25-APR-2012 10:10 PLOT BY : DOTJ3J PLOT NAME : PLOT SCALE : 2.000000:1.000000

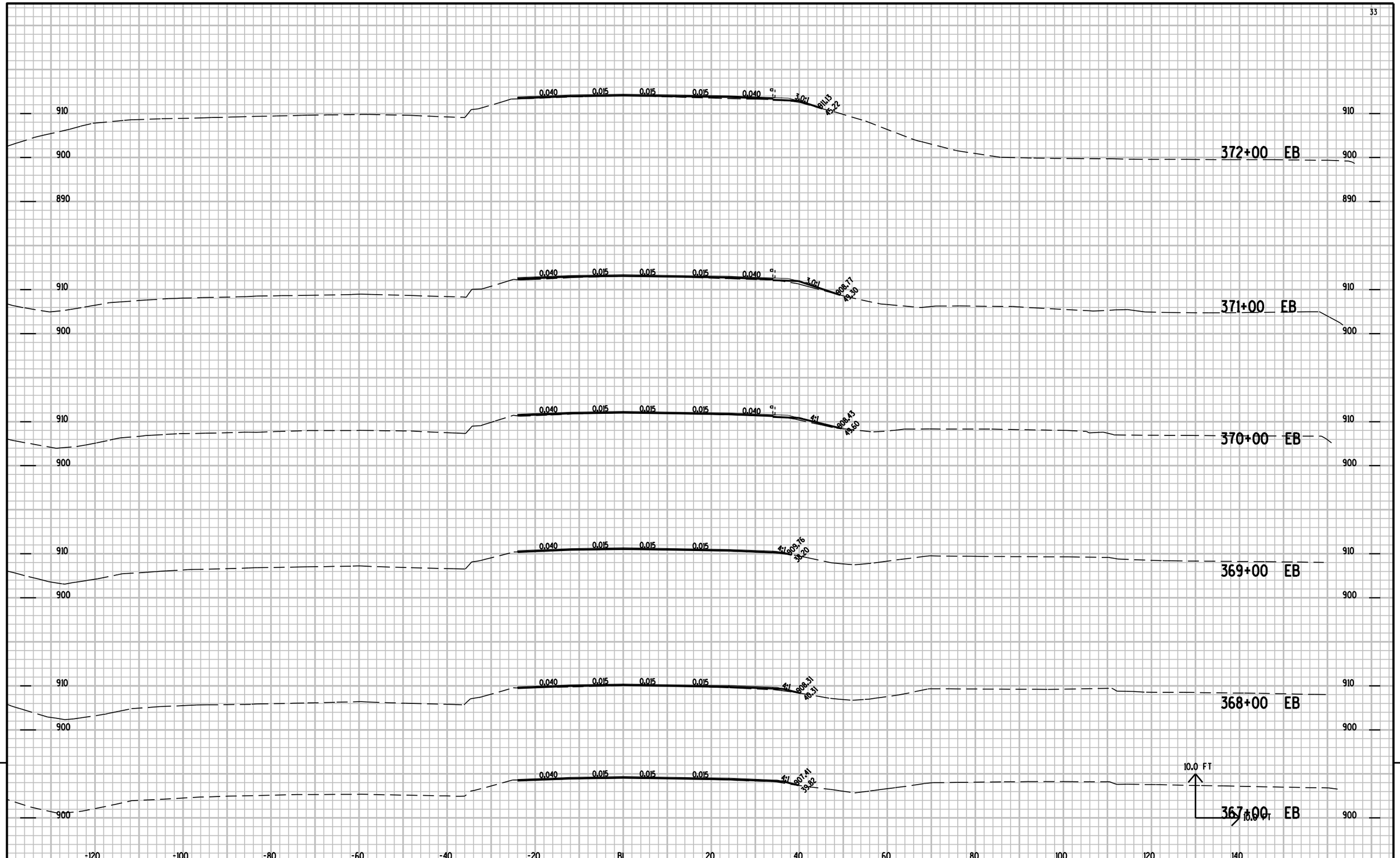

9

9

PROJECT NO: 1010-00-72	HWY: IH 39	COUNTY: DANE	CROSS SECTIONS: EB LANES	SHEET NO:	E

FILE NAME : r:\Support\CADDS\Projects\d1_10100072\090201_XS.DGN PLOT DATE : 25-APR-2012 10:10 PLOT BY : DOTJ3J PLOT NAME : PLOT SCALE : 2.000000:1.000000

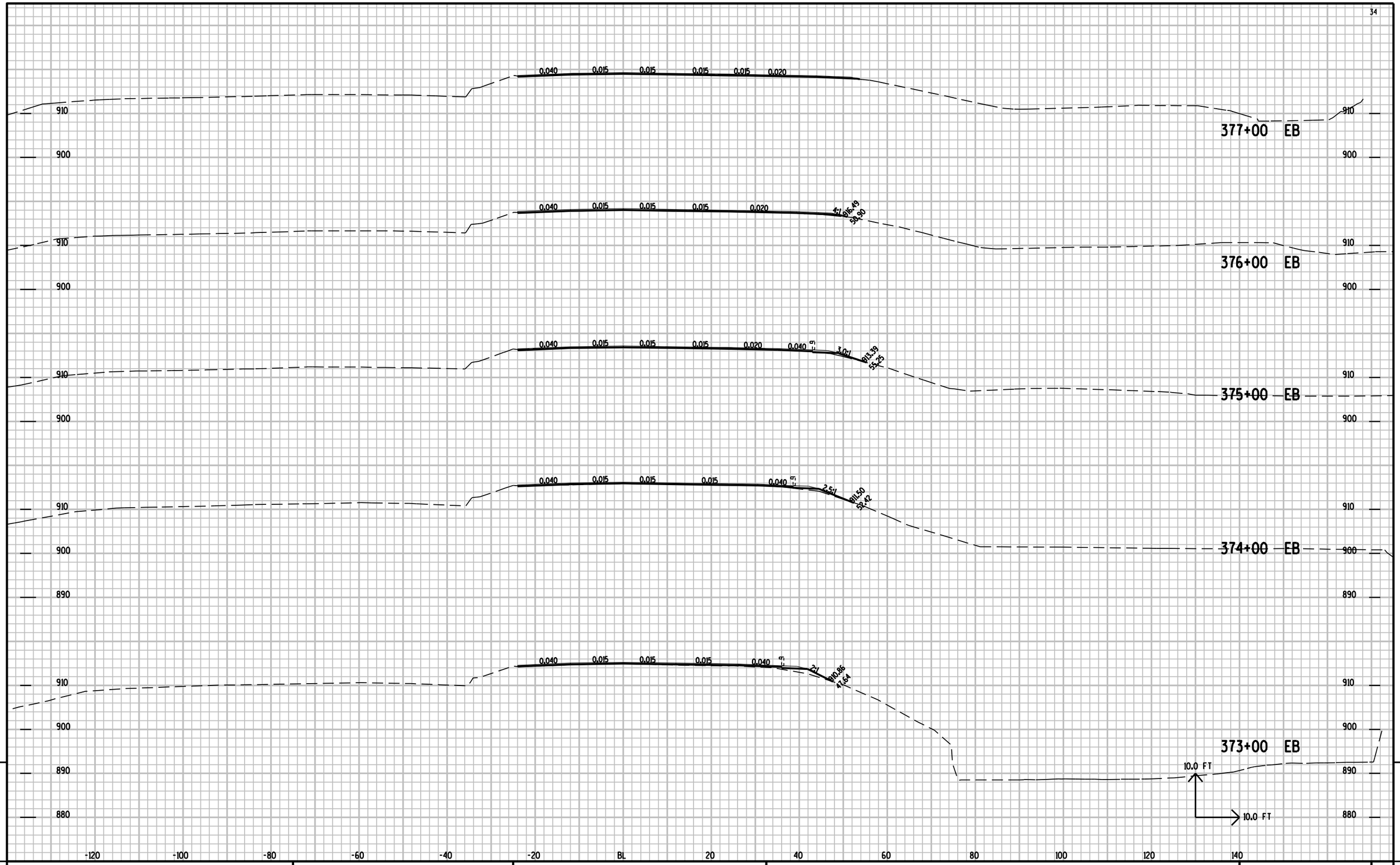

9

9

PROJECT NO: 1010-00-72	HWY: IH 39	COUNTY: DANE	CROSS SECTIONS: EB LANES	SHEET NO:	E

FILE NAME : r:\Support\CADDS\Projects\d1_10100072\090201_XS.DGN PLOT DATE : 25-APR-2012 10:10 PLOT BY : DOTJ3J PLOT NAME : PLOT SCALE : 2.000000:1.000000

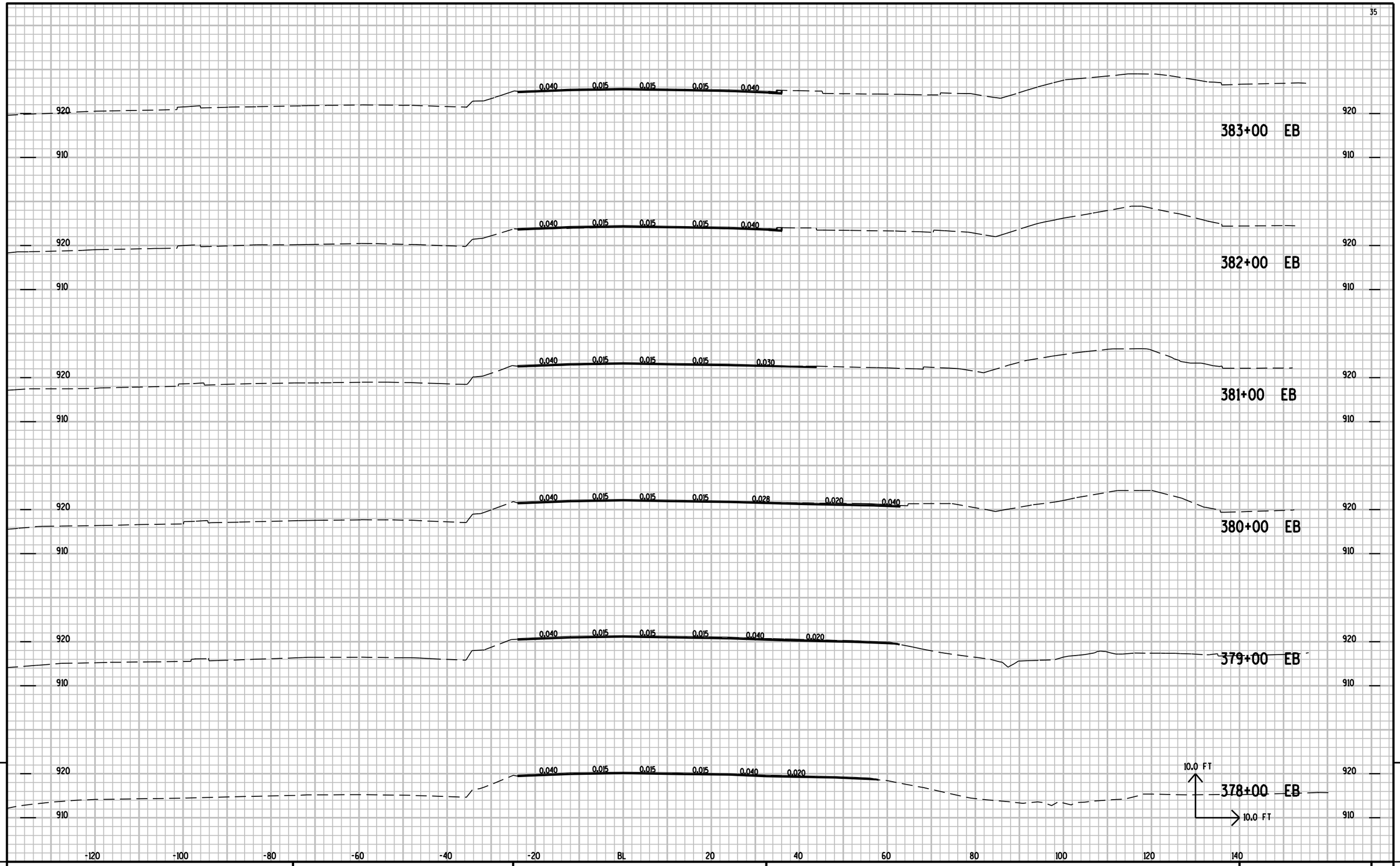

9 9

PROJECT NO: 1010-00-72	HWY: IH 39	COUNTY: DANE	CROSS SECTIONS: EB LANES	SHEET NO:	E

FILE NAME : r:\Support\CADDS\Projects\d1_10100072\090201_XS.DGN PLOT DATE : 25-APR-2012 10:10 PLOT BY : DOTJ3J PLOT NAME : PLOT SCALE : 2.000000:1.000000

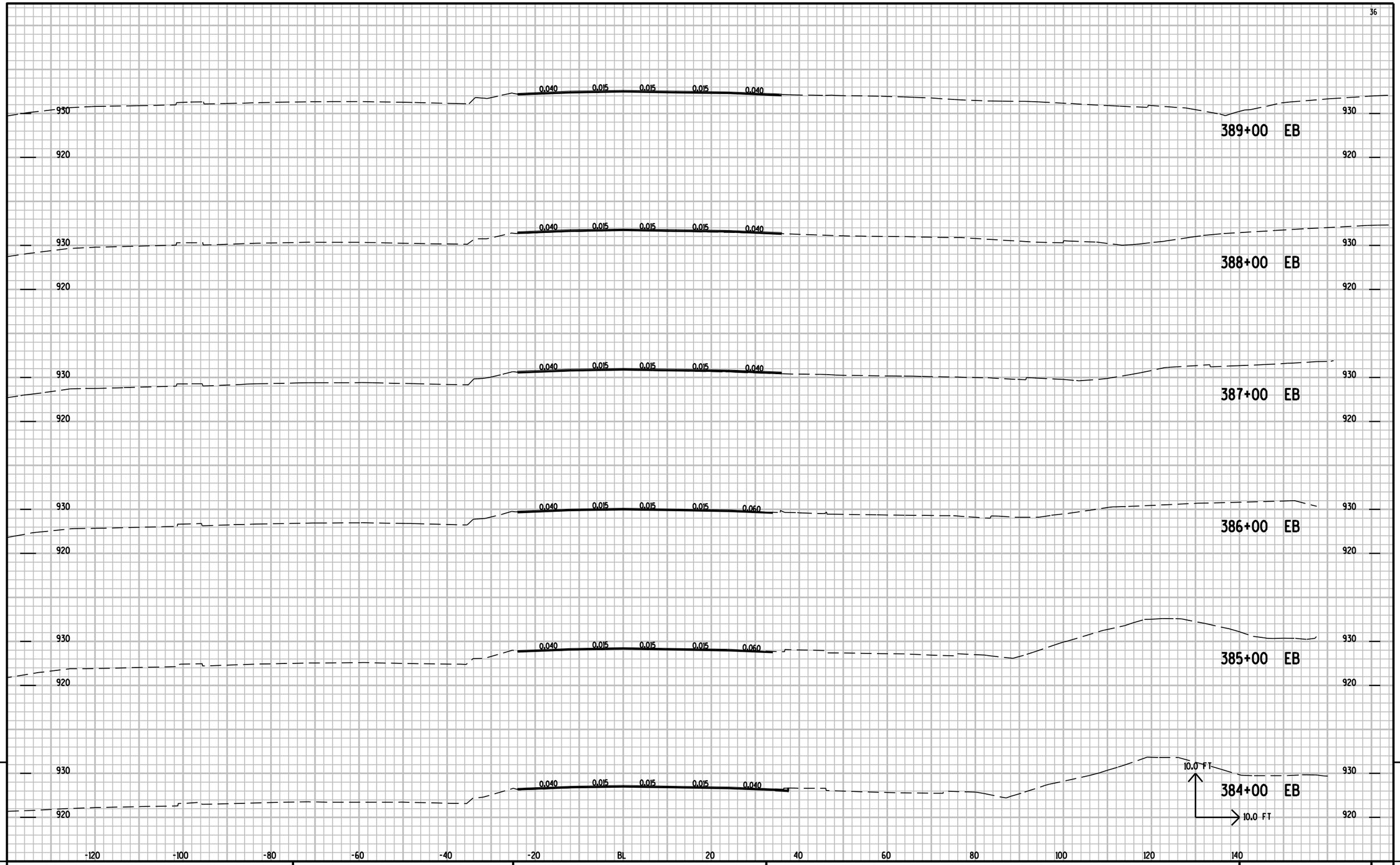

9

9

PROJECT NO: 1010-00-72	HWY: IH 39	COUNTY: DANE	CROSS SECTIONS: EB LANES	SHEET NO:	E

FILE NAME : r:\Support\CADDS\Projects\d1_10100072\090201_XS.DGN PLOT DATE : 25-APR-2012 10:11 PLOT BY : DOTJ3J PLOT NAME : PLOT SCALE : 2.000000:1.000000

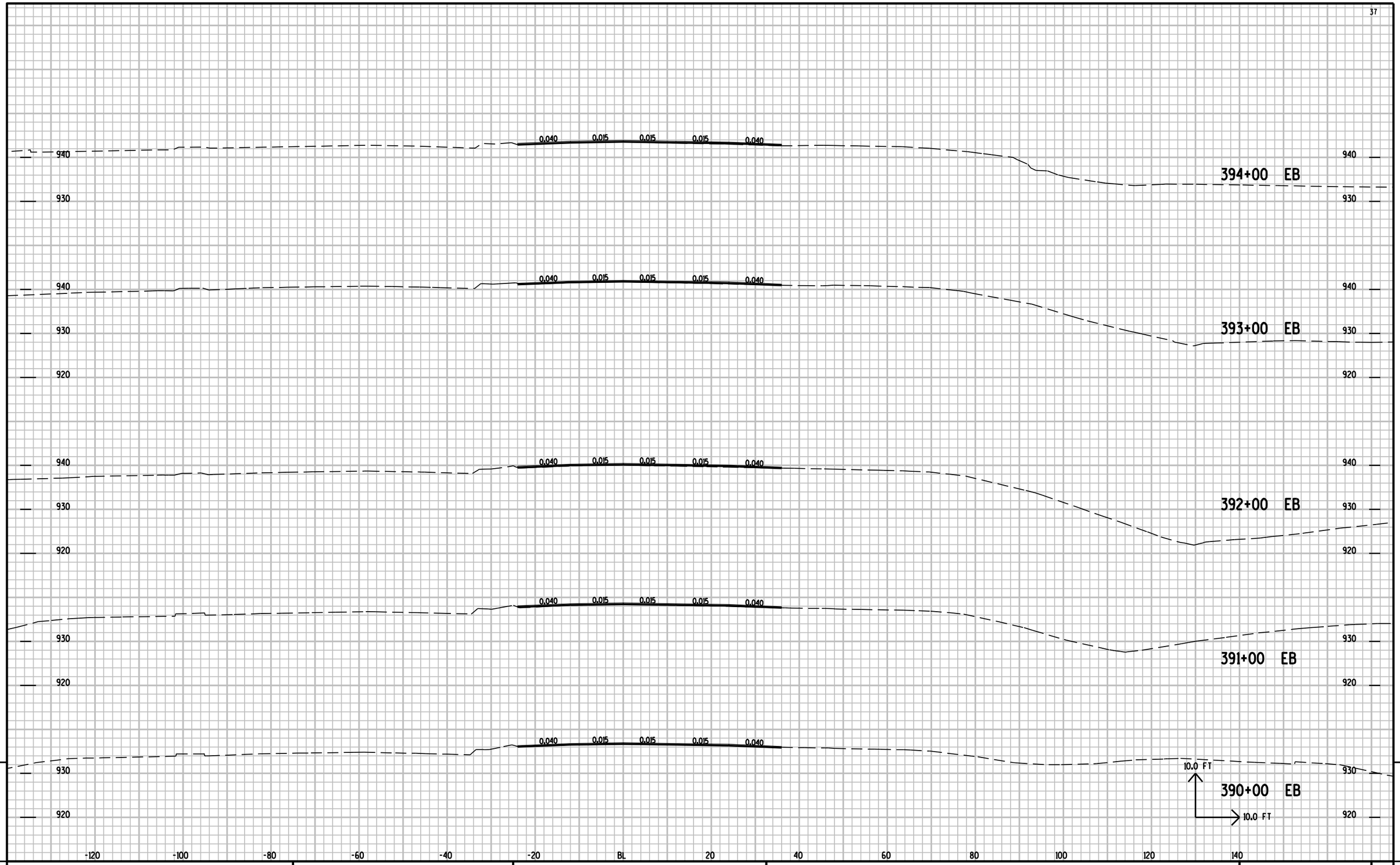

9

9

PROJECT NO: 1010-00-72	HWY: IH 39	COUNTY: DANE	CROSS SECTIONS: EB LANES	SHEET NO:	E

FILE NAME : r:\Support\CADDS\Projects\d1_10100072\090201_XS.DGN PLOT DATE : 25-APR-2012 10:11 PLOT BY : DOTJ3J PLOT NAME : PLOT SCALE : 2.000000:1.000000

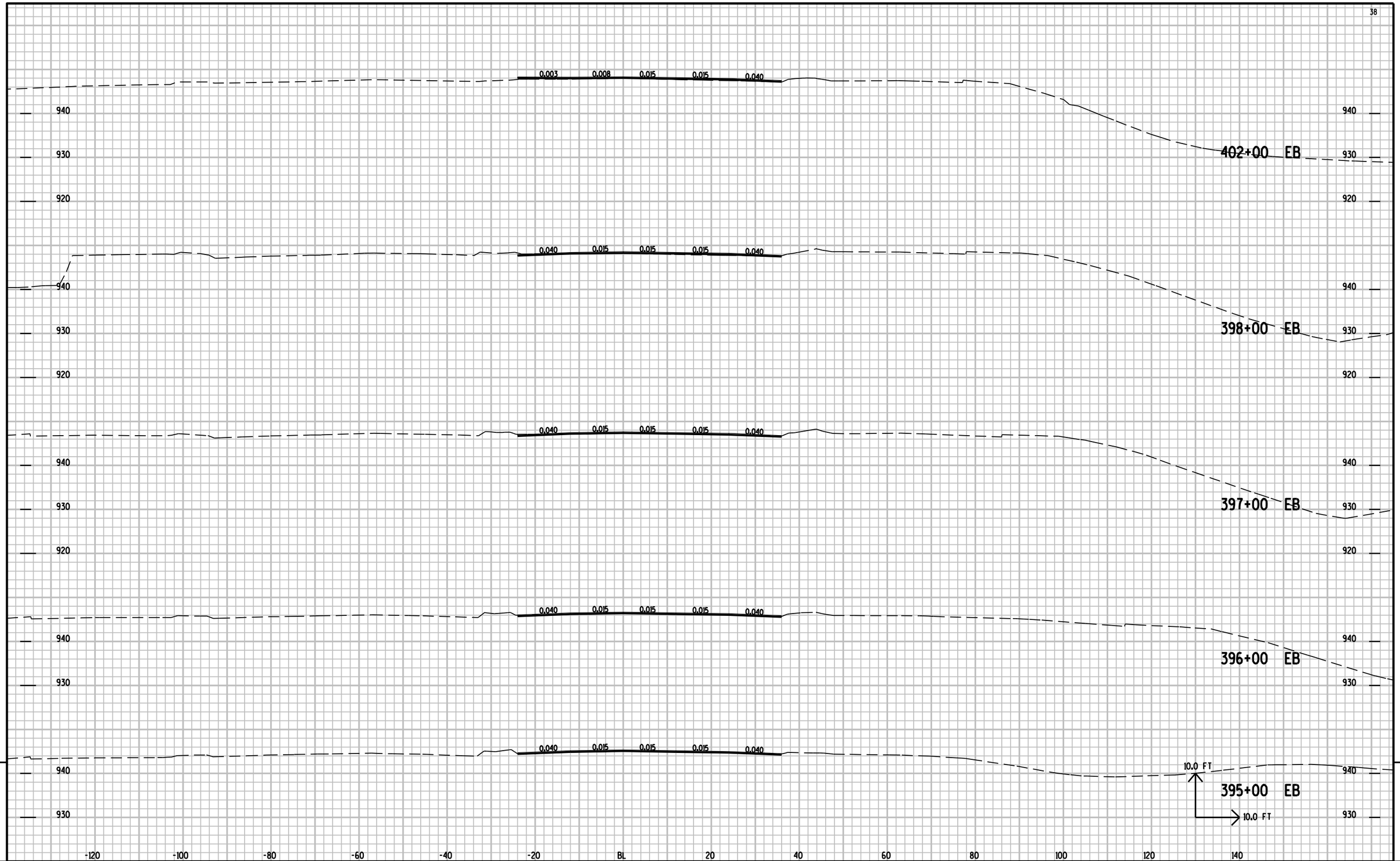

9

9

PROJECT NO: 1010-00-72	HWY: IH 39	COUNTY: DANE	CROSS SECTIONS: EB LANES	SHEET NO:	E

FILE NAME : r:\Support\CADDS\Projects\d1_10100072\090201_XS.DGN PLOT DATE : 25-APR-2012 10:11 PLOT BY : DOTJ3J PLOT NAME : PLOT SCALE : 2.000000:1.000000

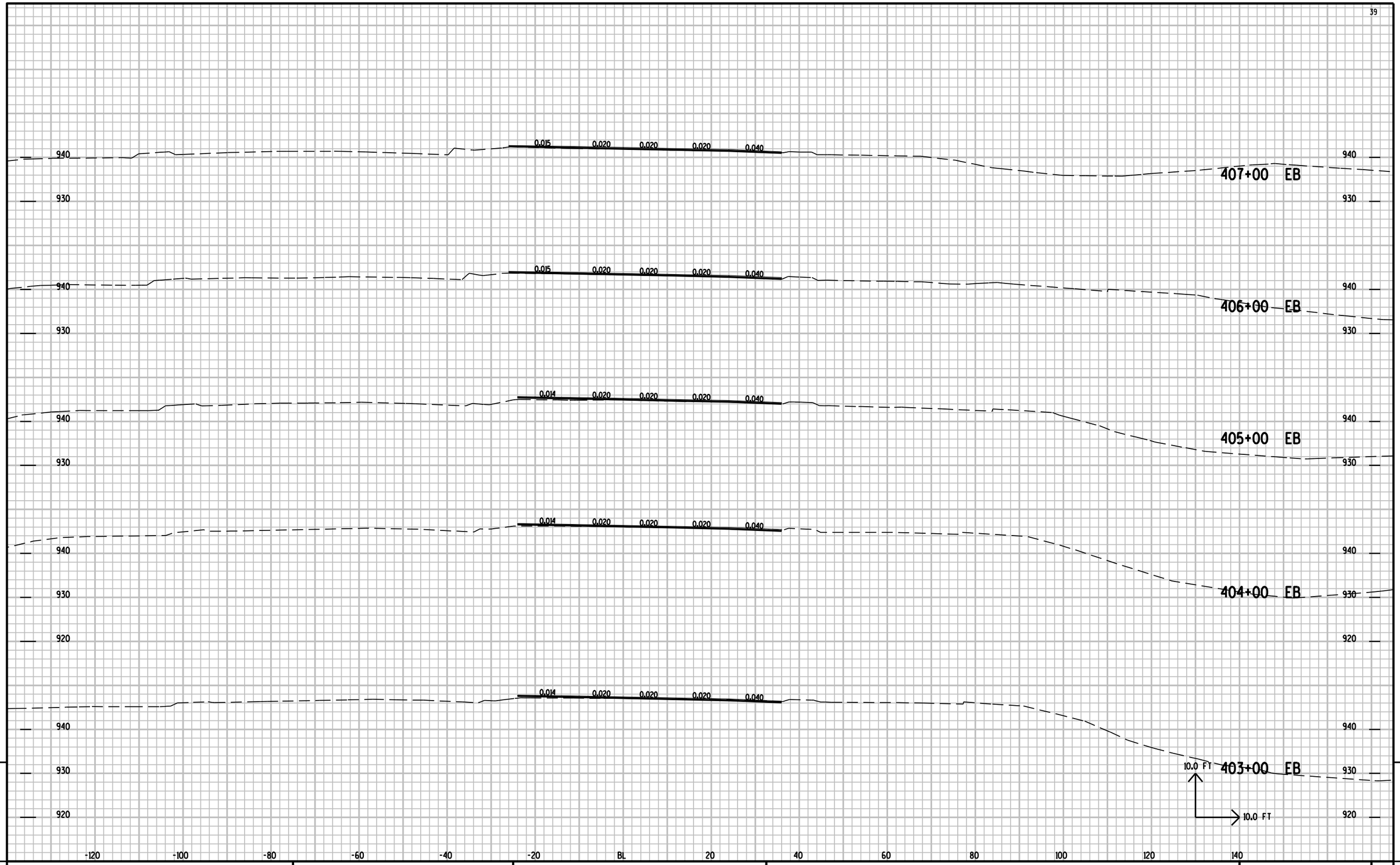

9 9

PROJECT NO: 1010-00-72	HWY: IH 39	COUNTY: DANE	CROSS SECTIONS: EB LANES	SHEET NO:	E

FILE NAME : r:\Support\CADDS\Projects\d1_10100072\090201_XS.DGN PLOT DATE : 25-APR-2012 10:11 PLOT BY : DOTJ3J PLOT NAME : PLOT SCALE : 2.000000:1.000000

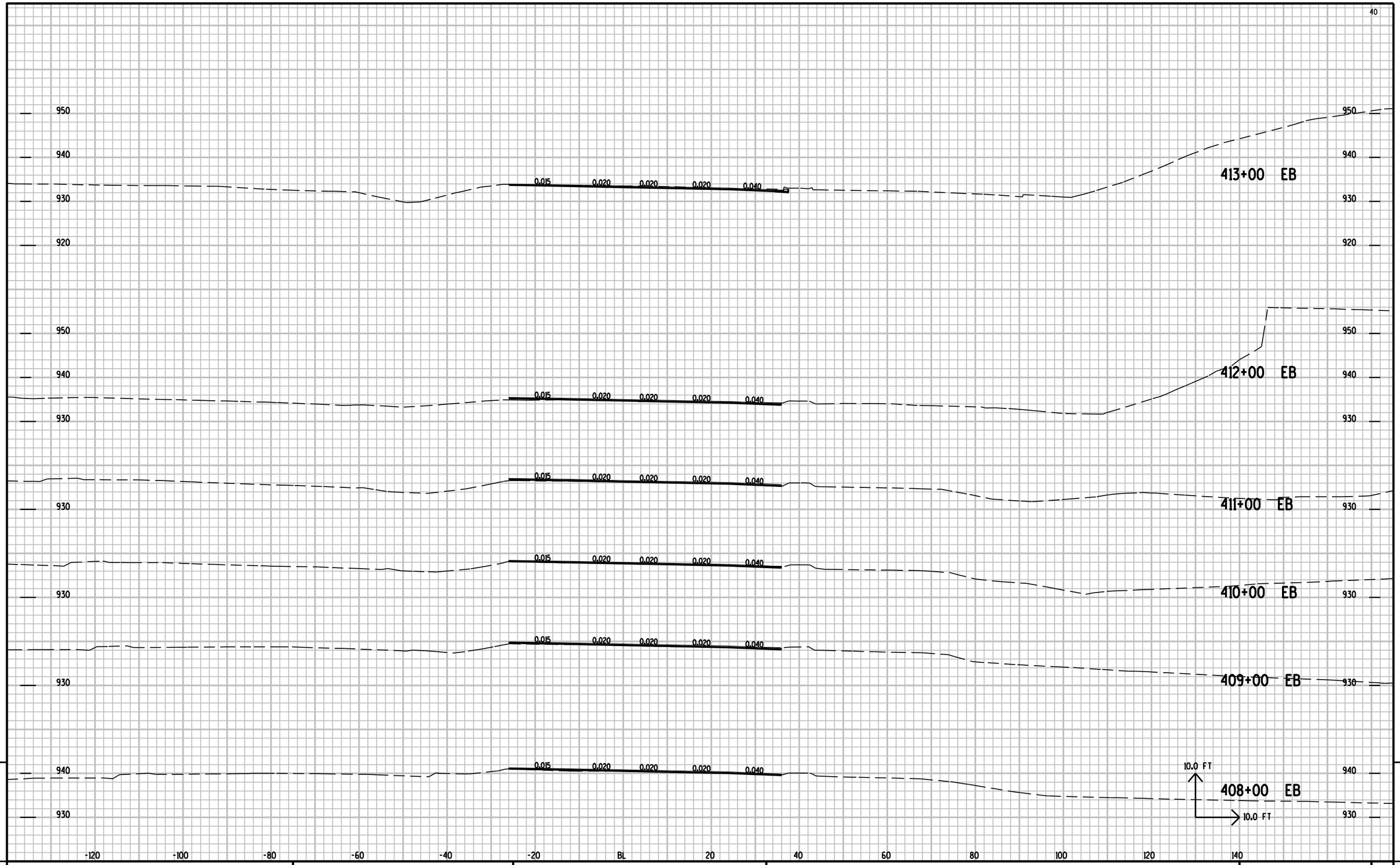

9

9

PROJECT NO: 1010-00-72	HWY: IH 39	COUNTY: DANE	CROSS SECTIONS: EB LANES	SHEET NO:	E

FILE NAME : r:\Support\CADDS\Projects\d1_10100072\090201_XS.DGN PLOT DATE : 25-APR-2012 10:12 PLOT BY : DOTJ3J PLOT NAME : PLOT SCALE : 2.000000:1.000000

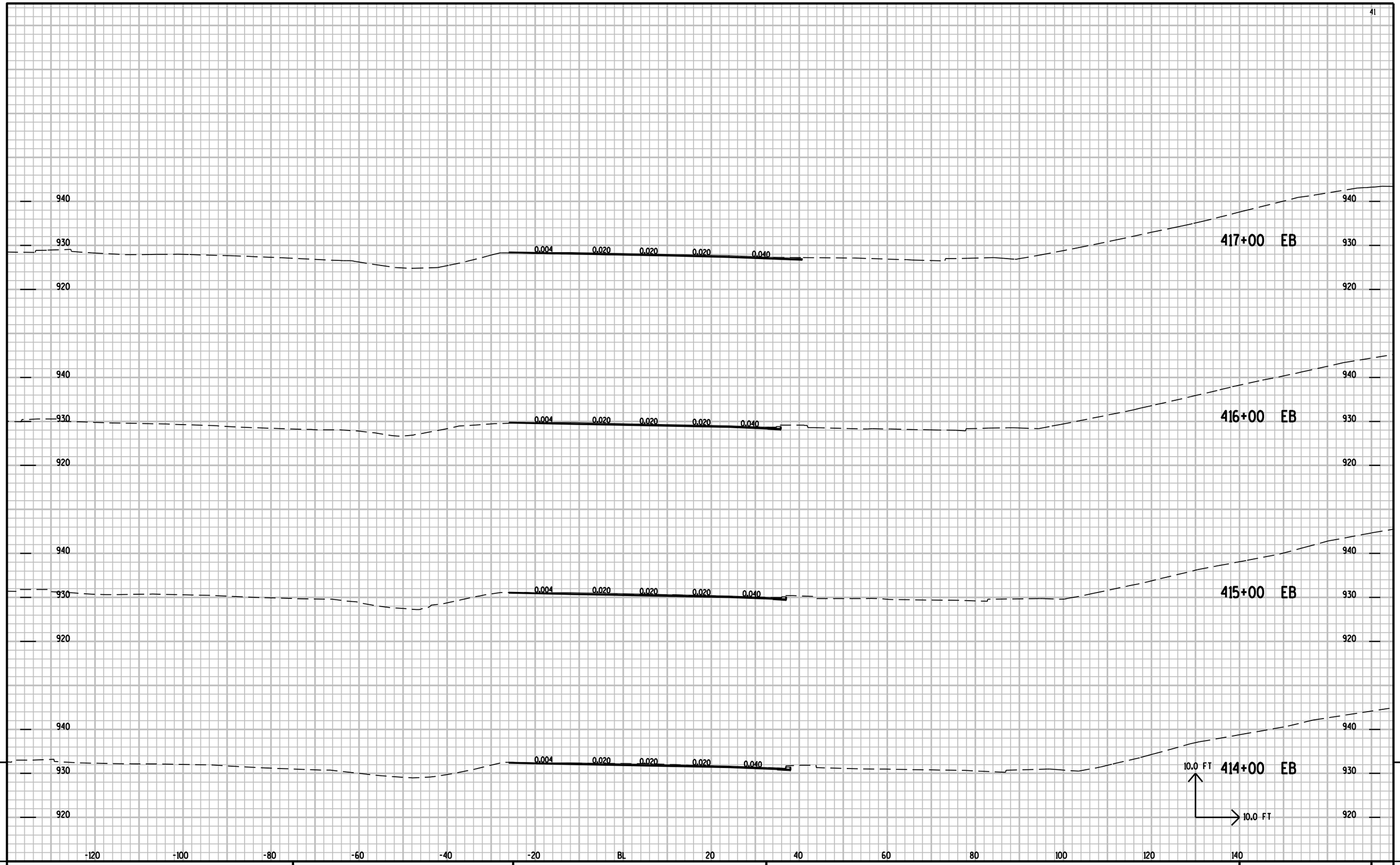

9

9

PROJECT NO: 1010-00-72	HWY: IH 39	COUNTY: DANE	CROSS SECTIONS: EB LANES	SHEET NO:	E

FILE NAME : r:\Support\CADDS\Projects\d1_10100072\090201_XS.DGN PLOT DATE : 25-APR-2012 10:12 PLOT BY : DOTJ3J PLOT NAME : PLOT SCALE : 2.000000:1.000000

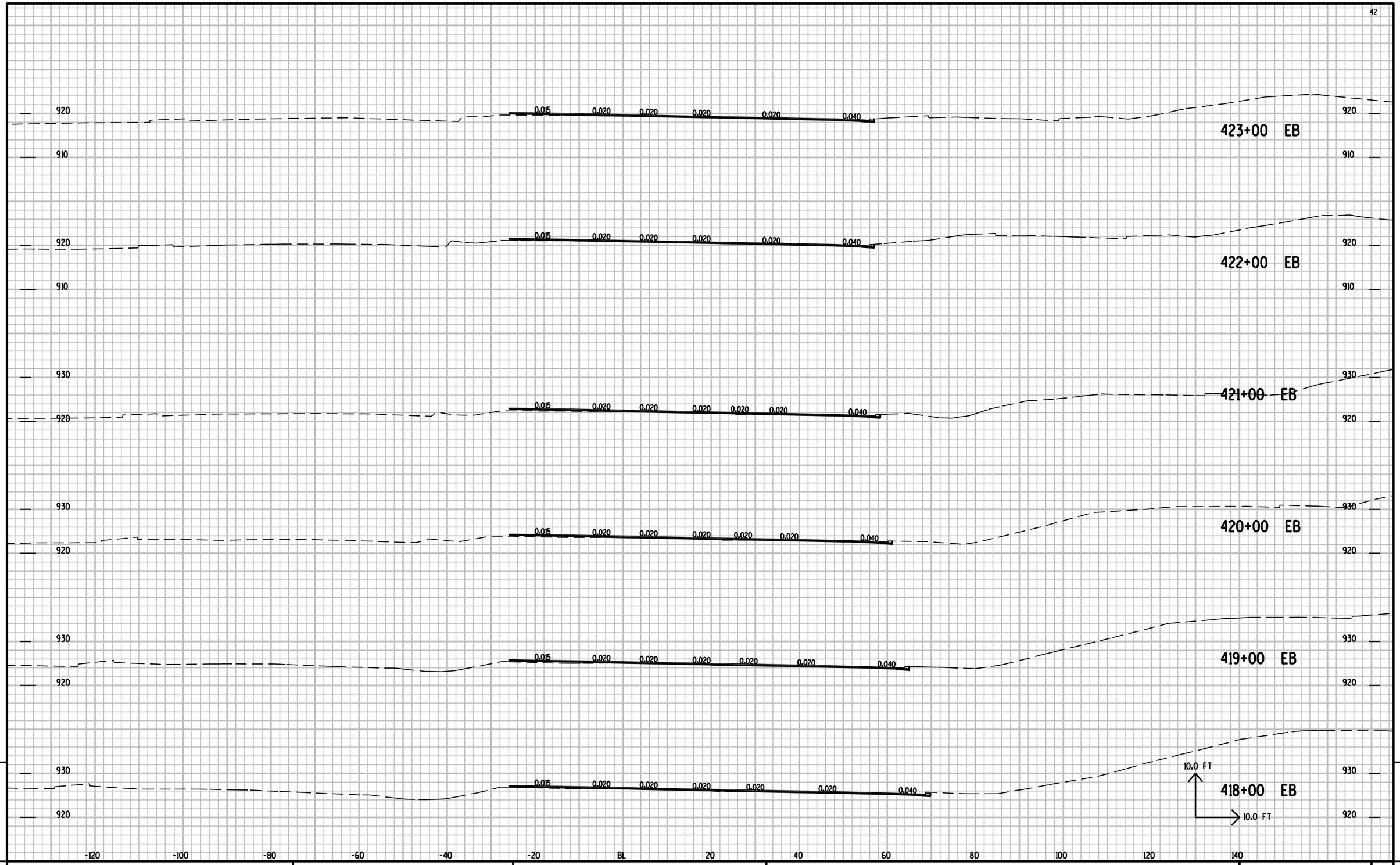

9

9

PROJECT NO: 1010-00-72	HWY: IH 39	COUNTY: DANE	CROSS SECTIONS: EB LANES	SHEET NO:	E

FILE NAME : r:\Support\CADDS\Projects\d1_10100072\090201_XS.DGN PLOT DATE : 25-APR-2012 10:12 PLOT BY : DOTJ3J PLOT NAME : PLOT SCALE : 2.000000:1.000000

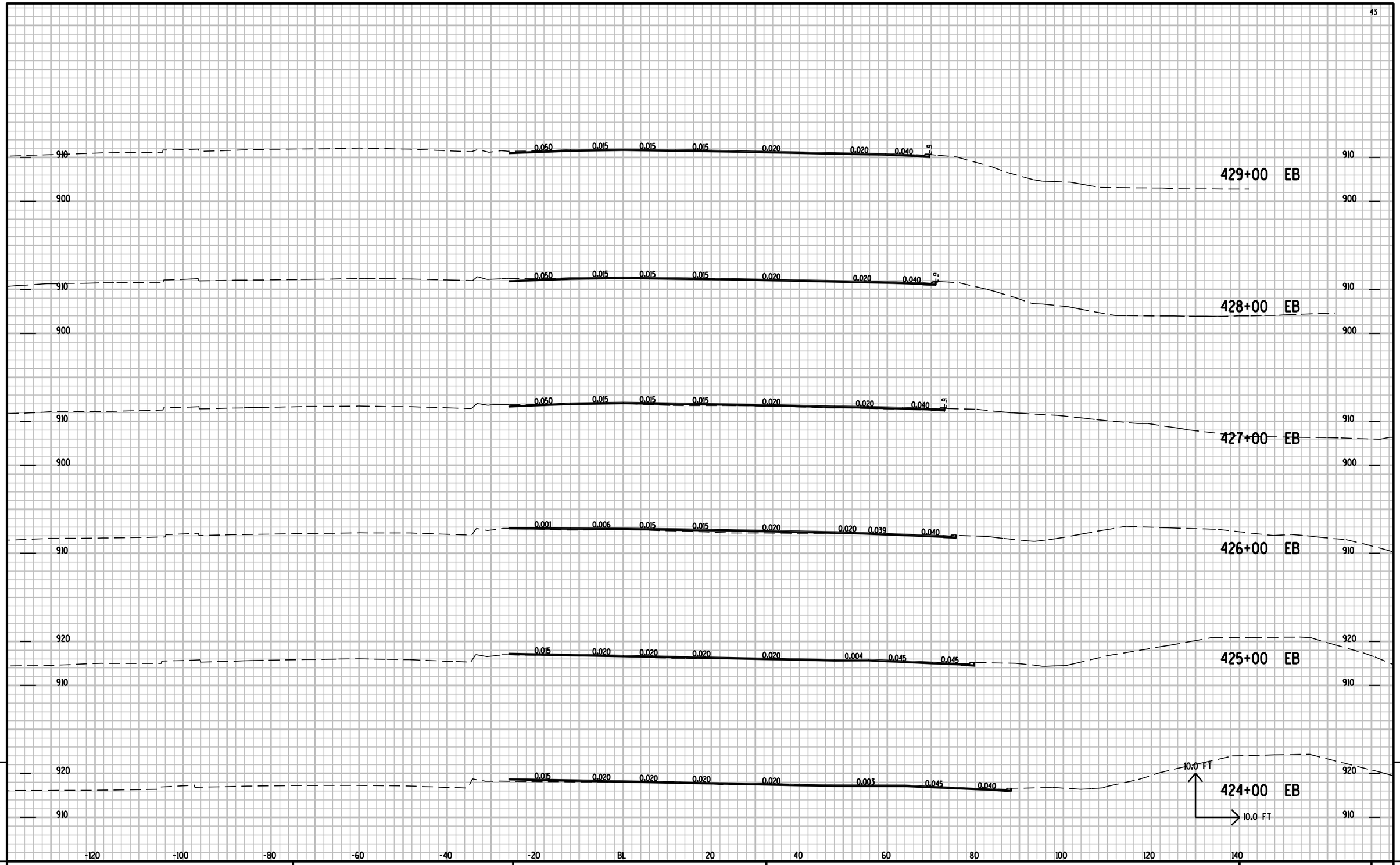

9

PROJECT NO: 1010-00-72	HWY: IH 39	COUNTY: DANE	CROSS SECTIONS: EB LANES	SHEET NO:	E

FILE NAME : r:\Support\CADDS\Projects\d1_10100072\090201_XS.DGN PLOT DATE : 25-APR-2012 10:12 PLOT BY : DOTJ3J PLOT NAME : PLOT SCALE : 2.000000:1.000000

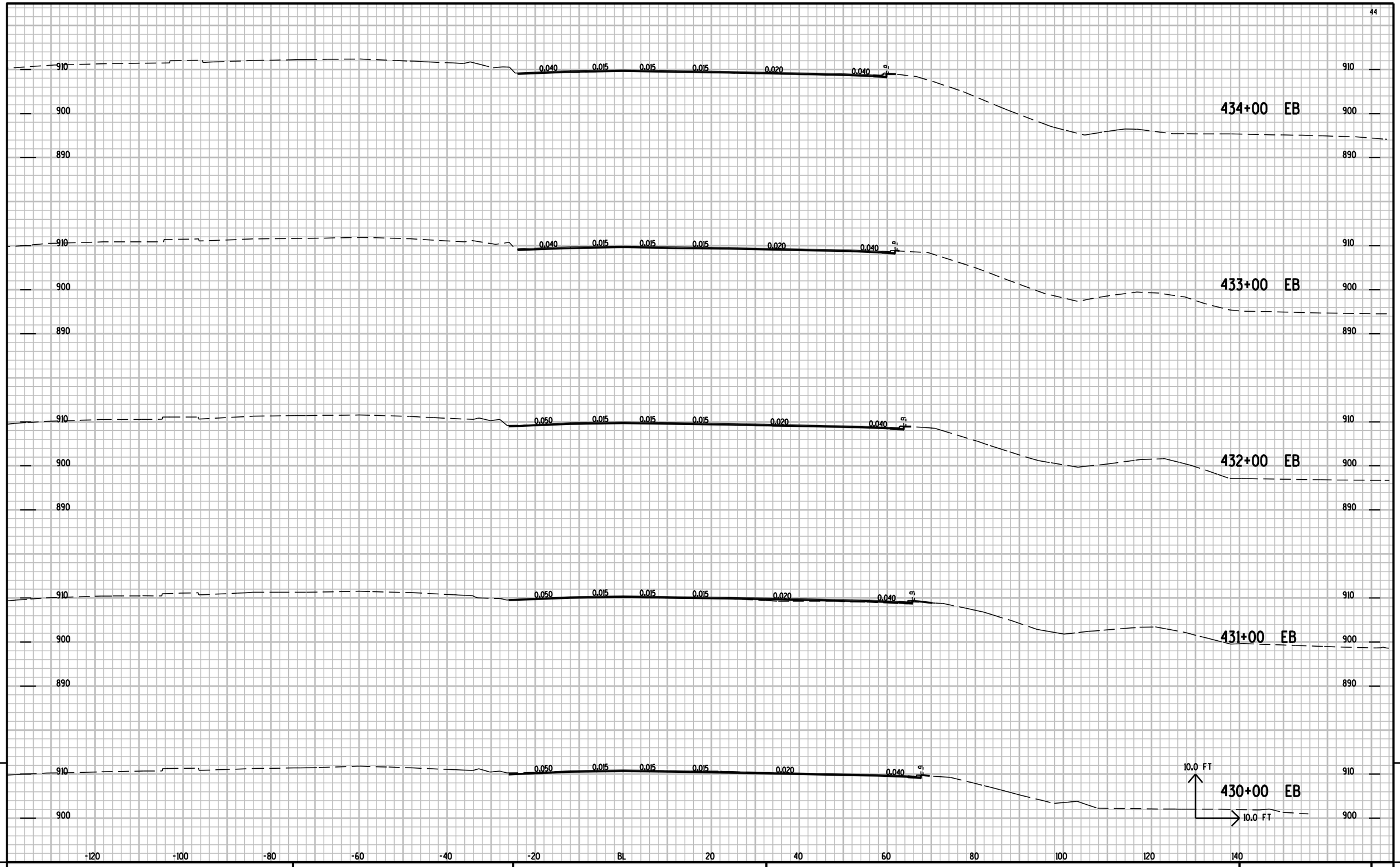

9

PROJECT NO: 1010-00-72	HWY: IH 39	COUNTY: DANE	CROSS SECTIONS: EB LANES	SHEET NO:	E

FILE NAME : r:\Support\CADDS\Projects\d1_10100072\090201_XS.DGN PLOT DATE : 25-APR-2012 10:12 PLOT BY : DOTJ3J PLOT NAME : PLOT SCALE : 2.000000:1.000000

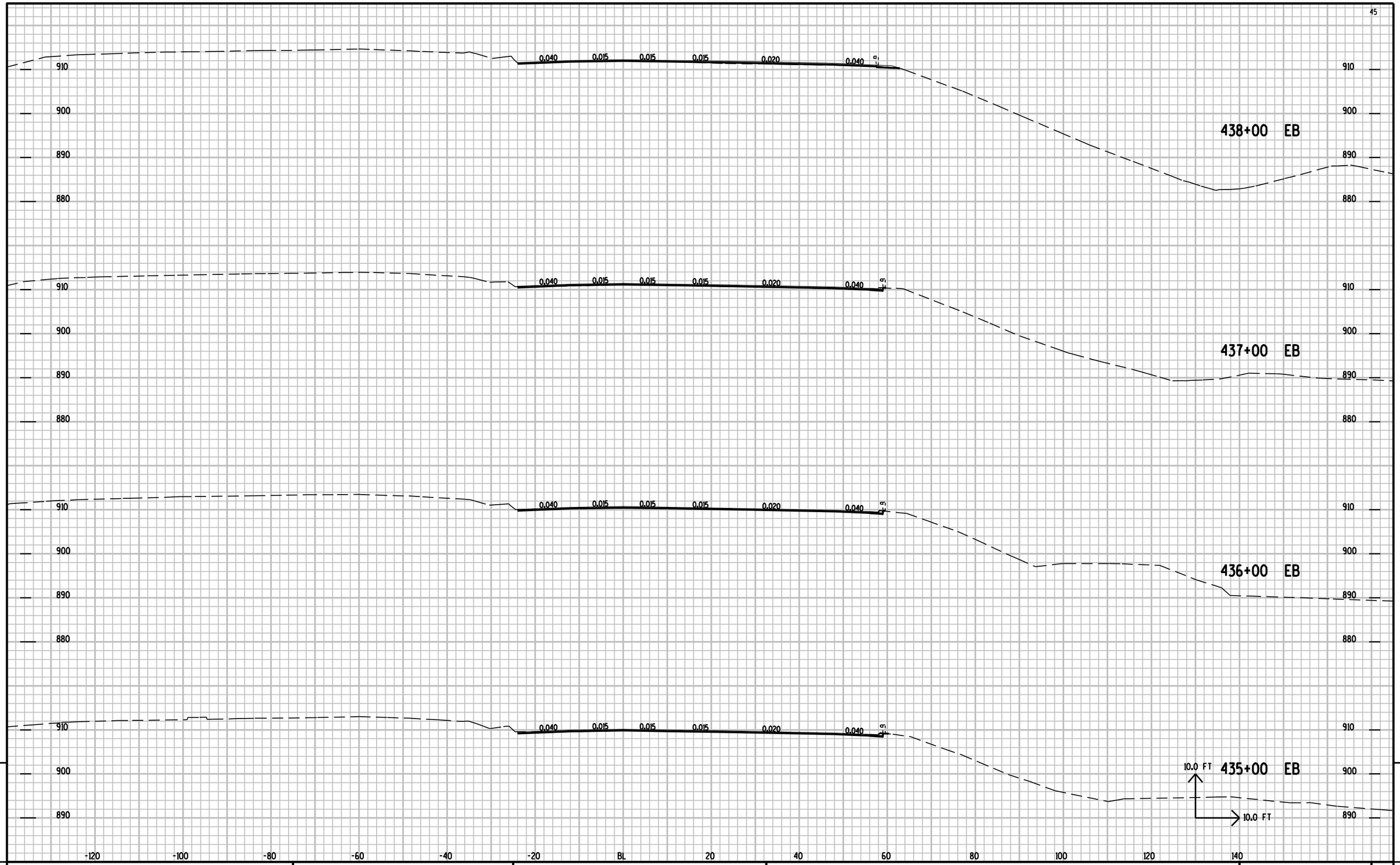

9

9

PROJECT NO: 1010-00-72	HWY: IH 39	COUNTY: DANE	CROSS SECTIONS: EB LANES	SHEET NO:	E

FILE NAME : r:\Support\CADDS\Projects\d1_10100072\090201_XS.DGN PLOT DATE : 25-APR-2012 10:13 PLOT BY : DOTJ3J PLOT NAME : PLOT SCALE : 2.000000:1.000000

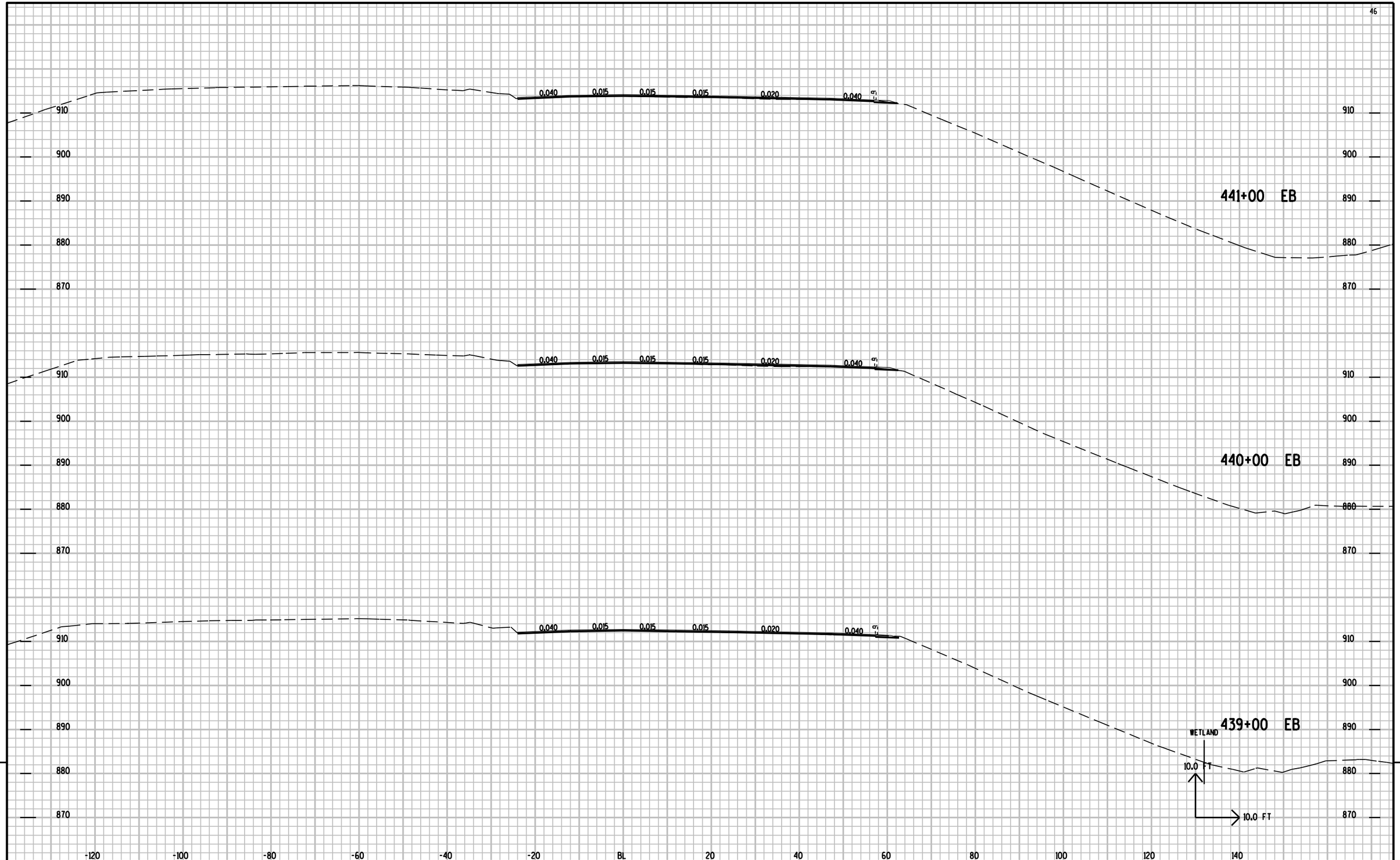

PROJECT NO: 1010-00-72	HWY: IH 39	COUNTY: DANE	CROSS SECTIONS: EB LANES	SHEET NO:	E

FILE NAME : r:\Support\CADDS\Projects\d1_10100072\090201_XS.DGN PLOT DATE : 25-APR-2012 10:13 PLOT BY : DOTJ3J PLOT NAME : PLOT SCALE : 2.000000:1.000000

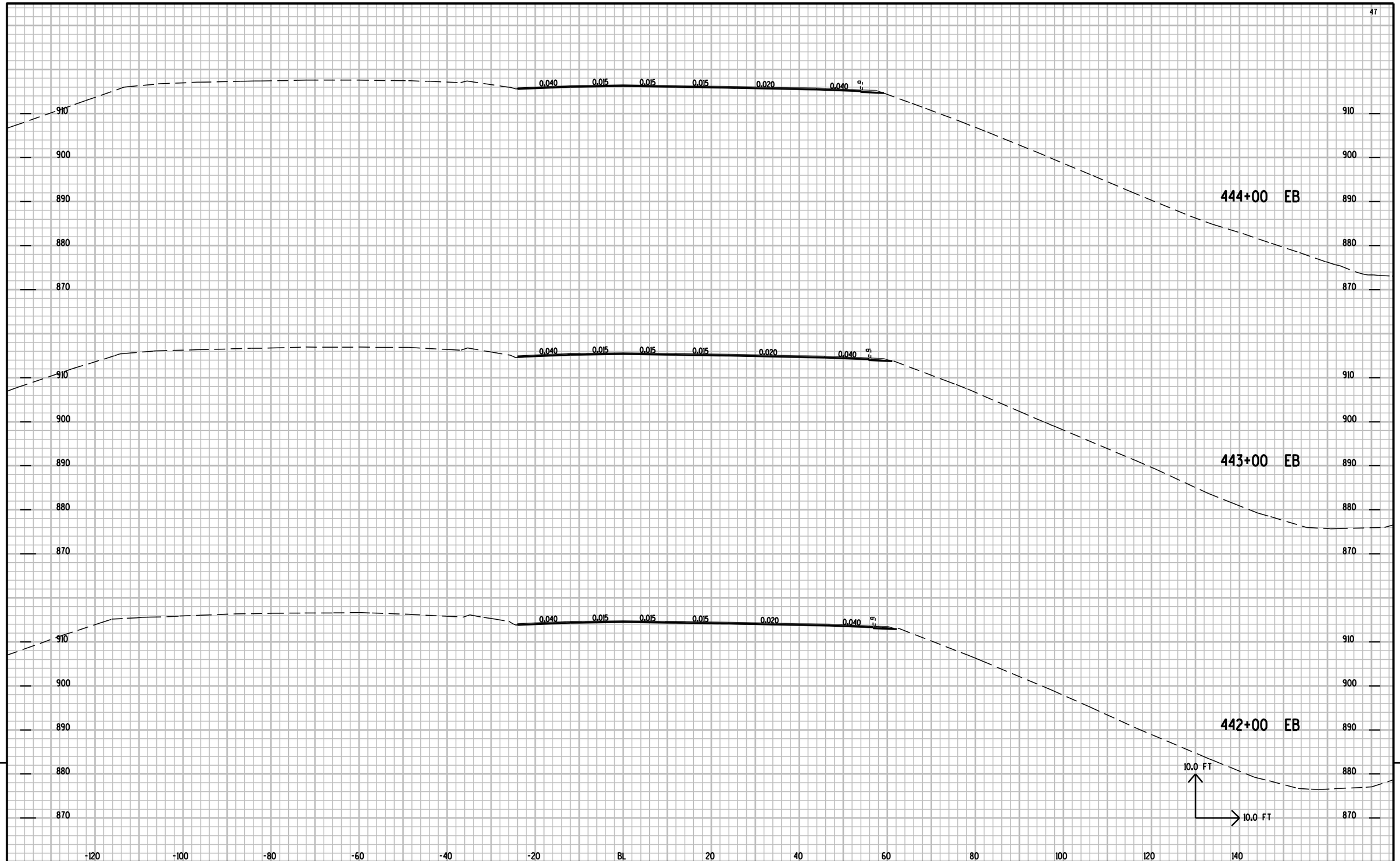

9

9

PROJECT NO: 1010-00-72	HWY: IH 39	COUNTY: DANE	CROSS SECTIONS: EB LANES	SHEET NO:	E

FILE NAME : r:\Support\CADDS\Projects\d1_10100072\090201_XS.DGN PLOT DATE : 25-APR-2012 10:13 PLOT BY : DOTJ3J PLOT NAME : PLOT SCALE : 2.000000:1.000000

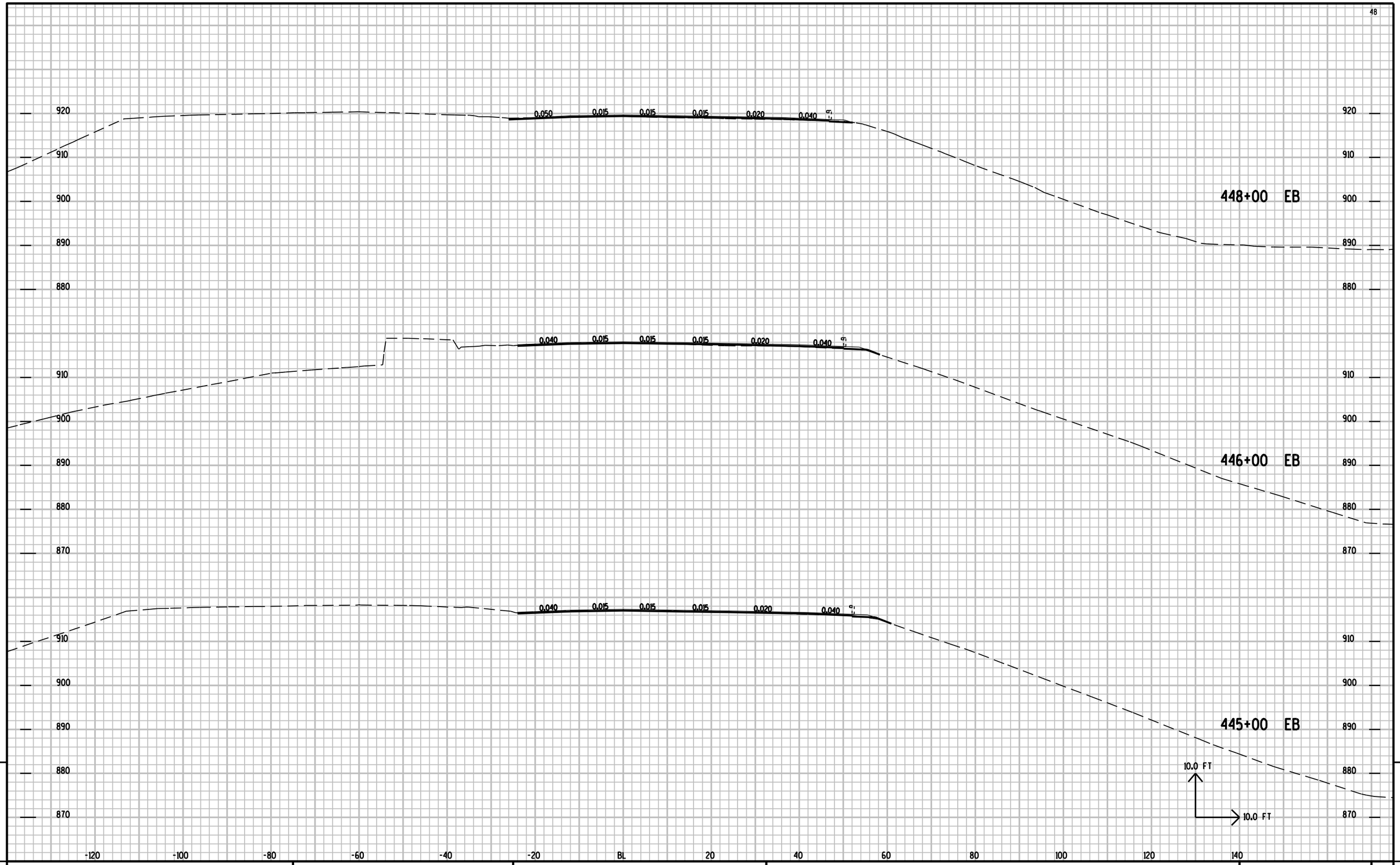

9

9

PROJECT NO: 1010-00-72	HWY: IH 39	COUNTY: DANE	CROSS SECTIONS: EB LANES	SHEET NO:	E

FILE NAME : r:\Support\CADDS\Projects\d1_10100072\090201_XS.DGN PLOT DATE : 25-APR-2012 10:13 PLOT BY : DOTJ3J PLOT NAME : PLOT SCALE : 2.000000:1.000000

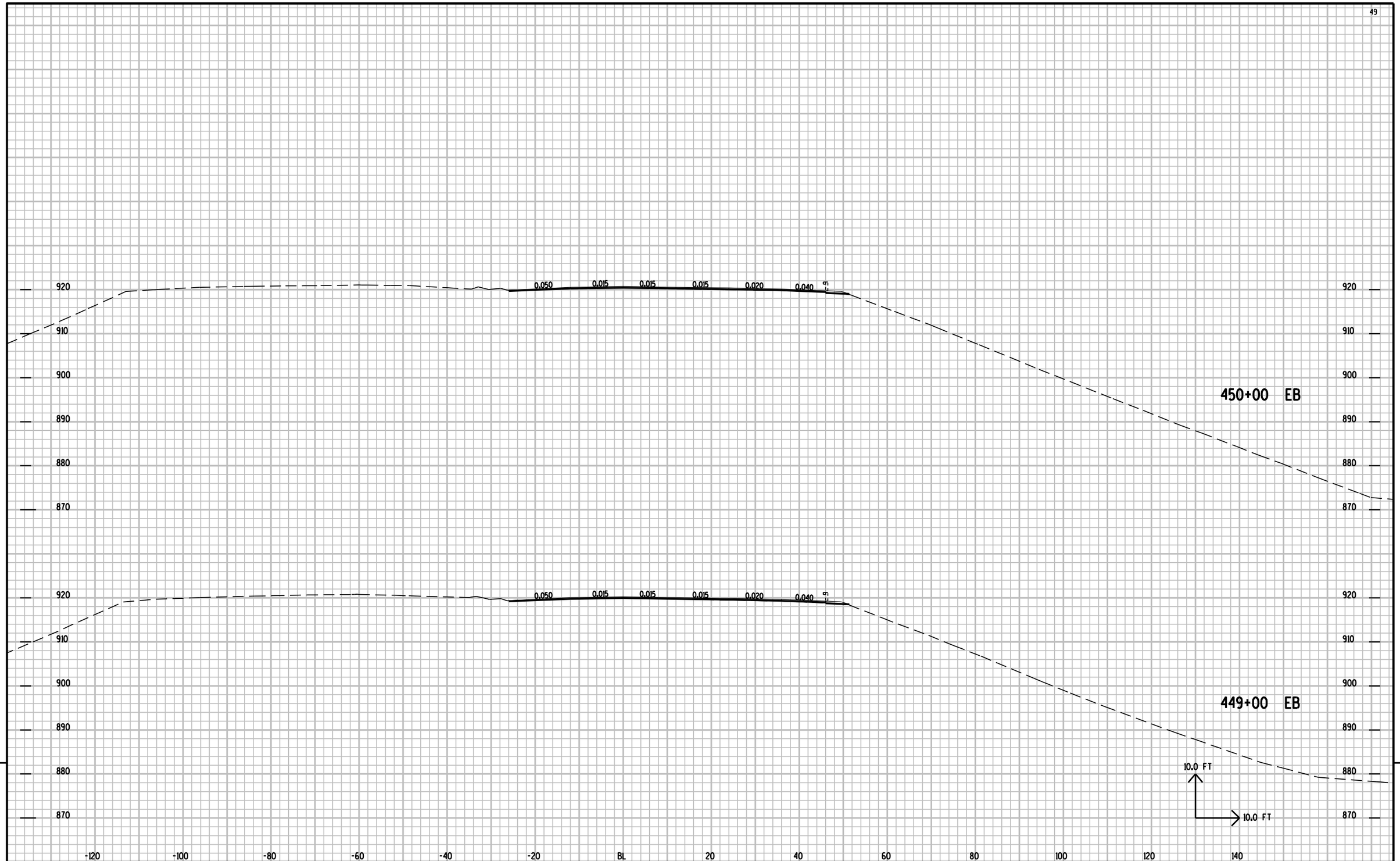

9

9

PROJECT NO: 1010-00-72	HWY: IH 39	COUNTY: DANE	CROSS SECTIONS: EB LANES	SHEET NO:	E

FILE NAME : r:\Support\CADDS\Projects\d1_10100072\090201_XS.DGN PLOT DATE : 25-APR-2012 10:14 PLOT BY : DOTJ3J PLOT NAME : PLOT SCALE : 2.000000:1.000000

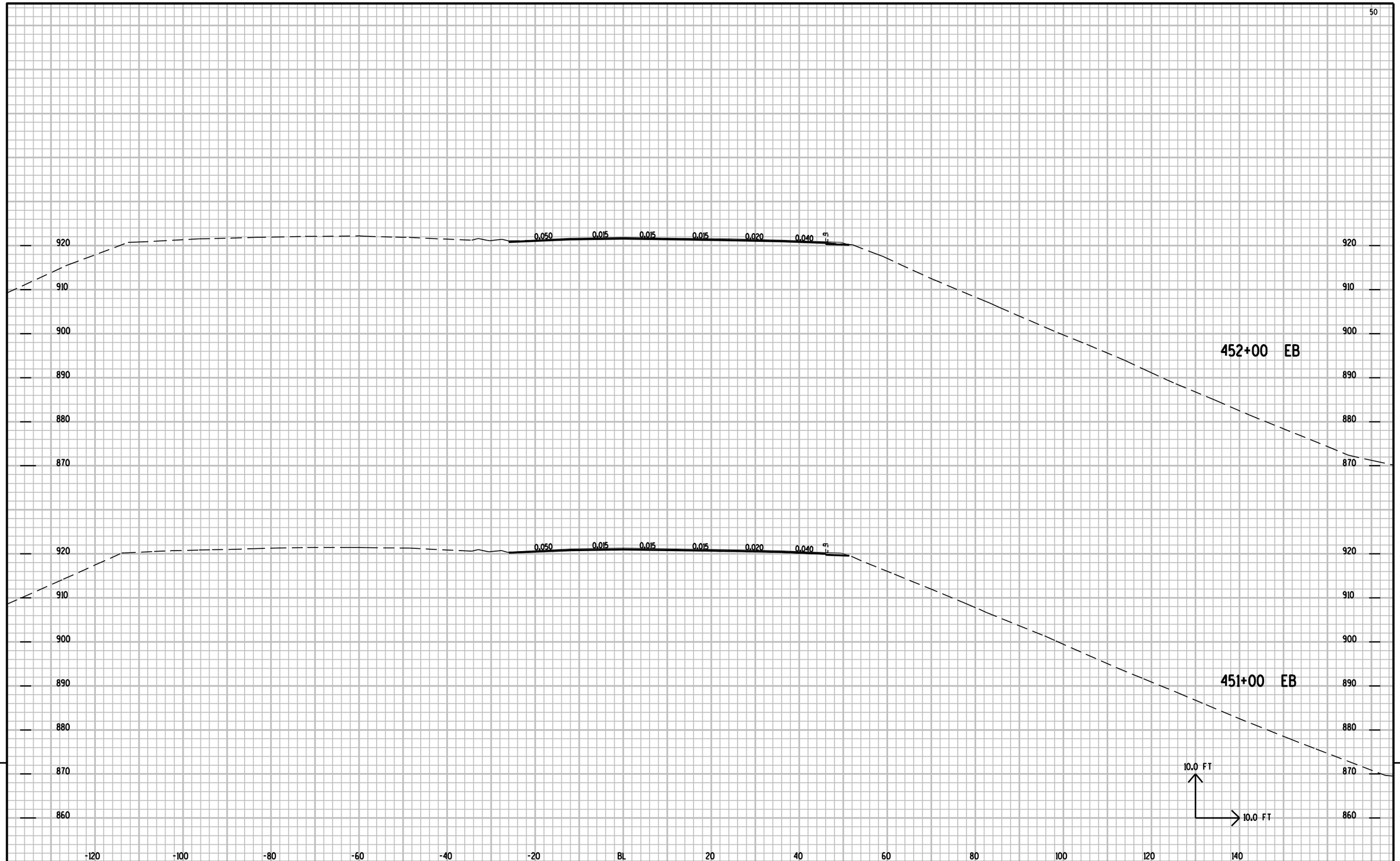

9

9

PROJECT NO: 1010-00-72	HWY: IH 39	COUNTY: DANE	CROSS SECTIONS: EB LANES	SHEET NO:	E

FILE NAME : r:\Support\CADDS\Projects\d1_10100072\090201_XS.DGN PLOT DATE : 25-APR-2012 10:14 PLOT BY : DOTJ3J PLOT NAME : PLOT SCALE : 2.000000:1.000000

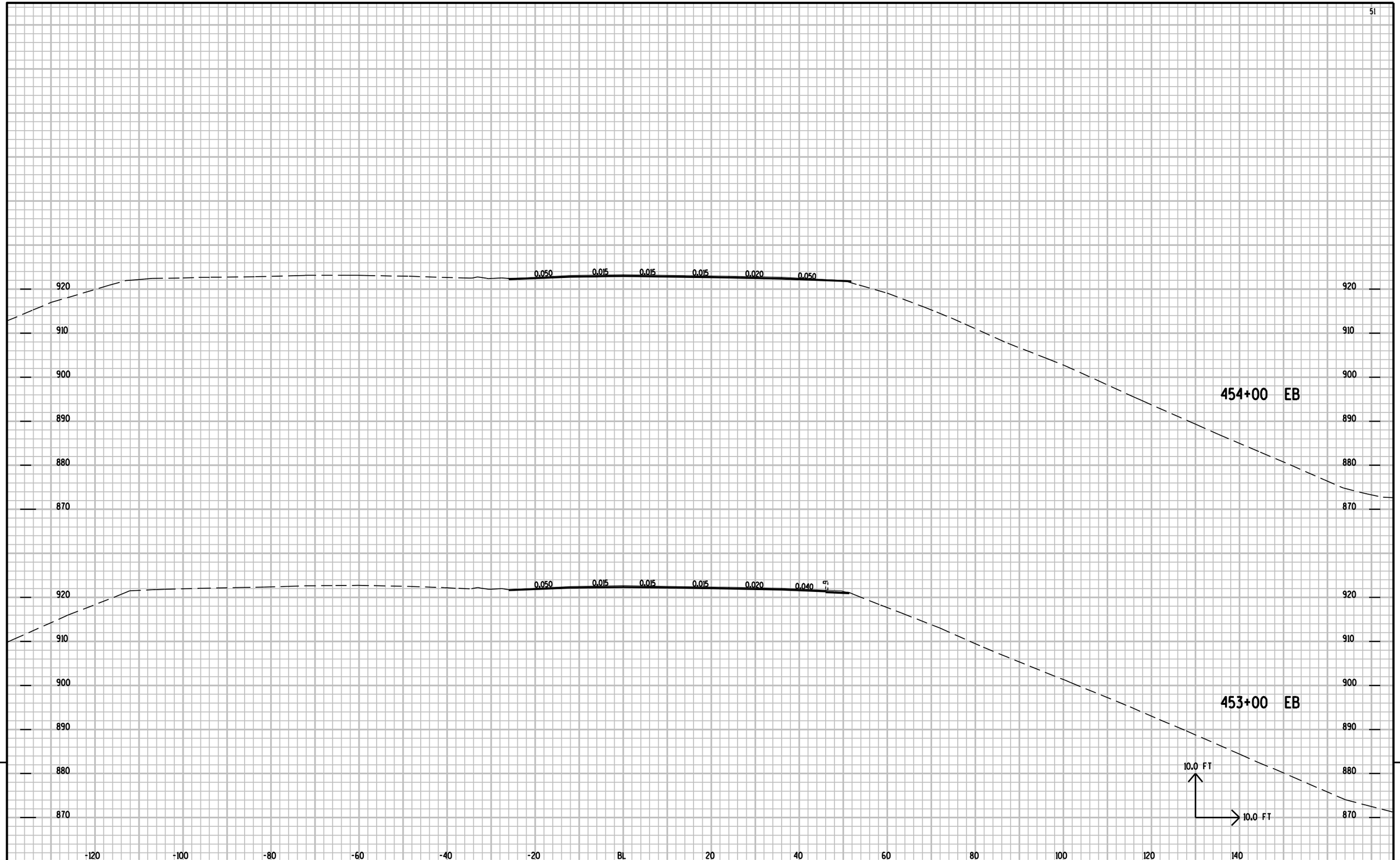

9

9

PROJECT NO: 1010-00-72	HWY: IH 39	COUNTY: DANE	CROSS SECTIONS: EB LANES	SHEET NO:	E

FILE NAME : r:\Support\CADDS\Projects\d1_10100072\090201_XS.DGN PLOT DATE : 25-APR-2012 10:14 PLOT BY : DOTJ3J PLOT NAME : PLOT SCALE : 2.000000:1.000000

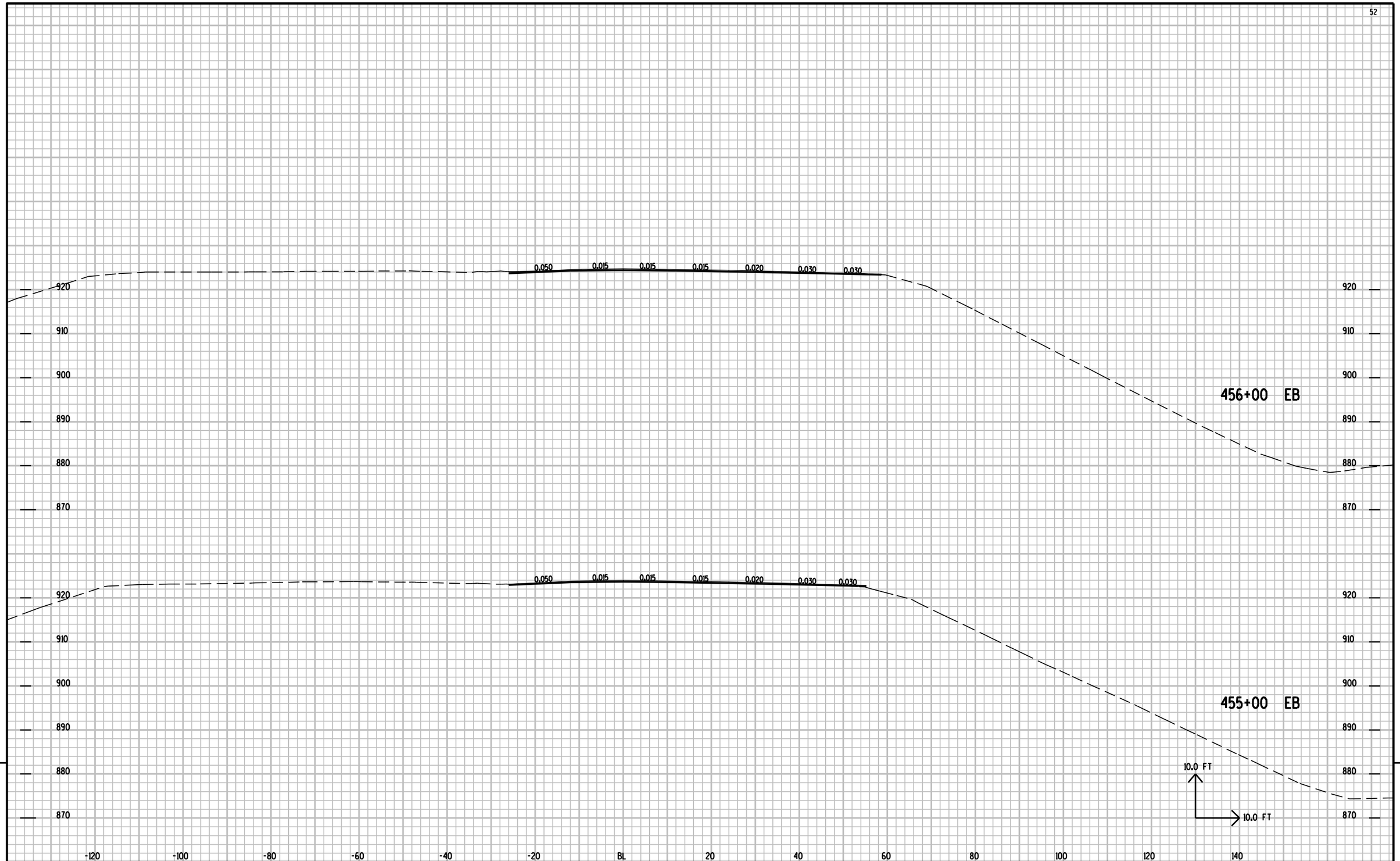

9

9

PROJECT NO: 1010-00-72	HWY: IH 39	COUNTY: DANE	CROSS SECTIONS: EB LANES	SHEET NO:	E

FILE NAME : r:\Support\CADDS\Projects\d1_10100072\090201_XS.DGN PLOT DATE : 25-APR-2012 10:14 PLOT BY : DOTJ3J PLOT NAME : PLOT SCALE : 2.000000:1.000000

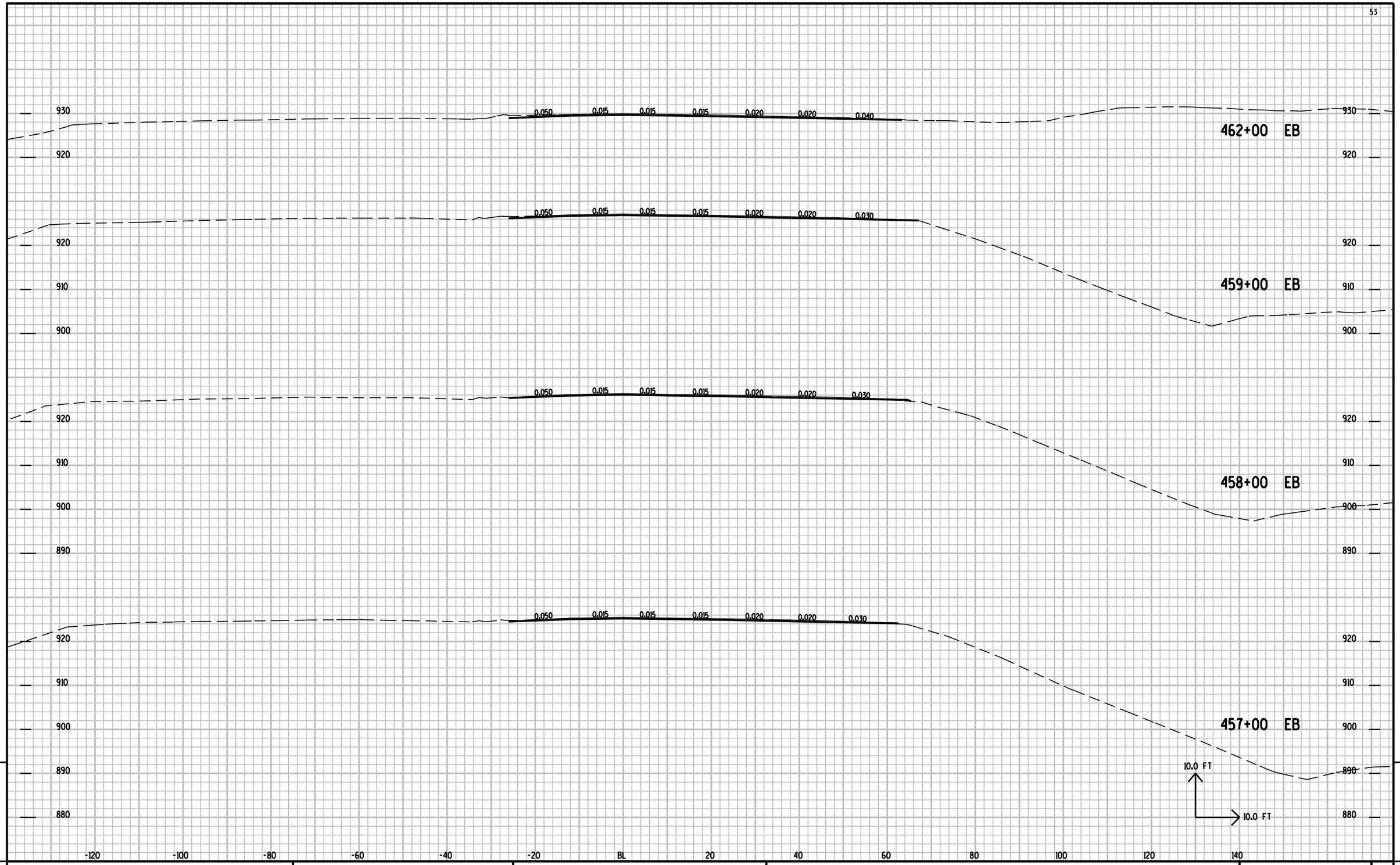

9

9

PROJECT NO: 1010-00-72	HWY: IH 39	COUNTY: DANE	CROSS SECTIONS: EB LANES	SHEET NO:	E

FILE NAME : r:\Support\CADDS\Projects\d1_10100072\090201_XS.DGN PLOT DATE : 25-APR-2012 10:14 PLOT BY : DOTJ3J PLOT NAME : PLOT SCALE : 2.000000:1.000000

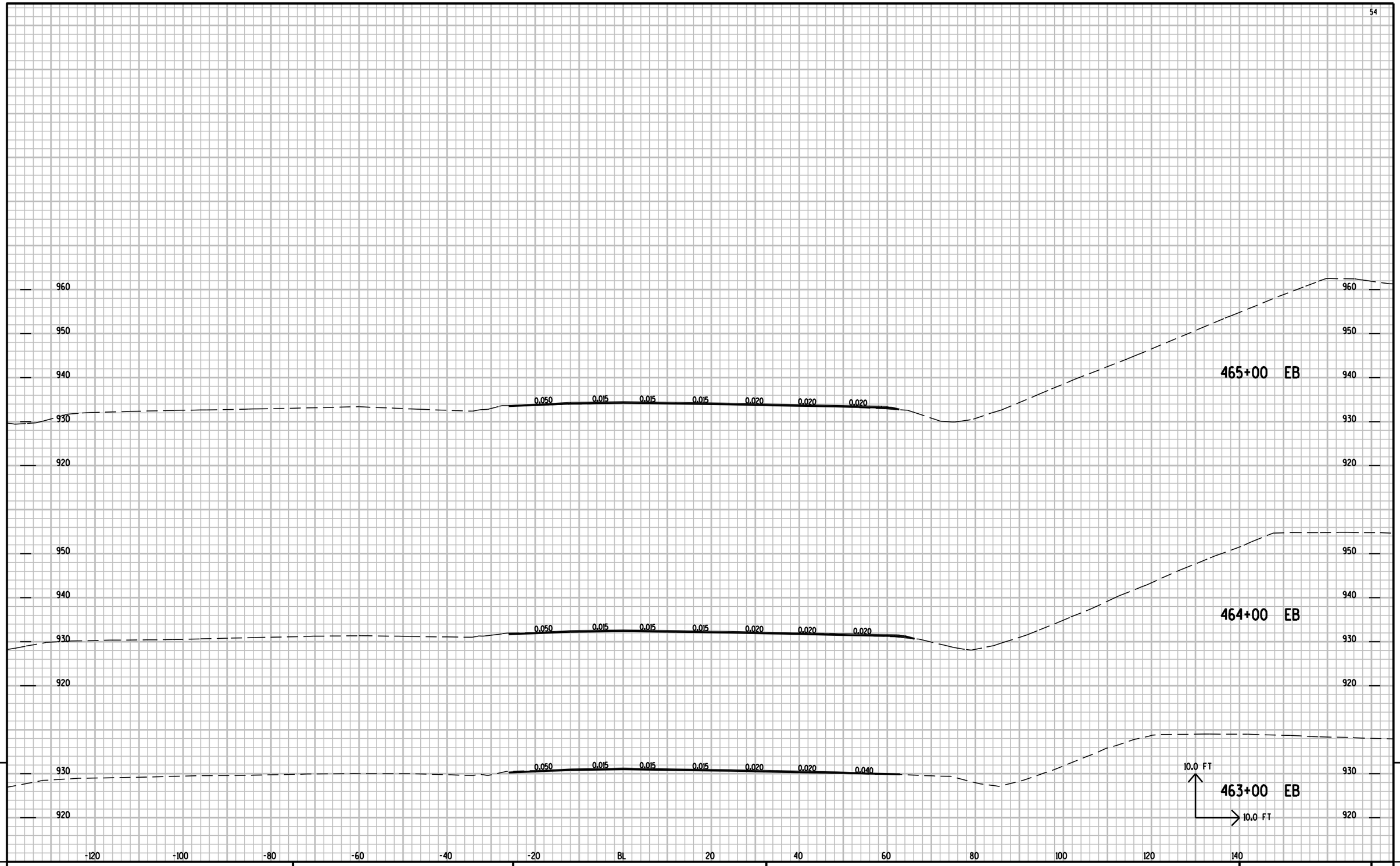

9

9

PROJECT NO: 1010-00-72	HWY: IH 39	COUNTY: DANE	CROSS SECTIONS: EB LANES	SHEET NO:	E

FILE NAME : r:\Support\CADDS\Projects\d1_10100072\090201_XS.DGN PLOT DATE : 25-APR-2012 10:15 PLOT BY : DOTJ3J PLOT NAME : PLOT SCALE : 2.000000:1.000000

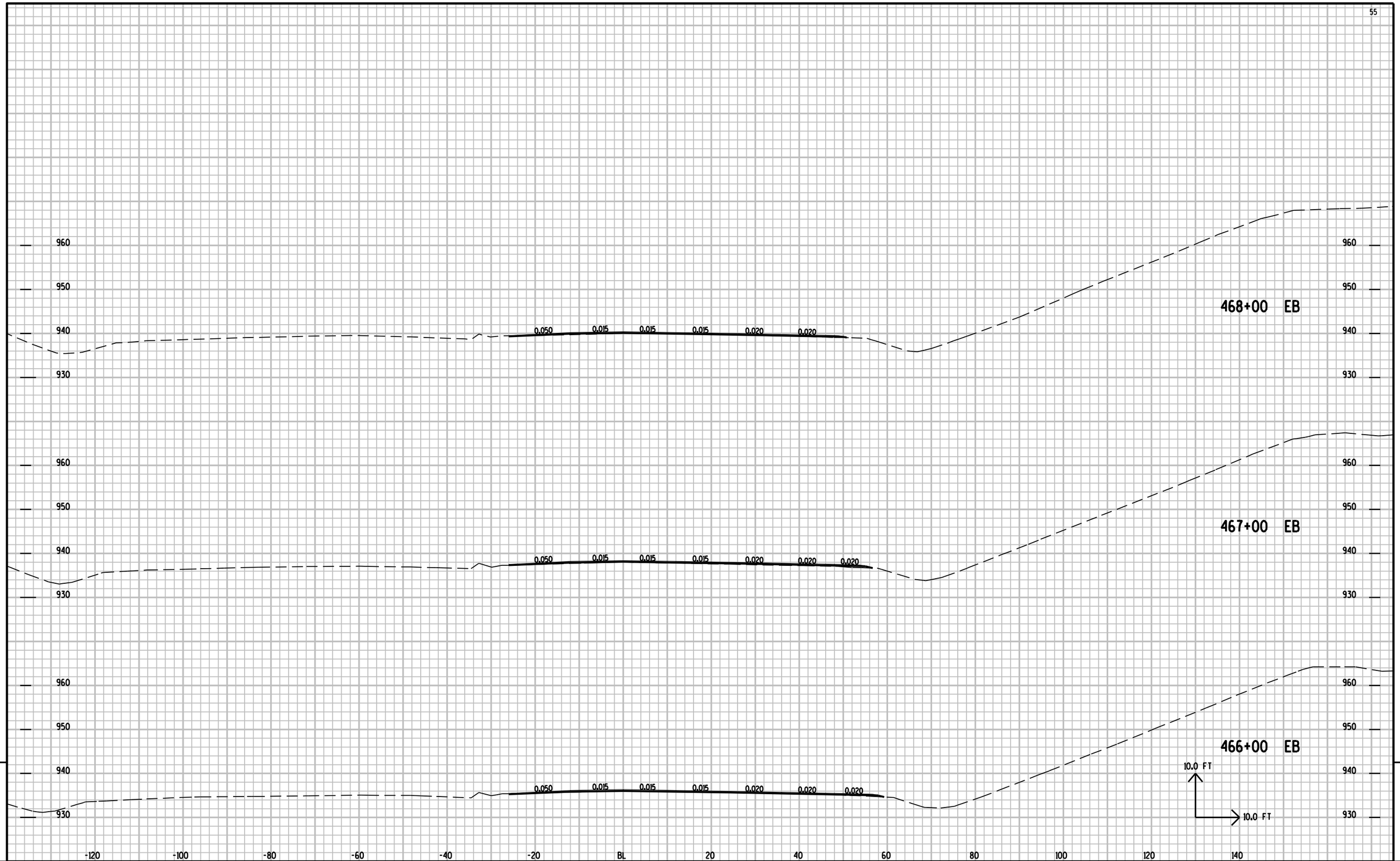

9

9

PROJECT NO: 1010-00-72	HWY: IH 39	COUNTY: DANE	CROSS SECTIONS: EB LANES	SHEET NO:	E

FILE NAME : r:\Support\CADDS\Projects\d1_10100072\090201_XS.DGN PLOT DATE : 25-APR-2012 10:15 PLOT BY : DOTJ3J PLOT NAME : PLOT SCALE : 2.000000:1.000000

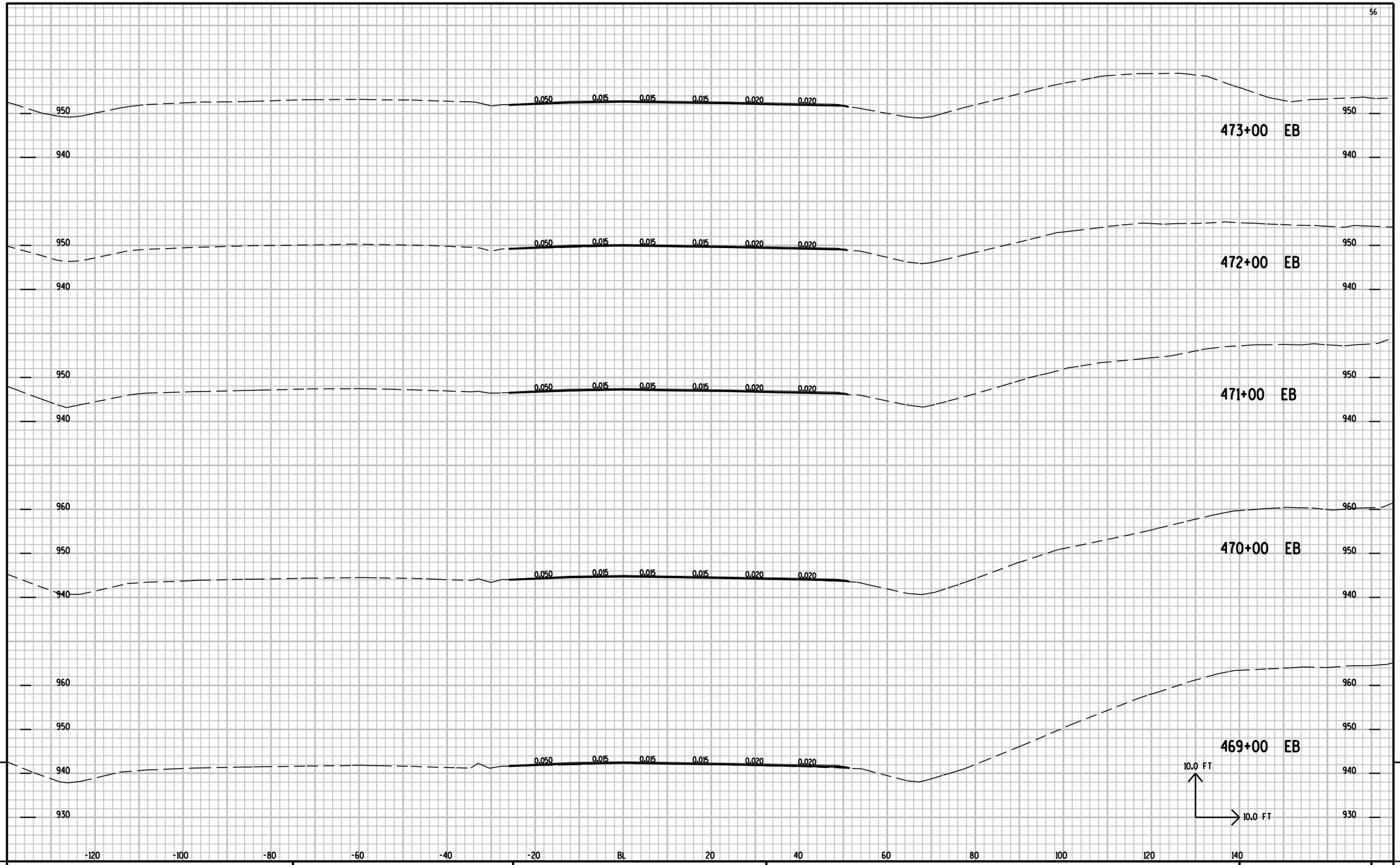

9

9

PROJECT NO: 1010-00-72	HWY: IH 39	COUNTY: DANE	CROSS SECTIONS: EB LANES	SHEET NO:	E

FILE NAME : r:\Support\CADDS\Projects\d1_10100072\090201_XS.DGN PLOT DATE : 25-APR-2012 10:15 PLOT BY : DOTJ3J PLOT NAME : PLOT SCALE : 2.000000:1.000000

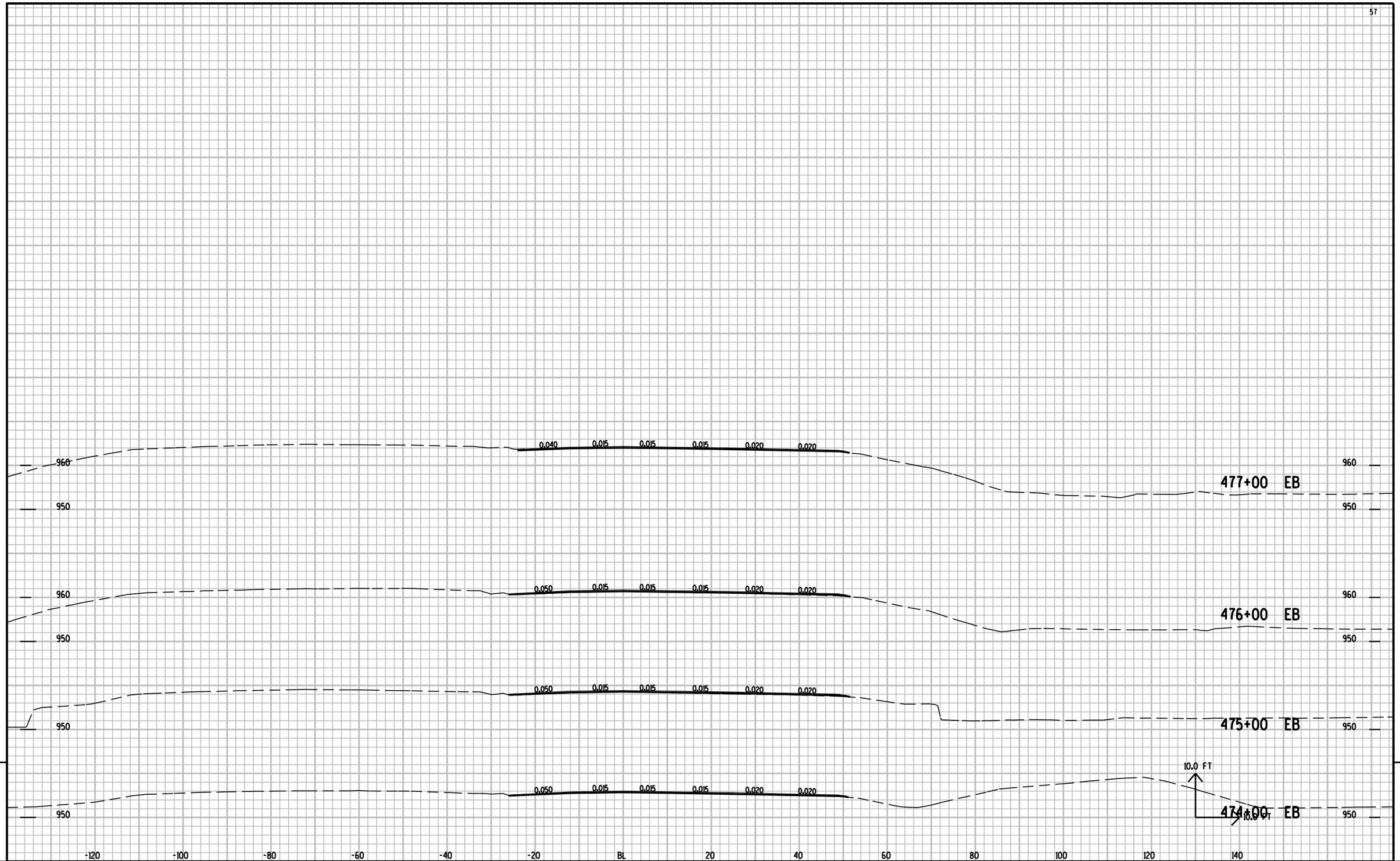

9

9

PROJECT NO: 1010-00-72	HWY: IH 39	COUNTY: DANE	CROSS SECTIONS: EB LANES	SHEET NO:	E

FILE NAME : r:\Support\CADDS\Projects\d1_10100072\090201_XS.DGN PLOT DATE : 25-APR-2012 10:15 PLOT BY : DOTJ3J PLOT NAME : PLOT SCALE : 2.000000:1.000000

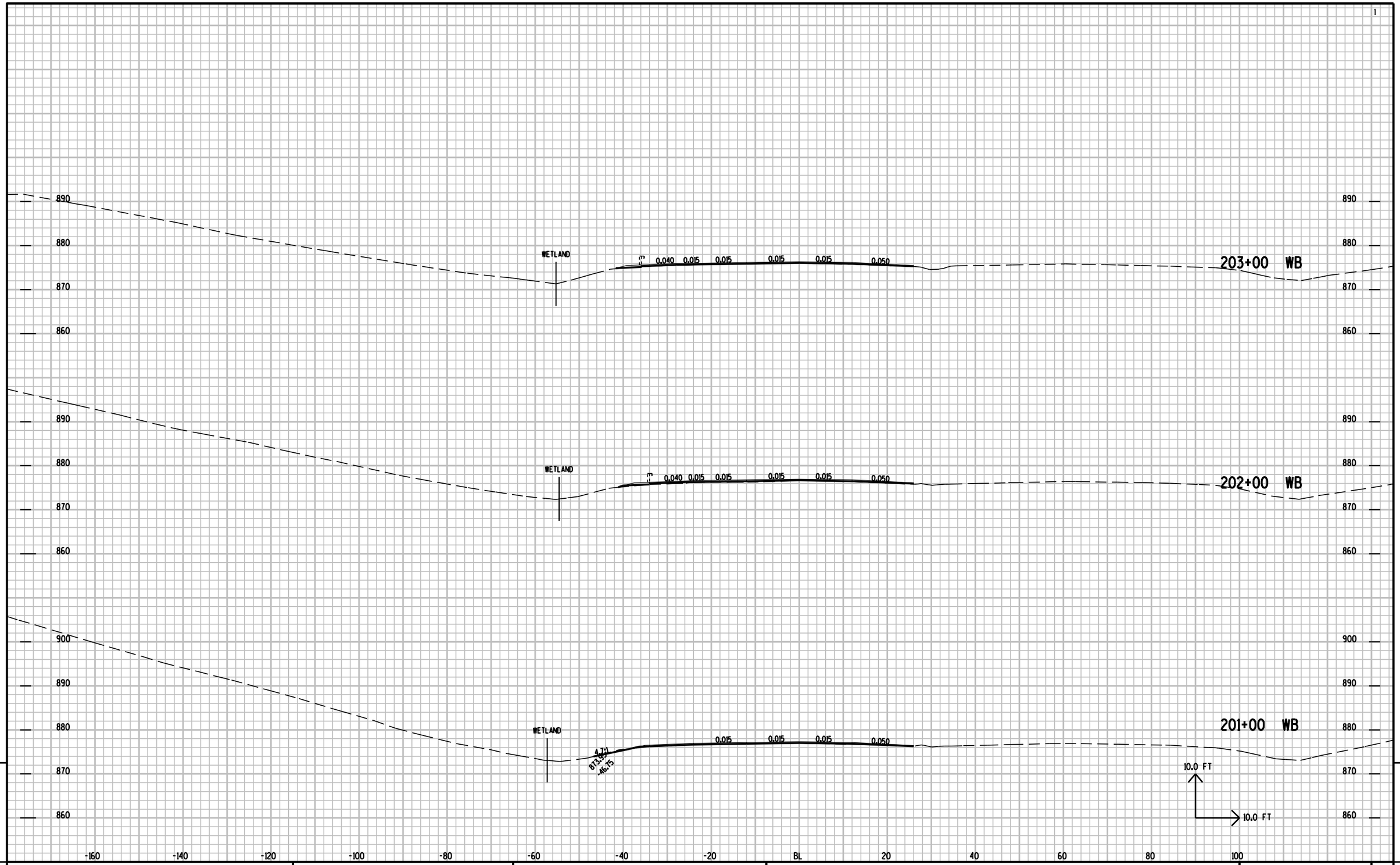

9

9

PROJECT NO: 1010-00-72	HWY: IH 39	COUNTY: DANE	CROSS SECTIONS: WB LANES	SHEET NO:	E

FILE NAME : r:\Support\CADDS\Projects\d1_10100072\090202_XS.DGN PLOT DATE : 25-APR-2012 10:16 PLOT BY : DOTJ3J PLOT NAME : PLOT SCALE : 2.000000:1.000000

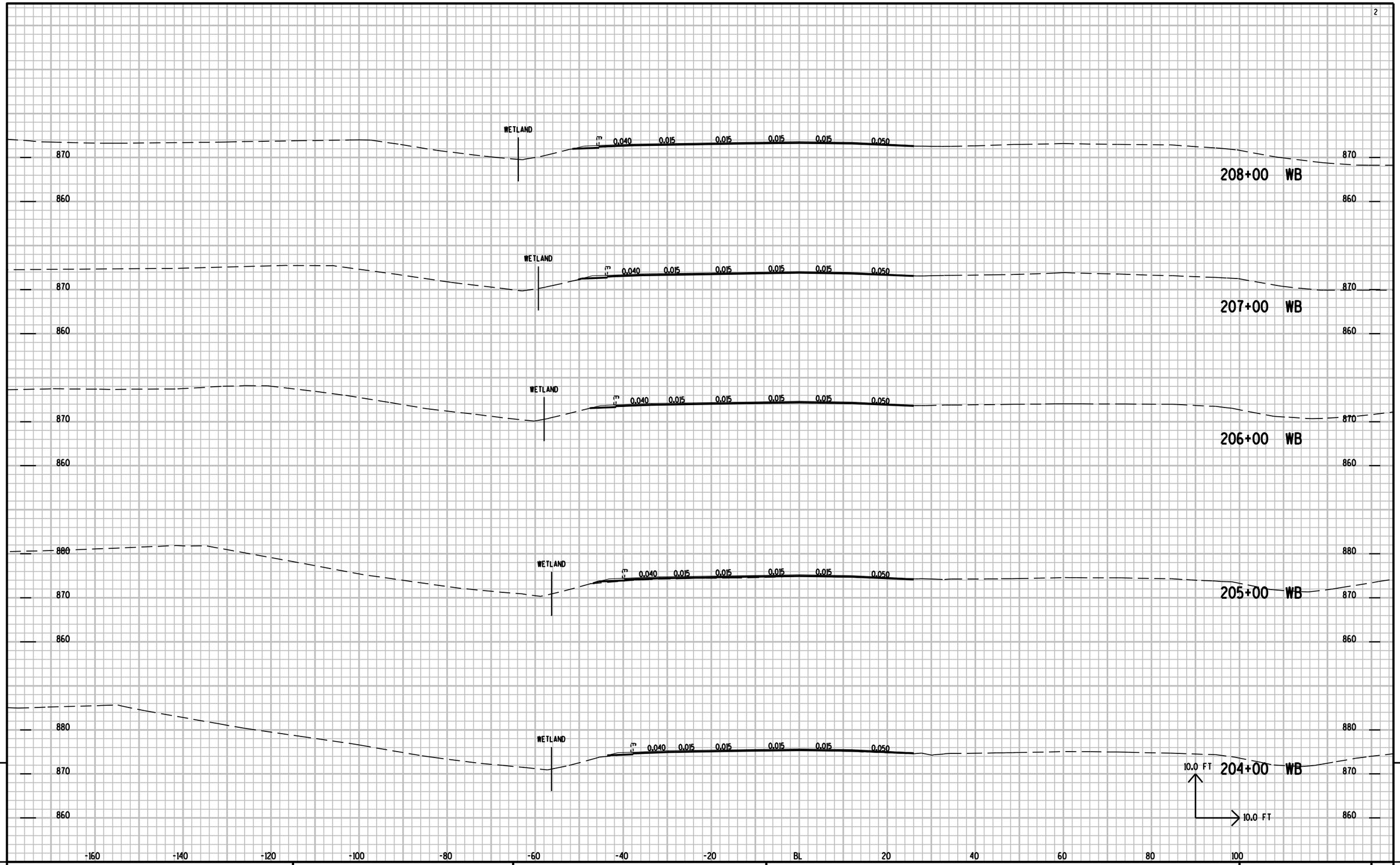

9

9

PROJECT NO: 1010-00-72	HWY: IH 39	COUNTY: DANE	CROSS SECTIONS: WB LANES	SHEET NO:	E

FILE NAME : r:\Support\CADDS\Projects\d1_10100072\090202_XS.DGN PLOT DATE : 25-APR-2012 10:16 PLOT BY : DOTJ3J PLOT NAME : PLOT SCALE : 2.000000:1.000000

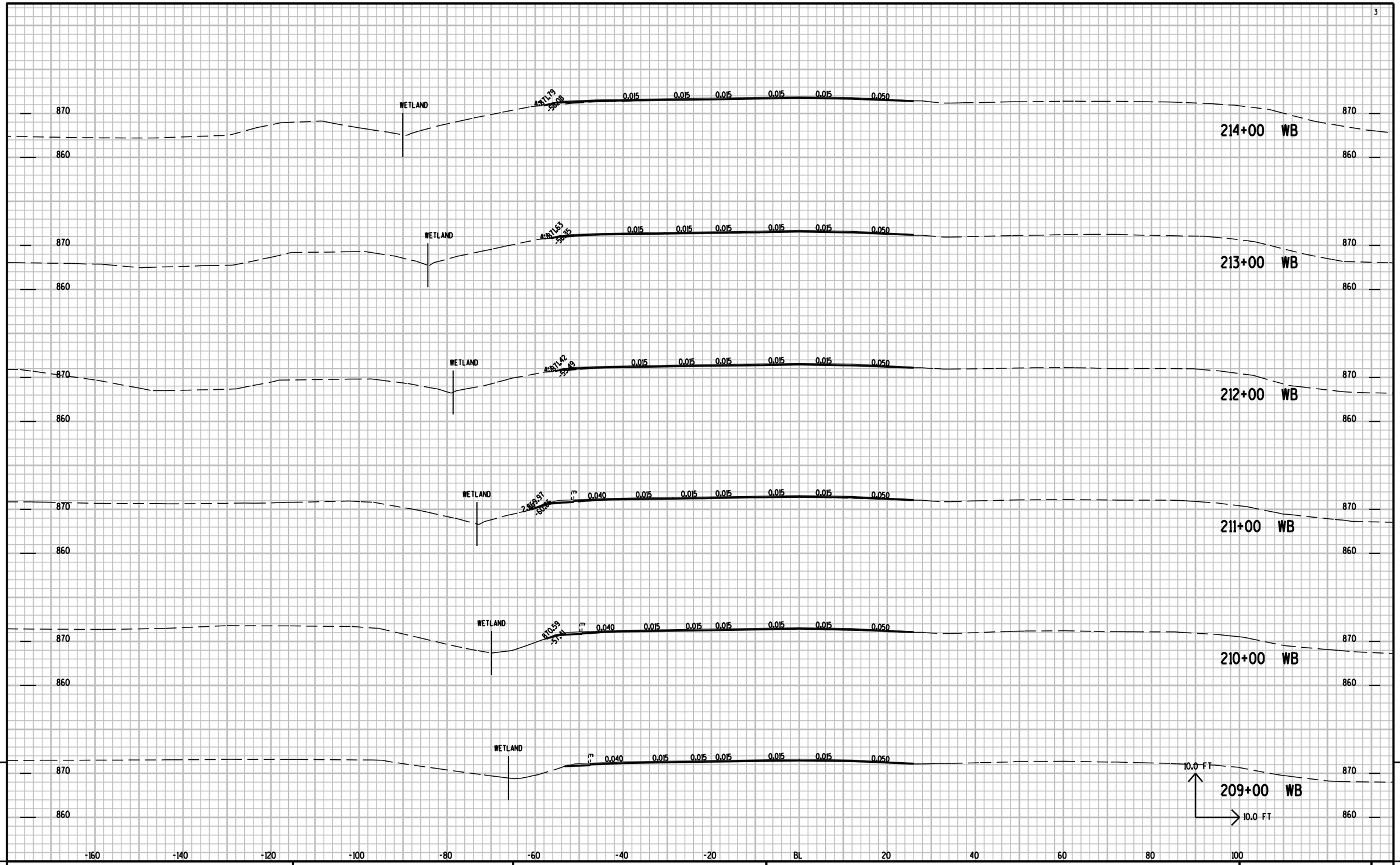

9

PROJECT NO: 1010-00-72	HWY: IH 39	COUNTY: DANE	CROSS SECTIONS: WB LANES	SHEET NO:	E

FILE NAME : r:\Support\CADDS\Projects\d1_10100072\090202_XS.DGN PLOT DATE : 25-APR-2012 10:16 PLOT BY : DOTJ3J PLOT NAME : PLOT SCALE : 2.000000:1.000000

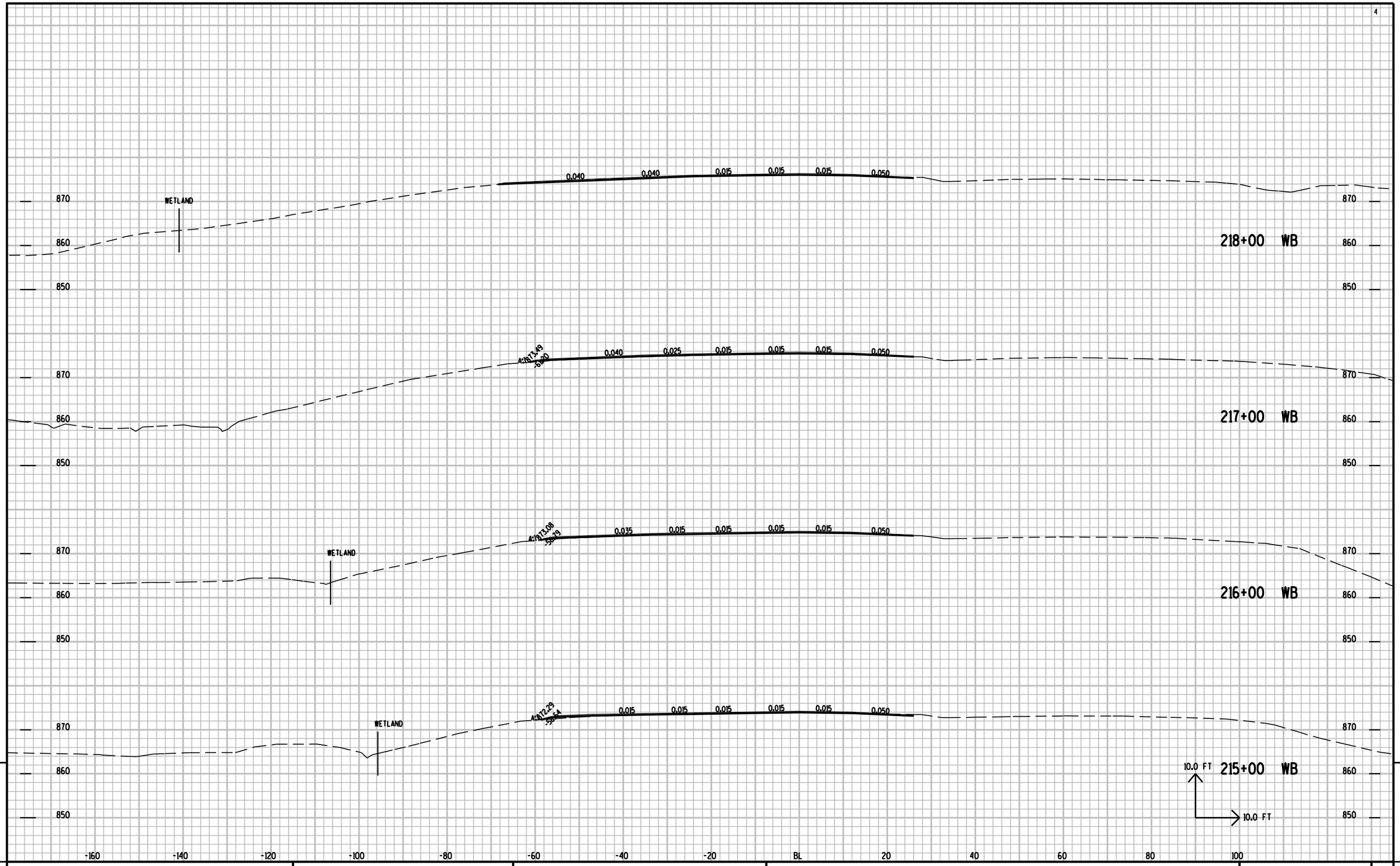

9

9

PROJECT NO: 1010-00-72	HWY: IH 39	COUNTY: DANE	CROSS SECTIONS: WB LANES	SHEET NO:	E

FILE NAME : r:\Support\CADDS\Projects\d1_10100072\090202_XS.DGN PLOT DATE : 25-APR-2012 10:16 PLOT BY : DOTJ3J PLOT NAME : PLOT SCALE : 2.000000:1.000000

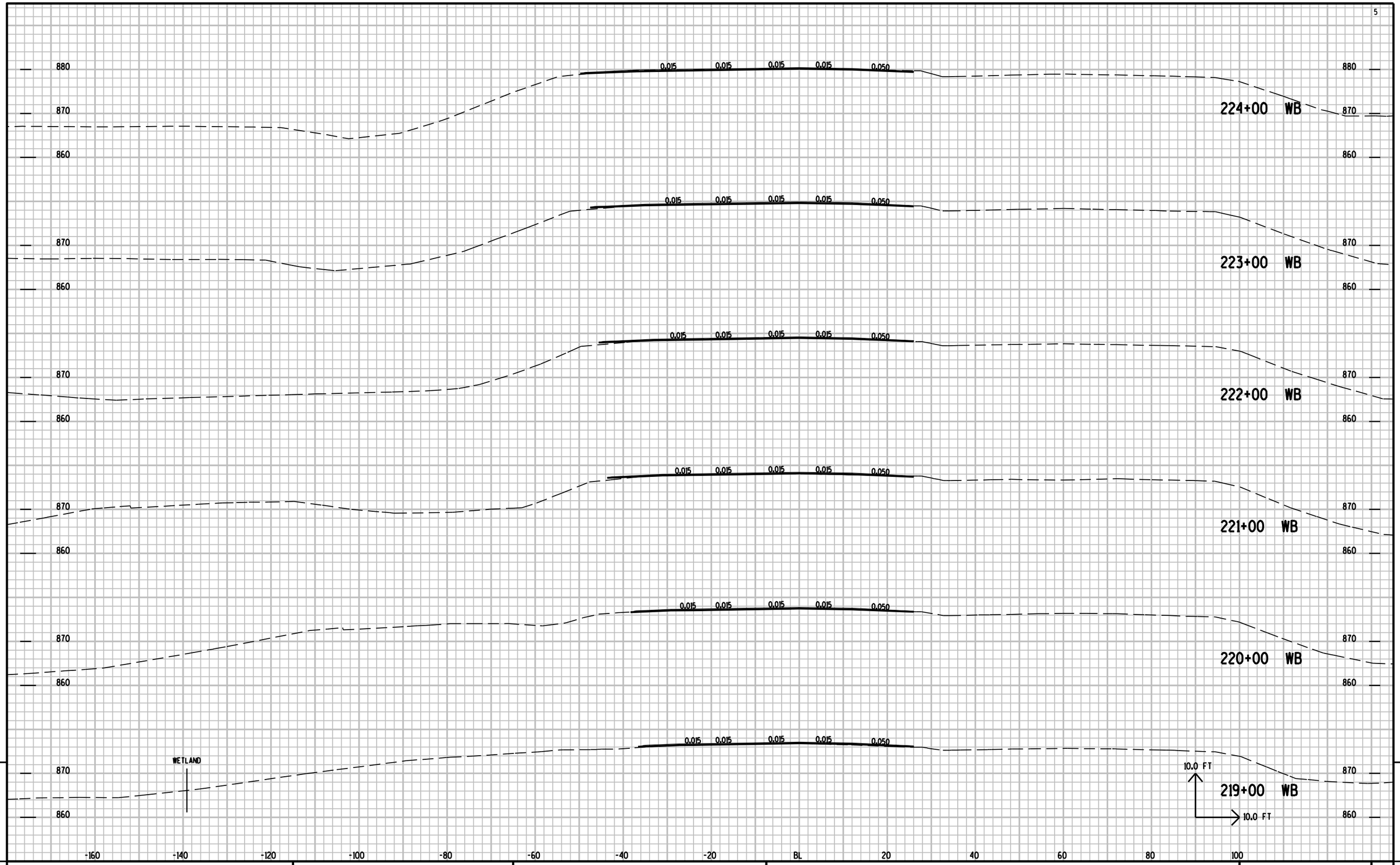

PROJECT NO: 1010-00-72	HWY: IH 39	COUNTY: DANE	CROSS SECTIONS: WB LANES	SHEET NO:	E

FILE NAME : r:\Support\CADDS\Projects\d1_10100072\090202_XS.DGN PLOT DATE : 25-APR-2012 10:16 PLOT BY : DOTJ3J PLOT NAME : PLOT SCALE : 2.000000:1.000000

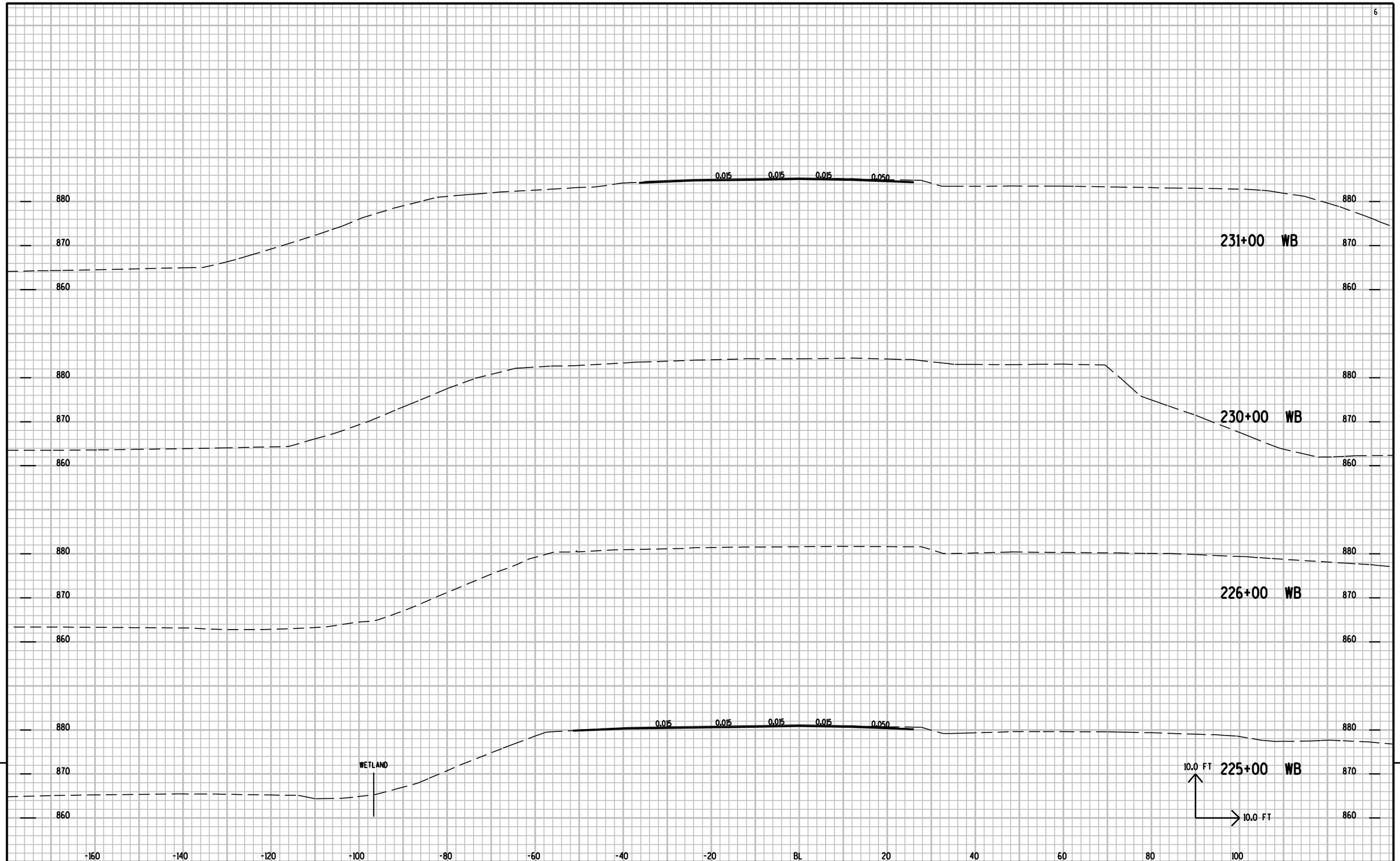

9

9

PROJECT NO: 1010-00-72	HWY: IH 39	COUNTY: DANE	CROSS SECTIONS: WB LANES	SHEET NO:	E

FILE NAME : r:\Support\CADDS\Projects\d1_10100072\090202_XS.DGN PLOT DATE : 25-APR-2012 10:16 PLOT BY : DOTJ3J PLOT NAME : PLOT SCALE : 2.000000:1.000000

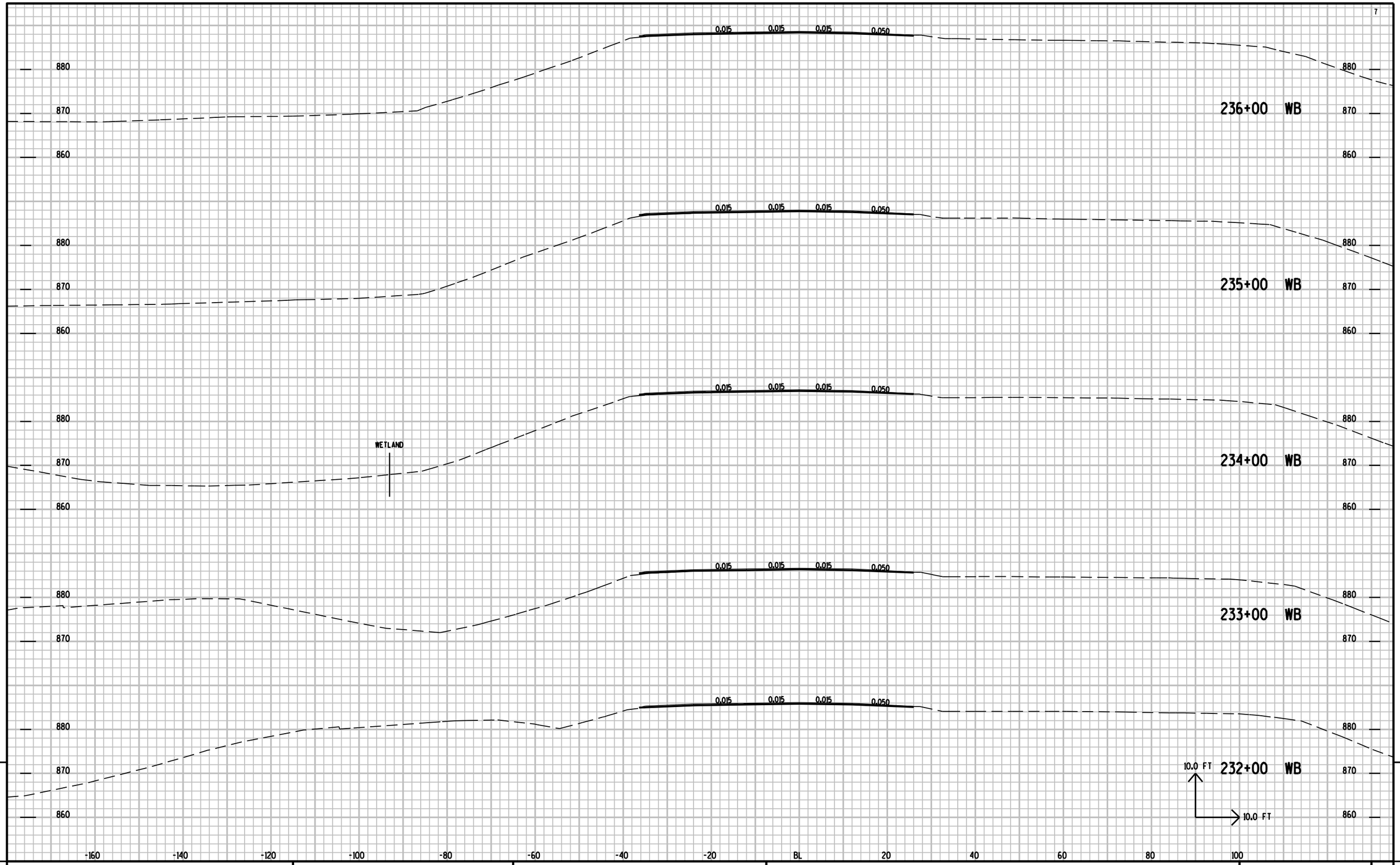

PROJECT NO: 1010-00-72	HWY: IH 39	COUNTY: DANE	CROSS SECTIONS: WB LANES	SHEET NO:	E

FILE NAME : r:\Support\CADDS\Projects\d1_10100072\090202_XS.DGN PLOT DATE : 25-APR-2012 10:17 PLOT BY : DOTJ3J PLOT NAME : PLOT SCALE : 2.000000:1.000000

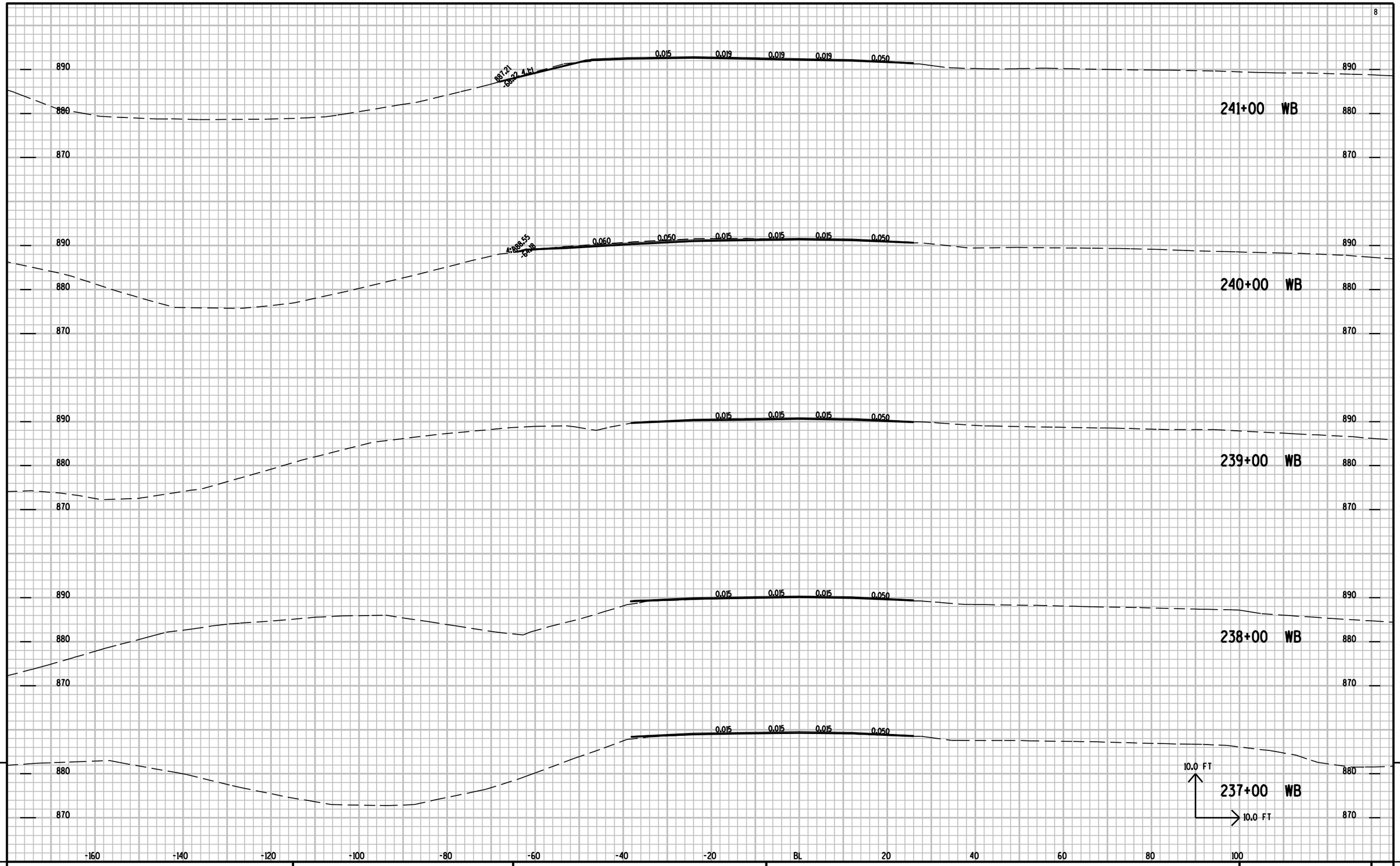

PROJECT NO: 1010-00-72	HWY: IH 39	COUNTY: DANE	CROSS SECTIONS: WB LANES	SHEET NO:	E

FILE NAME : r:\Support\CADDS\Projects\d1_10100072\090202_XS.DGN PLOT DATE : 25-APR-2012 10:17 PLOT BY : DOTJ3J PLOT NAME : PLOT SCALE : 2.000000:1.000000

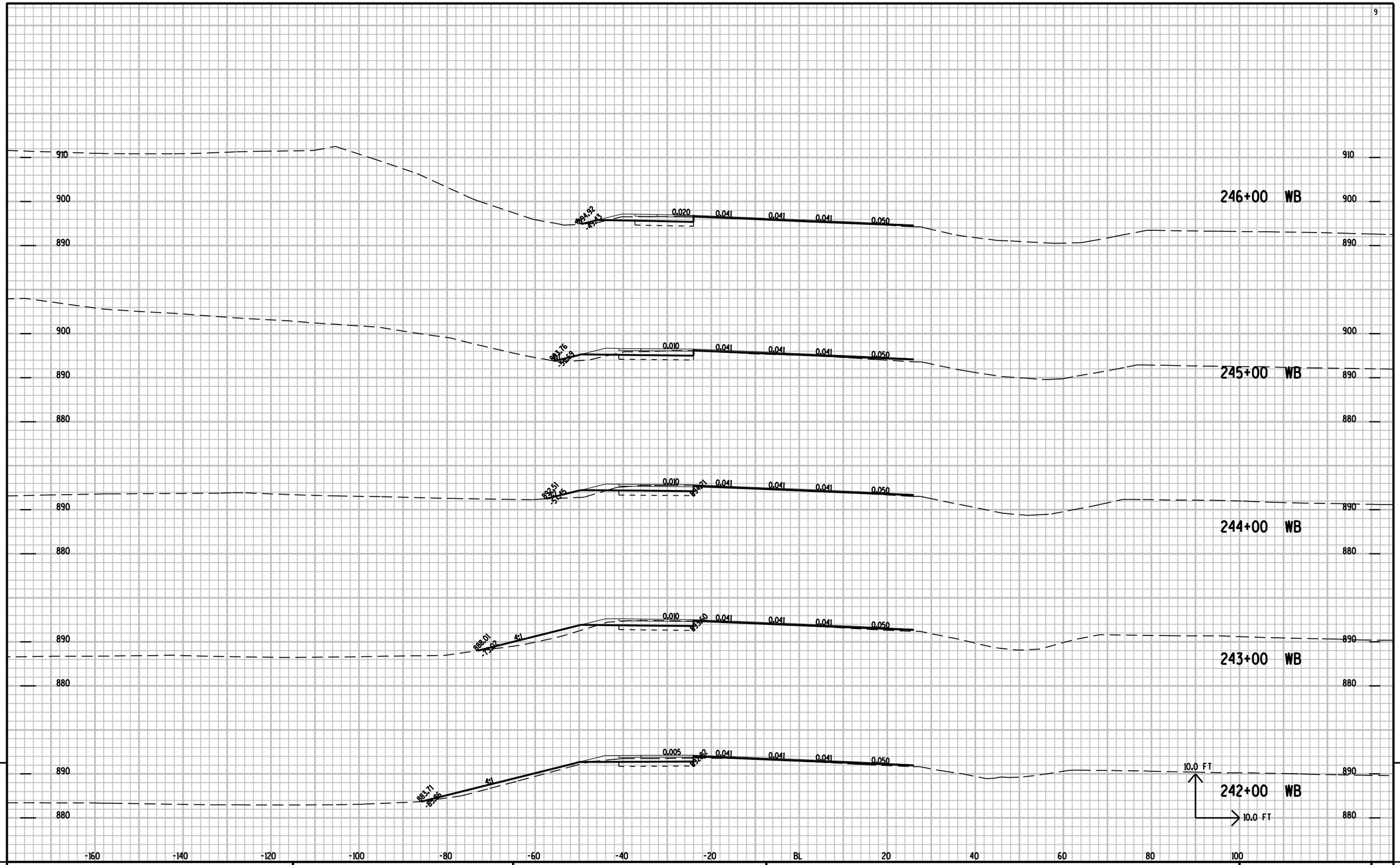

PROJECT NO: 1010-00-72	HWY: IH 39	COUNTY: DANE	CROSS SECTIONS: WB LANES	SHEET NO:	E

FILE NAME : r:\Support\CADDS\Projects\d1_10100072\090202_XS.DGN PLOT DATE : 25-APR-2012 10:17 PLOT BY : DOTJ3J PLOT NAME : PLOT SCALE : 2.000000:1.000000

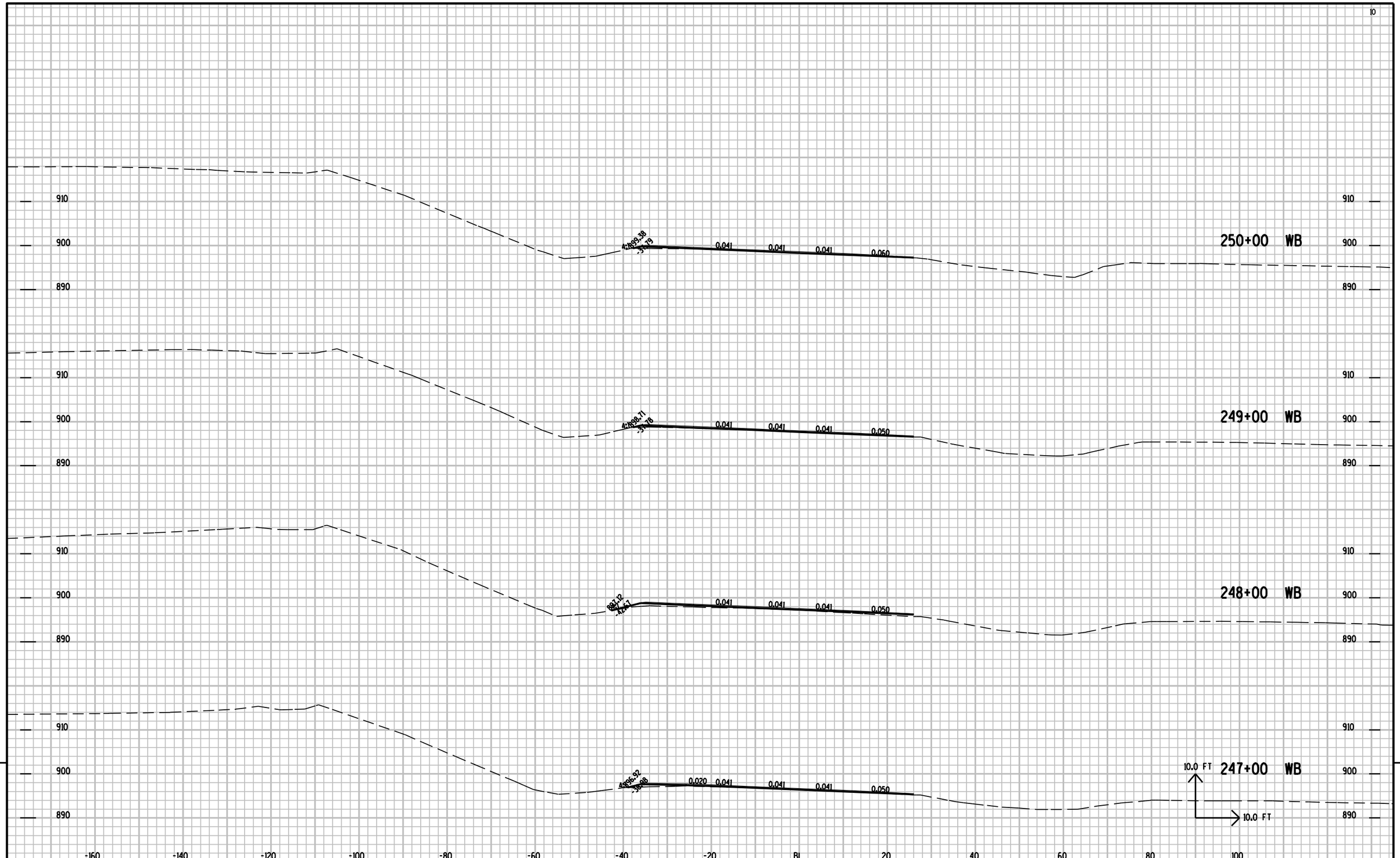

9

9

PROJECT NO: 1010-00-72	HWY: IH 39	COUNTY: DANE	CROSS SECTIONS: WB LANES	SHEET NO:	E

FILE NAME : r:\Support\CADDS\Projects\d1_10100072\090202_XS.DGN PLOT DATE : 25-APR-2012 10:17 PLOT BY : DOTJ3J PLOT NAME : PLOT SCALE : 2.000000:1.000000

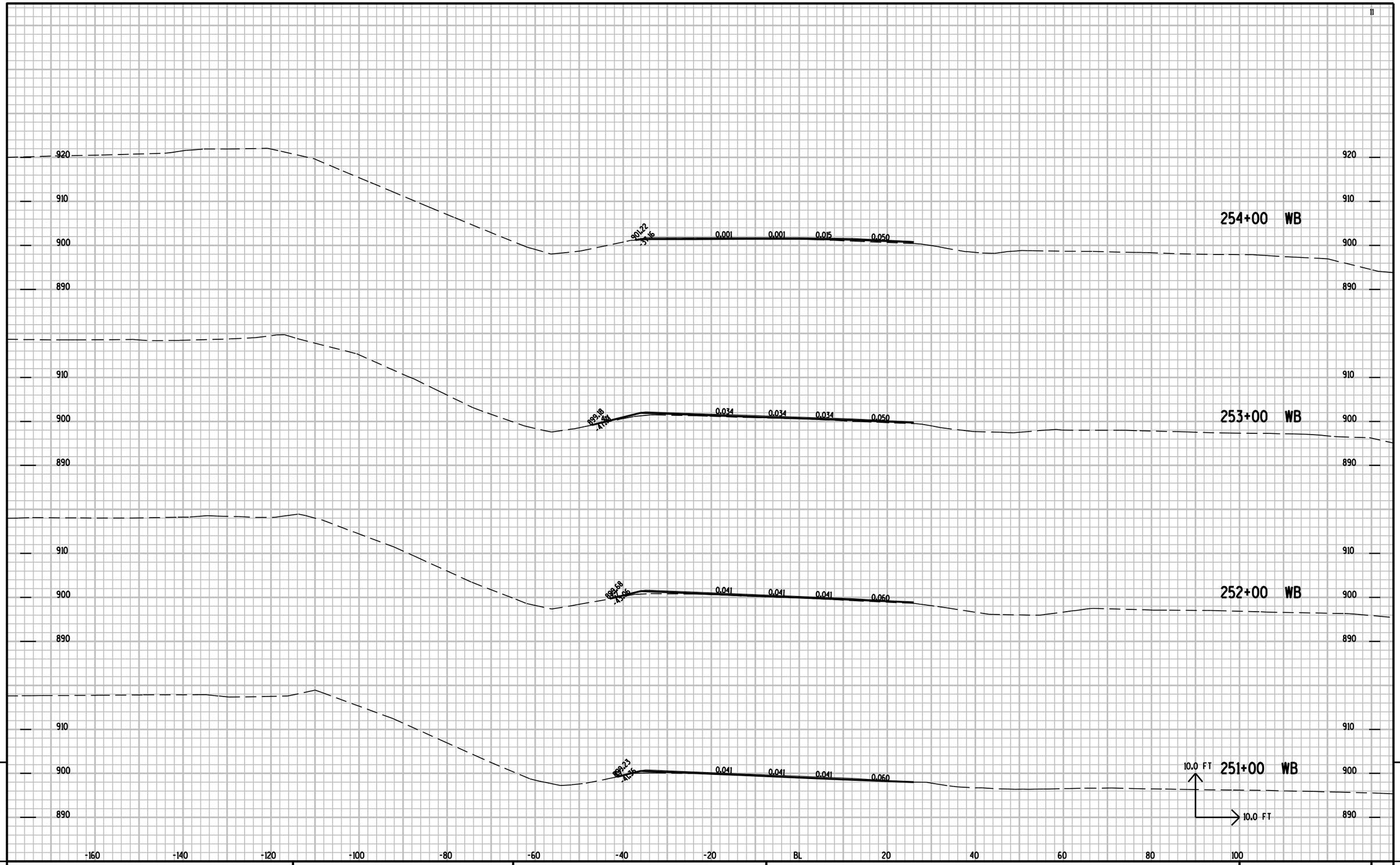

9

9

PROJECT NO: 1010-00-72	HWY: IH 39	COUNTY: DANE	CROSS SECTIONS: WB LANES	SHEET NO:	E

FILE NAME : r:\Support\CADDS\Projects\d1_10100072\090202_XS.DGN PLOT DATE : 25-APR-2012 10:17 PLOT BY : DOTJ3J PLOT NAME : PLOT SCALE : 2.000000:1.000000

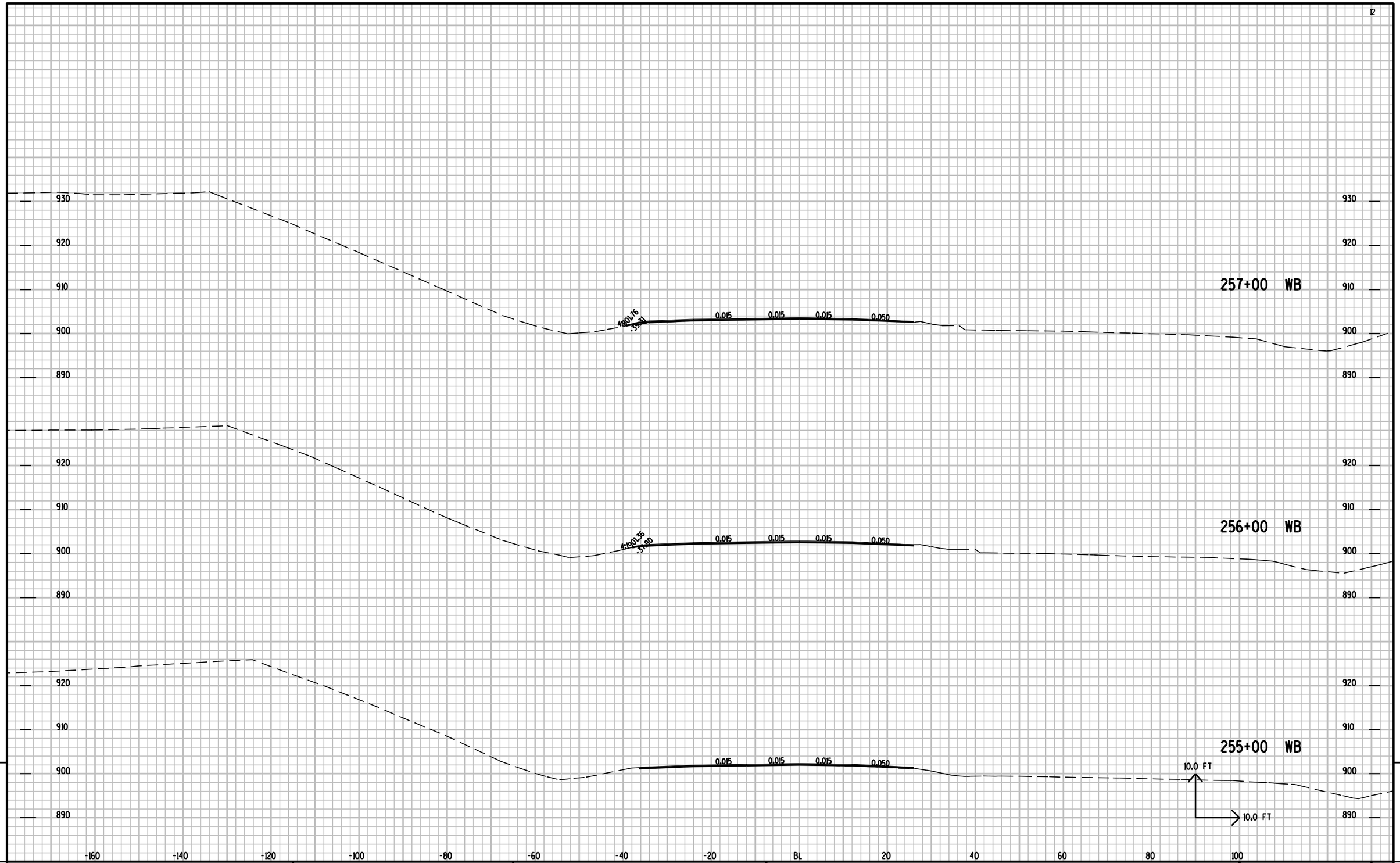

9

9

PROJECT NO: 1010-00-72	HWY: IH 39	COUNTY: DANE	CROSS SECTIONS: WB LANES	SHEET NO:	E

FILE NAME : r:\Support\CADDS\Projects\d1_10100072\090202_XS.DGN PLOT DATE : 25-APR-2012 10:17 PLOT BY : DOTJ3J PLOT NAME : PLOT SCALE : 2.000000:1.000000

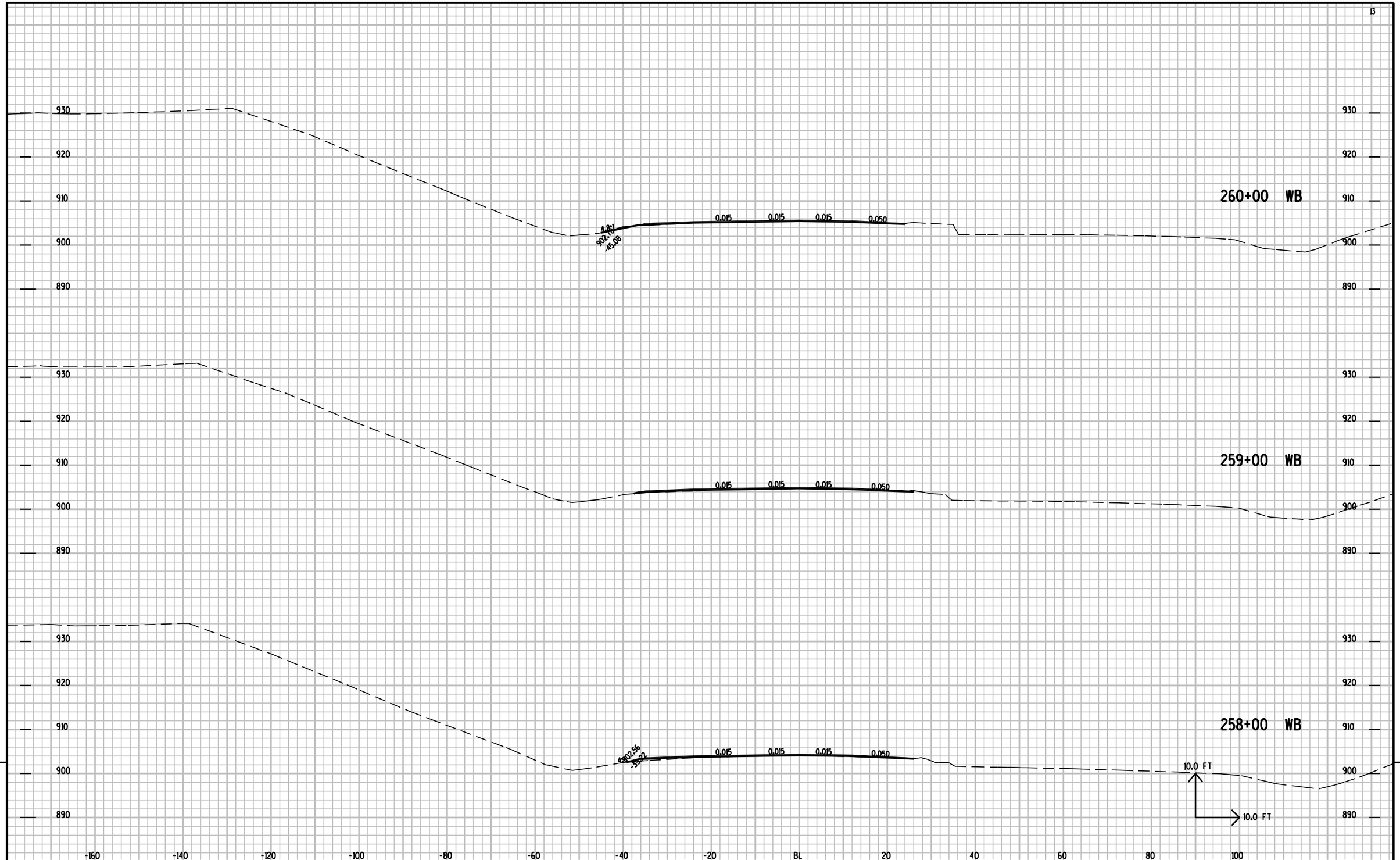

9

9

PROJECT NO: 1010-00-72	HWY: IH 39	COUNTY: DANE	CROSS SECTIONS: WB LANES	SHEET NO:	E

FILE NAME : r:\Support\CADDS\Projects\d1_10100072\090202_XS.DGN PLOT DATE : 25-APR-2012 10:18 PLOT BY : DOTJ3J PLOT NAME : PLOT SCALE : 2.000000:1.000000

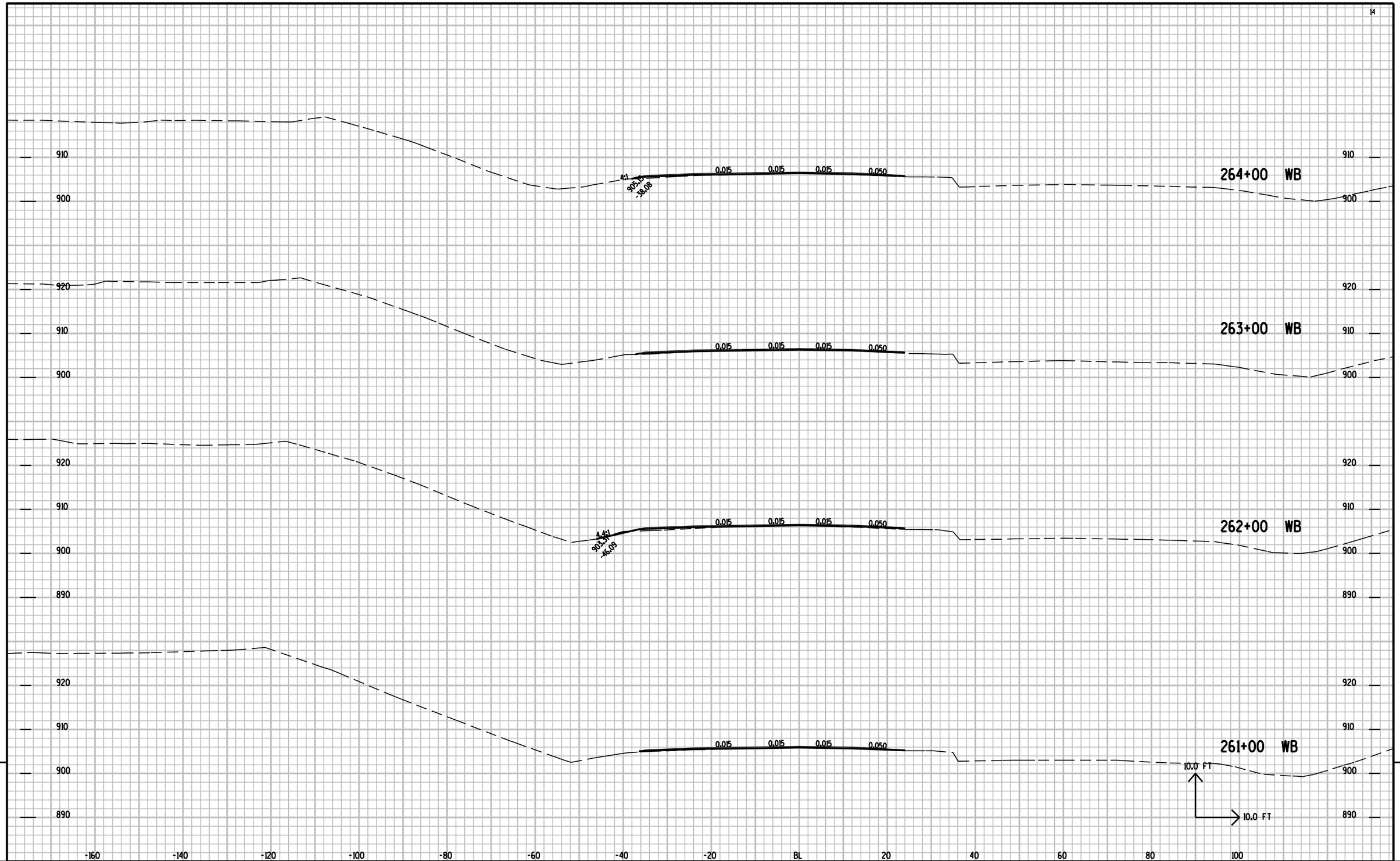

PROJECT NO: 1010-00-72	HWY: IH 39	COUNTY: DANE	CROSS SECTIONS: WB LANES	SHEET NO:	E

FILE NAME : r:\Support\CADDS\Projects\d1_10100072\090202_XS.DGN PLOT DATE : 25-APR-2012 10:18 PLOT BY : DOTJ3J PLOT NAME : PLOT SCALE : 2.000000:1.000000

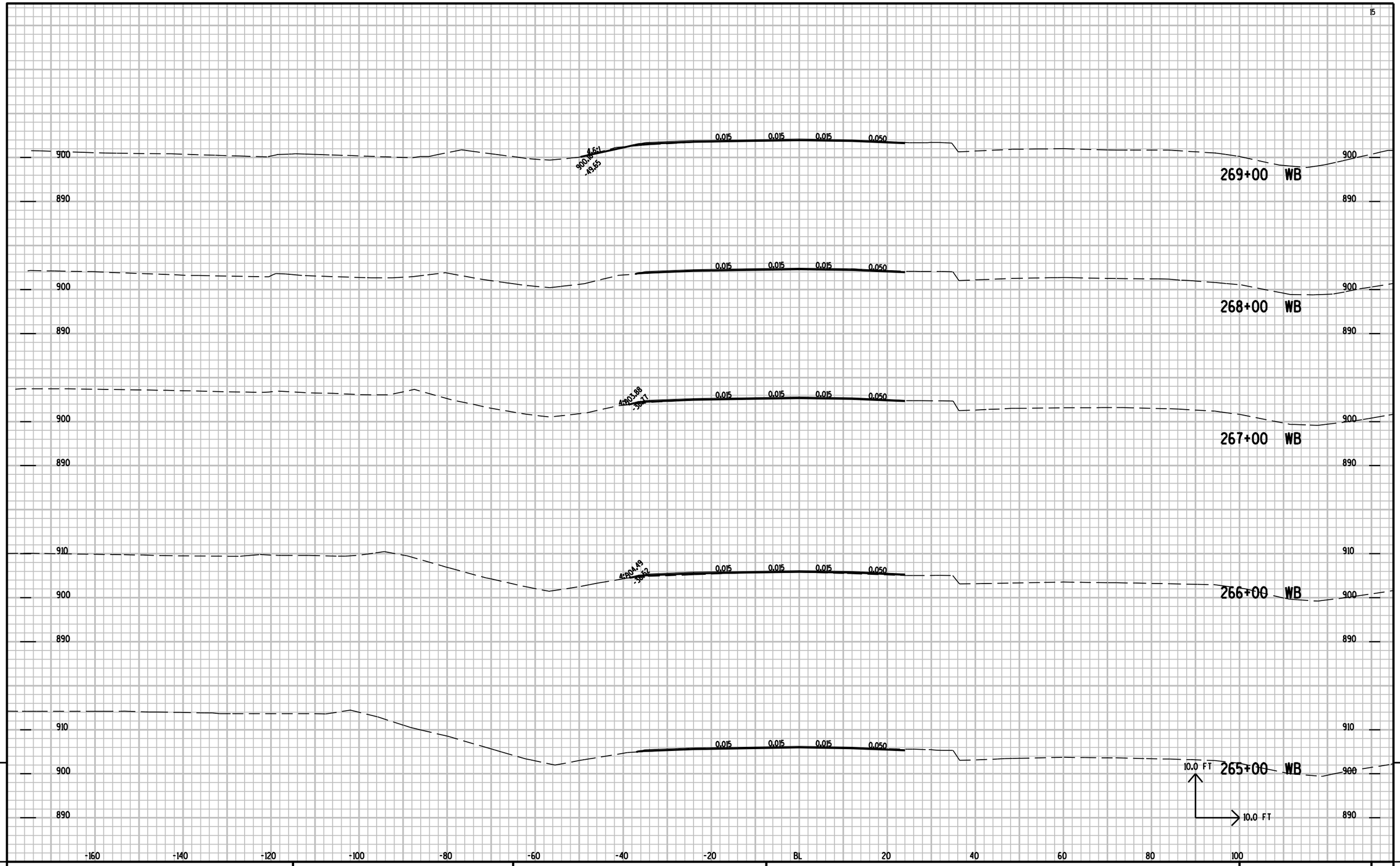

9

9

PROJECT NO: 1010-00-72	HWY: IH 39	COUNTY: DANE	CROSS SECTIONS: WB LANES	SHEET NO:	E

FILE NAME : r:\Support\CADDS\Projects\d1_10100072\090202_XS.DGN PLOT DATE : 25-APR-2012 10:18 PLOT BY : DOTJ3J PLOT NAME : PLOT SCALE : 2.000000:1.000000

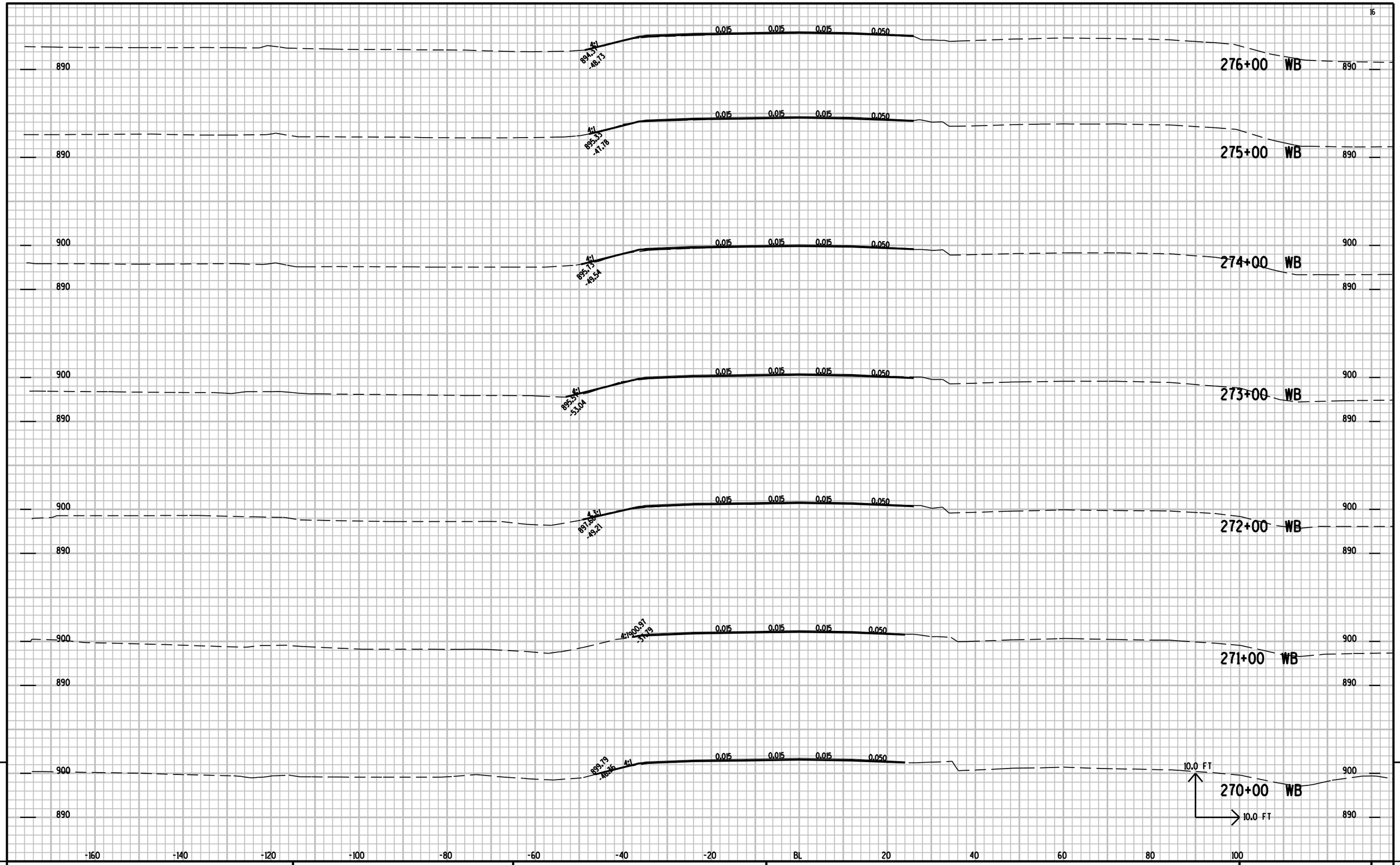

PROJECT NO: 1010-00-72	HWY: IH 39	COUNTY: DANE	CROSS SECTIONS: WB LANES	SHEET NO:	E

FILE NAME : r:\Support\CADDS\Projects\d1_10100072\090202_XS.DGN PLOT DATE : 25-APR-2012 10:18 PLOT BY : DOTJ3J PLOT NAME : PLOT SCALE : 2.000000:1.000000

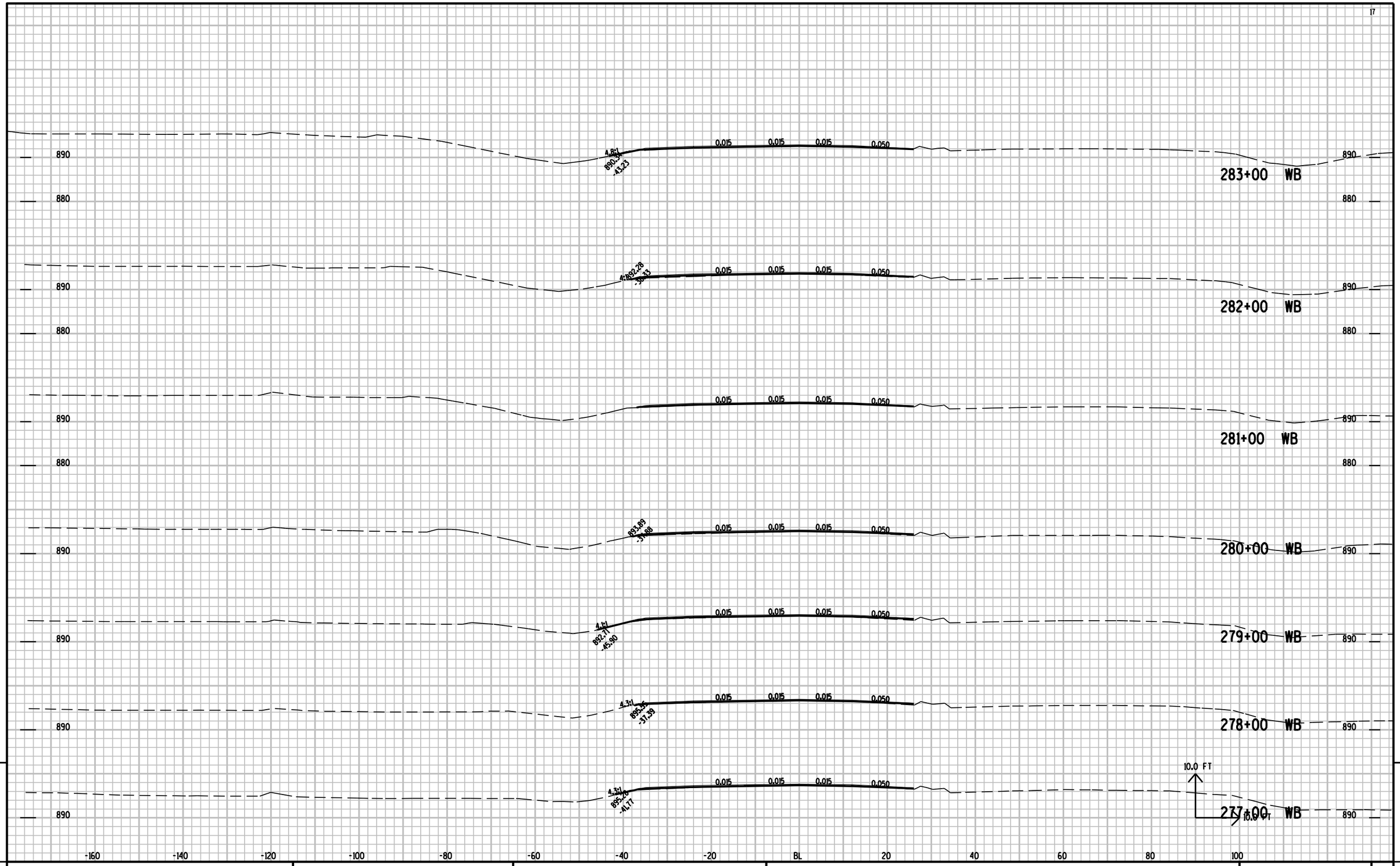

PROJECT NO: 1010-00-72	HWY: IH 39	COUNTY: DANE	CROSS SECTIONS: WB LANES	SHEET NO:	E

FILE NAME : r:\Support\CADDS\Projects\d1_10100072\090202_XS.DGN PLOT DATE : 25-APR-2012 10:18 PLOT BY : DOTJ3J PLOT NAME : PLOT SCALE : 2.000000:1.000000

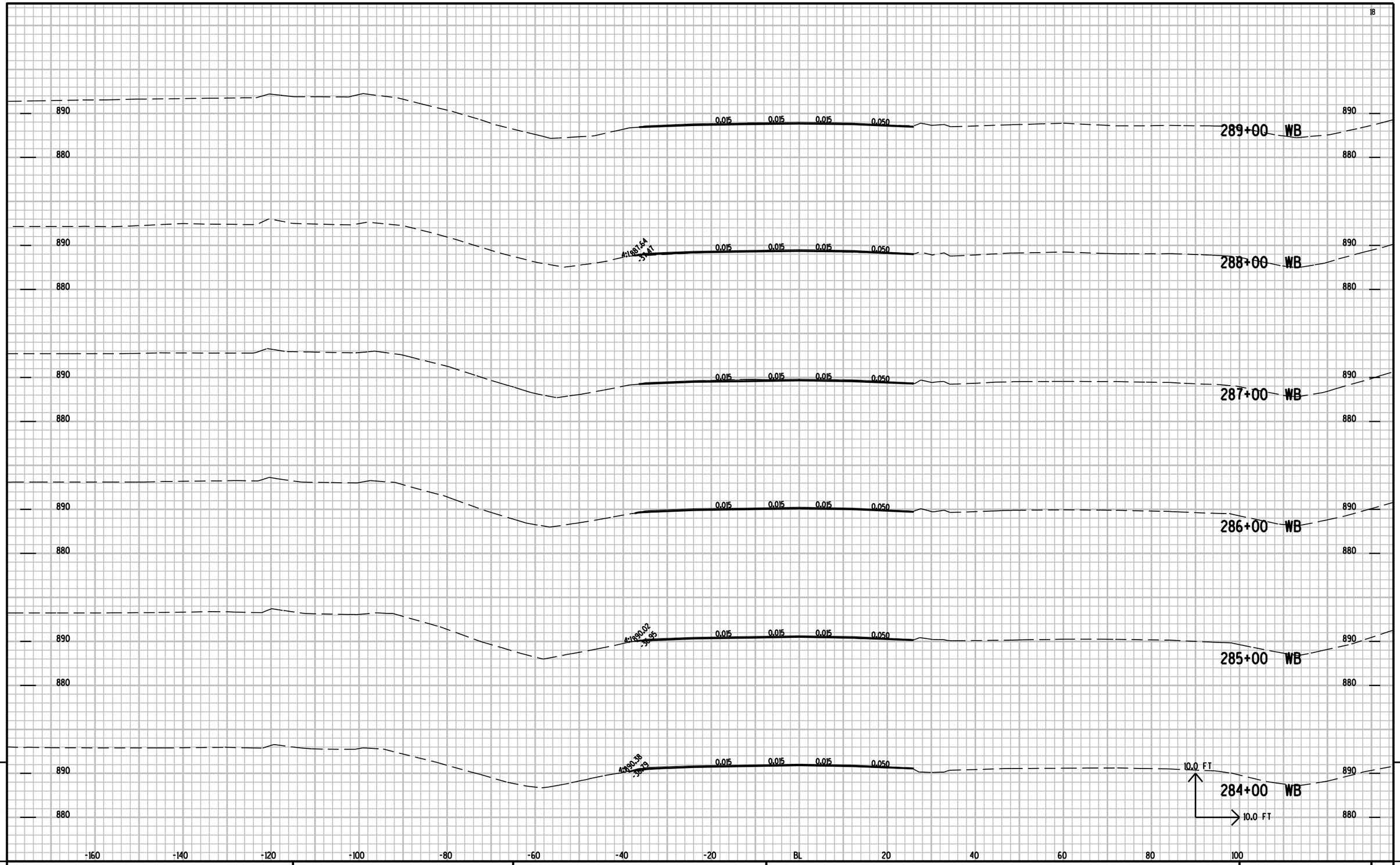

9

9

PROJECT NO: 1010-00-72	HWY: IH 39	COUNTY: DANE	CROSS SECTIONS: WB LANES	SHEET NO:	E

FILE NAME : r:\Support\CADDS\Projects\d1_10100072\090202_XS.DGN PLOT DATE : 25-APR-2012 10:19 PLOT BY : DOTJ3J PLOT NAME : PLOT SCALE : 2.000000:1.000000

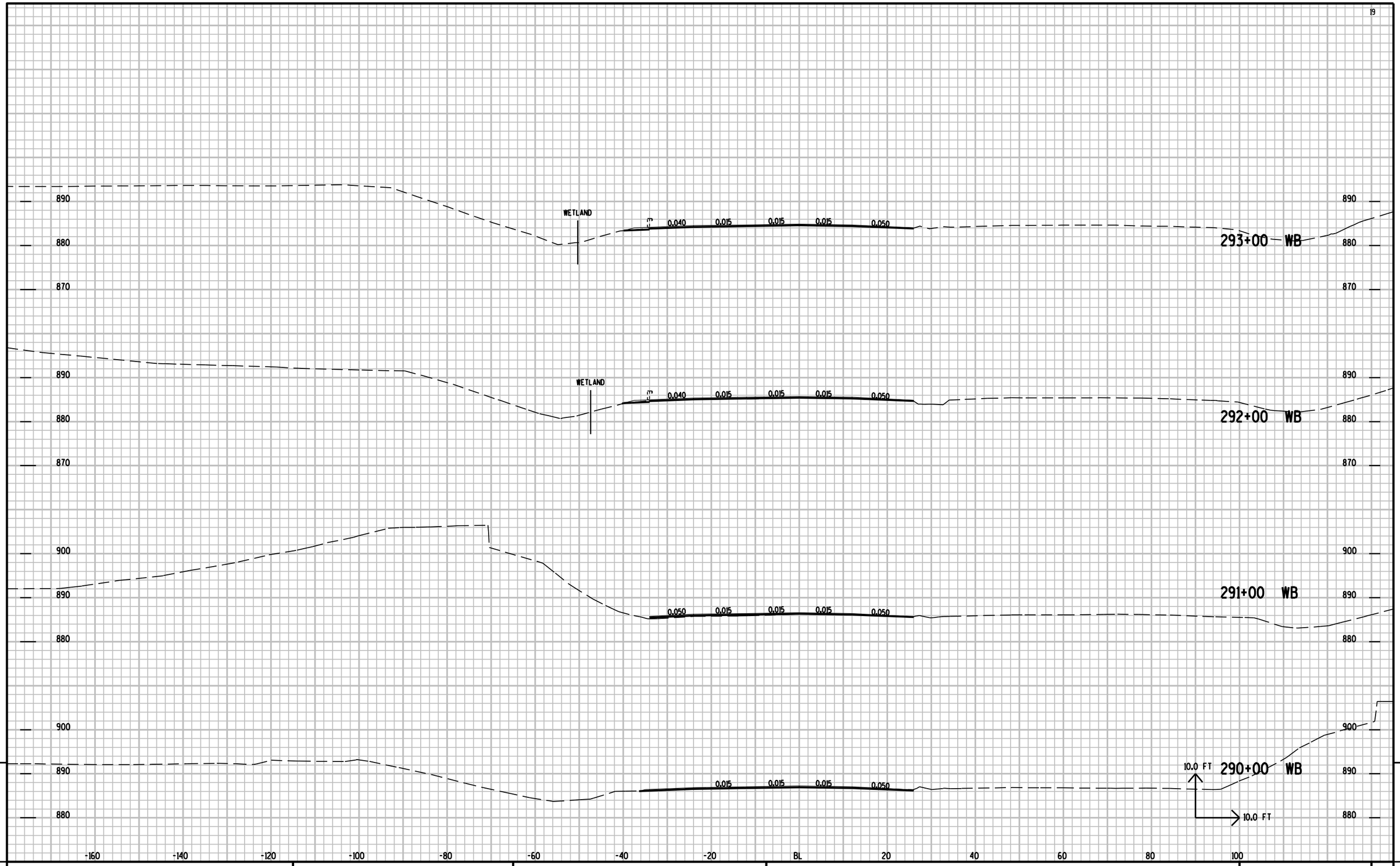

9

9

PROJECT NO: 1010-00-72	HWY: IH 39	COUNTY: DANE	CROSS SECTIONS: WB LANES	SHEET NO:	E

FILE NAME : r:\Support\CADDS\Projects\d1_10100072\090202_XS.DGN PLOT DATE : 25-APR-2012 10:19 PLOT BY : DOTJ3J PLOT NAME : PLOT SCALE : 2.000000:1.000000

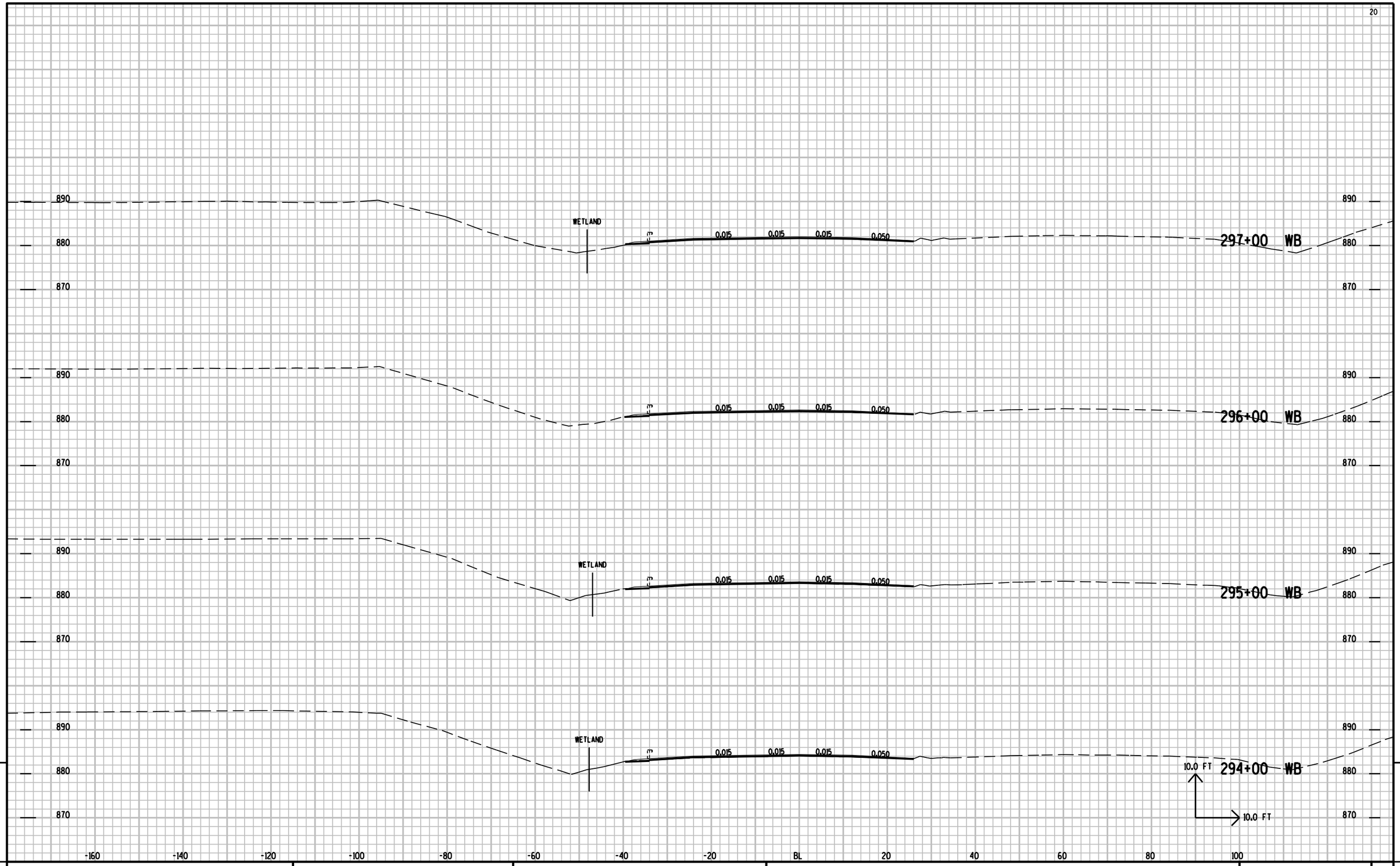

9

9

PROJECT NO: 1010-00-72	HWY: IH 39	COUNTY: DANE	CROSS SECTIONS: WB LANES	SHEET NO:	E

FILE NAME : r:\Support\CADDS\Projects\d1_10100072\090202_XS.DGN PLOT DATE : 25-APR-2012 10:19 PLOT BY : DOTJ3J PLOT NAME : PLOT SCALE : 2.000000:1.000000

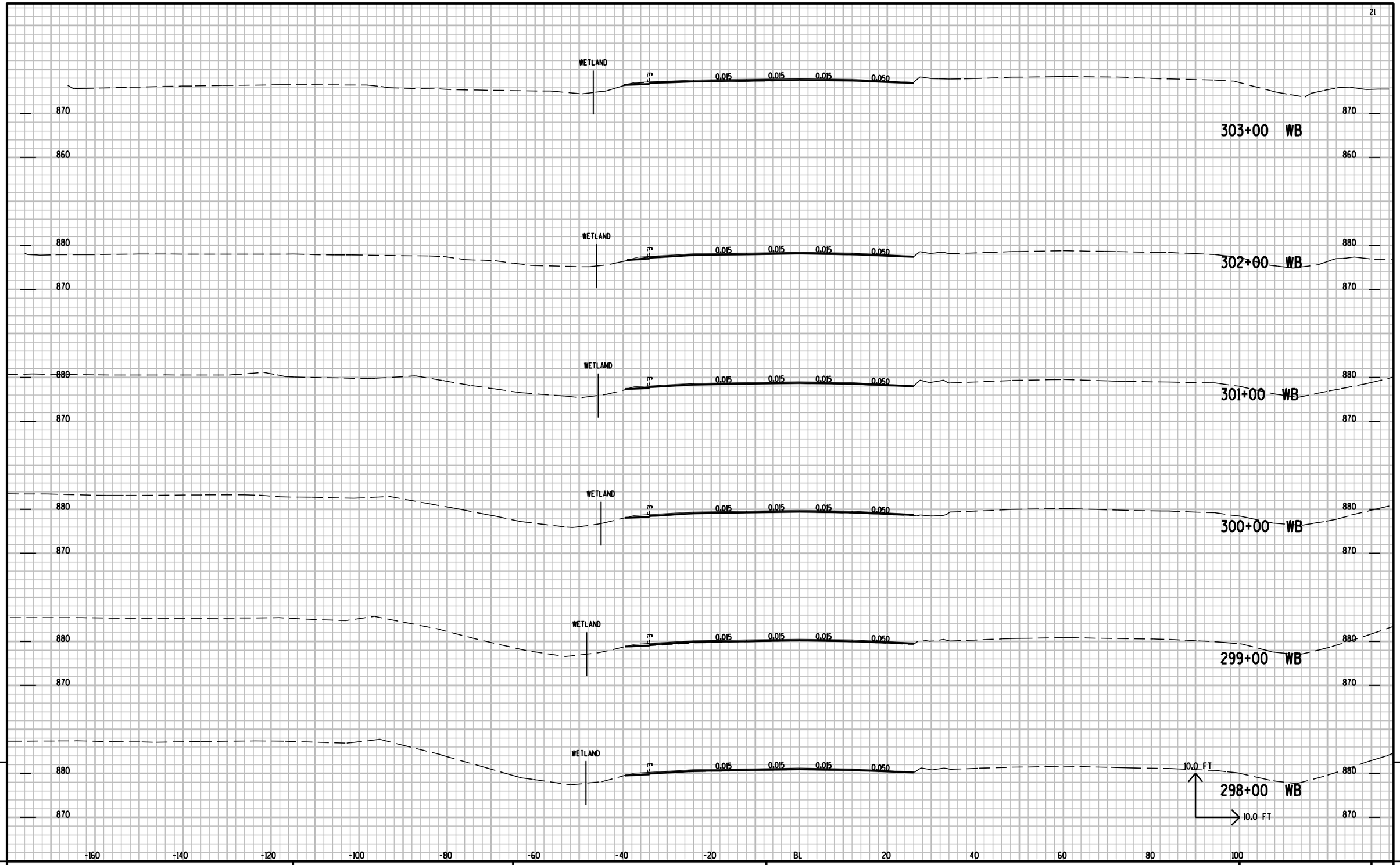

9

9

PROJECT NO: 1010-00-72	HWY: IH 39	COUNTY: DANE	CROSS SECTIONS: WB LANES	SHEET NO:	E

FILE NAME : r:\Support\CADDS\Projects\d1_10100072\090202_XS.DGN PLOT DATE : 25-APR-2012 10:19 PLOT BY : DOTJ3J PLOT NAME : PLOT SCALE : 2.000000:1.000000

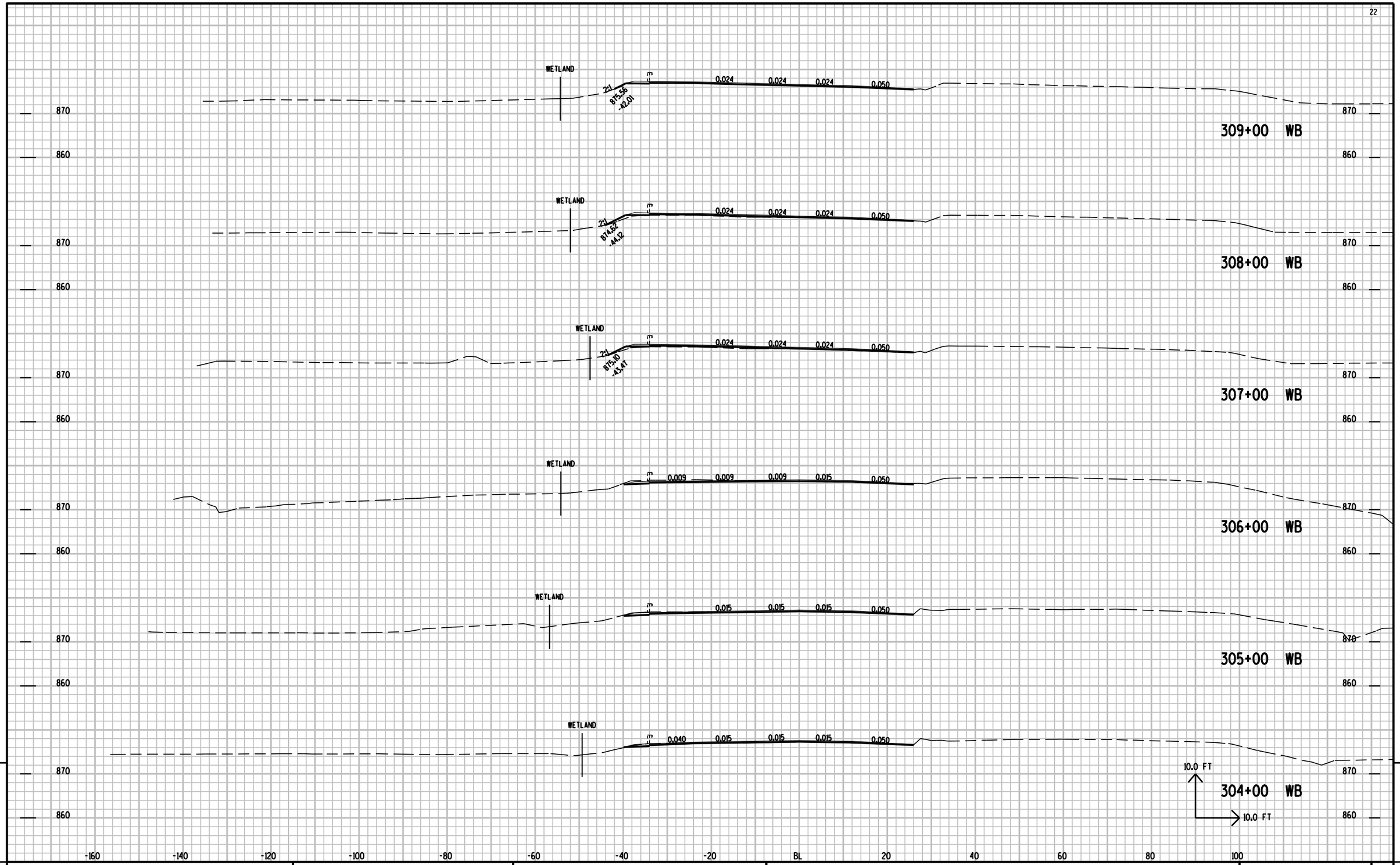

9

9

PROJECT NO: 1010-00-72	HWY: IH 39	COUNTY: DANE	CROSS SECTIONS: WB LANES	SHEET NO:	E

FILE NAME : r:\Support\CADDS\Projects\d1_10100072\090202_XS.DGN PLOT DATE : 25-APR-2012 10:19 PLOT BY : DOTJ3J PLOT NAME : PLOT SCALE : 2.000000:1.000000

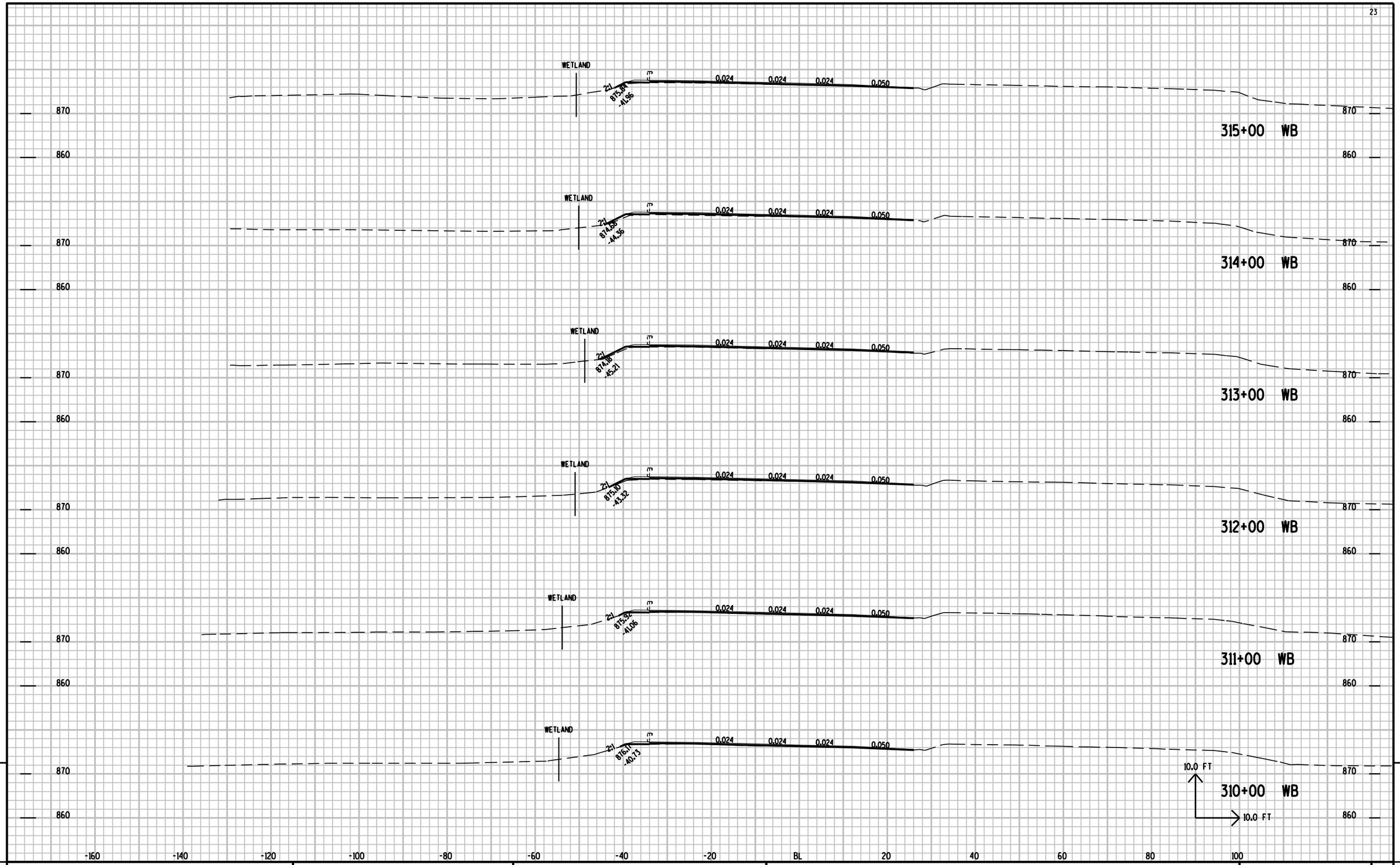

9

9

PROJECT NO: 1010-00-72	HWY: IH 39	COUNTY: DANE	CROSS SECTIONS: WB LANES	SHEET NO:	E

FILE NAME : r:\Support\CADDS\Projects\d1_10100072\090202_XS.DGN PLOT DATE : 25-APR-2012 10:19 PLOT BY : DOTJ3J PLOT NAME : PLOT SCALE : 2.000000:1.000000

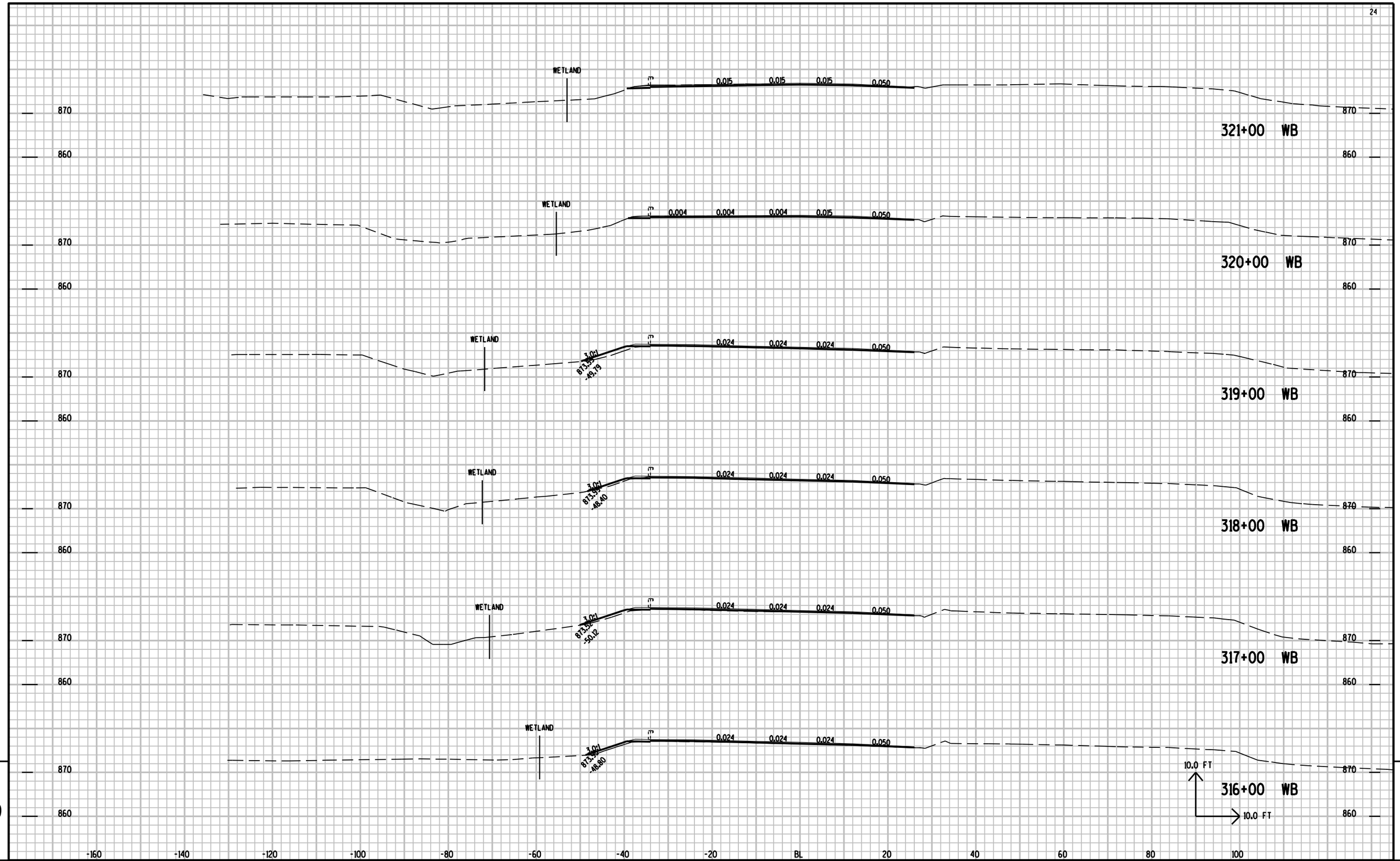

9

9

PROJECT NO: 1010-00-72	HWY: IH 39	COUNTY: DANE	CROSS SECTIONS: WB LANES	SHEET NO:	E

FILE NAME : r:\Support\CADDS\Projects\d1_10100072\090202_XS.DGN PLOT DATE : 25-APR-2012 10:20 PLOT BY : DOTJ3J PLOT NAME : PLOT SCALE : 2.000000:1.000000

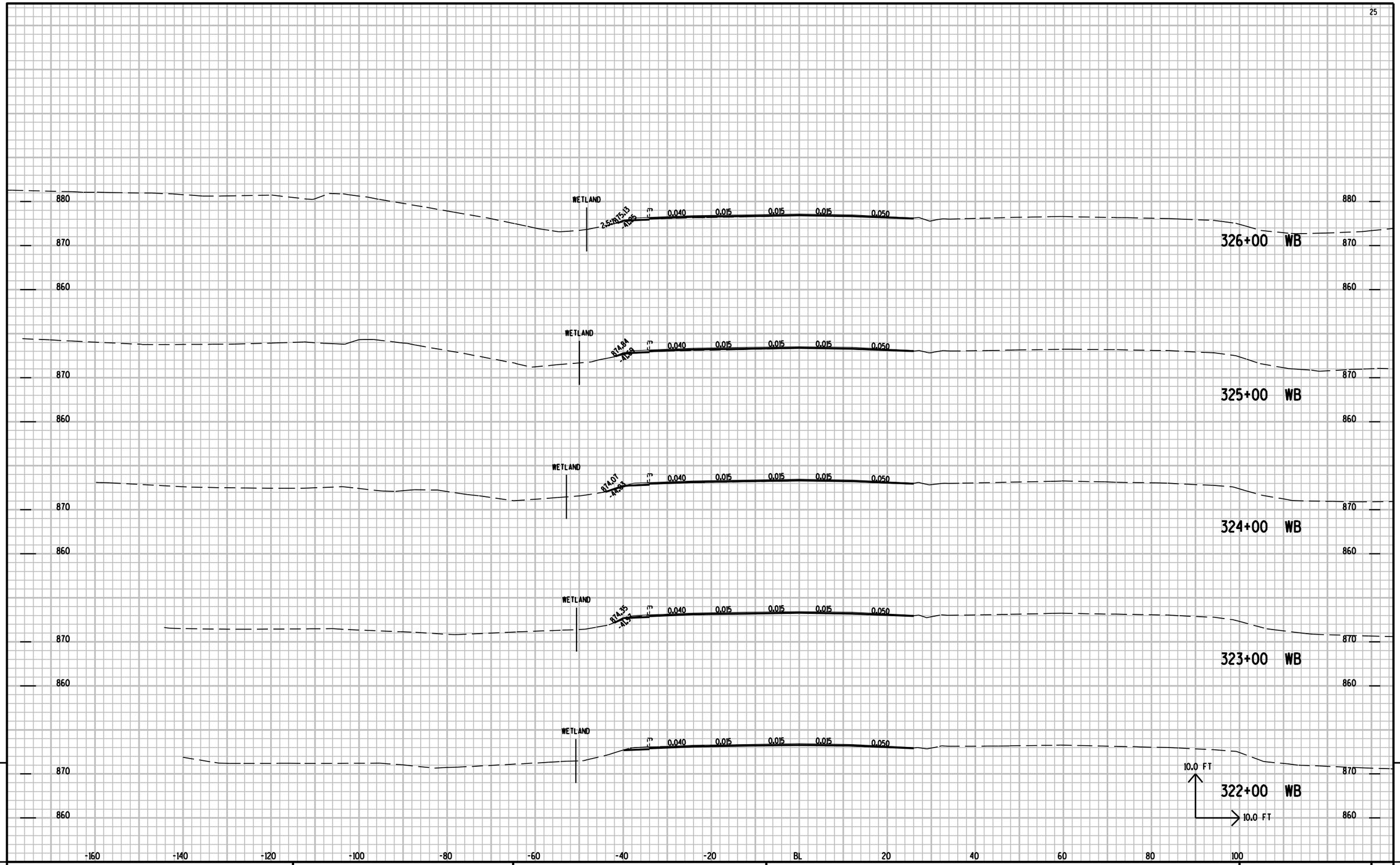

9

9

PROJECT NO: 1010-00-72	HWY: IH 39	COUNTY: DANE	CROSS SECTIONS: WB LANES	SHEET NO:	E

FILE NAME : r:\Support\CADDS\Projects\d1_10100072\090202_XS.DGN PLOT DATE : 25-APR-2012 10:20 PLOT BY : DOTJ3J PLOT NAME : PLOT SCALE : 2.000000:1.000000

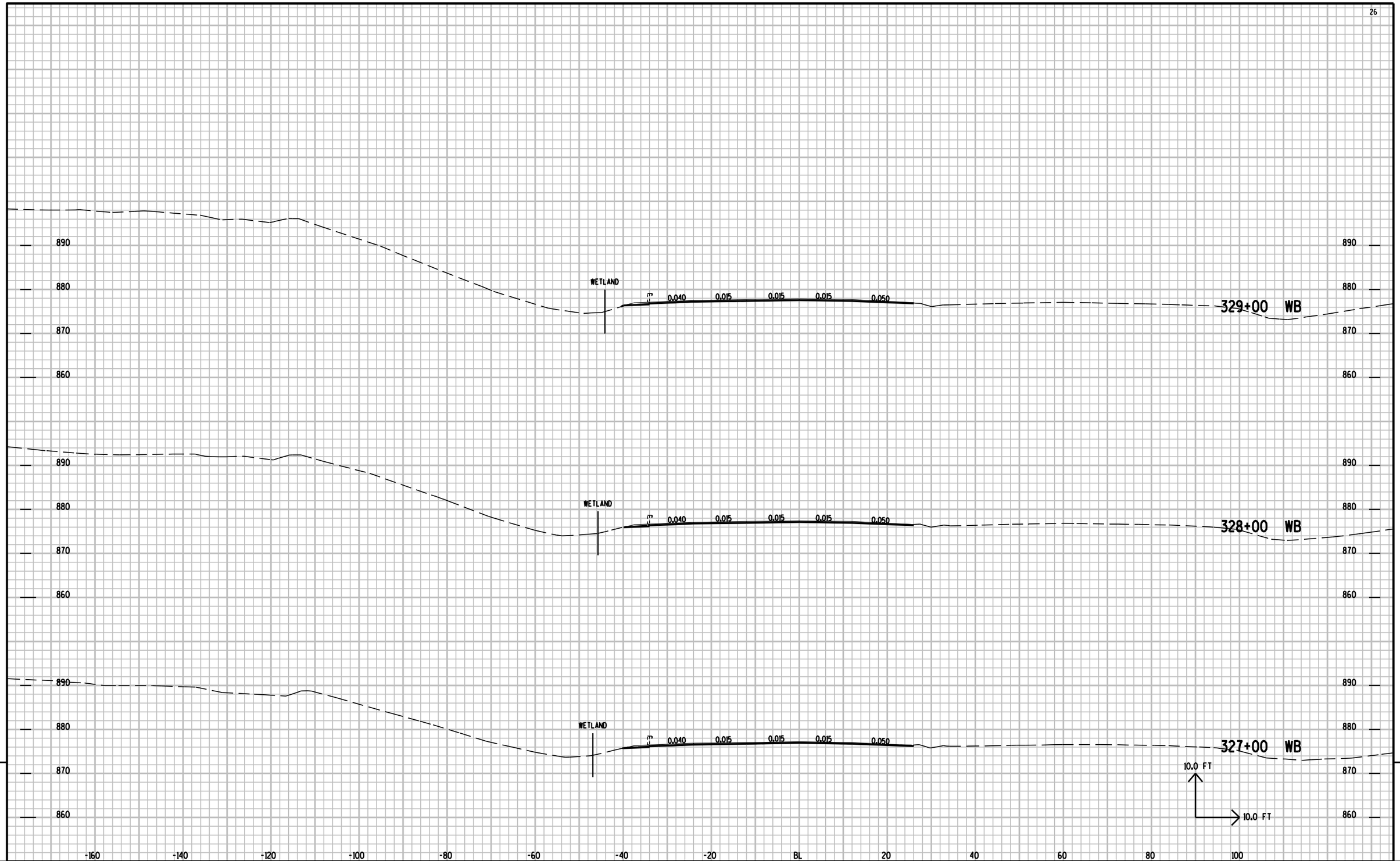

9

9

PROJECT NO: 1010-00-72	HWY: IH 39	COUNTY: DANE	CROSS SECTIONS: WB LANES	SHEET NO:	E

FILE NAME : r:\Support\CADDS\Projects\d1_10100072\090202_XS.DGN PLOT DATE : 25-APR-2012 10:20 PLOT BY : DOTJ3J PLOT NAME : PLOT SCALE : 2.000000:1.000000

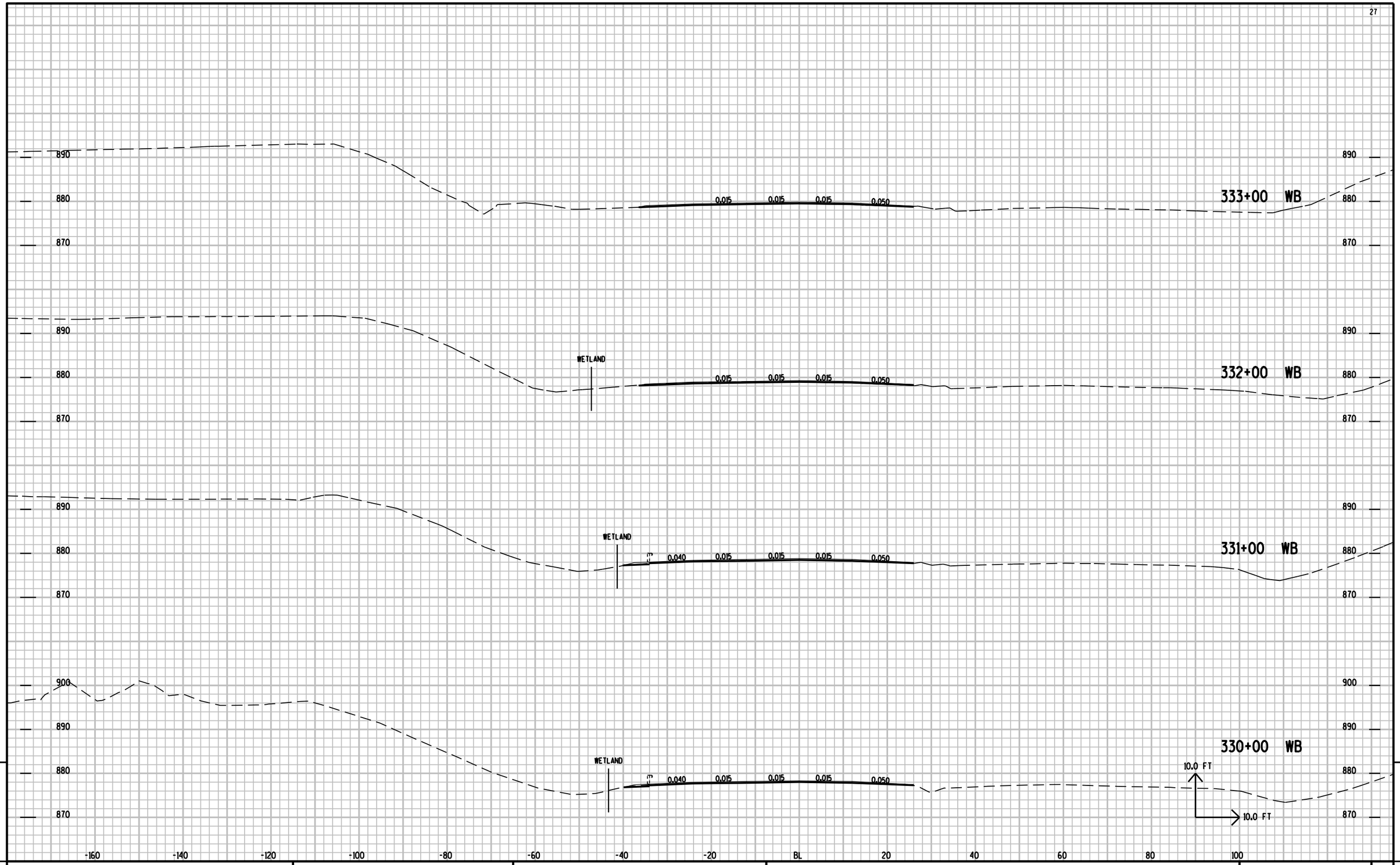

9

9

PROJECT NO: 1010-00-72	HWY: IH 39	COUNTY: DANE	CROSS SECTIONS: WB LANES	SHEET NO:	E

FILE NAME : r:\Support\CADDS\Projects\d1_10100072\090202_XS.DGN PLOT DATE : 25-APR-2012 10:20 PLOT BY : DOTJ3J PLOT NAME : PLOT SCALE : 2.000000:1.000000

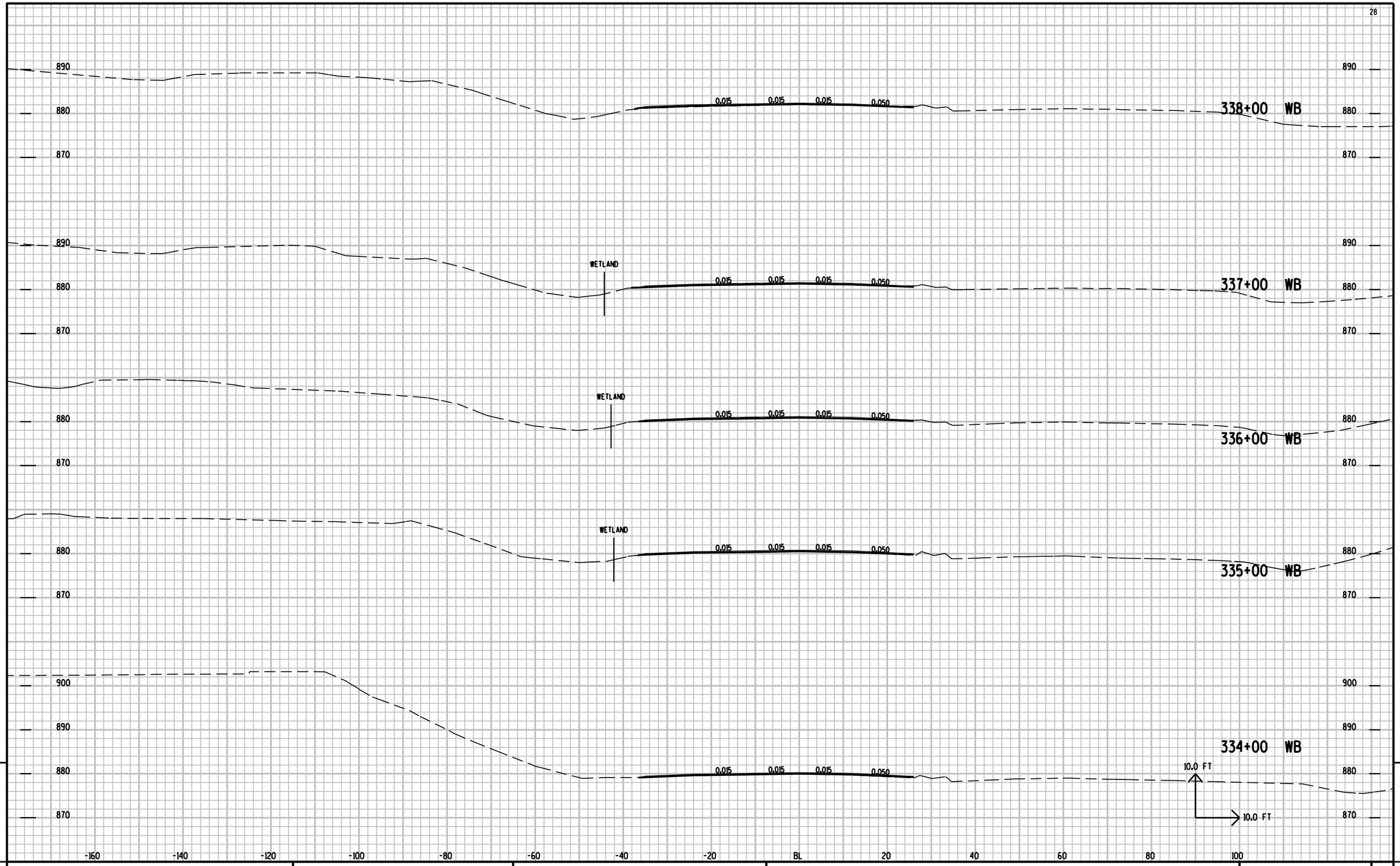

9

9

PROJECT NO: 1010-00-72	HWY: IH 39	COUNTY: DANE	CROSS SECTIONS: WB LANES	SHEET NO:	E

FILE NAME : r:\Support\CADDS\Projects\d1_10100072\090202_XS.DGN PLOT DATE : 25-APR-2012 10:20 PLOT BY : DOTJ3J PLOT NAME : PLOT SCALE : 2.000000:1.000000

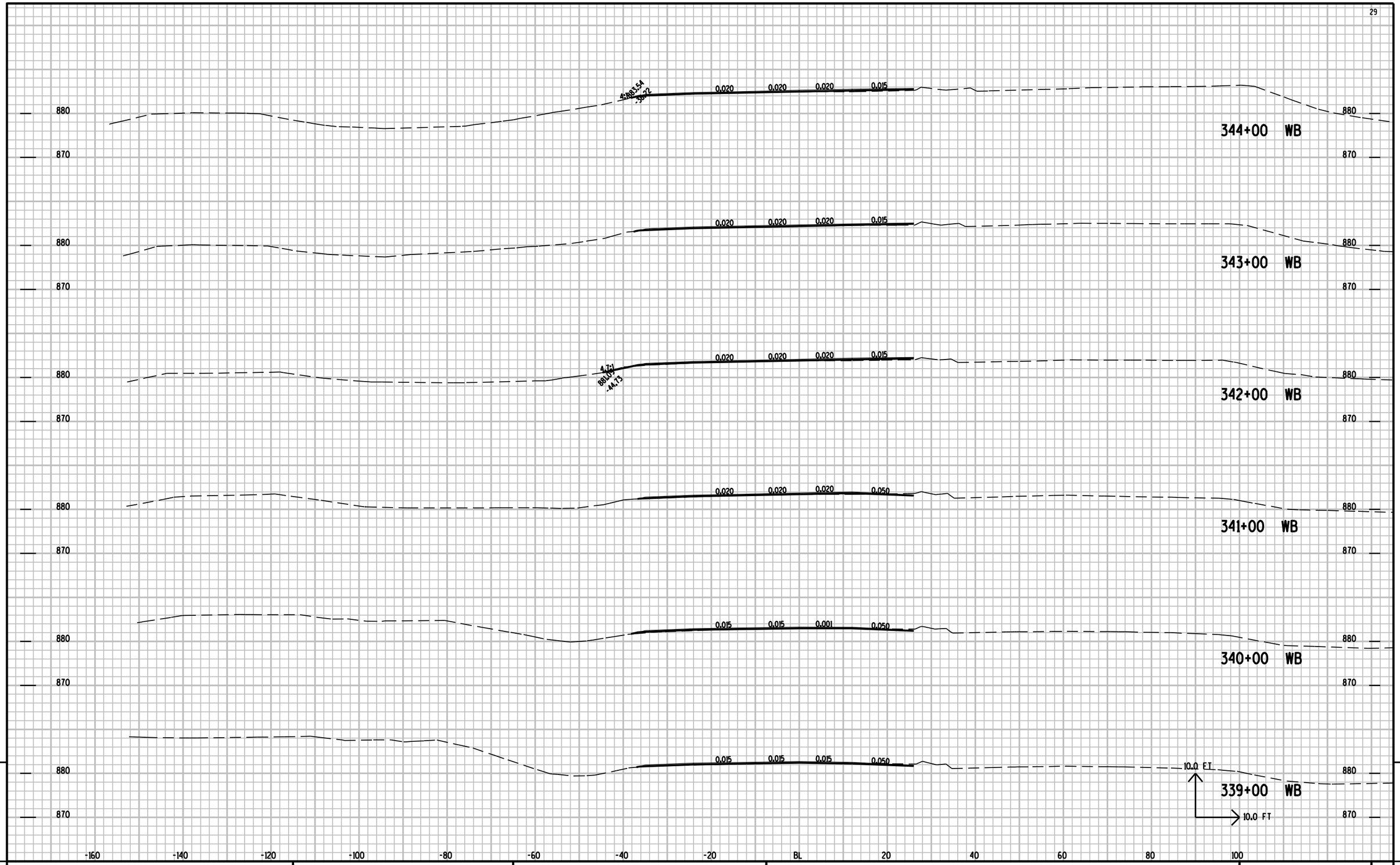

9

9

PROJECT NO: 1010-00-72	HWY: IH 39	COUNTY: DANE	CROSS SECTIONS: WB LANES	SHEET NO:	E

FILE NAME : r:\Support\CADDS\Projects\d1_10100072\090202_XS.DGN PLOT DATE : 25-APR-2012 10:20 PLOT BY : DOTJ3J PLOT NAME : PLOT SCALE : 2.000000:1.000000

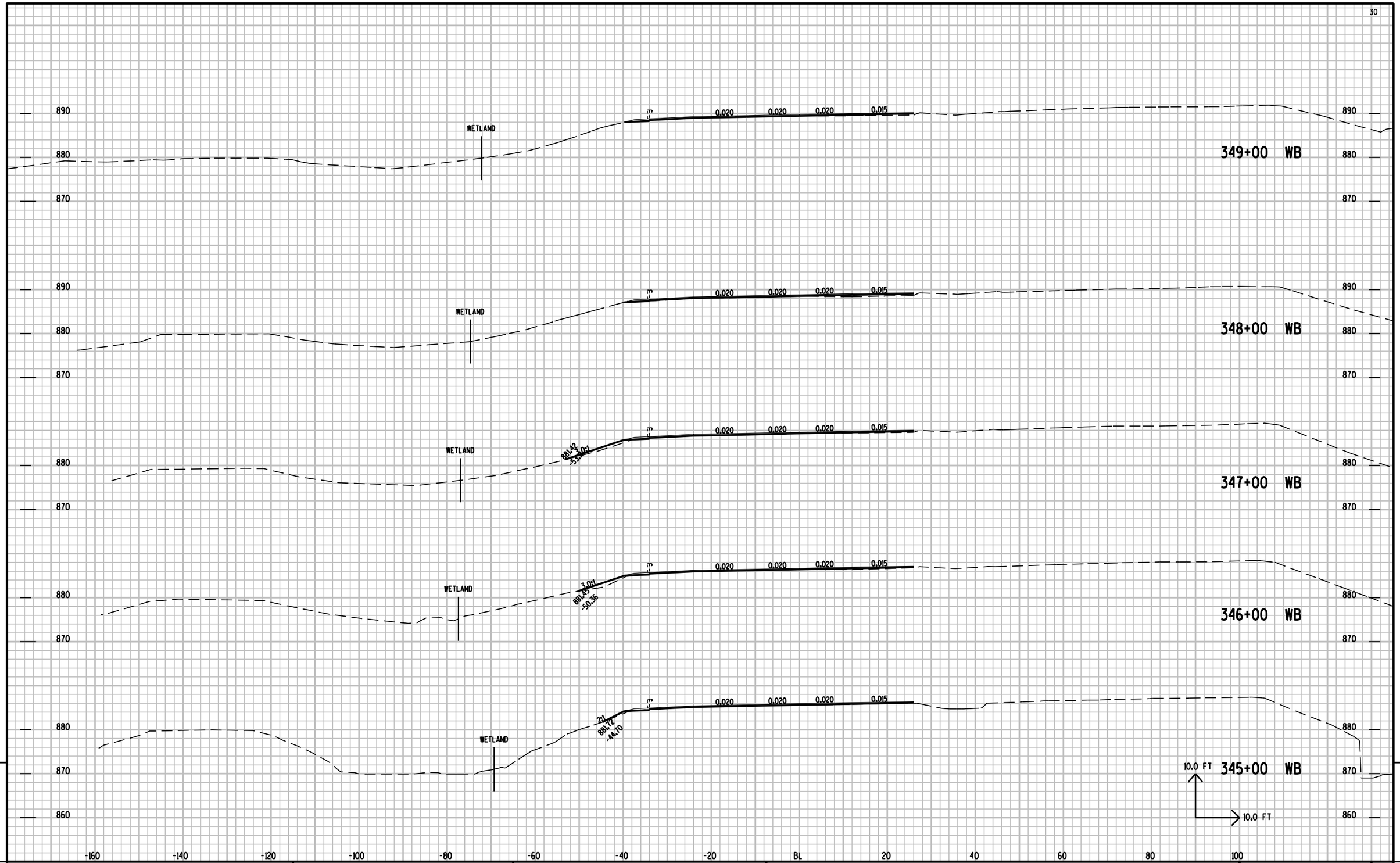

9

9

PROJECT NO: 1010-00-72	HWY: IH 39	COUNTY: DANE	CROSS SECTIONS: WB LANES	SHEET NO:	E

FILE NAME : r:\Support\CADDS\Projects\d1_10100072\090202_XS.DGN PLOT DATE : 25-APR-2012 10:21 PLOT BY : DOTJ3J PLOT NAME : PLOT SCALE : 2.000000:1.000000

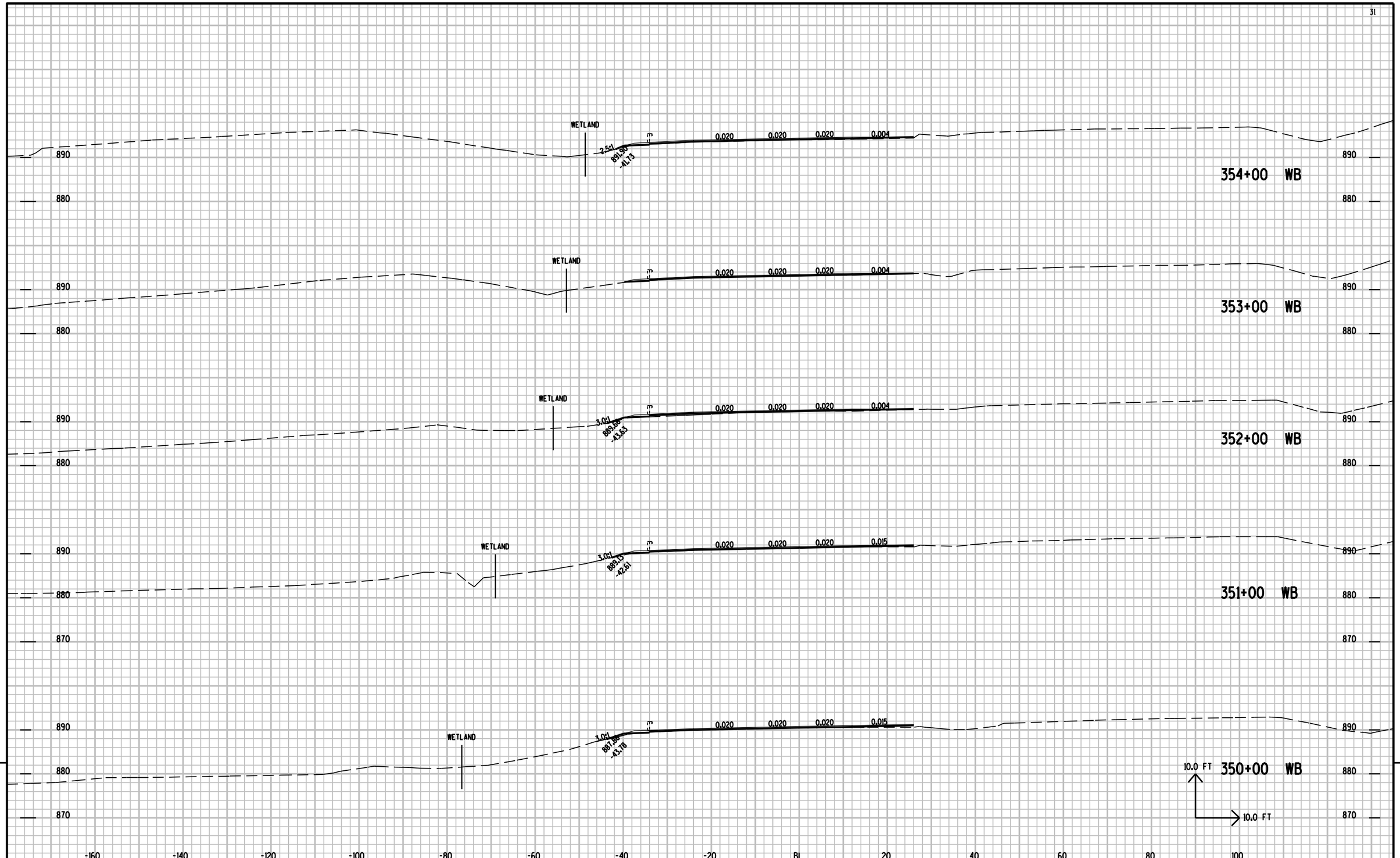

9

9

PROJECT NO: 1010-00-72	HWY: IH 39	COUNTY: DANE	CROSS SECTIONS: WB LANES	SHEET NO:	E

FILE NAME : r:\Support\CADDS\Projects\d1_10100072\090202_XS.DGN PLOT DATE : 25-APR-2012 10:21 PLOT BY : DOTJ3J PLOT NAME : PLOT SCALE : 2.000000:1.000000

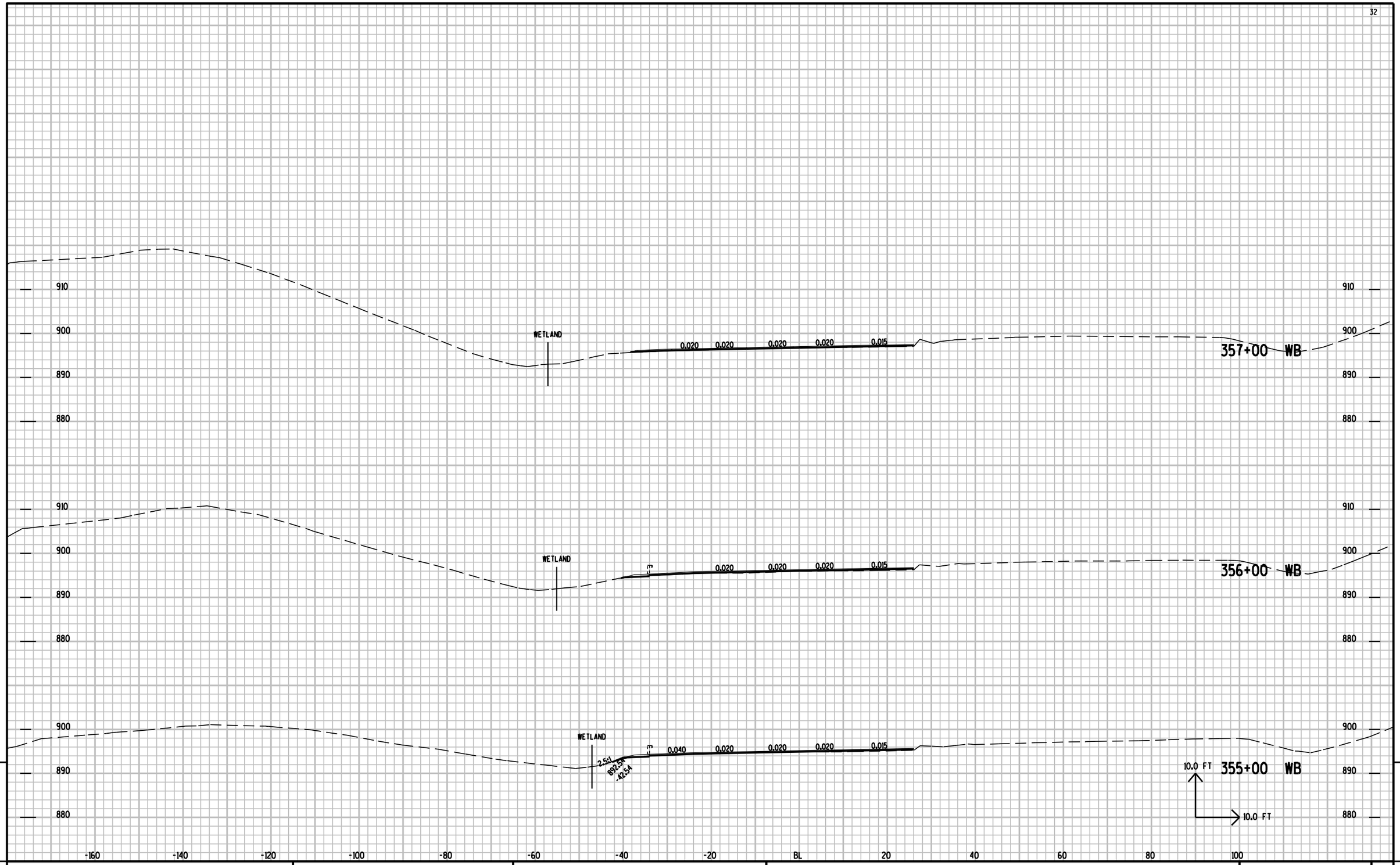

9

9

PROJECT NO: 1010-00-72	HWY: IH 39	COUNTY: DANE	CROSS SECTIONS: WB LANES	SHEET NO:	E

FILE NAME : r:\Support\CADDS\Projects\d1_10100072\090202_XS.DGN PLOT DATE : 25-APR-2012 10:21 PLOT BY : DOTJ3J PLOT NAME : PLOT SCALE : 2.000000:1.000000

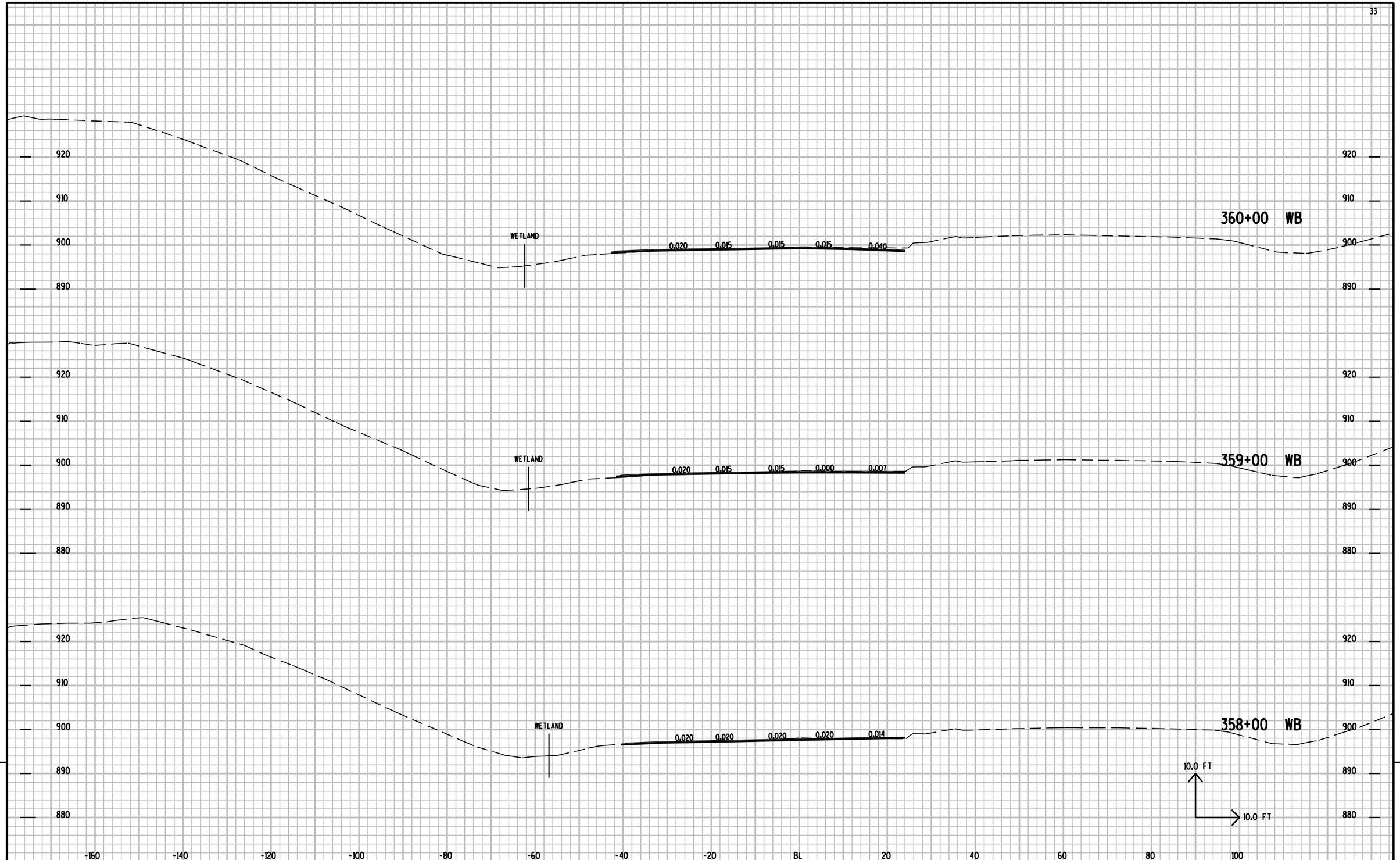

9 9

PROJECT NO: 1010-00-72	HWY: IH 39	COUNTY: DANE	CROSS SECTIONS: WB LANES	SHEET NO:	E

FILE NAME : r:\Support\CADDS\Projects\d1_10100072\090202_XS.DGN PLOT DATE : 25-APR-2012 10:21 PLOT BY : DOTJ3J PLOT NAME : PLOT SCALE : 2.000000:1.000000

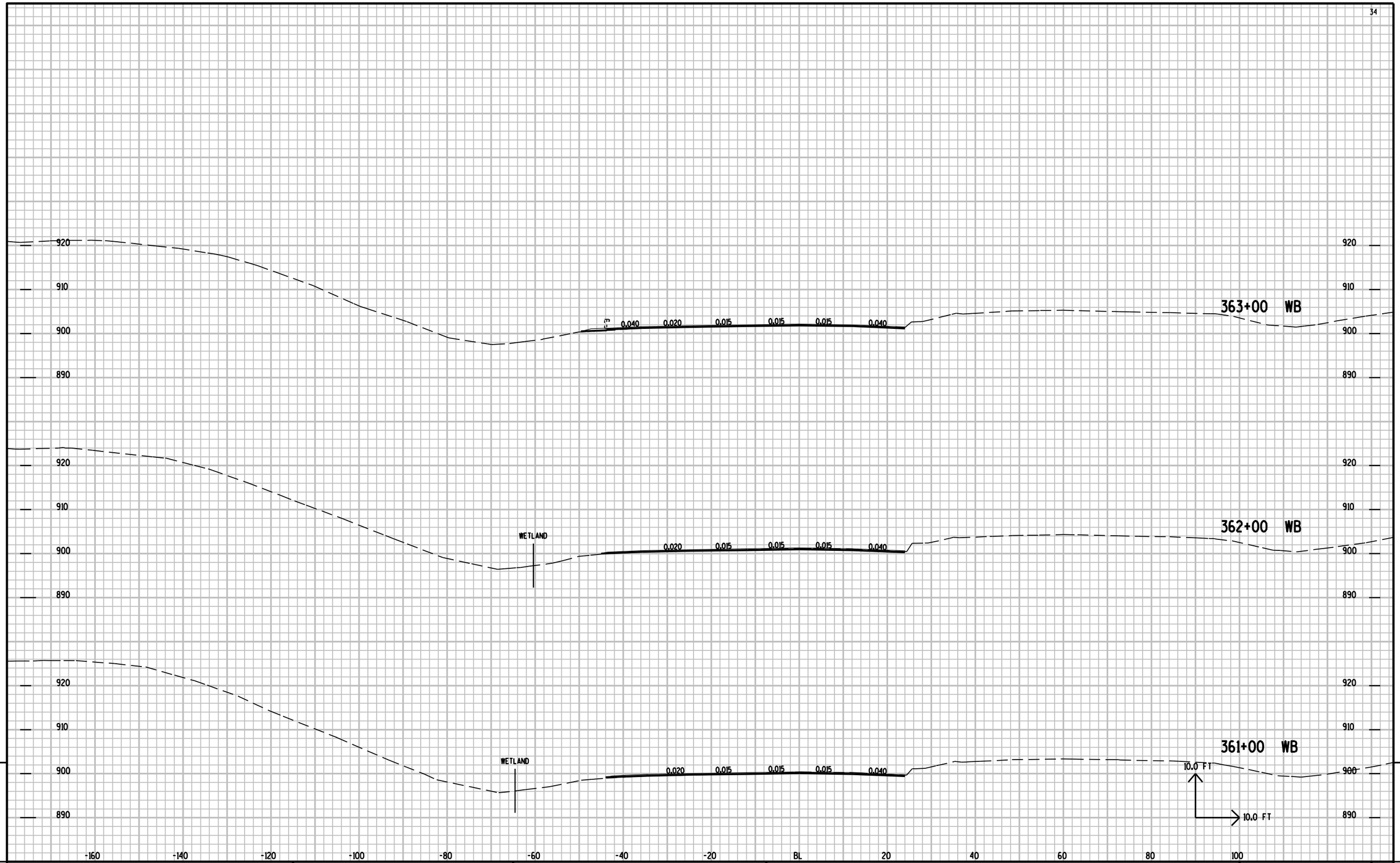

9

9

PROJECT NO: 1010-00-72	HWY: IH 39	COUNTY: DANE	CROSS SECTIONS: WB LANES	SHEET NO:	E

FILE NAME : r:\Support\CADDS\Projects\d1_10100072\090202_XS.DGN PLOT DATE : 25-APR-2012 10:21 PLOT BY : DOTJ3J PLOT NAME : PLOT SCALE : 2.000000:1.000000

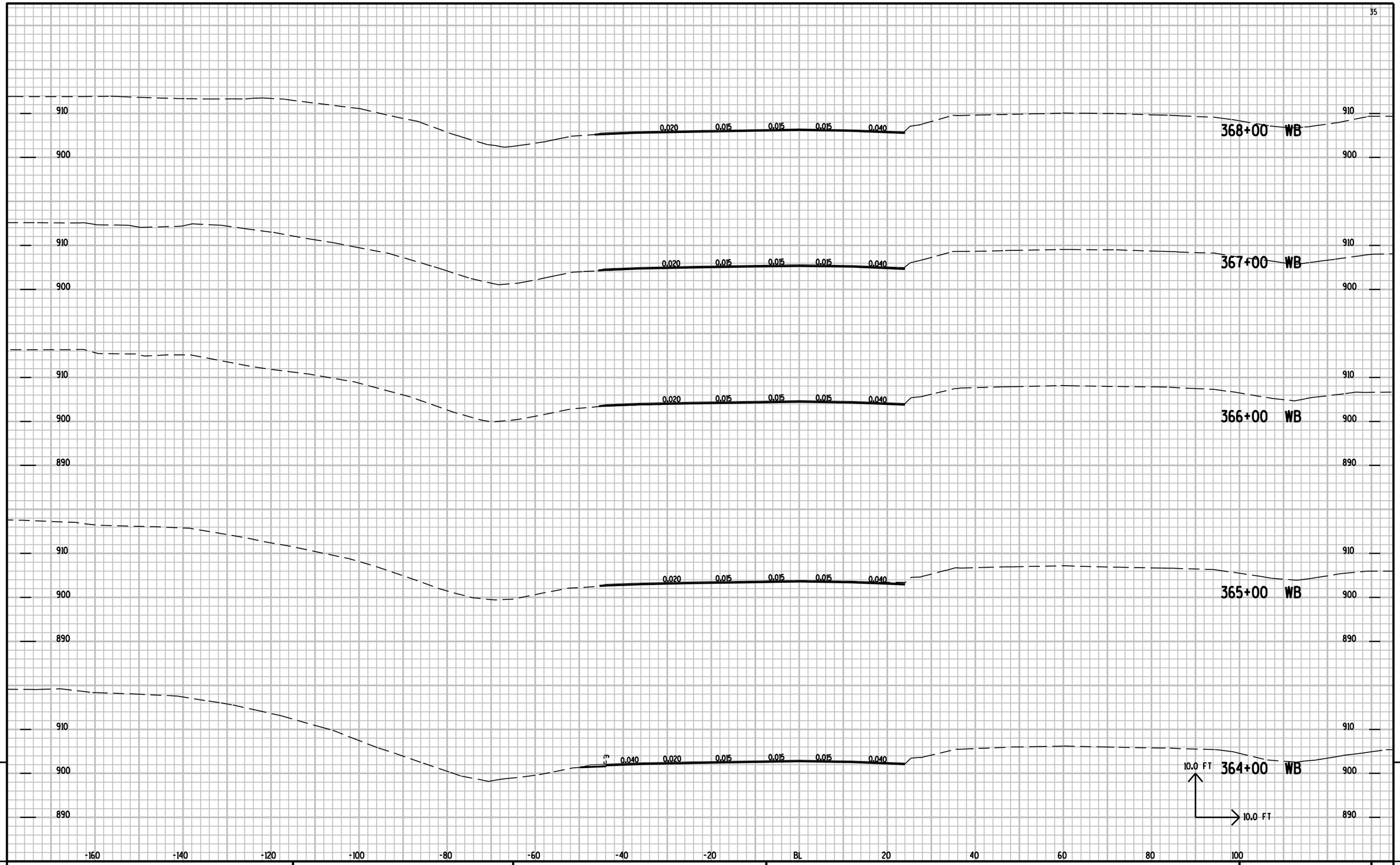

9

9

PROJECT NO: 1010-00-72	HWY: IH 39	COUNTY: DANE	CROSS SECTIONS: WB LANES	SHEET NO:	E

FILE NAME : r:\Support\CADDS\Projects\d1_10100072\090202_XS.DGN PLOT DATE : 25-APR-2012 10:21 PLOT BY : DOTJ3J PLOT NAME : PLOT SCALE : 2.000000:1.000000

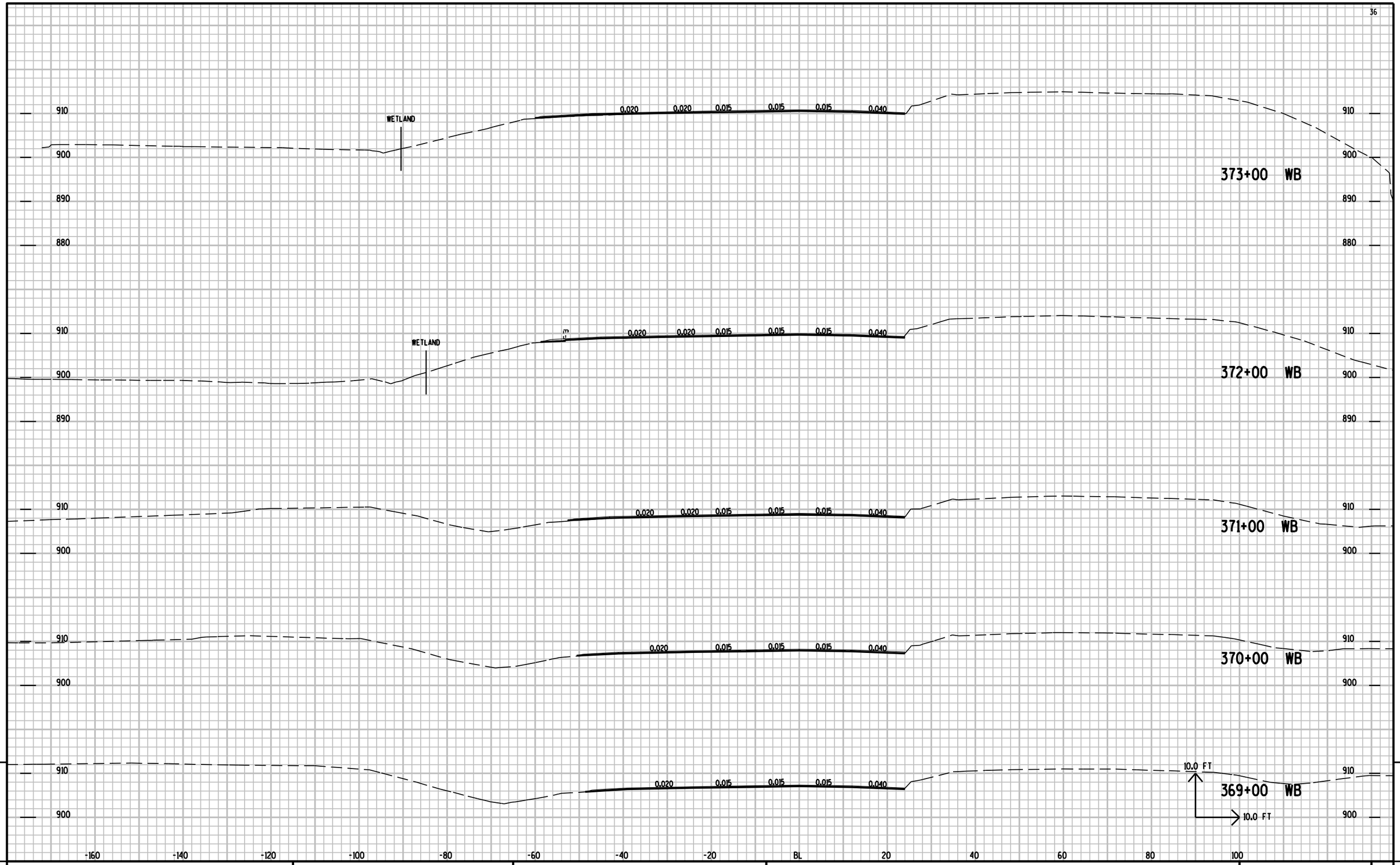

9

9

PROJECT NO: 1010-00-72	HWY: IH 39	COUNTY: DANE	CROSS SECTIONS: WB LANES	SHEET NO:	E

FILE NAME : r:\Support\CADDS\Projects\d1_10100072\090202_XS.DGN PLOT DATE : 25-APR-2012 10:22 PLOT BY : DOTJ3J PLOT NAME : PLOT SCALE : 2.000000:1.000000

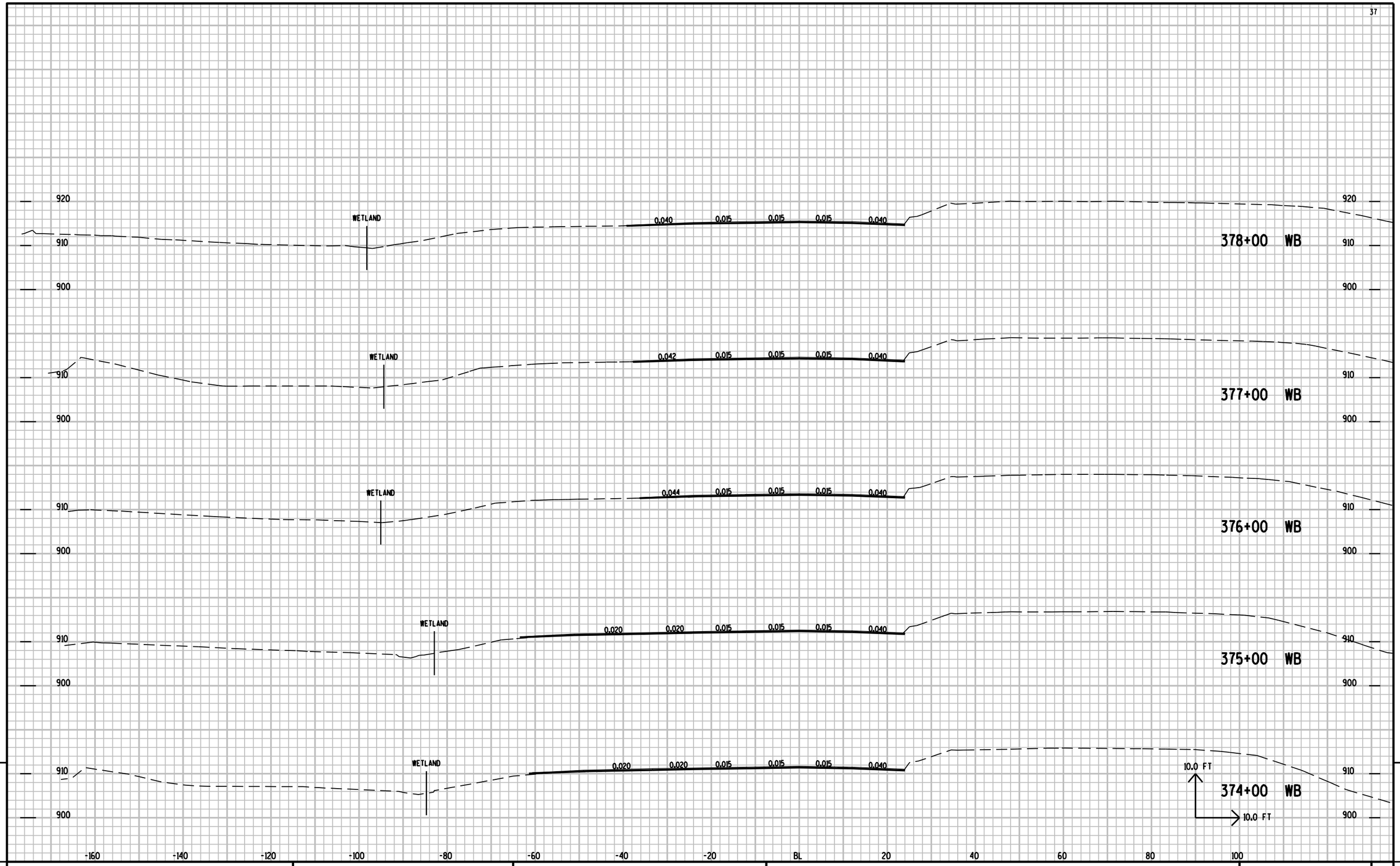

9

9

PROJECT NO: 1010-00-72	HWY: IH 39	COUNTY: DANE	CROSS SECTIONS: WB LANES	SHEET NO:	E

FILE NAME : r:\Support\CADDS\Projects\d1_10100072\090202_XS.DGN PLOT DATE : 25-APR-2012 10:22 PLOT BY : DOTJ3J PLOT NAME : PLOT SCALE : 2.000000:1.000000

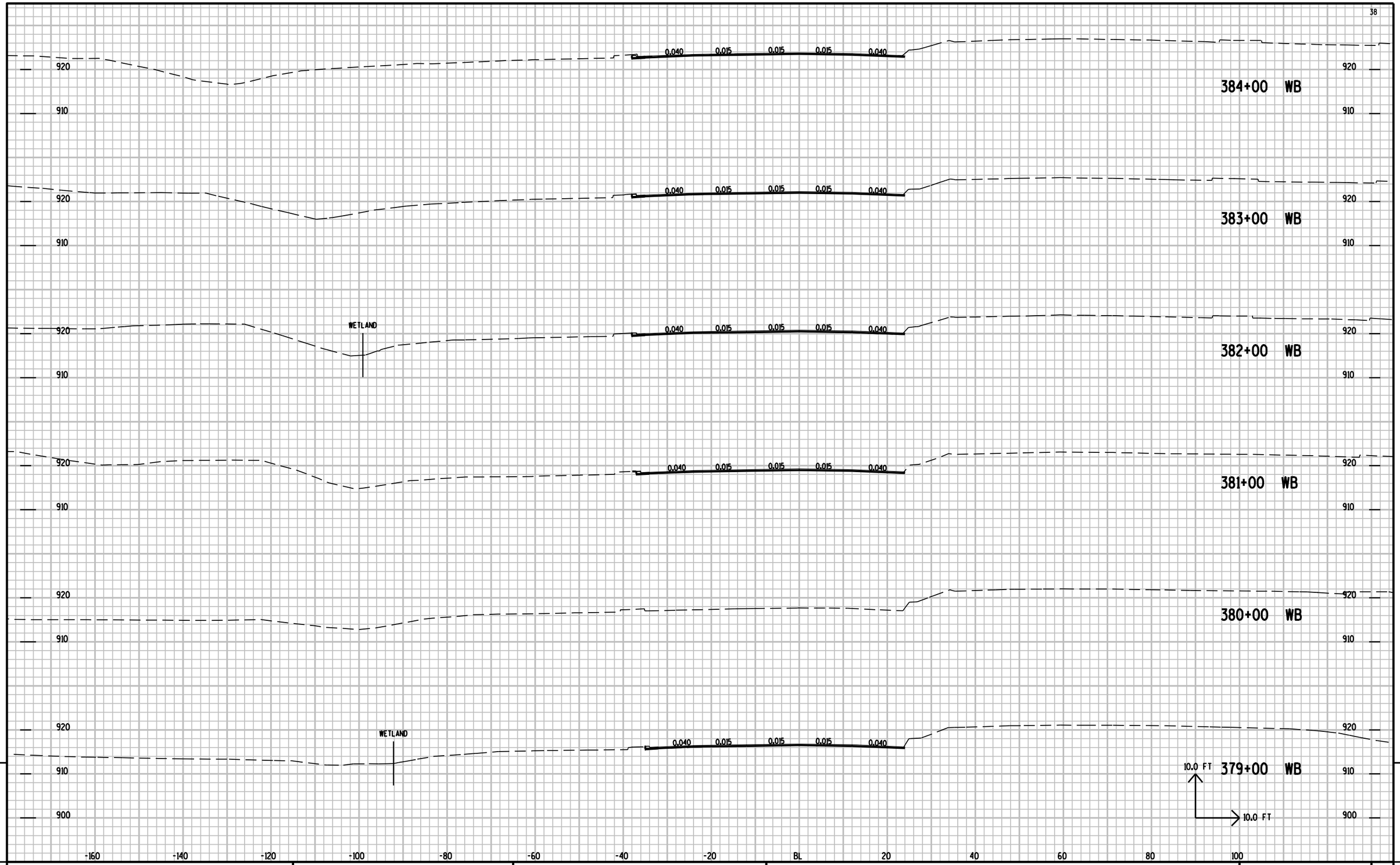

PROJECT NO: 1010-00-72	HWY: IH 39	COUNTY: DANE	CROSS SECTIONS: WB LANES	SHEET NO:	E

FILE NAME : r:\Support\CADDS\Projects\d1_10100072\090202_XS.DGN PLOT DATE : 25-APR-2012 10:22 PLOT BY : DOTJ3J PLOT NAME : PLOT SCALE : 2.000000:1.000000

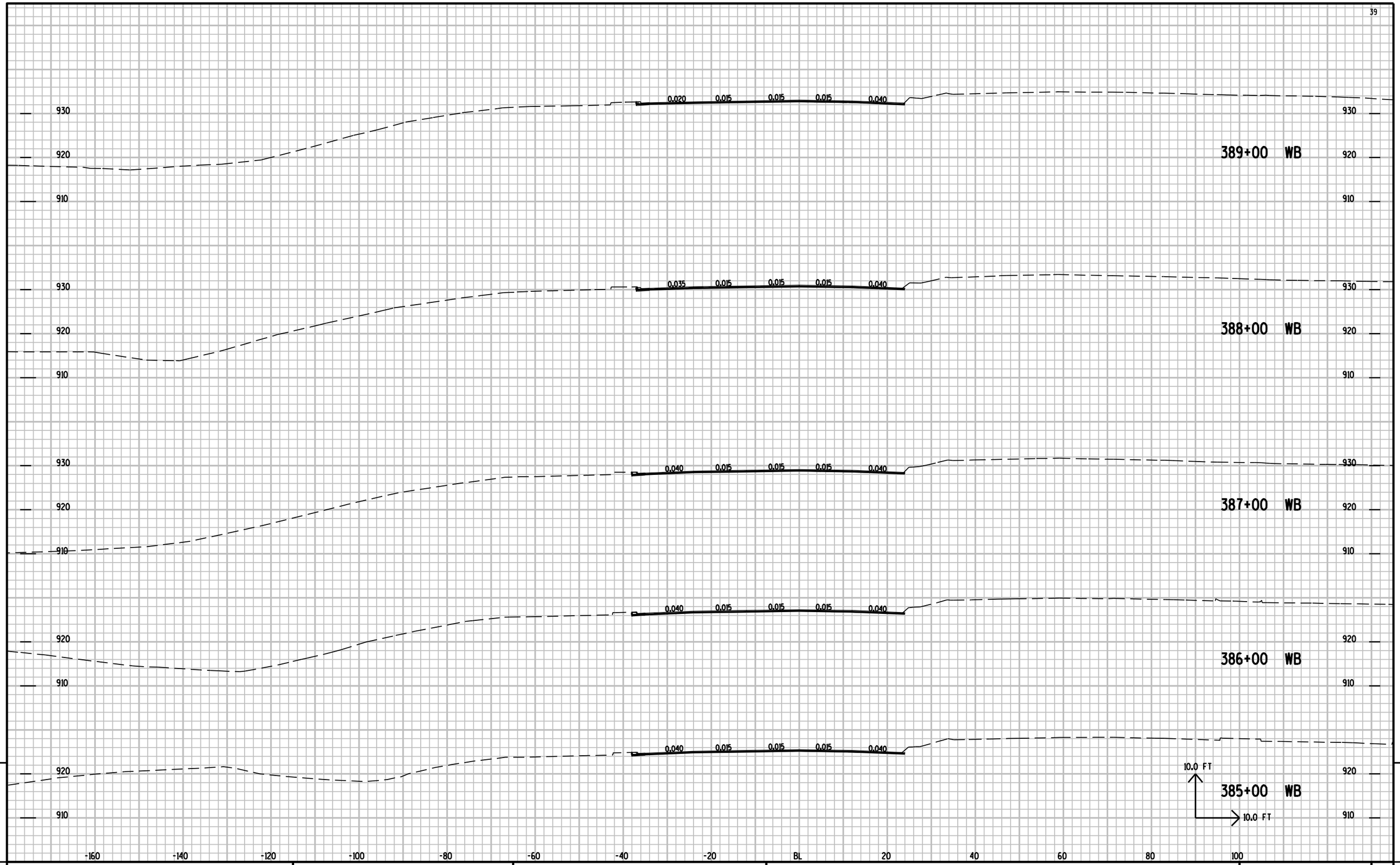

9 9

PROJECT NO: 1010-00-72	HWY: IH 39	COUNTY: DANE	CROSS SECTIONS: WB LANES	SHEET NO:	E

FILE NAME : r:\Support\CADDS\Projects\d1_10100072\090202_XS.DGN PLOT DATE : 25-APR-2012 10:22 PLOT BY : DOTJ3J PLOT NAME : PLOT SCALE : 2.000000:1.000000

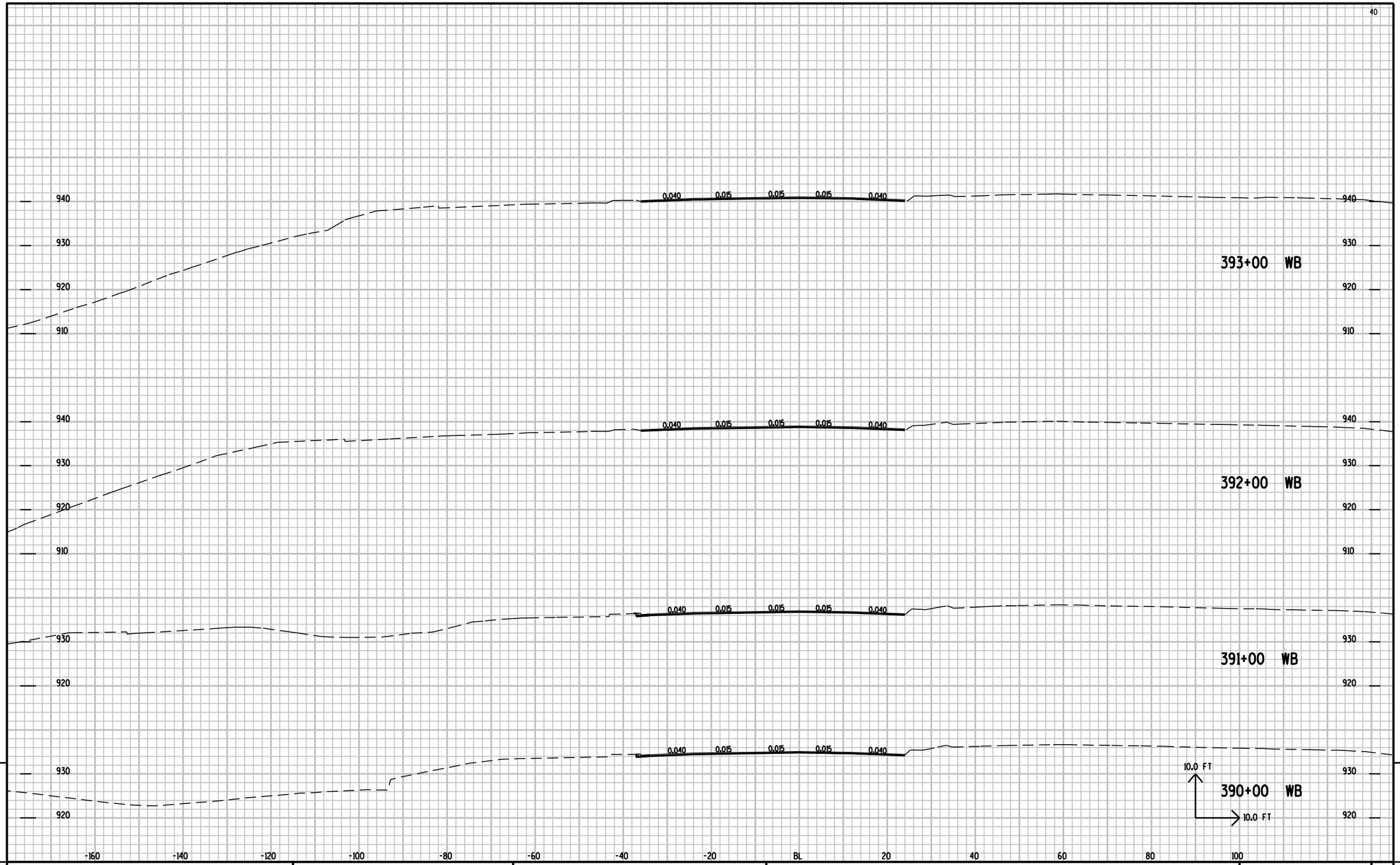

9

9

PROJECT NO: 1010-00-72	HWY: IH 39	COUNTY: DANE	CROSS SECTIONS: WB LANES	SHEET NO:	E

FILE NAME : r:\Support\CADDS\Projects\d1_10100072\090202_XS.DGN PLOT DATE : 25-APR-2012 10:22 PLOT BY : DOTJ3J PLOT NAME : PLOT SCALE : 2.000000:1.000000

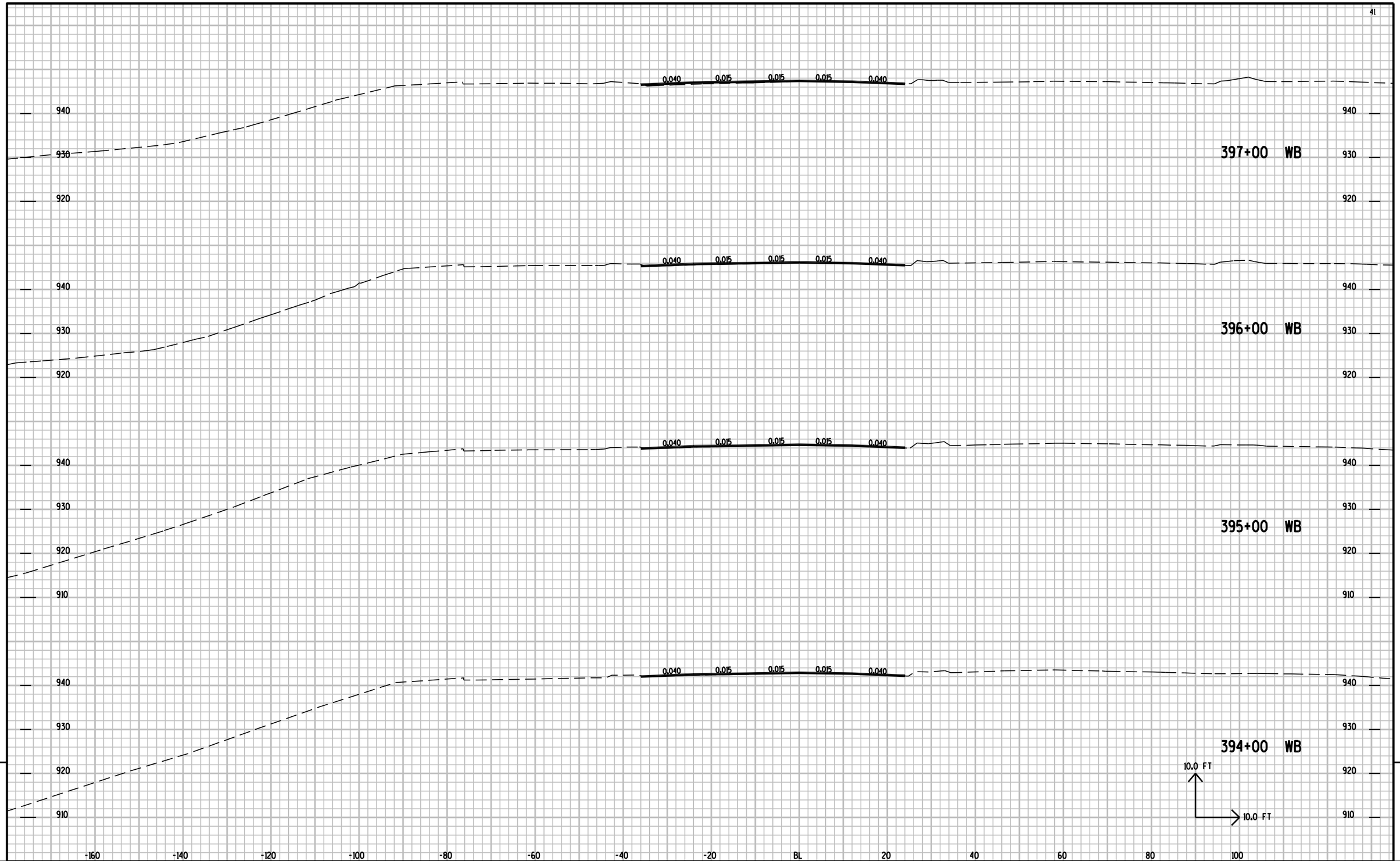

9

9

PROJECT NO: 1010-00-72	HWY: IH 39	COUNTY: DANE	CROSS SECTIONS: WB LANES	SHEET NO:	E

FILE NAME : r:\Support\CADDS\Projects\d1_10100072\090202_XS.DGN PLOT DATE : 25-APR-2012 10:23 PLOT BY : DOTJ3J PLOT NAME : PLOT SCALE : 2.000000:1.000000

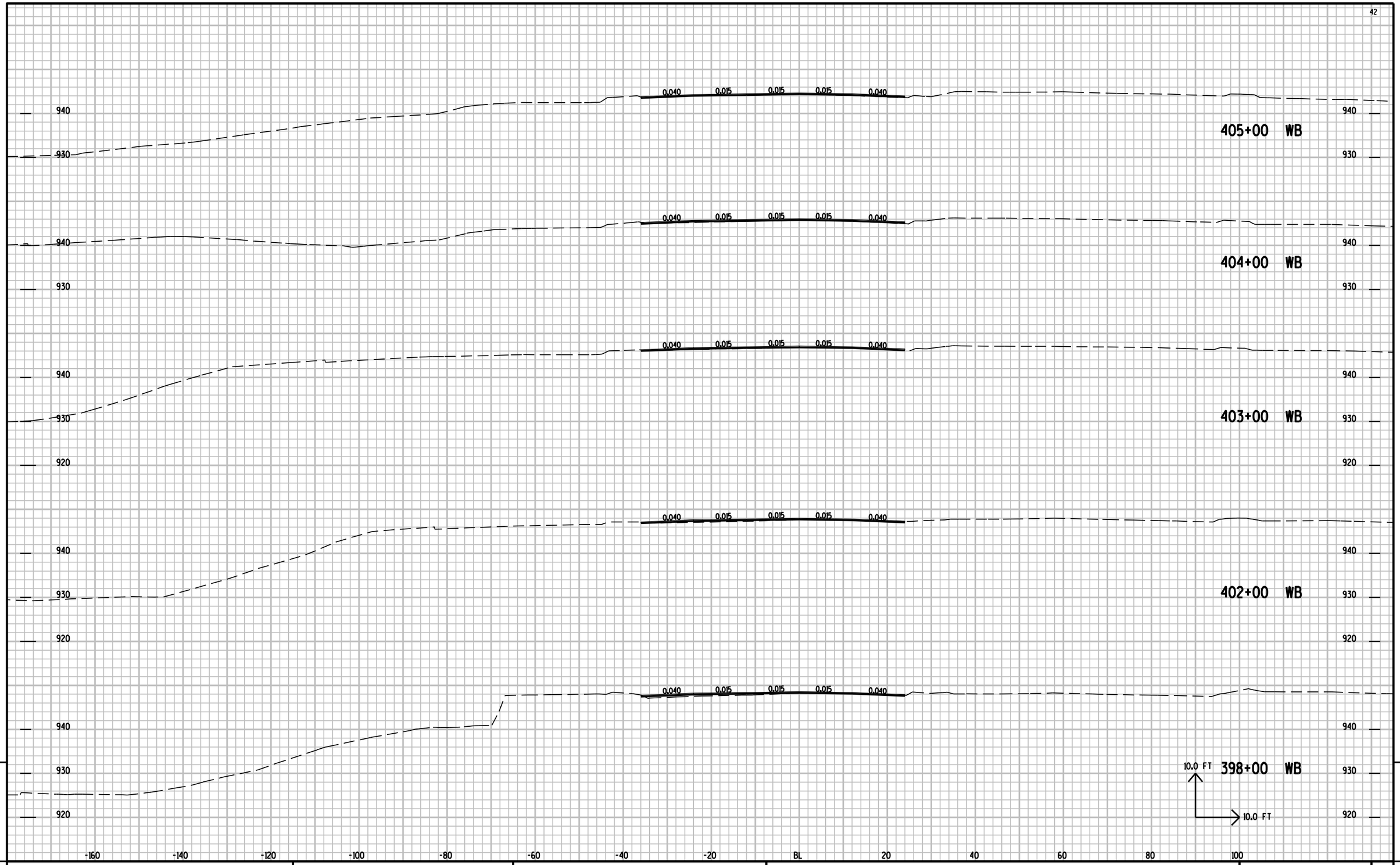

9

9

PROJECT NO: 1010-00-72	HWY: IH 39	COUNTY: DANE	CROSS SECTIONS: WB LANES	SHEET NO:	E

FILE NAME : r:\Support\CADDS\Projects\d1_10100072\090202_XS.DGN PLOT DATE : 25-APR-2012 10:23 PLOT BY : DOTJ3J PLOT NAME : PLOT SCALE : 2.000000:1.000000

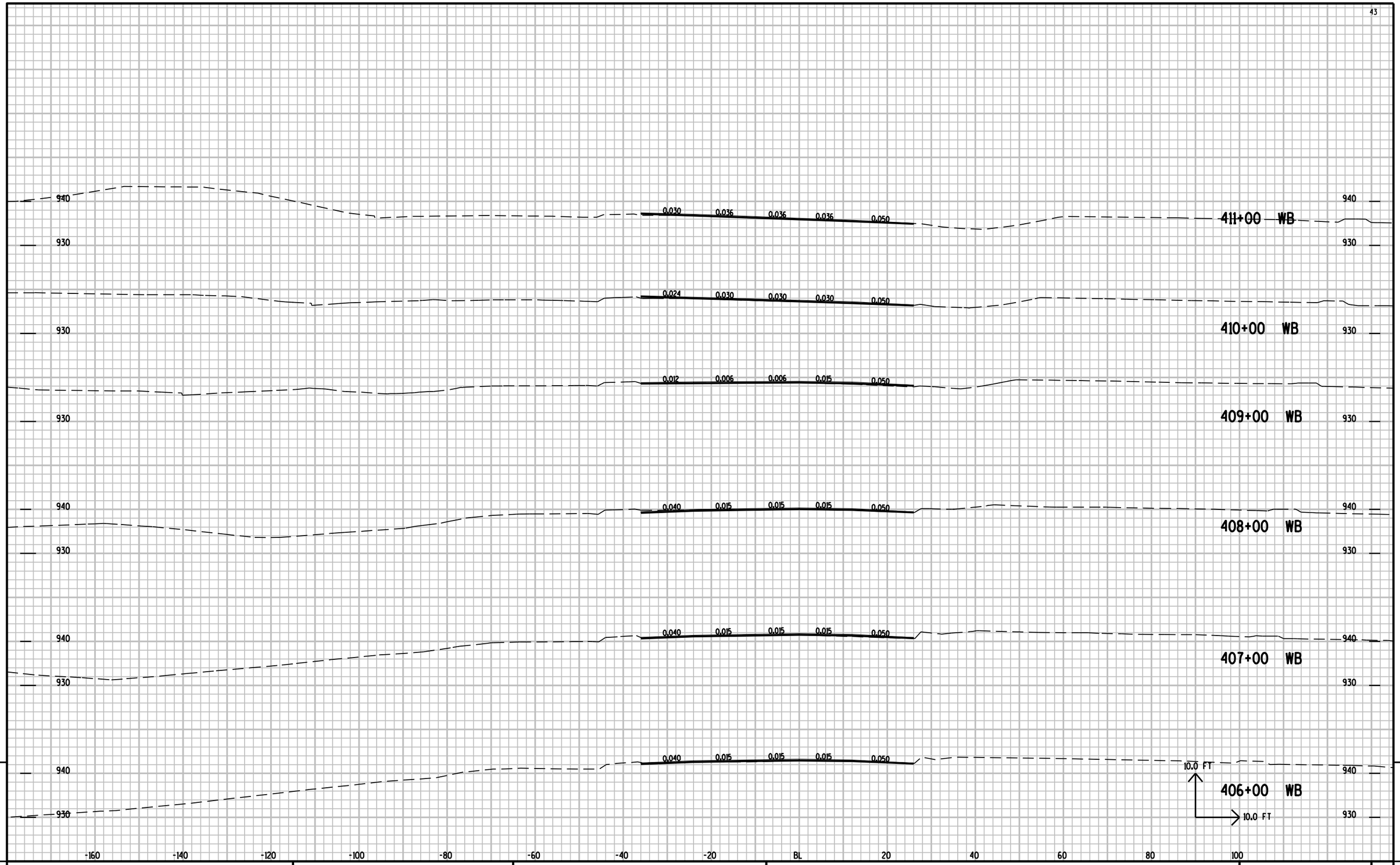

9

PROJECT NO: 1010-00-72	HWY: IH 39	COUNTY: DANE	CROSS SECTIONS: WB LANES	SHEET NO:	E

FILE NAME : r:\Support\CADDS\Projects\d1_10100072\090202_XS.DGN PLOT DATE : 25-APR-2012 10:23 PLOT BY : DOTJ3J PLOT NAME : PLOT SCALE : 2.000000:1.000000

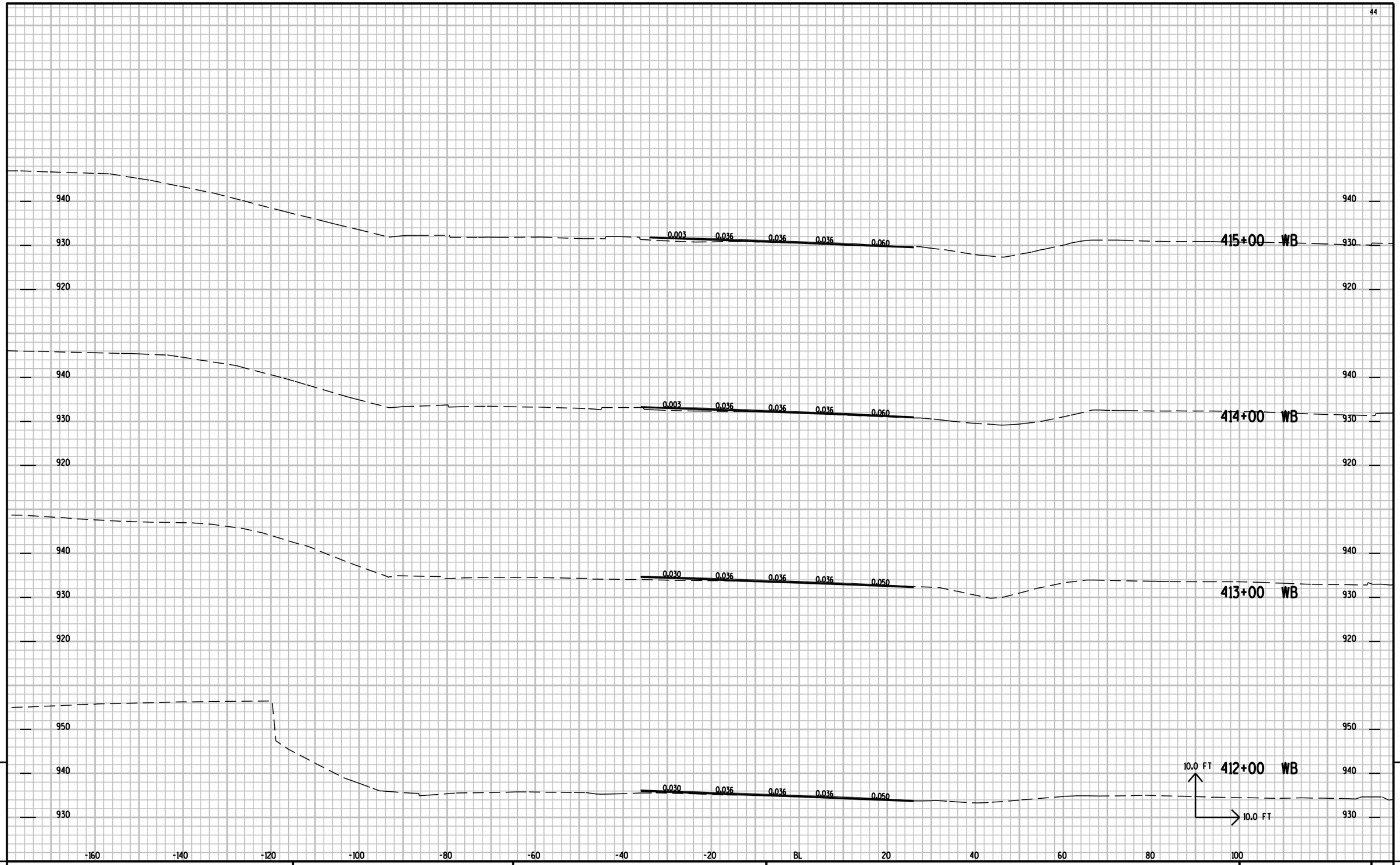

9

9

PROJECT NO: 1010-00-72	HWY: IH 39	COUNTY: DANE	CROSS SECTIONS: WB LANES	SHEET NO:	E

FILE NAME : r:\Support\CADDS\Projects\d1_10100072\090202_XS.DGN PLOT DATE : 25-APR-2012 10:23 PLOT BY : DOTJ3J PLOT NAME : PLOT SCALE : 2.000000:1.000000

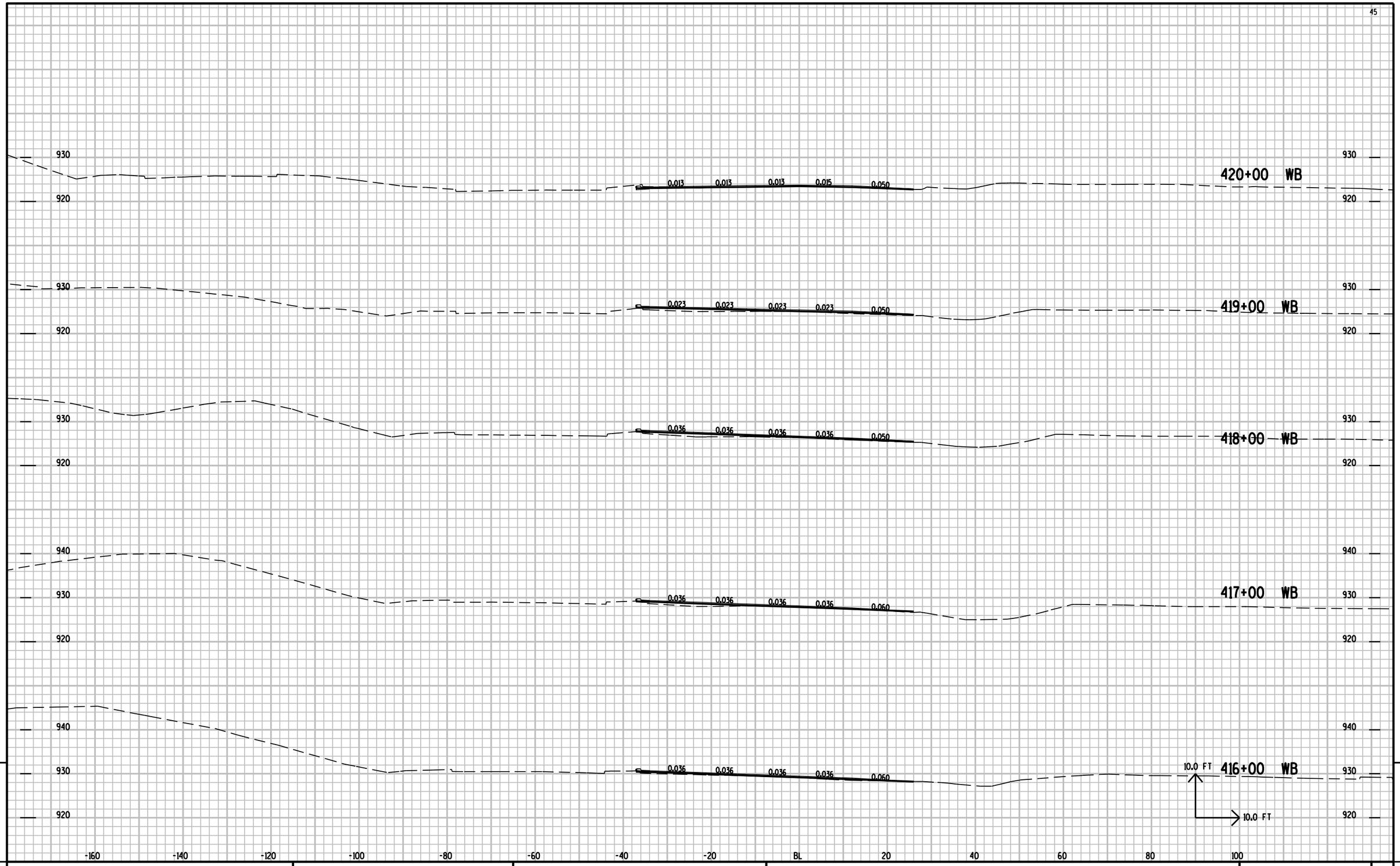

9

9

PROJECT NO: 1010-00-72	HWY: IH 39	COUNTY: DANE	CROSS SECTIONS: WB LANES	SHEET NO:	E

FILE NAME : r:\Support\CADDS\Projects\d1_10100072\090202_XS.DGN PLOT DATE : 25-APR-2012 10:23 PLOT BY : DOTJ3J PLOT NAME : PLOT SCALE : 2.000000:1.000000

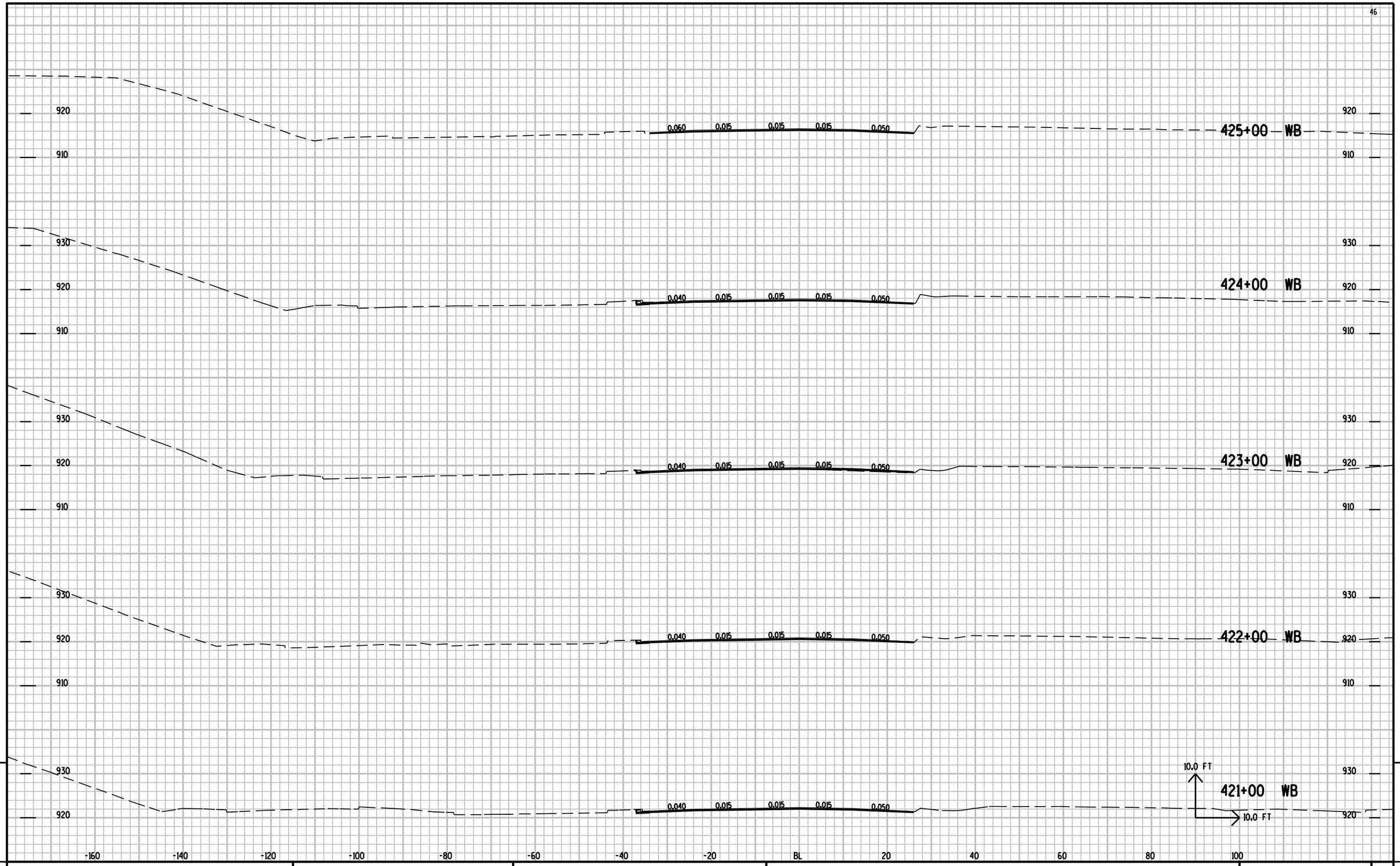

9 9

PROJECT NO: 1010-00-72	HWY: IH 39	COUNTY: DANE	CROSS SECTIONS: WB LANES	SHEET NO:	E

FILE NAME : r:\Support\CADDS\Projects\d1_10100072\090202_XS.DGN PLOT DATE : 25-APR-2012 10:23 PLOT BY : DOTJ3J PLOT NAME : PLOT SCALE : 2.000000:1.000000

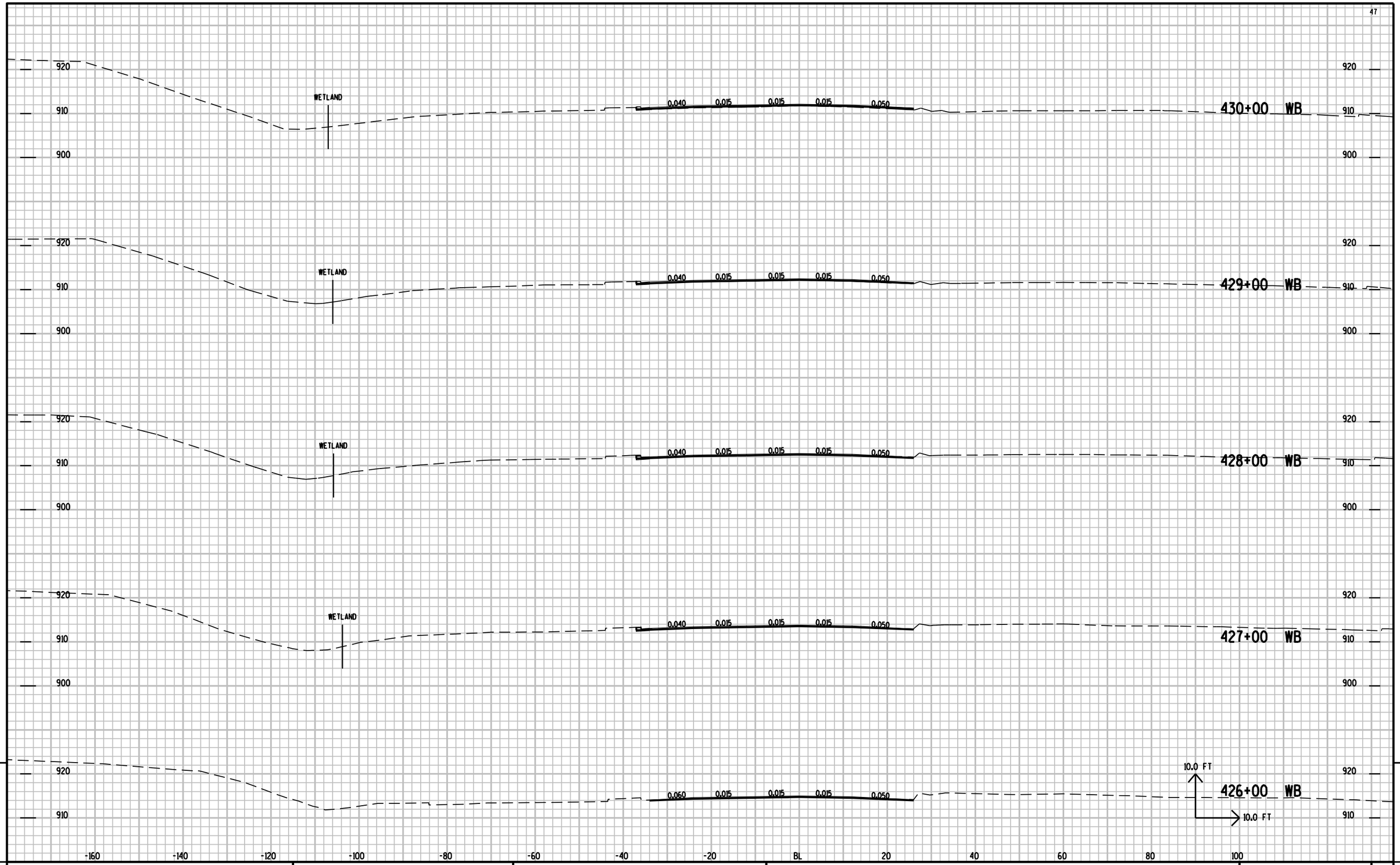

9

9

PROJECT NO: 1010-00-72	HWY: IH 39	COUNTY: DANE	CROSS SECTIONS: WB LANES	SHEET NO:	E

FILE NAME : r:\Support\CADDS\Projects\d1_10100072\090202_XS.DGN PLOT DATE : 25-APR-2012 10:24 PLOT BY : DOTJ3J PLOT NAME : PLOT SCALE : 2.000000:1.000000

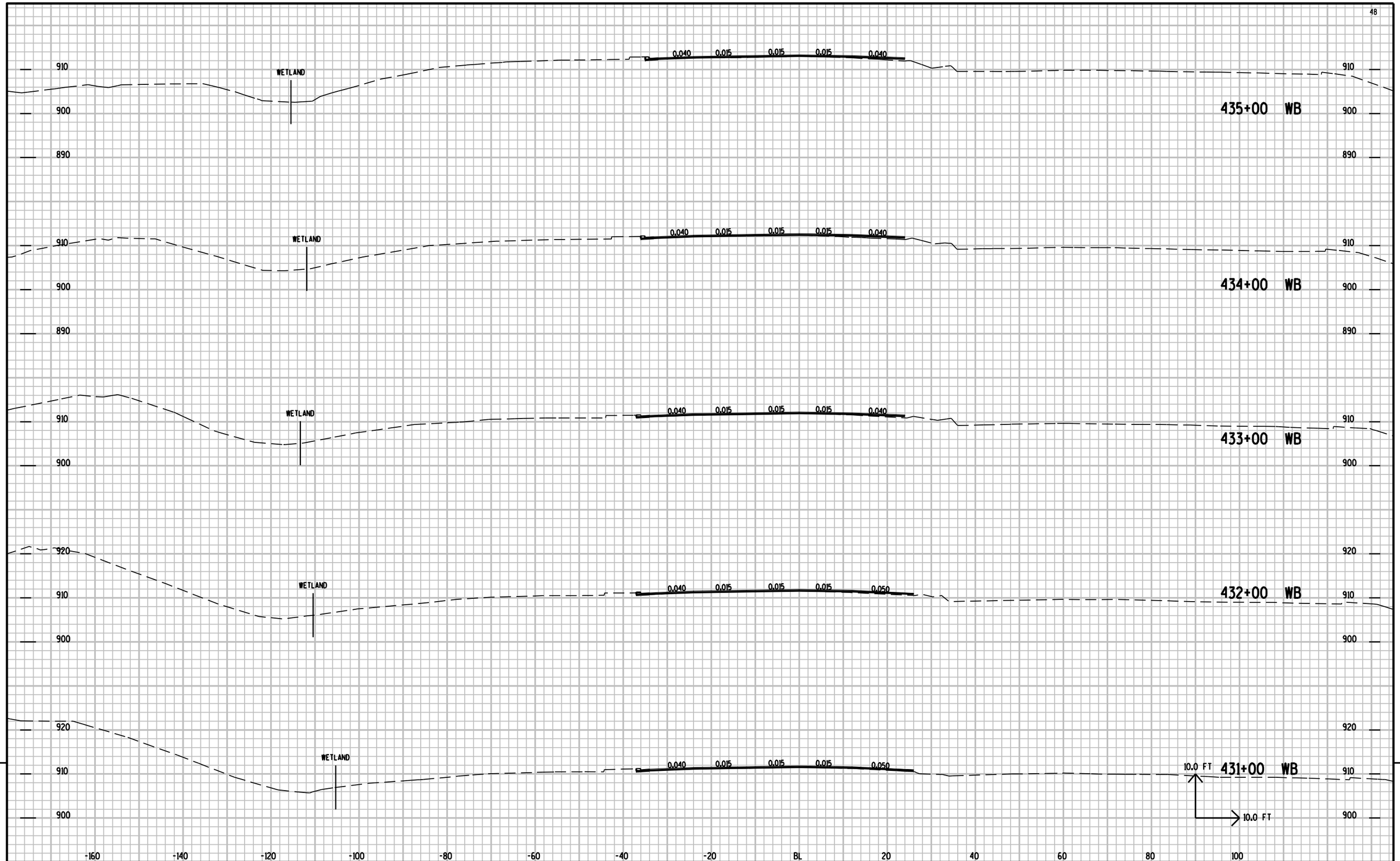

9

9

PROJECT NO: 1010-00-72	HWY: IH 39	COUNTY: DANE	CROSS SECTIONS: WB LANES	SHEET NO:	E

FILE NAME : r:\Support\CADDS\Projects\d1_10100072\090202_XS.DGN PLOT DATE : 25-APR-2012 10:24 PLOT BY : DOTJ3J PLOT NAME : PLOT SCALE : 2.000000:1.000000

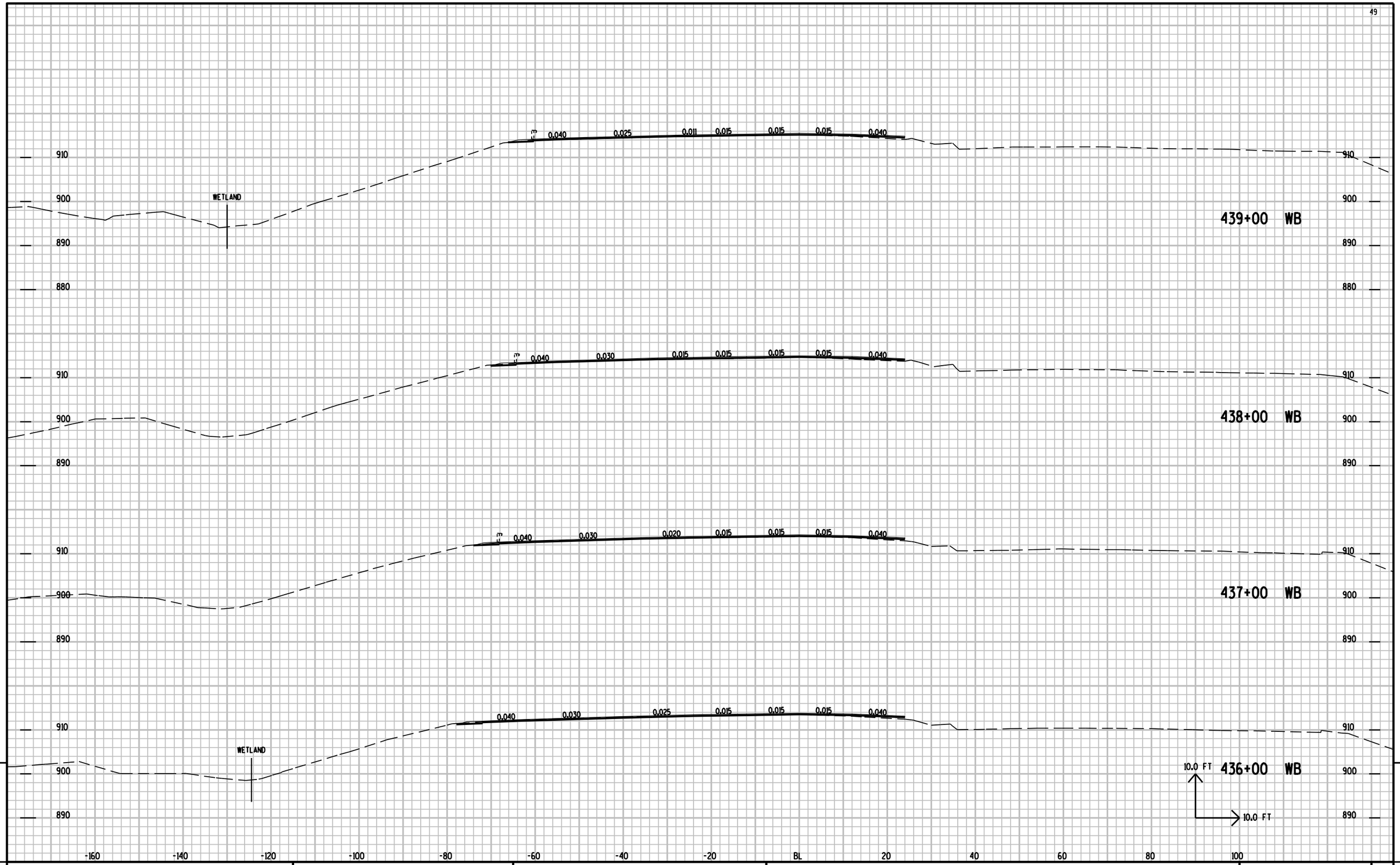

9

9

PROJECT NO: 1010-00-72	HWY: IH 39	COUNTY: DANE	CROSS SECTIONS: WB LANES	SHEET NO:	E

FILE NAME : r:\Support\CADDS\Projects\d1_10100072\090202_XS.DGN PLOT DATE : 25-APR-2012 10:24 PLOT BY : DOTJ3J PLOT NAME : PLOT SCALE : 2.000000:1.000000

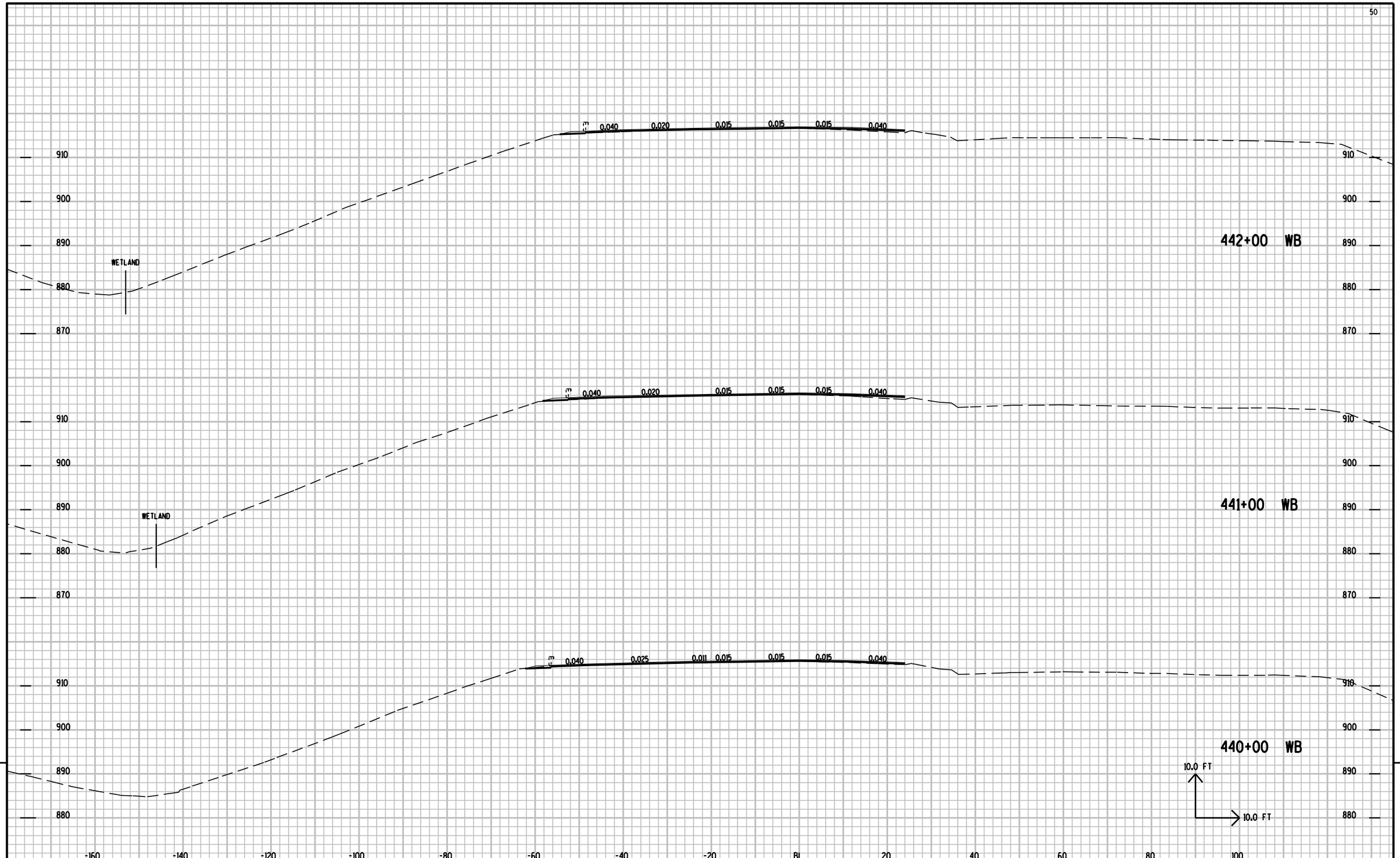

PROJECT NO: 1010-00-72	HWY: IH 39	COUNTY: DANE	CROSS SECTIONS: WB LANES	SHEET NO:	E

FILE NAME : r:\Support\CADDS\Projects\d1_10100072\090202_XS.DGN PLOT DATE : 25-APR-2012 10:24 PLOT BY : DOTJ3J PLOT NAME : PLOT SCALE : 2.000000:1.000000

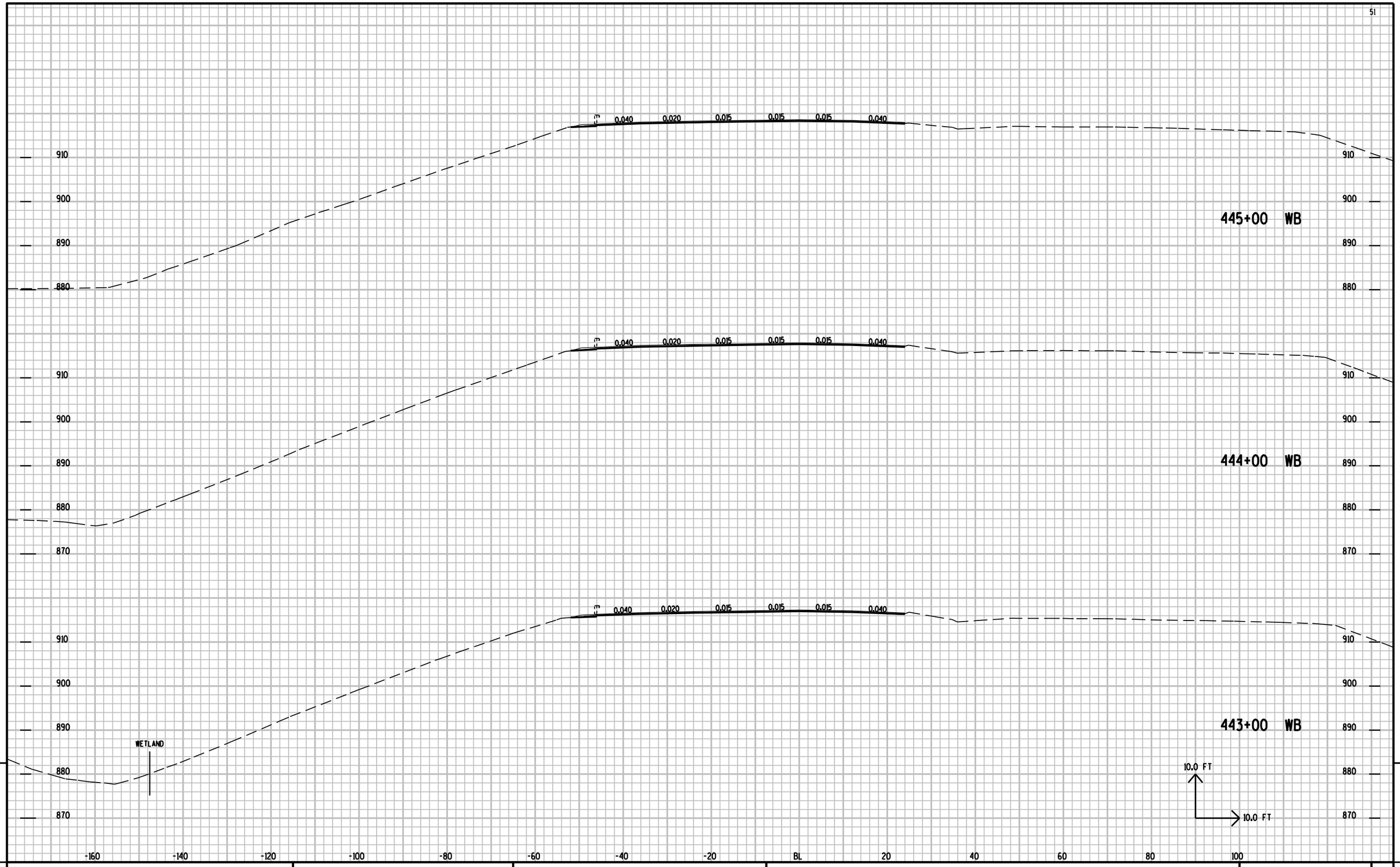

9

9

PROJECT NO: 1010-00-72	HWY: IH 39	COUNTY: DANE	CROSS SECTIONS: WB LANES	SHEET NO:	E

FILE NAME : r:\Support\CADDS\Projects\d1_10100072\090202_XS.DGN PLOT DATE : 25-APR-2012 10:24 PLOT BY : DOTJ3J PLOT NAME : PLOT SCALE : 2.000000:1.000000

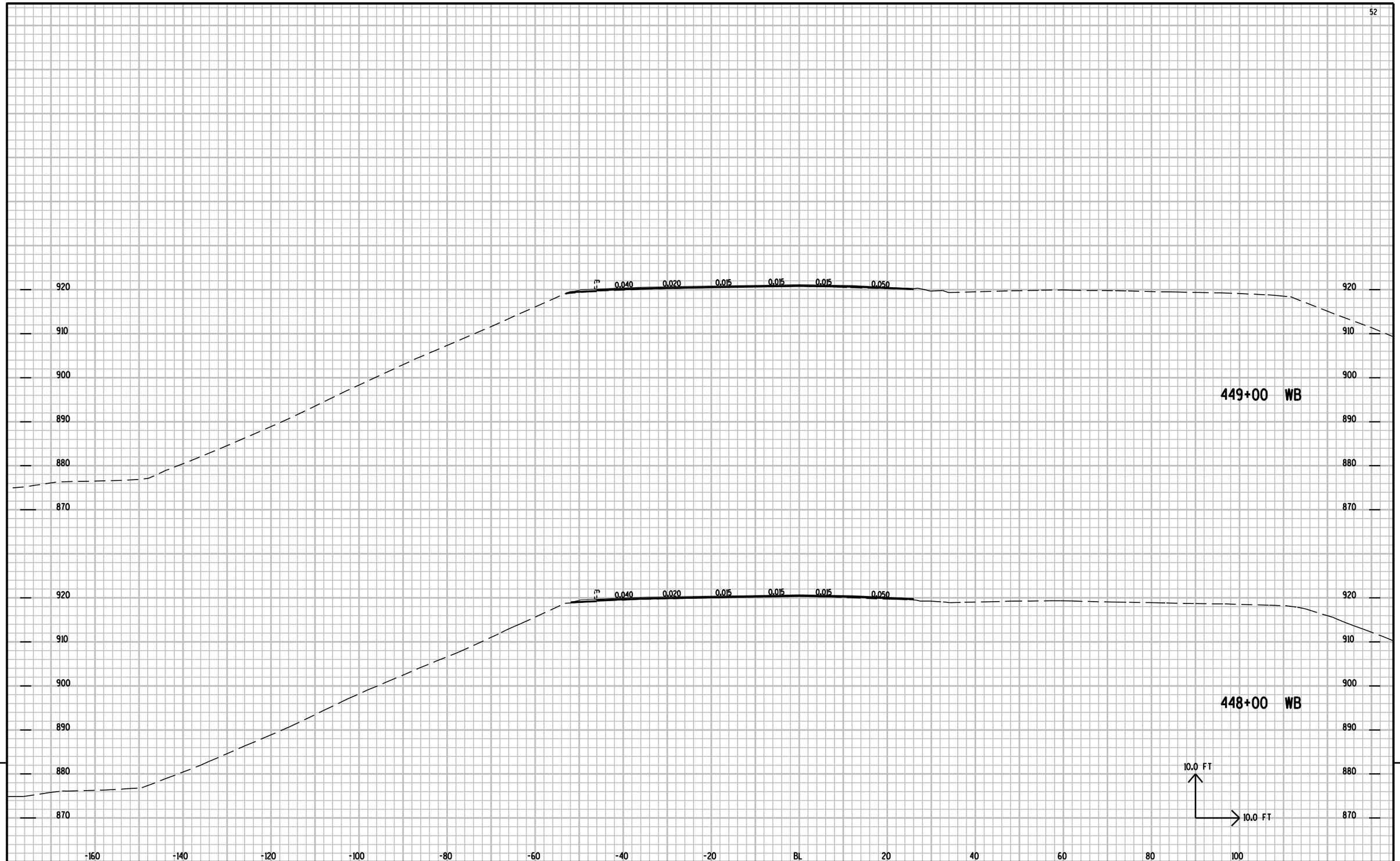

9

9

PROJECT NO: 1010-00-72	HWY: IH 39	COUNTY: DANE	CROSS SECTIONS: WB LANES	SHEET NO:	E

FILE NAME : r:\Support\CADDS\Projects\d1_10100072\090202_XS.DGN PLOT DATE : 25-APR-2012 10:24 PLOT BY : DOTJ3J PLOT NAME : PLOT SCALE : 2.000000:1.000000

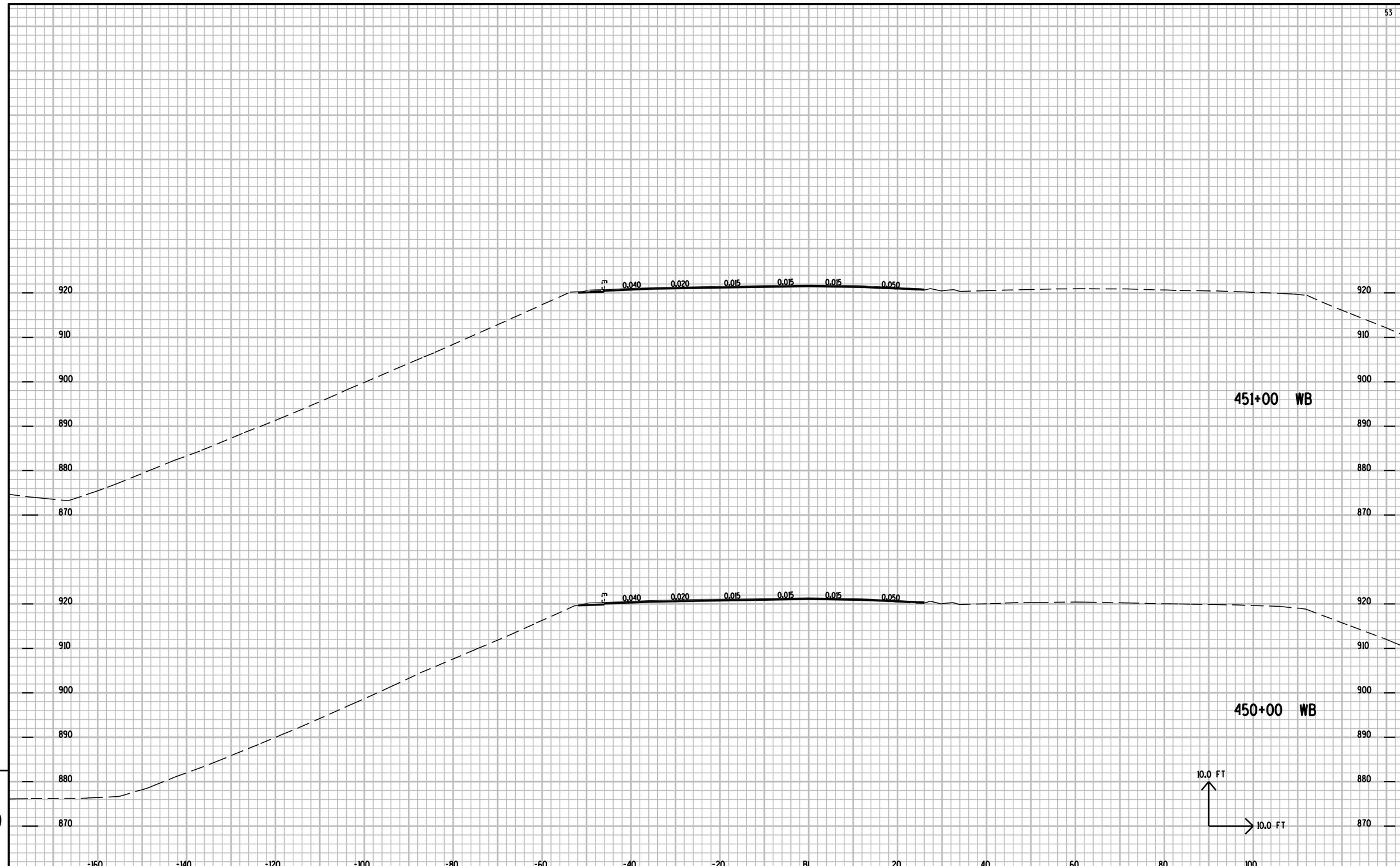

9

9

PROJECT NO: 1010-00-72	HWY: IH 39	COUNTY: DANE	CROSS SECTIONS: WB LANES	SHEET NO:	E

FILE NAME : r:\Support\CADDS\Projects\d1_10100072\090202_XS.DGN PLOT DATE : 25-APR-2012 10:25 PLOT BY : DOTJ3J PLOT NAME : PLOT SCALE : 2.000000:1.000000

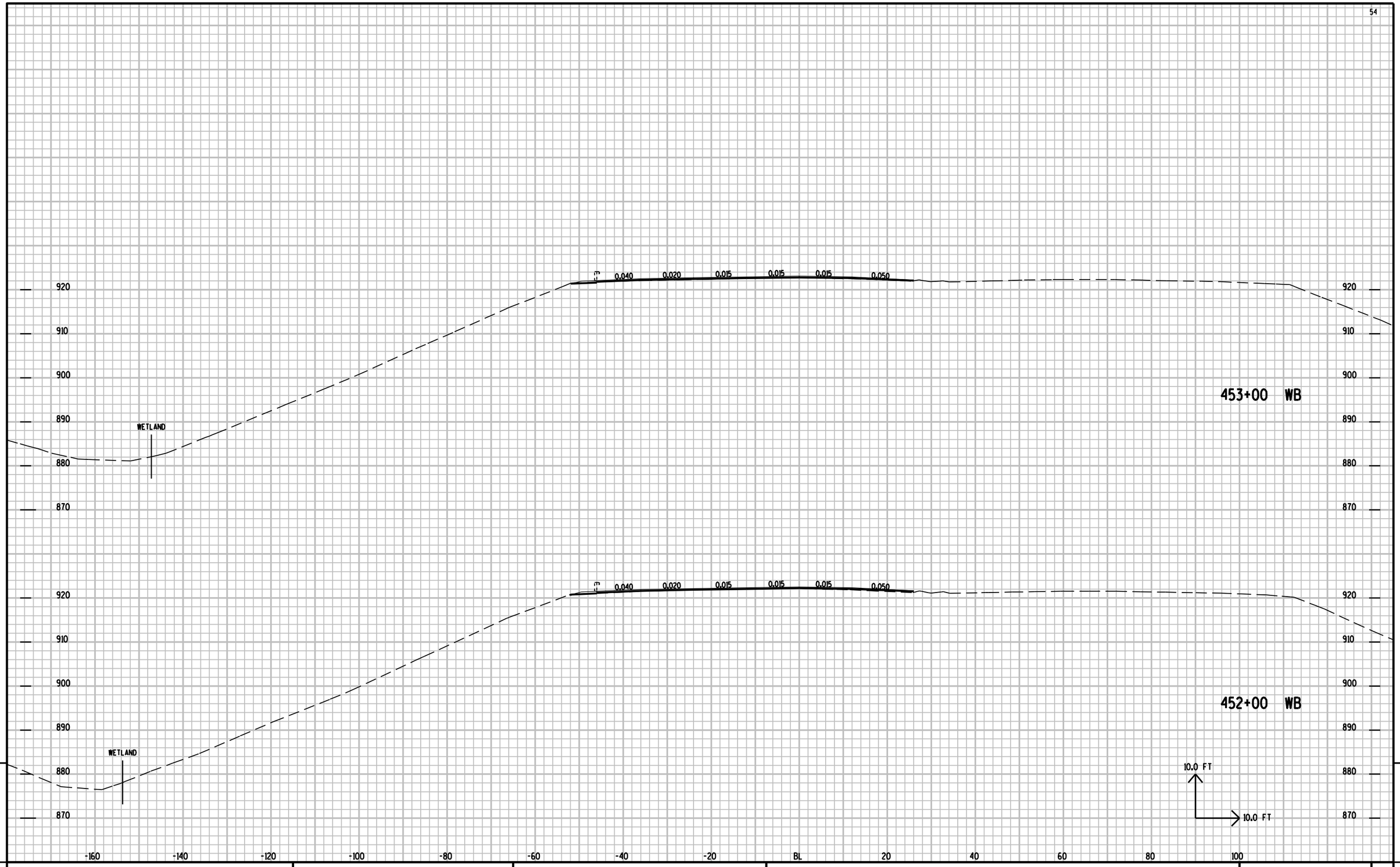

9

9

PROJECT NO: 1010-00-72	HWY: IH 39	COUNTY: DANE	CROSS SECTIONS: WB LANES	SHEET NO:	E

FILE NAME : r:\Support\CADDS\Projects\d1_10100072\090202_XS.DGN PLOT DATE : 25-APR-2012 10:25 PLOT BY : DOTJ3J PLOT NAME : PLOT SCALE : 2.000000:1.000000

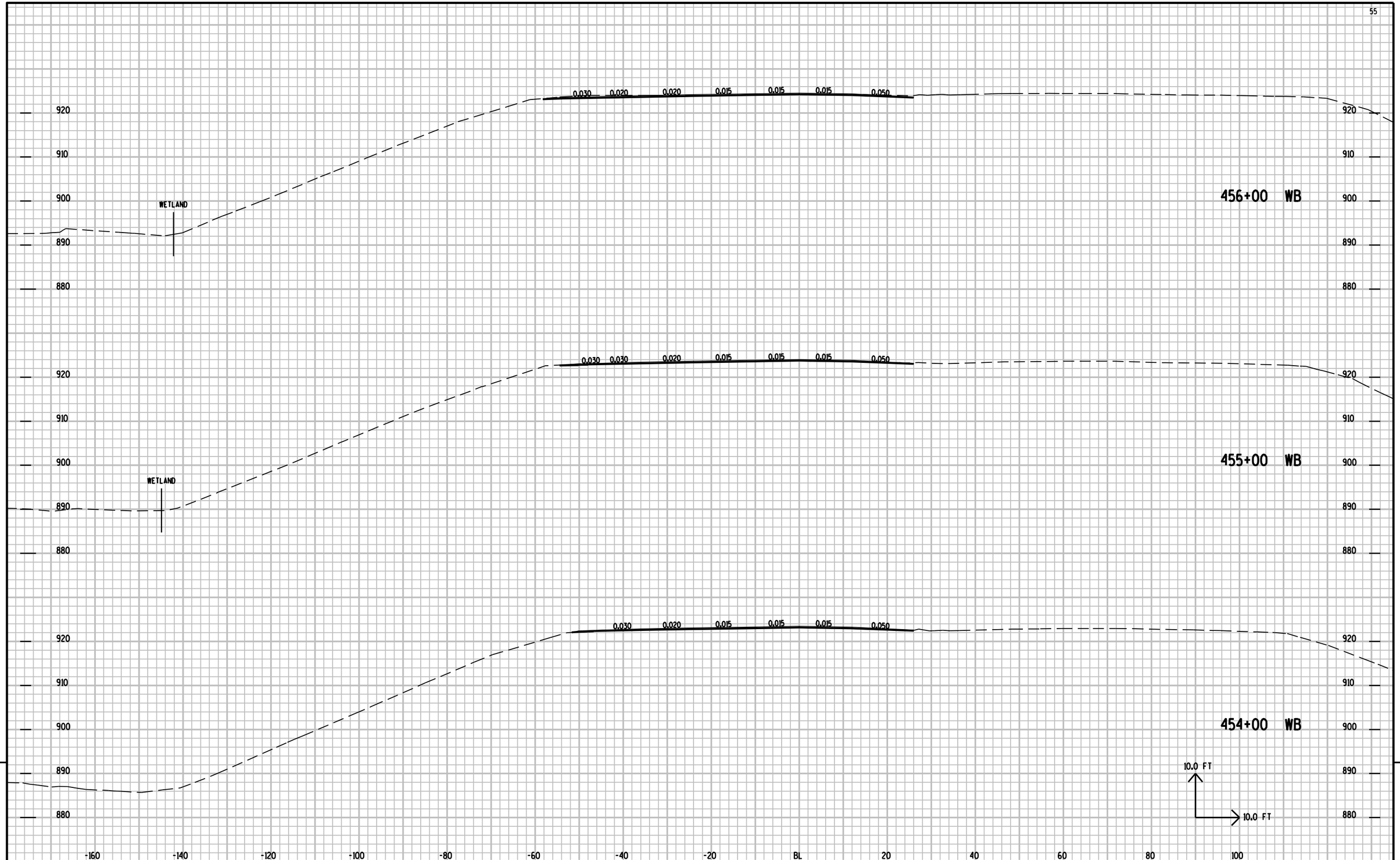

9

9

PROJECT NO: 1010-00-72	HWY: IH 39	COUNTY: DANE	CROSS SECTIONS: WB LANES	SHEET NO:	E

FILE NAME : r:\Support\CADDS\Projects\d1_10100072\090202_XS.DGN PLOT DATE : 25-APR-2012 10:25 PLOT BY : DOTJ3J PLOT NAME : PLOT SCALE : 2.000000:1.000000

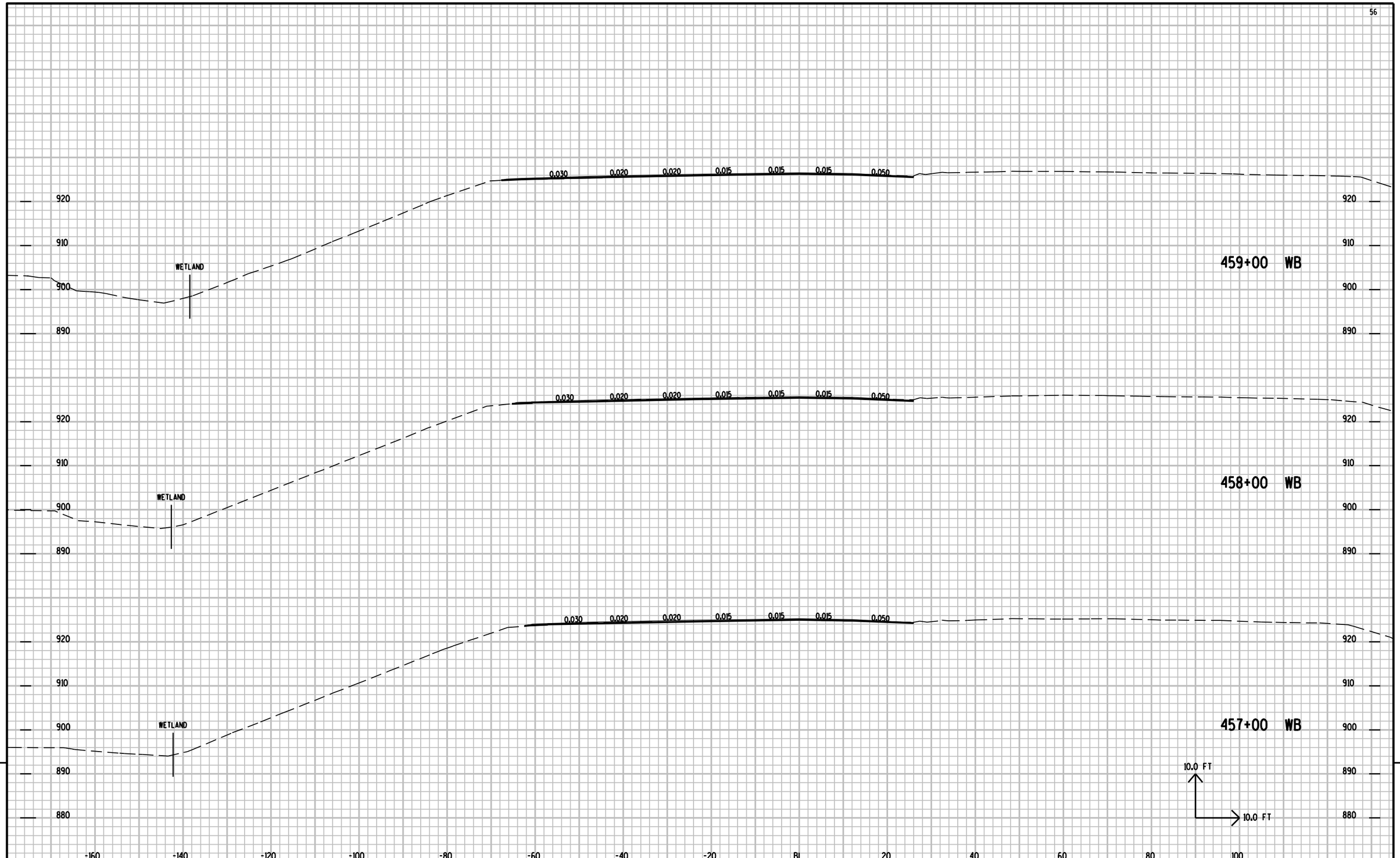

9

9

PROJECT NO: 1010-00-72	HWY: IH 39	COUNTY: DANE	CROSS SECTIONS: WB LANES	SHEET NO:	E

FILE NAME : r:\Support\CADDS\Projects\d1_10100072\090202_XS.DGN PLOT DATE : 25-APR-2012 10:25 PLOT BY : DOTJ3J PLOT NAME : PLOT SCALE : 2.000000:1.000000

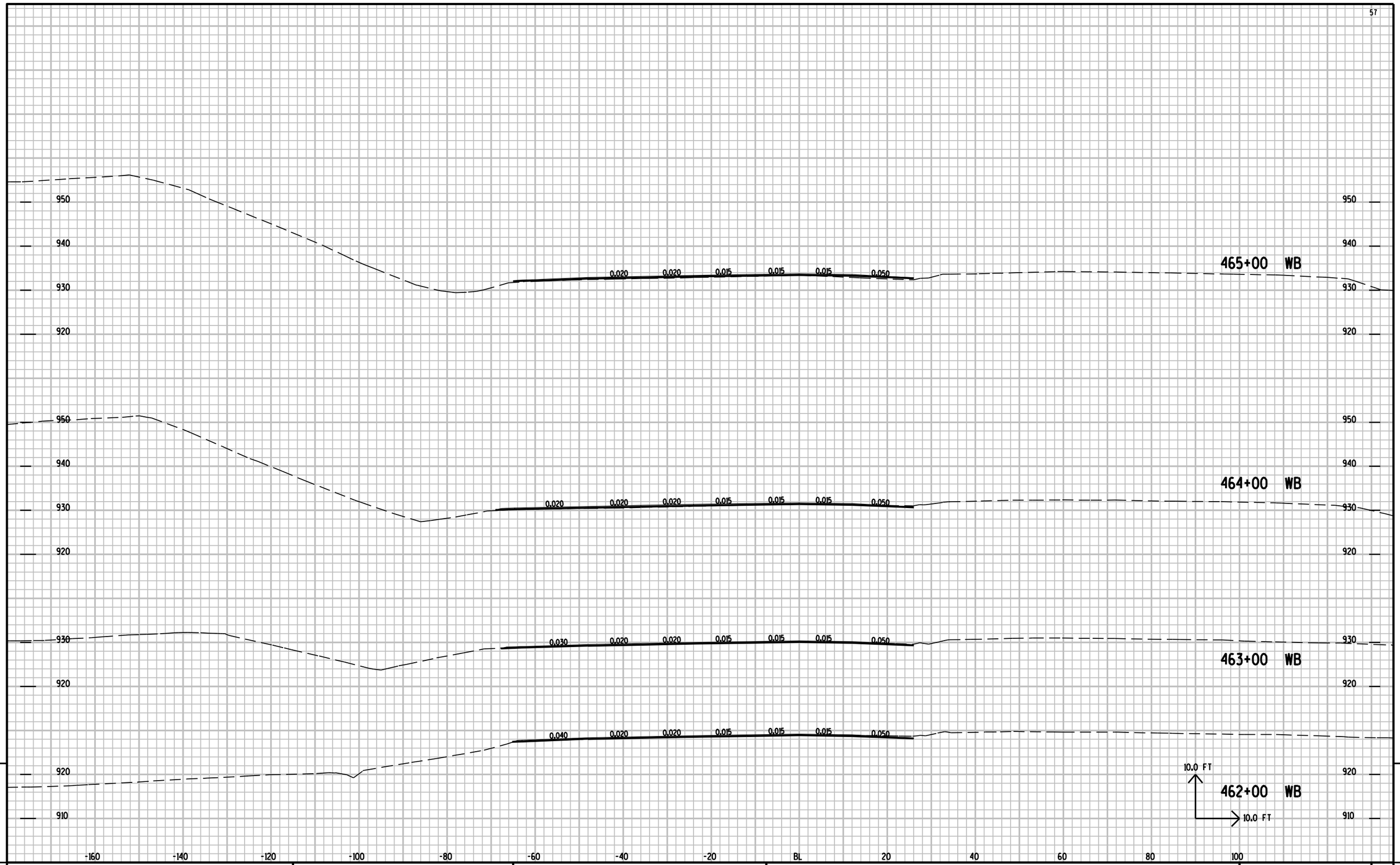

9

9

PROJECT NO: 1010-00-72	HWY: IH 39	COUNTY: DANE	CROSS SECTIONS: WB LANES	SHEET NO:	E

FILE NAME : r:\Support\CADDS\Projects\d1_10100072\090202_XS.DGN PLOT DATE : 25-APR-2012 10:25 PLOT BY : DOTJ3J PLOT NAME : PLOT SCALE : 2.000000:1.000000

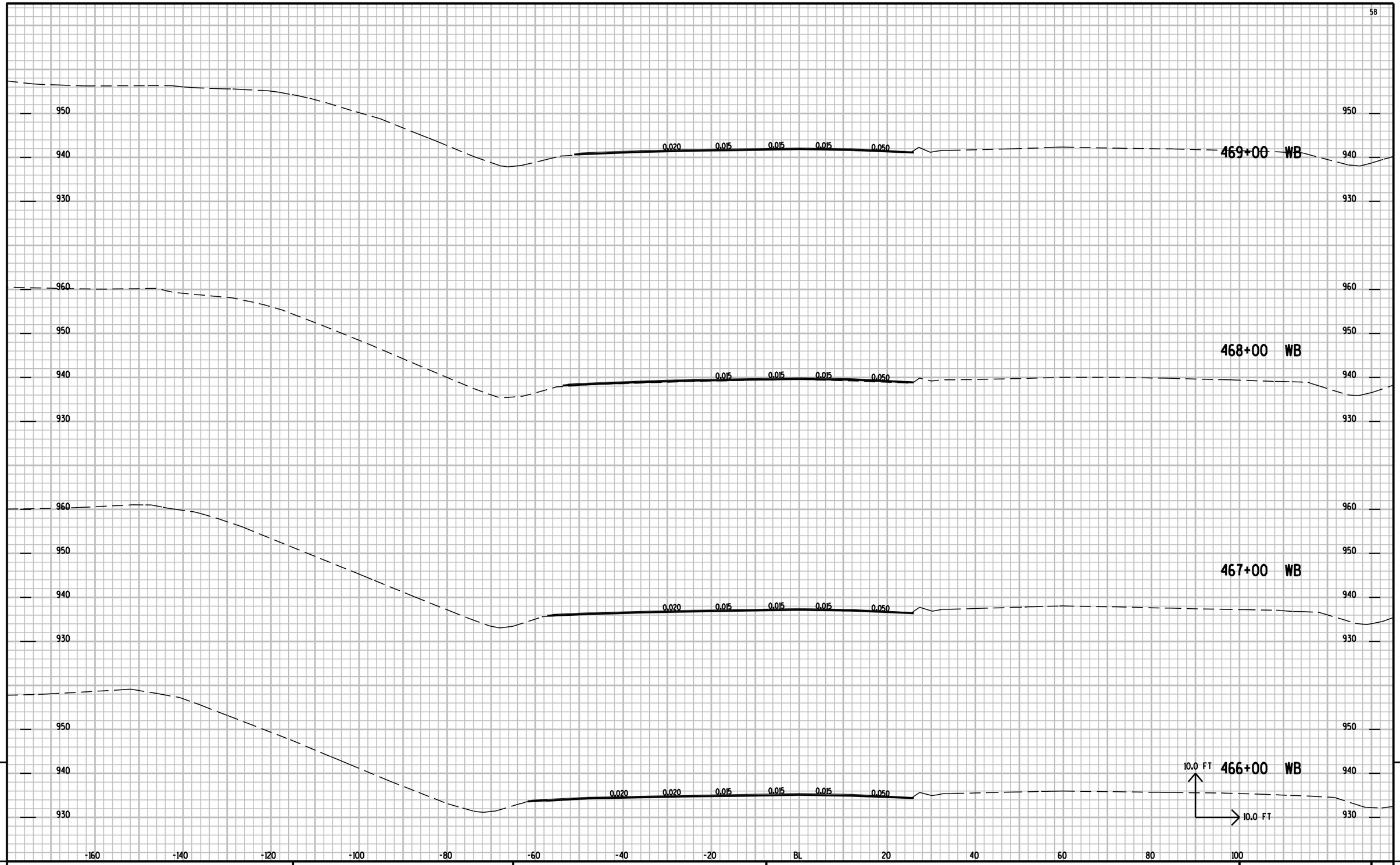

9

9

PROJECT NO: 1010-00-72	HWY: IH 39	COUNTY: DANE	CROSS SECTIONS: WB LANES	SHEET NO:	E

FILE NAME : r:\Support\CADDS\Projects\d1_10100072\090202_XS.DGN PLOT DATE : 25-APR-2012 10:25 PLOT BY : DOTJ3J PLOT NAME : PLOT SCALE : 2.000000:1.000000

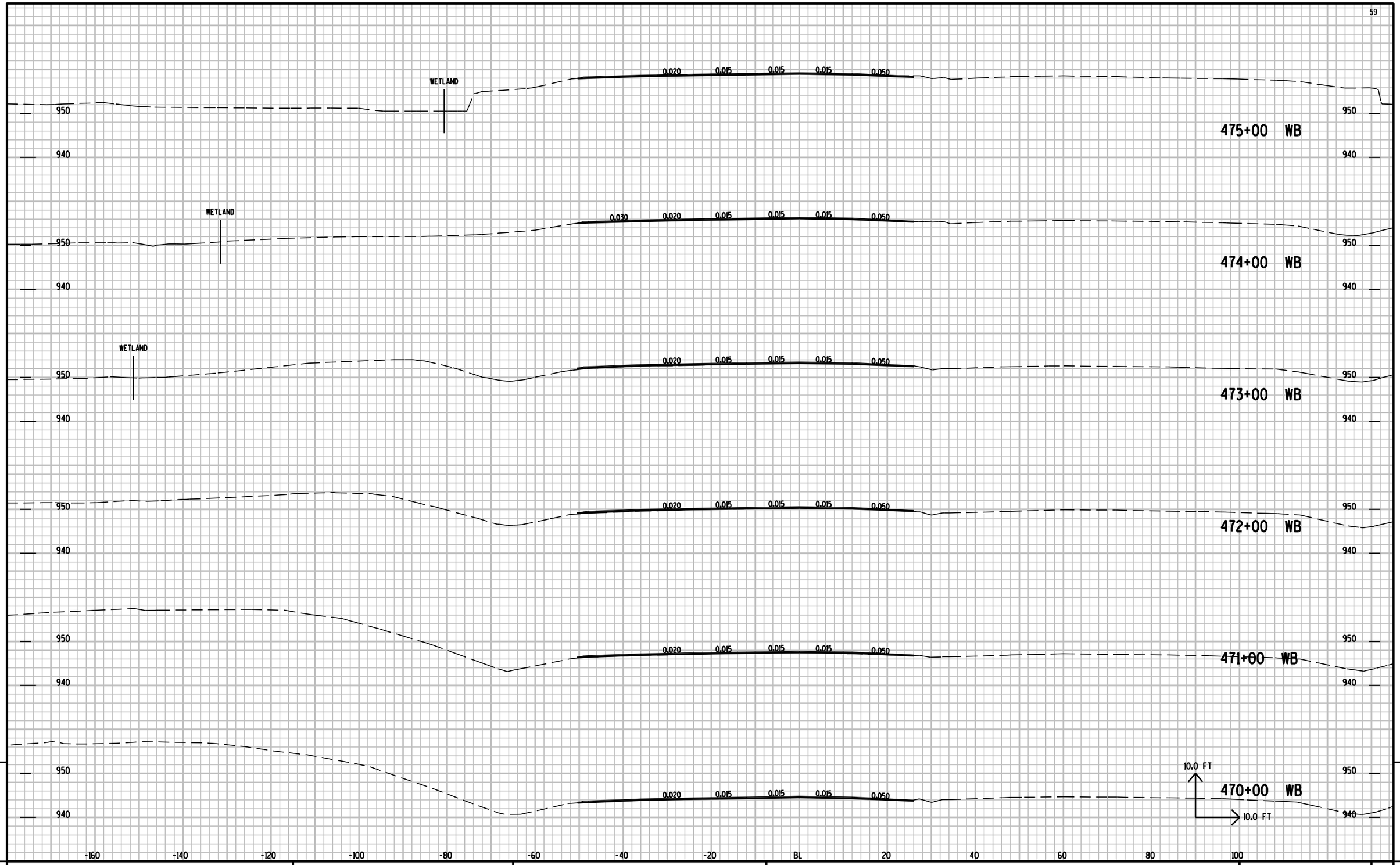

9 9

PROJECT NO: 1010-00-72	HWY: IH 39	COUNTY: DANE	CROSS SECTIONS: WB LANES	SHEET NO:	E

FILE NAME : r:\Support\CADDS\Projects\d1_10100072\090202_XS.DGN PLOT DATE : 25-APR-2012 10:26 PLOT BY : DOTJ3J PLOT NAME : PLOT SCALE : 2.000000:1.000000

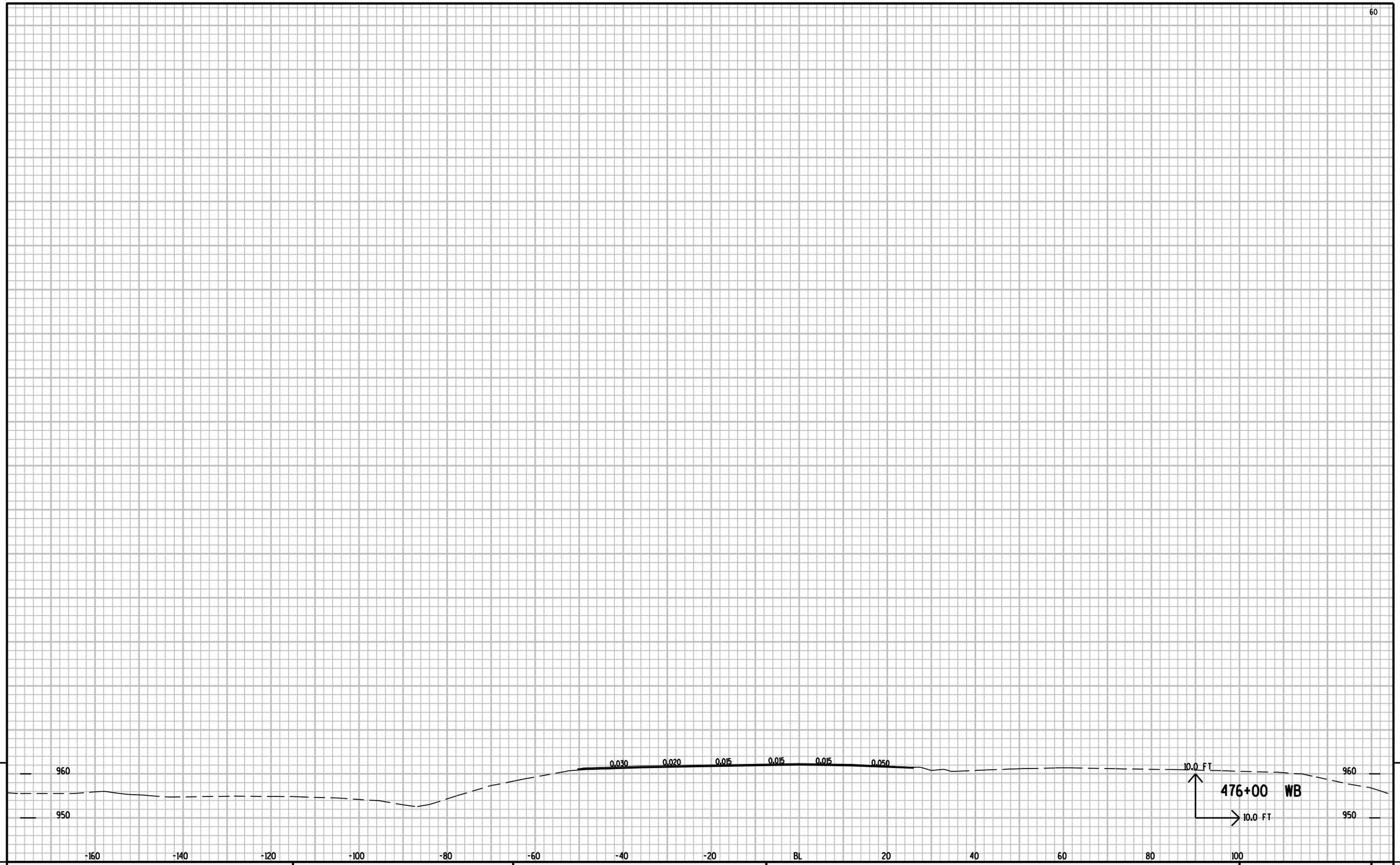

9

9

PROJECT NO: 1010-00-72	HWY: IH 39	COUNTY: DANE	CROSS SECTIONS: WB LANES	SHEET NO:	E

FILE NAME : r:\Support\CADDS\Projects\d1_10100072\090202_XS.DGN PLOT DATE : 25-APR-2012 10:26 PLOT BY : DOTJ3J PLOT NAME : PLOT SCALE : 2.000000:1.000000

Wisconsin Department of Transportation

Dedicated people creating transportation solutions through innovation and exceptional service.

http://www.dot.wisconsin.gov

3

PAVEMENT MARKING ITEMS

GROUP CODE	STATION	LOCATION	646.0106 PAVEMENT MARKING EPOXY 4-INCH LF (White)	646.0106 PAVEMENT MARKING EPOXY 4-INCH LF (Yellow)	646.0873.S PAVEMENT MARKING WET REFLECTIVE TAPE 8-INCH LF (White, Edge Line)	646.0873.S PAVEMENT MARKING WET REFLECTIVE TAPE 8-INCH LF (White, Dashed Line*)	646.0881.S PAVEMENT MARKING GROOVED WET REFLECTIVE TAPE 4-INCH LF (White, Lane Line)	646.0881.S PAVEMENT MARKING GROOVED WET REFLECTIVE TAPE 4-INCH LF (White, Dashed Line*)	647.0746 PAVEMENT MARKING DIAGONAL EPOXY 24-INCH LF	649.0200 TEMPORARY PAVEMENT MARKING REFLECTIVE PAINT 4-INCH LF
010	STA 200+00 EB TO STA 477+85 EB	EB (STAGE 2B-2E)	--	--	--	--	--	--	--	73,450
	STA 200+00 WB TO STA 477+85 WB	WB (STAGE 2B-2E)	--	--	--	--	--	--	--	72,550
	STA 200+00 EB TO STA 477+85 EB	EB (STAGE 3B-3E)	25,850	26,350	6,220	288	--	--	405	15,050
	STA 200+00 WB TO STA 477+85 WB	WB (STAGE 3B-3E)	25,900	26,150	6,380	--	--	--	485	13,850
	STA 200+00 EB TO STA 477+85 EB	EB (STAGE 4)	--	--	--	--	14,850	235	--	--
	STA 200+00 WB TO STA 477+85 WB	WB (STAGE 4)	--	--	--	--	13,650	180	--	--
		SUB TOTAL	51,750	52,500	12,600	288	28,500	415		
		TOTAL	104,250		12,888		28,915		890	174,900

* 3' LINE, 9' GAP

STAKING ITEMS

GROUP CODE	STATION	LOCATION	650.4500 CONSTRUCTION STAKING SUBGRADE LF	650.5000 CONSTRUCTION STAKING BASE LF	650.8000 CONSTRUCTION STAKING RESURFACING REFERENCE LF	650.9910 CONSTRUCTION STAKING SUPPLEMENTAL CONTROL LS	650.9920 CONSTRUCTION STAKING SLOPE STAKES LF
010	STA 200+00 EB to STA 477+85 EB	EB & WB	--	--	55,500	1	44,170
	STA 209+51 EB TO STA 215+21 EB	RAMP	570	570	--	--	--
	STA 241+66 WB TO STA 247+36 WB	RAMP	570	570	--	--	--
	TOTAL		1,140	1,140	55,500	1	44,170

SAWING ITEMS

GROUP CODE	STATION	LOCATION	690.0150 SAWING ASPHALT LF	690.0250 SAWING CONCRETE LF	SPV.0090.03 SAWING CONCRETE PARTIAL SAWCUT LF	REMARKS
010	STA 209+51 EB TO STA 215+21 EB	RAMP	5	637	--	
	STA 241+66 WB TO STA 247+36 WB	RAMP	5	606	--	
	STA 381+15 EB TO STA 385+00 EB	RT	--	385	--	
	STA 412+88 EB TO STA 416+07 EB	RT	--	319	--	
	STA 378+50 WB TO STA 391+98 WB	LT	--	1,348	--	
	STA 415+00 WB TO STA 424+76 WB	LT	--	976	--	
	STA 426+00 WB TO STA 435+09 WB	LT	--	909	--	
	STA 200+00 EB TO STA 477+85 EB	EB & WB	--	400	--	BASE PATCHING CONCRETE
	STA 200+00 EB TO STA 477+85 EB	EB & WB	--	3,120	1,270	CONTINUOUSLY REINFORCED PAVEMENT REPAIR
	STA 378+50 EB TO STA 435+00 EB	EB & WB	--	210	--	CONCRETE MEDIAN SLOPED NOSE REMOVALS
	TOTAL		10	8,910	1,270	

Addendum No. 2
ID 1010-00-72
Revised Sheet 118
November 1, 2012

mad

November 2012

PROJECT ID: 1010-00-72
WITH:

COUNTY: DANE

ORDER OF SHEETS

Section No.	1	Title
Section No.	2	Typical Sections and Details
Section No.	3	Estimate of Quantities
Section No.	3	Miscellaneous Quantities
Section No.	4	Right of Way Plat
Section No.	5	Plan and Profile
Section No.	6	Standard Detail Drawings
Section No.	7	Sign Plates
Section No.	8	Structure Plans
Section No.	9	Computer Earthwork Data
Section No.	9	Cross Sections

TOTAL SHEETS = 318

STATE OF WISCONSIN
DEPARTMENT OF TRANSPORTATION

PLAN OF PROPOSED IMPROVEMENT

MADISON - LAKE DELTON ROAD

(LIEN ROAD - USH 51)

IH 39

DANE COUNTY

STATE PROJECT	FEDERAL PROJECT	
	PROJECT	CONTRACT
1010-00-72	wisc 2012600	

STATE PROJECT NUMBER
1010-00-72

Addendum No.1
ID 1010-00-72
Revised Sheet 1
October 24, 2012

N

02

DESIGN DESIGNATION

A.A.D.T. (2013)	=	90,820
A.A.D.T. (2023)	=	103,340
D.H.V.	=	9,200
D.D.	=	50-50
T.	=	24%
DESIGN SPEED	=	65 MPH
ESALS	=	20,016,600

CONVENTIONAL SYMBOLS

PLAN
- CORPORATE LIMITS
- PROPERTY LINE
- LOT LINE
- LIMITED HIGHWAY EASEMENT
- EXISTING RIGHT OF WAY
- PROPOSED OR NEW R/W LINE
- SLOPE INTERCEPT
- REFERENCE LINE
- EXISTING CULVERT
- PROPOSED CULVERT (Box or Pipe)
- COMBUSTIBLE FLUIDS (CAUTION)
- MARSH AREA
- WOODED OR SHRUB AREA

PROFILE
- GRADE LINE
- ORIGINAL GROUND
- MARSH OR ROCK PROFILE (To be noted as such) (ROCK)
- SPECIAL DITCH (LABEL)
- GRADE ELEVATION (95.36)
- CULVERT (Profile View)

UTILITIES
- ELECTRIC — E —
- FIBER OPTIC — FO —
- GAS — G —
- SANITARY SEWER — SAN —
- STORM SEWER — SS —
- TELEPHONE — T —
- WATER — W —
- UTILITY PEDESTAL
- POWER POLE
- TELEPHONE POLE

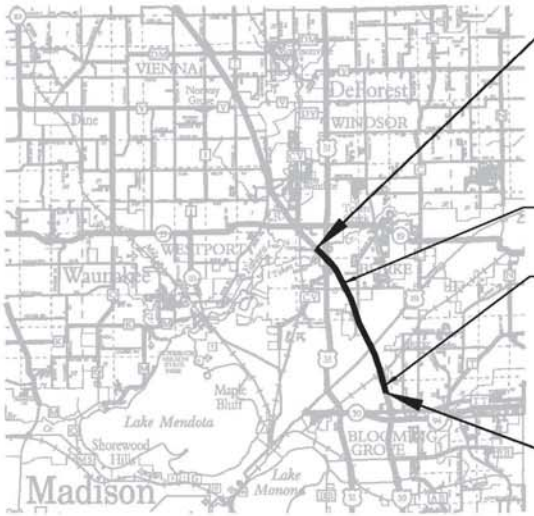

BEGIN PROJECT
STA. 200+00 EB
X = 835,084.65
Y = 522,858.15

STA. 258+98.31 EB BK.=
STA. 259+08.60 EB AH.

STA. 425+73.11 EB BK.=
STA. 425+80.0 EB AH.

END PROJECT
STA. 477+85 EB

LAYOUT
SCALE 0 2 MI.

TOTAL NET LENGTH OF CENTERLINE = 5.259 MI.

Alignment and cross-section ground surface data is based on as-built plans and is to be used as reference only. Field survey is limited to drainage structure locations only.

ORIGINAL PLANS PREPARED BY

PEOPLE WHO CARE
CREATING QUALITY TRANSPORTATION
TODAY AND TOMORROW

WISDOT SOUTHWEST REGION - MADISON OFFICE

STATE OF WISCONSIN
DEPARTMENT OF TRANSPORTATION

PREPARED BY

Surveyor	
Designer	ERIK NILSON/AMY COUGHLIN
Project Manager	JAN BENNETT
Regional Examiner	
Regional Supervisor	BRENDA SCHOENFELD
C.O. Examiner	JE

APPROVED FOR THE DEPARTMENT

DATE: _____ Brenda Schoenfeld (Signature)

E

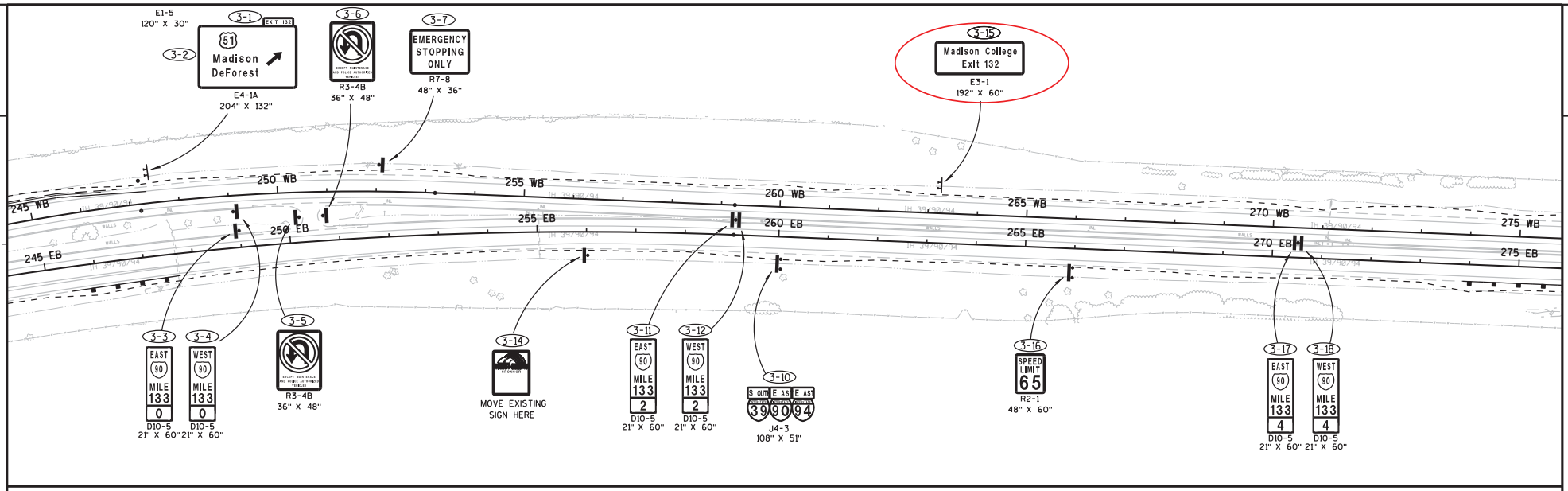

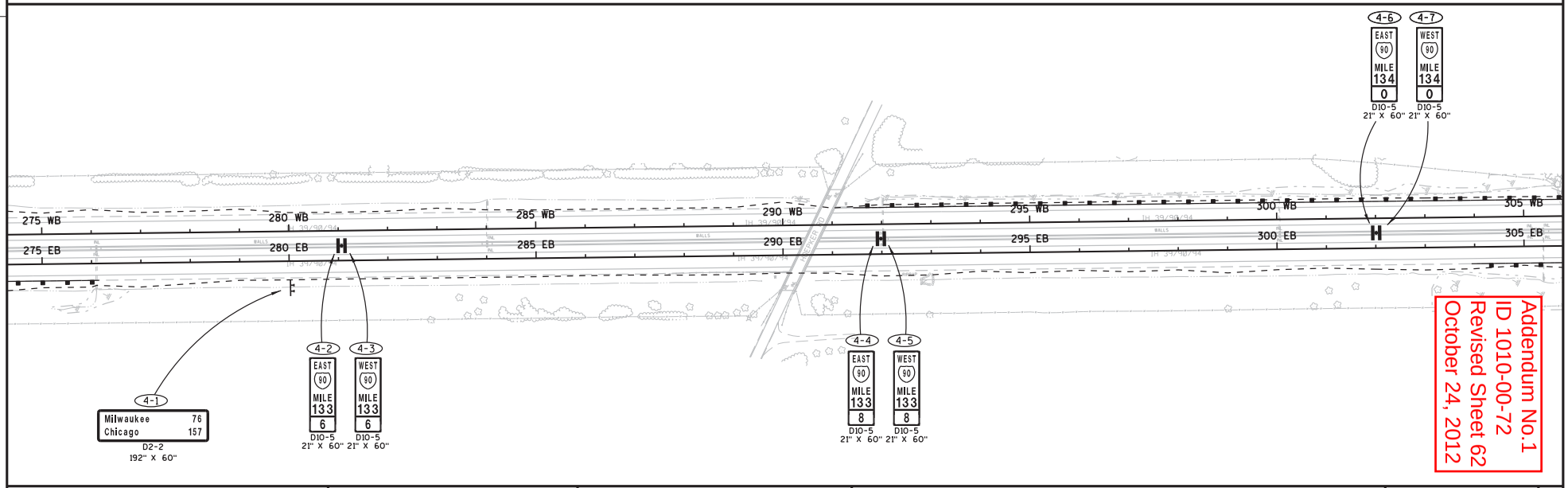

Addendum No.1
ID 1010-00-72
Revised Sheet 62
October 24, 2012

PROJECT NO:1010-00-72	HWY:IH 39	COUNTY:DANE	PERMANENT SIGNING	SHEET 62	E

2

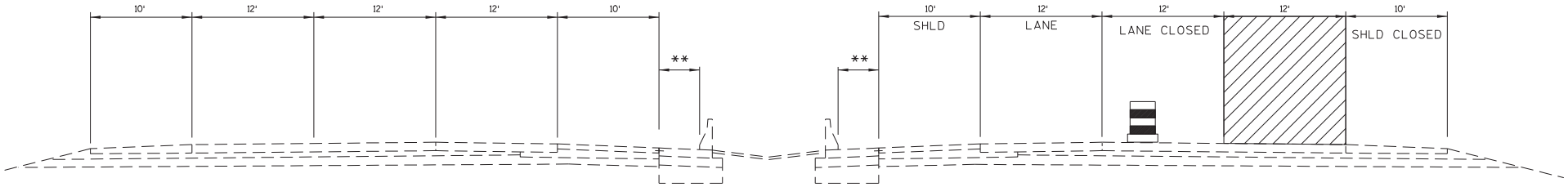

** 2' MIN. 4' NOR.

WORK ZONE

TRAFFIC CONTROL - NORTH OF USH 151 INTERCHANGE

STAGE 1B, 2E, 3E

Addendum No.1
ID 1010-00-72
Revised Sheet 73
October 24, 2012

2

PROJECT NO:1010-00-72	HWY:IH 39	COUNTY:DANE	CONSTRUCTION STAGING	SHEET 73	E

2

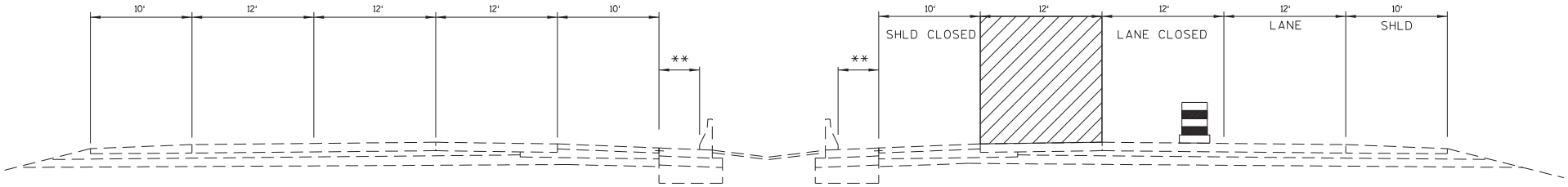

** 2' MIN. 4' NOR.

WORK ZONE

TRAFFIC CONTROL - NORTH OF USH 151 INTERCHANGE

STAGE 2B, 3B

Addendum No.1
ID 1010-00-72
Revised Sheet 75
October 24, 2012

2

PROJECT NO:1010-00-72	HWY:IH 39	COUNTY:DANE	CONSTRUCTION STAGING	SHEET 75	E

2

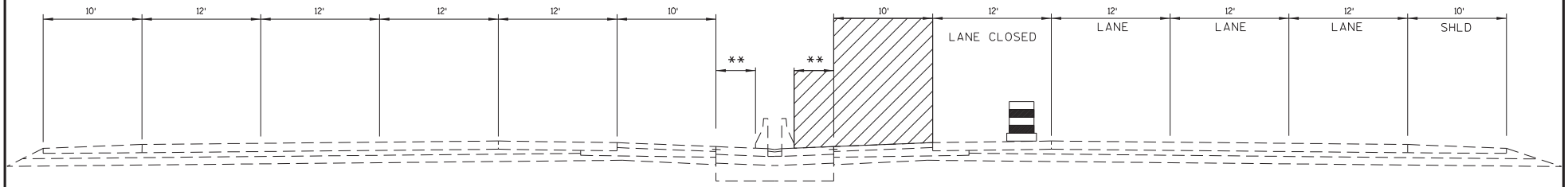

** 2' MIN. 4' NOR.

WORK ZONE

TRAFFIC CONTROL - SOUTH OF USH 151 INTERCHANGE

STAGE 2A, 3A

Addendum No.1
ID 1010-00-72
Revised Sheet 77
October 24, 2012

PROJECT NO:1010-00-72	HWY:IH 39	COUNTY:DANE	CONSTRUCTION STAGING	SHEET 77	E

2

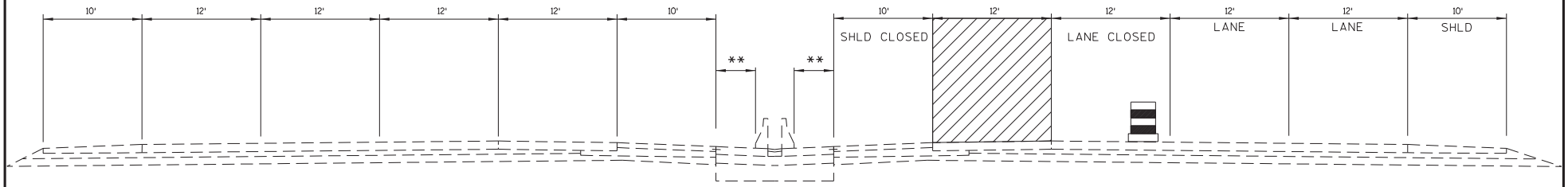

** 2' MIN. 4' NOR.

WORK ZONE

TRAFFIC CONTROL - SOUTH OF USH 151 INTERCHANGE

STAGE 2B, 3B

Addendum No.1
ID 1010-00-72
Revised Sheet 78
October 24, 2012

2

PROJECT NO:1010-00-72	HWY:IH 39	COUNTY:DANE	CONSTRUCTION STAGING	SHEET 78	E

FILE NAME : p:\state\IH_039\1010-00-02.72_USH-12\Traffic\TMP\Staging Plans\Stage Construction2.dgn PLOT DATE : 27-SEP-2012 09:41 PLOT BY : dotexn PLOT NAME : PLOT SCALE : 200.000000:1.000000 WISDOT/CADDS SHEET 42

2

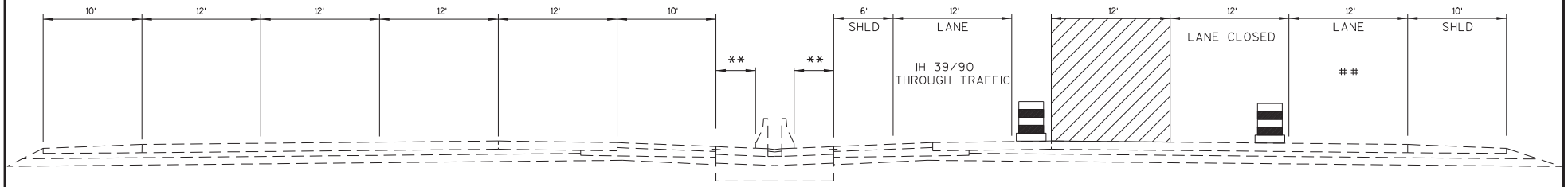

** 2' MIN. 4' NOR.

IH 94/TO USH 151 TRAFFIC (NORTHBOUND)
FROM USH 151/HIGH CROSSING BLVD (SOUTHBOUND)

WORK ZONE

TRAFFIC CONTROL - SOUTH OF USH 151 INTERCHANGE

STAGE 2C, 3C

Addendum No.1
ID 1010-00-72
Revised Sheet 79
October 24, 2012

2

PROJECT NO:1010-00-72	HWY:IH 39	COUNTY:DANE	CONSTRUCTION STAGING	SHEET 79	E

2

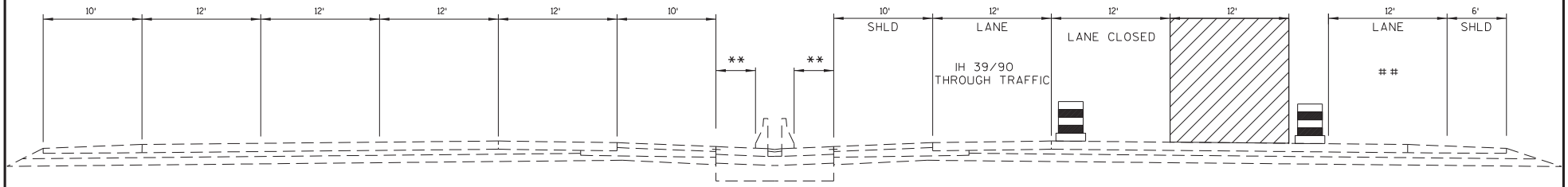

** 2' MIN. 4' NOR.

IH 94/TO USH 151 TRAFFIC (NORTHBOUND)
FROM USH 151/HIGH CROSSING BLVD (SOUTHBOUND)

WORK ZONE

TRAFFIC CONTROL - SOUTH OF USH 151 INTERCHANGE

STAGE 2D, 3D

Addendum No.1
ID 1010-00-72
Revised Sheet 80
October 24, 2012

PROJECT NO:1010-00-72	HWY:IH 39	COUNTY:DANE	CONSTRUCTION STAGING	SHEET 80	E

2

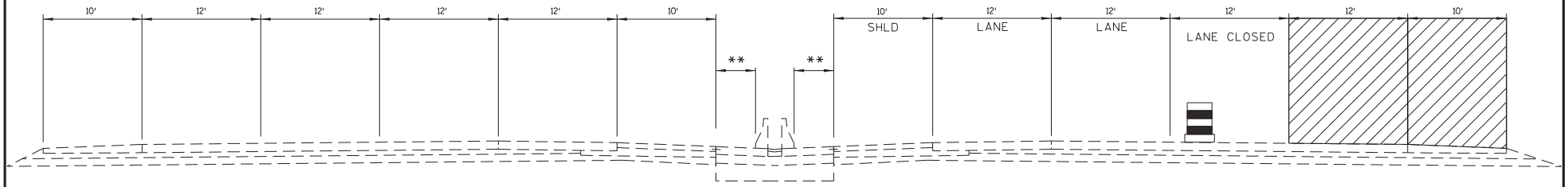

** 2' MIN. 4' NOR.

WORK ZONE

TRAFFIC CONTROL - SOUTH OF USH 151 INTERCHANGE

STAGE 2E, 3E

Addendum No.1
ID 1010-00-72
Revised Sheet 81
October 24, 2012

PROJECT NO:1010-00-72	HWY:IH 39	COUNTY:DANE	CONSTRUCTION STAGING	SHEET 81	E

FILE NAME : p:\state\IH_039\1010-00-02.72_USH-12\Traffic\TMP\Staging Plans\Stage Construction2.dgn PLOT DATE : 27-SEP-2012 09:43 PLOT BY : dotexn PLOT NAME : PLOT SCALE : 200.000000:1.000000 WISDOT/CADDS SHEET 42

2

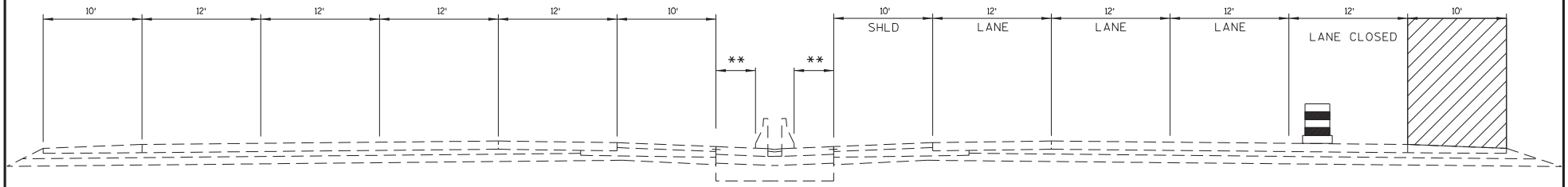

** 2' MIN. 4' NOR.

WORK ZONE

TRAFFIC CONTROL - SOUTH OF USH 151 INTERCHANGE

STAGE 4A

Addendum No.1
ID 1010-00-72
Revised Sheet 82
October 24, 2012

2

PROJECT NO:1010-00-72	HWY:IH 39	COUNTY:DANE	CONSTRUCTION STAGING	SHEET 82	E

FILE NAME : p:\state\IH_039\1010-00-02.72_USH-12\Traffic\TMP\Staging Plans\Stage Construction2.dgn PLOT DATE : 27-SEP-2012 09:44 PLOT BY : dotexn PLOT NAME : PLOT SCALE : 200.000000:1.000000 WISDOT/CADDS SHEET 42

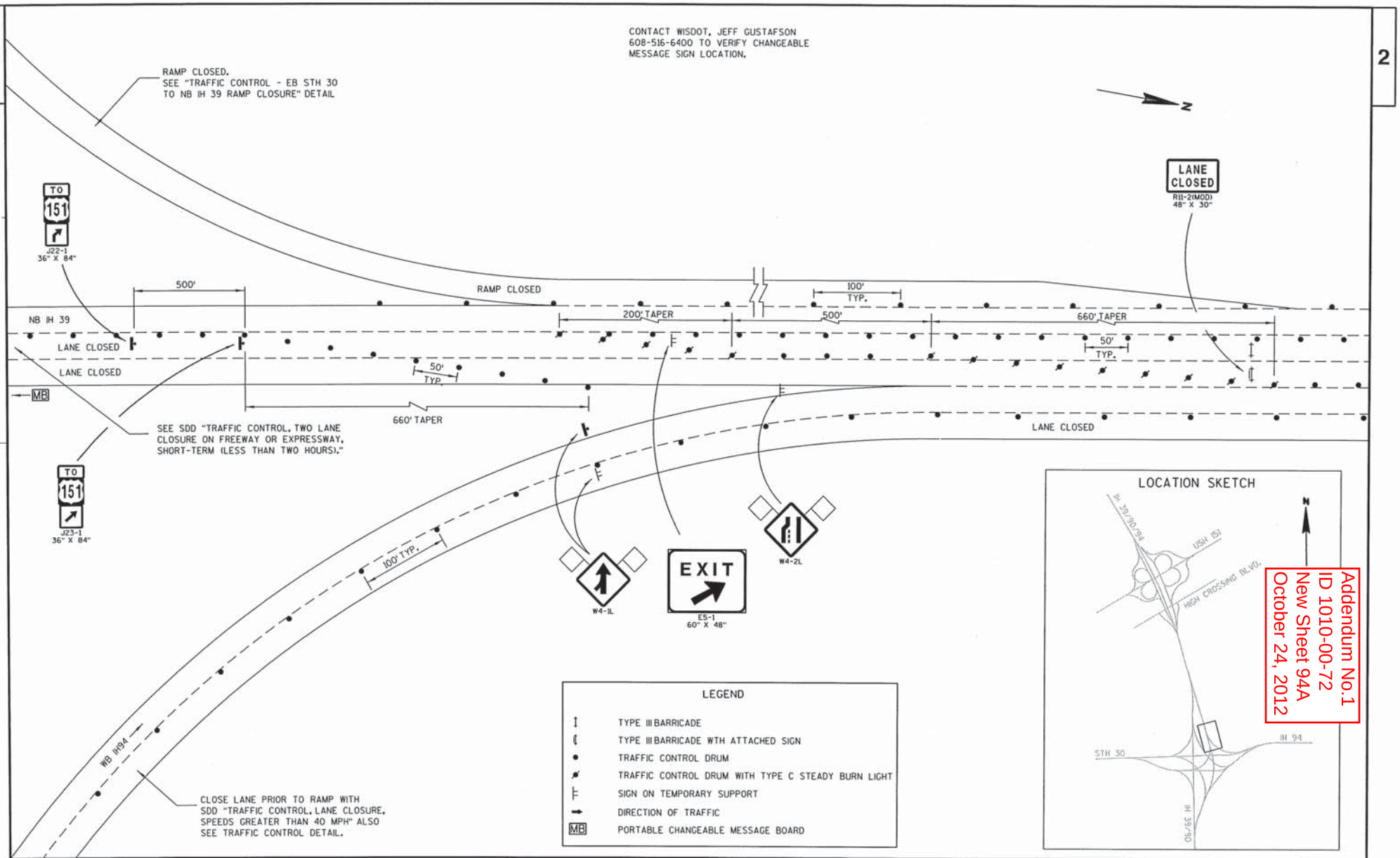

Addendum No.1
ID 1010-00-72
New Sheet 94A
October 24, 2012

PROJECT NO: 1010-00-72	HWY: IH 39	COUNTY: DANE	TRAFFIC CONTROL - NB IH 39 - STAGES 2C, 2D, 3C & 3D	SHEET 94A	E

FILE NAME : R:\Projects\d1_10100072\025012_tc.dgn PLOT DATE : 05-OCT-2012 07:06 PLOT BY : dotj3j PLOT NAME : PLOT SCALE : 100.000000:1.000000 WISDOT/CADDS SHEET 42

2

CONTACT WISDOT, JEFF GUSTAFSON
608-516-6400 TO VERIFY CHANGEABLE
MESSAGE SIGN LOCATION.

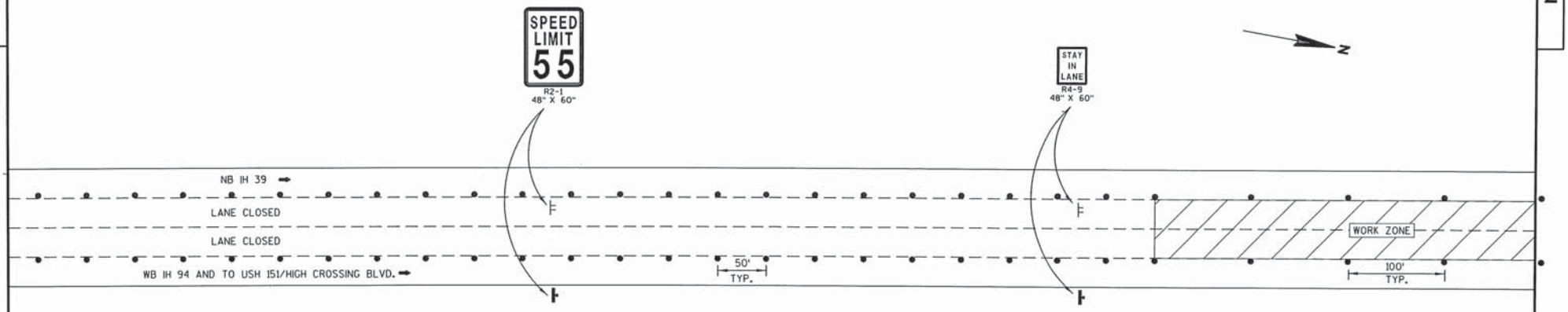

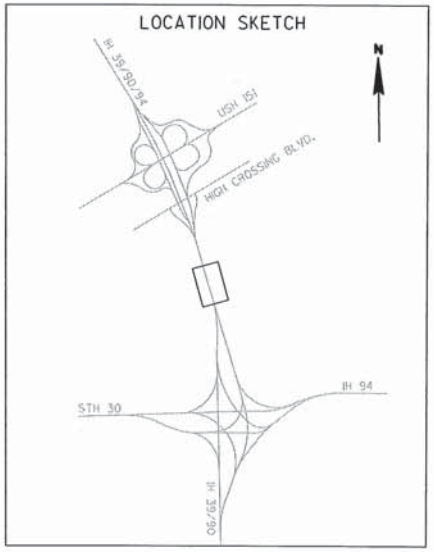

Addendum No.1
ID 1010-00-72
New Sheet 94B
October 24, 2012

2

PROJECT NO:1010-00-72	HWY:IH 39	COUNTY:DANE	TRAFFIC CONTROL - NB IH 39 - STAGES 2C, 2D, 3C & 3D	SHEET 94B	E

FILE NAME : R:\Projects\d1_10100072\025013_tc.dgn PLOT DATE : 04-OCT-2012 08:20 PLOT BY : dotj3j PLOT NAME : PLOT SCALE : 100.000000:1.000000 WISDOT/CADDS SHEET 42

2

CONTACT WISDOT, JEFF GUSTAFSON
608-516-6400 TO VERIFY CHANGEABLE
MESSAGE SIGN LOCATION.

N

NB IH 39 →

100' TYP.

WORK ZONE

CURB & GUTTER

CONCRETE BARRIER

WB IH 94 →

50' TYP.

TO USH 151/HIGH CROSSING BLVD. →

DO NOT CLOSE 2ND RAMP LANE
DURING STAGES 2C & 3C.

TO 39 USE LEFT LANE
J22-1
36" X 90"

LOCATION SKETCH

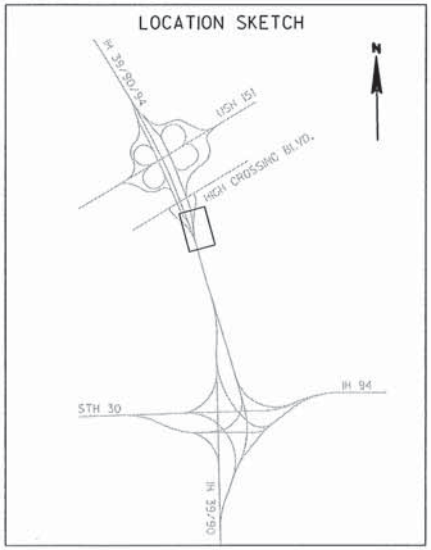

TEMPORARY SIGNING

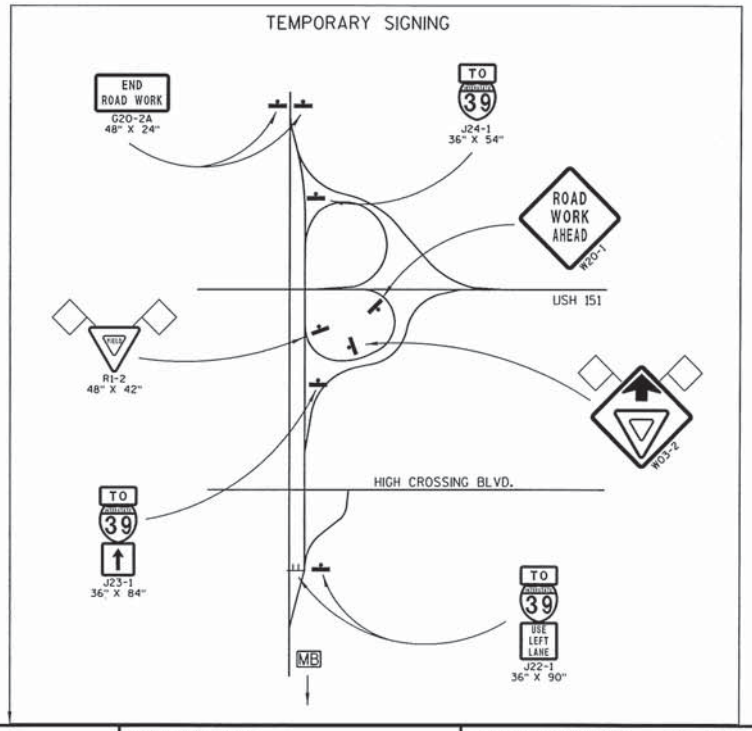

LEGEND

	SIGN ON PERMANENT SUPPORT
	TYPE III BARRICADE
	TYPE III BARRICADE WTH ATTACHED SIGN
	TRAFFIC CONTROL DRUM
	TRAFFIC CONTROL DRUM WITH TYPE C STEADY BURN LIGHT
	SIGN ON TEMPORARY SUPPORT
→	DIRECTION OF TRAFFIC
MB	PORTABLE CHANGEABLE MESSAGE BOARD

Addendum No.1
ID 1010-00-72
New Sheet 94C
October 24, 2012

PROJECT NO: 1010-00-72	HWY: IH 39	COUNTY: DANE	TRAFFIC CONTROL - NB IH 39 - STAGES 2C, 2D, 3C & 3D	SHEET 94C	E

FILE NAME : R:\Projects\d1_10100072\025014_tc.dgn PLOT DATE : 04-OCT-2012 08:20 PLOT BY : dotjjj PLOT NAME : PLOT SCALE : 100.000000:1.000000 WISDOT/CADDS SHEET 42

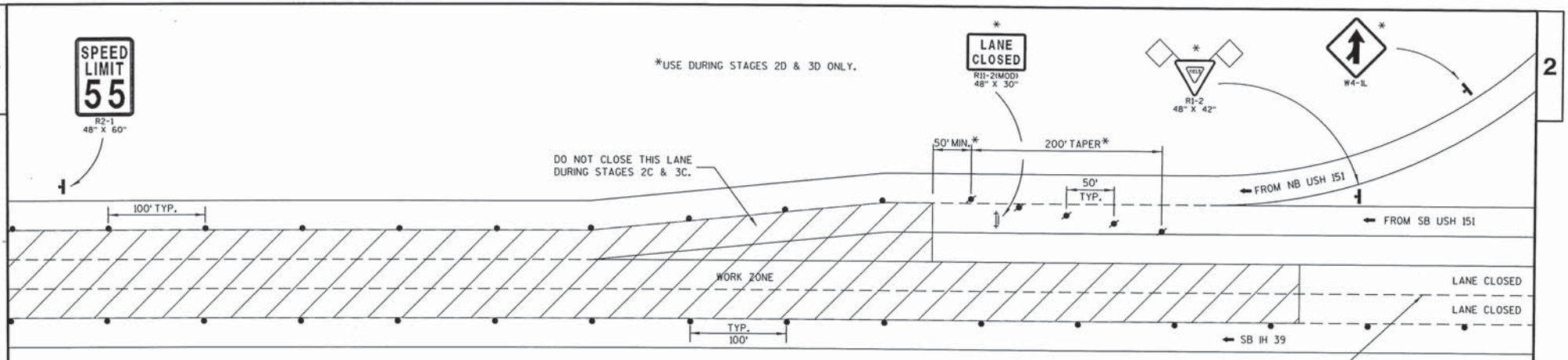

SEE SDD "TRAFFIC CONTROL, TWO LANE CLOSURE ON FREEWAY OR EXPRESSWAY, SHORT TERM (LESS THAN 24 HOURS)"

TEMPORARY SIGNING

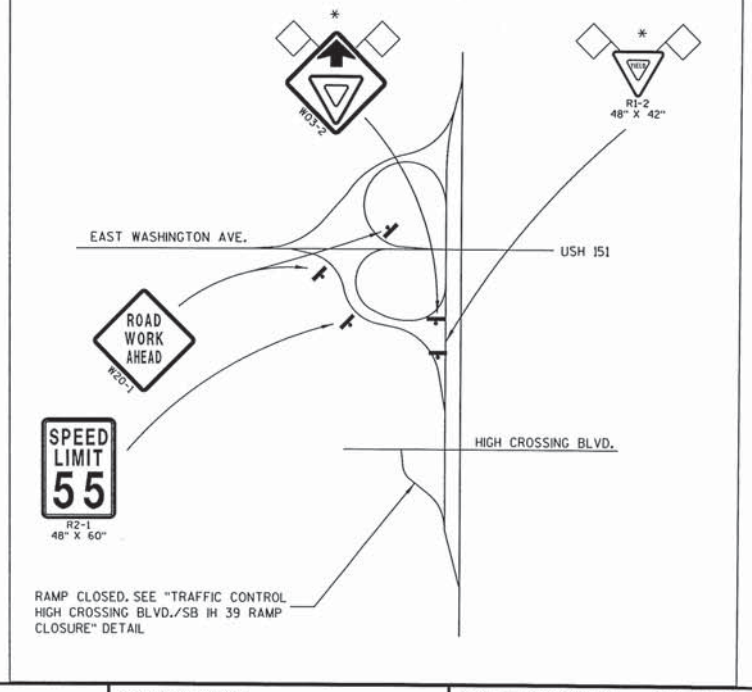

LOCATION SKETCH

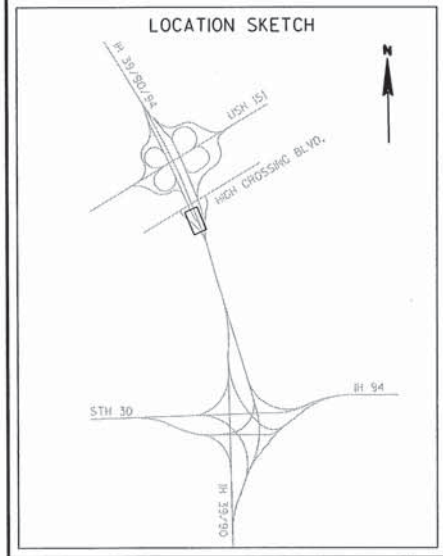

CONTACT WISDOT, JEFF GUSTAFSON 608-516-6400 TO VERIFY CHANGEABLE MESSAGE SIGN LOCATION.

Addendum No.1
ID 1010-00-72
New Sheet 94D
October 24, 2012

LEGEND

- SIGN ON PERMANENT SUPPORT
- TYPE III BARRICADE
- TYPE III BARRICADE WTH ATTACHED SIGN
- TRAFFIC CONTROL DRUM
- TRAFFIC CONTROL DRUM WITH TYPE C STEADY BURN LIGHT
- SIGN ON TEMPORARY SUPPORT
- DIRECTION OF TRAFFIC
- MB PORTABLE CHANGEABLE MESSAGE BOARD

PROJECT NO: 1010-00-72	HWY: IH 39	COUNTY: DANE	TRAFFIC CONTROL - SB IH 39 - STAGES 2C, 2D, 3C & 3D	SHEET 94D	E

2

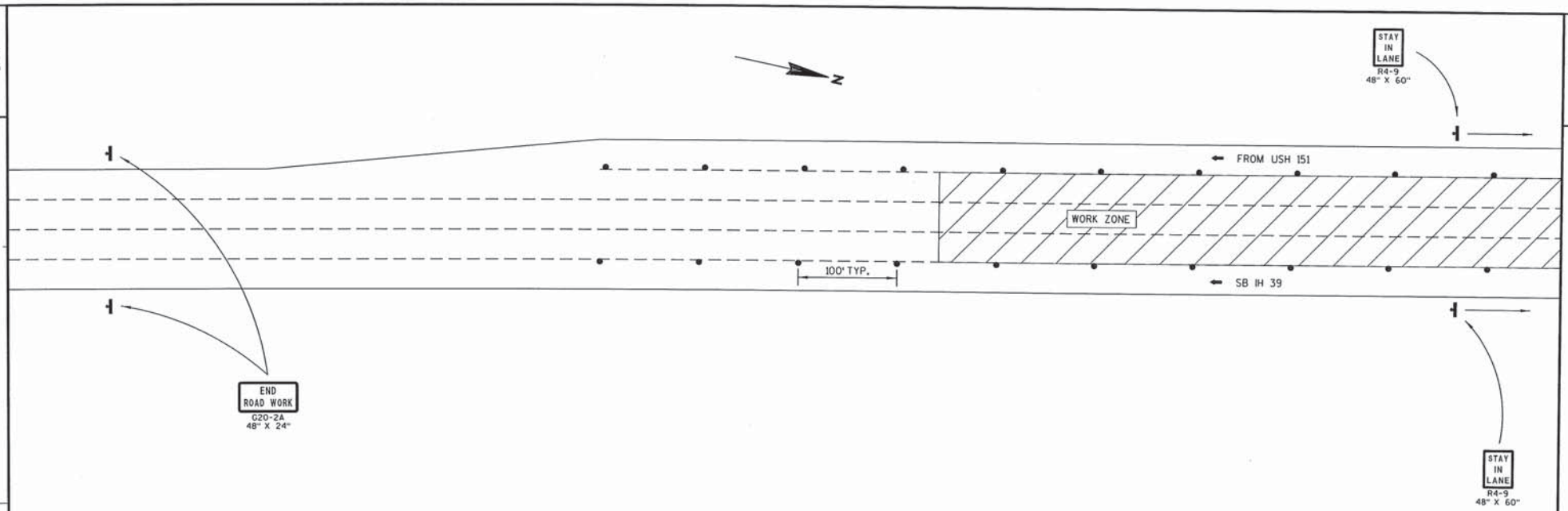

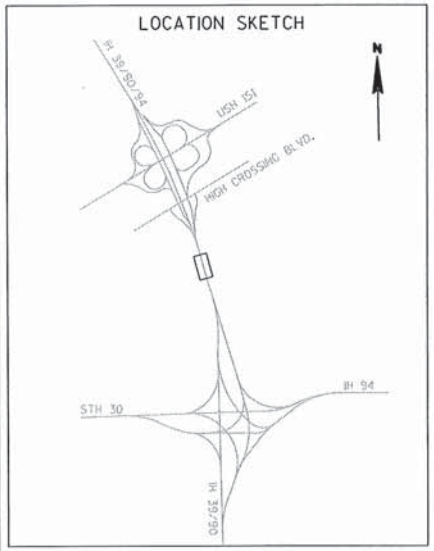

CONTACT WISDOT, JEFF GUSTAFSON
608-516-6400 TO VERIFY CHANGEABLE
MESSAGE SIGN LOCATION.

Addendum No.1
ID 1010-00-72
New Sheet 94E
October 24, 2012

LEGEND

- SIGN ON PERMANENT SUPPORT
- TYPE III BARRICADE
- TYPE III BARRICADE WTH ATTACHED SIGN
- TRAFFIC CONTROL DRUM
- TRAFFIC CONTROL DRUM WITH TYPE C STEADY BURN LIGHT
- SIGN ON TEMPORARY SUPPORT
- DIRECTION OF TRAFFIC
- MB PORTABLE CHANGEABLE MESSAGE BOARD

PROJECT NO:1010-00-72	HWY:IH 39	COUNTY:DANE	TRAFFIC CONTROL - SB IH 39 - STAGES 2C, 2D, 3C & 3D	SHEET 94E	E

PERMANENT TYPE I SIGNS

GROUP CODE	STATION	LOCATION	NUMBER ON PLAN	SIZE SIGN IN X IN	SIGN PLATE NUMBER	635.0200 * SIGN SUPPORTS STRUCTURAL STEEL HS LB	POST TYPE	636.0100 * SIGN SUPPORTS CONCRETE MASONRY CY	636.0500 * SIGN SUPPORTS STEEL REINFORCEMENT LB	637.0101 SIGNS TYPE I SF	638.2601 REMOVING SIGNS TYPE I EACH	638.3100 REMOVING STRUCTURAL STEEL SIGN SUPPORTS EACH	SPV.0060.13 SHORTEN STRUCTURAL STEEL SIGN SUPPORTS EACH	REMARKS
010	210+00 EB	RT	1-4	120 x 30	E1-5	—	—	---	—	25	1	—	—	
	210+00 EB	RT	1-5	204 x 132	E4-1A	—	—	---	—	187	1	—	—	
	247+35 WB	LT	3-1	120 x 30	E1-5	—	—	---	—	25	1	—	—	
	247+35 WB	LT	3-2	204 x 132	E4-1A	—	—	---	—	187	1	—	—	
	263+15 WB	LT	3-15	192 x 60	E3-1	—	—	---	—	80	1	—	2	
	280+00 EB	RT	4-1	192 x 60	D2-2	455	A	1.2	68	80	---	—	—	
	330+60 EB	RT	5-7	168 x 30	E1-5	—	—	---	—	35	1	—	—	
	330+60 EB	RT	5-8	216 x 162	E1-1A	—	—	---	—	243	1	—	—	
	341+10 WB	LT	6-1	120 x 30	E1-5	—	—	---	—	25	1	—	—	INSTALL AT 343+50 WB
	341+10 WB	LT	6-2	168 x 162	E1-1A	1,093	B	1.6	98	189	1	2	—	INSTALL AT 343+50 WB
	355+50 WB	LT	6-11	---	---	—	—	---	—	—	1	2	—	
	369+10 EB	RT	7-3	168 x 30	E1-5	—	—	---	—	35	1	—	—	INSTALL AT 372+00 EB
	369+10 EB	RT	7-4	252 x 132	E4-1A	1,058	B	1.6	98	231	1	2	—	INSTALL AT 372+00 EB
	411+15 EB	RT	8-6	144 x 48	E1-5	—	—	---	—	48	1	—	—	
	431+90 EB	LT	9-3	240 x 108	E8-1	—	—	---	—	180	1	—	—	
	439+30 WB	LT	9-5	336 x 126	E6-51	—	—	---	—	294	1	—	—	
	439+30 WB	LT	9-6	180 x 30	E1-5	—	—	---	—	37.5	1	—	—	
	439+30 WB	LT	9-7	180 x 174	E6-51	—	—	---	—	217.5	1	—	—	
	462+45 EB	RT	10-1	144 x 48	E1-5	—	—	---	—	48	1	—	—	
					TOTAL	2,606		4.4	264	2,167	18	6	2	

* ADDITIONAL QUANTITIES LISTED ELSEWHERE

Addendum No.1
ID 1010-00-72
Revised Sheet 113
October 24, 2012

SIGNS REFLECTIVE FOLDING TYPE II

GROUP CODE	SIGN NO.	RAMP GATE NO.	SIGN PLATE NO.	LOCATION	(637.0402) SIGNS REFLECTIVE FOLDING TYPE II SF	REMARKS
	I39/90/94 & USH 151:					
0010	RG-1	G13-17	R11-54F	SB 151 to NB I39 On Ramp	10	MOUNT ON EXISTING SIGN BRIDGE
	RG-2	G13-18	R11-54F	NB 151 to NB I39 On Ramp	10	MOUNT ON EXISTING SIGN BRIDGE
	RG-3	G13-19	R11-54F	SB 151 to SB I39 On Ramp	10	MOUNT ON EXISTING SIGN BRIDGE
	RG-4	G13-20	R11-54F	NB 151 to SB I39 On Ramp	10	MOUNT ON EXISTING SIGN BRIDGE
	I39/90/94 & HIGH CROSSING BLVD:					
	RG-5	G13-21	R11-54F	NB High Crossing Blvd to SB I39 On Ramp	10	MOUNT ON EXISTING SIGN BRIDGE
	RG-6	G13-21	R11-54F	SB High Crossing Blvd to SB I39 On Ramp	10	MOUNT ON EXISTING SIGN BRIDGE
				TOTAL	60	

MOVING SIGNS

GROUP CODE	STATION	LOCATION	NUMBER ON PLAN	638.2102 MOVING SIGNS TYPE II EACH	638.4000 MOVING SMALL SIGN SUPPORTS EACH	REMARKS
010	260+50 EB	RT	3-14	1	--	INSTALL AT 256+00 EB
	467+00 EB	RT	10-2	1	2	INSTALL AT 455+50 EB
			TOTAL	2	2	

TRAFFIC CONTROL ITEMS

STAGE	LENGTH CALENDAR DAYS	CATEGORY 0010 643.0300 TRAFFIC CONTROL DRUMS DAY	CATEGORY 0010 643.0420 TRAFFIC CONTROL BARRICADES TYPE III DAY	CATEGORY 0010 643.0705 TRAFFIC CONTROL WARNING LIGHTS TYPE A DAY	CATEGORY 0010 643.0715 TRAFFIC CONTROL WARNING LIGHTS TYPE C DAY	CATEGORY 0010 643.0800 TRAFFIC CONTROL ARROW BOARDS DAY	CATEGORY 0010 643.0900 TRAFFIC CONTROL SIGNS DAY	CATEGORY 0010 643.0920 TRAFFIC CONTROL COVERING SIGNS TYPE II EACH	CATEGORY 0010 SPV.0045.01 PORTABLE CHANGEABLE MESSAGE SIGN DAY	REMARKS
PREWARNING	7	70	--	--	--	--	--	--	14	
EASTBOUND										
STAGE 1A	4	330	8	--	104	12	88	--	--	
STAGE 1B	20 *	2,350	92	56	560	52	481	104	41	INCLUDES RAMP CLOSURE PREWARNINGS
STAGE 2A	4	385	15	--	52	8	121	3	--	
STAGE 2B	5	650	42	--	130	15	198	3	--	
STAGE 2C	4	650	33	6	126	12	164	30	7	INCLUDES RAMP CLOSURE PREWARNINGS
STAGE 2D	2	445	19	12	109	6	87	54	5	INCLUDES RAMP CLOSURE PREWARNINGS
STAGE 2E	5	750	70	28	181	9	178	68	44	INCLUDES RAMP CLOSURE PREWARNINGS
STAGE 2F	3	455	24	16	48	6	92	14	15	
STAGE 3A	4	385	15	--	52	8	121	3	--	
STAGE 3B	5	650	42	--	130	15	198	3	--	
STAGE 3C	4	650	33	6	126	12	164	30	7	INCLUDES RAMP CLOSURE PREWARNINGS
STAGE 3D	2	445	19	12	109	6	87	54	5	INCLUDES RAMP CLOSURE PREWARNINGS
STAGE 3E	5	750	70	28	181	9	178	68	44	INCLUDES RAMP CLOSURE PREWARNINGS
STAGE 3F	3	455	24	16	48	6	92	14	15	
STAGE 4A	3	515	43	22	82	6	82	42	49	INCLUDES RAMP CLOSURE PREWARNINGS
STAGE 4B	4	895	68	18	123	8	131	44	29	INCLUDES RAMP CLOSURE PREWARNINGS
STAGE 4C	2	830	53	6	88	4	96	42	7	INCLUDES RAMP CLOSURE PREWARNINGS
WESTBOUND										
STAGE 1A	7	730	28	--	182	21	141	1	--	
STAGE 1B	24 *	2,450	48	8	520	45	356	11	12	INCLUDES RAMP CLOSURE PREWARNINGS
STAGE 2A	4	470	19	4	52	8	90	4	10	INCLUDES RAMP CLOSURE PREWARNINGS
STAGE 2B	4	630	48	4	104	12	150	4	3	
STAGE 2C	4	985	48	4	153	14	187	4	5	
STAGE 2D	1	535	12	4	75	5	79	2	5	
STAGE 2E	4	990	56	22	218	15	182	20	46	INCLUDES RAMP CLOSURE PREWARNINGS
STAGE 2F	3	535	36	22	121	10	128	18	13	
STAGE 3A	4	470	19	4	52	8	90	4	10	INCLUDES RAMP CLOSURE PREWARNINGS
STAGE 3B	4	630	48	4	104	12	150	4	3	
STAGE 3C	4	985	48	4	153	14	187	4	5	
STAGE 3D	1	535	12	4	75	5	79	2	5	
STAGE 3E	4	990	56	22	218	15	182	20	46	INCLUDES RAMP CLOSURE PREWARNINGS
STAGE 3F	3	535	36	22	121	10	128	18	13	
STAGE 4A	3	485	32	22	134	9	144	20	47	INCLUDES RAMP CLOSURE PREWARNINGS
STAGE 4B	4	1,015	61	8	140	14	162	9	19	INCLUDES RAMP CLOSURE PREWARNINGS
STAGE 4C	2	925	63	4	104	4	120	21	10	INCLUDES RAMP CLOSURE PREWARNINGS
	TOTAL	25,555	1,340	388	4,775	415	5,113	742	534	

* INCLUDES CONCRETE CURB WORK (INCLUDING CURE TIME) AND USH 51 RAMP EXTENSIONS

Addendum No.1
ID 1010-00-72
Revised Sheet 117
October 24, 2012

NOTES

1. All Signs are Type I - Type SH Reflective - reference WIS DOT Standard Specification for HIGHWAY and STRUCTURE CONSTRUCTION latest edition.
2. Color:
   Background - Green
   Message - White
3. Message Series - E Modified except all cap WORDS are Series E

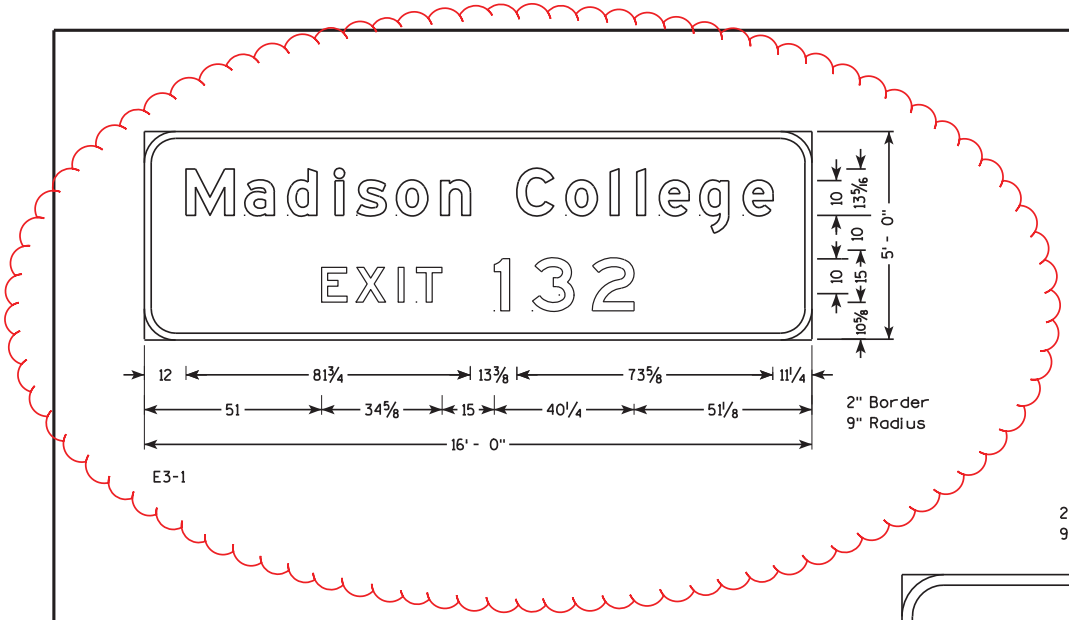

E3-1

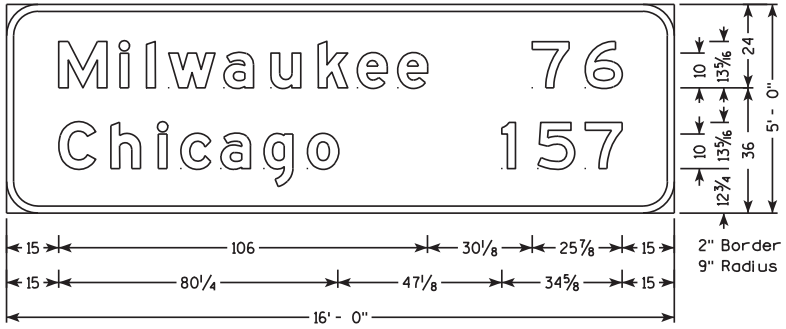

D2-2

E1 - 5

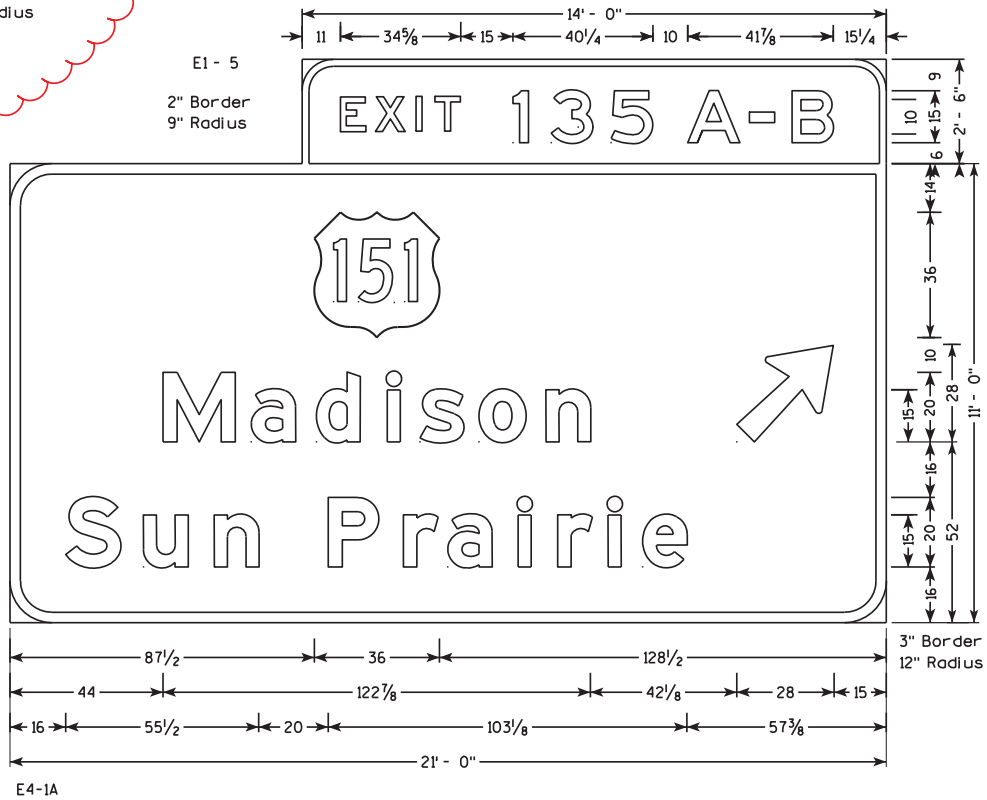

E4-1A

Addendum No.1
ID 1010-00-72
Revised Sheet 166
October 24, 2012

7

7

PROJECT NO: 1010-00-72	HWY: IH 39	COUNTY: DANE	PERMANENT SIGNING	SHEET NO: 166	E