IDEX	PART NO.	DESCRIPTION	QTY
1	3642HD5	LD 36" X 42" HDPE HANDHOLE	
2	38-FRM-PE	38" POLY FRAME	
3	ESS38NC	37.45" X 1" COVER/LID	
		WISDOT COMMUNICATIONS	

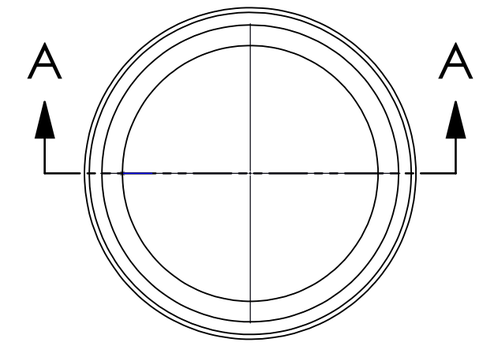

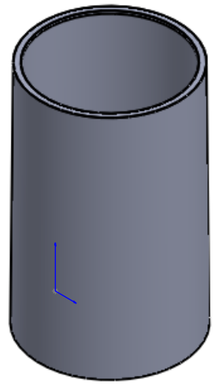

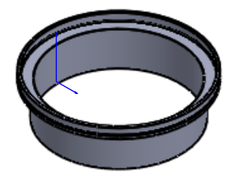

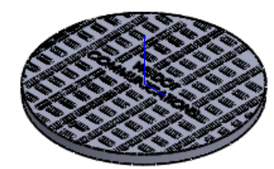

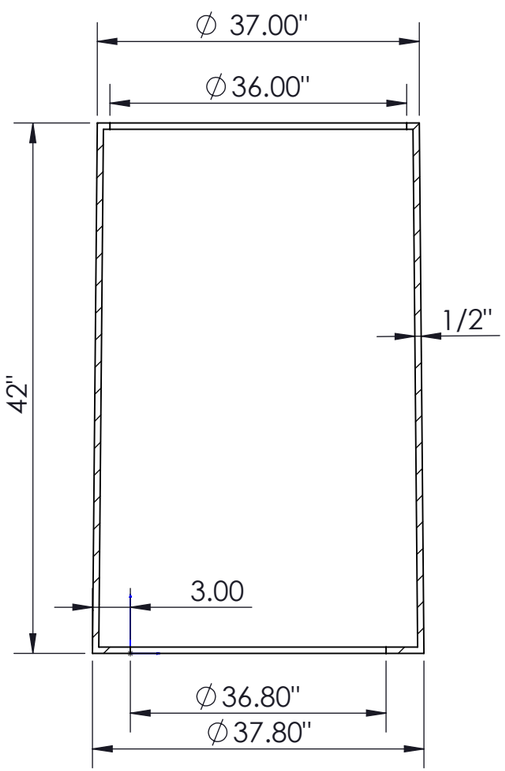

A - LD 36" X 42" HANDHOLE
(3642HD5)

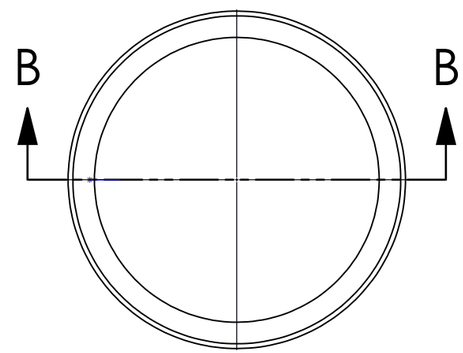

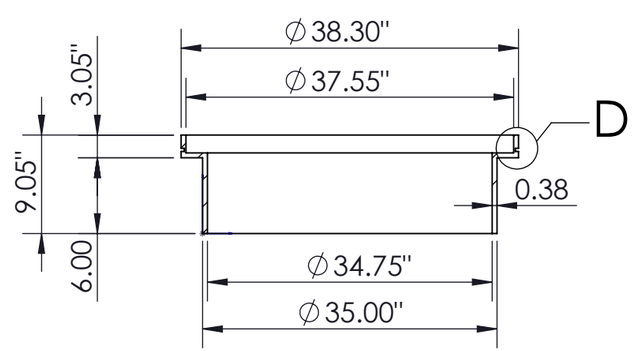

B - FRAME
(38-FRM-PE)

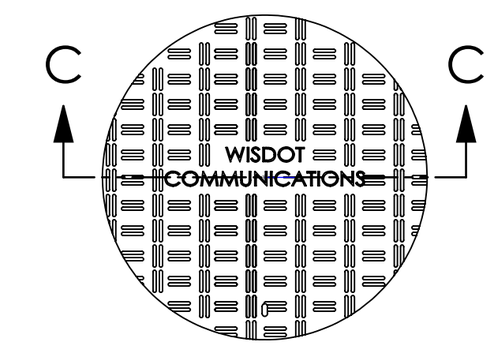

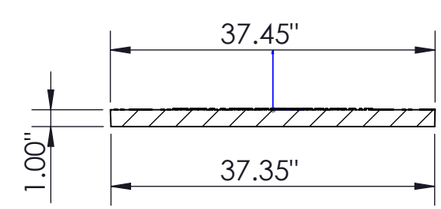

C-COVER/LID
(ESS37.5NC)

ESS SINCE 1867 BROTHERS AND SONS, INC.
PHONE (763) 478-2027
FAX (763) 478-8868

DRAWN BY: DM CHECKED. BY: NGN

REVISION DESCRIPTION	DATE
	12/31/1799
	12/31/1799

JOB: 36X42_WISDOT COMMUNICATIONS
LOCATION: ELECTRICAL
CONTRACTOR: ESS BROTHERS
ESS JOB NO ____ SHEET NO. 1 OF 1 DATE DRAWN: 3/10/2017