STATE PROJECT	FEDERAL PROJECT	
	PROJECT	CONTRACT
0014-77-03	———	—

STATE OF WISCONSIN
DEPARTMENT OF TRANSPORTATION

PLAN OF PROPOSED IMPROVEMENT

EAST COUNTY LINE–LOMIRA RD.

REST AREA # 63 & 64

WAYSIDE IMPROVEMENTS, U.S.H. 41

DODGE COUNTY

STATE PROJECT NUMBER
0014-77-03

0 20FT

INDEX OF SHEETS

TOTAL SHEETS = 36

DESIGN DESIGNATION

A.D.T. 1988	= 19900
A.D.T. 2008	= 25600
D.H.V.	=
D.	= 60/40
T.	= 17%
V.	= 65MPH

CONVENTIONAL SIGNS

COUNTY LINE
CORPORATE LIMITS
PROPERTY LINE
LOT LINE
LIMITED HIGHWAY EASEMENT
EXISTING RIGHT OF WAY
NEW RIGHT OF WAY
REFERENCE LINE
SLOPE INTERCEPT
ORIGINAL GROUND
MARSH OR ROCK PROFILE
CULVERT IN PLACE
CULVERT REQUIRED
CULVERT REQUIRED (Profile)

COMBUSTIBLE FLUIDS (UNDER PRESSURE) — CAUTION
UNDERGROUND UTILITIES
GAS — G
ELECTRIC — E
TELEPHONE — T
SERVICE PEDESTAL
CABLE MARKER
POWER POLE
TELEPHONE POLE
RAILROADS
MARSH
WOODED AREA

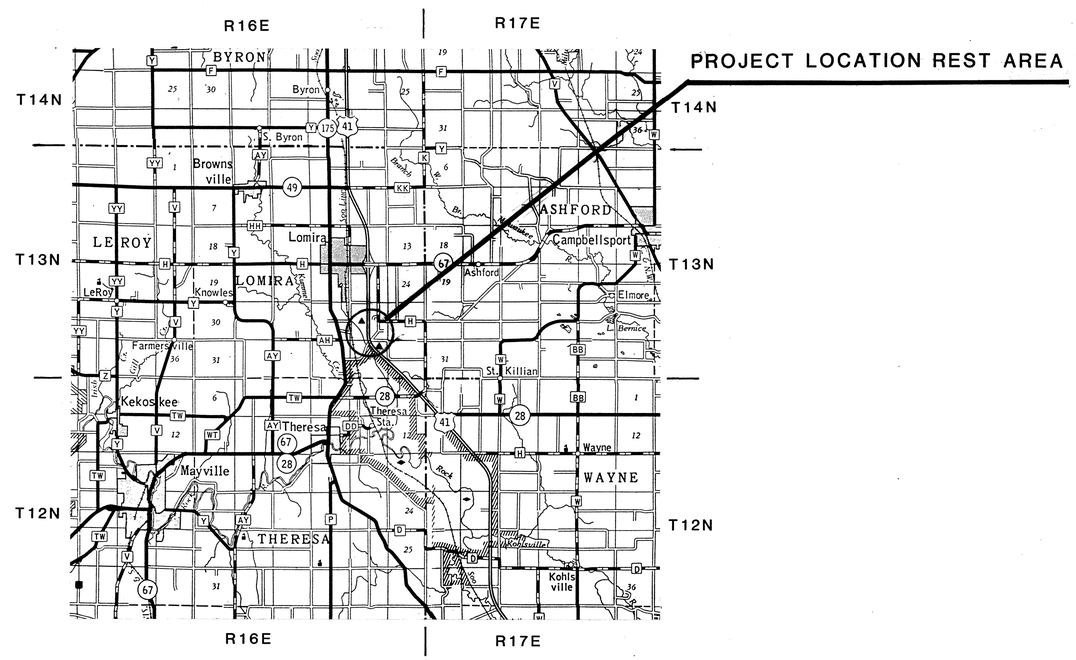

LAYOUT
SCALE 0 2 MI.

TOTAL NET LENGTH OF CENTERLINE = 0.00 MI. (RURAL)

WISCONSIN PROFESSIONAL ENGINEER — GRAEF, ANHALT, SCHLOEMER, Milwaukee, Wis.

WISCONSIN ARCHITECT — TERENCE R. MOONEY, A-2597, Milwaukee, WIS.

STATE OF WISCONSIN
DEPARTMENT OF TRANSPORTATION

Surveyor G.A.S./J.B.B. District Checker H.L.P.
Designer G.A.S./T.R.M. C.O. Checker
District Supervisor K.G.B. C.O. Coordinator

APPROVED:
DATE: 5-13-88 Thomas J. Batchelor
DISTRICT TRANSPORTATION DIRECTOR

APPROVED:
DATE: 6/30/88 Ted Stephenson
CHIEF MAINTENANCE ENGINEER

U.S. DEPARTMENT OF TRANSPORTATION
FEDERAL HIGHWAY ADMINISTRATION
REGION 5 WISCONSIN DIVISION

APPROVED:
DATE:
DIVISION ADMINISTRATOR

WISDOT/VEHICLE NO. 10

0014-77-03	R: 15 JUN
	2
SHEET INDEX & SYMBOLS	M

STATE OF WISCONSIN
DEPARTMENT OF TRANSPORTATION

WAYSIDE REST AREA

ARCHITECTURAL SYMBOLS

SYMBOL	DESCRIPTION
A / A5	DESIGNATES BUILDING SECTION
5 / A8	TOP NUMBER DESIGNATES DETAIL NUMBER BOTTOM NUMBER DESIGNATES SHEET NUMBER
7	DESIGNATES INTERIOR WALL ELEVATIONS
	NEW GRASS AREA (SOD)
	NEW GRASS AREA (SEED)
	NEW CONCRETE SURFACES
	NEW BITUMINOUS PAVEMENT
	CONCRETE (SECTION)
	GRAVEL (SECTION)
	BATT INSULATION
	FINISH WOOD
	ROADWAY LIGHT
	WALKWAY LIGHT
27	EXISTING TREE (CALIPER INCHES)
58	EXISTING CONTOUR
58	NEW CONTOUR
SBL	SOUTHBOUND BASE LINE
NBL	NORTHBOUND BASELINE

PLUMBING SYMBOL SCHEDULE

SYMBOLS	ABBR.	DESCRIPTION
	SAN.	SANITARY SEWER BELOW GROUND
	ST	STORM OR CLEAR WATER WASTE PIPING BELOW GROUND
	VP	VENT PIPING BELOW GROUND
	SP/WP	SOIL OR WASTE PIPING ABOVE GROUND
	VP	VENT PIPING ABOVE GROUND
T	T	TEMPERED WATER PIPING
	ST./D.S.	STORM OR DOWNSPOUT PIPING ABOVE GROUND
	CW	COLD WATER PIPING
	HW	HOT WATER PIPING
	HWR	HOT WATER RETURN PIPING
	CH.V.	CHECK VALVE
	BL.V.	BALL VALVE
	GT.V.	GATE VALVE
	F.D.	FLOOR DRAIN
	H.B.	HOSE BIBB
	C.O./F.C.O.	CLEANOUT OR FLUSH CLEANOUT
	UP	PIPING UP
	DN.	PIPING DOWN
00.00'	I.E.	INVERT ELEVATION
1		INDICATES REFERENCE TO CORRESPONDING PIPING ISOMETRICS

HVAC SYMBOL SCHEDULE

SYMBOL	DESCRIPTION
	SUPPLY OR OUT SIDE AIR DUCT SECTION
	EXHAUST OR RETURN DUCT SECTION
	FLEXIBLE DUCT CONNECTION
MVD	MANUAL VOLUME DAMPER
E	ELECTRIC MOTOR DAMPER
CD	CEILING DIFFUSER
SR	SUPPLY REGISTER
RG	RETURN GRILLE
TG	TRANSFER GRILLE
EG	EXHAUST GRILLE
T	THERMOSTAT
	GAS PIPING
	GAS COCK

ELECTRICAL SYMBOL SCHEDULE

SYMBOL	DESCRIPTION
	1' X 4' SURFACE MT'D FLUORESCENT
	SURFACE MT'D INC./HPS FIXTURE
	WALL MOUNTED HPS FIXTURE
	RECESSED HPS FIXTURE
	SINGLE POLE SWITCH
P	SINGLE POLE SWITCH WITH PILOT LT.
	DUPLEX RCPT
G	GROUND FAULT RCPT.
W	TELEPHONE OUTLET - WALL MOUNTED
	TELEPHONE OUTLET MT'D. 18" A.F.F.
	MOTOR
PC	PHOTO-CELL
TC	TIME-CLOCK
MD	MOTION DETECTOR
	JUNCTION BOX
T	THERMOSTAT
H W H	HOT WATER HEATER
W B	WIRED BY
L	LIGHT (SCHEDULE
R	RCPT (SCHEDULE)
M	MOTOR (SCHEDULE)
SPST	SINGLE POLE SINGLE THROW SWITCH
CP	CONTROL PANEL
CS	COMBINATION STARTER
PEC	PROJECT ELECTRICAL CONTRACTOR
HV	HEATING & VENTILATING CONTRACTOR
WC	WELL CONTRACTOR
OU	ON UNIT
NU	NEAR UNIT
DO	DOOR OPERATOR
HD	HAND DRYER
	PUSH BUTTON - WIRED BY PEC

CONSULTANTS

GRAEF, ANHALT, SCHLOEMER & ASSOCIATES, INC.
345 NORTH 95th STREET
MILWAUKEE, WISCONSIN 53226
(414) 259-1500

STS CONSULTANTS LTD.
9055 N. 51st STREET
MILWAUKEE, WISCONSIN 53223
(414) 354-1100

FRED L. MAYER, INC.
350 WEST GREEN TREE ROAD
MILWAUKEE, WISCONSIN 53217-3898
(414) 352-7430

LEEDY & PETZOLD INC.
345 N 95th STREET
MILWAUKEE, WISCONSIN 53226
(414) 257-3355

INDEX OF DRAWINGS

0014-77-03	2.1
SITE PLAN (SOUTH BOUND)	SP1

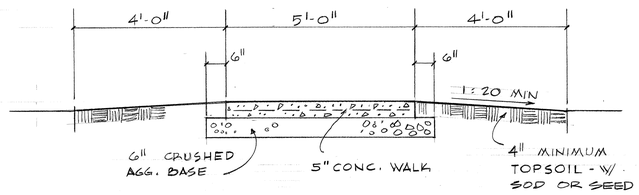

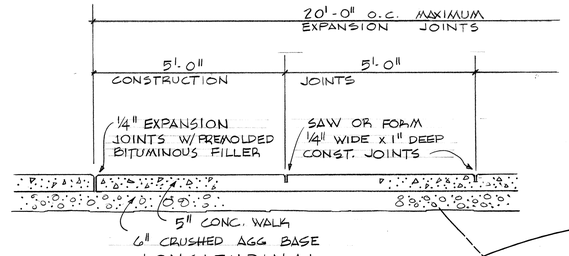

1 SP1 TYPICAL SECTIONS- CONCRETE WALK

0' 5' SCALE 1/2" = 1'-0"

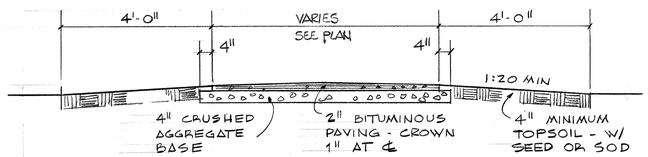

2 SP1 TYPICAL SECTION - BITUMINOUS PAVING

0' 5' SCALE 1/2" = 1'-0"

SITE PLAN NOTES

(7) TYPICAL NOTE

1. EXISTING TOILET BUILDING - TO BE REMOVED.
2. EXISTING WELL - REMOVE CANOPY.
3. REMOVE BITUMINOUS WALK.
4. RESTORE AREA DAMAGED BY DEMOLITION & CONSTRUCTION.
5. EXISTING MAP CASE - TO REMAIN.
6. NEW WELL
7. NEW LP FUEL TANK. PROVIDE CONNECTION TO BUILDING.
8. NEW PC CONCRETE WALK, DTL 1/SP1.
9. NEW BITUMINOUS PAVEMENT, DTL 2/SP1.
10. SAW CUT EXISTING BITUMINOUS PAVEMENT PATCH, AS REQUIRED.
11. NEW TIMBER CAR STOPS S.D.D. 14C1-2.
12. NEW SOD, TOPSOIL & FERTILIZER
13. TOPSOIL AND SEED & FERTILIZER
14. REMOVE EXISTING TIMBER EDGE AND ASPHALT.
15. HANDICAP WALKWAY - PAINT STRIPING.
16. PARKING STALL STRIPING
17. TERMINATE NEW PAVING AT EXISTING - MEET EXISTING GRADE AT THIS POINT.
18. MULCH
19. CONTRACT LIMIT LINE - ALL AREAS WITHIN THIS LINE ARE TO BE RESTORED TO ORIGINAL CONDITION UNLESS SHOWN OTHERWISE.
20. REMOVE EXISTING TREE - CALIPER SHOWN.
21. HANDICAP PARKING SIGNS TO BE PROVIDED BY WIS/DOT.
22. NOT USED
23. NOT USED
24. WALKWAY LIGHT, SEE DRAWING SP3, FOR TYPE & LOCATION.
25. ROAD LIGHT - SEE DRAWING SP3, FOR TYPE & LOCATION.
26. NOT USED
27. LOCATION OF TEMPORARY FENCE WHEN EXISTING TOILET BUILDING IS OPEN.
28. LOCATION OF TEMPORARY FENCE WHEN EXISTING TOILET BUILDING IS CLOSED.
29. EXPOSED AGGREGATE CONCRETE - SEE 3/L6
30. BENCH - SEE DWG SP4

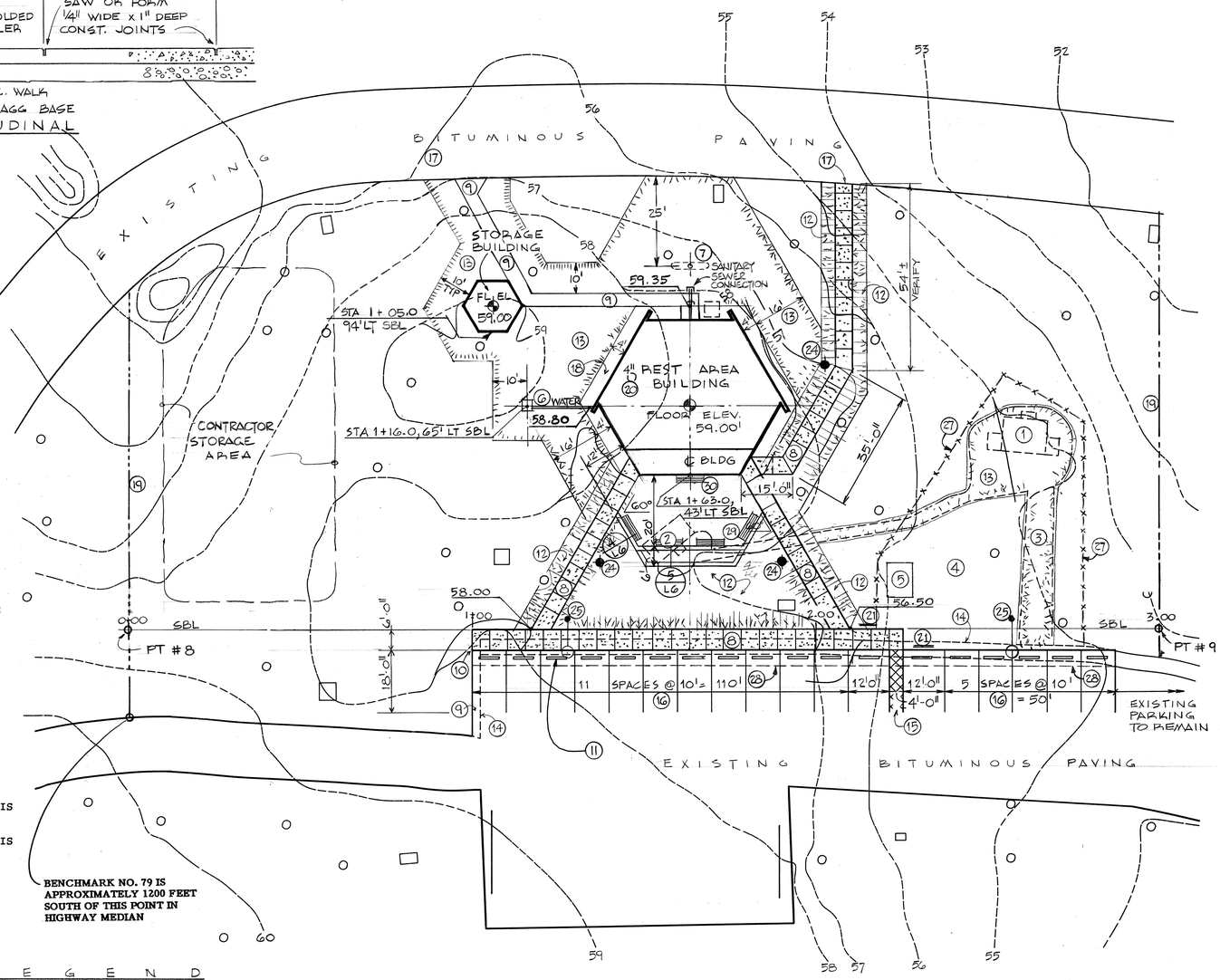

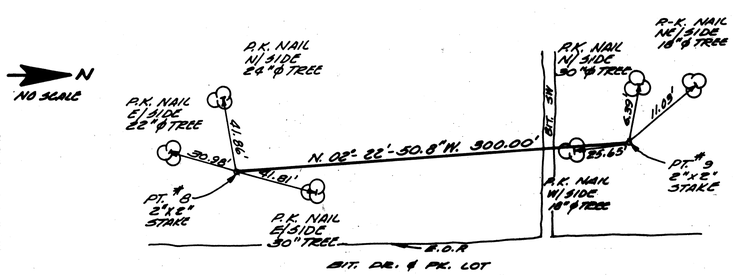

LEGEND

STA 0+10.0, 28' LT SBL — LOCATION OF POINT RELATED TO SOUTH BASE LINE (SBL)

58.00 — POINT ELEVATION (NEW)

SITE PLAN (SOUTH BOUND)

0 10 20 30 40 FT

No. 63

NORTH

BENCHMARK NO. 79

DESCRIPTION	ELEVATION
CHISELED SQUARE ON THE EAST CENTER OF INLET APPROX. 100' NORTH OF THE INTER. OF U. S. H. 41 AND SOO RD.	947.18

NOTE: THE '9' IS TRUNCATED ON THESE PLANS. CONTOUR LINE 55 WOULD BE (9)55 RELATED TO ABOVE

	2.2
0014-77-03	R: 15 JUNE 88
SITE PLAN (NORTH BOUND)	SP2

SITE PLAN NOTES

(7) TYPICAL NOTE

1. EXISTING TOILET BUILDING - TO BE REMOVED.
2. NOT USED
3. REMOVE BITUMINOUS WALK.
4. RESTORE AREA DAMAGED BY DEMOLITION & CONSTRUCTION.
5. EXISTING MAP CASE - TO REMAIN.
6. NEW WELL
7. NEW LP FUEL TANK
8. NEW 5" CONCRETE WALK, DTL 1/SP1
9. NEW BITUMINOUS PAVEMENT, DTL 2/SP1
10. NOT USED
11. NEW TIMBER CAR STOPS S.D.D. 14C1-2
12. NEW SOD
13. TOPSOIL AND SEED
14. NOT USED
15. NOT USED
16. PARKING STALL STRIPING
17. TERMINATE NEW PAVING AT EXISTING - MEET EXISTING GRADE AT THIS POINT.
18. MULCH
19. CONTRACT LIMIT LINE - ALL AREAS WITHIN THIS LINE ARE TO BE RESTORED TO ORIGINAL CONDITION UNLESS SHOWN OTHERWISE.
20. REMOVE EXISTING TREE - CALIPER SHOWN.
21. HANDICAP PARKING SIGNS
22. REMOVE EXISTING FENCE.
23. CONCRETE STEPS - 4 RISERS, DETAIL 1/SP2
24. WALKWAY LIGHT, SEE DRAWING SP3 FOR TYPE & LOCATION.
25. ROAD LIGHT - SEE DRAWING SP3 FOR TYPE & LOCATION.
26. SAWCUT EXISTING PAVEMENT, EXCAVATE FOR CONDUIT, REPLACE FILL, REPLACE PAVEMENT.
27. LOCATION OF TEMPORARY FENCE
28. NOT USED
29. EXPOSED AGGREGATE CONCRETE - SEE 3/L6
30. BENCH - SEE DWG SP.4

BENCHMARK NO. 78 IS APPROXIMATELY 130 FEET SOUTH OF THIS POINT IN HIGHWAY MEDIAN

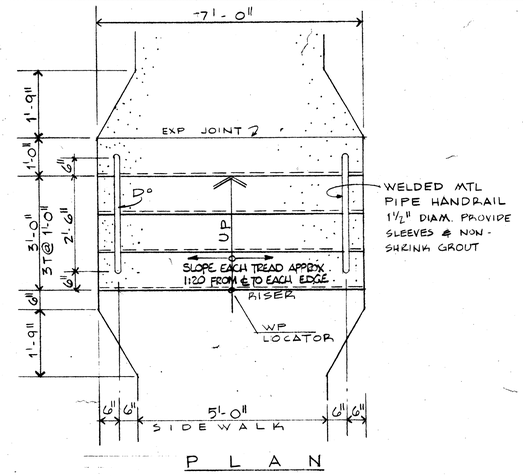

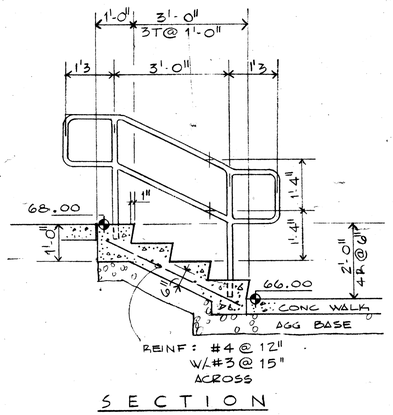

(1) SP2 CONCRETE STEPS

SCALE ½" = 1'-0"

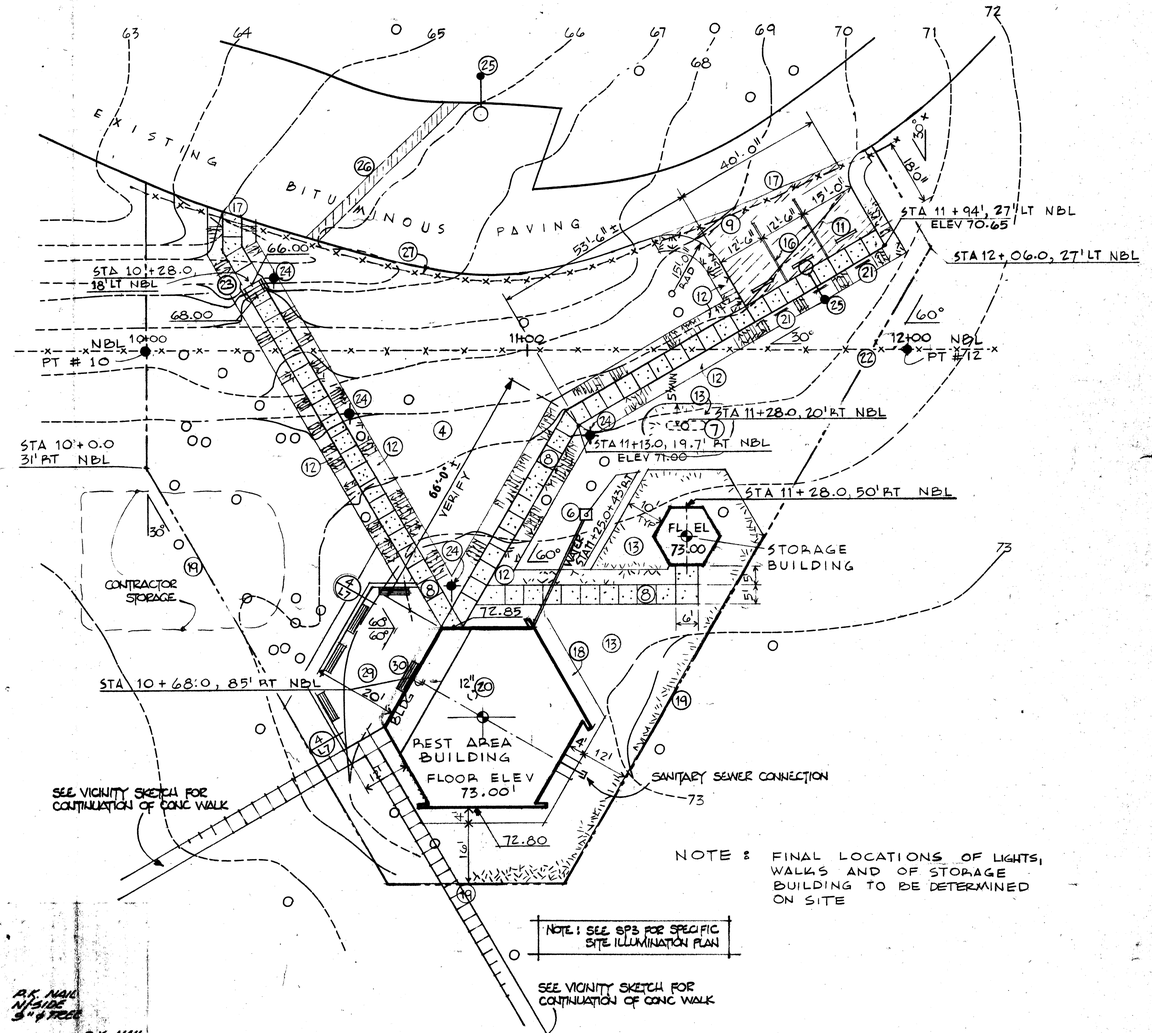

NOTE: FINAL LOCATIONS OF LIGHTS, WALKS AND OF STORAGE BUILDING TO BE DETERMINED ON SITE

SITE PLAN (NORTH BOUND)

0 10 20 30 40 FT

No. 64

NORTH

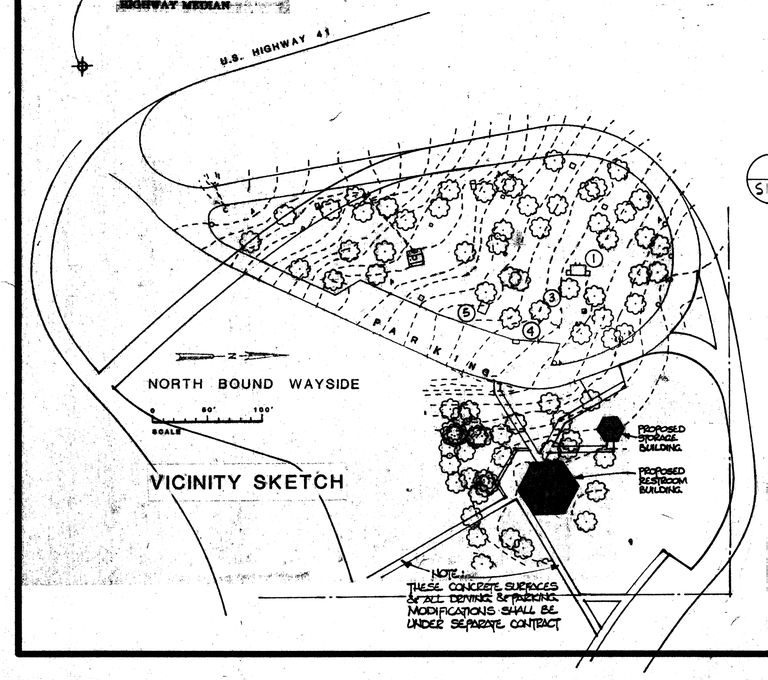

VICINITY SKETCH

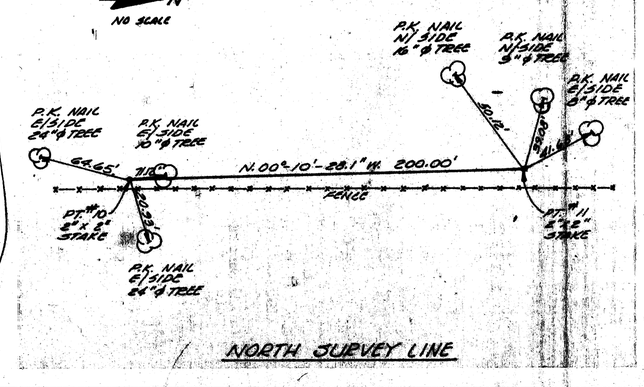

BENCHMARK NO. 78

DESCRIPTION	ELEVATION
CHISELED SQUARE ON THE EAST CENTER OF INLET APPROX. 950' SOUTHEAST OF THE INTER. OF U. S. H. 41 AND SOO RD.	964.36

NOTE: THE "Y" IS TRUNCATED ON THESE PLANS. CONTOUR LINE 55 WOULD BE (9)55 RELATED TO ABOVE

STATE PROJECT NUMBER	SHEET NO.
0014-77-03 2.3	SP 3

ELECTRICAL WORK

R: 15 JUNE 88

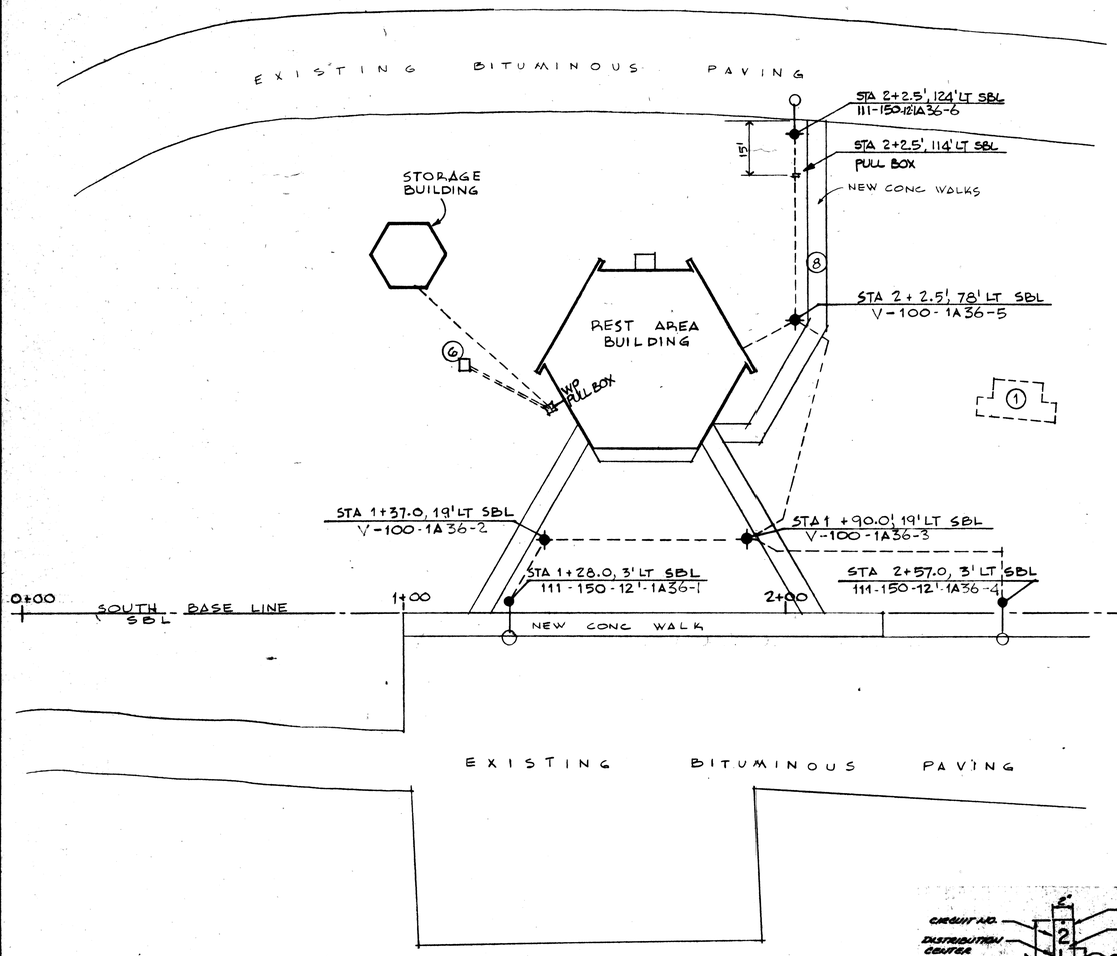

SITE PLAN SOUTHBOUND

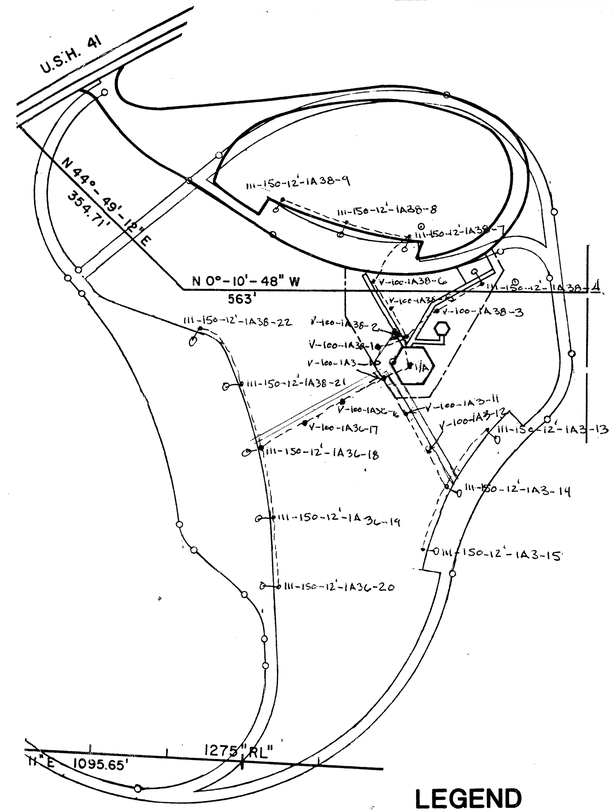

LEGEND

(8) ITEM IDENTIFICATION SEE DWG SP-1

------- 2" PVC CONDUIT W/ 2 #12 & 1-#12 (PER CKT) AWG GROUND. SINGLE CONDUCTOR INSULATED COPPER. ALL CONDUCTORS TO BE STRANDED

====== 3/4" PVC W/ 3-#10 AWG - SAME AS ABOVE

✦ WALKWAY LIGHT: V-100-1A34-5
- IDENT NO.
- PANEL & CIRCUIT
- LUMINARE WATTS
- PHOTOMETRIC DISTRIBUTION

O—O ROADWAY LIGHT: III-150-12-1A34-2
- PANEL & CIRCUIT
- MAST ARM LENGTH
- LUMINARE WATTS
- PHOTOMETRIC DISTRIBUTION

SITE PLAN NORTHBOUND

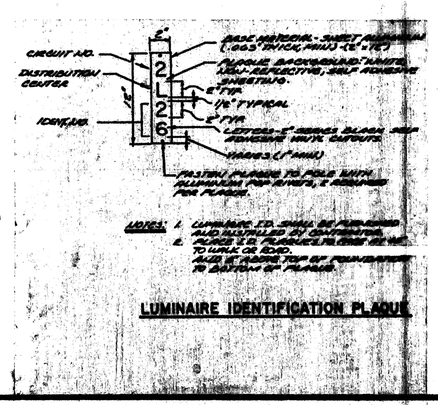

LUMINAIRE IDENTIFICATION PLAQUE

NORTH

STATE PROJECT NUMBER		SHEET NO.
0014-77-03	2.4	SP4

WELL DETAILS

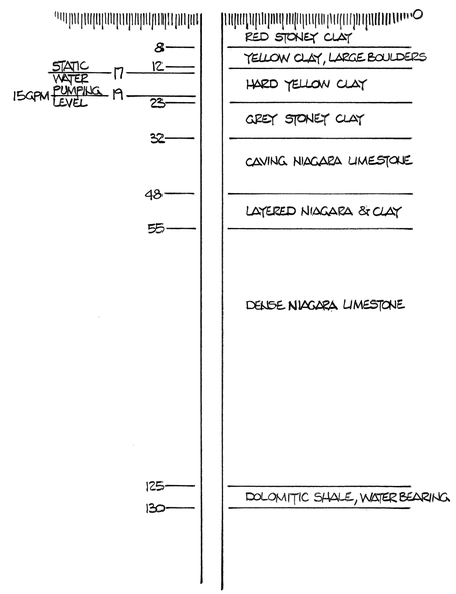

GEOLOGY OF EXISTING WELL

AT REST AREA #63

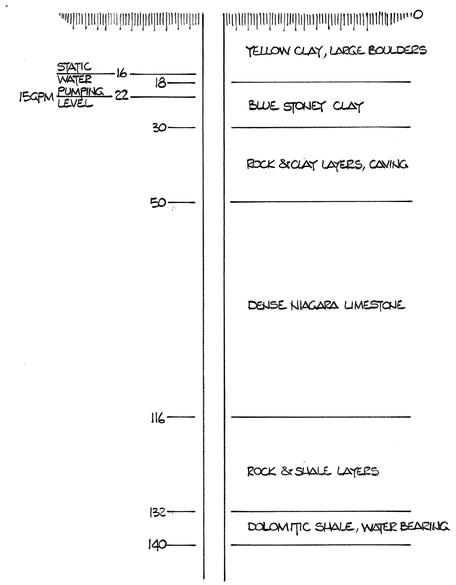

GEOLOGY OF EXISTING WELL

AT REST AREA #64

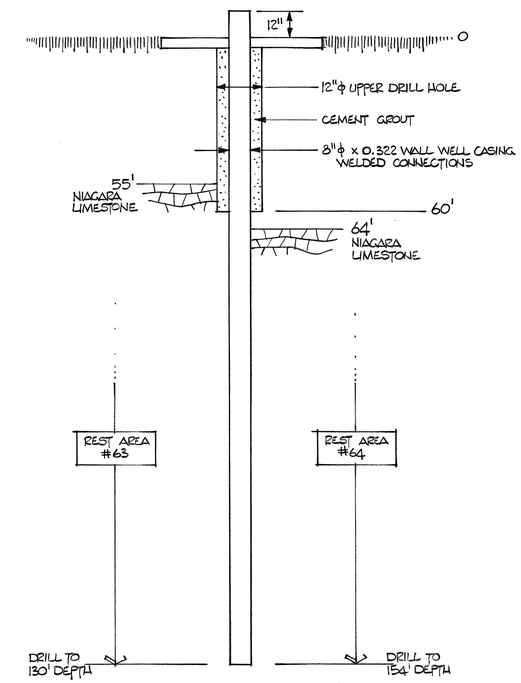

TYPICAL WELL CONSTRUCTION

REST AREA #63 & REST AREA #64

NOTES

1. STEEL FOR BENCH SUPPORTS SHALL CONFORM TO ASTM A-36, ALL EXPOSED STEEL SHALL BE PAINTED SUITABLE RUST INHIBITOR PAINT, DARK DULL BROWN AND ACCEPTABLE TO THE ENGINEER.
2. REINFORCING STEEL SHALL BE GRADE 60 BAR STEEL.
3. BENCH FASTENERS SHALL BE 5/8" CARRIAGE BOLTS, GALVANIZED.
4. CONCRETE SHALL CONFORM TO REQUIREMENTS OF SEC. 501, CONCRETE MASONARY, STANDARD SPECIFICATIONS FOR ROAD AND BRIDGE CONSTRUCTION, WISCONSIN DIVISION OF HIGHWAYS, 1981 EDITION.
5. BENCH SEATS SHALL BE CONSTRUCTED OF CCA OR ACA TREATED DOUGLAS FIR 2"X4" CUT AND FINISHED AS SHOWN.
6. STAIN FOR BENCH SEATS SHALL BE WOOD PRESERVATIVE, BROWN, WISCONSIN SPECIFICATIONS 517.2.11.
7. SPACERS FOR BENCH SHALL BE MADE OF GALVANIZED WASHERS OR STEEL PIECES SUFFICIENT TO PROVIDE 3/8 SPACE.
8. ALL SHARP EXPOSED EDGES OF THE DOUGLAS FIR USED TO CONSTRUCT BENCHES SHALL BE BEVELED.
9. ALL EXPOSED EDGES OF STEEL BENCH SUPPORTS AND SPACERS SHALL BE MACHINED SMOOTH.

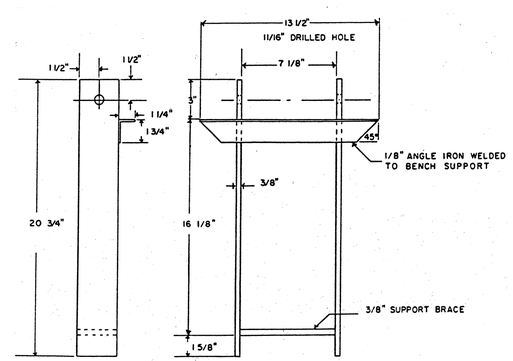

WOOD BENCH SUPPORT

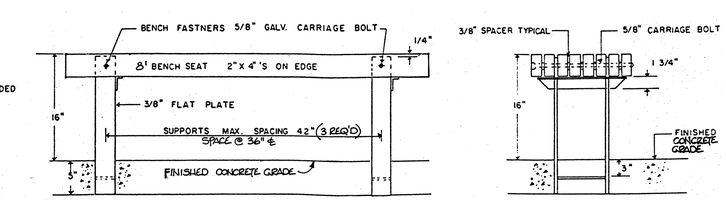

WOOD BENCH MOUNT

STATE PROJECT NUMBER		SHEET NO.
0014-77-03	2.5	SP 5

WELL PUMP HOUSING AND
WELL PUMP INSTALLATION DETAILS
DRAWING P15

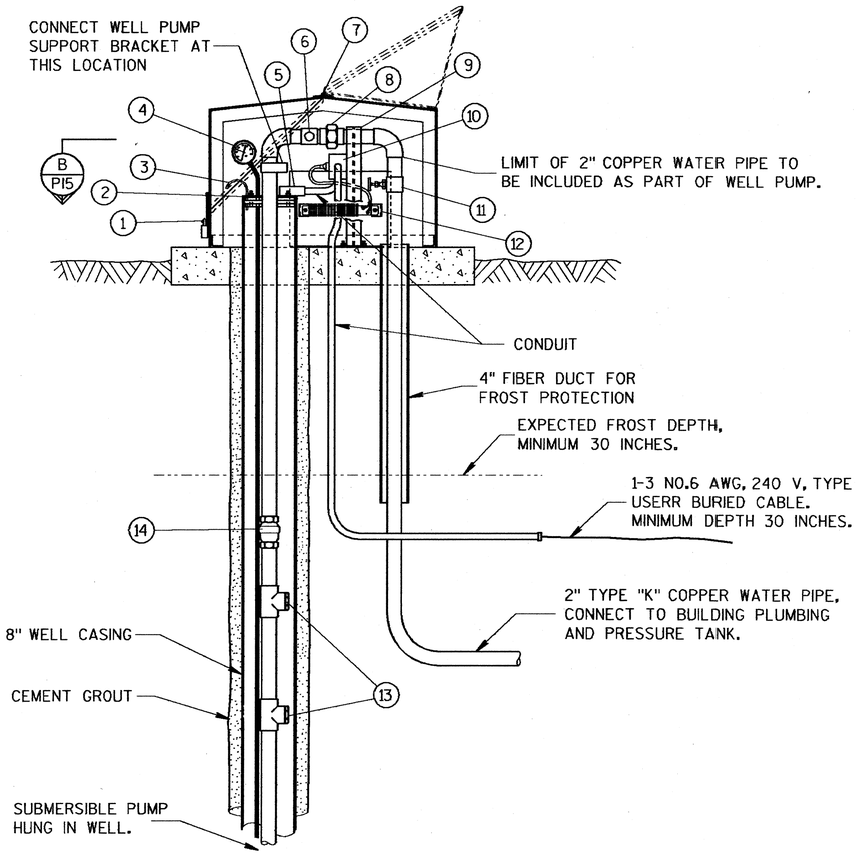

A P15 SECTION THRU WELL

LEGEND

1. HASP LOCK.
2. CLAYTON-MARK TYPE WELL SEAL WITH SOLID TOP PLATE.
3. AIR VENT.
4. AIR LINE AND ALTITUDE GAUGE.
5. CONDULET.
6. AUTOMATIC AIR CHARGER. (EXCEPT WHEN BLADDER TYPE PRESSURE TANKS ARE USED IN WATER SUPPLY SYSTEM.)
7. 3" CONTINUOUS HINGE.
8. 2" PIPE UNION.
9. PIPE SUPPORT.
10. JUNCTION BOX & WEATHERPROOF OUTLET.
11. WATER SAMPLING VALVE.
12. RADIANT HEATER, 750 WATT, 240 VOLT, THERMOSTATICALLY CONTROLED (ON AT 35-38°F., OFF AT 45-50°F.). TYPE CHROMALOX CAT. NO. OTF-12, PCN 128100 OR APPROVED EQUAL.
13. BLEEDER ORIFICE. (EXCEPT WHEN BLADDER TYPE PRESSURE TANKS ARE USED IN WATER SUPPLY SYSTEM.)
14. CHECK VALVE.

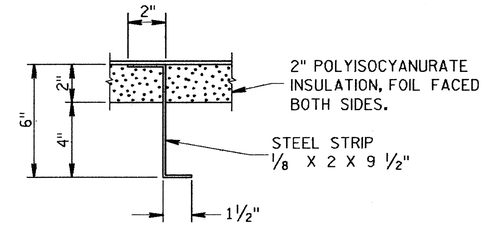

1 P15 HEATER MOUNT

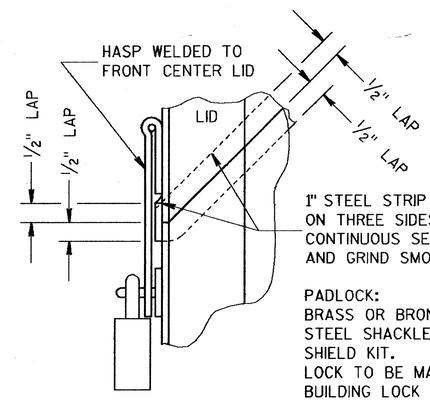

2 P15 HASP & DRIP EDGE DETAIL

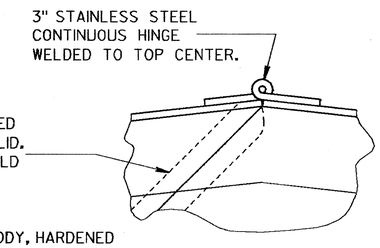

3 P15 HINGE DETAIL

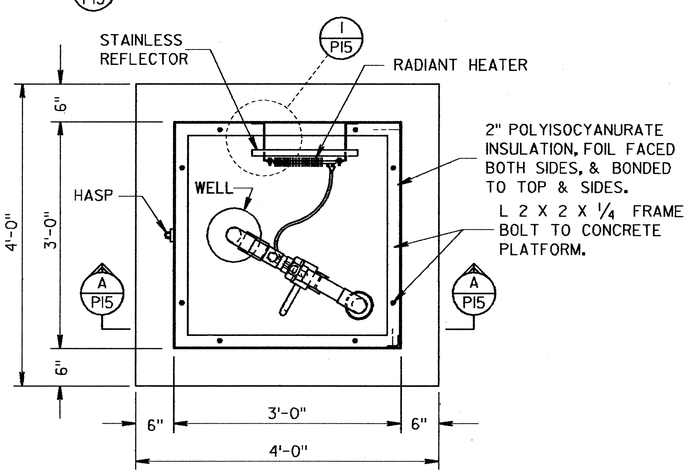

B P15 SECTION THRU HOUSING

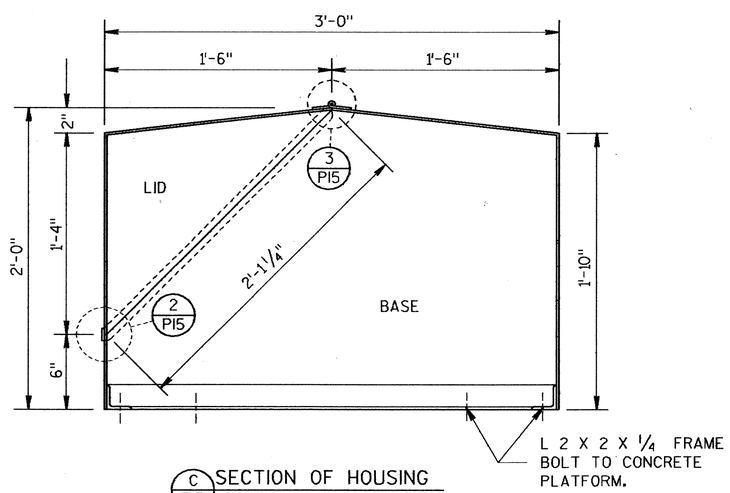

C P15 SECTION OF HOUSING

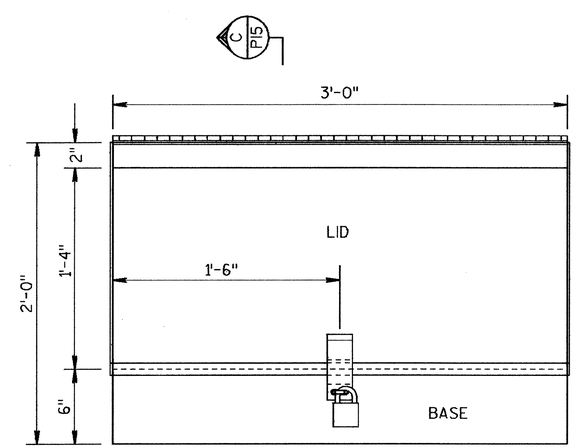

FRONT VIEW OF HOUSING

PLOT SCALE: 1:10
PLOT NAME: WELL
REV. DATE: 5-29-87
ORIGINATOR: JRM RM 651 DESIGN, HFSTB
LEVELS ON = 1.
40.

FILE NAME: HDGN:[32,33]WELLHEAD.DGN

STATE PROJECT NUMBER		SHEET NO.
0014-77-03	2.6	SP 6

REST AREA
WALKWAY LIGHT & POLE
MISC. SHEET

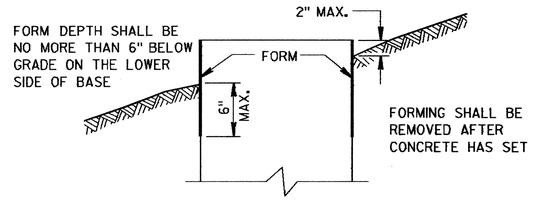

FORMING DETAIL

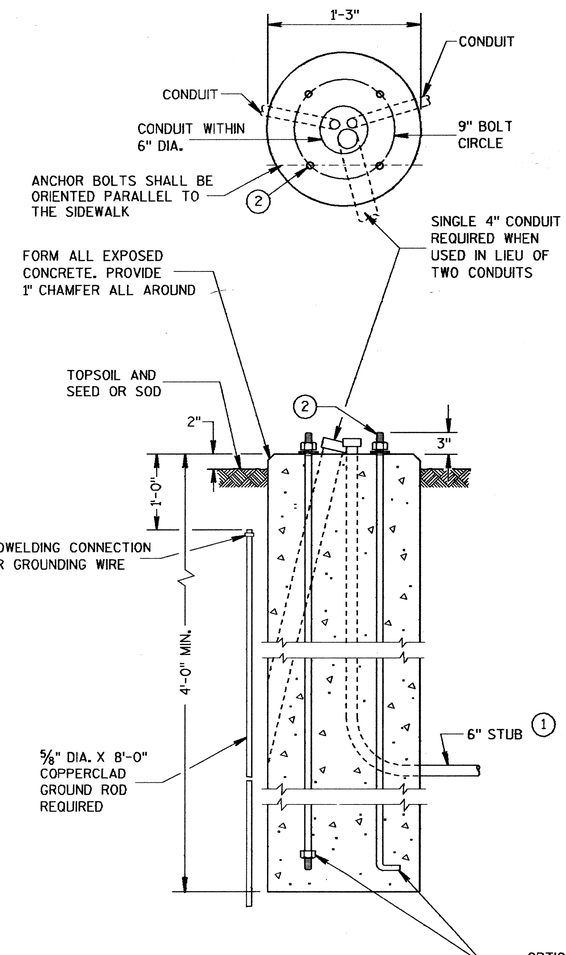

TYPE 11
CONCRETE BASE

NOTES (CONCRETE BASE)

DETAILS OF CONSTRUCTION, MATERIALS AND WORKMANSHIP NOT SHOWN ON THIS DRAWING SHALL CONFORM TO THE PERTINENT REQUIREMENTS OF THE CONTRACT.

TOP SURFACES OF CONCRETE BASES SHALL BE TROWEL FINISHED AND LEVEL.

MINIMUM BENDING RADIUS OF CONDUIT = 6 X THE DIAMETER.

CONDUIT HEIGHT ABOVE CONCRETE BASES SHALL BE 1 INCH. ALL METALLIC CONDUIT ENDS SHALL BE REAMED AND THREADED. ALL METALLIC CONDUITS IN WHICH WIRE OR CABLE IS NOT TO BE INSTALLED SHALL BE CAPPED.

ALL CONDUIT ENDS AT THE TOP OF CONCRETE BASES SHALL BE CAPPED IF METALLIC OR PLUGGED IF NONMETALLIC IMMEDIATELY AFTER PLACEMENT AND BEFORE CONCRETE IS POURED. CONDUITS IN WHICH WIRE OR CABLE IS NOT INSTALLED SHALL REMAIN CAPPED OR PLUGGED.

ENDS OF CONDUIT INSTALLED BELOW GRADE FOR FUTURE USE SHALL BE CAPPED IF METALLIC OR PLUGGED IF NONMETALLIC.

WHEN REQUIRED TO CONNECT NONMETALLIC CONDUIT TO METALLIC CONDUIT, ONLY ADAPTER FITTINGS, U. L. LISTED FOR ELECTRICAL USE, SHALL BE USED.

IF A BASE REQUIRES A DEEP FORM BECAUSE OF LOOSE DIRT OR FILL, THE FORM SHALL BE REMOVED BEFORE BACKFILLING AROUND THE BASE. BACKFILL SHALL BE TAMPED TIGHT AGAINST THE BARE CONCRETE BASE IN LAYERS OF 1FOOT OR LESS.

A NO. 6 AWG, STRANDED COPPER GROUNDING WIRE SHALL BE CADWELDED TO THE GROUND ROD.

THE GROUNDING WIRE SHALL ENTER THE BASE THROUGH A 1 INCH CONDUIT INSTALLED FOR GROUNDING PURPOSES, LEAVING A 4 FOOT COIL OF WIRE ABOVE THE CONCRETE BASE. THE GROUNDING WIRE SHALL BE NEATLY COILED AND THE COILS TIED TOGETHER.

WHEN ANCHOR BOLTS USING THE ALTERNATE "L" BEND ARE FURNISHED, THE 4 INCH "L" BEND SHALL BE IN ADDITION TO THE SPECIFIED ANCHOR BOLT BAR LENGTH.

(1) DEPTH OF CONDUIT EXITING THE CONCRETE BASE AND INSTALLED BELOW THE TRAVELED WAY SHALL BE 24 INCHES. DEPTH OF CONDUIT EXITING THE CONCRETE BASE THAT IS NOT INSTALLED BELOW THE TRAVELED WAY SHALL BE 18 INCHES. MIN. DEPTHS ARE GIVEN. 36 INCH DEPTH IS MAX.

(2) (4) 1" DIA. X 3'-6" ANCHOR BOLTS.

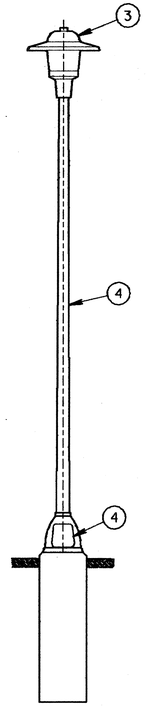

NOTES (WALKWAY LIGHT)

(3) FIXTURE:

100 WATT HIGH PRESSURE SODIUM FIXTURE WITH A MULTI-TAP HIGH REACTANCE HPF BALLAST.

THE BASE SHALL HAVE AN INTEGRAL CAST POLE TOP FITTER THAT FITS A 3 INCH O. D. POLE.

THE REFRACTOR SHALL BE A ONE PIECE PRISMATIC REFRACTOR WITH A TYPE "V" SYMMETRIC LIGHT PATTERN. THE REFRACTOR SHALL BE ONE PIECE INJECTION MOLDED POLYCARBONATE.

THE BALLAST ASSEMBLY SHALL BE OF MODULAR DESIGN AND SHALL CONTAIN ALL ELECTRICAL COMPONENTS INCLUDING BALLAST, TERMINAL BLOCK, SOCKET, STARTER AND BRACKET. THE STARTER SHALL BE FULLY ENCAPSULATED AND OF QUICK DISCONNECT TYPE.

AN ANSI WATTAGE LABEL SHALL BE LOCATED ON THE LOWER HOUSING ABOVE THE SLIPFITTER. WATTAGE, VOLTAGE AND WIRING DIAGRAM LABELS SHALL BE LOCATED ON THE INSIDE OF THE LUMINAIRE HOUSING.

(4) POLE AND PEDESTAL BASE:

THE POLE AND PEDESTAL BASE SHALL BE A ONE PIECE WELDED UNIT, WITH AN OVERALL HEIGHT OF TEN FEET.

THE POLE SHALL BE A TAPERED ALUMINUM POLE WITH A 3 INCH OUTSIDE DIAMETER TOP AND 0.125 INCH WALL THICKNESS.

THE PEDESTAL BASE SHALL BE 12 1/2 INCHES IN DIAMETER AND HAVE A 9 INCH BOLT CIRCLE.

THE ACCESS DOOR OPENING SHALL BE APPROXIMATELY 7 1/2" X 5 1/4" X 7 1/2".

THE FIXTURE, POLE AND PEDESTAL BASE SHALL BE PAINTED WITH AN EARTH COLORED THERMOSET POWDER COAT, ACRYLIC ENAMEL. THE ENAMEL SHALL BE FORMULATED TO SHOW NO APPRECIABLE FADING WITHIN FIVE YEARS.

0014-77-03	2.7
LANDSCAPE DETAILS	L6

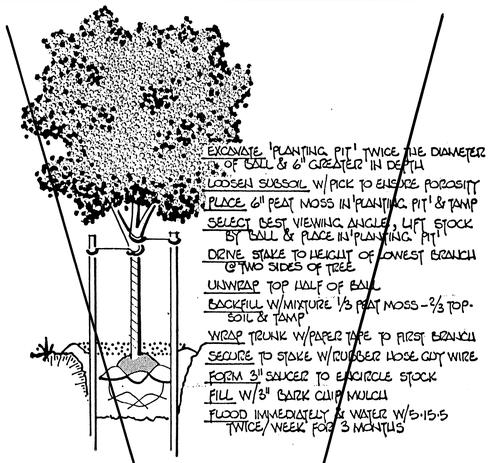

11/L6 TREE TRANSPLANTING DETAIL

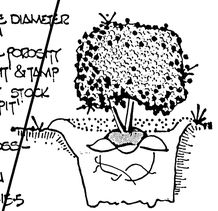

12/L6 SHRUB TRANSPLANTING DETAIL

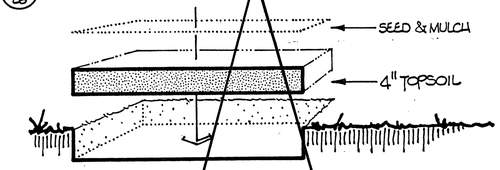

EXCAVATING CONTRACTOR TO SPREAD 4" [MINIMUM] TOPSOIL TO ACHIEVE FINISHED LAWN GRADE
LANDSCAPE ARCHITECT TO APPROVE FINISHED LAWN GRADE PRIOR TO THE SEWING OF SEED
LANDSCAPE CONTRACTOR TO RAKE & ROLL FINISHED GRADE REFER TO SPECIFICATION FOR APPROPRIATE SEED BLEND

13/L6 SEED OPERATIONS DETAIL

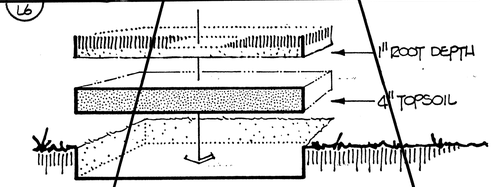

EXCAVATING CONTRACTOR TO SPREAD 4" [MINIMUM] TOPSOIL TO WITHIN 1" OF FINISHED GRADE
LANDSCAPE ARCHITECT TO APPROVE FINISHED LAWN GRADE PRIOR TO THE LAYING OF SOD
LANDSCAPE CONTRACTOR TO RAKE & ROLL FINISHED GRADE LAY SOD IN 'RUNNING BOND' FASHION [W/ALTERNATE JOINTS]

14/L6 SOD OPERATIONS DETAIL

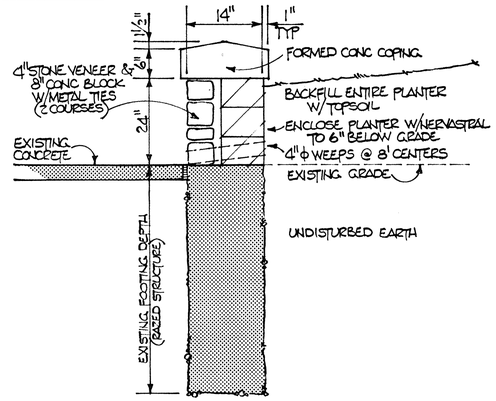

7/L6 PLANTER ON EXISTING FOOTING

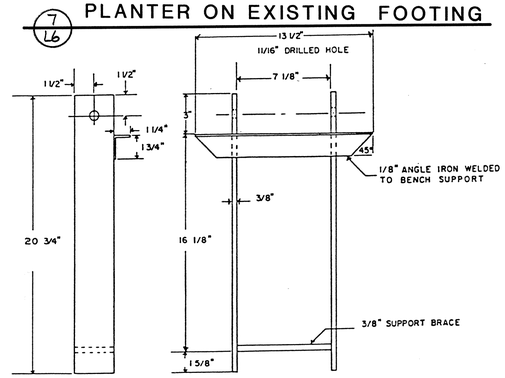

8/L6 WOOD BENCH SUPPORT

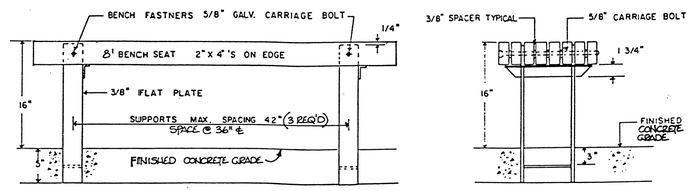

9/L6 WOOD BENCH MOUNT

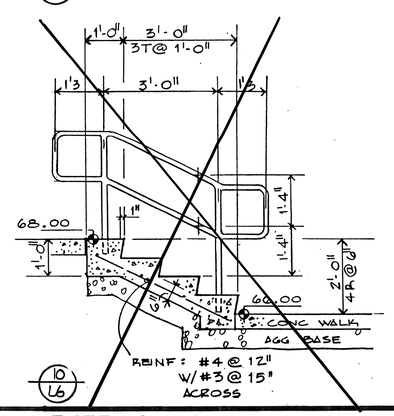

10/L6 EXTERIOR STAIR & HANDRAIL

FORM PATIOS INTO SQUARES OF 16 FEET @ EACH SIDE
THICKEN SLAB TO 8" PERIMETER & INSERT #4 REBAR CONTINUOUS

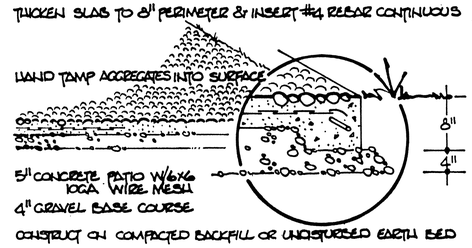

CONSTRUCT ON COMPACTED BACKFILL OR UNDISTURBED EARTH BED

4/L6 AGGREGATE CONCRETE PATIO

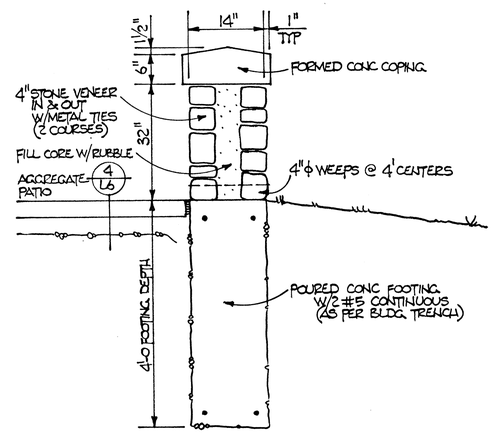

5/L6 STONE ENCLOSURE WALL

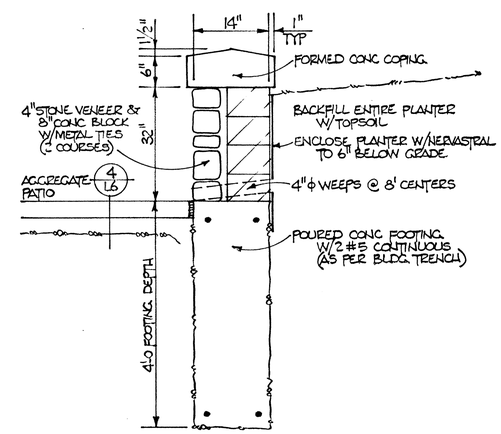

6/L6 STONE PLANTER WALL

REFER TO PAGE L3/4 FOR FIELD GRADE ELEVATIONS ϕ PER BENCH

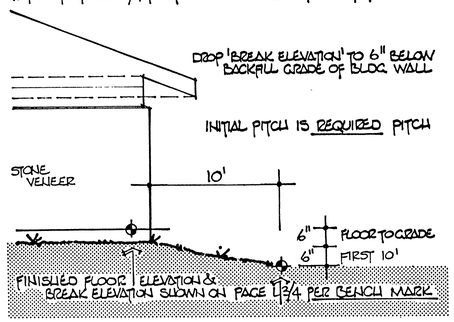

1/L6 INITIAL PITCH AT BUILDING

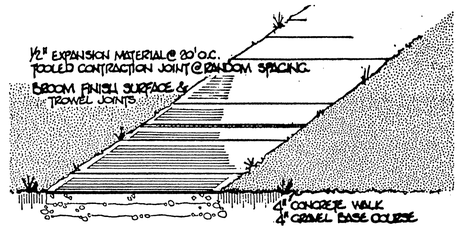

CONSTRUCT ON COMPACTED BACKFILL OR UNDISTURBED EARTH BED

2/L6 TYPICAL CONCRETE WALK

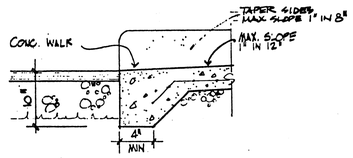

3/L6 HANDICAP RAMP DETAIL

LANDSCAPE DETAILS

0014-77-03	2.8	R: 15 JUN 88
FLOOR PLAN		A1

ROOM FINISH SCHEDULE

RM. NO	NAME	FLOOR	BASE	WALLS D MAT	WALLS D FIN	WALLS B MAT	WALLS B FIN	WALLS C MAT	WALLS C FIN	WALLS A MAT	WALLS A FIN	CEILING MAT.	CEILING HGT.	CEILING FIN	REMARKS
1	LOBBY	QT	QT	CB	5g	CB	5g	CB	5g	CB	5g	DW	9'-5"	5J	
2	JANITOR	CONC	NONE	CB	EXP	CB	EXP	CB	EXP	CB	EXP	DW	9'-5"	5J	
3	UTILITY	CONC	NONE	CB	EXP	CB	EXP	CB	EXP	CB	EXP	DW	9'-5"	5J	
4	SERVICE PIT	CONC	NONE	CONC/CB	EXP	CONC/CB	EXP	CONC/CB	EXP	CONC	EXP	DW	12'-5"	—	FLR. ELEV. 97'-0"
5	MEN	CER	CER	CB	5g	CER	—	CER	—	CER	—	DW	9'-5"	5J	
6	WOMEN	CER	CER	CER	—	CB	5g	CER	—	CER	—	DW	9'-5"	5J	
7	CORRIDOR	QT	QT	CB	5g	—	~~5g~~	CB	5g	CB	5g	DW	9'-5"	5J	
8	CORRIDOR	QT	QT	CB	5g	—	—	CB	5g	CB	5g	DW	9'-5"	5J	

QT - QUARRY TILE

CER - CERAMIC TILE

EXP - EXPOSED BLOCK

CONC - CONCRETE

CB - CONCRETE BLOCK

5g - REFERS TO PAINT SPEC.

DW - M.R. DRYWALL (THRU-OUT)

5J - SECTION 009900 p8

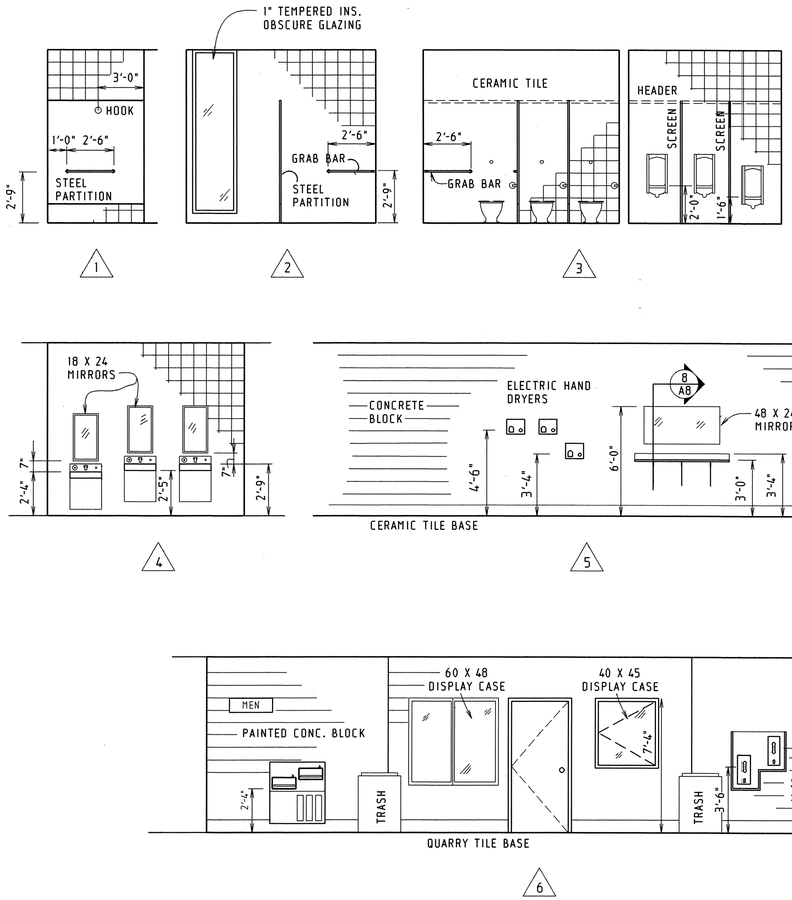

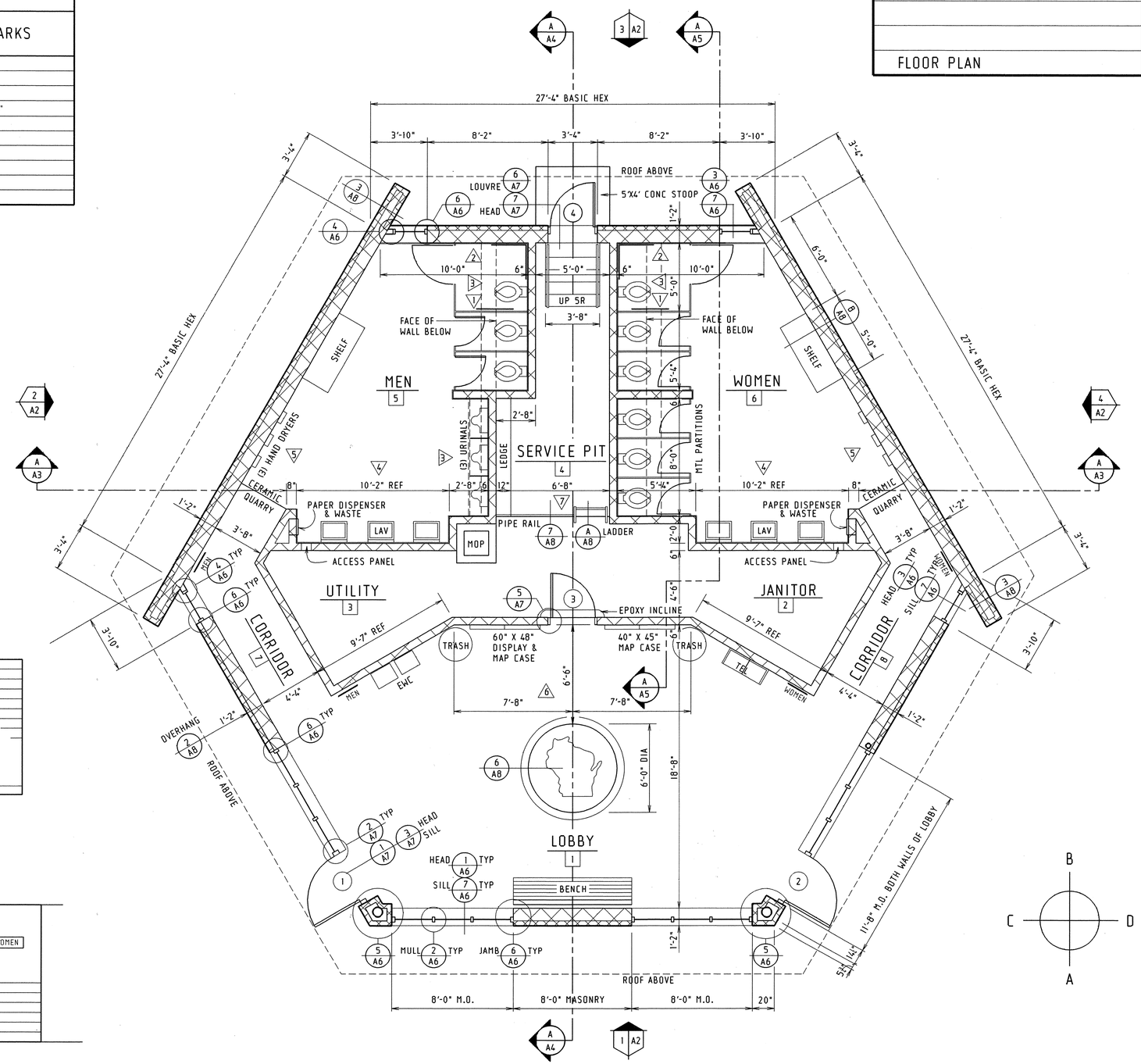

FLOOR PLAN

FLOOR AREA WITHIN BASIC HEX 1941 SF

0 2 4 6'

0014-77-03	2.9
EXTERIOR ELEVATIONS	A2

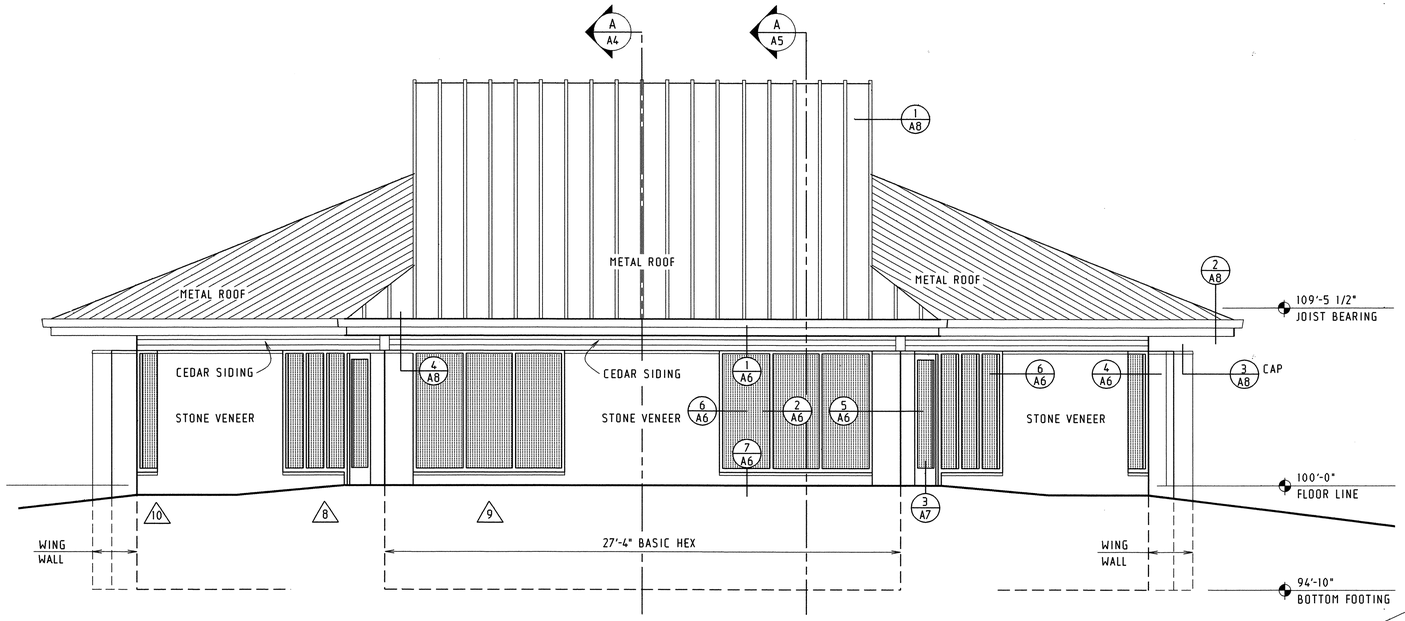

1 A2 ELEVATION
0 2 4 6'

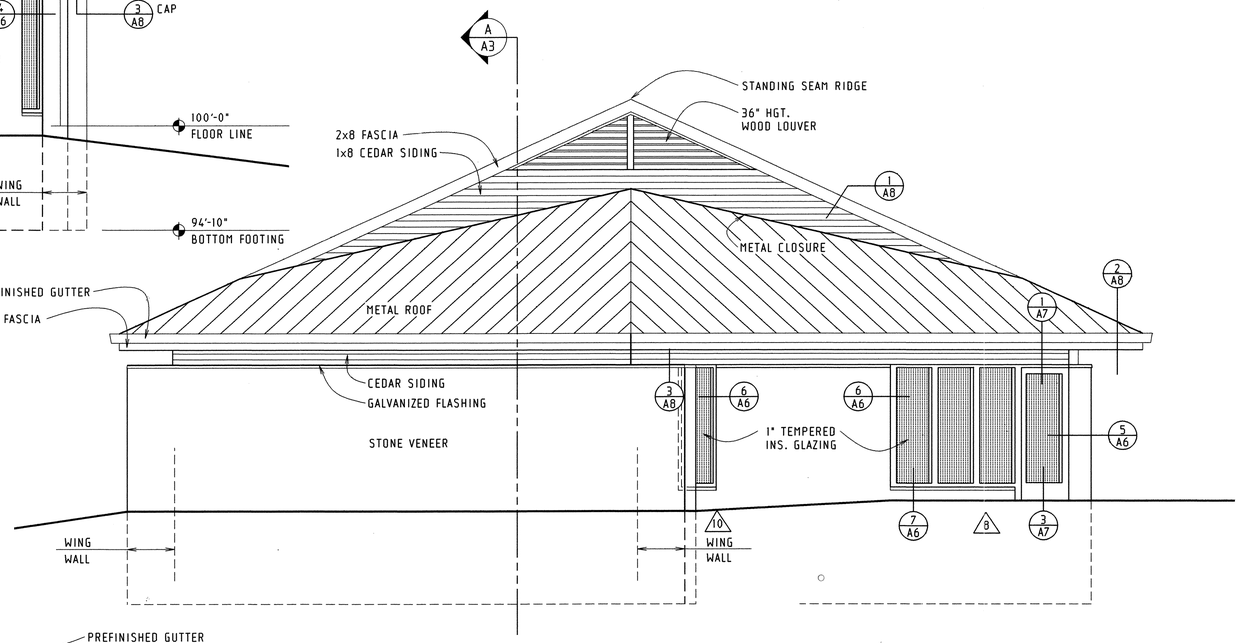

2 A2 ELEVATION
0 2 4 6'

NOTE: ELEVATION 4 IS MIRROR OPPOSITE

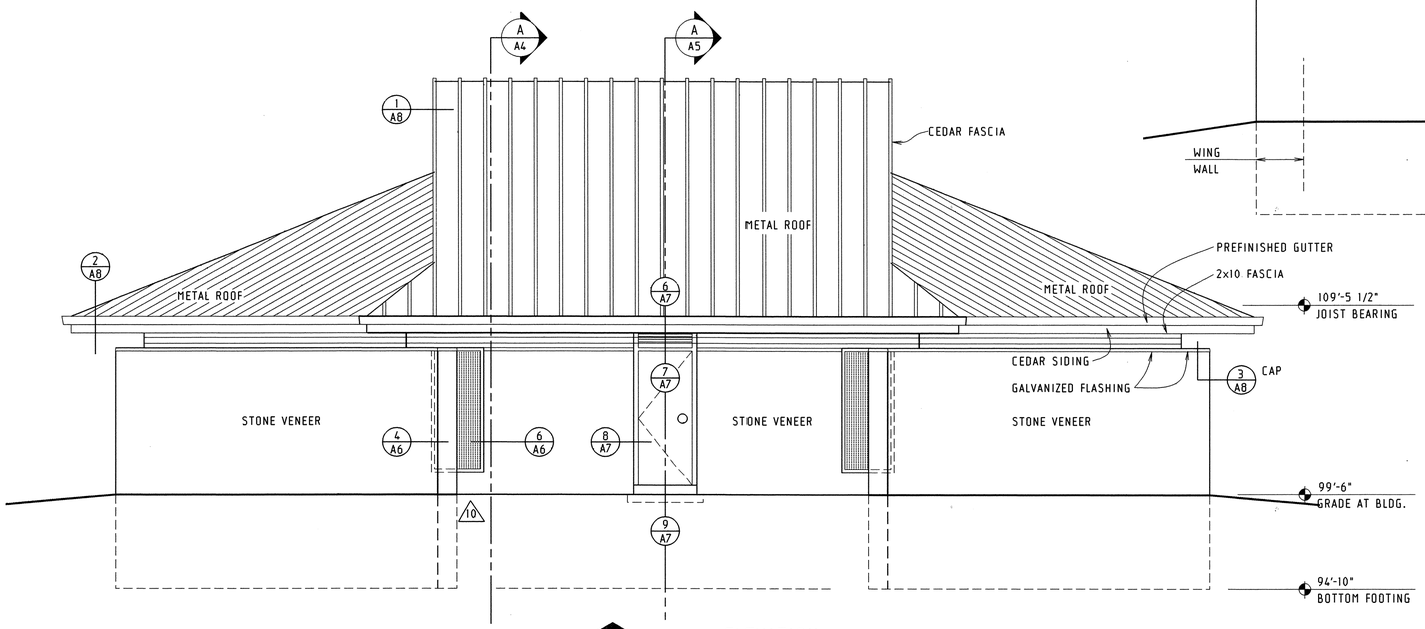

3 A2 ELEVATION
0 2 4 6'

EXTERIOR ELEVATIONS

0014-77-03	2.10
TRANSVERSE SECTION	A3

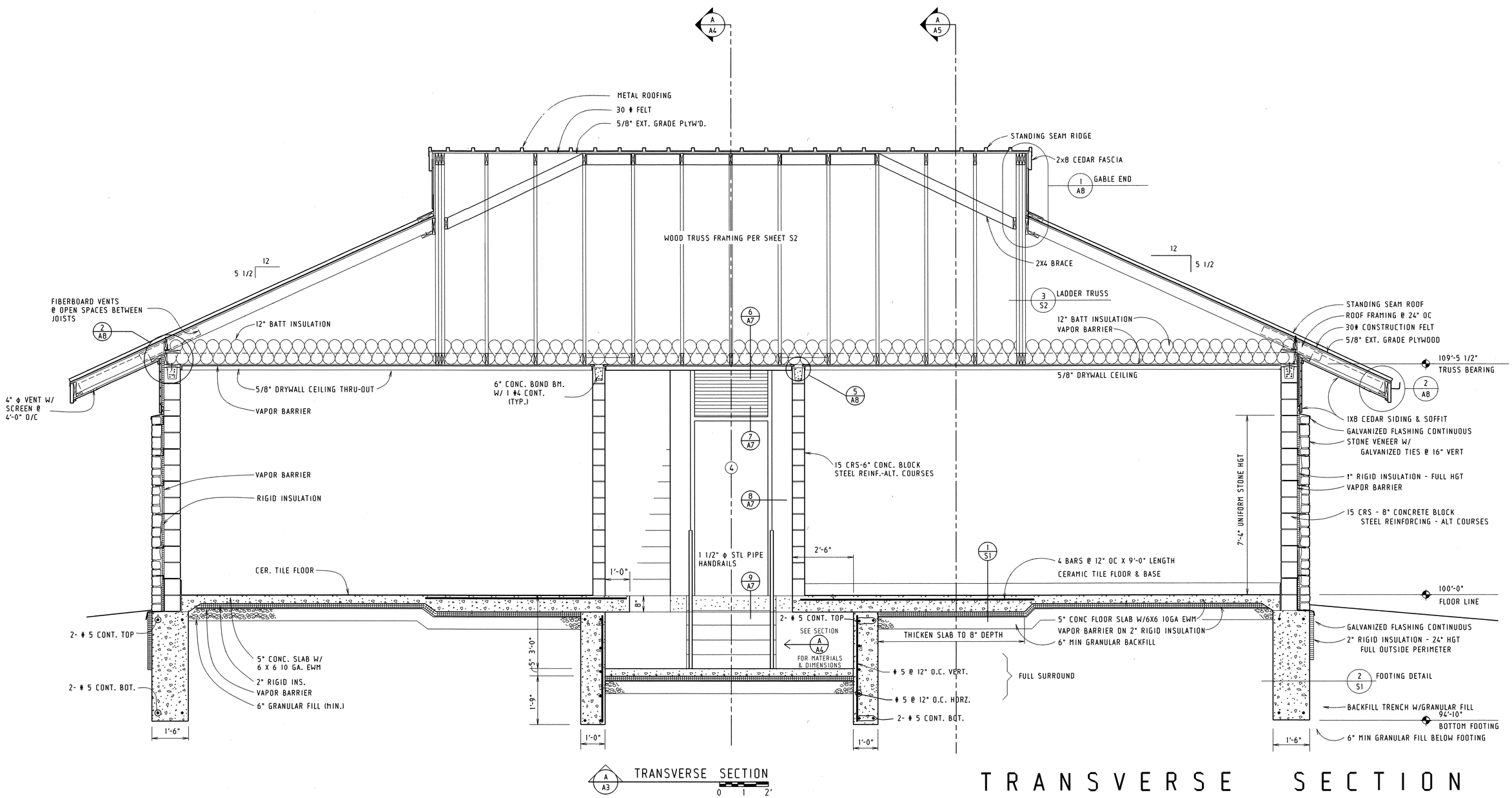

0014-77-03	2.11
LONGITUDINAL SECTION	A4

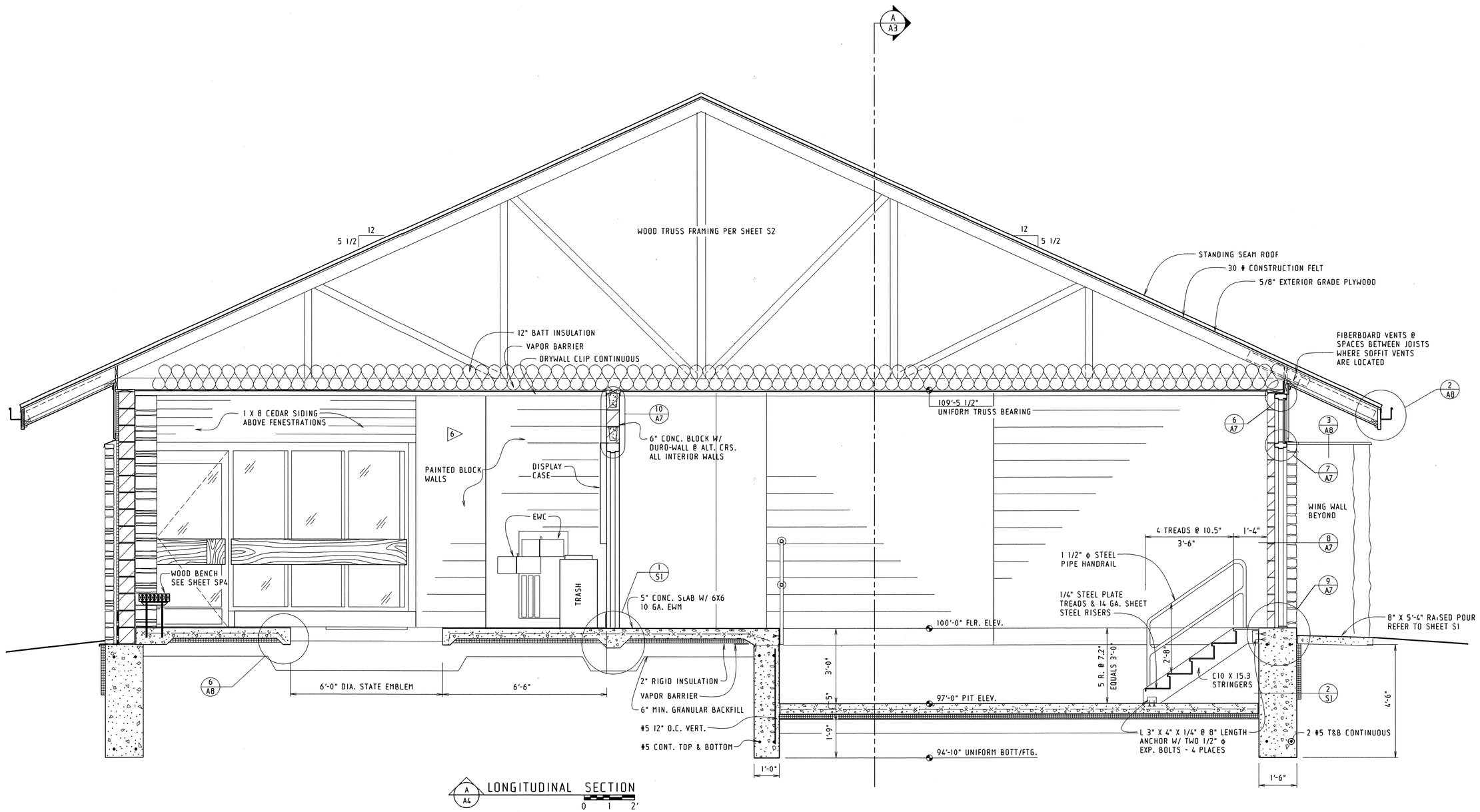

LONGITUDINAL SECTION

0014-77-03	2.12	R: 15 JUN 88
PARTIAL SECTION		A5

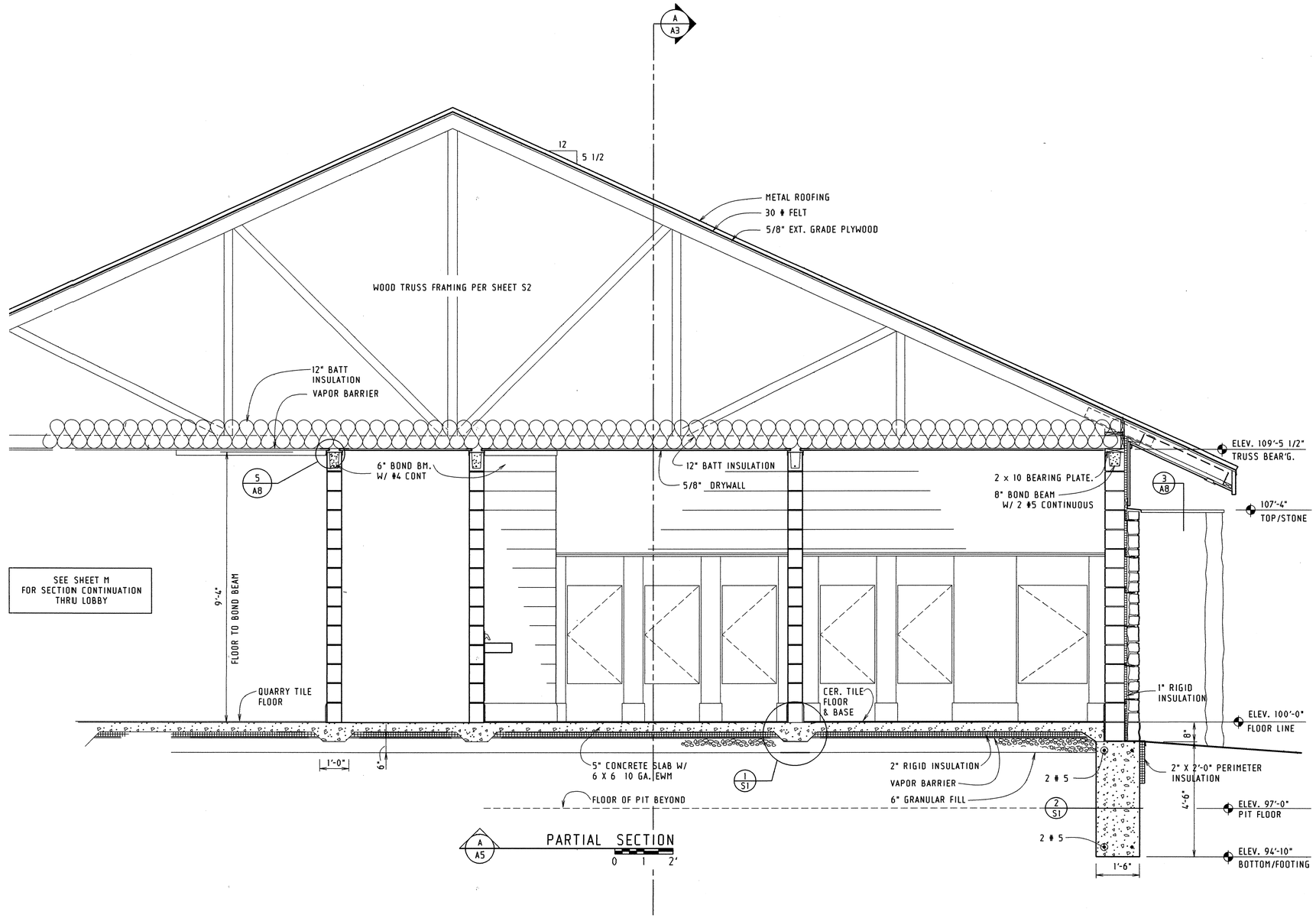

PARTIAL SECTION

0014-77-03	2.13
WINDOW DETAILS	A6

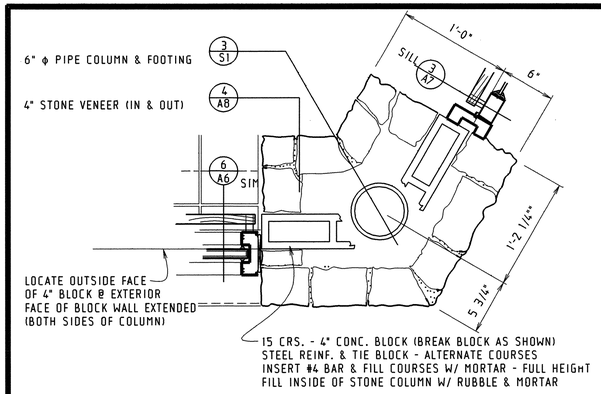

5 A6 WINDOW & DOOR JAMBS @ LOBBY

0 2 4 6"

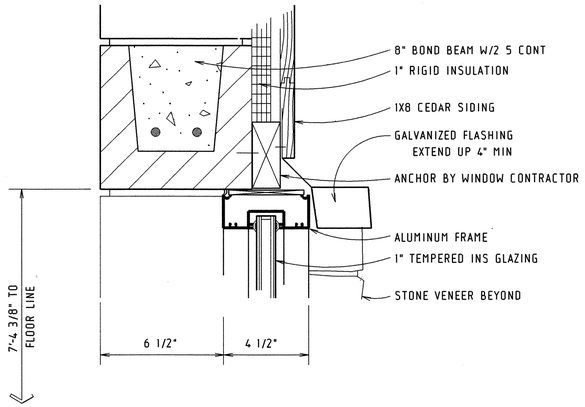

3 A6 HEAD @ CORNER WINDOW

0 2 4 6"

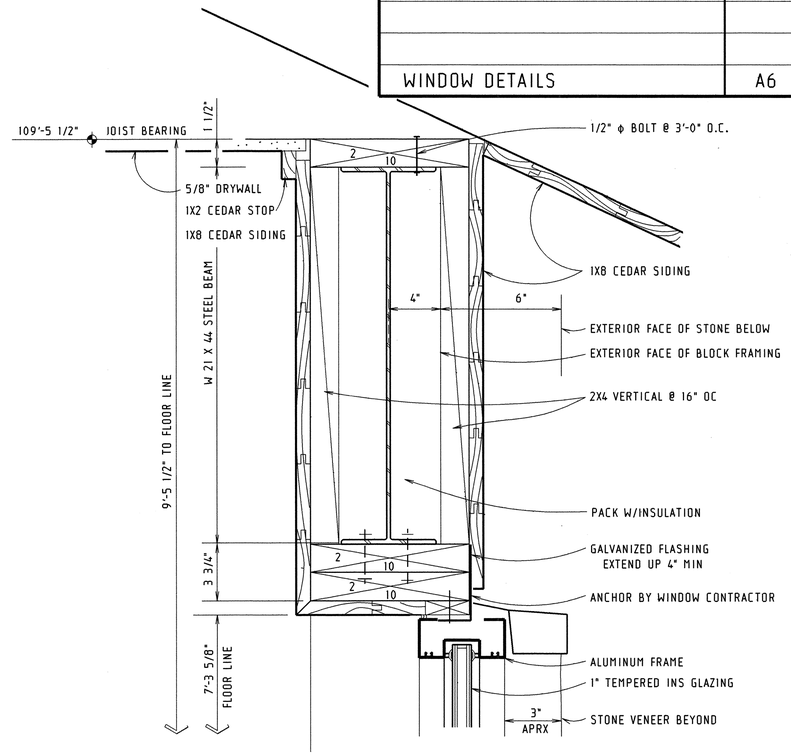

1 A6 HEAD @ LOBBY

0 2 4 6"

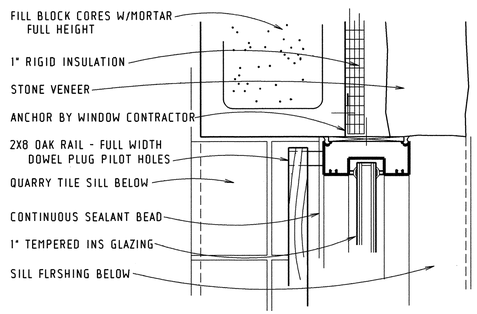

6 A6 TYPICAL JAMB DETAIL

0 2 4 6"

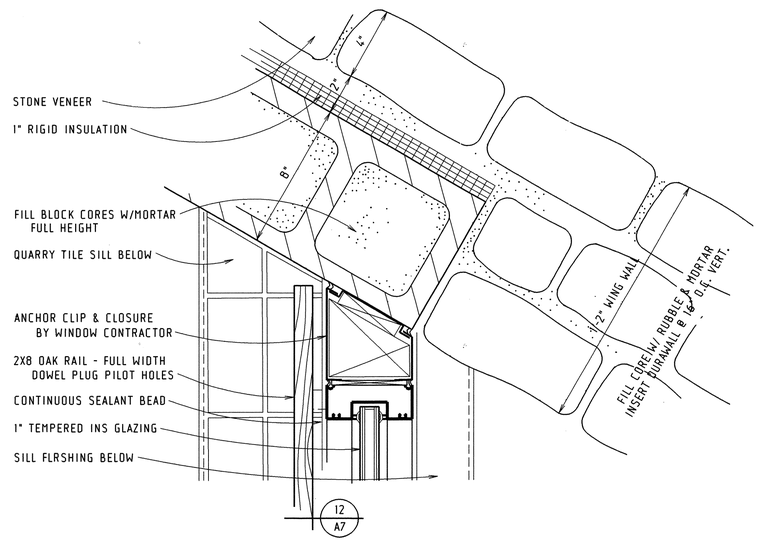

4 A6 JAMB @ CORNER WINDOW

0 2 4 6"

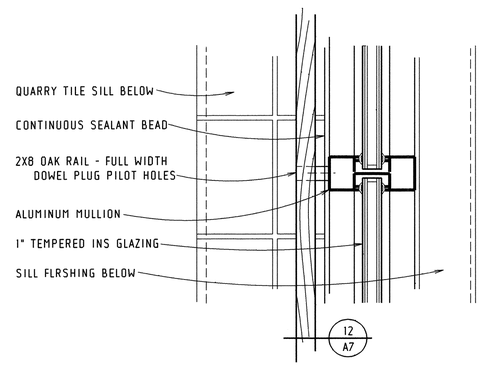

2 A6 MULLION @ LOBBY

0 2 4 6"

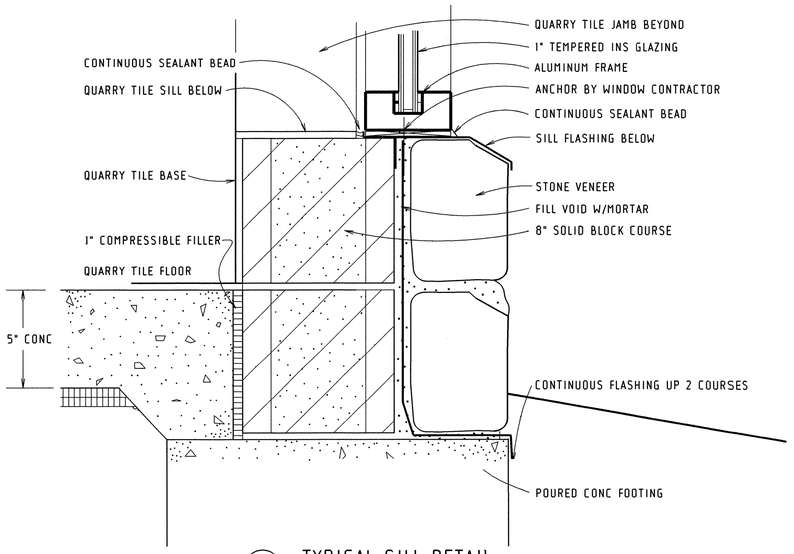

7 A6 TYPICAL SILL DETAIL

0 2 4 6"

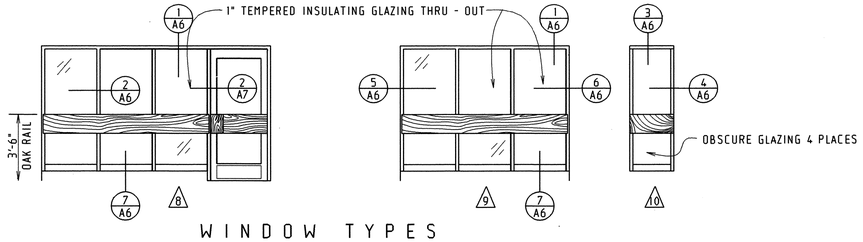

WINDOW TYPES

WINDOW DETAILS

0014-77-03	2.14	R: 15 JUN 88
DOOR SCHEDULE, DETAILS		A7

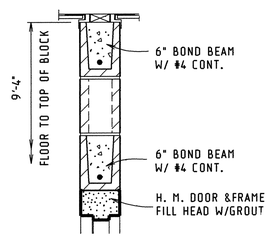

JANITOR ROOMS

10/A7 INTERIOR DOOR HEAD

0 4 8 12

11/A7 NOT ASSIGNED

0 2 4 6

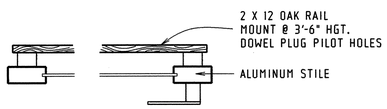

12/A7 OAK GUARDRAIL DETAIL

0 2 4 6

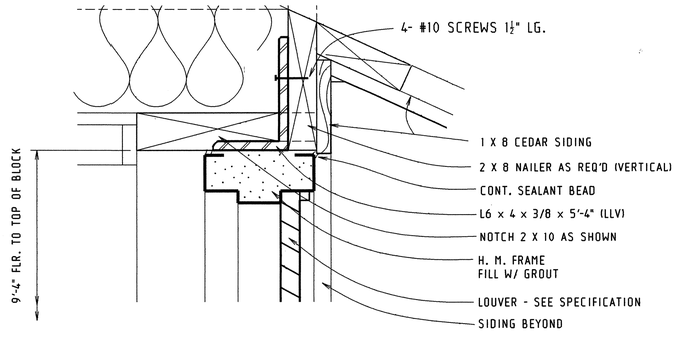

6/A7 HEAD @ REAR DOOR

0 2 4 6

6/A7 REFER ALSO

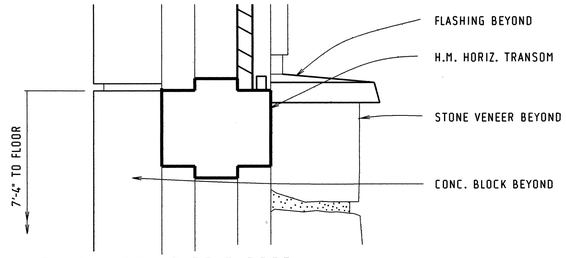

7/A7 TRANSOM @ REAR DOOR

0 2 4 6

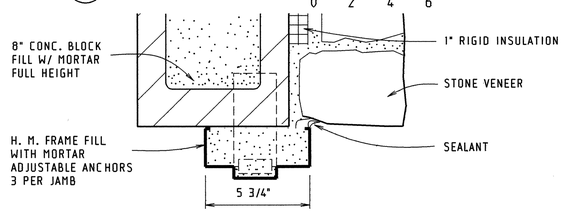

8/A7 JAMB @ REAR DOOR

0 2 4 6

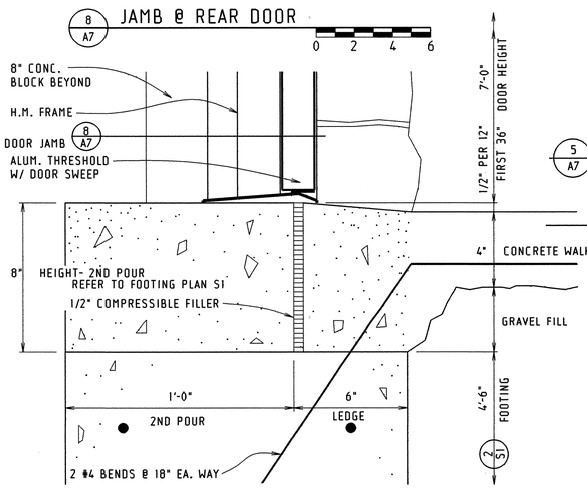

9/A7 SILL @ REAR DOOR

0 2 4 6

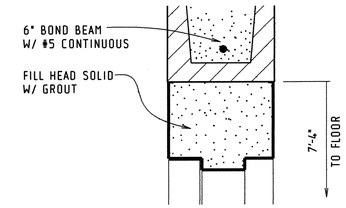

4/A7 HEAD @ INTERIOR DOOR

0 2 4 6

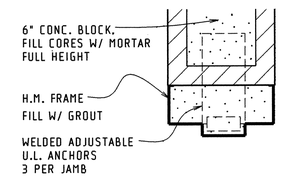

5/A7 JAMB @ INTERIOR DOOR

0 2 4 6

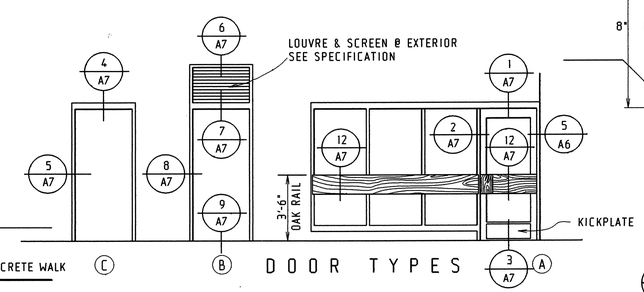

DOOR TYPES

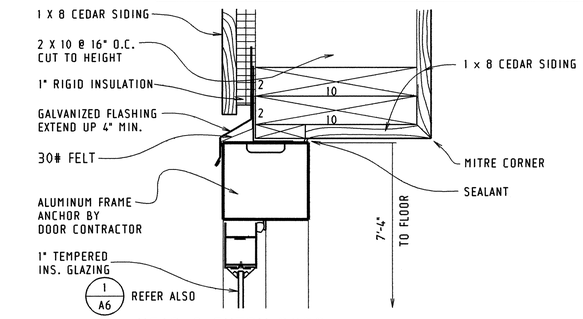

1/A6 REFER ALSO

1/A7 HEAD @ ENTRY DOOR

0 2 4 6

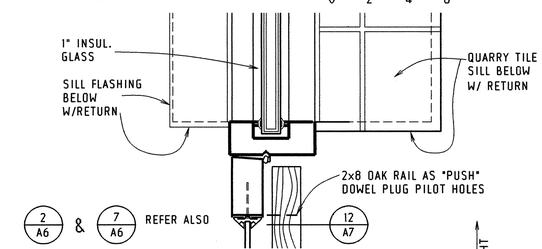

2/A6 & 7/A6 REFER ALSO

2/A7 JAMB @ ENTRY DOOR

0 2 4 6

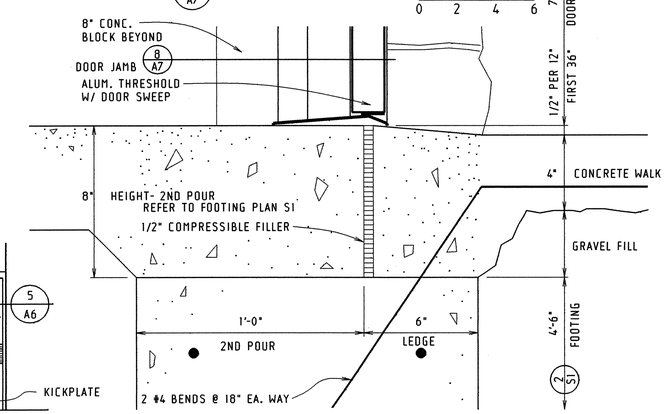

9/A7 SILL @ LOBBY DOOR

0 2 4 6

DOOR DETAILS

DOOR SCHEDULE

	DOOR					FRAME			HARDWARE	
LOCATION	NO.	SIZE	MAT.	TYPE	FINISH	MAT.	TYPE	FINISH	TYPE	REMARKS
LOBBY	1	3'-0" X 7'-0"	AL.	A	PRE	AL.	A	PRE	1	
LOBBY	2	3'-0" X 7'-0"	AL.	A	PRE	AL.	A	PRE	1	
JANITOR	3	3'-0" X 7'-0" X 1 3/4"	H.M.	C	PAINT	H.M.	C	PAINT	2	
REAR	4	3'-0" X 7'-0" X 1 3/4"	H.M.	B	PAINT	H.M.	B	PAINT	3	

0014-77-03	2.15	R: 15 JUN 88
CONSTRUCTION DETAILS		A8

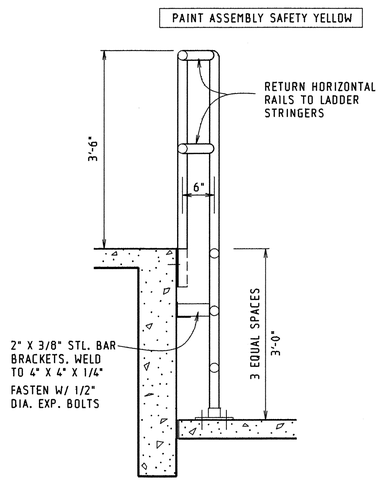

A/A8 STEEL PIPE LADDER SECTION

0 4 8 12"

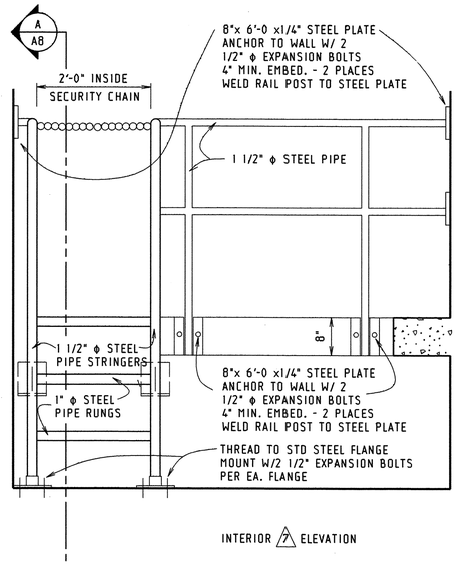

7/A8 STEEL PIPE GUARDRAIL DETAIL

0 4 8 12"

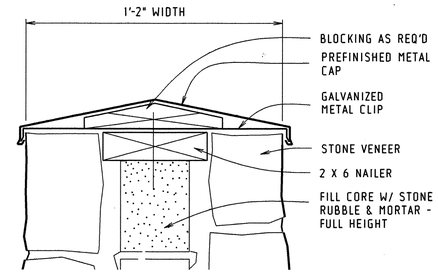

3/A8 CAP FLASHING @ WING WALL

0 2 4 6"

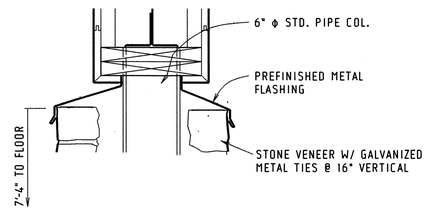

4/A8 CAP FLASHING @ COLUMN

0 2 4 6 8 10 12"

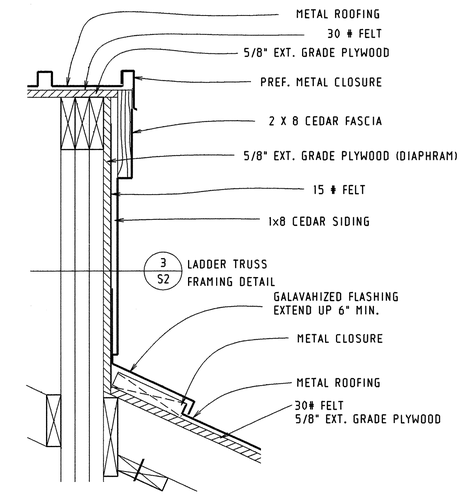

3/S2 REFER ALSO

1/A8 GABLE END DETAIL

0 2 4 6 8 10 12"

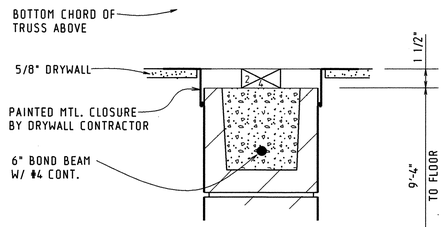

5/A8 CAP @ NON-BEARING PARTITION

0 2 4 6"

4/S2 REFER ALSO

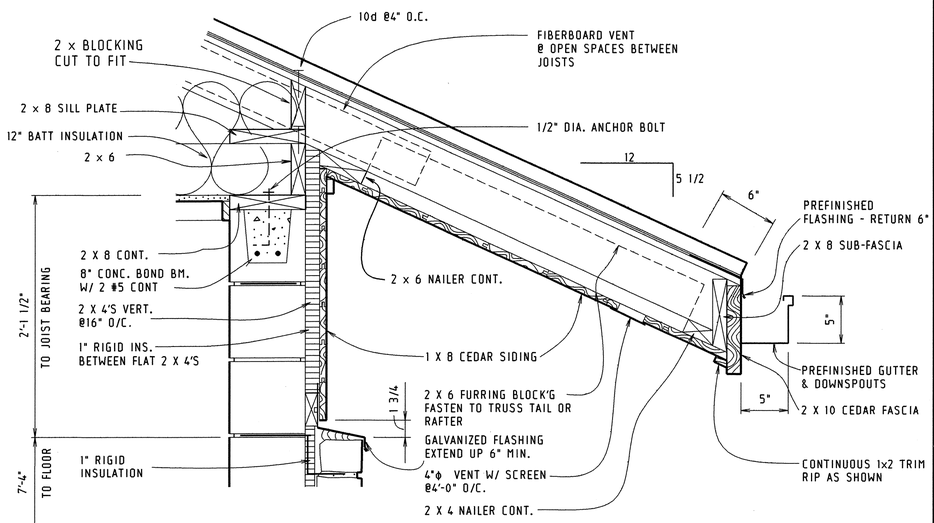

2/A8 TYPICAL ROOF OVERHANG

0 2 4 6 8 10 12"

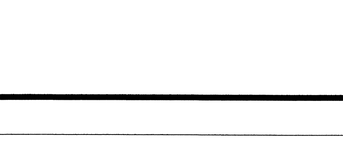

8/A8 STAINLESS STEEL SHELF DETAIL

0 4 8 12"

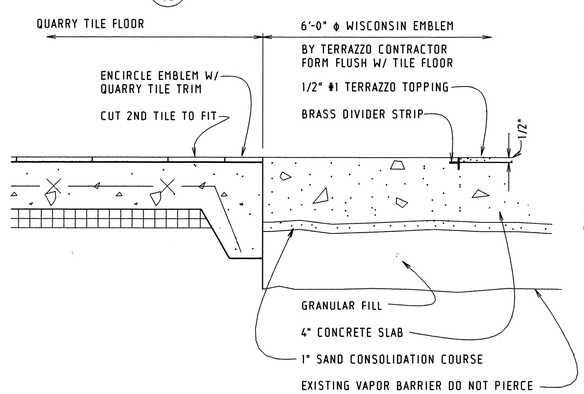

6/A8 CAST EMBLEM DETAIL

0 4 8 12"

CONSTRUCTION DETAILS

0014-77-03 2.16	R: 15 JUN 88
FOUNDATION PLAN	S1

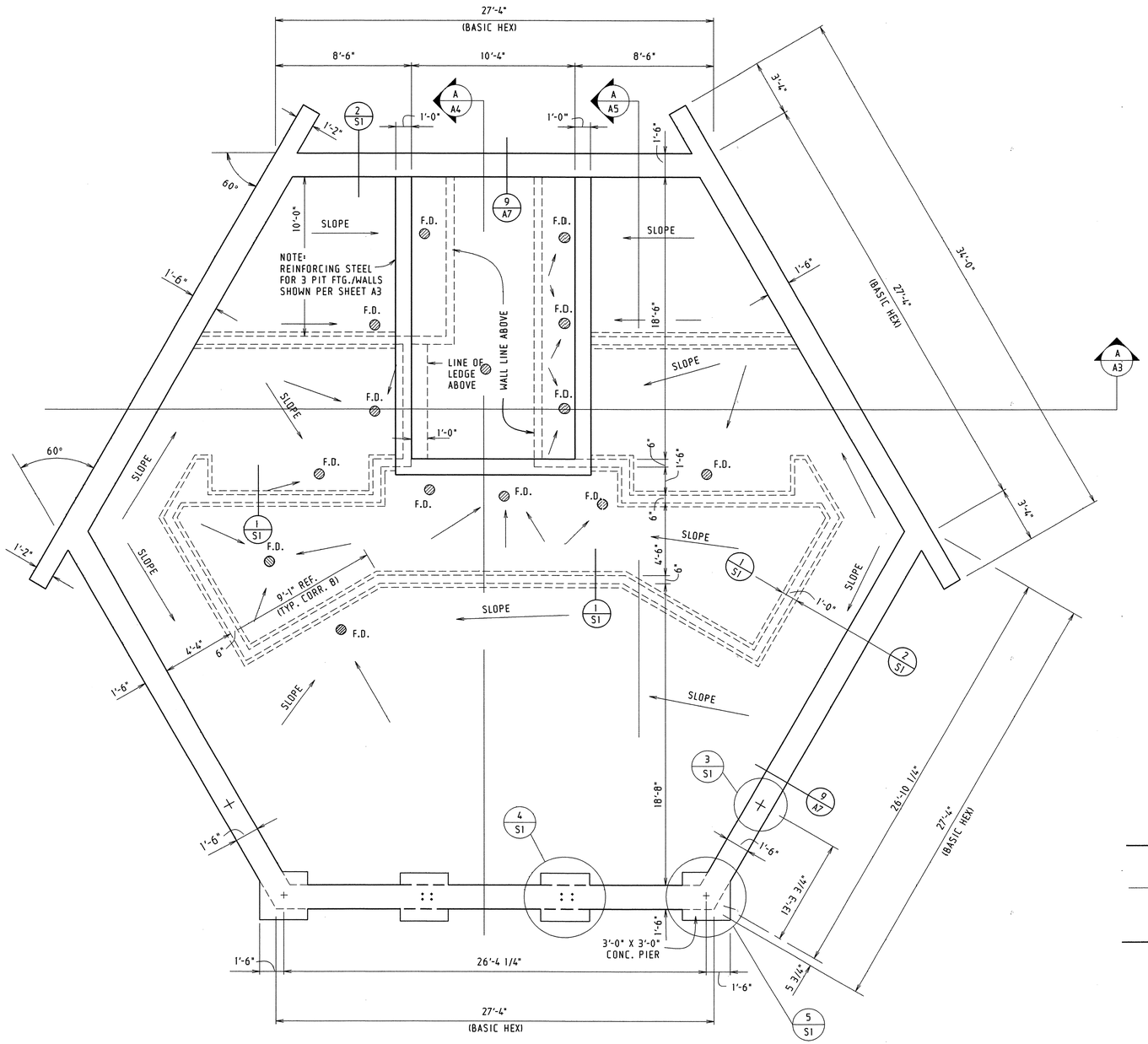

FOUNDATION PLAN

0 1 2 3 4 6

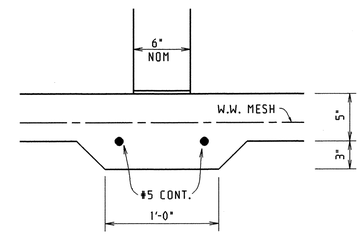

1 / S1 THICKEN SLAB BENEATH PARTITION
SCALE: 1 1/2"=1'-0"

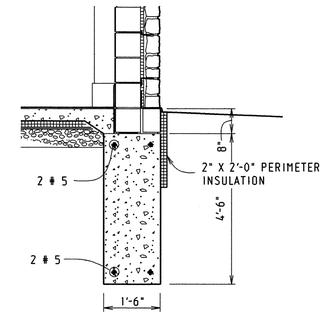

2 / S1 TYPICAL FOOTING DETAIL
SCALE: 1/2"=1'-0"

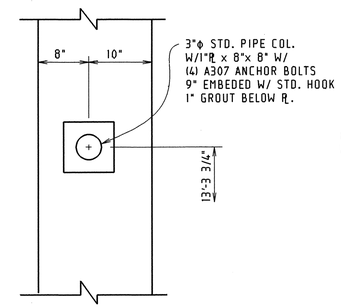

3 / S1 DETAIL
0 4 8 12 IN.

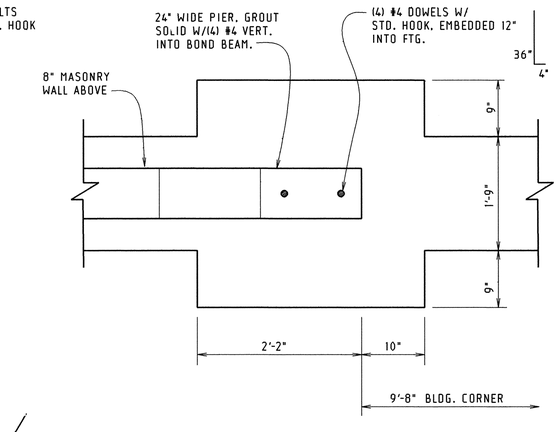

4 / S1 DETAIL
0 4 8 12 IN.

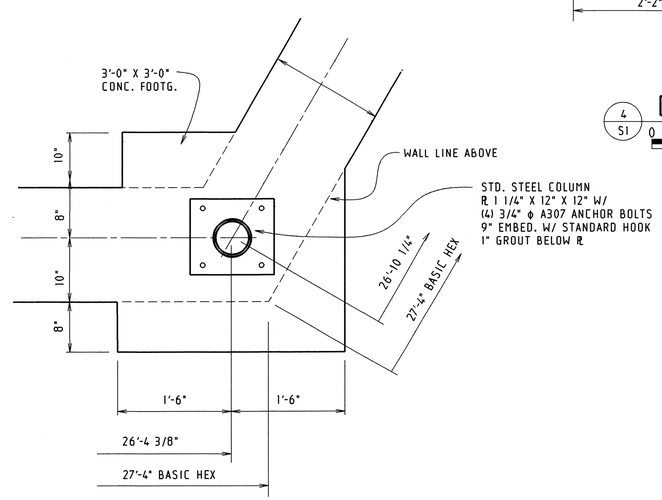

5 / S1 DETAIL
0 4 8 12 IN.

NOTES

- TOP OF FOOTING ELEVATION 99'-2"
- FLOOR ELEVATION 100'-0" U.O.N.
- FLOOR TO BE 5" CONCRETE W/ 6 X 6 10ga. W.W.M. (TYP., UNLESS NOTED ON PLAN)
- → INDICATES SLOPE OF FLOOR TO DRAINS

0014-77-03	2.17
ROOF FRAMING PLAN	S2

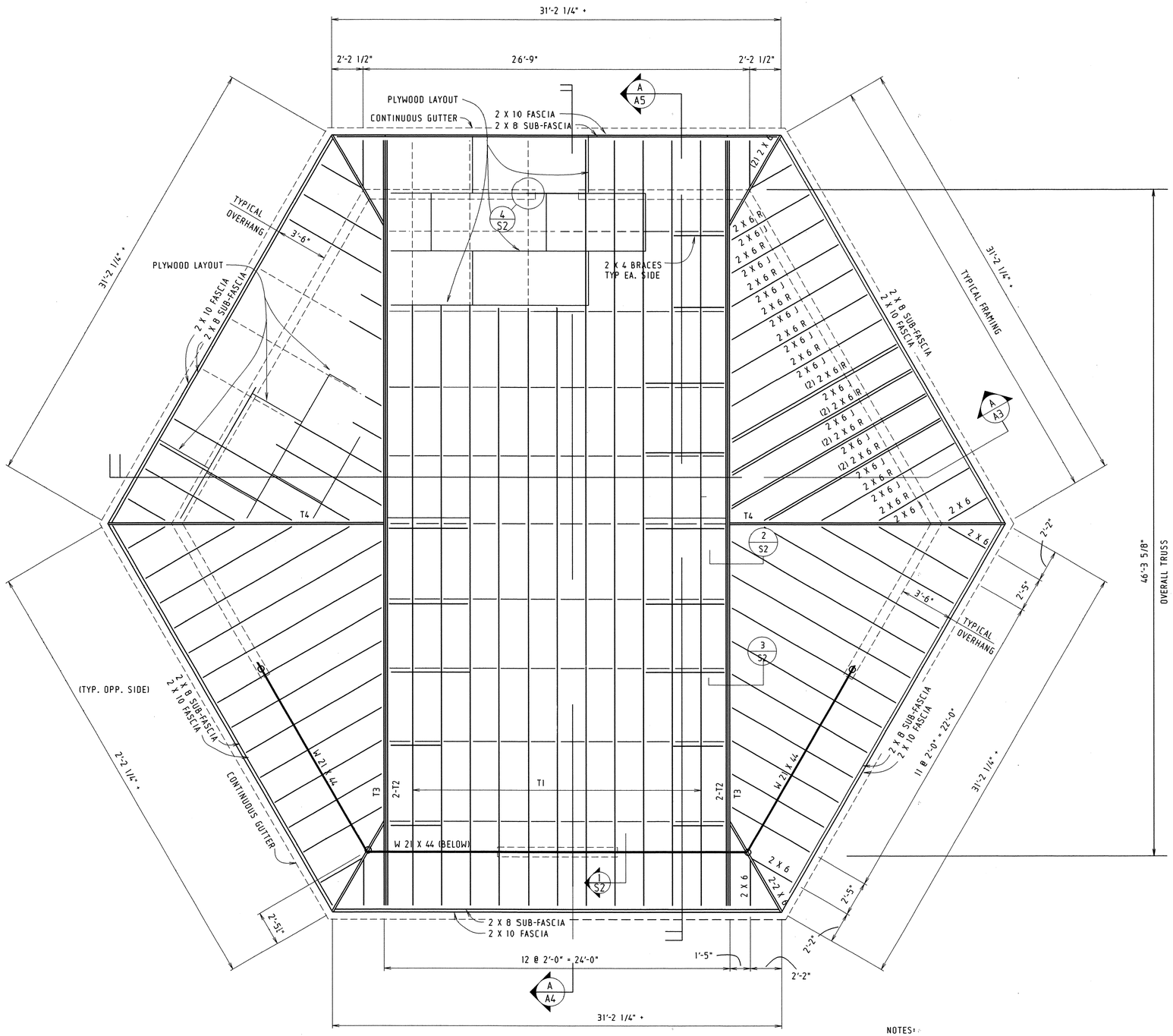

ROOF FRAMING PLAN

0 1 2 3 4 6 FT

NOTES:

- JOIST AND TRUSS BEARING ELEVATION 109'-5 1/2"
  TRUSS SUPLIER TO PROVIDE ALL ERECTION
  AND PERMANENT BRACING FOR TRUSSES

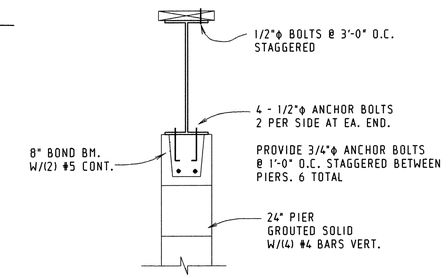

1/S2 SECTION

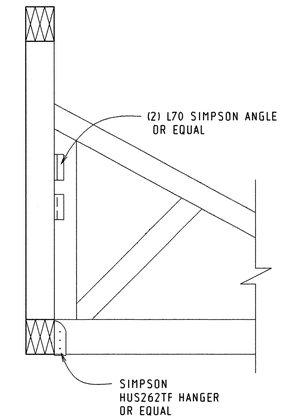

2/S2 SECTION

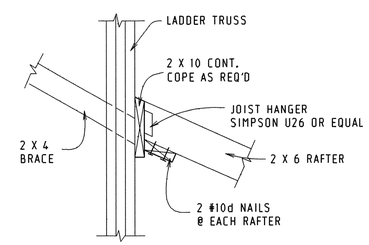

3/S2 SECTION

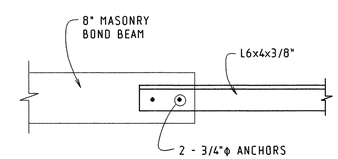

4/S2 DETAIL

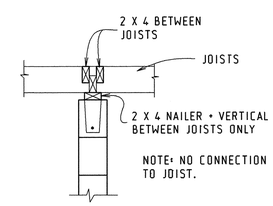

WALLS NORMAL TO JOISTS

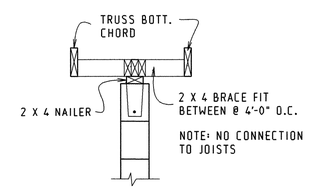

WALLS PARALLEL TO JOISTS

TOP OF INTERIOR PARTITIONS BRACING

0014-77-03	2.18
SPECIFICATIONS, GENERAL NOTES	S3

GENERAL NOTES - STRUCTURAL

- DESIGN, FABRICATION, AND ERECTION SHALL BE IN ACCORDANCE WITH THE STATE OF WISCONSIN THE ACI THE NFPA, THE NCMA, AND THE AISC BUILDING CODES AS AMENDED TO DATE.
- MINIMUM 28 DAY CONCRETE CYLINDER STRENGTH SHALL BE: 3000 PSI
- MASONRY SHALL CONFORM TO ASTM C90, MINIMUM F'_m = 1350 PSI.
- MORTER SHALL CONFORM TO ASTM C276 TYPE M OR S.
- REINFORCING STEEL SHALL CONFORM TO ASTM A615 GRADE 60, INCLUDING SUPPLEMENT S1.
- STRUCTURAL STEEL SHALL CONFORM TO ASTM A36.
- STRUCTURAL TUBING SHALL CONFORM TO ASTM A500, GRADE B, Fy=46KSI.
- WOOD SHALL BE DOUGLAS FIR MEETING THE FOLLOWING MINIMUM DESIGN VALUES: GRADE 2, F_b = 1250 PSI, F_b = 1450 PSI (REP.), F_t = 650 PSI, F_v = 95 PSI, F_c = 1050 PSI, E =1,700,000 PSI.
- ASSUMED BEARING CAPACITY OF SOIL IS 2500 PSF.
- DESIGN LIVE LOADS:

FLOORS	50 PSF
ROOF	40 PSF, PLUS DRIFTING SNOW PROVISIONS
STAIRS	100 PSF
WIND	20 PSF PLUS UPLIFT

MASONRY

- ALL CONCRETE MASONRY SHALL CONFORM TO THE NATIONAL CONCRETE MASONRY ASSOCIATION SPECIFICATIONS FOR DESIGN AND CONSTRUCTION OF LOAD BEARING CONCRETE MASONRY, LATEST EDITION.
- MASONRY INSPECTION AS DEFINED BY THE REFERENCED STANDARDS IS REQUIRED FOR FRONT WALL ONLY.
- MASONRY WALLS SHALL BE BRACED TO WITHSTAND A MINIMUM HORIZONTAL LOAD OF 20 PSF DURING THEIR ERECTION AND UNTIL THEIR DESIGN SUPPORTS ARE IN PLACE.
- ALL MASONRY ASSUMED LIGHTWEIGHT.
- CALCIUM CHLORIDE AND/OR ADMIXTURES CONTAINING SAME SHALL NOT BE INCLUDED IN MORTER OR GROUT MIXES.
- NO EXTERIOR MASONRY SHALL BE LAID WHEN OUTSIDE AIR TEMPERATURE IS LESS THAN 40° F UNLESS RECOMMENDATIONS SPECIFIED BY THE INTERNATIONAL MASONRY INDUSTRY ALL WEATHER COUNCIL ARE STRICTLY FOLLOWED.

WOOD WORK

- ROOF PLYWOOD SHALL BE: 5/8 RATED SHEATHING (C-D) 48/24 EXP. 1.
- NAILING OF ROOF PLYWOOD SHALL BE 8d @ 6" O.C. AT ALL PANEL ENDS, AND BOUNDARIES, AND 8d @ 10" O.C. @ INTERMEDIATE FRAMING MEMBERS NAILING INTO THE WOOD NAILERS ABOVE STEEL BEAMS OR MASONRY WALLS SHALL BE 10d @ 6" O.C.
- WALL PLYWOOD SHALL BE 5/8 RATED SHEATHING (C-D) EXP. 1.
- NAILING OF WALL PLYWOOD SHALL BE 8d @ 6" O.C. AT PANEL EDGES AND 8d @ 12" O. UNLESS NOTED OTHERWISE.C. @ INTERMEDIATE FRAMING MEMBERS.
- ROOF TRUSS ANCHORAGE: ALL ROOF TRUSSES SHALL BE SECURED TO THE TOP PLATE OR THE STUD WALL OR WOOD NAILER WITH SIMPSON MANUFACTURE TYPE "A35" CONNECTORS, TWO (2) PER EACH TRUSS END, OR AN APPROVED EQUAL. NAIL EACH "A35" CONNECTOR WITH 6-N8 NAILS (8d X 1-1/4").
- SIDING NAILS SHALL BE HOT DIPPED GALVANIZED.

MINIMUM NAILING SCHEDULE

CONNECTION	NAILING (USING COMMON NAILS)
TOP PLATE TO STUD, END NAIL	2-16d
STUD TO SOIL PLATE	4-8, TOENAIL
DOUBLE STUDS, FACE NAIL	16d AT 24" O.C.
DOUBLE TOP PLATES, FACE NAIL	16d AT 16" O.C.
TOP PLATES, LAPS AND INTERSECTION, FACE NAIL	2-16d
CONTINUOUS HEADER, TWO PIECES	16d AT 16" O.C. ALONG EACH EDGE
CONTINUOUS HEADER TO STUD, TOENAIL	4-8d
CEILING JOISTS TO PARALLEL RAFTERS, FACE NAIL	3-16d
RAFTER TO PLATE, TOENAIL	3-8d
SIDING	6-d

CONCRETE AND EARTHWORK

- REINFORCING STEEL SHALL BE DETAILED AND PLACED IN ACCORDANCE WITH THE ACI MANUAL OF STANDARD PRACTICE UNLESS OTHERWISE NOTED.
- FOUNDATION SHALL BE CAST ON UNDISTURBED SUBSOIL. IF DESIGN CAPACITY IS NOT ENCOUNTERED AT THE ELEVATIONS SHOWN, FOUNDATION MUST BE LOWERED. CONSULT ENGINEER BEFORE PROCEEDING.
- NO HOLES, TRENCHES OR DISTURBANCES OF THE SOIL SHALL BE ALLOWED WITHIN THE VOLUMNE DESCRIBED BY 45° LINES SLOPING FROM FOOTINGS THE BOTTOM EDGE OF THE FOOTING. IF SUCH ARE REQUIRED, FOOTINGS MUST BE LOWERED.
- LAP ALL WALL SPLICES 40 DIAMETERS. LAP WELDED WIRE MESH 6 INCHES.
- PROVIDE 3'-0" X 3'-0" CORNER BARS OF THE SAME SIZE AND NUMBER AS THE EXTERIOR HORIZONTAL WALL REINFORCING UNLESS OTHERWISE DETAILED.
- PROVIDE FOR EACH LAYER OF WALL OR SLAB STEEL, TWO (2) 5 BARS AROUND ALL OPENINGS AND TWO (2) 5 BARS DIAGONALLY AT ALL OPENING CORNERS, UNLESS OTHERWISE SPECIFIED.
- CONCRETE PROTECTION FOR REINFORCING BARS TO BE AS FOLLOWS:

FOOTINGS	3"
WALLS	2"
SLABS	1-1/2"

- TOPSOIL OR FILL BELOW SLABS ON GRADE SHALL BE REMOVED. BACKFILL UNDER SLABS AND AGAINST WALLS SHALL BE BANKRUN GRAVEL COMPACTED IN 6" LAYERS EXCEPT WHERE LOOSE FILL IS INDICATED ON PLANS. SLABS ON GRADE SHALL BE CAST ON AT LEAST 6" OF COMPACTED GRAVEL.
- SLABS ON GRADE SHALL BE 5" THICK AND REINFORCED WITH 6 X 6 (6/6) WELDED WIRE MESH. UNLESS OTHERWISE NOTED.
- CONTRACTOR SHALL NOTIFY THE ENGINEER AT LEAST 24 HOURS PRIOR TO PLACING CONCRETE.
- EXTERIOR EXPOSED CONCRETE SHALL BE AIR-ENTRAINED. MINIMUM AIR CONTENT SHALL BE 6%.
- ELECTRICAL CONDUIT AND PIPES EMBEDDED IN OR PASSING THROUGH FLOORS, WALLS OR BEAMS SHALL BE LOCATED AND PLACED SO THAT:

  1. THEY ARE NOT CLOSER THAN THREE DIAMETERS ON CENTER.
  2. THE CONCRETE COVER IS NOT LESS THAN ONE INCH.

STEEL WORK

- FABRICATION AND ERECTION OF STRUCTURAL AND MISCELLANEOUS STEEL SHALL CONFORM TOTHE AISC CODE OF STANDARD PRACTICE UNLESS OTHERWISE DETAILED.
- BOLTED CONNECTIONS SHALL BE MADE WITH A-325 HIGH STRENGTH BOLTS. CONNECTIONS SHALL SUPPORT, AS A MINIMUM, ONE-HALF THE TOTAL UNIFORM CAPACITY SHOWN IN THE AISC TABLES OF UNIFORM LOAD CONSTANTS FOR THE GIVEN BEAM, SPAN, AND STEEL SPECIFIED, UNLESS OTHERWISE DETAILED. BEAM TO BEAM AND BEAM TO COLUMN FRAMING CONNECTIONS SHALL BE MADE WITH DOUBLE ANGLES UNLESS OTHERWISE DETAILED.
- COLUMNS BASE PLATES WITH OVERSIZE HOLES SHALL HAVE PLATE WASHERS PROVIDED WITH ANCHOR BOLTS.

WOOD TRUSSES

- TRUSS MANUFACTURER SHALL DESIGN TRUSSES FOR LOADS SHOWN PLUS MECHANICAL UNITS AS SHOWN ON HVAC DRAWINGS.
- CONTRACTOR SHALL PROVIDE TRUSS BRACING AS RECOMMENDED BY TRUSS MANUFACTURER.

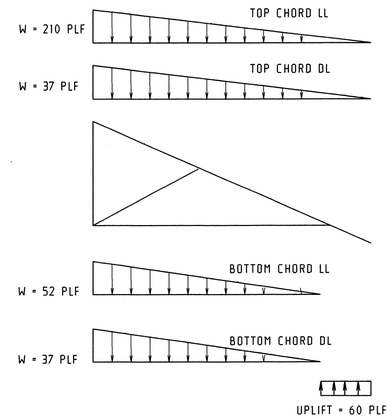

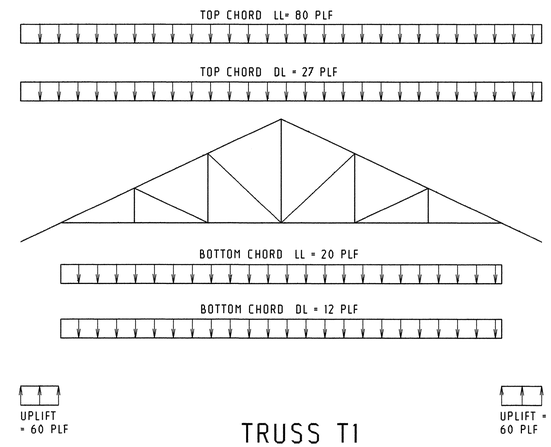

TRUSS T1

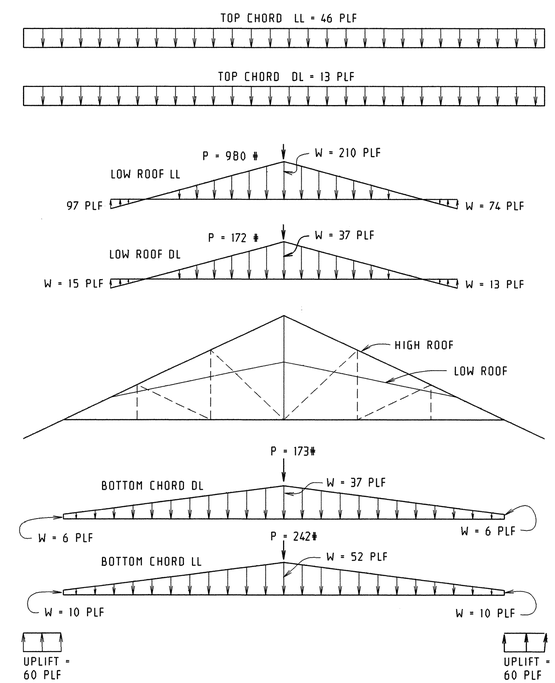

TRUSSES T3 + (2) T2

0014-77-03	2.19
FOUNDATION PLUMBING PLAN	P1

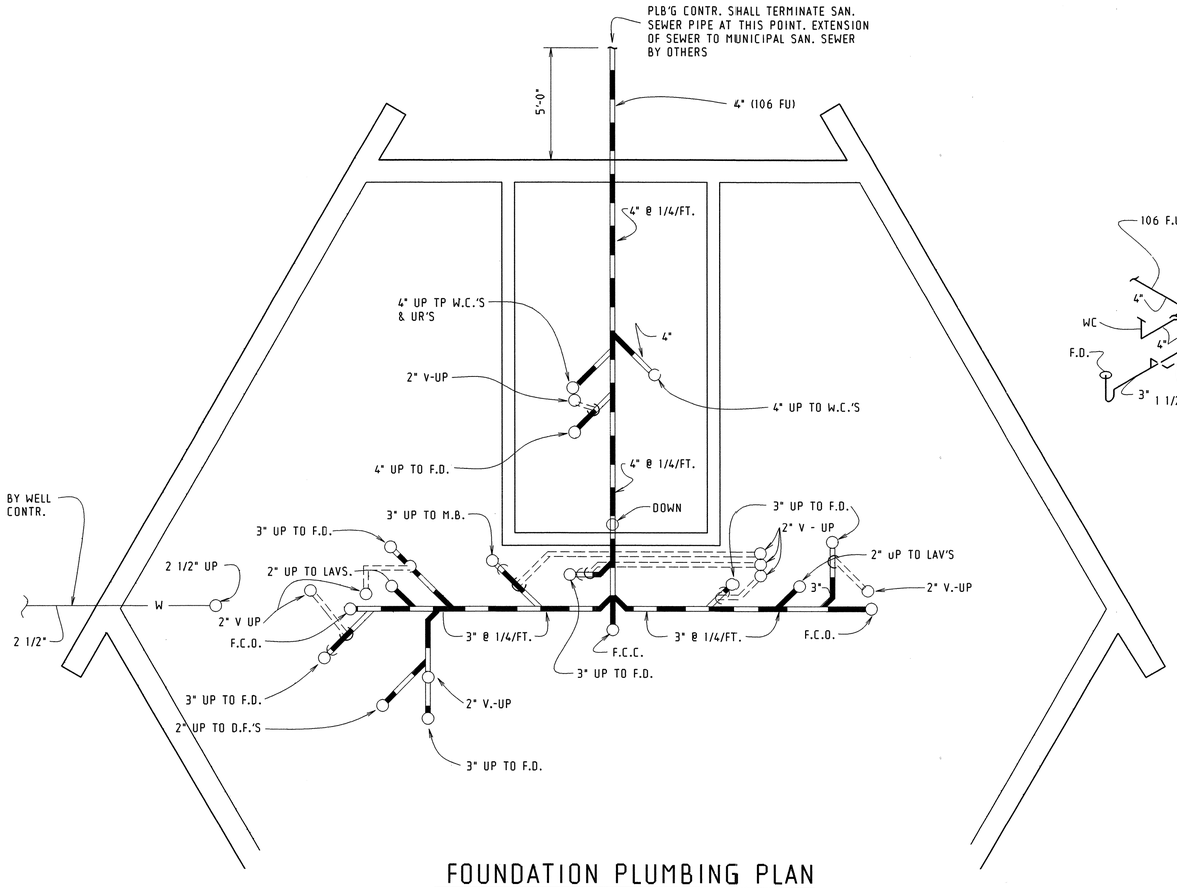

FOUNDATION PLUMBING PLAN

0 1 2 3 4 6 FT

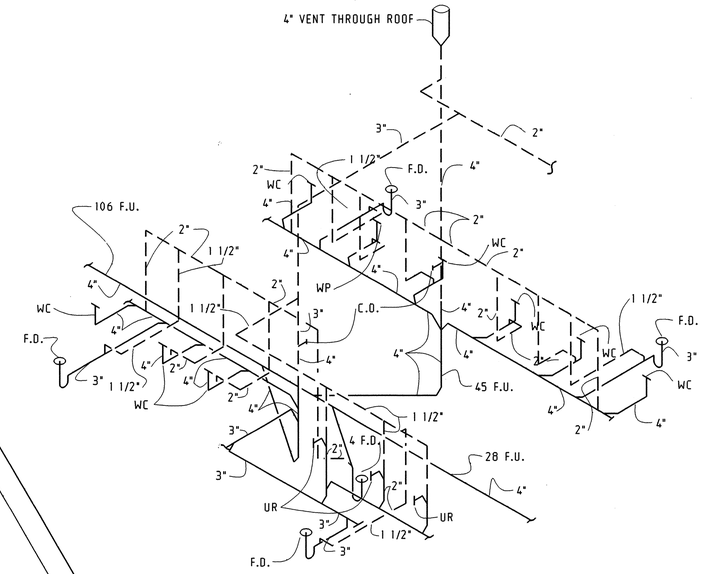

1 PIPING ISOMETRIC - WASTE

NO SCALE

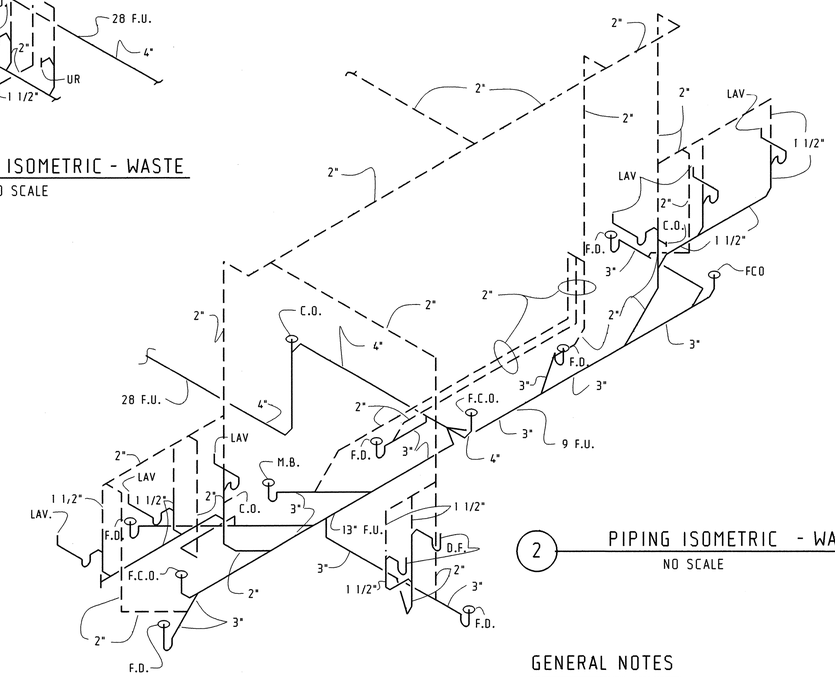

2 PIPING ISOMETRIC - WASTE

NO SCALE

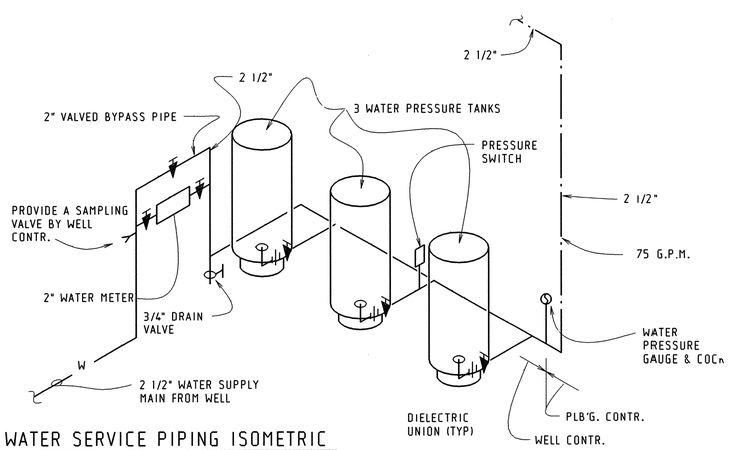

3 WATER SERVICE PIPING ISOMETRIC

NO SCALE

GENERAL NOTES

1. ALL BELOW GRADE WATER SUPPLY PIPING IS SIZED FOR TYPE K COPPER.
2. ALL BUILDING WATER SUPPLY PIPING IS SIZED FOR TYPE L COPPER.
3. PROVIDE A SHUT-OFF VALVE FOR EACH INDIVIDUAL FIXTURE SUPPLY.
4. MAXIMUM PEAK FLOW OF THE WATER SUPPLY IS 75 GPM
5. RUN THE SANITARY BUILDING SEWERS AT 1/4"/FT. SLOPE
6. SEE HIGHWAY SITE PLANS FOR ADDITIONAL INFORMATION AND WORK.
7. WELL PUMP CUT IN 40 PSI CUT OUT 60 PSI.

INSULATE WATER SUPPLY LINE FOAM RUBBER

FIXTURE CONNECTION SCHEDULE

SYMBOL	DESCRIPTION	PIPE SIZE (INCHES DIA.) C.W.	H.W.	WASTE	VENT	REMARKS
P-1 & P-2	WATER CLOSET'S	1 1/4"	—	4"	2"	
P-3 & P-4	URINAL'S	3/4"	—	2"	1 1/2"	
P-5	LAVATORY	3/8"	3/8"	1 1/2"	1 1/2"	
P-6	LAVATORY	3/8"	3/8"	1 1/2"	1 1/2"	
P-7	DRINKING FOUNTAIN	3/8"	—	1 1/2"	1 1/2"	
P-8	MOP BASIN	1/2"	1/2"	3"	2"	
P-9	INSIDE HOSE BIB	3/4"	—	—	—	
P-10	OUTSIDE HOSE BIB	3/4"	—	—	—	

WATER HEATER SCHEDULE

SYMBOL	MANUFACTURER MODEL NO.	STORAGE GALS CAP	FUEL TYPE	INPUT K.W.	RECOVERY GPH AT 100°RISE
WH-1	STATE	52	ELEC.	4.5 UPPER & LOWER	19

WATER SOFTENER SCHEDULE

MFG. MODEL NO.	SOFTENER GRAINS EXG CAP	CU. FT. RESIN	MAX PSI LOSS	GPM	MAX TANK DIM	BRINE TANK LBS SALT CAP	MAX TANK DIM
BRUNER 60-BA-1 1/4"	60.000	2.0	8	9	12" X 54"	375	22" X 36"

0014-77-03	2.20	R: 15 JUN 88
PLUMBING FLOOR PLAN		P2

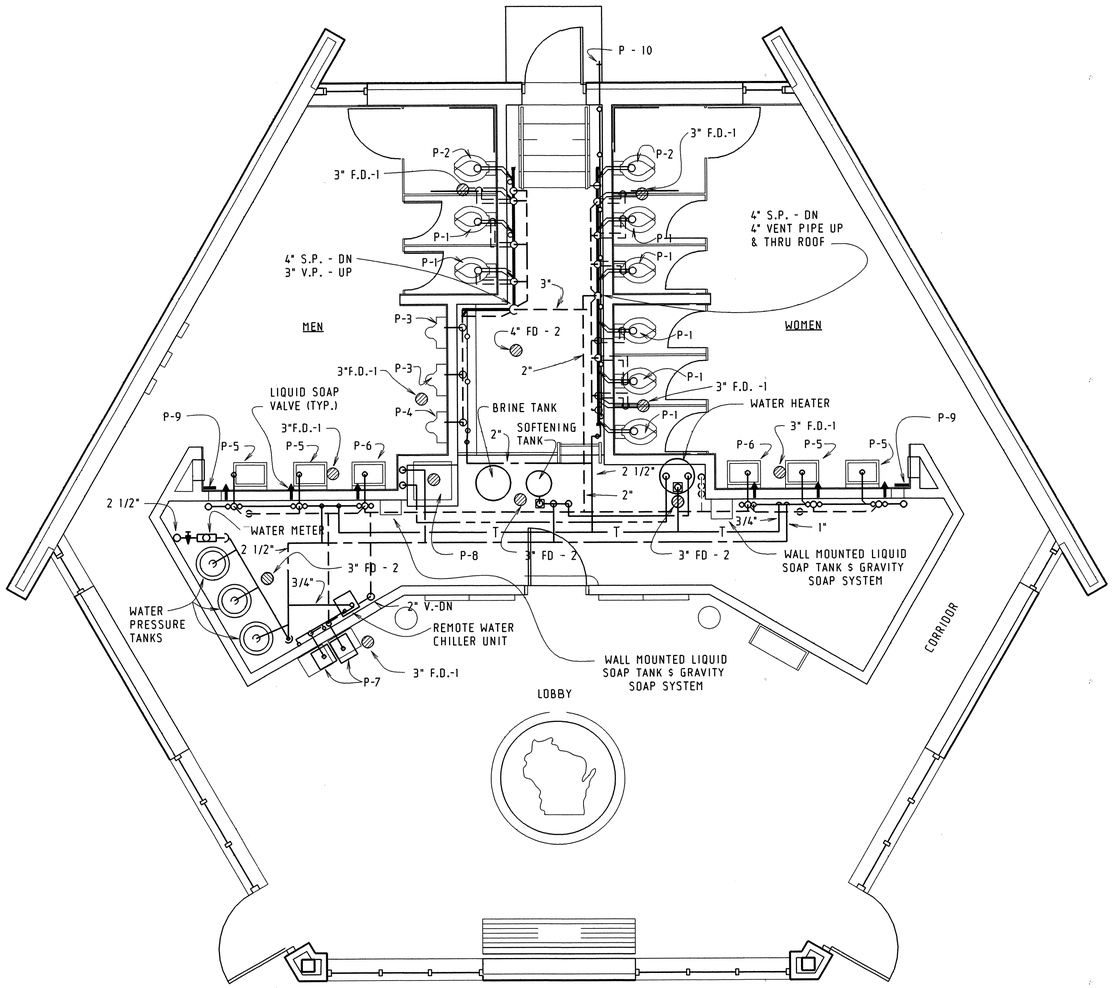

FLOOR PLAN

SC1/4"=1'-0"

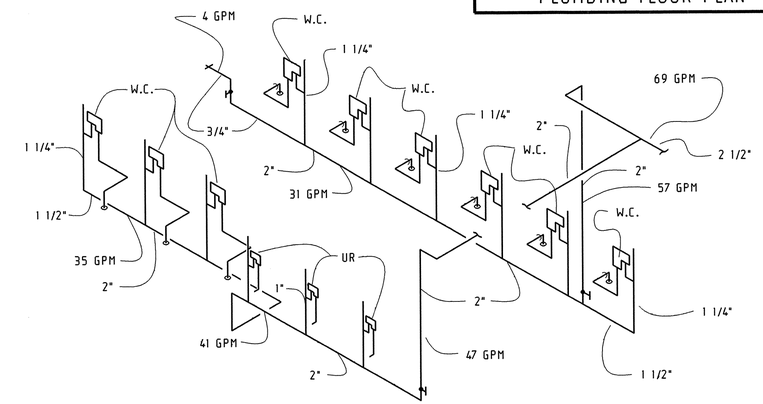

PIPING ISOMETRIC - WATER SUPPLY

NO SCALE

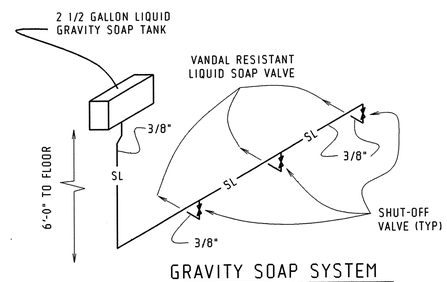

GRAVITY SOAP SYSTEM

NO SCALE

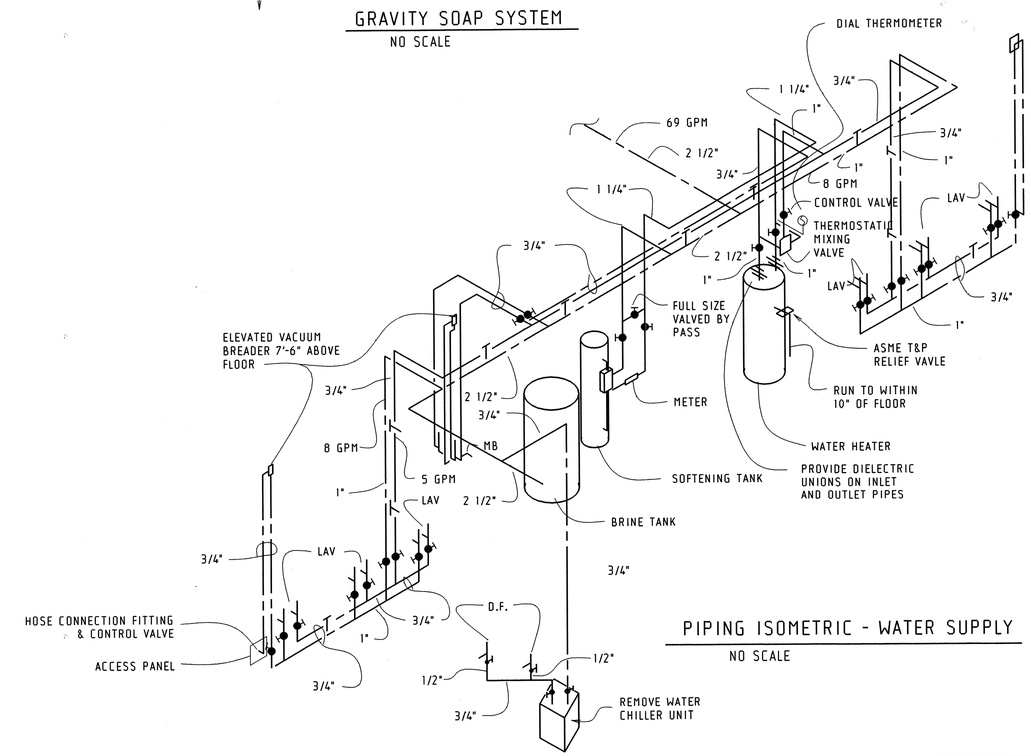

PIPING ISOMETRIC - WATER SUPPLY

NO SCALE

0014-77-03	2.21	R: 15 JUN 88
HEATING & VENT. FLOOR PLAN		H1

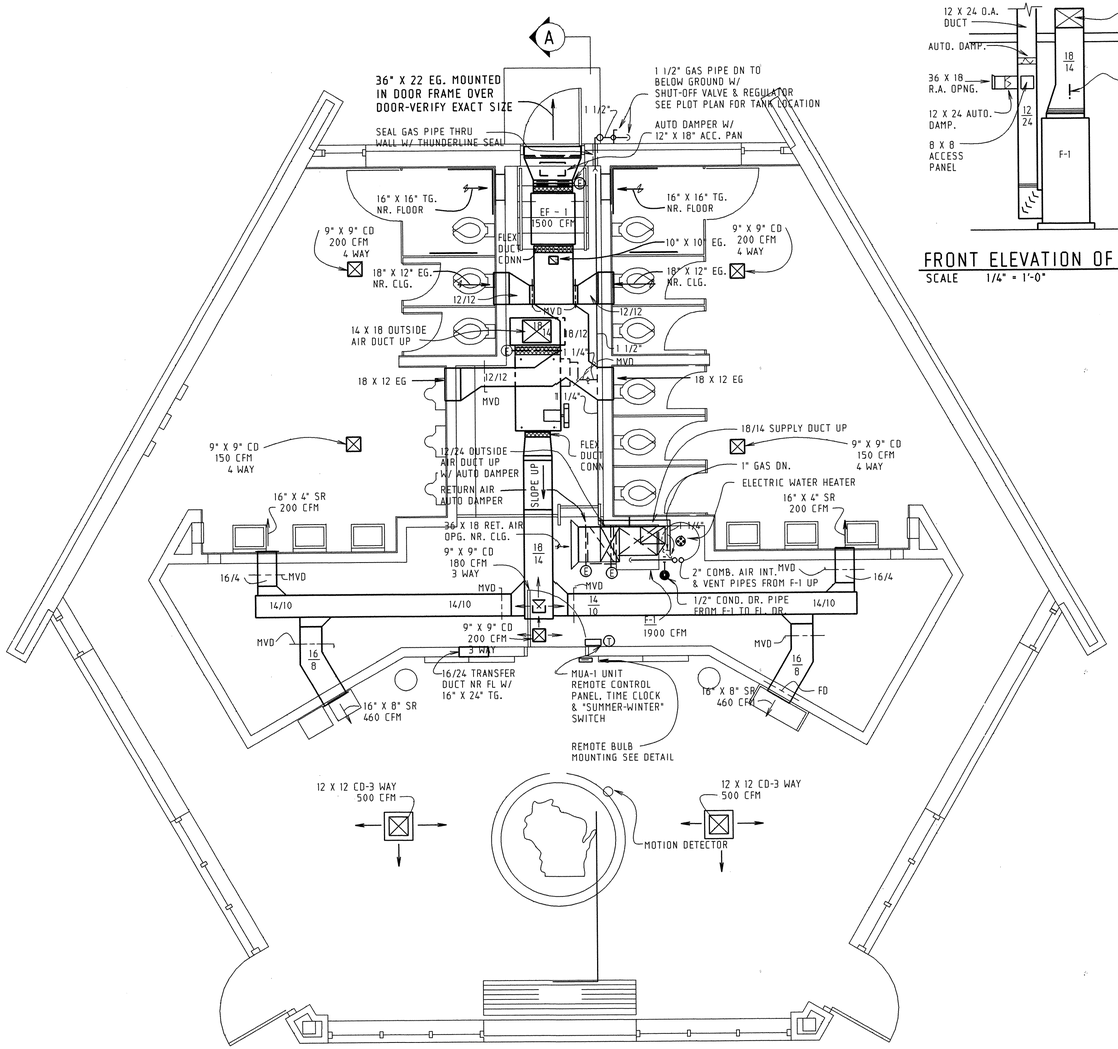

FLOOR PLAN

0 2 4 FT

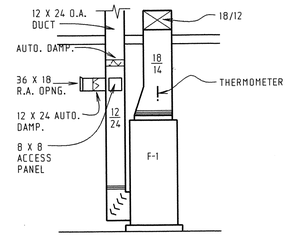

FRONT ELEVATION OF FURNACE

SCALE 1/4" = 1'-0"

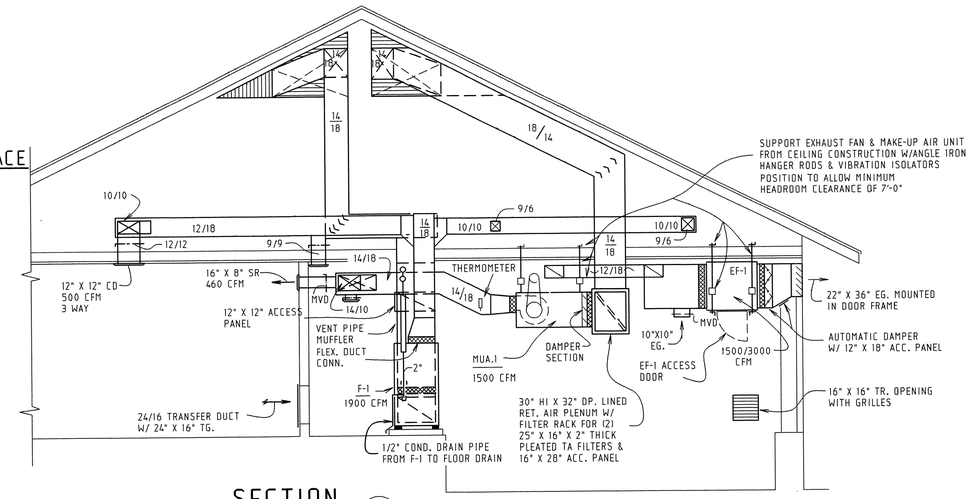

SECTION A

0 2 4 FT

NOTE:
KEEP HVAC UNITS AS CLOSE TO CEILING AS POSSIBLE

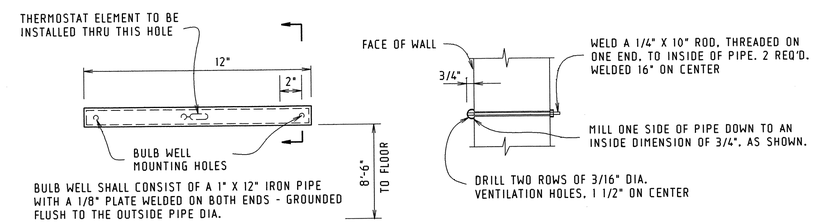

THERMOSTAT BULB MOUNTING DETAIL

NO SCALE

SCHEDULE OF GRILLES, REGISTERS & DIFFUSERS

SYMBOL	DESCRIPTION	MANUFACTURER	MODEL NO.	MATERIAL	DAMPER	FINISH	REMARKS
CD	CEILING DIFFUSER	TITUS	TDCA-AA-TYPE 1	ALUMINUM	YES	OFF WHITE	SEE DWGS FOR THROW PATTERN
SR	SUPPLY REGISTER	TITUS	300 RS	STEEL	YES	PRIME COAT	
TG	TRANSFER GRILLE	TITUS	33RS	STEEL	NO	PRIME COAT	HEAVY DUTY
RG/EG	RTN. OR EXH. GRILLE	TITUS	30RL	STEEL	YES	PRIME COAT	HEAVY DUTY

EXHAUST FAN SCHEDULE

SYMBOL	DESCRIPTION	GREENHECK MOD. NO.	CFM HIGH/LOW SPD./SPD.	SP	RPM HIGH/LOW SPD./SPD.	HP	VOLTS/PHASE	SONES	REMARKS
EF-1	TOILET EXHAUST FAN	DSQ-140	3000/1500	.50/.125	1750/860	1	240V/1Φ	19.2/6.4	

PROVIDE UNIT W/
1. RIS VIBRATION ISOLATORS FOR CEILING MOUNTING
2. INLET & DISCHARGE DUCT FLANGES
3. TWO SPEED MOTOR
4. INSULATED HOUSING
5. STARTER: ALLEN BRADLEY #520 W/ "HIGH-LOW-OFF-AUTO" SELECTOR SWITCH.

MAKE-UP AIR UNIT SCHEDULE

SYMBOL	DESCRIPTION	WEATHER RITE MOD. NO.	HTG. CAP. (MBH)	CFM	ESP	HP	VOLTS/PHASE	REMARKS
MUA-1	MAKE-UP-AIR UNIT	112	150	1500	.75	3/4	240V/1Φ	

PROVIDE UNIT W/
1. BURNER AND GAS TRAIN SUITABLE FOR LP GAS
2. SPRING ISOLATORS FOR CEILING MOUNTING
3. REMOTE CONTROL PANEL
4. STARTER BY MANUFACTURER
5. INLET DAMPER SECTION

FURNACE SCHEDULE

SYMBOL	DESCRIPTION	LENNOX MOD. NO.	HTG. CAP.(MBH) INPUT	HTG. CAP.(MBH) OUTPUT	CFM	ESP	HP	VOLTS/PHASE	REMARKS
F - 1	FURNACE	G1404/5-100	100	95	1900	.5	3/4	120V/1Φ	

PROVIDE UNIT W/
1. LPG. CONVERSION KIT
2. COMBUSTION AIR INTAKE AND EXHAUST MUFFLERS
3. WALL TERMINATION KIT

0014-77-03 2.22		R: 15 JUN 88
ATTIC HEATING & VENTILATION PLAN		H-2

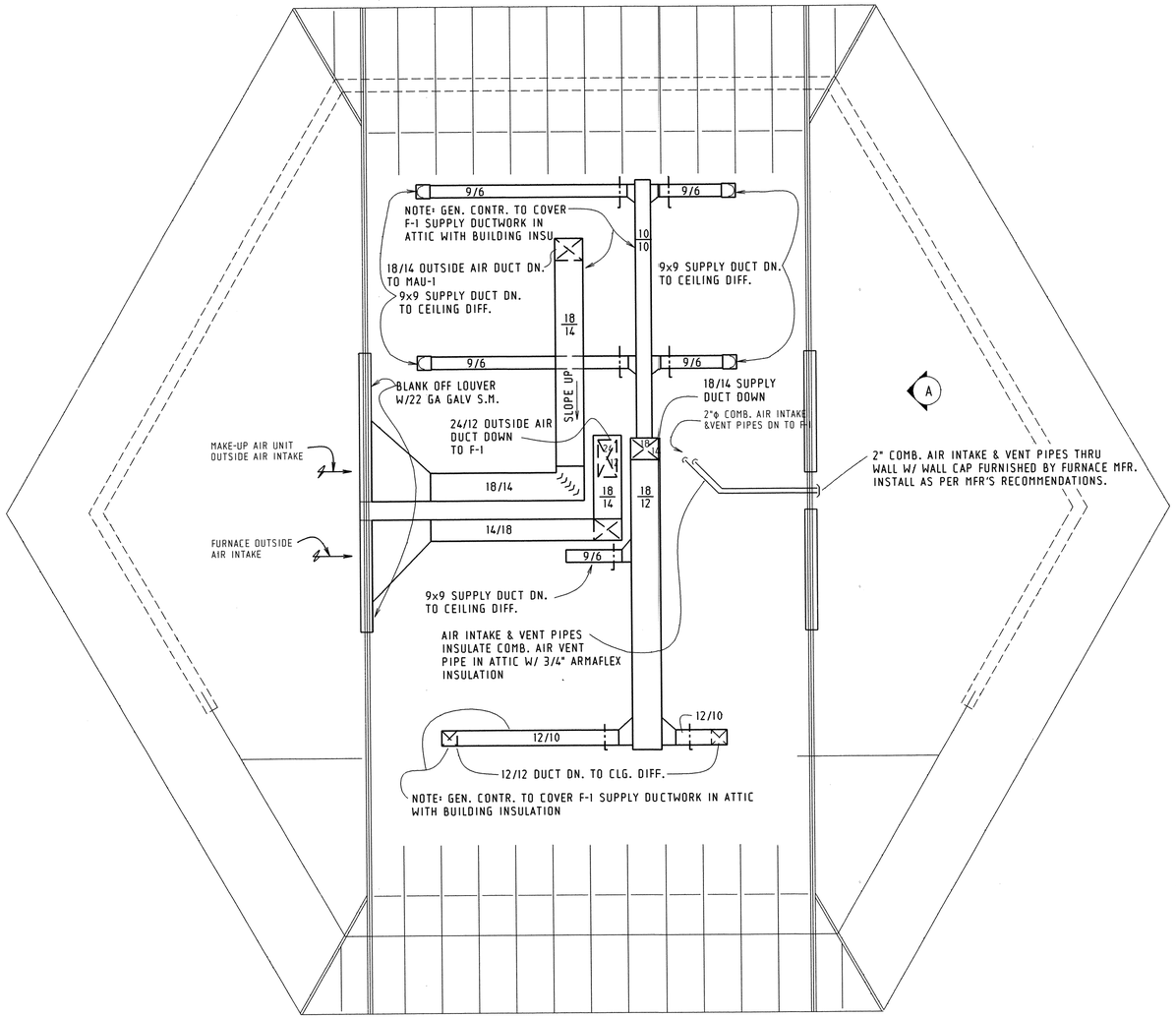

ATTIC HEATING & VENT FLOOR PLAN

0 2 4 FT

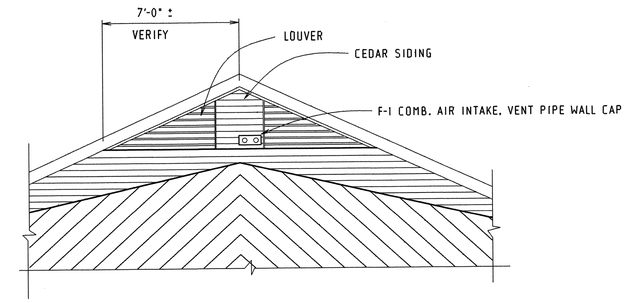

ELEVATION (A)

0 2 4 FT

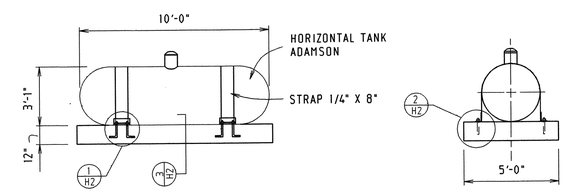

TANK ELEVATIONS

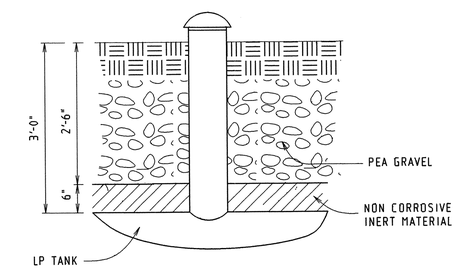

SECTION AT TANK

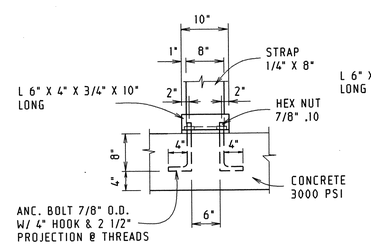

1/H2 DETAIL

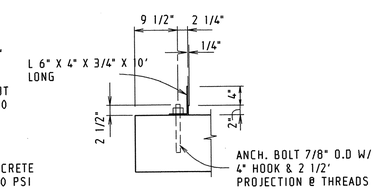

2/H2 DETAIL

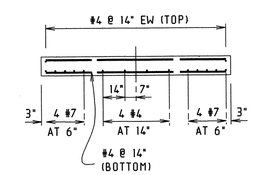

3/H2 SECTION

HORIZONTAL LP GAS TANK DETAILS

0014-77-03	2.23	R: 15 JUN 88
ELECTRICAL FLOOR PLAN		E1

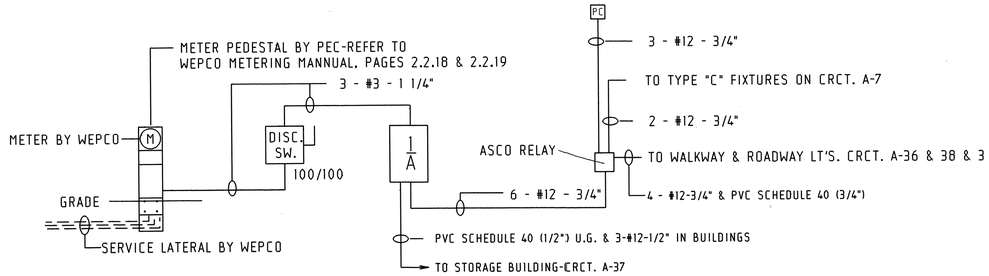

ELECTRICAL RISER

N.T.S.

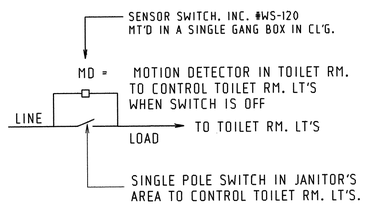

MOTION DETECTOR FOR TOILET RM. LT.S

(ONE FOR EACH TOILET RM.)

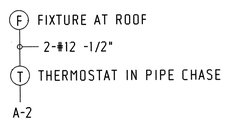

THERMOSTAT / SIGNAL LIGHT

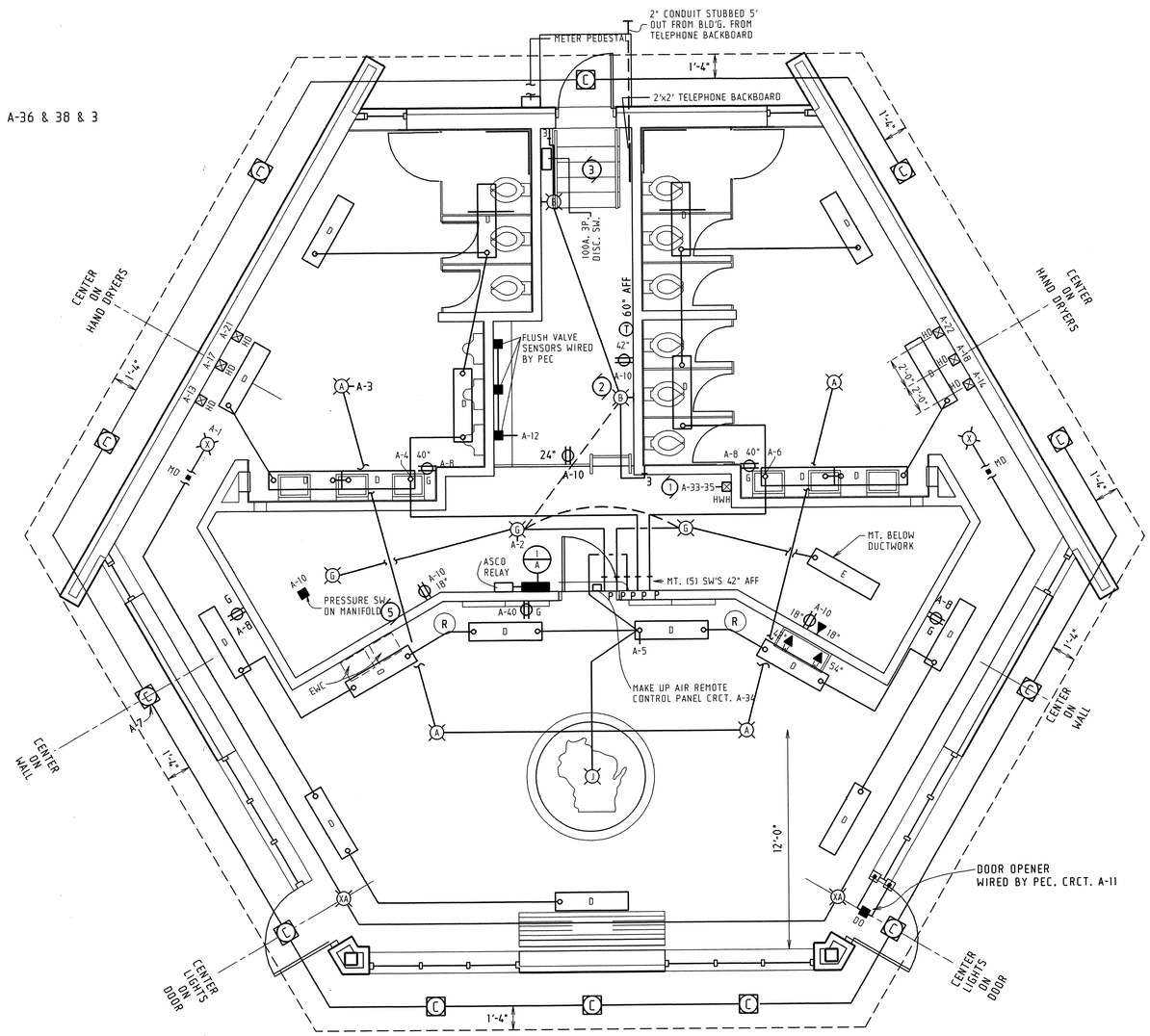

NOTES 1 - TYPE "F" FIXTURE TO BE MT'D. AT ROOF (VERIFY EXACT LOCATION IN FIELD). CRCT. A-2
2 - PHOTOCELL TO BE LOCATED ON NORTH SIDE OF BLD'G. @ GABLE ROOF.
3 - PROVIDE 2 GFI RCPT'S IN A WEATHERPROOF BOX FOR VENDING MACHINES OUTSIDE - VERIFY EXACT LOCATION WITH OWNER BEFORE INSTALLATION. EACH OUTLET ON A SEPARATE CRCT. A - 39 & 41.

ELECTRICAL FLOOR PLAN

0 1 2 3 4 6 FT.

0014-77-03	2.24	R: 15 JUN 88
ELECTRICAL SCHEDULES		E2

LIGHTING FIXTURE SCHEDULE

DES	DESCRIPTION	LAMP DATA NO	LAMP DATA TYPE	VOLT	DEPTH	LIGHTING FIXTURE MFGR	LIGHTING FIXTURE CAT. NO.	SURF. TYPE CEILING	SURF. TYPE WALL	SURF. TYPE SUSP.	SURF. TYPE SPECIAL	RECESS TYPE EXP. TEE	RECESS TYPE CONCEALED	RECESS TYPE DRY WALL	RECESS TYPE WOOD DK.	SEE NOTE
A	SELF CONTAINED EMERGENCY UNIT	1	BY MFGR.	6 & 115	3 7/8"	LITHONIA	ELSQ SR							•		
A	SELF CONTAINED EMERGENCY UNIT	1	BY MFGR.	6 & 115	4"	EXIDE	S201 SR							•		
A	SELF CONTAINED EMERGENCY UNIT	1	BY MFGR.	6 & 115	4"	DUAL LITE	EDS - F - SRM							•		
B	PORCELAIN LAMPHOLDER– MT. 7'-0" AFF ON WALL	1	150/IFA-21	115	——	P &S	44	•	•							
B	PORCELAIN LAMPHOLDER– MT. 7'-0" AFF ON WALL	1	150/IFA-21	115	——	CIRCLE	212-0	•	•							
B	PORCELAIN LAMPHOLDER– MT. 7'-0" AFF ON WALL	1	150/IFA-21	115	——	SYLVANIA	212-0	•	•							
C	RECESSED SECURITY LIMINAIRE	1	LU100	115	7 1/2"	ALKCO	R-19-S-11-F-120V								•	
D	1' X 4' SURFACE MT'D. SECURITY LUMINAIRE	2	F40WW/RS WM	115	4 1/4"	FAIL SAFE	FMS 012 240 120 - 93/86 - ESB	•								
D	1' X 4' SURFACE MT'D. SECURITY LUMINAIRE	2	F40WW/RS WM	115	5"	LITHONIA	761240 ES	•								
D	1' X 4' SURFACE MT'D. SECURITY LUMINAIRE	2	F40WW/RS WM	115	4"	ALKCO	SM1010 - 4 - EE	•								
E	ACRYLIC PRISMATIC WRAPAROUND	2	F40WW/RS WM	115	3 5/16"	LITHONIA	2AW240 AR			•						
E	ACRYLIC PRISMATIC WRAPAROUND	2	F40WW/RS WM	115	3 1/16"	DAY - BRITE	45257 - 4			•						
E	ACRYLIC PRISMATIC WRAPAROUND	2	F40WW/RS WM	115	3"	GUTH	ACR6780/120			•						
F	AMBER GLOBE FLASHER MT'D ON APEX OF ROOF ON CONDUIT AS REQ'D.	1	BY MFGR.	115	8 1/2"	BENJAMIN	KL - 4012 - 120				•					
F	AMBER GLOBE FLASHER MT'D ON APEX OF ROOF ON CONDUIT AS REQ'D.	1	BY MFGR.	115	11 3/8"	FEDERAL SIGNAL	371 L				•					
F	AMBER GLOBE FLASHER MT'D ON APEX OF ROOF ON CONDUIT AS REQ'D.	1	BY MFGR.	115	10 3/8"	EDWARDS	57A - AY				•					
G	RLM - BOTTOM OF UNIT MT'D. 7'-8" AFF.	1	150/IF A-21	115	9 3/8"	ABOLITE	RF-150			•						
G	RLM - BOTTOM OF UNIT MT'D. 7'-8" AFF.	1	150/IF A-21	115	8 3/8"	BENJAMIN	V5642			•						
G	RLM - BOTTOM OF UNIT MT'D. 7'-8" AFF.	1	150/IF A-21	115	6 7/8"	HUBBELL	RP-214			•						
X	EXIT LT. SINGLE FACE	2	20T6 1/2	115	9 1/4"	FAIL SAFE	EXI 1RW	•								
X	EXIT LT. SINGLE FACE	2	15T7	115	7 5/8"	KENALL	6591	•								
X	EXIT LT. SINGLE FACE	2	20T6 1/2	115	9 1/4"	LITHONIA	701 RW	•								
XA	EXIT LT. DOUBLE FACE	2	20T6 1/2	115	9 1/4"	FAIL SAFE	EXI 2RW	•								
XA	EXIT LT. DOUBLE FACE	2	15T7	115	7 5/8"	KENALL	6551	•								
XA	EXIT LT. DOUBLE FACE	2	20T6 1/2	115	9 1/4"	LITHONIA	702 RW	•								
J	7 1/2" DIA. x 10" O.A. ROUND CYLINDER-SEMI-RECESSED	1	150PAR38 SP	115	10"	McPHILBEN	3-203PF							•		
K	FLOODLIGHT	1	150 MH DOUBLE ENDED	115	9"x8 1/2" x10"	SYLVANIA	MKR-W-150MH-120-H					•				LF-1

NOTE . LF-1. MOUNT FIXTURES 10' ABOVE FINISHED GRADE ON POLE. FIXTURE TO BE CLAMPED ON TO POLE. PROVIDE HOLE IN HOLE WITH GROMET TO BRING WIRING THRU. LT'S TO BE ON SAME CRCT. AS POLE LUMINAIRE

MOTOR WIRING SCHEDULE

MO. NO.	HP	VOLT	Φ	DRIVING	MECH. MO. NO.	LOCATION	CIRCUITING SOURCE	CIRCUITING CRCT.	STARTER TYPE	STARTER FB	STARTER IB	STARTER WB	STARTER LOC.	CONTROL TYPE	CONTROL FB	CONTROL IB	CONTROL WB	CONTROL LOC	SEE NOTE
1	3/4	120	1	FURNACE	F-1	UTILITY	1/A	25	SPST	PEC	PEC	PEC	OU						
2	3/4	240	1	MAKE UP AIR	MUA 1	PIPE CHASE	1/A	26	CP	HV	HV	PEC	NU						
3	1	240	1	EXHAUST FAN	EF 1	PIPE CHASE	1/A	30	CS	HV	PEC	PEC	NU						
4	3 & 750W	240	1	WELL & HEATER	-	OUT-SIDE	1/A	27	CP	WC	WC	PEC	WELL						
5	1/5	115	1	REMOTE WATER CHILLER UNIT	-	UTILITY	1/A	31	SPST	PEC	PEC	PEC	NU						

PANELBOARD SCHEDULE

MARK	1/A	LOCATION	UTILITY
TYPE	NQOB	ACC.	
ENCLOSURE	SURFACE	ACC.	
VOLTAGE	120/240 1Φ3W	AMPS.	225 A
INT. DUTY	10M AIC		
MAINS	MLO		

LOAD	Q	CODE	P	AMP.	C/B	C/B	AMP.	P	CODE	Q	LOAD
80	4	L	1	20	1	2	20	1	L	7	850
1105	10	L	1	20	3	4	20	1	L	6	600
934	10	L	1	20	5	6	20	1	L	6	600
1190	12	L	1	20	7	8	20	1	R	4	800
750	6	L	1	20	9	10	20	1	R	4	800
—	2	DO	1	20	11	12	20	1	S	3	—
2300	1	HD	2	20	13	14	20	2	HD	1	2300
—	—	—	—	—	15	16	—	—	—	—	—
2300	1	HD	2	20	17	18	20	2	HD	1	2300
—	—	—	—	—	19	20	—	—	—	—	—
2300	1	HD	2	20	21	22	20	2	HD	1	2300
—	—	—	—	—	23	24	—	—	—	—	—
3/4HP	1	M1	1	20	25	26	20	2	M2	1	3/4HP
3HP	1	M4	2	60	27	28	—	—	—	—	—
—	—	—	—	—	29	30	20	2	M3	1	1 HP
1/5HP	1	M5	1	20	31	32	—	—	—	—	—
4500	1	HWH	2	30	33	34	20	1	MHA CP	1	—
—	—	—	—	—	35	36	20	1	L	7	1275
350	1 2	L R	1	20	37	38	20	1	L	9	1475
200	1	R	1	20	39	40	20	1	R	1	200
200	1	R	1	20	41	42	20	1	SPARE		

NOTE: PROVIDE LOCKOUT ON C/B #1

0014-77-03 2.25		R: 15 JUN 88
STORAGE BLDG. PLANS, ELEVATIONS		SB1

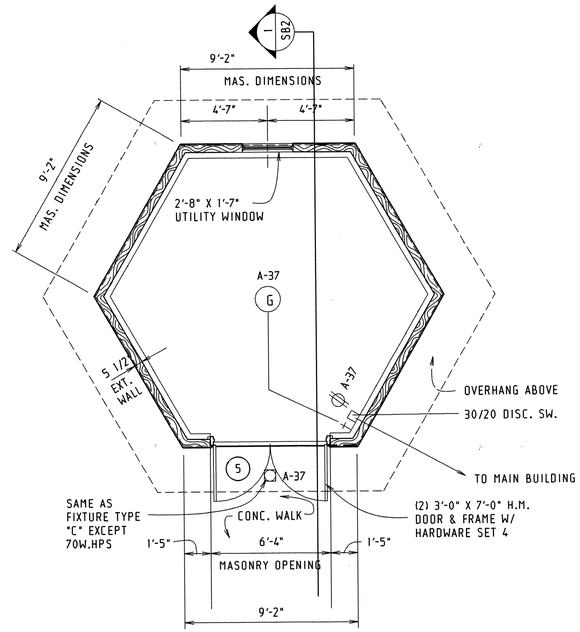

FLOOR PLAN

0 3 6 FT

SEE ELECTRICAL DWGS. FOR
SERVICE TO STORAGE BUILDING.

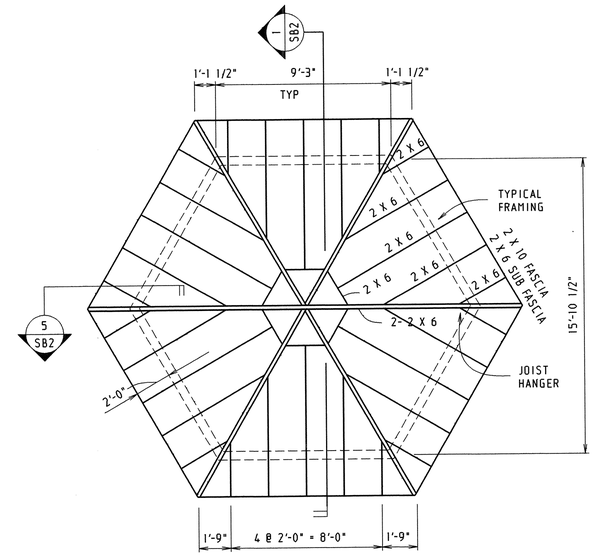

ROOF FRAMING PLAN

0 3 6 FT

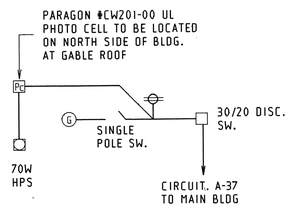

ELECTRICAL RISER

N.T.S.

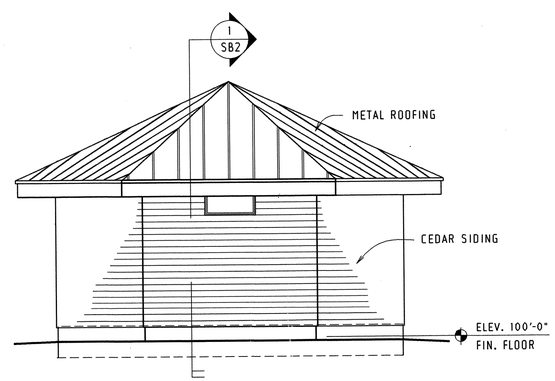

SIDE ELEVATION

0 2 4 FT

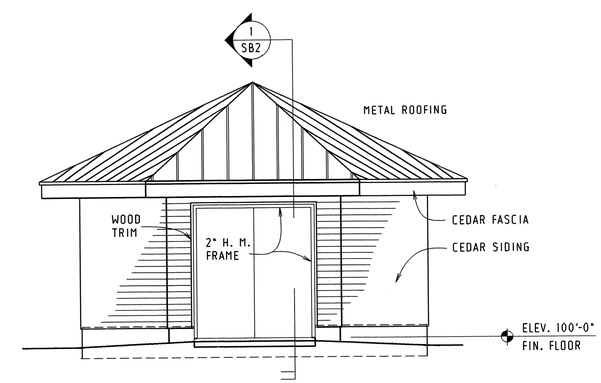

FRONT ELEVATION

0 2 4 FT

0014-77-03	2.26
STORAGE BUILDING SECTIONS	SB2

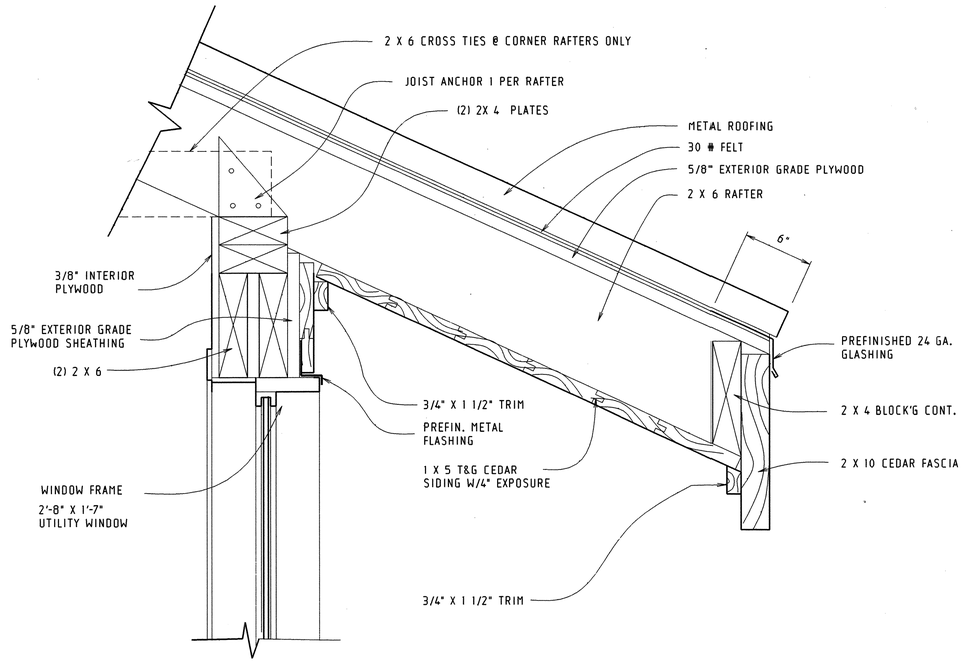

6 SB2 DETAIL

0 2 4 6 IN.

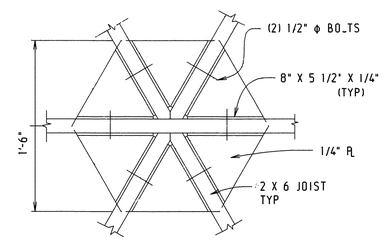

4 SB2 DETAIL

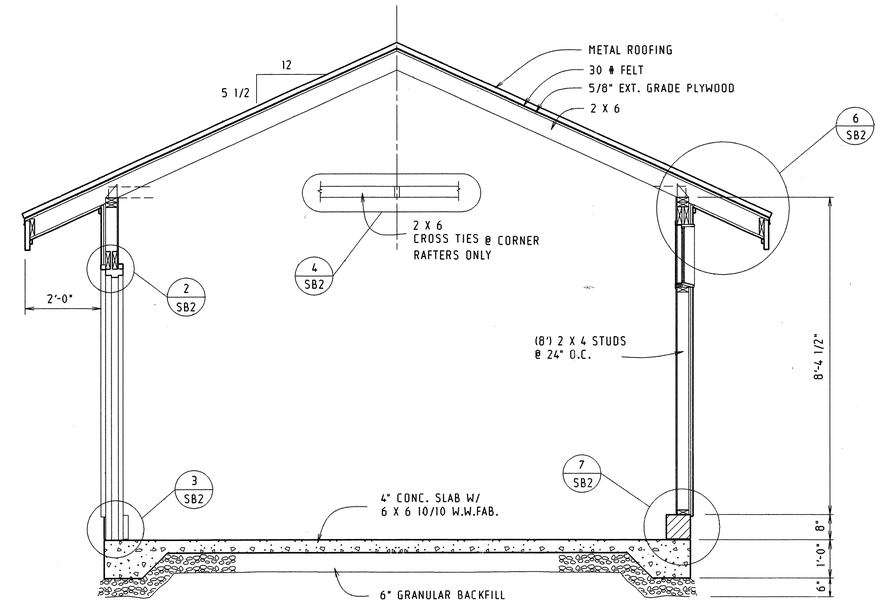

1 SB2 SECTION

0 1 2 FT

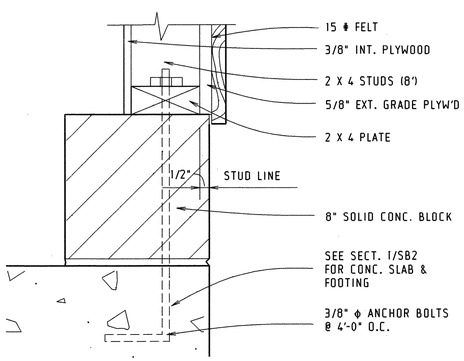

7 SB2 DETAIL

0 2 4 6 IN.

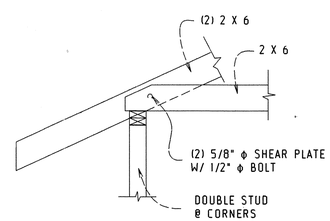

5 SB2 SECTION

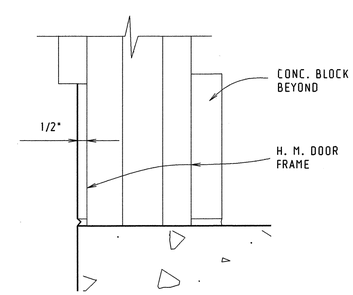

3 SB2 DOOR SILL

0 2 4 6 IN.

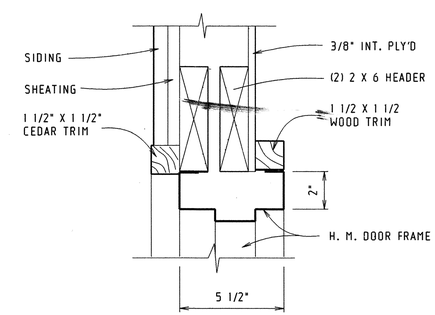

2 SB2 DOOR HEAD

0 2 4 6 IN.

DATE 07/07/88

E S T I M A T E O F Q U A N T I T I E S

ITEM	ITEM DESCRIPTION	UNIT	TOTAL	0014-77-03 QUANTITY
90001	WAYSIDE BUILDINGS AND SITE WORK	L.S.	1.00	1.00
90002	WAYSIDE BUILDINGS AND SITE WORK	L.S.	1.00	1.00