Jun 04

ORDER OF SHEETS

TOTAL SHEETS = 189

STATE OF WISCONSIN
DEPARTMENT OF TRANSPORTATION

PLAN OF PROPOSED IMPROVEMENT

MADISON - JANESVILLE ROAD

(MADISON SAFETY & WEIGHT FACILITY)

IH 39/90
DANE COUNTY

STATE PROJECT NUMBER
1002-02-72

STATE PROJECT	FEDERAL PROJECT	
	PROJECT	CONTRACT
1002-02-72	IM 2006336	1

As Built Construction Plan

Work Type: SWEF Building, Scales, Pavement
Contractor: Parisi Construction Co.
Project Manager: Vierbicher Assoc. - Todd Halvensleben
Work Started-Completed: 8/16/06 - 12/15/08

N

DESIGN DESIGNATION

A.A.D.T. (2002)	=	23,400 E.B.
A.A.D.T.	=	
D.H.V.	=	
D.D.	=	
T. (21.6%)	=	5,050
DESIGN SPEED	=	
ESALS	=	

CONVENTIONAL SYMBOLS

PLAN
- CORPORATE LIMITS
- PROPERTY LINE
- LOT LINE
- LIMITED HIGHWAY EASEMENT
- EXISTING RIGHT OF WAY
- PROPOSED OR NEW R/W LINE
- SLOPE INTERCEPT
- REFERENCE LINE
- EXISTING CULVERT
- PROPOSED CULVERT (Box or Pipe)
- COMBUSTIBLE FLUIDS — CAUTION
- MARSH AREA
- WOODED OR SHRUB AREA

PROFILE
- GRADE LINE
- ORIGINAL GROUND
- MARSH OR ROCK PROFILE (To be noted as such) — ROCK
- SPECIAL DITCH — LABEL
- GRADE ELEVATION — 95.36
- CULVERT (Profile View)

UTILITIES
- ELECTRIC — E
- FIBER OPTIC — FO
- GAS — G
- SANITARY SEWER — SAN
- STORM SEWER — SS
- TELEPHONE — T
- WATER — W
- UTILITY PEDESTAL
- POWER POLE
- TELEPHONE POLE

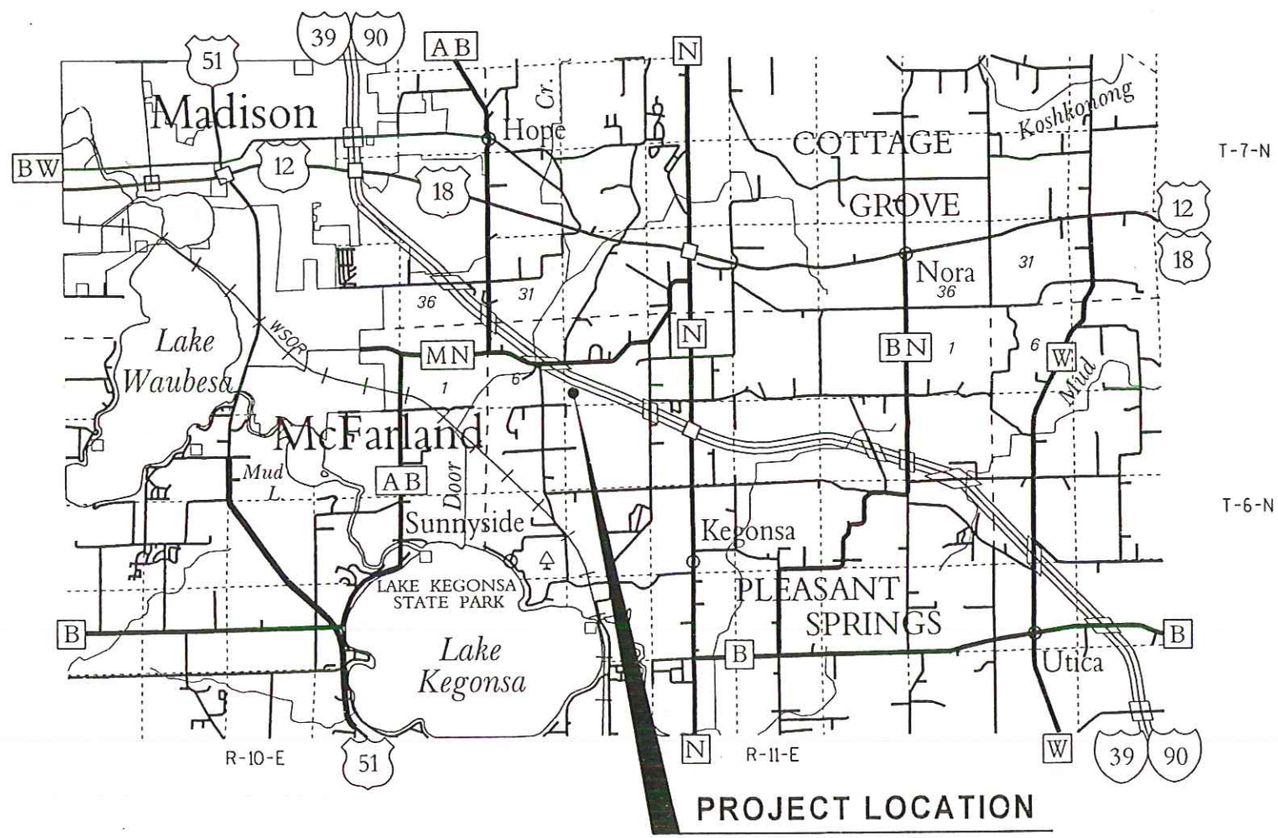

PROJECT LOCATION

LAYOUT
SCALE 0 — 1 MI.

TOTAL NET LENGTH OF CENTERLINE = 0.000 MI.

MADISON SWEF #16
STA 339'R'+50.00 - STA 358'R'+00.00
Y= 368,000 +/- 1000
X= 2,207,000 +/- 1000

"Coordinates on this plan are referenced to the Wisconsin State Plane Coordinate System (WSPCS), 'South' Zone."

PLANS PREPARED BY
WISDOT STAFF

STATE OF WISCONSIN
DEPARTMENT OF TRANSPORTATION

PREPARED BY
Surveyor
Designer: ROBERT SPOERL
Project Manager: JOHN KINAR
District Examiner
District Supervisor
C.O. Examiner: Jane Englebretsen

APPROVED FOR BUREAU OF HIGHWAY OPERATIONS
DATE: 2/28/06 John L. Kinar (Signature)

E

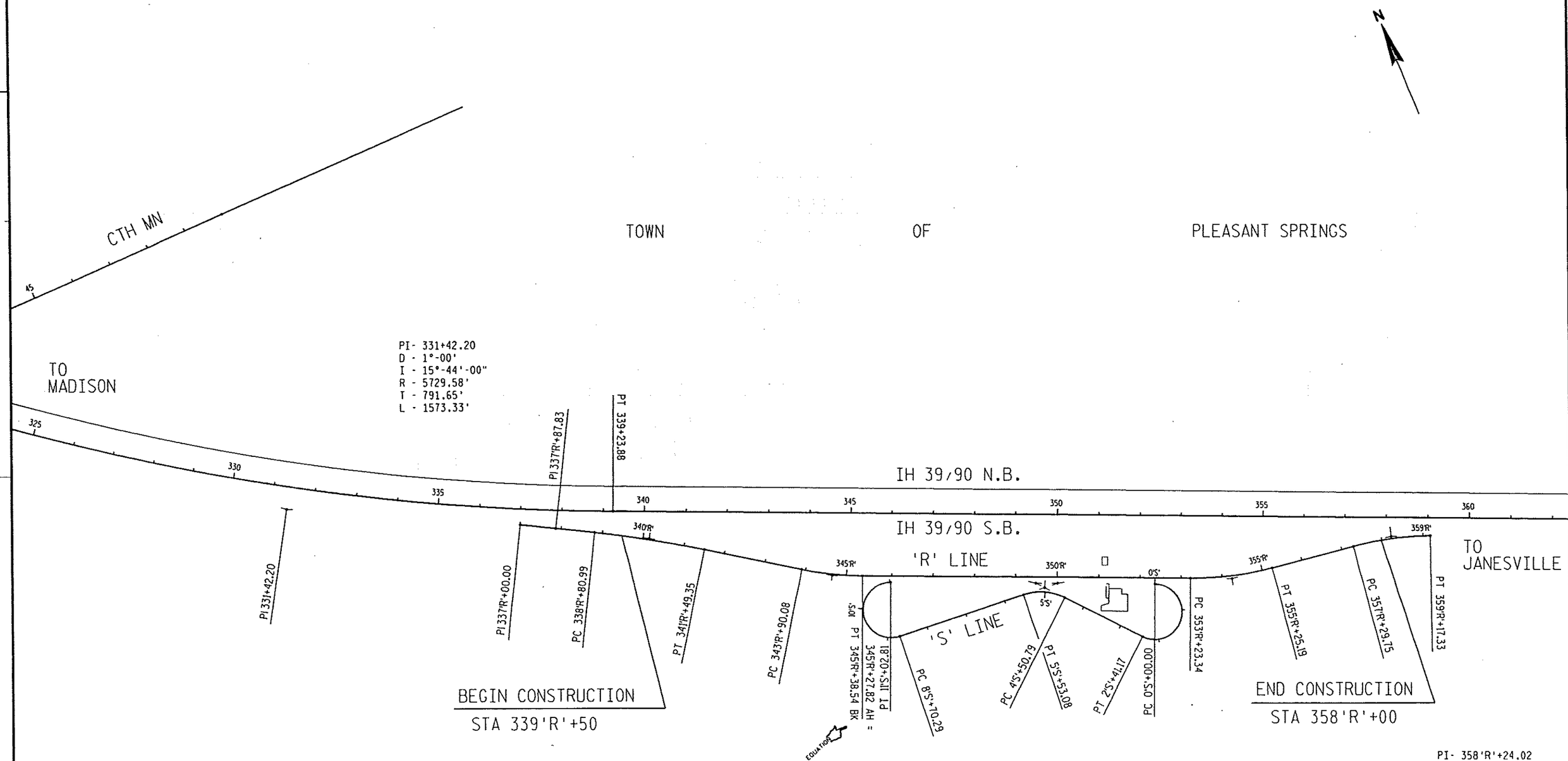

PROJECT NO: 1002-02-72	HWY: IH 39/90	COUNTY: DANE	MADISON SWEF - PROJECT OVERVIEW	SHEET NO: 2	E

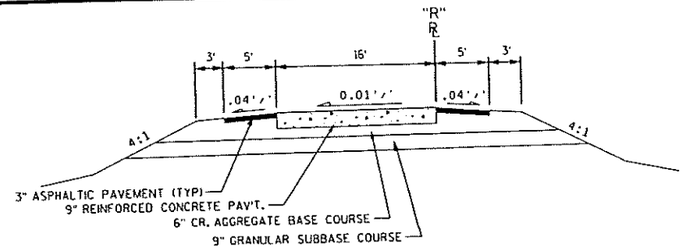

EXISTING TYPICAL SECTION

EXIT & ENTRANCE RAMPS

STA 339"R"+50.00 - STA 345"R"+38.54 BK.
STA 353"R"+00.00 - STA 358"R"+00.00

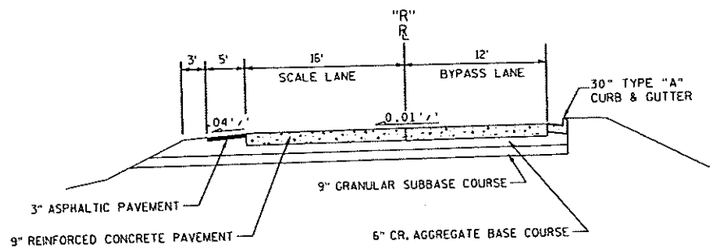

EXISTING TYPICAL SECTION

SCALE APPROACH RAMP

STA 345"R"+27.82 AH. - STA 353"R"+00.00

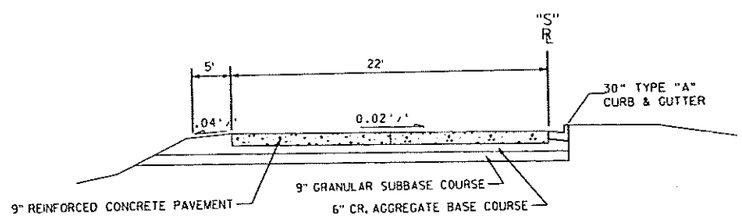

EXISTING TYPICAL SECTION

PARKING AREA RAMPS

STA 0"S"+00.00 - STA 3"S"+50.00
STA 9"S"+00.00 - STA 10"S"+94.33

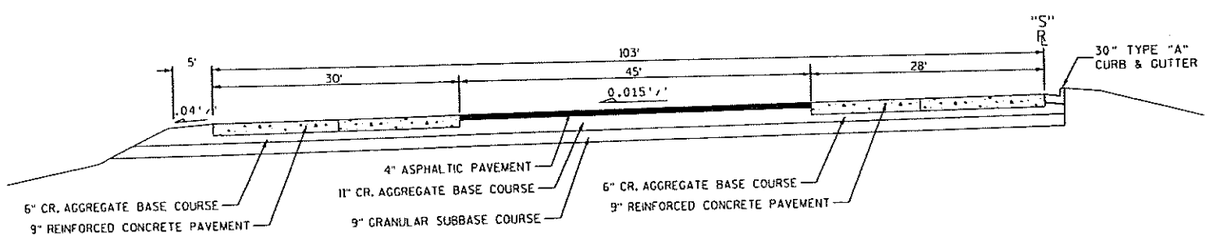

EXISTING TYPICAL SECTION

TRUCK PARKING AREA

STA 3"S"+50.00 - STA 9"S"+00.00

GENERAL NOTES

THE CONTRACTOR SHALL CONDUCT ALL OPERATIONS IN A MANNER TO PRECLUDE DAMAGING EXISTING TREES.

NO TREES OR SHURBS SHALL BE REMOVED WITHOUT THE APPROVAL OF THE ENGINEER.

THE LOCATIONS OF EXISTING UTILITY INSTALLATIONS AS SHOWN ON THE PLAN ARE APPROXIMATE. THERE MAY BE OTHER UTILITY INSTALLATIONS WITHIN THE PROJECT AREA THAT ARE NOT SHOWN.

DISTURBED AREAS WITHIN THE RIGHT OF WAY, EXCEPT THE AREAS WITHIN THE FINISHED SHOULDER POINTS, SHALL BE SALVAGED TOPSOILED, FERTILIZED, SEEDED AND MULCHED.

THE ROADWAYS AND PARKING LOT SHALL BE RESTORED AS NEAR AS PRACTICABLE TO A NATURAL CONDITION.

MISCELLANEOUS REMOVAL ITEMS REQUIRING RESTORATION OF CONCRETE OR ASPHALT SHALL BE REMOVED TO AN EXISTING JOINT OR SAWED AS DIRECTED BY THE ENGINEER.

CURB & GUTTER GRADES GIVEN ARE ON THE FLANGE LINE. CURB & GUTTER RADII ARE MEASURED TO FLANGE.

ALL DIMENSIONS GIVEN TO EXISTING FEATURES SHALL BE CONSIDERED AS APPROXIMATE.

THE EROSION CONTROL ITEMS SHOWN ON THE PLANS ARE AT SUGGESTED LOCATIONS. THE ENGINEER WILL DETERMINE EXACT LOCATIONS AND DIMENSIONS.

ASPHALTIC PAVEMENT LAYER BREAKDOWN:
SURFACE: 1½INCHES HMA PAVEMENT E-0.3
LOWER: 2 INCHES HMA PAVEMENT E-0.3
LOWER: 2 INCHES HMA PAVEMENT E-0.3

UTILITY LIST

ELECTRIC
ALLIANT ENERGY CORPORATION
1000 MAIN STREET
PO BOX 769
DUBUQUE, IA 52004-0769
ATTN: GARY QUADE
PHONE: 319-584-7395

TELECOMMUNICATIONS
TOUCH AMERICA, INC.
JORGENSON TECHNOLOGIES, INC
4235 ARGOSY CT.- UNIT D
MADISON WI 53714
ATTN: TOM HICKS
PHONE: 608-222-6411
MOBILE: 608-698-7273

TOUCH AMERICA, INC.
1315 N. MAIN ST.
HELENA MT 59601
ATTN: JOE ROBERTSON
PHONE: 406-495-9059

TO OBTAIN LOCATION OF PARTICIPANTS' UNDERGROUND FACILITIES BEFORE YOU DIG IN WISCONSIN

CALL DIGGERS HOTLINE

1-800-242-8511
TDD (FOR HEARING IMPAIRED)
1-800-542-2289
TOLL FREE
TELEFAX (414)259-0947
WWW.DIGGERSHOTLINE.COM

WIS. STATUTE 182.0175 (1974) REQUIRES MIN. OF 3 WORK DAYS NOTICE BEFORE YOU EXCAVATE.

Dena Draamm

WISDNR CONTACT

WI DEPARTMENT OF NATURAL RESOURCES
SOUTH CENTRAL DISTRICT HEADQUARTERS
ATTN: RUSSELL ANDERSON
ENVIRONMENTAL IMPACT COORDINATOR
3911 FISH HATCHERY ROAD
MADISON, WI 53711-5397
TEL: 608-275-3467
FAX: 608-275-3338

STANDARD DETAIL DRAWINGS

8A5-16a	INLET COVERS TYPE A, H, A-S & H-S
8C1-5	INLETS TYPE 1, 2, 3, & 4
8D1-13	CONCRETE CURB, CONCRETE CURB & GUTTER AND PAVEMENT TIES
8D4-3	CONCRETE SURFACE DRAIN & ASPHALTIC FLUME
8D5-11a	CURB RAMPS TYPES 1 AND 1-A
8D5-11b	CURB RAMPS TYPES 2 AND 3
8D5-11c	CURB RAMPS TYPE 4A
8D5-11d	CURB RAMPS TYPE 4B
8D5-11e	CURB RAMPS TYPE 5, 6 7A, 7B & 8
8E9-6	SILT FENCE
8E10-2	INLET PROTECTION TYPE A, B, C AND D
9B2-7	CONDUIT
9B4-8	PULL BOX
9C2-4	CONCRETE BASES TYPE 1,2 & 5
9C3-2	TRANSFORMER / PEDESTAL BASES
9C5-4	CONCRETE CONTROL CABINET BASES
9D2-2	SIGNAL OR LIGHTING CONTROL CABINET
9E1-5d	POLE MOUNTING FOR LIGHTING UNITS, TYPE 5 (30 FEET)
9E1-4g	HARDWARE DETAIL FOR POLE MOUNTINGS
9E3-2	NON-FREEWAY LIGHTING UNIT POLE WIRING
13B2-4	CONCRETE PAVEMENT APPROACH SLAB
13C1-11	CONCRETE PAVEMENT LONGITUDINAL JOINTS AND PAVEMENT TIES
13C13-4	URBAN DOWELED CONCRETE PAVEMENT
14A2-1	TREE PLANTING DETAIL
14B15-4a	STEEL PLATE BEAM GUARD, CLASS "A" INSTALLATION & ELEMENTS
14B15-4b	STEEL PLATE BEAM GUARD, CLASS "A" INSTALLATION & ELEMENTS
14B18-4a	STEEL PLATE BEAM GUARD, CLASS "A" (AT BRIDGES, OBSTACLES AND SIDEROADS/DRIVEWAYS)
14B24-4a, b & c	STEEL PLATE BEAM GUARD ENERGY ABSORBING TERMINAL
15A2-6	DELINEATOR POST, DELINEATOR BRACKET AND DELINEATOR
15A6-1	DELINEATOR LAYOUT
15C2-4a & b	BARRICADES AND SIGNS FOR MAINLINE CLOSURES
15C8-9a	PAVEMENT MARKING (MAINLINE)
15C12-2	TRAFFIC CONTROL FOR LANE CLOSURE (SUITABLE FOR MOVING OPERATIONS)
15D12-2	TRAFFIC CONTROL, LANE CLOSURE, SPEEDS GREATER THAN 40 MPH
15D16-1	TRAFFIC CONTROL, EXIT RAMP CLOSURE
15D27-1	TRAFFIC CONTROL, SHOULDER CLOSURE ON DIVIDED ROADWAY, SPEEDS GREATER THAN 40 M.P.H.

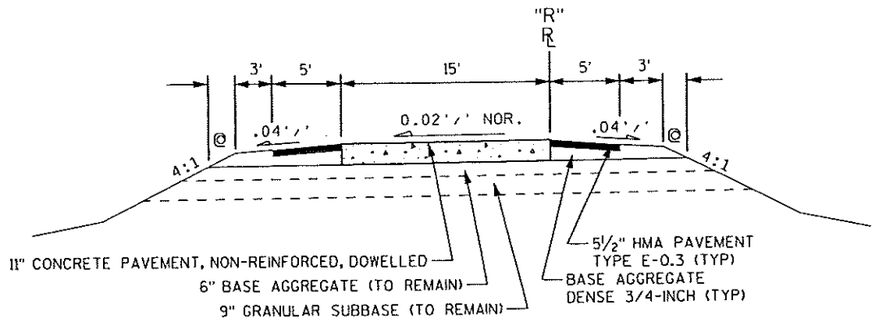

PROPOSED TYPICAL SECTION

EXIT & ENTRANCE RAMPS

STA 339"R"+50.00 - STA 345"R"+38.54 BK.
STA 353"R"+00.00 - STA 358"R"+00.00

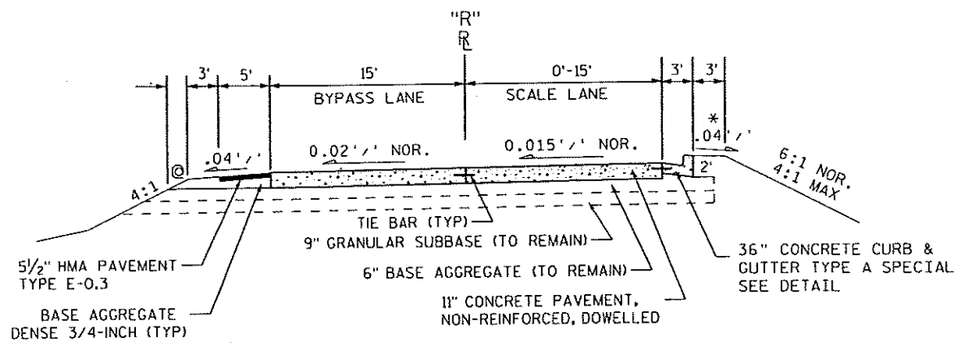

PROPOSED TYPICAL SECTION

SCALE APPROACH RAMP

STA 345"R"+27.82 AH. - STA 353"R"+00.00

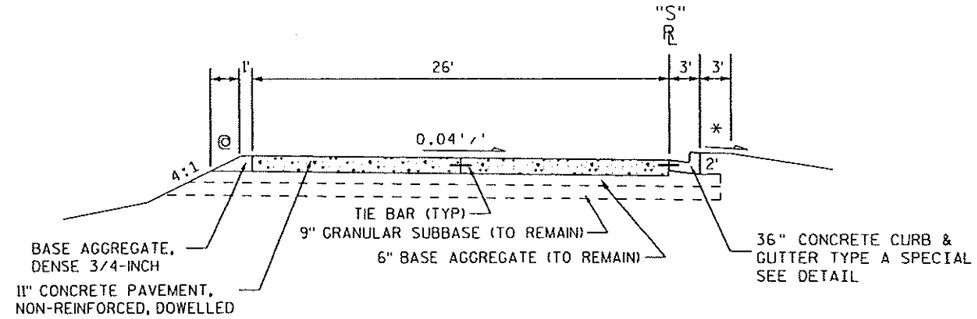

PROPOSED TYPICAL SECTION

PARKING AREA RAMPS

STA 0"S"+00.00 - STA 3"S"+50.00
STA 9"S"+00.00 - STA 10"S"+94.33

NOTES

ALL TYPICAL SECTIONS SHOW PAVEMENT STRUCTURE FOR VARIOUS ALIGNMENTS. FOR EXACT DETAILS ON WIDTHS OF PAVEMENT, SEE PAVING DETAILS.

CONCRETE CURB & GUTTER MAY BE POURED INTEGRAL.

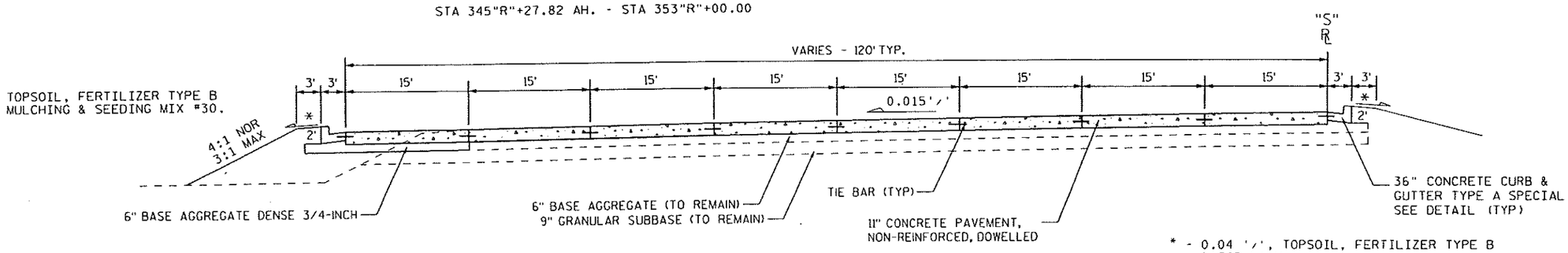

* - 0.04 '/', TOPSOIL, FERTILIZER TYPE B & SOD LAWN
@ - FERTILIZER TYPE B & SEEDING MIX #30.

PROPOSED TYPICAL SECTION

TRUCK PARKING AREA

STA 3"S"+50.00 - STA 9"S"+00.00

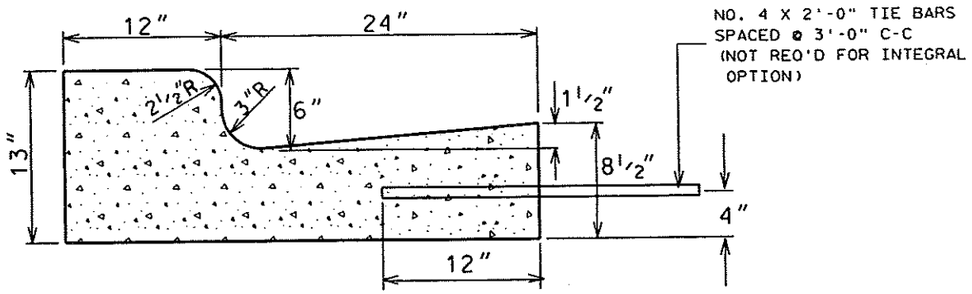

CONCRETE CURB & GUTTER
36-INCH TYPE A SPECIAL

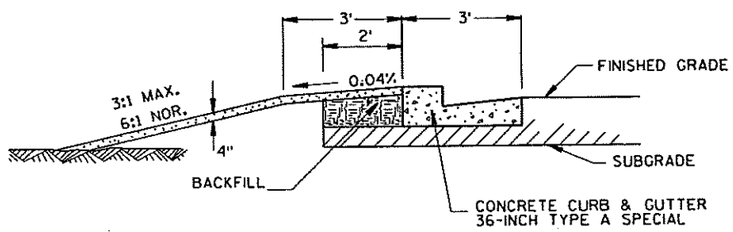

BERM DETAIL BEHIND 36" CURB & GUTTER

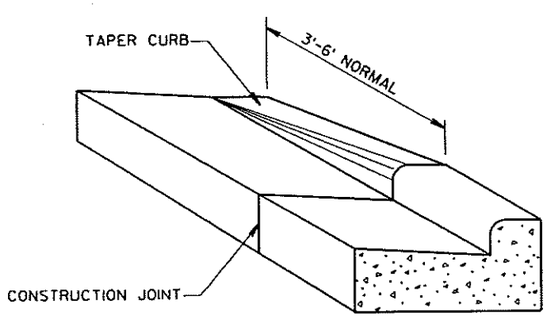

DETAIL OF CURB & GUTTER TERMINI

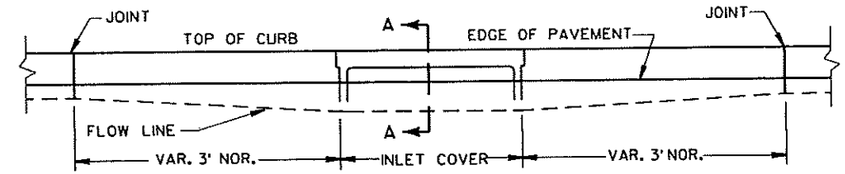

ELEVATION

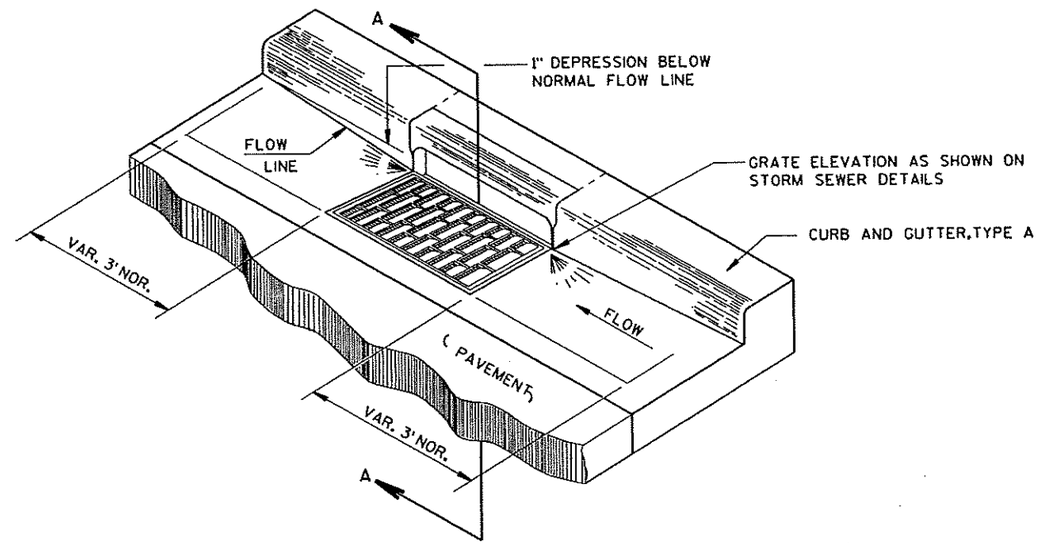

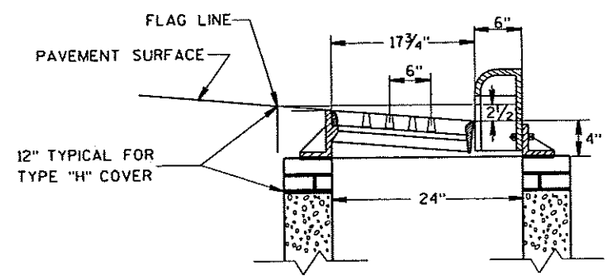

SECTION A-A

DETAIL OF CURB AND GUTTER AT INLETS
(TYPE 3-H INLET SHOWN)

STATE PROJECT NUMBER: 1002-02-72	HWY: IH 39/90	COUNTY: DANE	DETAILS	SCALE:	SHEET NO: 5	E

** SEE PLAN SHEETS AND/OR CROSS SECTIONS FOR ACTUAL DIMENSIONS. WALLS GREATER THAN 3 FT. MUST BE DESIGNED BY A GEOTECHNICAL ENGINEER. SOIL BEARING PRESSURE - 4000 PSF

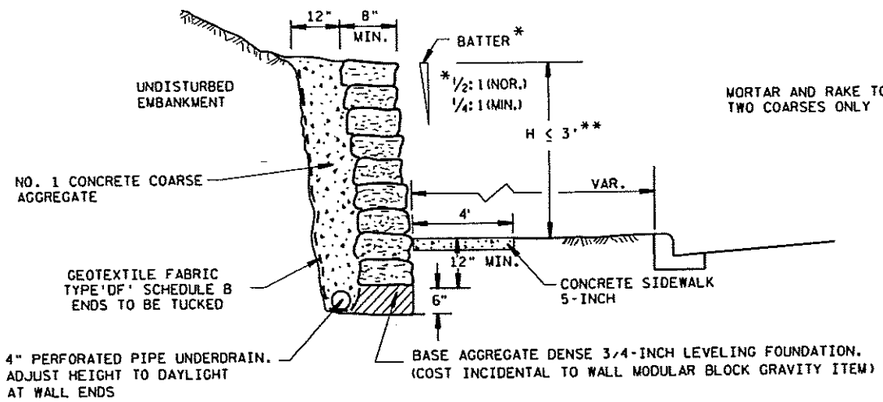

SIDE VIEW

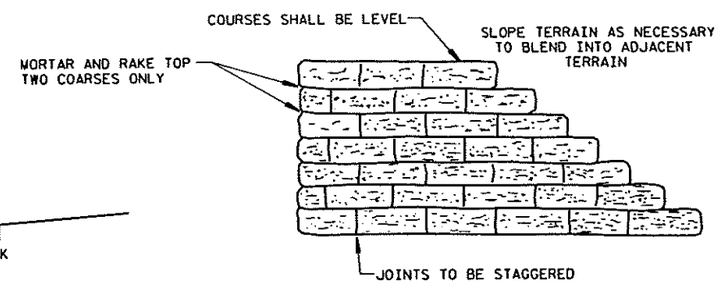

FRONT VIEW

MEASURED AND PAID FOR AS "WALL MODULAR BLOCK GRAVITY". PAY HEIGHT = H + 12"

WALL MODULAR BLOCK GRAVITY

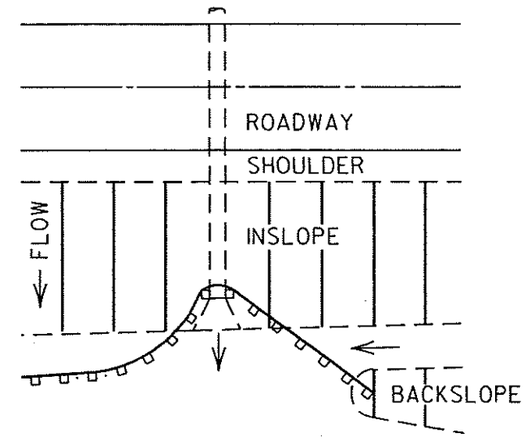

PLAN VIEW

TYPICAL INSTALLATION OF SILT FENCE AT CULVERTS

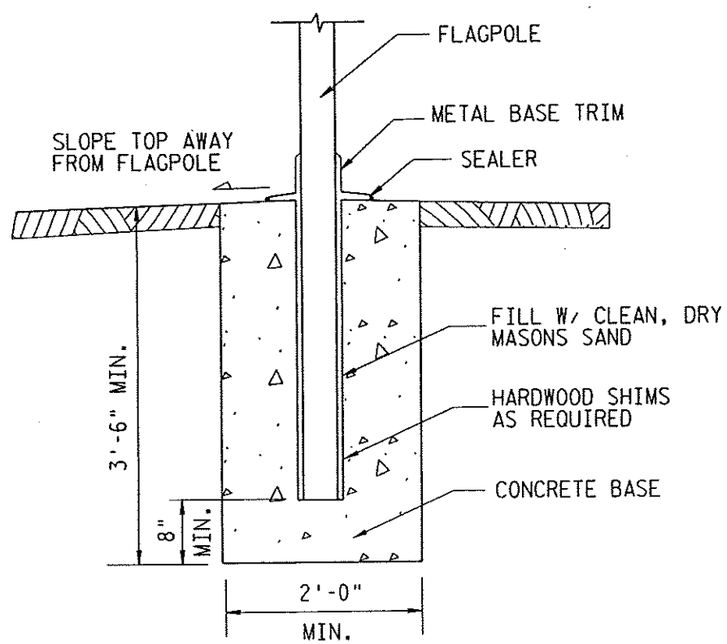

FLAGPOLE BASE DETAIL

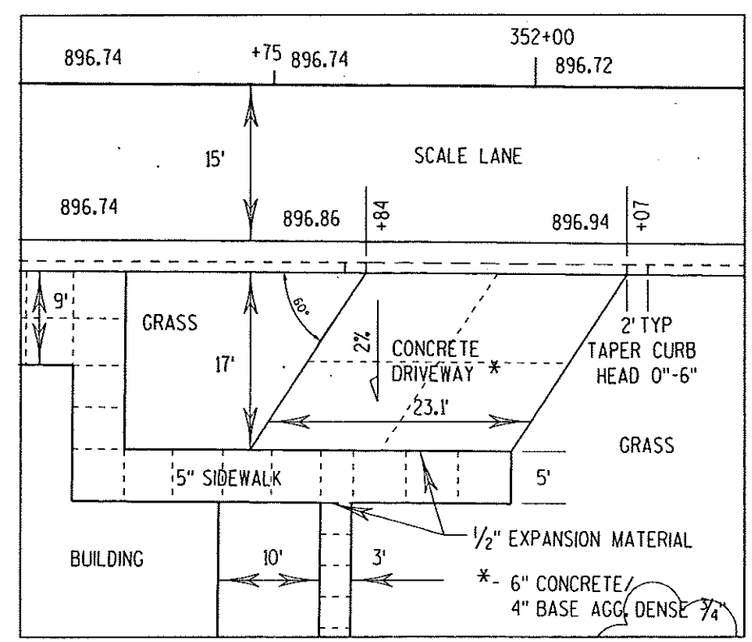

CONCRETE DRIVEWAY DETAIL

STATE PROJECT NUMBER: 1002-02-72	HWY: IH 39/90	COUNTY: DANE	DETAILS	SCALE:	SHEET NO: 6	E

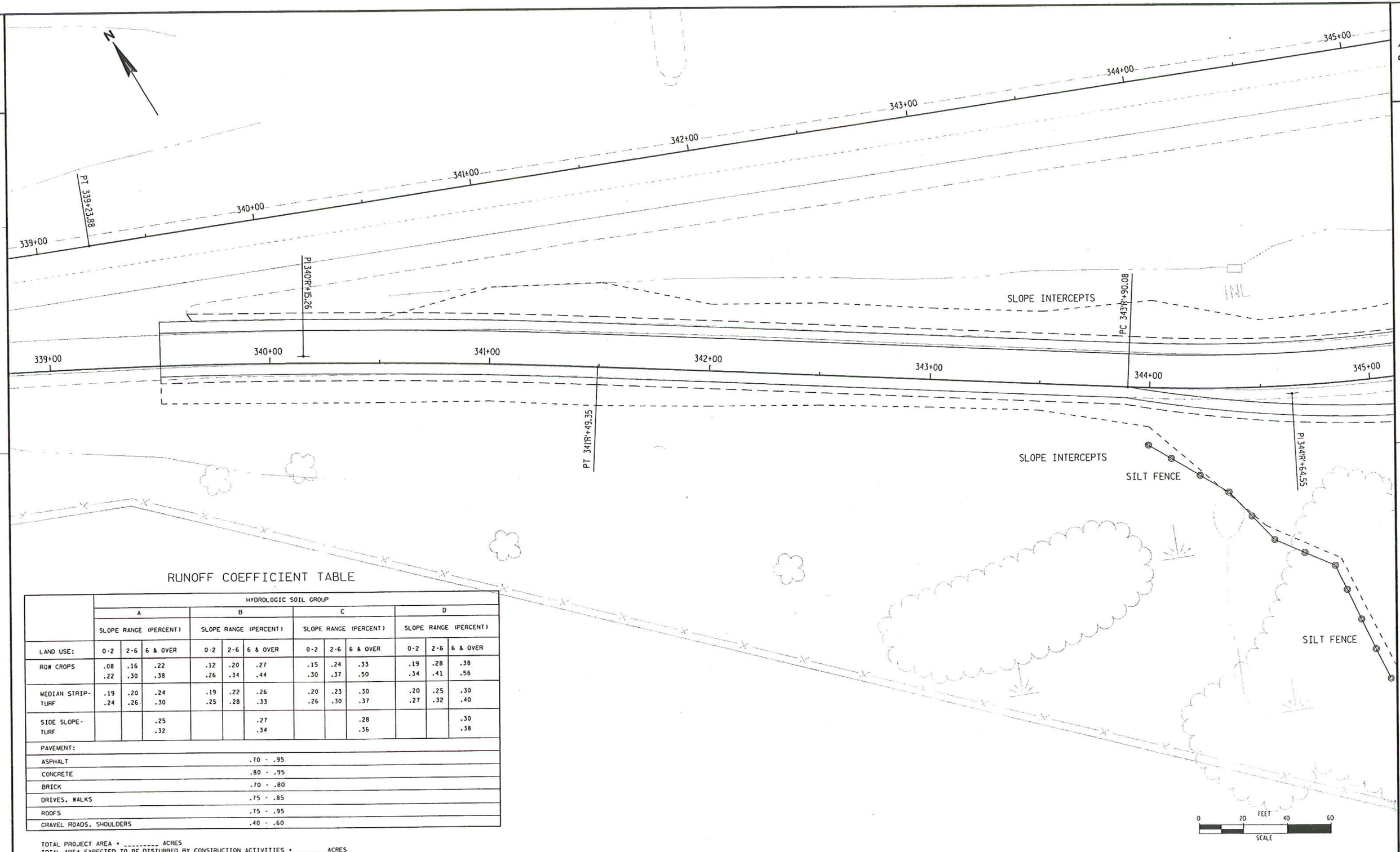

RUNOFF COEFFICIENT TABLE

	HYDROLOGIC SOIL GROUP											
	A			B			C			D		
	SLOPE RANGE (PERCENT)			SLOPE RANGE (PERCENT)			SLOPE RANGE (PERCENT)			SLOPE RANGE (PERCENT)		
LAND USE:	0-2	2-6	6 & OVER	0-2	2-6	6 & OVER	0-2	2-6	6 & OVER	0-2	2-6	6 & OVER
ROW CROPS	.08 .22	.16 .30	.22 .38	.12 .26	.20 .34	.27 .44	.15 .30	.24 .37	.33 .50	.19 .34	.28 .41	.38 .56
MEDIAN STRIP-TURF	.19 .24	.20 .26	.24 .30	.19 .25	.22 .28	.26 .33	.20 .26	.23 .30	.30 .37	.20 .27	.25 .32	.30 .40
SIDE SLOPE-TURF			.25 .32			.27 .34			.28 .36			.30 .38
PAVEMENT:												
ASPHALT	.70 - .95											
CONCRETE	.80 - .95											
BRICK	.70 - .80											
DRIVES, WALKS	.75 - .85											
ROOFS	.75 - .95											
GRAVEL ROADS, SHOULDERS	.40 - .60											

TOTAL PROJECT AREA = _____ ACRES
TOTAL AREA EXPECTED TO BE DISTURBED BY CONSTRUCTION ACTIVITIES = _____ACRES

PROJECT NO: 1002-02-72	HWY: IH 39/90	COUNTY: DANE	EROSION CONTROL PLAN	SHEET NO: 7	E

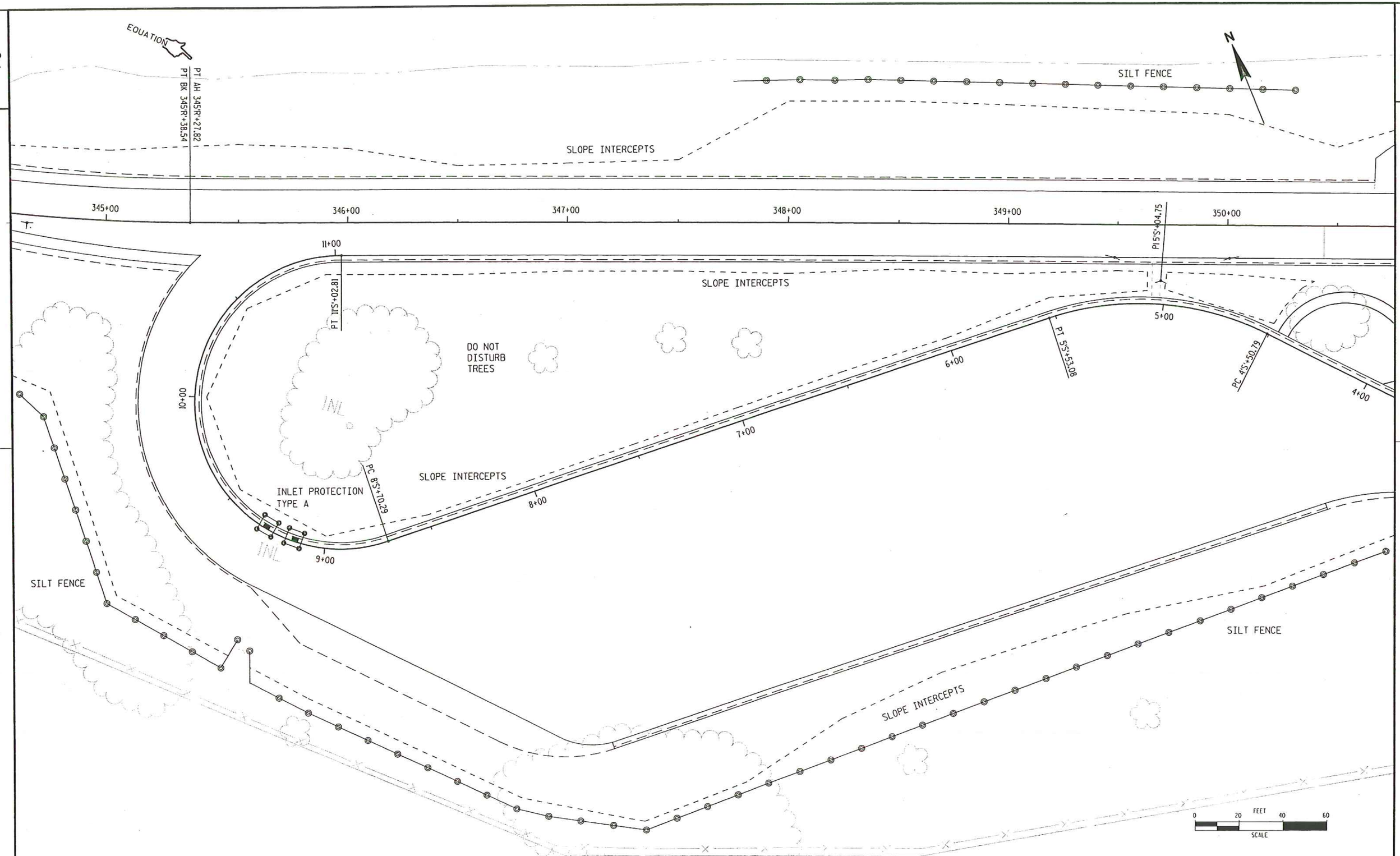

PROJECT NO: 1002-02-72	HWY: IH 39/90	COUNTY: DANE	EROSION CONTROL PLAN	SHEET NO: 8	E

FILE NAME : c:\Users\PJDe\SWEF16\ErosionControl2.DGN PLOT DATE : 28-FEB-2006 12:56 PLOT BY : DOTRES PLOT NAME: ErosionControl2.dgn PLOT SCALE : 40:1

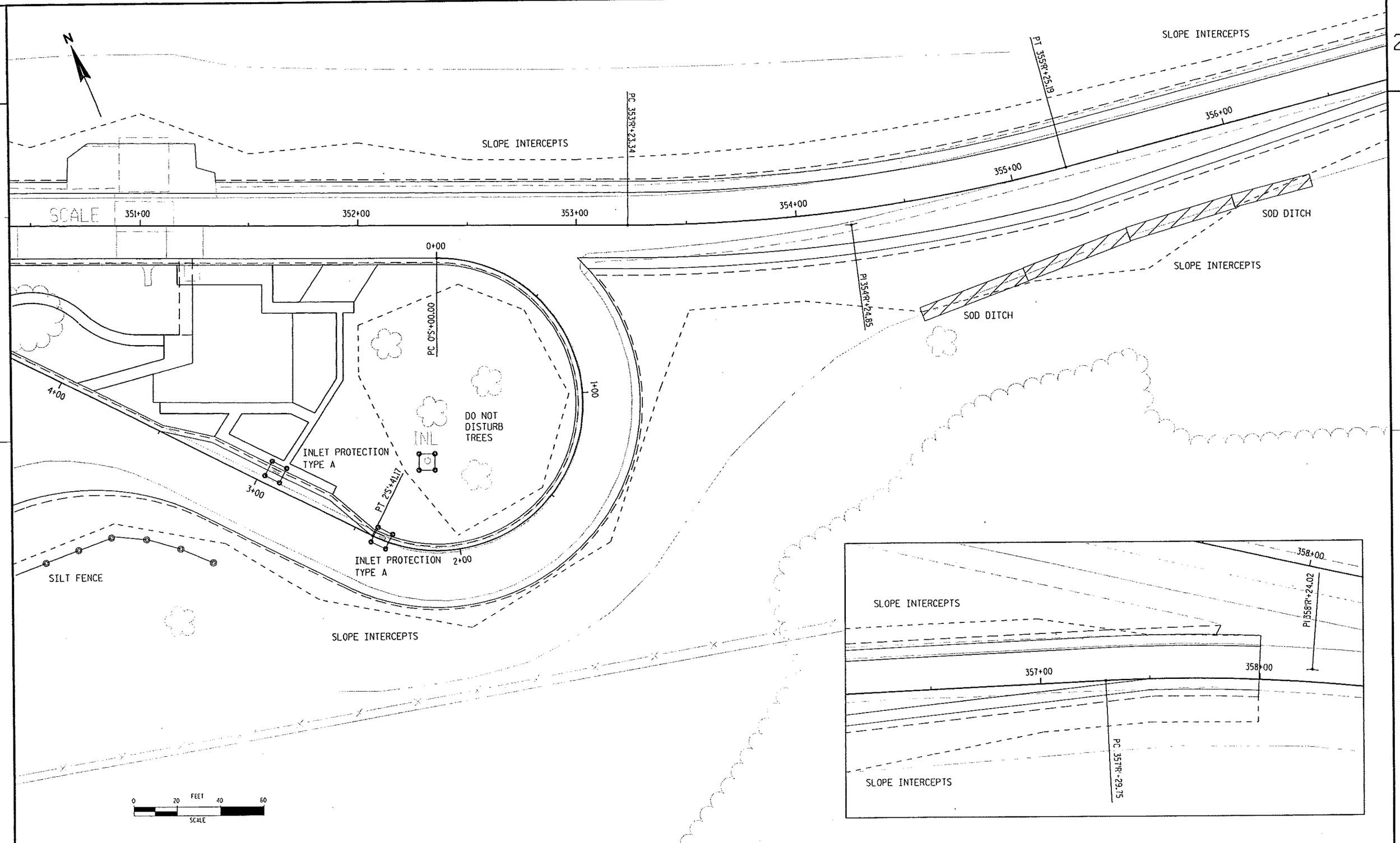

PROJECT NO: 1002-02-72	HWY: IH 39/90	COUNTY: DANE	EROSION CONTROL PLAN	SHEET NO: 9	E

FILE NAME : c:\Users\P\De\SWEF16\ErosionControl3.DGN PLOT DATE : 28-FEB-2006 12:58 PLOT BY : DOTRES PLOT NAME: ErosionControl3.dgn PLOT SCALE : 40:1

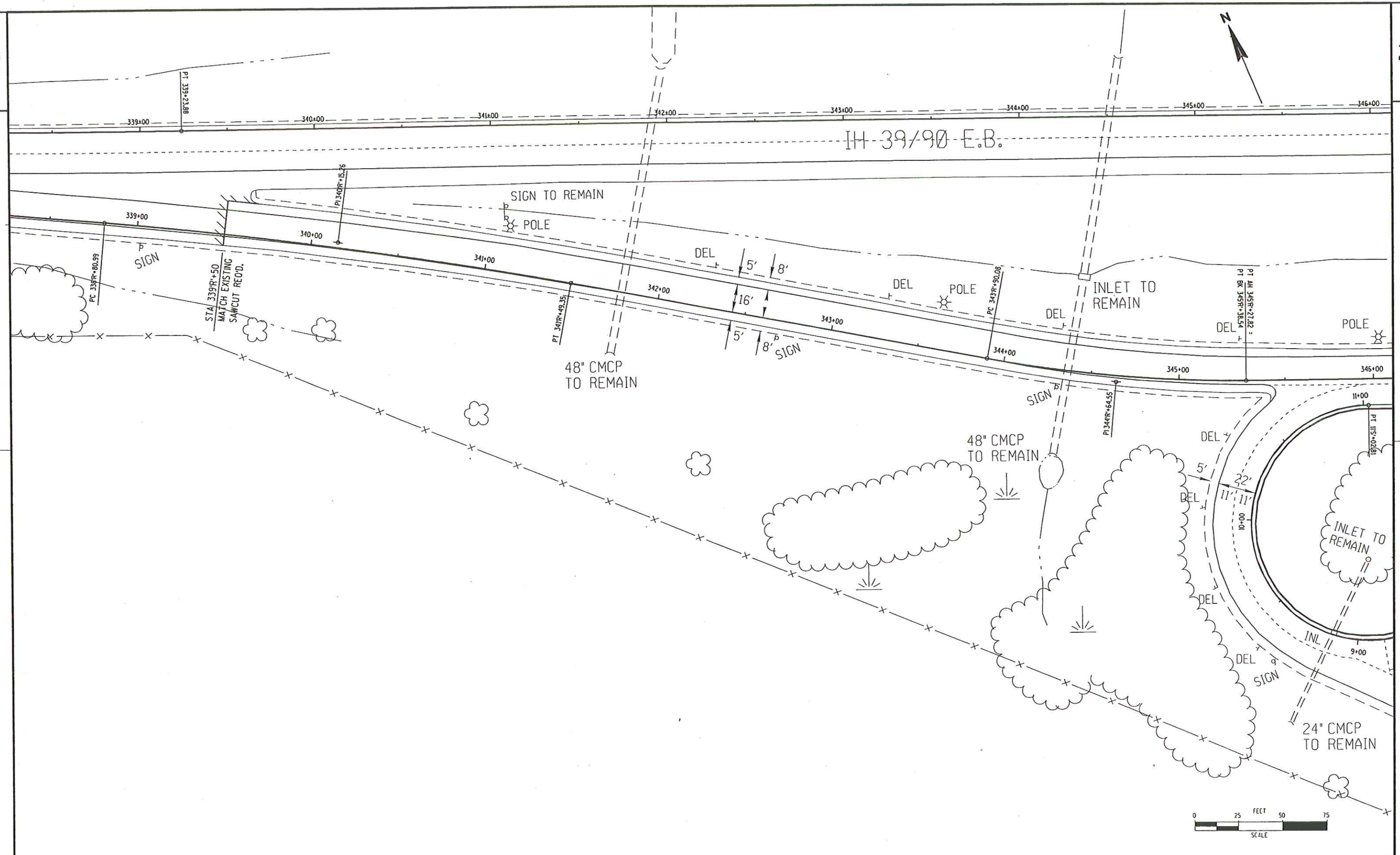
N
IH 39/90 E.B.
339+00
340+00
341+00
342+00
343+00
344+00
345+00
346+00
PT 339+23.88
PI 340R+15.26
PC 338R+80.99
STA 339R+50
MATCH EXISTING
SAWCUT REQ'D.
PT 341R+49.35
PC 343R+90.08
PI 344R+64.55
PT AH 345R+27.82 =
PT BK 345R+38.54
SIGN TO REMAIN
POLE
SIGN
DEL
5'
8'
16'
48" CMCP
TO REMAIN
INLET TO
REMAIN
POLE
11+00
10+00
9+00
PT 11+S+02.61
22'
11'
INLET TO
REMAIN
INL
24" CMCP
TO REMAIN
0
25
50
75
FEET
SCALE

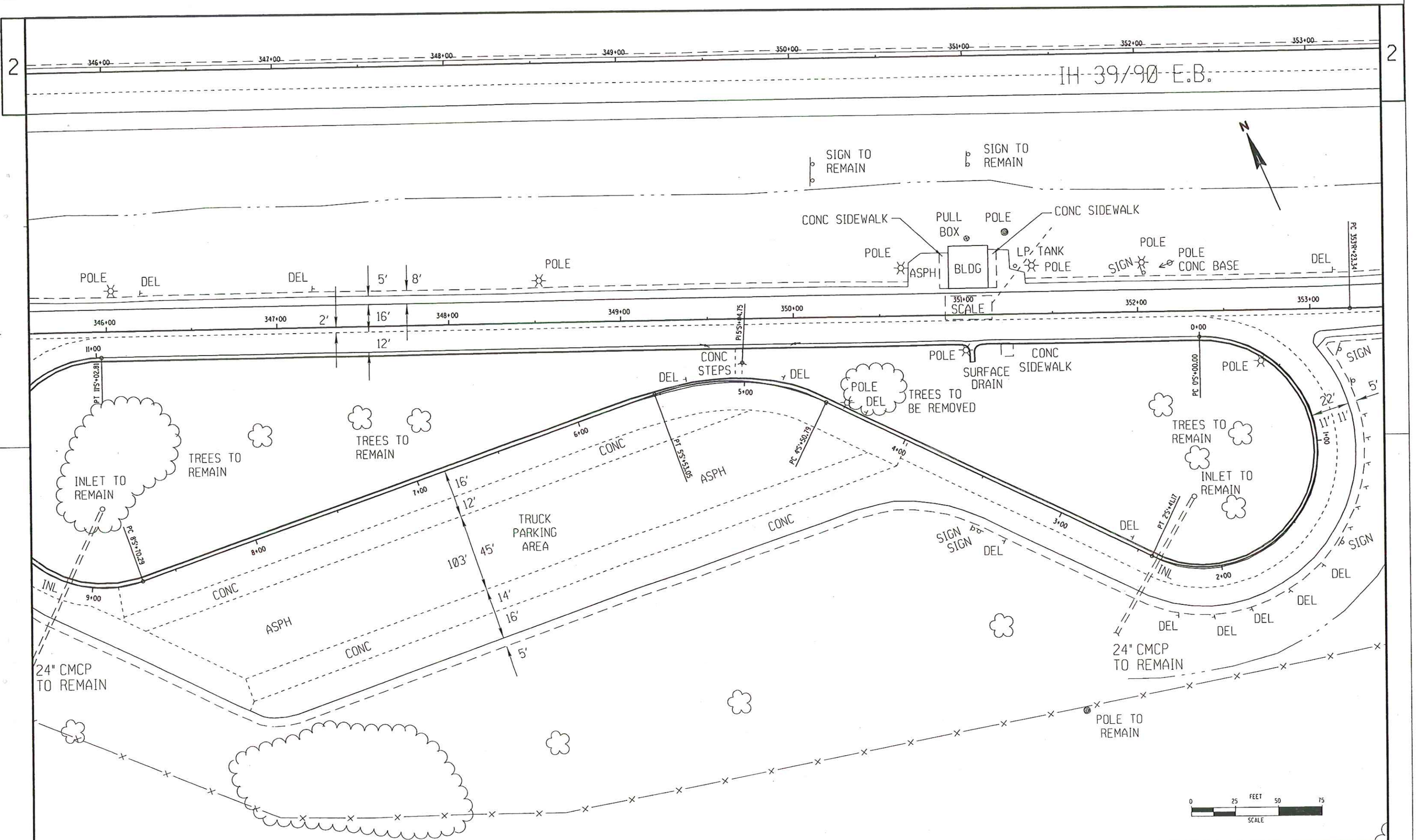

PROJECT NO: 1002-02-72	HWY: IH 39/90	COUNTY: DANE	REMOVAL PLAN	SHEET NO: 11	E

FILE NAME : c:\Users\PADe\SWEF15\Detail-Removals2.DGN PLOT DATE : 28-FEB-2026 13:01 PLOT BY : DOTRES PLOT NAME: REMOVALS2.dgn PLOT SCALE : 50.000000:1.000000

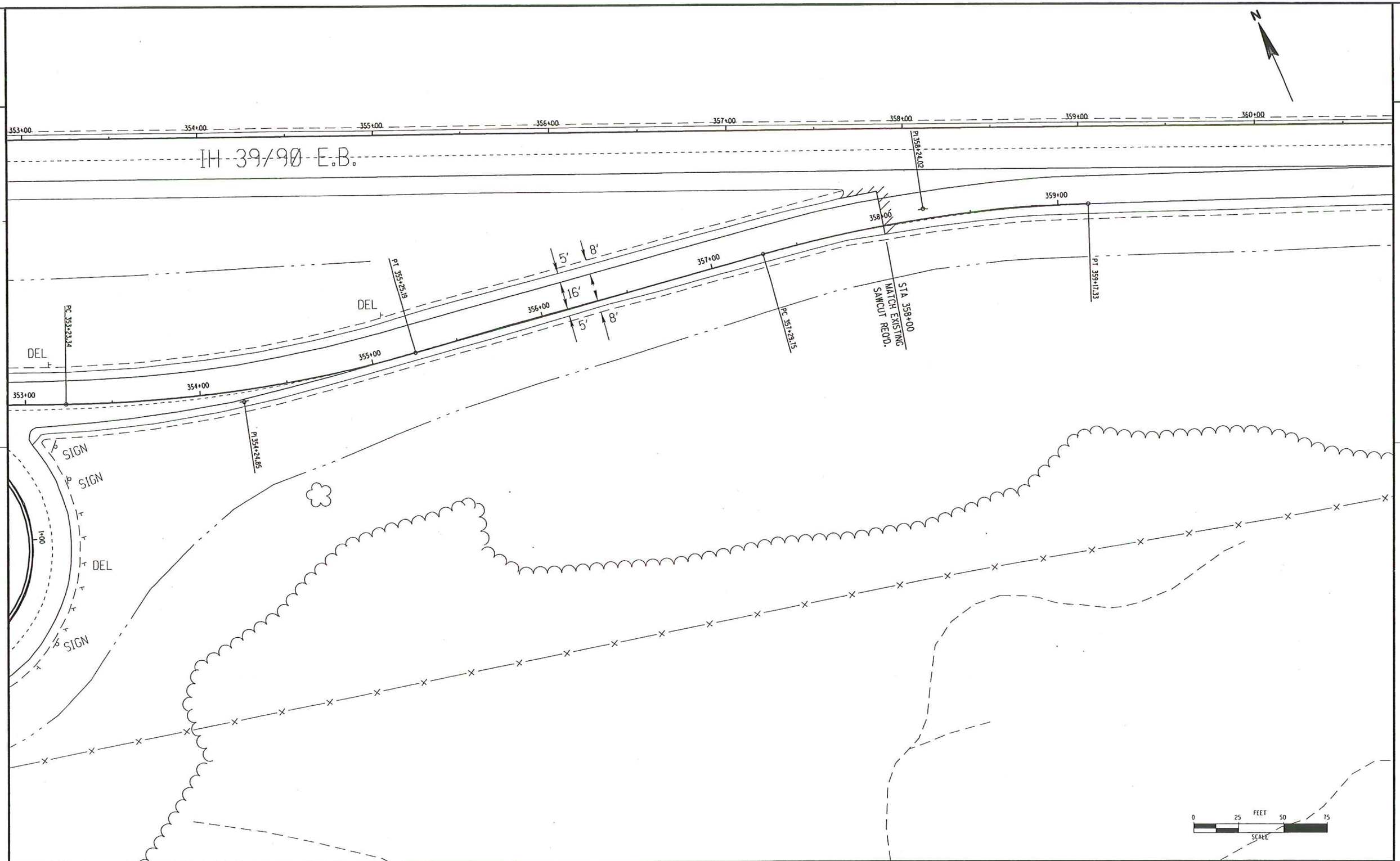

PROJECT NO: 1002-02-72	HWY: IH 39/90	COUNTY: DANE	REMOVAL PLAN	SHEET NO: 12	E

EXISTING SCALE BUILDING PLANS

FOR INFORMATIONAL PURPOSES ONLY

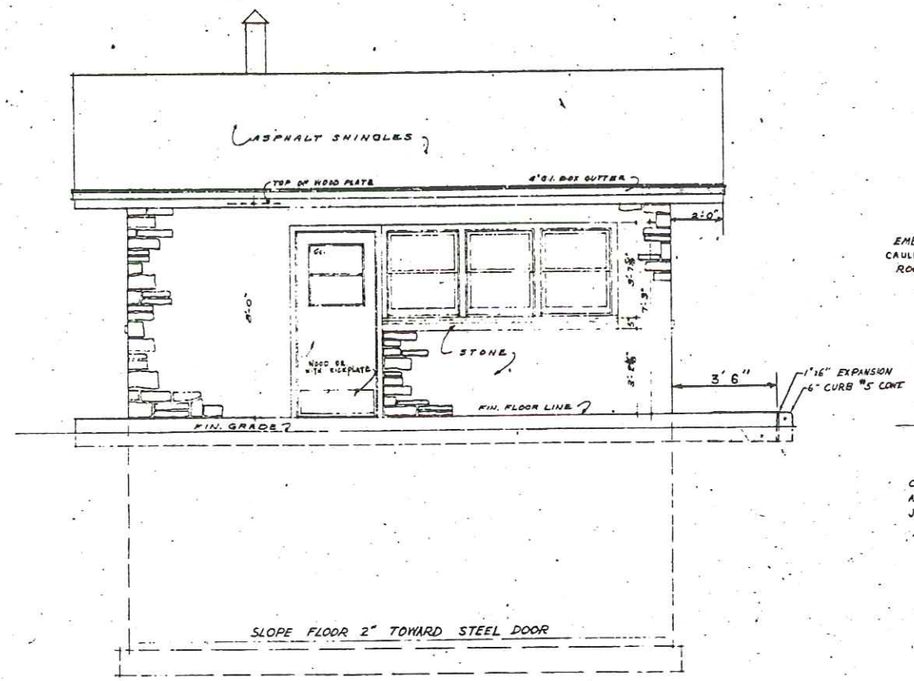

SIDE ELEVATION

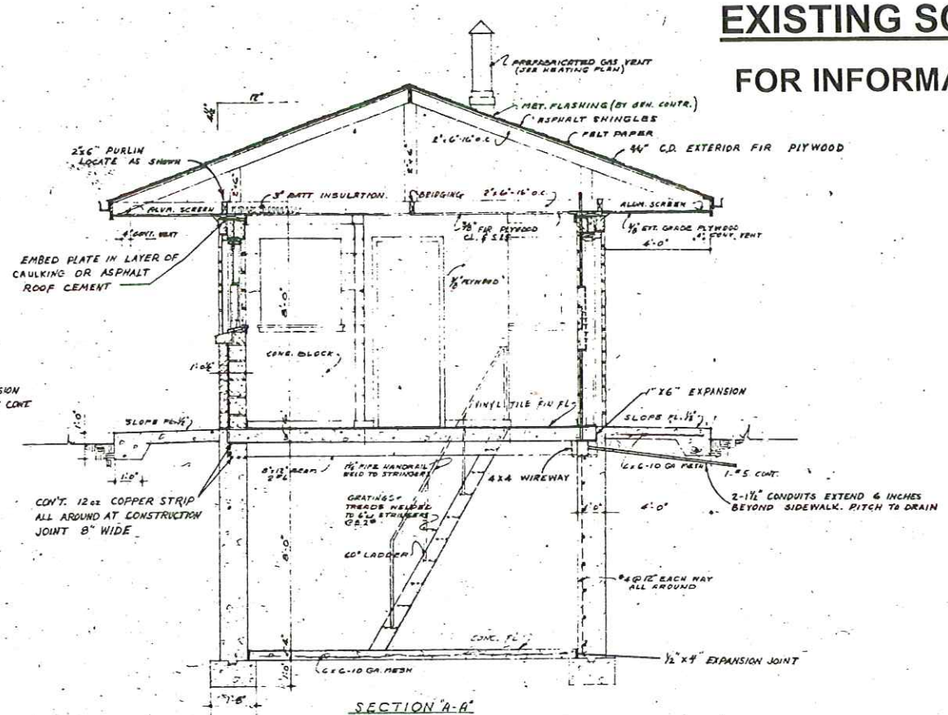

SECTION "A-A"

SYMBOLS

- INCANDESCENT LIGHT OUTLET
- FLUORESCENT LIGHT OUTLET
- CONVENIENCE OUTLET - GR. TYPE
- S WALL SWITCH
- JUNCTION BOX
- MOTOR SINGLE PHASE
- PUBLIC TELEPHONE OUTLET

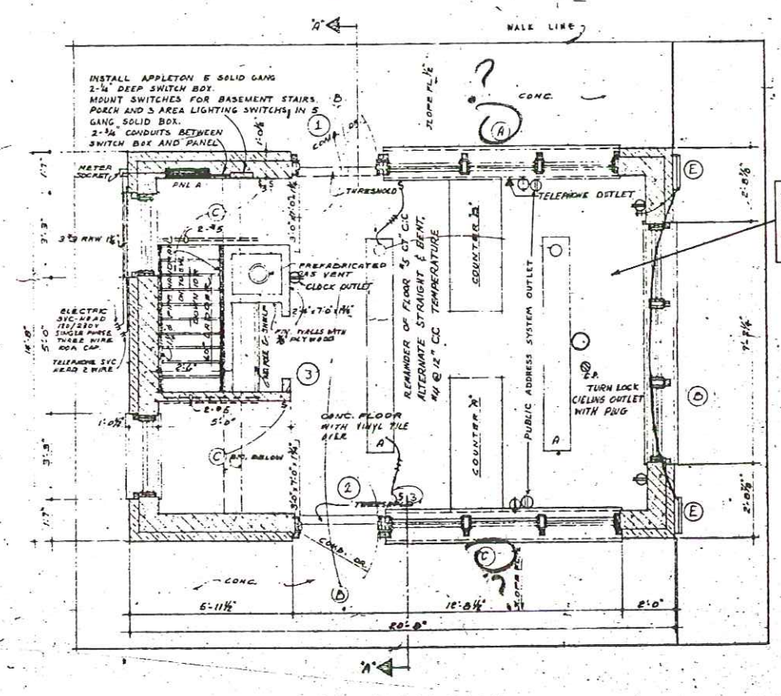

FIRST FLOOR PLAN

FRONT 8' OF FLOOR TO HAVE #5 @ 4 1/2" CC ALTERNATE STRAIGHT AND BENT #4 @ 12" TEMPERATURE

SCALE 3/8" = 1'-0"

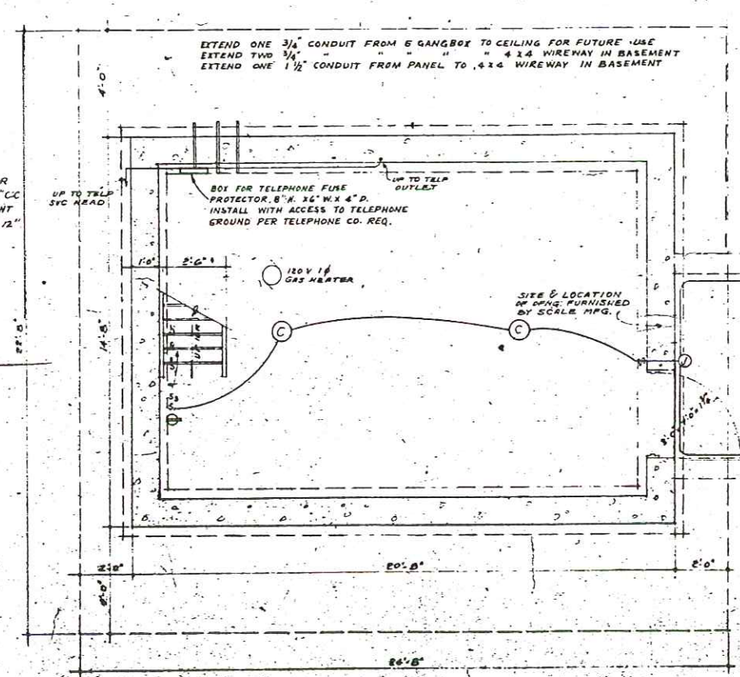

BASEMENT PLAN

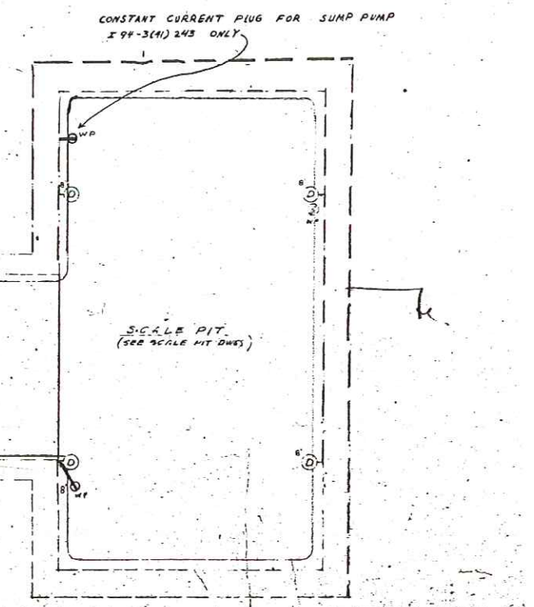

SCALE HOU.

STATE PROJECT NUMBER: 1002-02-72	HWY: IH 39/90	COUNTY: DANE	BUILDING & SCALE REMOVAL DETAILS	SCALE:	SHEET NO: 13	E

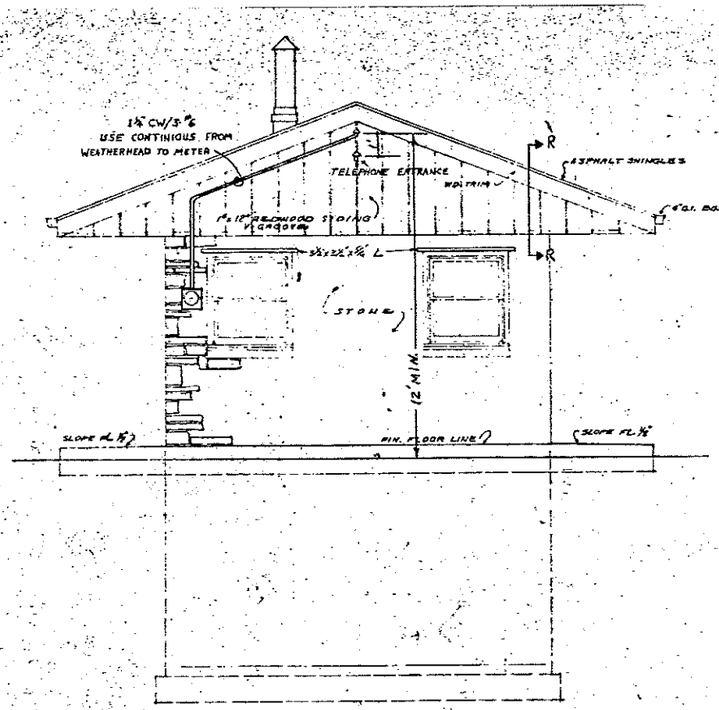

END ELEVATION

SCALE 3/8"=1'-0"

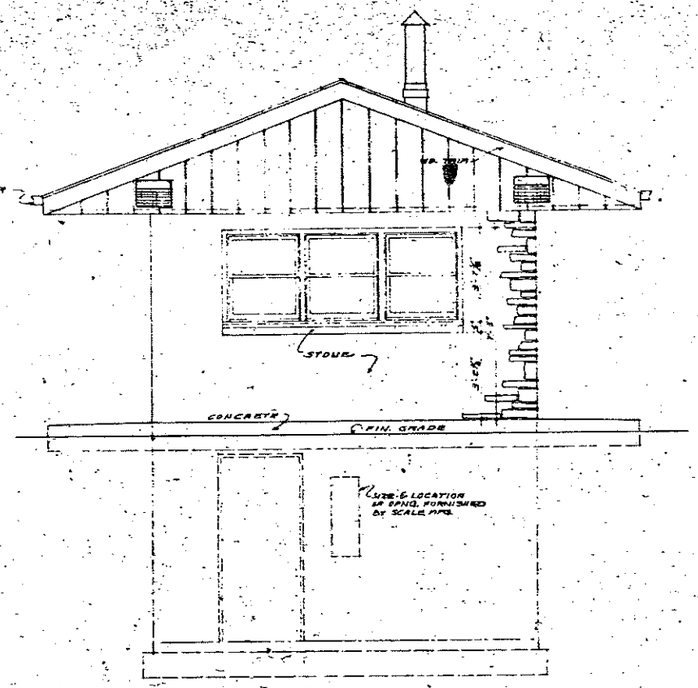

END ELEVATION

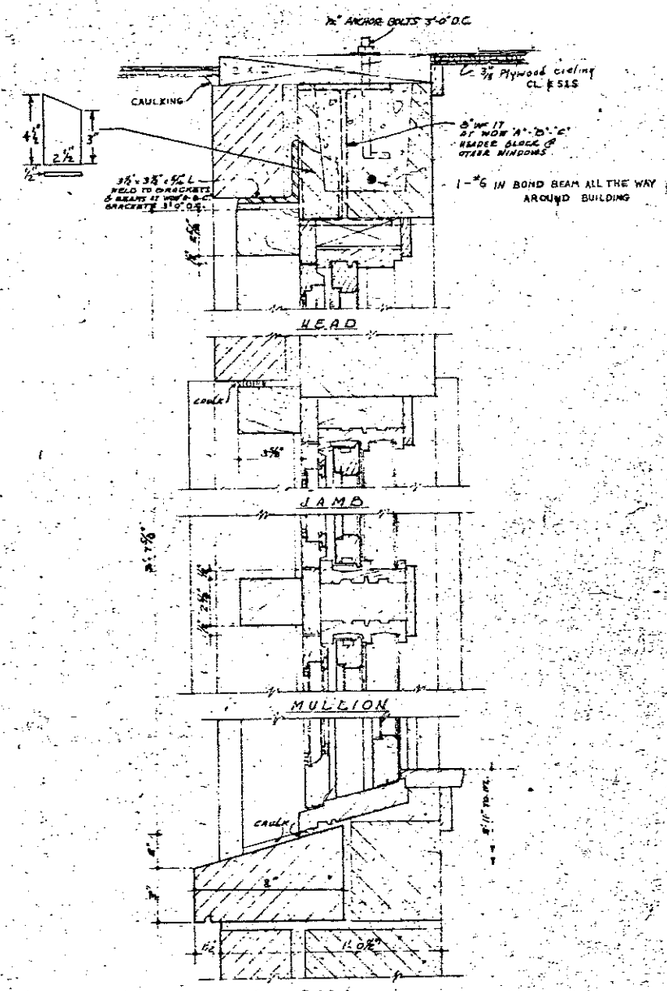

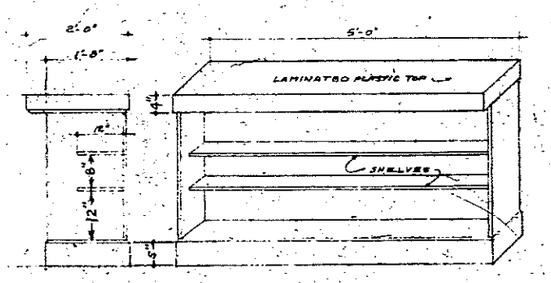

SIDE ELEV. BACK ELEV.

COUNTER "A"

NO SCALE

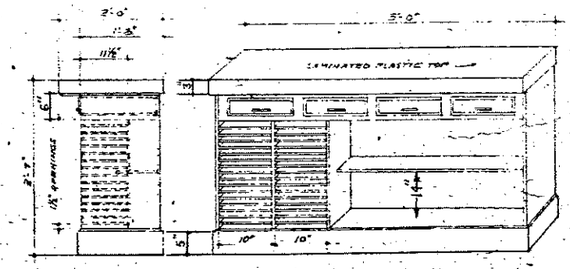

SIDE ELEV. BACK ELEV.

COUNTER "B"

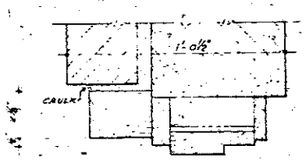

JAMB

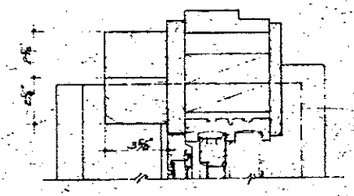

MULLION

DOOR AND WINDOW DETAILS

SCALE 3"=1'-0"

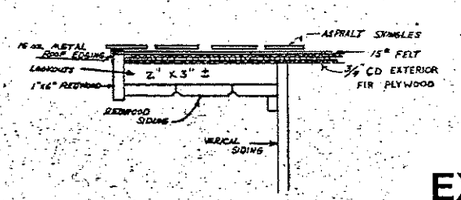

SECTION "R-R"

EXISTING SCALE BUILDING PLANS

FOR INFORMATIONAL PURPOSES ONLY

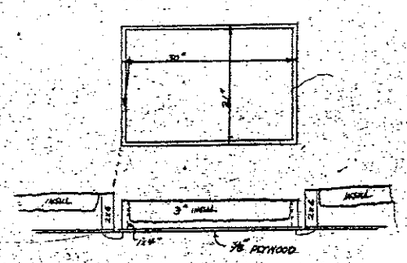

OPENING TO SUMMIT

SCALE HOUSE

STATE PROJECT NUMBER: 1002-02-72	HWY: IH 39/90	COUNTY: DANE	BUILDING & SCALE REMOVAL DETAILS	SCALE:	SHEET NO: 14	E

BILL OF BARS

7880#

DIMENSIONS IN BENDING DETAILS ARE OUT TO OUT

MARK	NO.	SIZE	LENGTH	SPACING	LOCATION	DET.
S1	36	8	26-6	10	SLAB - LONG - TOP & BOTTOM	
S2	35	4	14-6	1-6	" TRANS " "	
S3	157	4	2-0	1-0	DOWELS	A
S4	12	6	14-6	6	SLAB - TRANS AT BRG. SEATS	
S5	10	4	2-0	1-0	DOWELS - BUTTRESS	A
W1	157	4	8-9	1-0	WALLS - VERTICAL	
W2	13	7	26-6	SHOWN	" - HORIZ	
W3	14	7	10-0	"	" " AT BUTTRESS	
W4	8	5	13-3	"	" "	A
W5	44	5	10-0	"	" "	A
W6	24	5	14-0	"	" "	
W7	101	4	3-3	1-0	END CORBELS	B
W8	26	7	11-0	SHOWN	WALLS - HORIZ	
W9	4	4	13-0	"	INSIDE CORBEL	
W10	26	5	13-0	SHOWN	WALLS - HORIZ	A
W11	24	5	7-9	"	" " SAME SPACING AS W8	
W12	4	4	10-0	"	INSIDE CORBEL	
W13	3	4	8-0	"	HEADER	
W14	3	4	8-9	1-0	BUTTRESS	C
W15	4	4	11-9	1-0	"	D
W16	1	4	12-3	SHOWN	"	D
W17	1	4	10-9	1-0	"	C
W18	1	4	12-9	1-0	"	C
W19	18	6	5-0	6	DECK	
W20	6	5	6-6	9	"	
W21	2	4	25-0	SHOWN	INSIDE CORBEL	

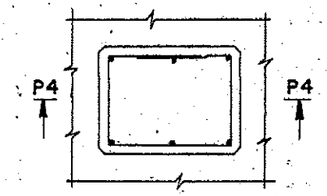

TYPICAL BEARING SEAT REINF.

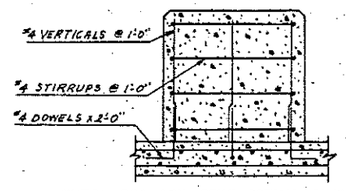

NOTE: BRG. SEAT REINF. DETAILS - SHOWN ABOVE ARE TYPICAL. FOR EXACT SIZE AND LOCATION OF BRG. SEATS SEE DETAILS BY SCALE MANUFACTURER.

SECTION P4

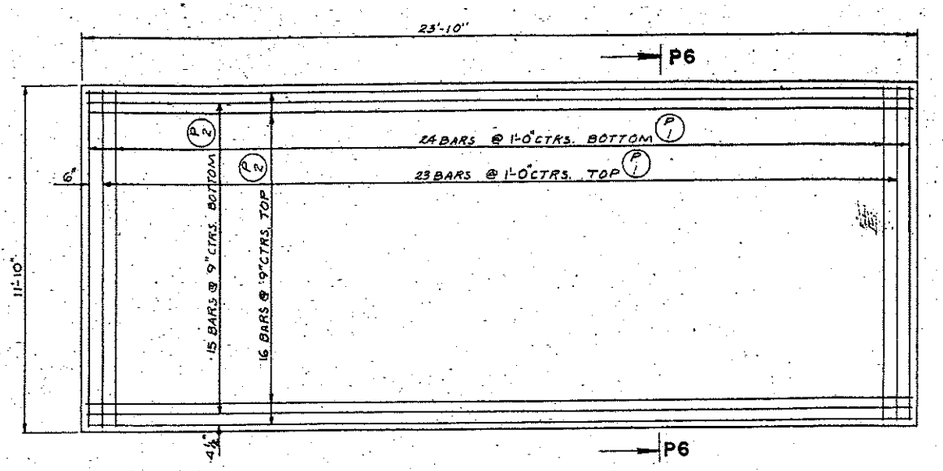

PLAN VIEW

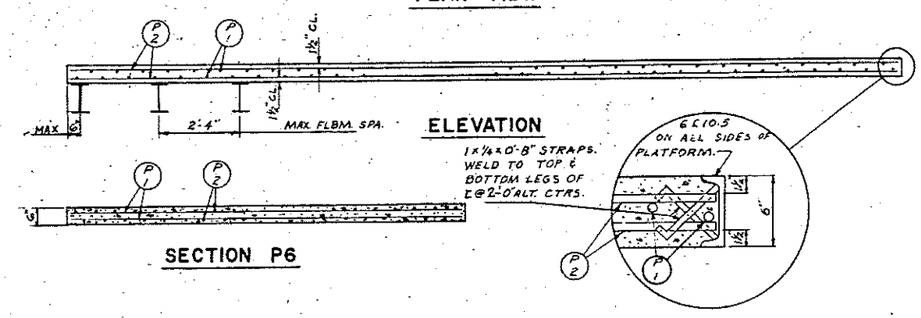

ELEVATION

SECTION P6

BILL OF BARS

1,120#

MARK	NO.	SIZE	LENGTH	SPACING
P1	47	4	11'-6"	1-0
P2	31	5	23'-6"	9

ESTIMATED PLATFORM QUANTITIES

CONCRETE MASONRY	5.2 C.Y.
BAR STEEL REINFORCEMENT	1,120 LB.
STRUCTURAL CARBON STEEL	790 LB.

PLATFORM DETAILS

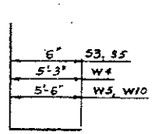

DETAIL A

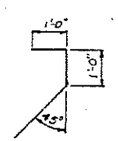

DETAIL B

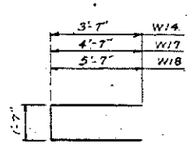

DETAIL C

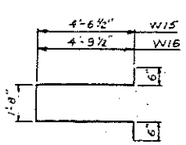

DETAIL D

EXISTING SCALE PIT PLANS

FOR INFORMATIONAL PURPOSES ONLY

STATE PROJECT NUMBER: 1002-02-72	HWY: IH 39/90	COUNTY: DANE	BUILDING & SCALE REMOVAL DETAILS	SCALE:	SHEET NO: 15	E

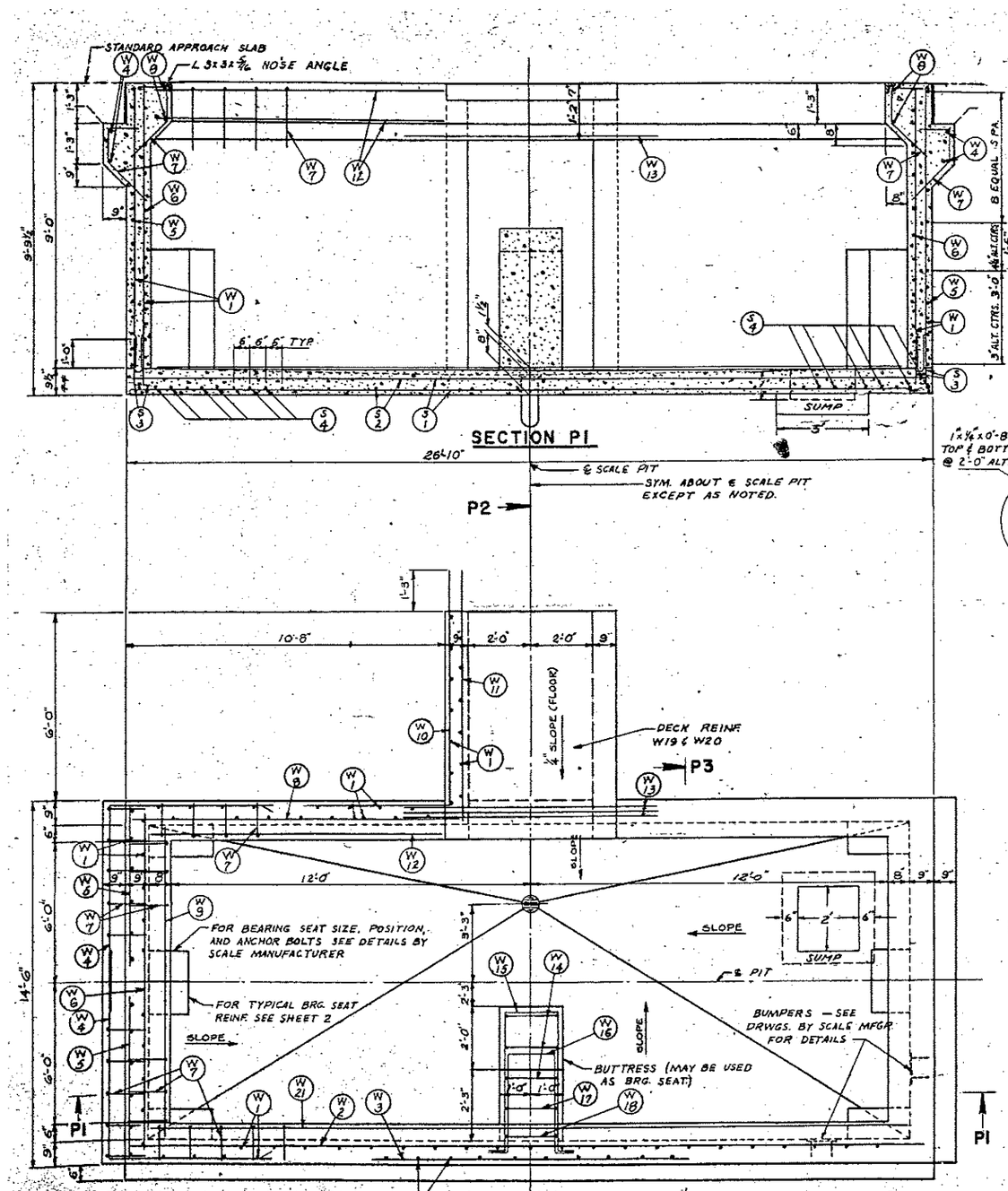

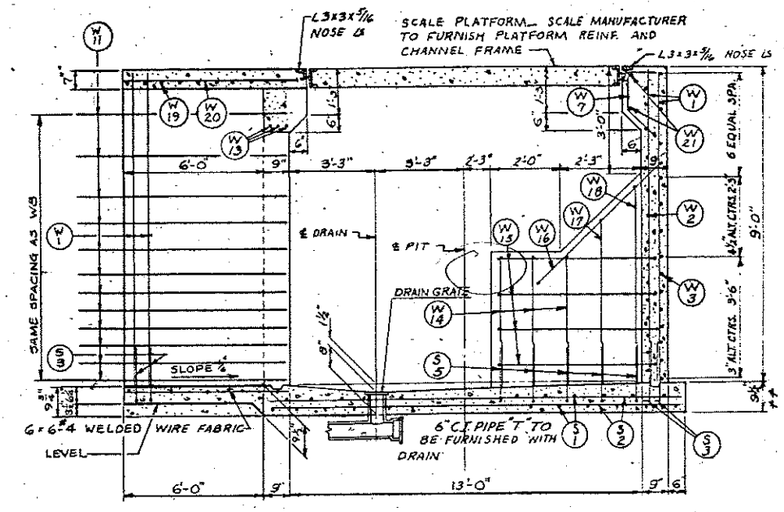

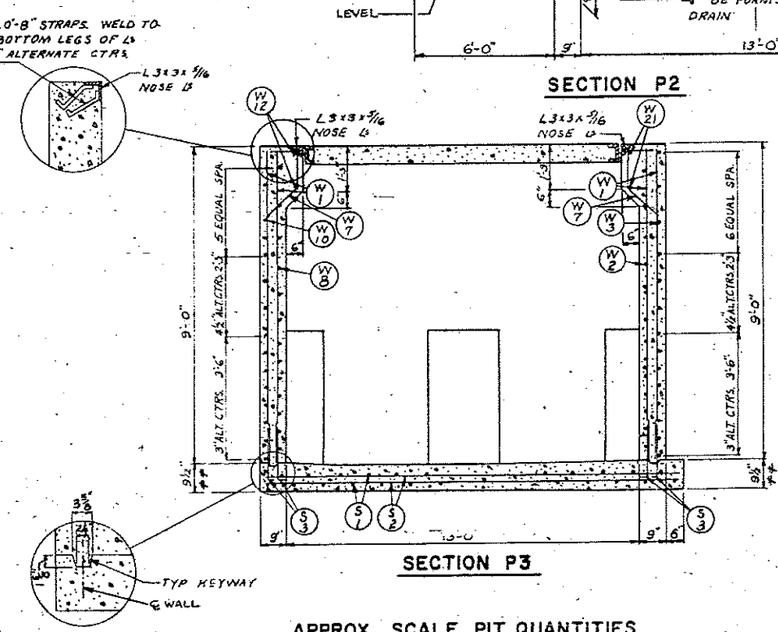

GENERAL NOTES

DRAWINGS SHALL NOT BE SCALED.
CONCRETE MASONRY SHALL BE GRADE AA.
BAR STEEL REINFORCEMENT SHALL BE IMBEDDED 2" CLEAR UNLESS OTHERWISE SHOWN OR NOTED.

BUMPERS SHALL BE FURNISHED BY SCALE MFGR.
ALL OTHER STRUCTURAL STEEL SHALL BE FURNISHED BY SCALE PIT CONTRACTOR.
SLOPE TO AN 8" THICKNESS AT DRAIN.

LOADING:

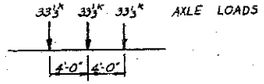

APPROX. SCALE PIT QUANTITIES

*EXCAVATION FOR STRUCTURES	220 C.Y.
*CONCRETE MASONRY	39.5 C.Y.
**BAR STEEL REINFORCEMENT	7880 LB.
STRUCTURAL CARBON STEEL	480 LB.
STEEL FABRIC REINFORCEMENT	3.5 S.Y.
FLOOR DRAINS	1 EA.

* FROM TOP OF APPROACH SLAB.
* HOUSE FLOOR AND BRG. SEATS NOT INCLUDED.
** BRG. SEAT REINF. NOT INCLUDED

EXISTING SCALE PIT PLANS

FOR INFORMATIONAL PURPOSES ONLY

STATE PROJECT NUMBER: 1002-02-72	HWY: IH 39/90	COUNTY: DANE	BUILDING & SCALE REMOVAL DETAILS	SCALE:	SHEET NO: 16	E

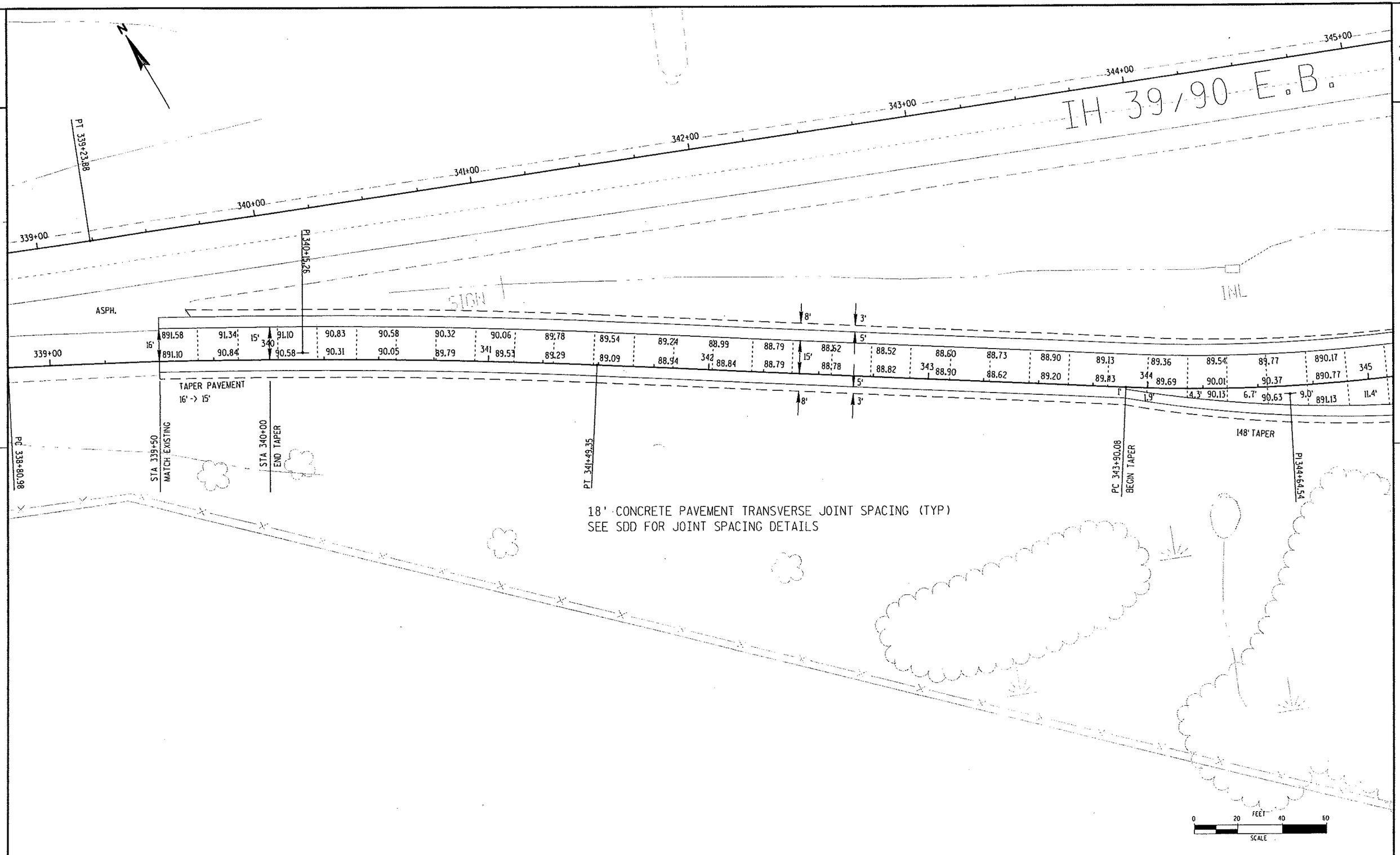

PROJECT NO: 1002-02-72	HWY: IH 39/90	COUNTY: DANE	PAVEMENT GRADES	SHEET NO: 17	E

FILE NAME : c:\Users\P\De\SWEF16\PavtGrades1.dgn PLOT DATE : 28-FEB-2006 13:07 PLOT BY : DOTRES PLOT NAME : PavtGrades1.dgn PLOT SCALE : 40:1

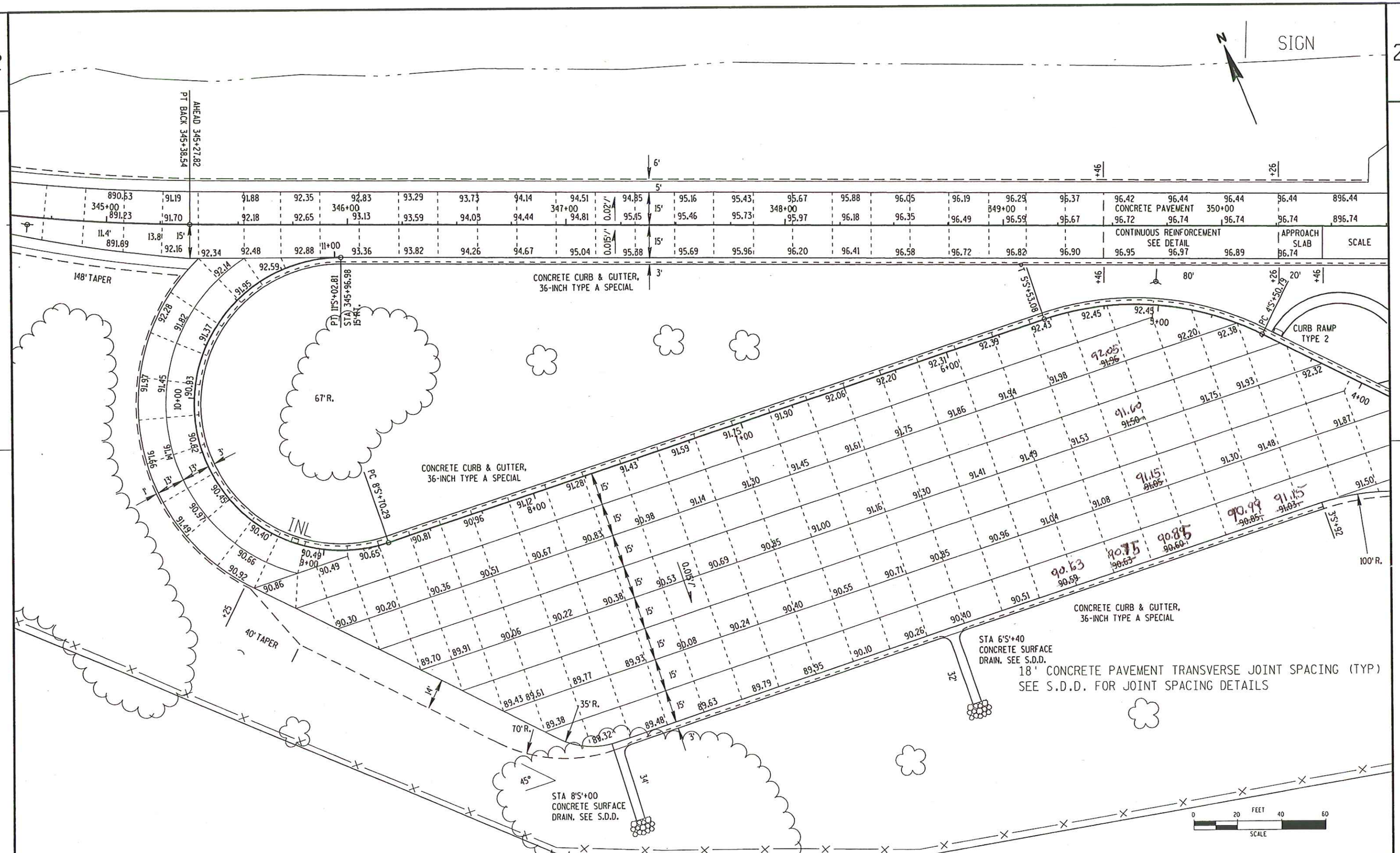

PROJECT NO: 1002-02-72	HWY: IH 39/90	COUNTY: DANE	PAVEMENT GRADES	SHEET NO: 18	E

FILE NAME : c:\Users\P\De\SWEF16\PavtGrades2.dgn PLOT DATE : 16-MAR-2006 17:13 PLOT BY : DOTRES PLOT NAME: PavtGrades2.dgn PLOT SCALE : 40.000000:1.000000

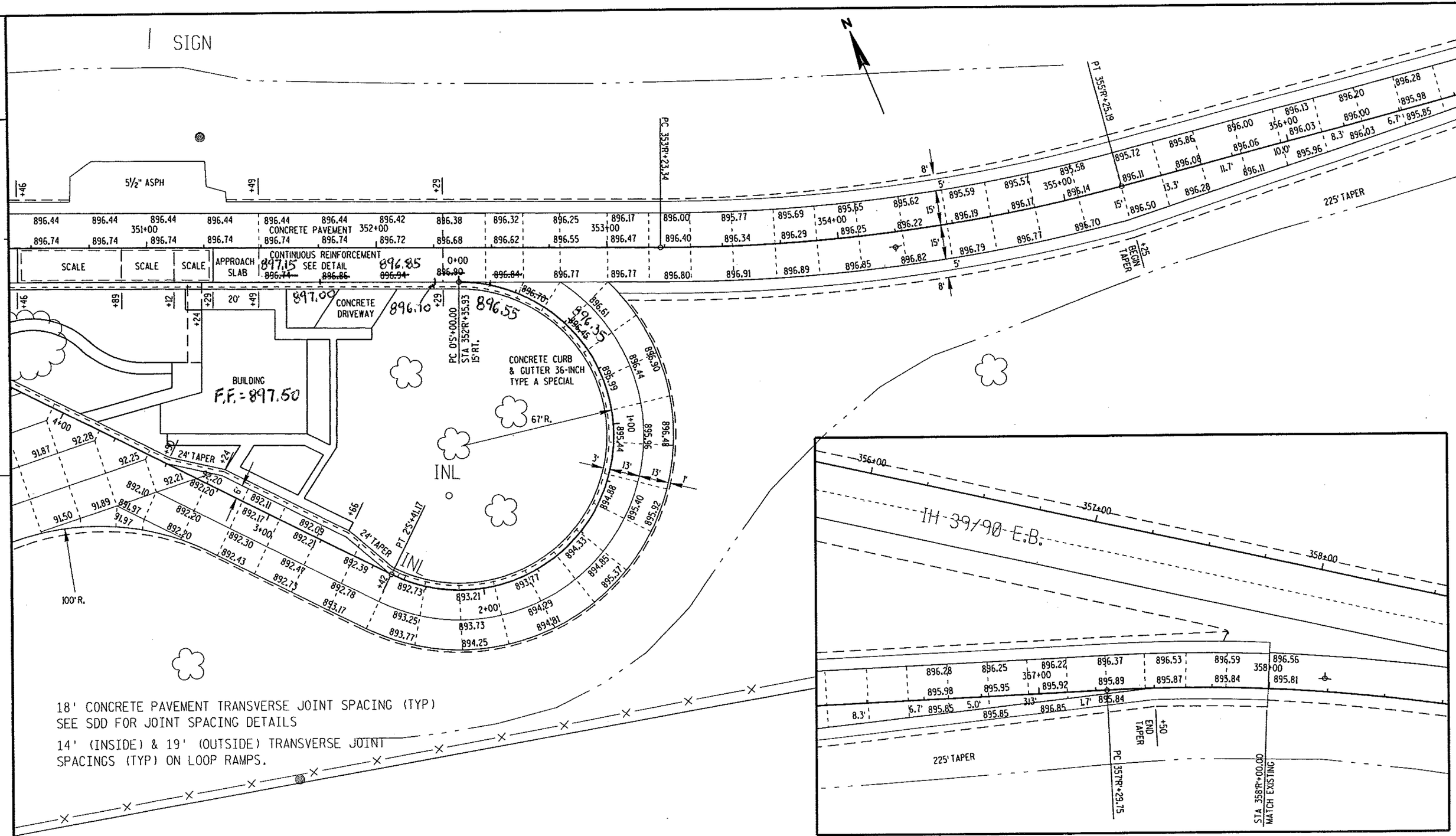

PROJECT NO: 1002-02-72	HWY: IH 39/90	COUNTY: DANE	PAVEMENT GRADES	SHEET NO: 19	E

FILE NAME : c:\Users\P\De\SWEF16\PavtGrades3.dgn PLOT DATE : 16-MAR-2006 17:22 PLOT BY : DOTRES PLOT NAME: PavtGrades3.dgn PLOT SCALE : 40.000000:1.000000

STATE OF WISCONSIN
DEPARTMENT OF TRANSPORTATION

PLAN OF PROPOSED IMPROVEMENT

SAFETY & WEIGHT FACILITY NO. 16
I-39/90
DANE COUNTY

FINAL P S & E

STATE PROJECT NUMBER
1002-02-72

STANDARD ABBREVIATIONS

AB ANCHOR BOLT
A/C AIR CONDITIONING
AFF ABOVE FINISHED FLOOR
ALUM ALUMINUM
ALT ALTERNATE
AP ACCESS PANEL
ASPH ASPHALT
BD BOARD
BLDG BUILDING
BM BEAM, BENCH MARK
BO BY OTHERS
BRG BEARING
BS BOTH SIDES
BTM BOTTOM
CF CUBIC FEET
CJ CONSTRUCTION JOINT
CLG CEILING
CLJ CONTROL JOINT
CMU CONCRETE MASONRY UNIT
CO CLEANOUT
COL COLUMN
CONC CONCRETE
CONT CONTINUE, CONTINUOUS
CONTR CONTRACT(OR)
CPT CARPET(ED)
CR CURB RAMP
CT CERAMIC TILE
CY CUBIC YARD

DF DRINKING FOUNTAIN
DIA DIAMETER
DIM DIMENSION
DN DOWN
DR DOOR, DRAIN
DS DOWN SPOUT
DTL DETAIL DW
DISHWASHER DWG
DRAWING

EA EACH
EL ELEVATION
ELEC ELECTRIC(AL)
EPDM THYLENE, PROPYLENE, DIENE TERPOLYMER
EPS EXTRUDED POLYSTYRENE INSULATION
EQUIP EQUIPMENT
EW EACH WAY
EWC ELECTRIC WATER COOLER
EXH EXHAUST
EXIST EXISTING
EXP EXPOSED, EXPANSION
EXT EXTERIOR

FAC FIRE ACCESS CABINET
FD FLOOR DRAIN
FE FIRE EXTINGUISHER
FIN FINISH FLR FLOOR
FLUR FLUORESCENT
FNDTN FOUNDATION
FT FOOT
FTG FOOTING, FITTING

G GAS
GA GAUGE
GALV GALVANIZED
GC GENERAL CONTRACT(OR)
GL GLASS, GLAZING
GYP GYPSUM

HDWR HARDWARE
HGT HEIGHT
HM HOLLOW METAL
HORIZ HORIZONTAL
HTG HEATING
HVAC HEATING/VENTILATING/AIR CONDITIONING
HW HOT WATER
HYD HYDRANT

ID INSIDE DIAMETER
IE INVERT ELEVATION
IN INCH
INCL INCLUDE(D), INCLUDING
INSUL INSULATE(D), INSULATION
INT INTERIOR

JT JOINT

LAV LAVATORY
LF LINEAR FOOT
LL LIVE LOAD

MAX MAXIMUM
MB MOP BASIN
MECH MECHANICAL
MJ MOVEMENT JOINT
MIN MINIMUM
MISC MISCELLANEOUS
MO MASONRY OPENING
MTL METAL

NIC NOT IN CONTRACT
NO NUMBER
NOM NOMINAL
NTS NOT TO SCALE

OC ON CENTER
OD OUTSIDE DIAMETER
OH OVERHEAD, OVERHANG
OPNG OPENING

PART PARTITION
PCF POUNDS PER CUBIC FOOT
PKT POCKET
PLAS PLASTIC
PLBG PLUMBING
PLF POUNDS PER LINEAL FOOT
PNL PANEL
POLY POLYETHYLENE
PROP PROPERTY
PSF POUNDS PER SQUARE FOOT
PSI POUNDS PER SQUARE INCH
PT PRESSURE TREATED
PTD PAINT(ED)
PVC POLYVINYL CHLORIDE
PVMT PAVEMENT

QT QUARRY TILE

R RADIUS, RISER
RA RETURN AIR
RD ROOF DRAIN
REF REFRIGERATOR
REINF REINFORCING
REQD REQUIRED
REV REVISE, REVISION
RM ROOM
RO ROUGH OPENING

SA SUPPLY AIR
SF SQUARE FOOT
SH SHELF, SHELVING, SHOWER
SHT SHEET
SIM SIMILAR
SQ SQUARE
SS STAINLESS STEEL
STC SOUND TRANSMISSION COEFFICIENT
STD STANDARD
STL STEEL
SUSP SUSPENDED
SY SQUARE YARD

T TREAD
TEL TELEPHONE
THK THICK(NESS)
TOF TOP OF FOOTING
TOS TOP OF STEEL
TOW TOP OF WALL
TYP TYPICAL

VB VAPOR BARRIER
VCT VINYL COMPOSITION TILE
VERT VERTICAL

W WATER
W/ WITH
WD WOOD
W/O WITHOUT
WP WATERPROOF(ING)
WSCT WAINSCOT
WWF WELDED WIRE FABRIC

∠ ANGLE
℄ CENTERLINE
ϕ DIAMETER
⊞ PLATE

SECTIONS AND DETAILS

PARTIAL SECTIONS CUT ON PLANS, ETC. ARE SHOWN AS FOLLOWS:

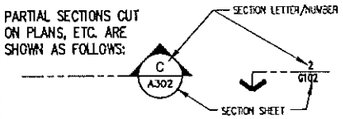

BUILDING SECTIONS CUT ON PLANS, ETC. ARE SHOWN AS FOLLOWS:

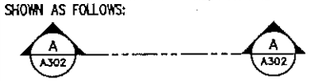

INTERIOR ELEVATIONS SHOWN AS FOLLOWS:

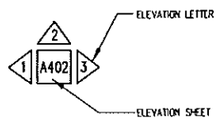

DETAILS OF SPECIFIC ITEMS ON PLANS, ETC. ARE SHOWN AS FOLLOWS:

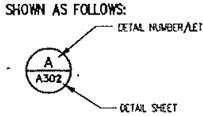

SPECIFIC DETAILS ARE SHOWN ON DETAIL SHEET AS FOLLOWS:

ENLARGED DETAILS ARE SHOWN ON PLANS AS FOLLOWS:

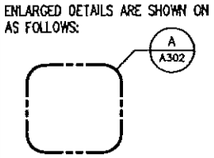

SHEET INDEX

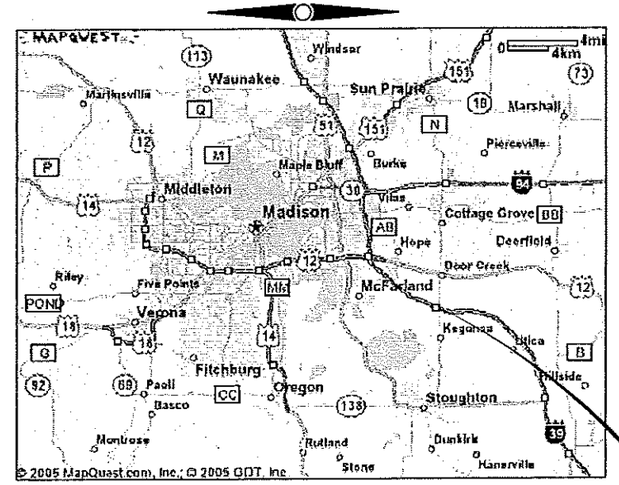

PROJECT LOCATION

SAFETY & WEIGHT FACILITY NO. 16
IN R.O.W. OF EAST BOUND I39-90
TOWN OF PLEASANT SPRINGS, WI

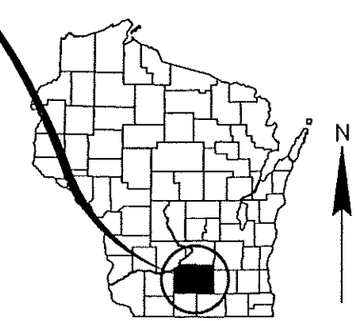

STATE OF WISCOSNIN – COUNTY MAP

GENERAL NOTES

NOTES APPLY TO ENTIRE DOCUMENT SET.

SHEET NOTES

NOTES APPLY ONLY TO SHEET.

KEYNOTES

NOTES APPLY ONLY WHERE INDICATED BY SYMBOL.

ARCHITECTURAL SYMBOLS

PLAN NORTH — PLAN NORTH
T.O.F. ELEV = 614'-0" / T.O.F. ELEV = 614'-0" — ELEVATION MARKER
100 — DOOR INDICATOR
NAME / OFFICE / 110 / NUMBER — ROOM IDENTIFIER
101'-10" — SPOT ELEVATION
4 — BORROWED LITE INDICATOR
4 — WINDOW INDICATOR
X — KEYNOTE INDICATOR
X — REVISION INDICATOR
1 — PARTITION TYPE INDICATOR
X — COLUMN REFERENCE GRID

STATE OF WISCONSIN
DEPARTMENT OF TRANSPORTATION

PREPARED BY
Surveyor _____
Designer _____
District Examiner _____
District Supervisor _____
Proj. Dev. Engineer _____
C.O. Examiner _____

APPROVED FOR DISTRICT OFFICE
DATE: _____ _____ (Signature)

FINAL P, S, & E

AUTHORIZED FOR BUREAU OF HIGHWAY DEVELOPMENT
DATE: _____ _____ (Signature)

PLANS PREPARED BY: VIERBICHER ASSOCIATES, INC. REEDSBURG, WI		VAI# 001044954	TITLE, LOCATION MAPS, DRAWING INDEX	DATE: 11/1/05	FINAL PS & E
STATE PROJECT NUMBER: 1002-02-72	HWY: I-39/90	COUNTY: DANE	MADISON SAFETY & WEIGHT FACILITY NO. 16 SCALE, FEET 0	SHEET NO: 20 OF	DWG. G001

SHEET NOTES

1. TOP OF INTERIOR MASONRY PARTITIONS AT ROOMS W/ CEILINGS 110'-8" ELEV. (TYP.). REFER TO STRUCTURAL FOR REINFORCING.
2. AT ROOMS WITHOUT SUSPENDED CEILING (OPEN TO STRUCTURE), RUN PARTITIONS FULL HEIGHT TO UNDERSIDE OF STRUCTURE, EXCEPT WHERE NOTED.
3. REFER TO ROOM FINISH SCHEDULE FOR FINISHES.

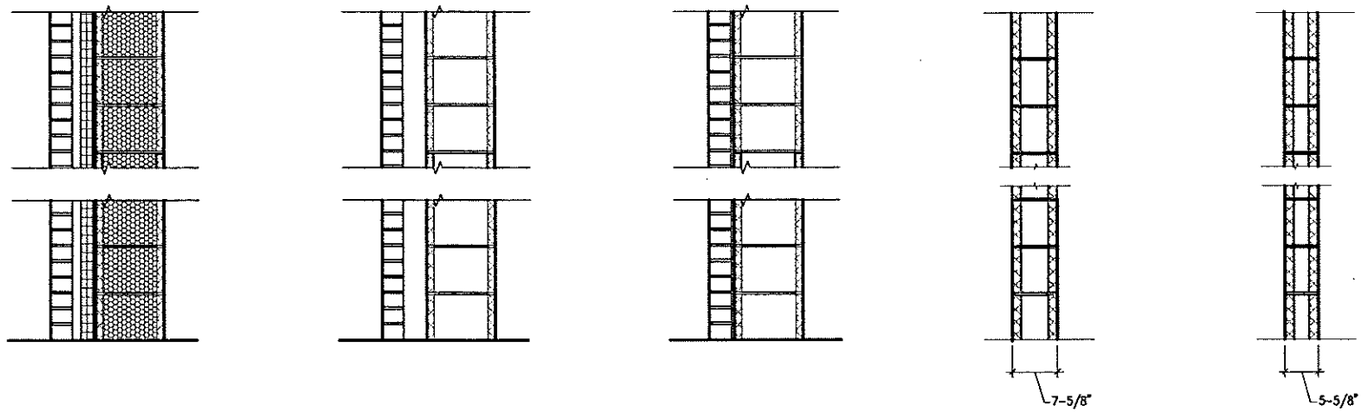

1 — ARCHITECTURAL CMU WITH 1 1/2" AIR SPACE & 2" RIGID INSULATION, 12" STRUCTURAL CMU FILLED WITH FOAMED IN PLACE

2 — ARCHITECTURAL CMU WITH 4" AIR SPACE & 12" STRUCTURAL CMU

3 — ARCHITECTURAL CMU WITH 12" CMU

4 — 8" NOMINAL CMU

4A — 8" NOMINAL CMU – 2 HR RATED

5 — 6" GROUND FACE CMU

1/G002 INTERIOR PARTITION TYPES

NO TO SCALE

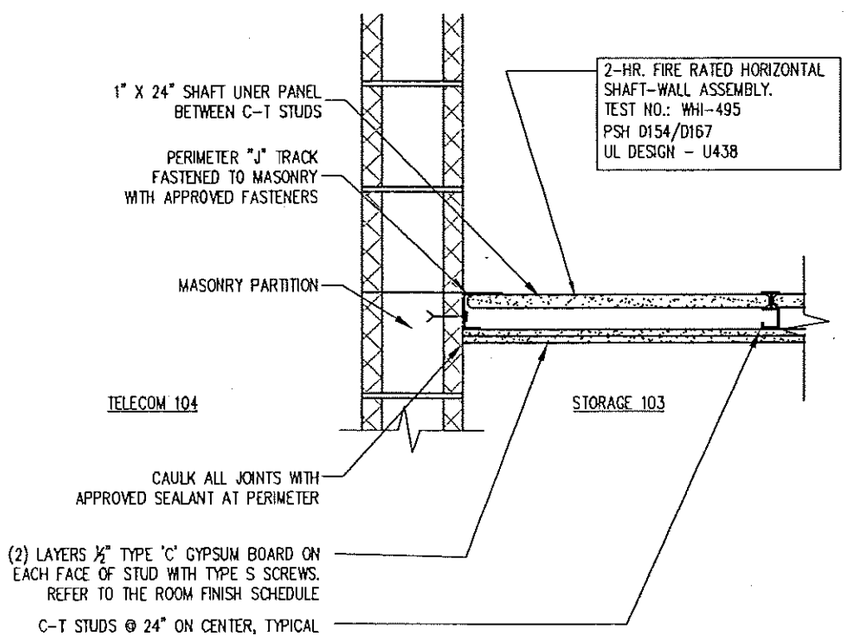

2/G002 2 HOUR RATED CEILING

1 1/2" = 1'-0"

PLANS PREPARED BY: VIERBICHER ASSOCIATES, INC. REEDSBURG, WI		VAI# 001044954	PARTITION TYPES / RATED ASSEMBLIES	DATE: 11/1/05	FINAL PS & E
STATE PROJECT NUMBER: 1002-02-72	HWY: I-39/90	COUNTY: DANE	MADISON SAFETY & WEIGHT FACILITY NO. 16	SCALE, FEET 0	SHEET NO: 21 OF / DWG. G002
				REVISION: 1	DATE: 2/2/06 BY: MER

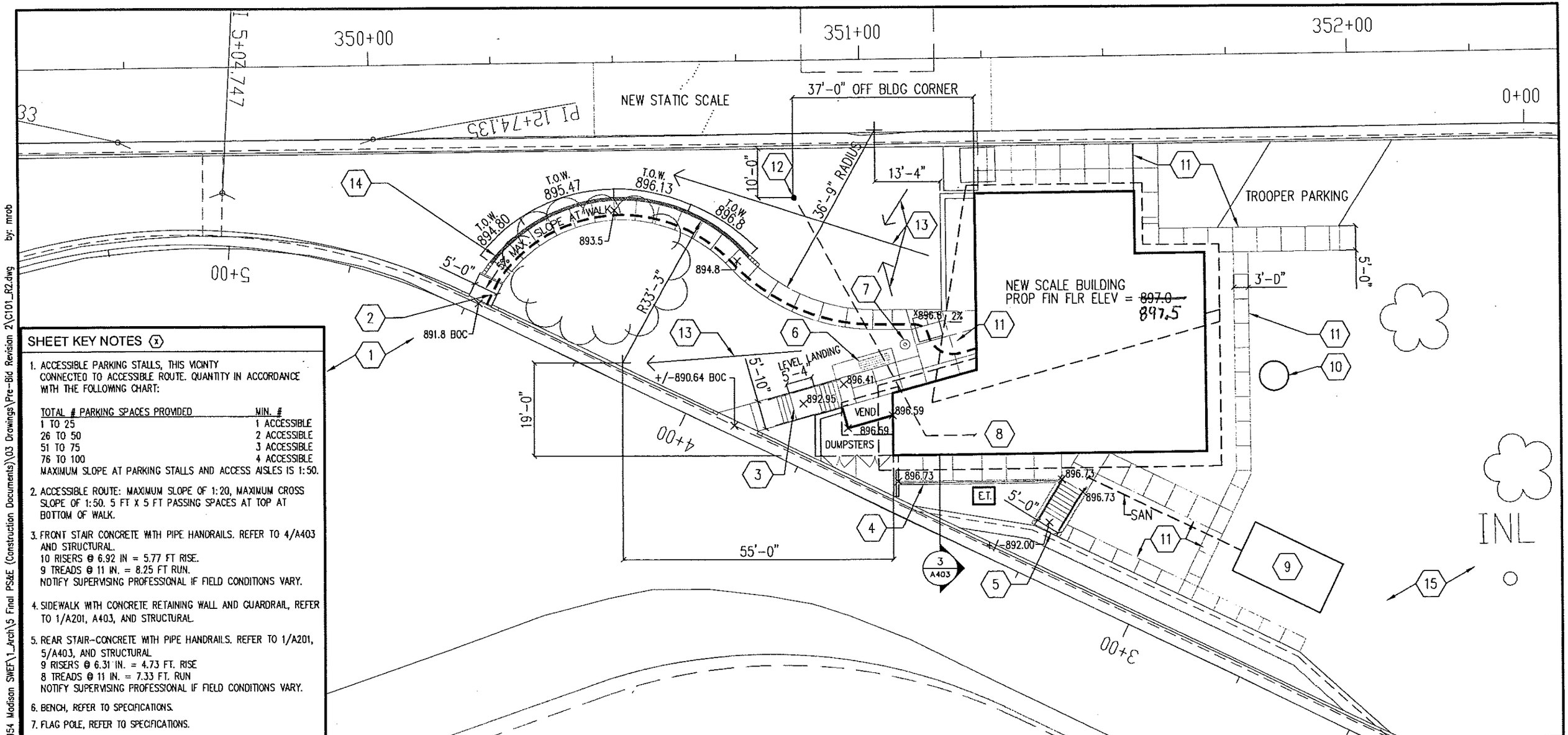

SHEET KEY NOTES (X)

1. ACCESSIBLE PARKING STALLS, THIS VICINTY CONNECTED TO ACCESSIBLE ROUTE. QUANTITY IN ACCORDANCE WITH THE FOLLOWING CHART:

TOTAL # PARKING SPACES PROVIDED	MIN. #
1 TO 25	1 ACCESSIBLE
26 TO 50	2 ACCESSIBLE
51 TO 75	3 ACCESSIBLE
76 TO 100	4 ACCESSIBLE

MAXIMUM SLOPE AT PARKING STALLS AND ACCESS AISLES IS 1:50.

2. ACCESSIBLE ROUTE: MAXIMUM SLOPE OF 1:20, MAXIMUM CROSS SLOPE OF 1:50. 5 FT X 5 FT PASSING SPACES AT TOP AT BOTTOM OF WALK.
3. FRONT STAIR CONCRETE WITH PIPE HANDRAILS. REFER TO 4/A403 AND STRUCTURAL.
   10 RISERS @ 6.92 IN = 5.77 FT RISE.
   9 TREADS @ 11 IN. = 8.25 FT RUN.
   NOTIFY SUPERVISING PROFESSIONAL IF FIELD CONDITIONS VARY.
4. SIDEWALK WITH CONCRETE RETAINING WALL AND GUARDRAIL, REFER TO 1/A201, A403, AND STRUCTURAL.
5. REAR STAIR-CONCRETE WITH PIPE HANDRAILS. REFER TO 1/A201, 5/A403, AND STRUCTURAL
   9 RISERS @ 6.31 IN. = 4.73 FT. RISE
   8 TREADS @ 11 IN. = 7.33 FT. RUN
   NOTIFY SUPERVISING PROFESSIONAL IF FIELD CONDITIONS VARY.
6. BENCH, REFER TO SPECIFICATIONS.
7. FLAG POLE, REFER TO SPECIFICATIONS.
8. PIPING FROM WELL TO PRESSURE TANK. REFER TO PLBG FOR CONTINUATION
9. PROPOSED SEPTIC HOLDING TANK AND SANITARY PIPING INTO BUILDING. REFER TO PLUMBING PLANS FOR CONTINUATION.
10. PROPOSED COMMUNICATIONS TOWER. REFER TO COMMUNICATIONS TOWER DRAWINGS/DETAILS.
11. CONCRETE SIDEWALK. REFER TO ROADWAY PLANS.
12. WELL – BUILD UP GRADE AROUND WELL, AND PROVIDE POSITIVE DRAINAGE AWAY. REFER TO DETAILS 1/C501 & 2/C501
13. INDICATES DIRECTION OF DRAINAGE. REFER TO ROADWAY PLANS.
14. MODULAR BLOCK GRAVITY RETAINING WALL. REFER TO SPECIFICATIONS AND ROADWAY DETAILS.
15. GEOTHERMAL WELLS, THIS VICINITY. REFER TO HVAC PLANS AND SPECIFICATIONS.

TRUE NORTH PLAN NORTH

1 C101 PARTIAL SITE PLAN
1" = 20'-0"

SHEET ABBREVIATIONS

T.O.W. = TOP OF RETAINING WALL
E.T. = ELECTRICAL TRANSFORMER
BOC = BOTTOM OF CURB

SHEET NOTES

THIS PLAN INCLUDES SELECTED SPOT ELEVATIONS. THESE ARE INTENDED TO COMMUNICATE THE RISE OF STAIRS AND HEIGHT OF MODULAR BLOCK GRAVITY RETAINING WALL ONLY. FIELD VERIFICATION OF THE EXISTING TOPOGRAPHY IS REQUIRED BY THE CONTRACTOR. REFER TO ROADWAY PLANS FOR SITE GRADING AND DRAINAGE.

PLANS PREPARED BY: VIERBICHER ASSOCIATES, INC. REEDSBURG, WI		VAI# 001044954	SITE PLAN	DATE: 11/1/05	FINAL PS & E
STATE PROJECT NUMBER: 1002-02-72	HWY: I-39/90	COUNTY: DANE	MADISON SAFETY & WEIGHT FACILITY NO. 16	SCALE, FEET 0	SHEET NO: 22 OF / DWG. C101

REVISION: 2 DATE: 3/2/06 BY: NER

02 Mar 2006 - 10:19a G:\DATA\arch\WISDOT 001044954 Madison SWEF\1_Arch\5 Final PS&E (Construction Documents)\03 Drawings\Pre-Bid Revision 2\C101_R2.dwg by: mrob

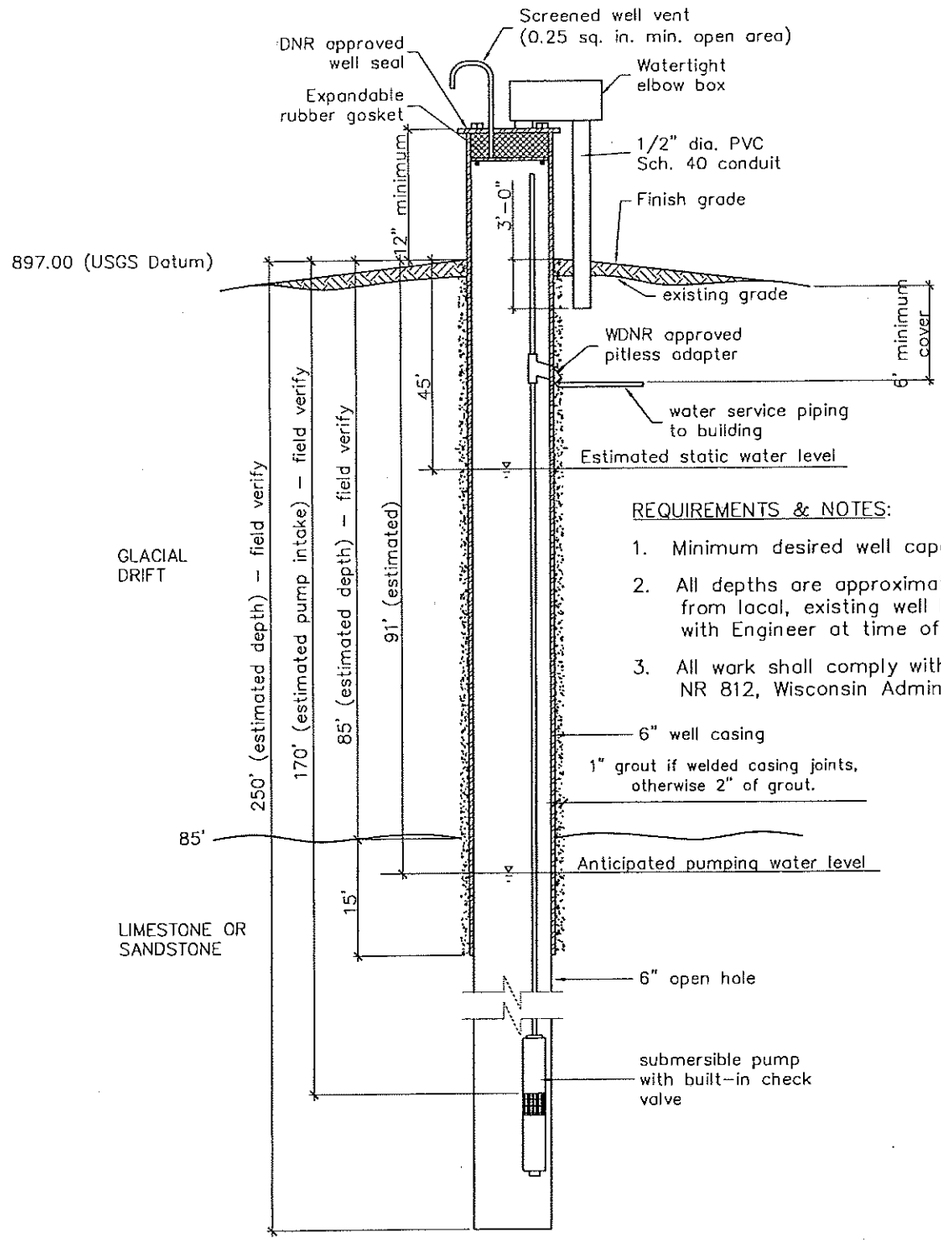

1 C501 WELL PROFILE DETAIL
NOT TO SCALE

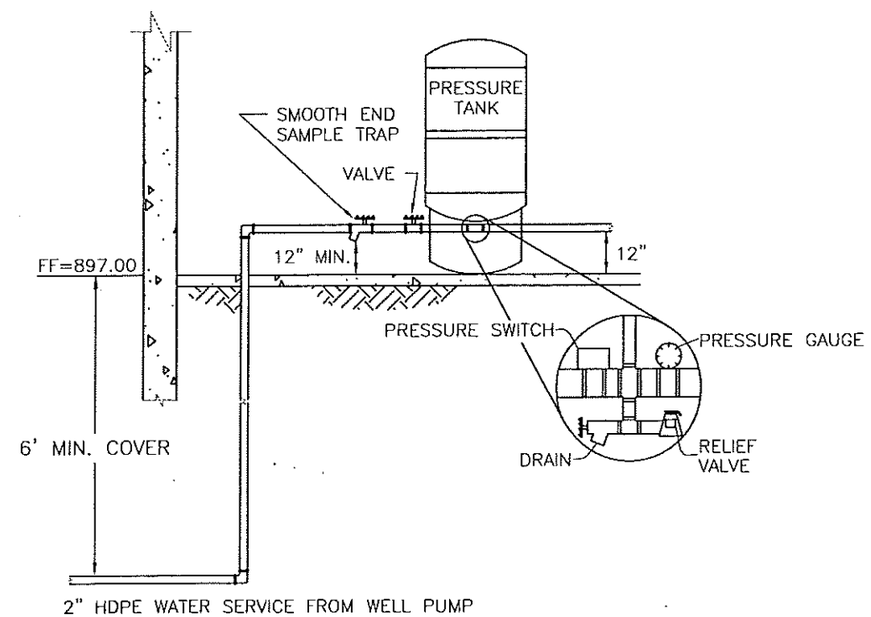

2 C501 PRESSURE TANK DETAIL
NOT TO SCALE

PLANS PREPARED BY: VIERBICHER ASSOCIATES, INC. REEDSBURG, WI	VAI# 001044954	WELL DETAILS		DATE: 11/1/05	FINAL PS & E
STATE PROJECT NUMBER: 1002-02-72	HWY: I-39/90	COUNTY: DANE	MADISON SAFETY & WEIGHT FACILITY NO. 16	SCALE, FEET 0	SHEET NO: 23 OF / DWG. C501

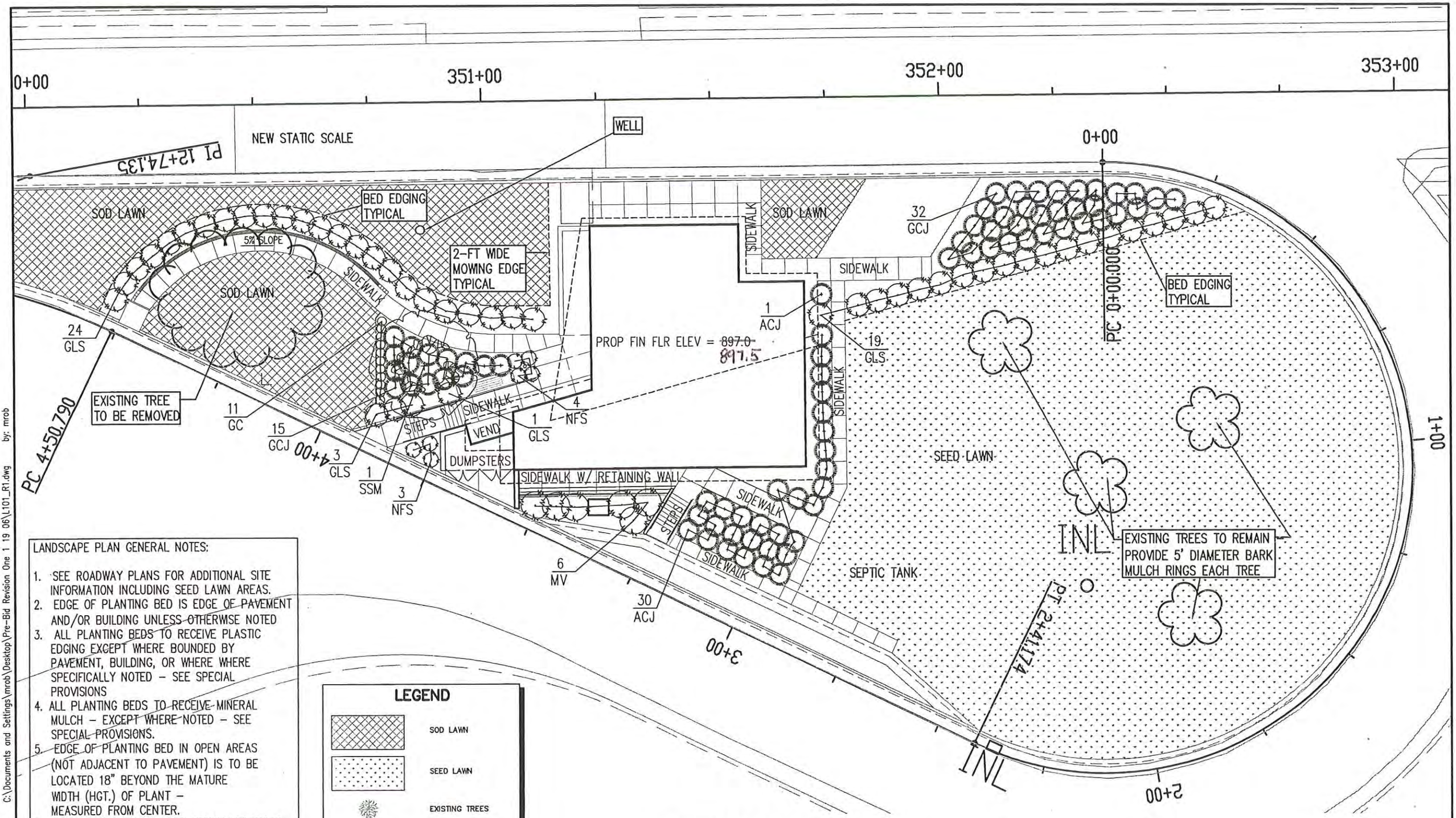

LANDSCAPE PLAN GENERAL NOTES:

1. SEE ROADWAY PLANS FOR ADDITIONAL SITE INFORMATION INCLUDING SEED LAWN AREAS.
2. EDGE OF PLANTING BED IS EDGE OF PAVEMENT AND/OR BUILDING UNLESS OTHERWISE NOTED
3. ALL PLANTING BEDS TO RECEIVE PLASTIC EDGING EXCEPT WHERE BOUNDED BY PAVEMENT, BUILDING, OR WHERE WHERE SPECIFICALLY NOTED – SEE SPECIAL PROVISIONS
4. ALL PLANTING BEDS TO RECEIVE MINERAL MULCH – EXCEPT WHERE NOTED – SEE SPECIAL PROVISIONS.
5. EDGE OF PLANTING BED IN OPEN AREAS (NOT ADJACENT TO PAVEMENT) IS TO BE LOCATED 18" BEYOND THE MATURE WIDTH (HGT.) OF PLANT – MEASURED FROM CENTER.
6. CONTRACTOR SHALL FIELD VERIFY LOCATIONS FOR WELL, SEPTIC, AND FLAGPOLE WITH OTHER TRADES.

LEGEND

- SOD LAWN
- SEED LAWN
- EXISTING TREES
- X — PLANT QUANTITY
- ABC — PLANT NAME SYMBOL

1 / L101 LANDSCAPE PLANTING PLAN
1" = 20'-0"

PLANS PREPARED BY: VIERBICHER ASSOCIATES, INC. REEDSBURG, WI		VAI# 001044954	LANDSCAPE PLANTING PLAN	DATE: 11/1/05	FINAL PS & E
STATE PROJECT NUMBER: 1002-02-72	HWY: I-39/90	COUNTY: DANE	MADISON SAFETY & WEIGHT FACILITY NO. 16	SCALE, FEET 0	SHEET NO: 24 OF / DWG. L101
				REVISION: 1	DATE: 2/2/06 BY: MER

02 Feb 2006 - 4:19p C:\Documents and Settings\mrob\Desktop\Pre-Bid Revision One 1 19 06\L101_R1.dwg by: mrob

TREES, BENCHES

STATION	TO	STATION		TREE PLANTINGS 632.0101.01 SCARLET SENT. HYBRID MAPLE 2½" CAL B&B EACH	BENCHES SPV.0060.01 EACH
3+75	–	3+75		1	1
			TOTALS	1	1

SHRUB PLANTINGS

STATION	TO	STATION	LOCATION	632.0201.01 GRO-LOW FRAGRANT SUMAC 18" HGT CONT EACH	632.0201.02 NEON FLASH SPIREA 18"HGT CONT EACH	632.0201.03 MOHICAN VIBURNUM 24" HGT CONT EACH	632.0201.04 GOLD COAST CHINESE JUNIPER 24" SPD CONT EACH	632.0201.05 ANDORRA COMPACT JUNIPER 24" SPD CONT EACH	SPV.0060.05 PERENNIALS GOLDSTRUM BLACK-EYED SUSAN #2 CONT EACH
0+00	–	0+25	BED	19	–	–	32	1	–
2+90	–	3+25	BED	–	–	–	–	30	–
3+25	–	3+50	BED	–	–	6	–	–	–
3+70	–	4+00	BED	10	7	–	15	–	11
4+00	–	4+50	BED	17	–	–	–	–	–
			TOTAL	46	7	6	47	31	11

LANDSCAPE PLANTING SURVEILLANCE AND CARE 632.9101

STATION TO STATION	LOCATION	EACH
0+00 – 4+50	ALL	148

PLANT DATA CHART

SYM.	TYPE	BOTANICAL NAME	COMMON NAME	AVG. MATURE HGT.	SIZE AT PLNTG	ROOT TYPE	MIN. BALL OR POT SIZE DIAM.	MIN. BALL OR POT SIZE DEPTH	MINIMUM HOLE SIZE DIAM.	MINIMUM HOLE SIZE DEPTH	BRACE OR GUY	FERT UNITS REQ'D	RODENT PROT. REQ'D	MULCH RING DIAMETER	PLANT BED DETAIL	REMARKS
		LARGE DECIDUOUS TREE														O.C. = ON CENTER
SSM	1T	ACER X FREMANII 'SCARLET SENTINEL'	SCARLET SENTINEL HYBRID MAPLE	40'	2-1/2"CAL	B&B	28"	17"	52"	17"	YES	4	NO	BED	N/A	LOCATE AS SHOWN
		LARGE DECIDUOUS SHRUBS														
MV	3S	VIBURNUM LANTANA 'MOHICAN'	MOHICAN VIBURNUM	6'	24"HGT.	CONT.	10"	8"	34"	8"	NO	2	NO	BED	N/A	5.0' O.C.
		SMALL DECIDUOUS SHRUBS														
GLS	1S	RHUS AROMATICA 'GRO-LOW'	GRO-LOW FRAGRANT SUMAC	2.5'	18"HGT.	CONT.	10"	8"	34"	8"	NO	2	NO	BED	N/A	4.0' O.C.
NFS	1S	SPIRAEA JAPONICA 'NEON FLASH'	NEON FLASH SPIREA	3'	18"HGT.	CONT.	10"	8"	34"	8"	NO	2	NO	BED	N/A	3.5' O.C.
		CONIFEROUS SHRUBS														
ACJ	1C	JUNIPERUS HORIZONTALIS 'PLUMOSA'	ANDORRA COMPACT JUNIPER	1.5'	24"SPD.	CONT.	10"	8"	34"	8"	NO	2	NO	BED	N/A	4.0' O.C.
GCJ	2C	JUNIPERUS CHINENSIS 'GOLD COAST'	GOLD COAST CHINESE JUNIPER	2.5'	24"SPD.	CONT.	10"	8"	34"	8"	NO	2	NO	BED	N/A	4.5' O.C.
		PERENNIALS														
GC	—	RUBECKIA FUL VAR SULLIVAN 'GOLDSTRUM'	GOLDSTRUM BLACK-EYED SUSAN	2'	#2/2ndYR	CONT.	5"	6"	17"	6"	NO	0	NO	BED	N/A	2.0' O.C.

1 / L102 LANDSCAPE SCHEDULES
NOT TO SCALE

PLANS PREPARED BY: VIERBICHER ASSOCIATES, INC. REEDSBURG, WI	VAI# 001044954	LANDSCAPE SCHEDULES AND LISTS		DATE: 11/1/05	FINAL PS & E
STATE PROJECT NUMBER: 1002-02-72	HWY: I-39/90	COUNTY: DANE	MADISON SAFETY & WEIGHT FACILITY NO. 16	SCALE, FEET 0	SHEET NO: 25 OF / DWG. L102

REVISION: 1 DATE: 2/2/06 BY: MER

27 Feb 2006 - 4:49p C:\Documents and Settings\mrob\Desktop\L102_R1.dwg by: mrob

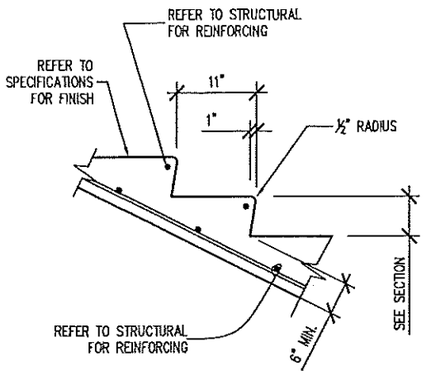

4 A101 STAIR DETAIL
1/2" = 1'-0"

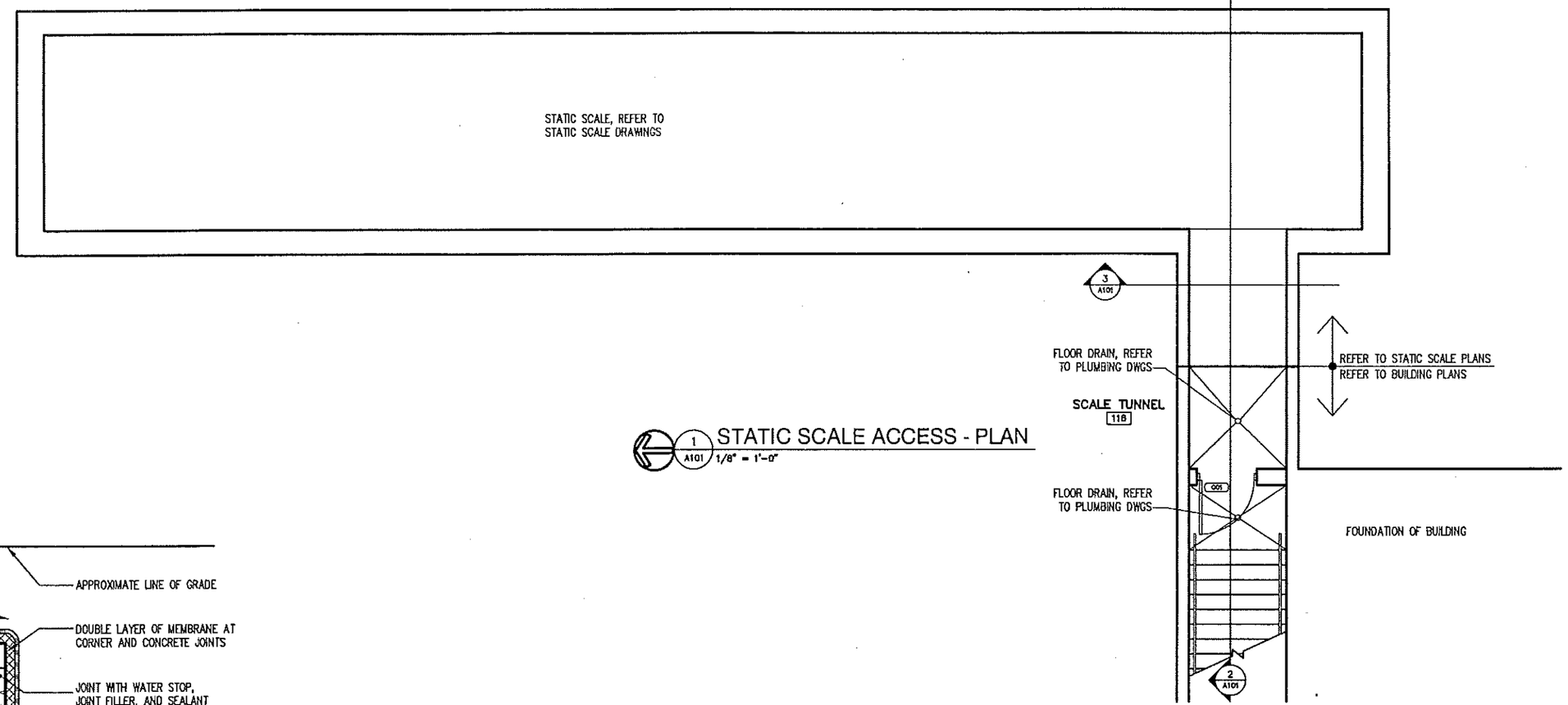

1 A101 STATIC SCALE ACCESS - PLAN
1/8" = 1'-0"

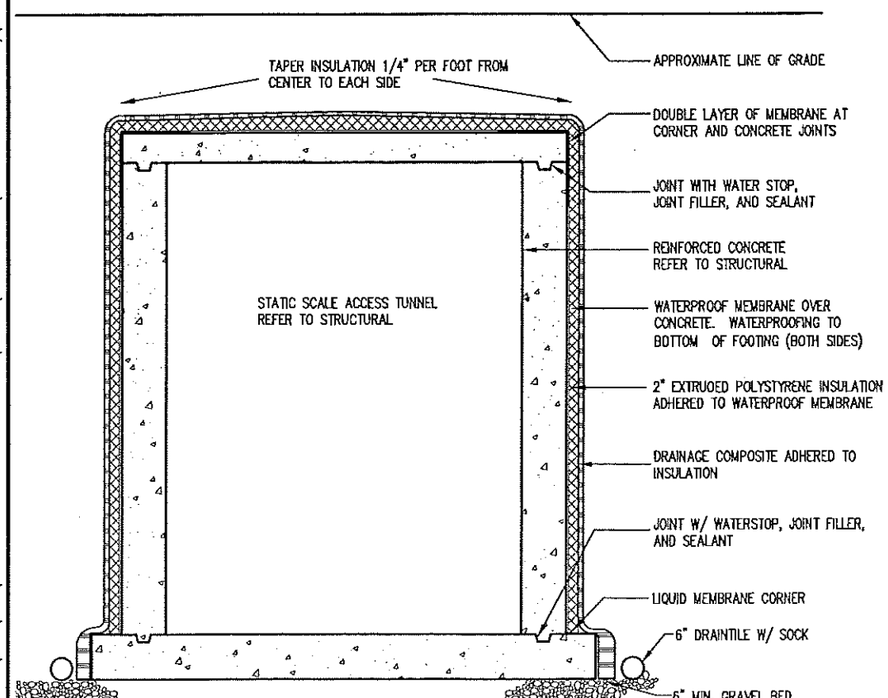

3 A101 SECTION -SCALE TUNNEL WATERPROOFING
3/8" = 1'-0"

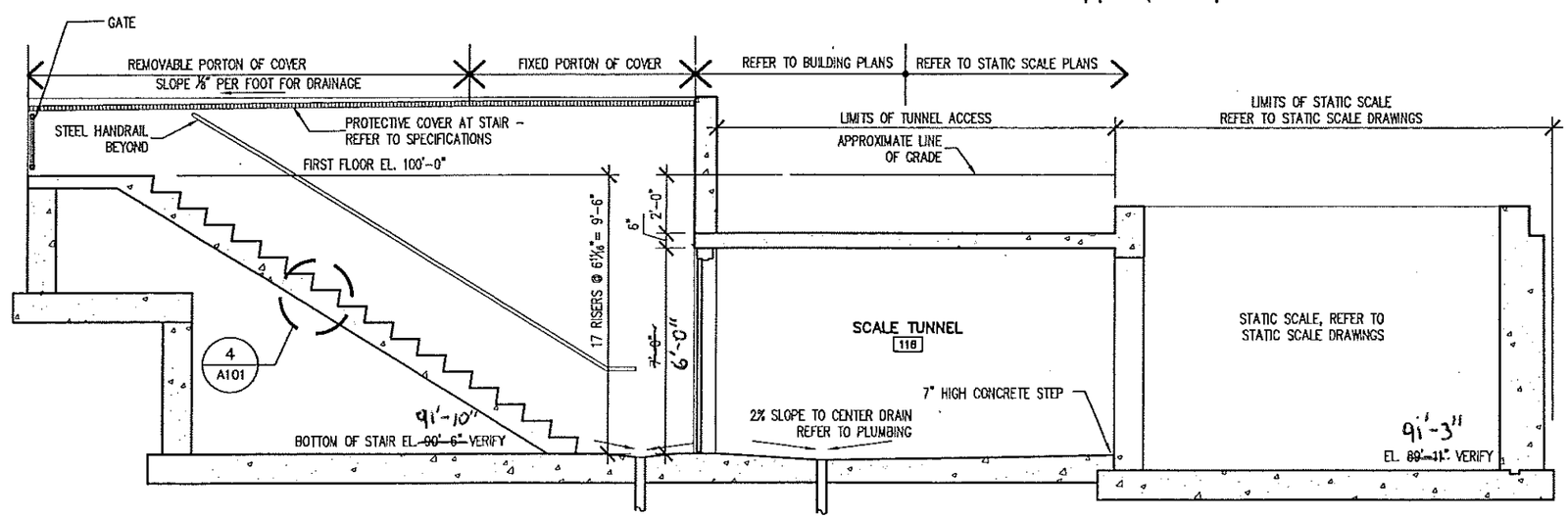

2 A101 SECTION - STATIC SCALE TUNNEL
3/16" = 1'-0"

PLANS PREPARED BY: VIERBICHER ASSOCIATES, INC. REEDSBURG, WI		VAI# 001044954	STATIC SCALE ACCESS PLAN & SECTIONS	DATE: 11/1/05	FINAL PS & E
STATE PROJECT NUMBER: 1002-02-72	HWY: I-39/90	COUNTY: DANE	MADISON SAFETY & WEIGHT FACILITY NO. 16 SCALE, FEET 0	SHEET NO: 26 OF	DWG. A101

SHEET KEY NOTES (X)

1. WEATHER TV BY OWNER, MOUNTING BRACKET BY G.C. REFER TO DIV. 10 SPECIFICATIONS.
2. VENDING MACHINES BY OTHERS
3. PUBLIC PAY PHONE BY OTHERS
4. EMERGENCY EYE WASH & SHOWER, REFER TO PLUMBING DWGS
5. REFIGERATOR BY OWNER
6. FURNISHINGS, REFER TO DIV. 12 SPECIFICATIONS.
7. 4" HIGH HOUSEKEEPING SLAB
8. DUMPSTER BY OTHERS
9. SCREENED GATES
10. RECESSED FOOT GRILLE
11. SIGNAGE WALL ON THIS WALL TO SIGNIFY ENTRY
12. UTILITY SHELVING, REFER TO SPEC. SECTION 06402
13. SEMI-RECESSED FIRE EXTINGUISHER
14. SEMI-RECESSED PAPER TOWEL DISPENSER & TRASH RECEPTACLE
15. TOILET PAPER DISPENSER
16. MIRROR
17. LAVATORY MOUNTED SOAP DISPENSER
18. SANITARY NAPKIN DISPOSAL
19. CLOTHES HOOK
20. SHELF ABOVE SINK
21. GRAB BARS
22. FLOOR MOUNTED BENCH
23. RECESSED MAP CASES.
24. ROLLER SHADES, REFER TO A401 FOR EXTENT
25. HORIZONTAL LOUVER BLINDS, REFER TO A401 FOR EXTENT.
26. A/V SCREEN, REFER TO SPECIFICATIONS
27. RECESSED FLOOR SLAB FOR TILE, THIS ROOM
28. FLOOR DRAIN, THIS ROOM, REFER TO PLUMBING
29. ACCESS PANEL, REFER TO SPECIFICATION
30. SEPTIC ALARM CONTROL PANEL, MOUNTED 48"A.F.F.REFER TO SPEC.
31. FIELD VERIFING LOCATIONS & EXTENT OF RAISED HOUSEKEEPING PAD & FLOOR DRAINS SERVING EQUIPMENT.
32. CONCRETE SIDEWALK, SEE SITE PLAN FOR CONTINUATION
33. CONCRETE STEPS WITH HANDRAIL, SEE STRUCTURAL
34. CONCRETE APRON. SLOPE OUT TO DRIVE, REFER TO SITE PLAN

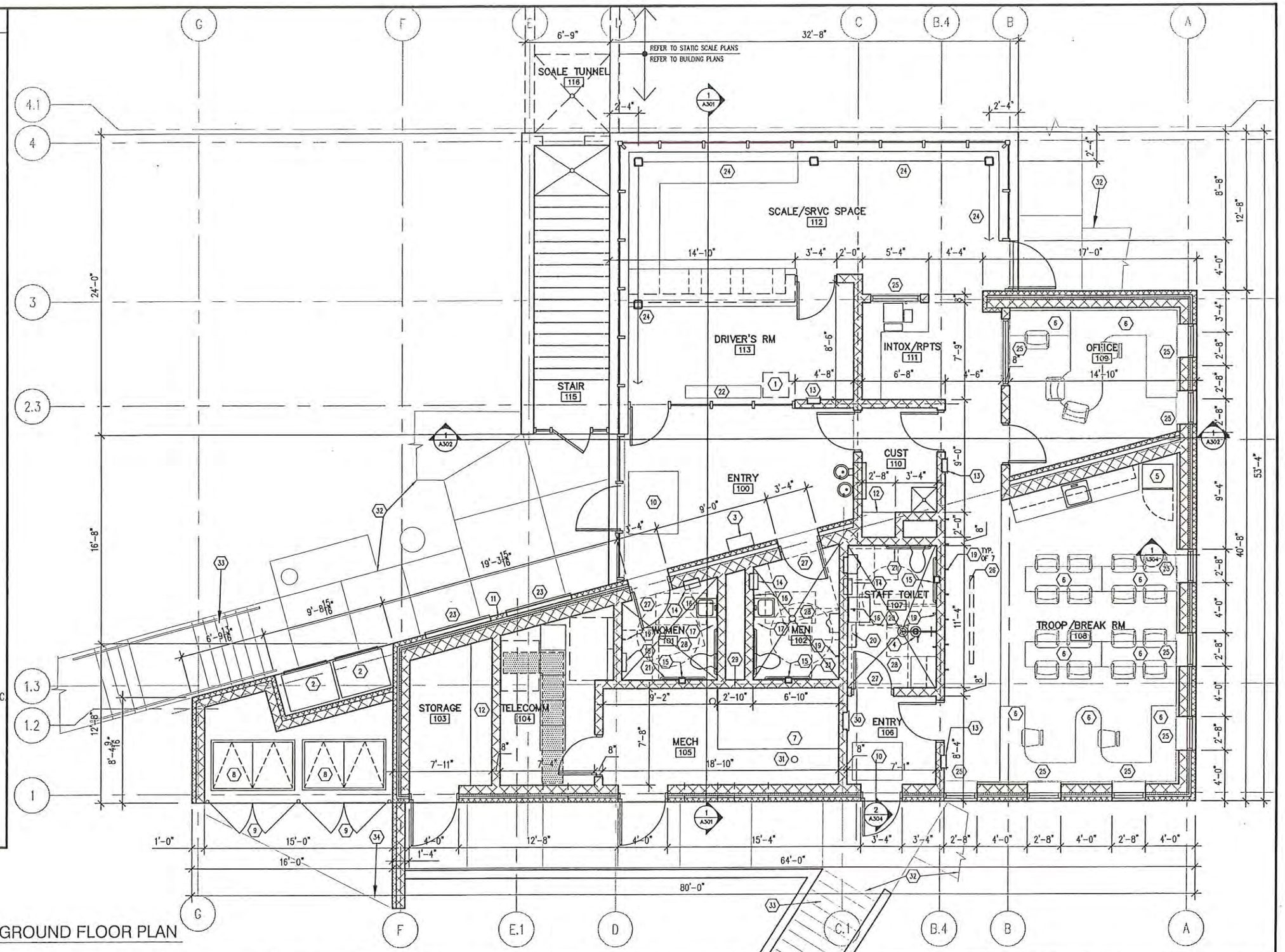

1 A102 BUILDING DIMENSION PLAN - GROUND FLOOR PLAN
1/8" = 1'-0"

PLANS PREPARED BY: VIERBICHER ASSOCIATES, INC. REEDSBURG, WI		VAI# 001044954	BUILDING DIMENSION PLAN – GROUND FLOOR PLAN	DATE: 11/1/05	FINAL PS & E
STATE PROJECT NUMBER: 1002-02-72	HWY: I-39/90	COUNTY: DANE	MADISON SAFETY & WEIGHT FACILITY NO. 16	SCALE, FEET 0	SHEET NO: 27 OF / DWG. A102

31 Oct 2005 – 4:06p G:\DATA\arch\WISDOT 001044954 Madison SWEF\1_Arch\5 Final PS&E (Construction Documents)\03 Drawings\A102.dwg by: sbau2

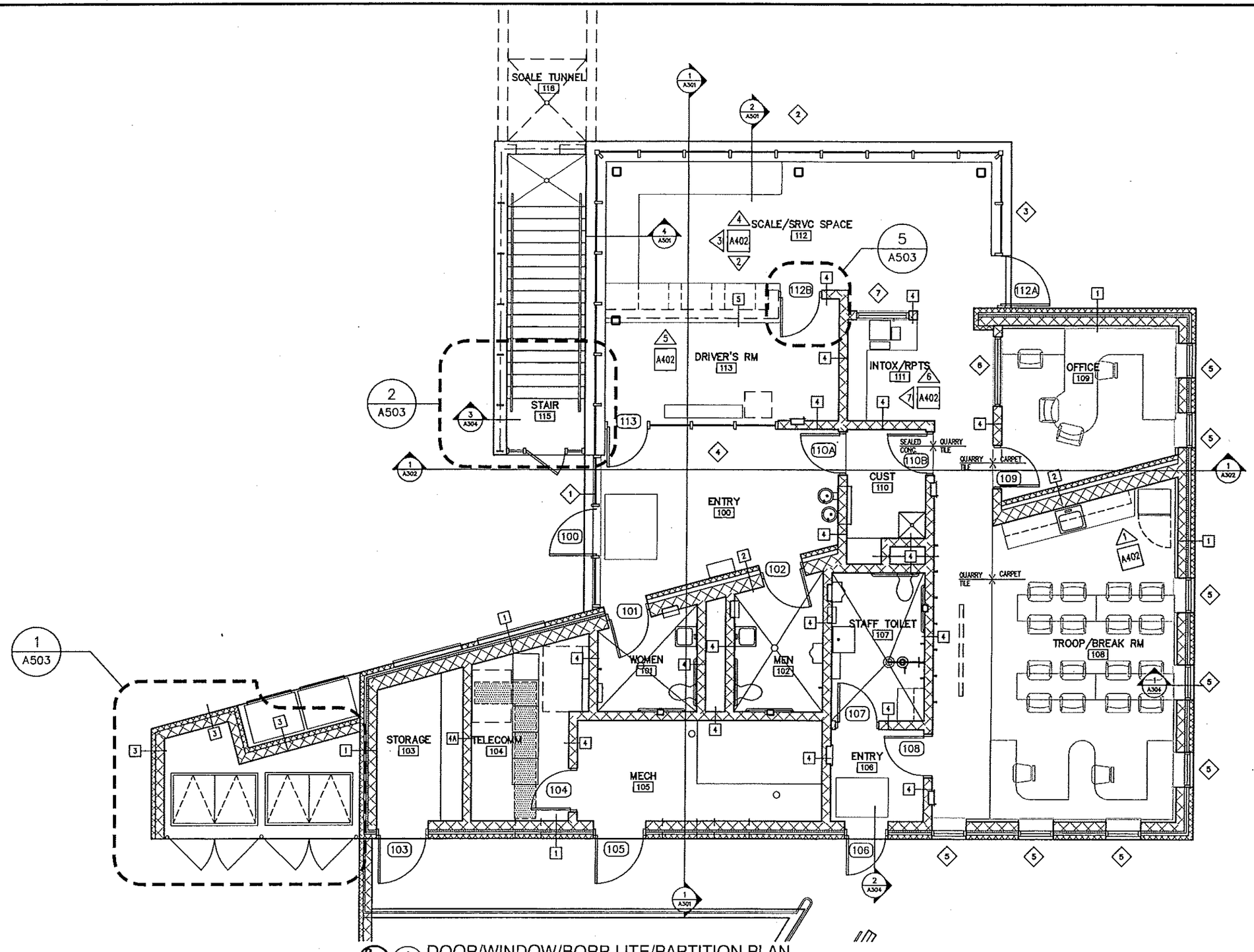

1 A103 DOOR/WINDOW/BORR.LITE/PARTITION PLAN
1/8" = 1'-0"

PLANS PREPARED BY: VIERBICHER ASSOCIATES, INC. REEDSBURG, WI		VAI# 001044954	DOOR/WINDOW/BORR.LITE/PARTITION PLAN	DATE: 11/1/05	FINAL PS & E
STATE PROJECT NUMBER: 1002-02-72	HWY: I-39/90	COUNTY: DANE	MADISON SAFETY & WEIGHT FACILITY NO. 16	SCALE, FEET 0	SHEET NO: 28 OF / DWG. A103

31 Oct 2005 - 4:25p G:\DATA\arch\WISDOT 001044954 Madison SWEF\1_Arch\5 Final PS&E (Construction Documents)\03 Drawings\A103.dwg by: sbau2

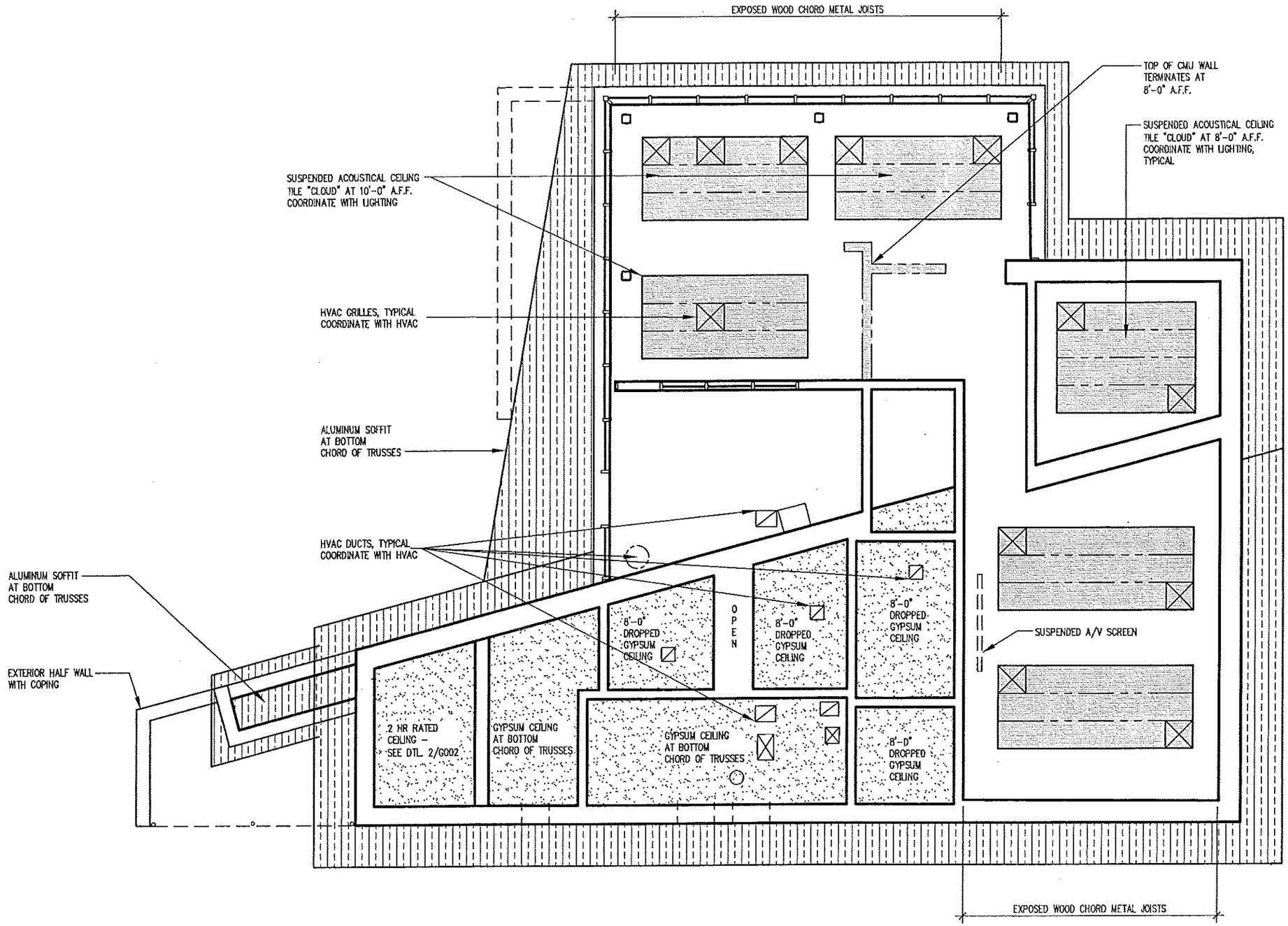

1 A104 REFLECTED CEILING PLAN
1/8" = 1'-0"

PLANS PREPARED BY: VIERBICHER ASSOCIATES, INC. REEDSBURG, WI	VAI# 001044954	REFLECTED CEILING PLAN		DATE: 11/1/05	FINAL PS & E
STATE PROJECT NUMBER: 1002-02-72	HWY: I-39/90	COUNTY: DANE	MADISON SAFETY & WEIGHT FACILITY NO. 16	SCALE, FEET 0	SHEET NO: 29 OF / DWG. A104

31 Oct 2005 - 4:33p G:\DATA\arch\WISDOT 001044954 Madison SWEF\1_Arch\5 Final PS&E (Construction Documents)\03 Drawings\A104.dwg by: sbau2

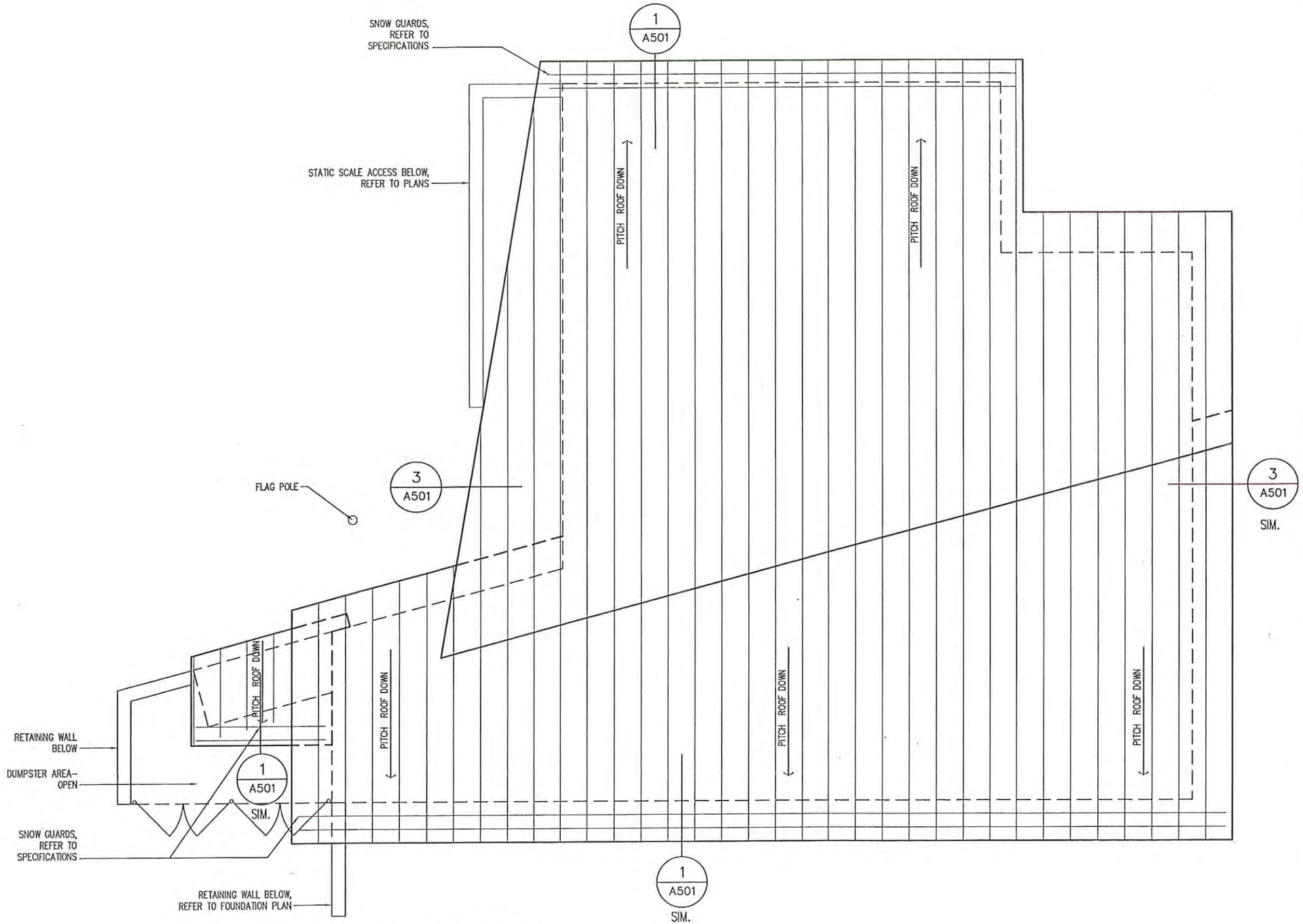

1 A105 ROOF PLAN
1/8" = 1'-0"

PLANS PREPARED BY: VIERBICHER ASSOCIATES, INC. REEDSBURG, WI		VAI# 001044954	ROOF PLAN	DATE: 11/1/05	FINAL PS & E
STATE PROJECT NUMBER: 1002-02-72	HWY: I-39/90	COUNTY: DANE	MADISON SAFETY & WEIGHT FACILITY NO. 16	SCALE, FEET 0	SHEET NO: 30 OF / DWG. A105

31 Oct 2005 - 4:34p G:\DATA\arch\WISDOT 001044954 Madison SWEF\1_Arch\5 Final PS&E (Construction Documents)\03 Drawings\A105.dwg by: sbau2

LEGEND

- BEAM/HEADER
- ROOF OUTLINE
- COMMON FRAMING (OUTRIGGERS/CANTILEVERS)
- OPEN WEB ENGINEERED WOOD ROOF TRUSS
- METAL PLATE CONNECTED WOOD ROOF TRUSS
- STRUCTURAL STEEL COLUMN

NOTES:

1. ACTUAL ROOF TRUSSES CONFIGURATION BY TRUSS DESIGNER/ MANUFACTURER.

2. VERIFY BEAM ELEVATIONS WITH TRUSS MENUFACTURER'S BEARING CONDITION.

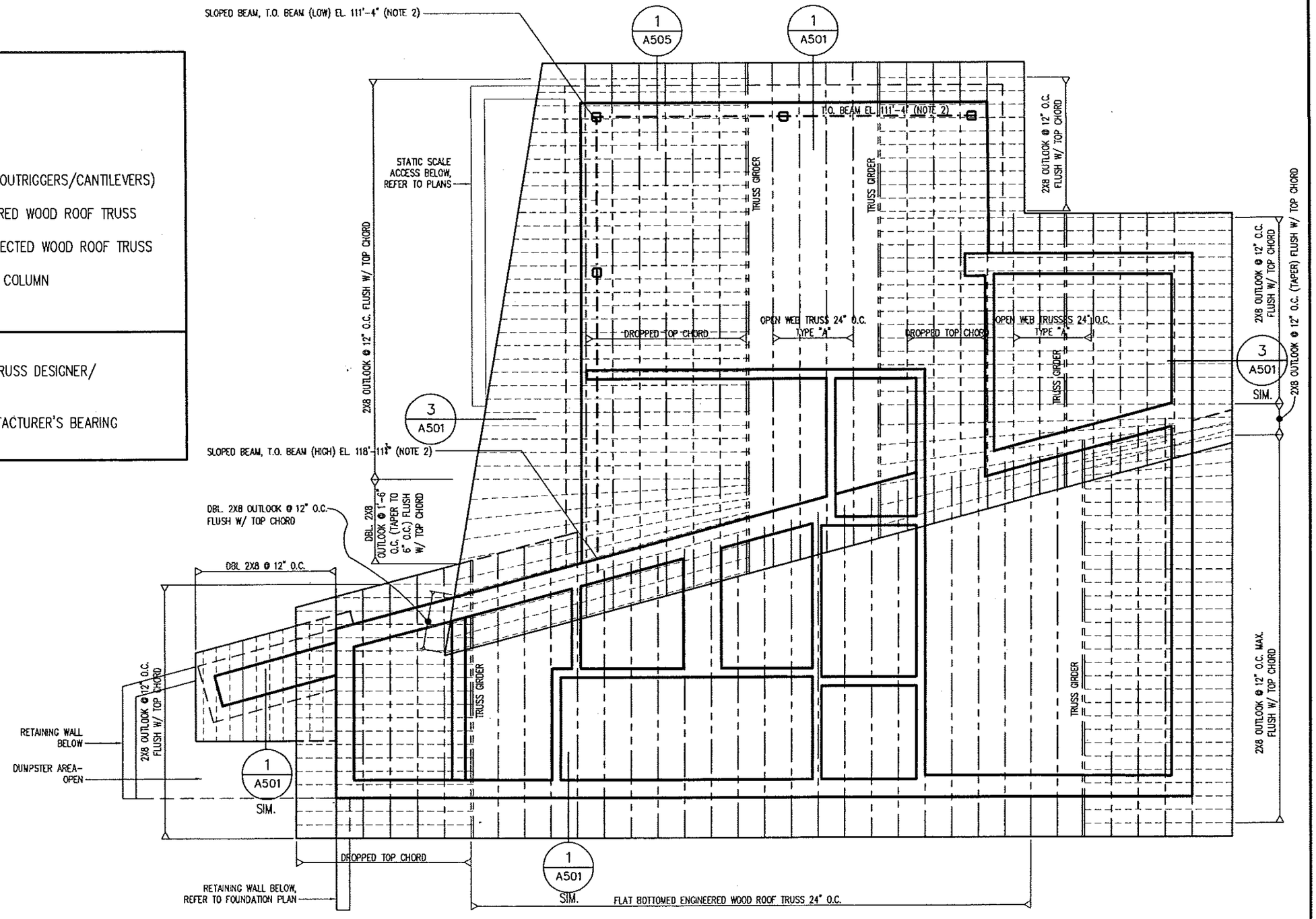

1 A106 ROOF FRAMING PLAN
1/8" = 1'-0"

PLANS PREPARED BY: VIERBICHER ASSOCIATES, INC. REEDSBURG, WI	VAI# 001044954	ROOF FRAMING PLAN	DATE: 11/1/05	FINAL PS & E
STATE PROJECT NUMBER: 1002-02-72 / HWY: I-39/90	COUNTY: DANE	MADISON SAFETY & WEIGHT FACILITY NO. 16 / SCALE, FEET 0	SHEET NO: 31 OF	DWG. A106
			REVISION: 1 DATE: 2/17/06	BY: MER

02 Mar 2006 - 11:36a C:\Documents and Settings\mrob\Desktop\Pre-Bid Revision One 1 19 06\A106_R1.dwg by: mrob

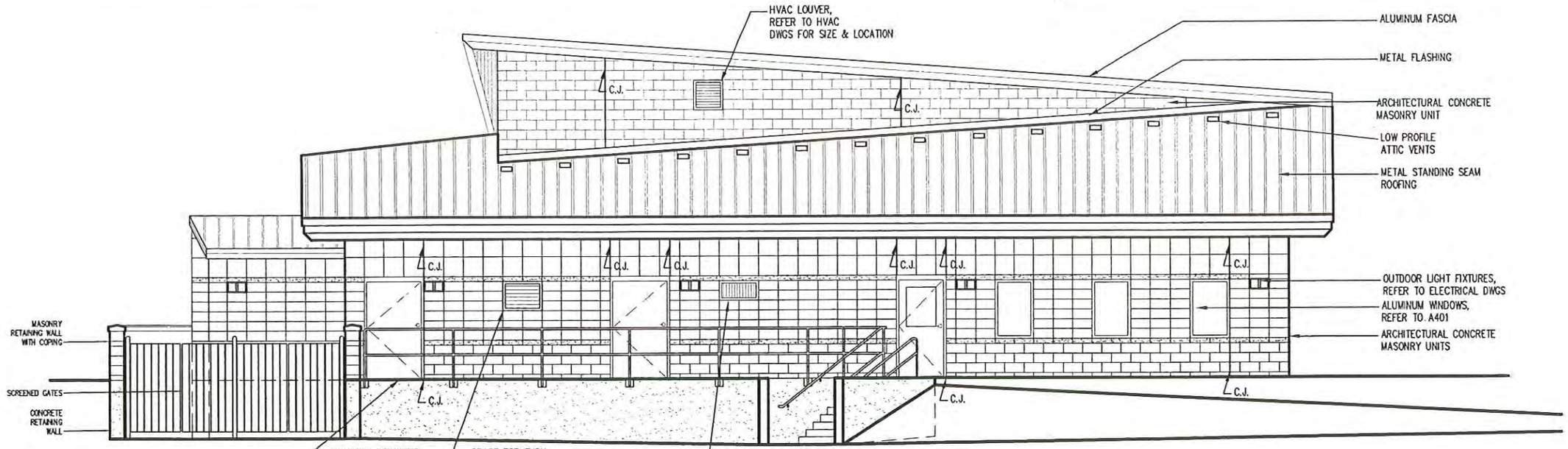

1 A201 WEST ELEVATION
1/8" = 1'-0"

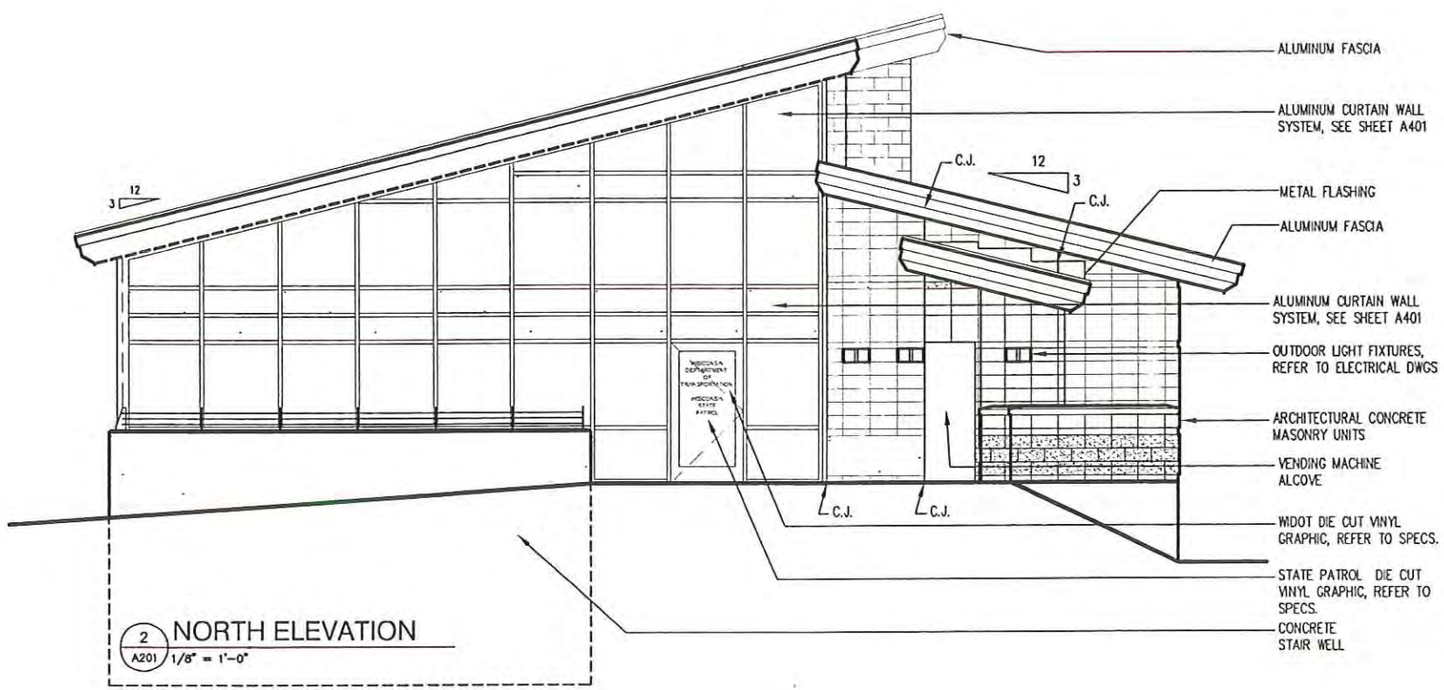

2 A201 NORTH ELEVATION
1/8" = 1'-0"

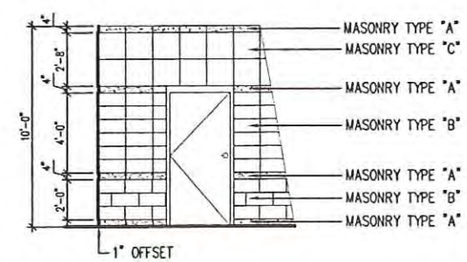

3 A201 DETAIL ELEVATION - TYPICAL
1/8" = 1'-0"

SHEET KEY NOTES

1. CJ = CONTROL JOINT, SEE 2A/A502 FOR DETAIL
2. REFER TO ROOF PLAN FOR SNOW GUARD LOCATIONS
3. REFER TO 3/A201 FOR TYPICAL MASONRY PATTERNS

PLANS PREPARED BY: VIERBICHER ASSOCIATES, INC. REEDSBURG, WI		VAI# 001044954	BUILDING ELEVATIONS – NORTH & WEST	DATE: 11/1/05	FINAL PS & E
STATE PROJECT NUMBER: 1002-02-72	HWY: I-39/90	COUNTY: DANE	MADISON SAFETY & WEIGHT FACILITY NO. 16 SCALE, FEET 0	SHEET NO: 32 OF	DWG. A201
				REVISION: 2 DATE: 3/2/06	BY: MER

02 Mar 2006 – 11:13a G:\DATA\arch\WISDOT 001044954 Madison SWEF\1_Arch\5 Final PS&E (Construction Documents)\03 Drawings\Pre-Bid Revision 2\A201_R2.dwg by: mrob

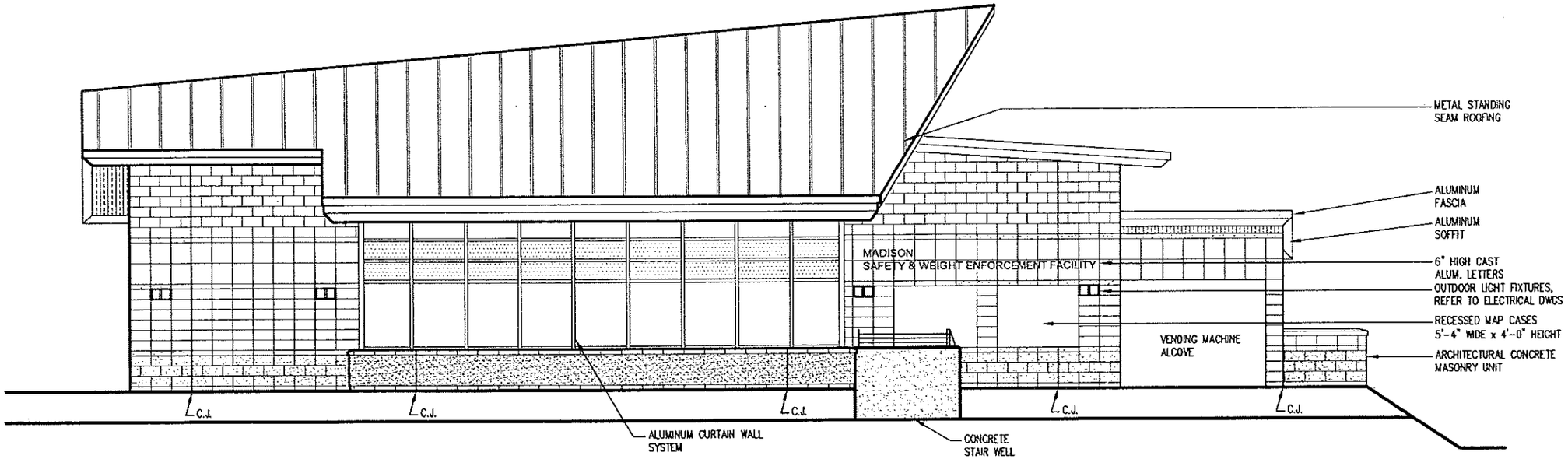

1 A202 EAST ELEVATION
1/8" = 1'-0"

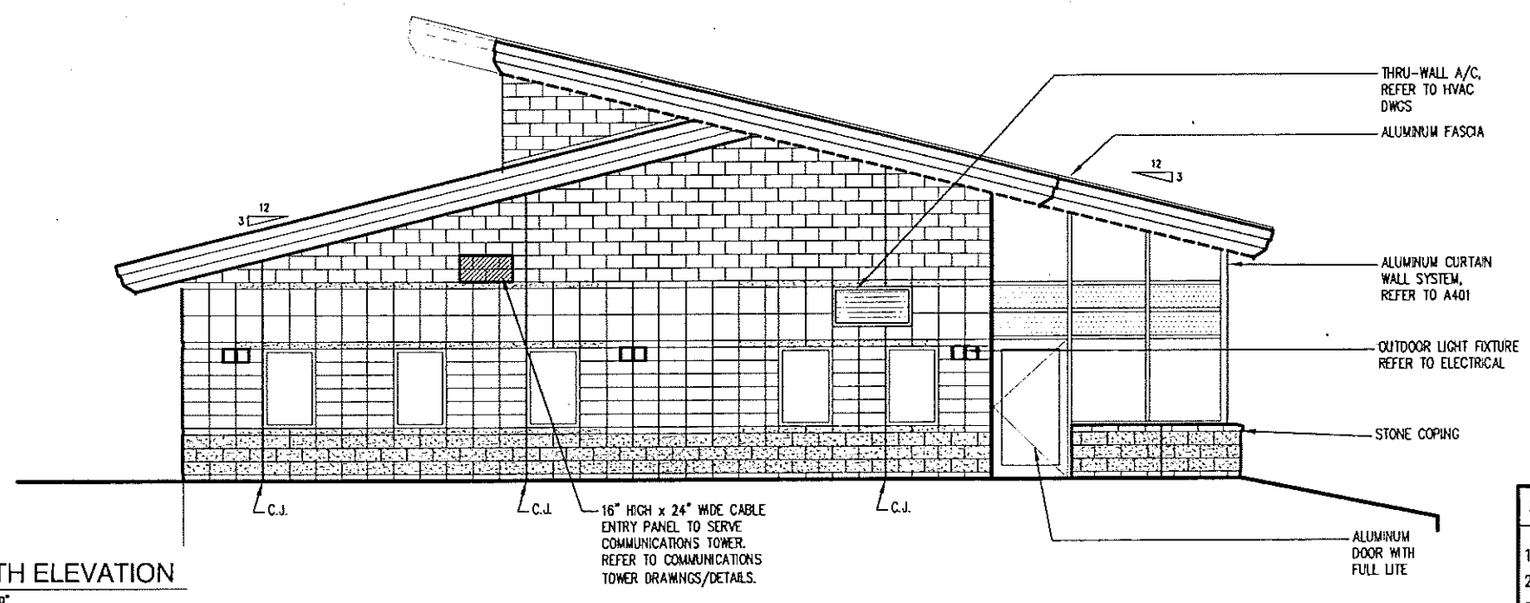

2 A202 SOUTH ELEVATION
1/8" = 1'-0"

SHEET KEY NOTES

1. CJ = CONTROL JOINT, SEE 2A/A502 FOR DETAIL
2. REFER TO ROOF PLAN FOR SNOW GUARD LOCATIONS
3. REFER TO 3/A201 FOR TYPICAL MASONRY PATTERNS

PLANS PREPARED BY: VIERBICHER ASSOCIATES, INC. REEDSBURG, WI	VAI# 001044954	BUILDING ELEVATIONS – SOUTH & EAST		DATE: 11/1/05 FINAL PS & E
STATE PROJECT NUMBER: 1002-02-72	HWY: I-39/90	COUNTY: DANE	MADISON SAFETY & WEIGHT FACILITY NO. 16	SCALE, FEET 0 — SHEET NO: 33 OF — DWG. A202
				REVISION: 1 DATE: 2/2/06 BY: MER

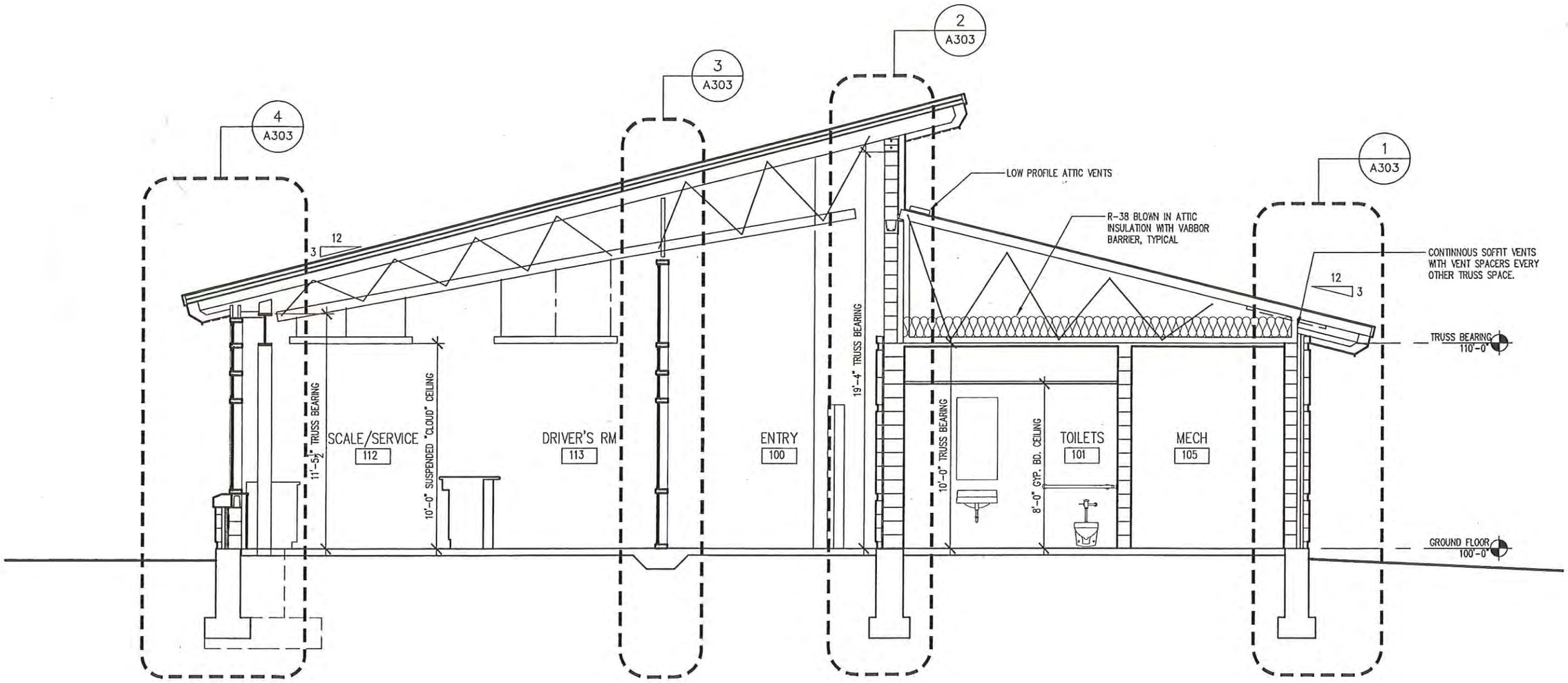

1 A301 BUILDING SECTION (LOOKING SOUTH)
3/16" = 1'-0"

PLANS PREPARED BY: VIERBICHER ASSOCIATES, INC. REEDSBURG, WI		VAI# 001044954	BUILDING SECTION	DATE: 11/1/05	FINAL PS & E
STATE PROJECT NUMBER: 1002-02-72	HWY: I-39/90	COUNTY: DANE	MADISON SAFETY & WEIGHT FACILITY NO. 16	SCALE, FEET 0	SHEET NO: 34 OF / DWG. A301

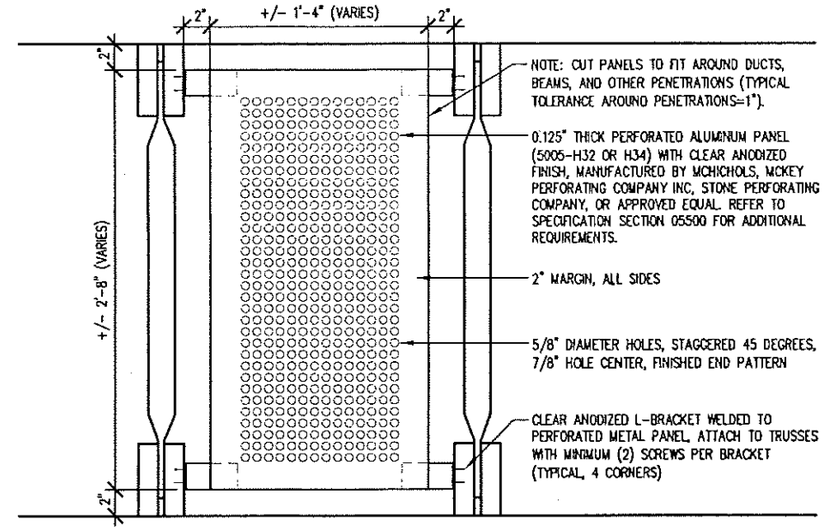

2 / A302 DETAIL-PERFORATED METAL PANEL
1" = 1'-0"

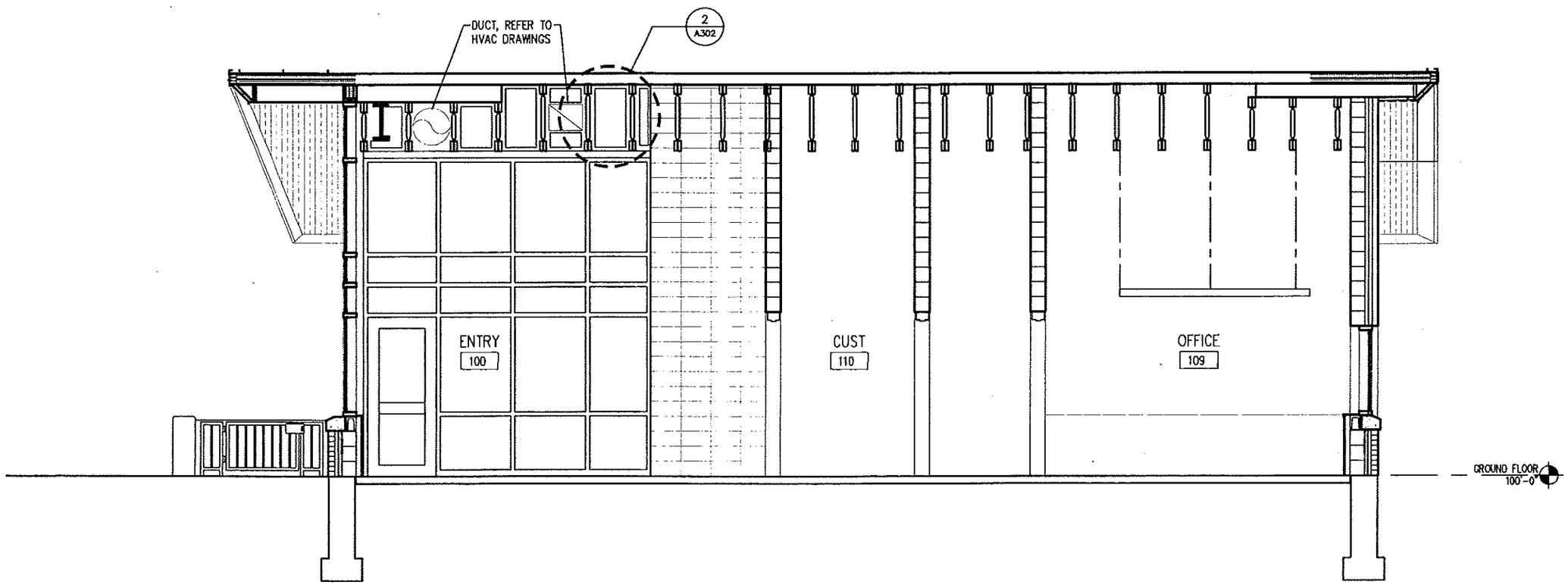

1 / A302 BUILDING SECTION (LOOKING EAST)
3/16" = 1'-0"

PLANS PREPARED BY: VIERBICHER ASSOCIATES, INC. REEDSBURG, WI		VAI# 001044954	BUILDING SECTION	DATE: 11/1/05	FINAL PS & E
STATE PROJECT NUMBER: 1002-02-72	HWY: I-39/90	COUNTY: DANE	MADISON SAFETY & WEIGHT FACILITY NO. 16	SCALE, FEET 0	SHEET NO: 35 OF / DWG. A302

REVISION: 1 DATE: 2/17/06 BY: MER

17 Feb 2006 - 10:50a C:\Documents and Settings\mrob\Desktop\Pre-Bid Revision One 1 19 06\A302_R1.dwg by: mrob

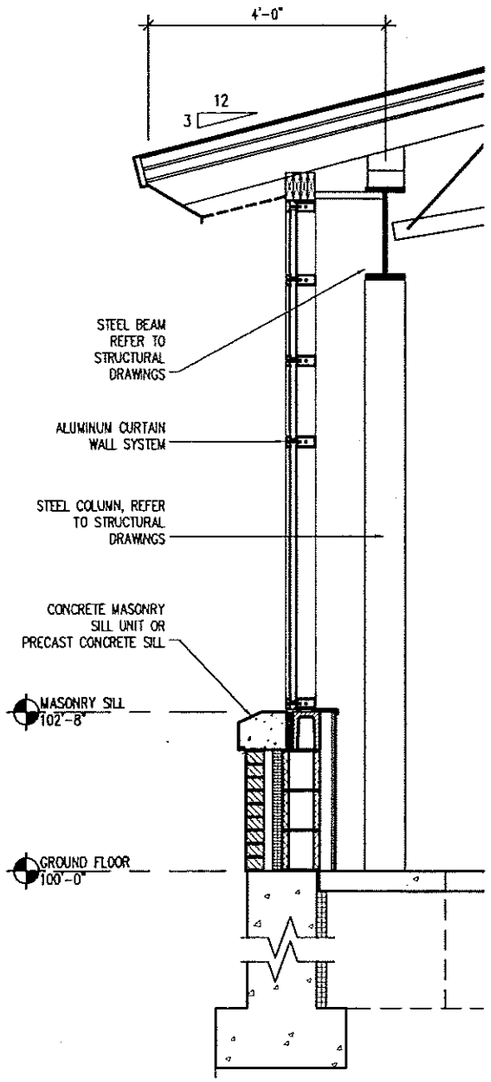

4 A303 WALL SECTION 3/8" = 1'-0"

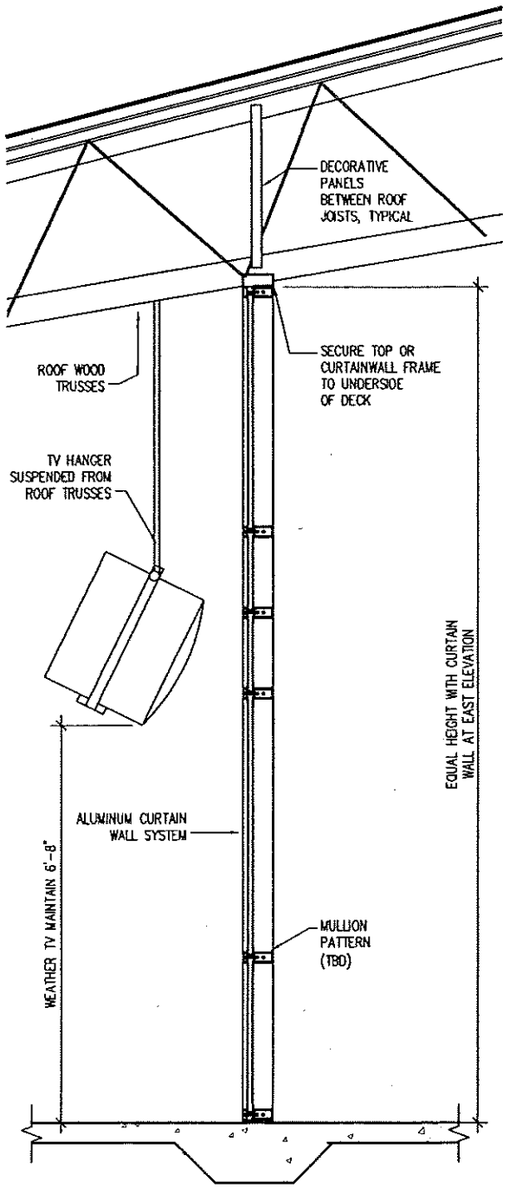

3 A303 WALL SECTION 3/8" = 1'-0"

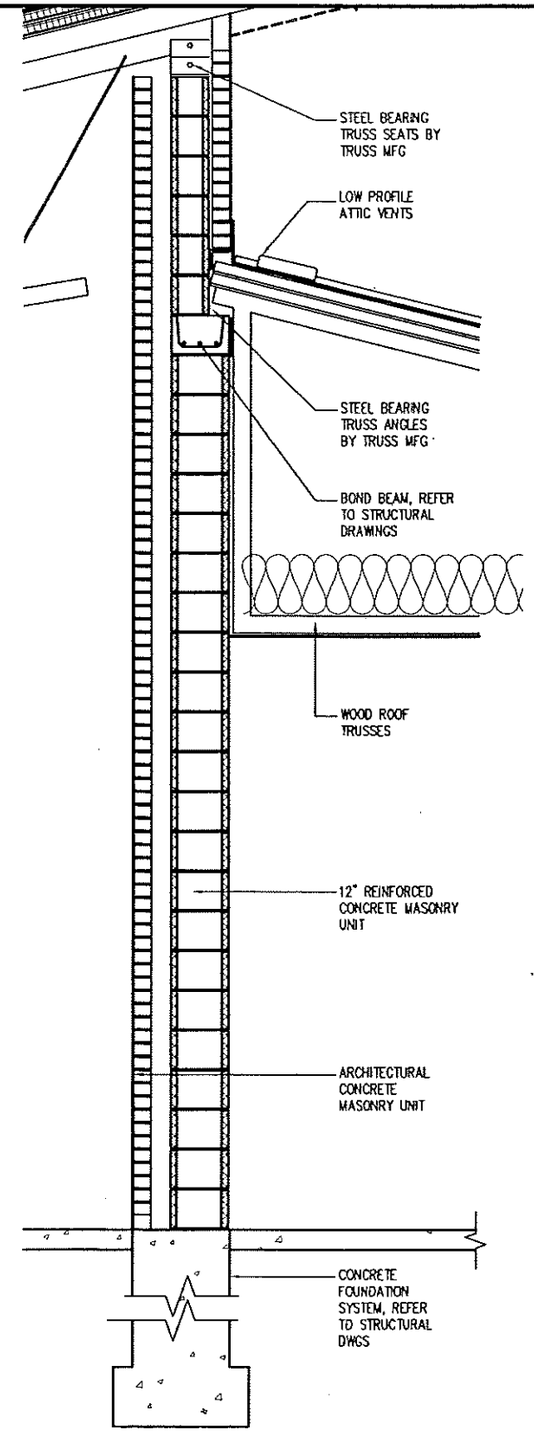

2 A303 WALL SECTION 3/8" = 1'-0"

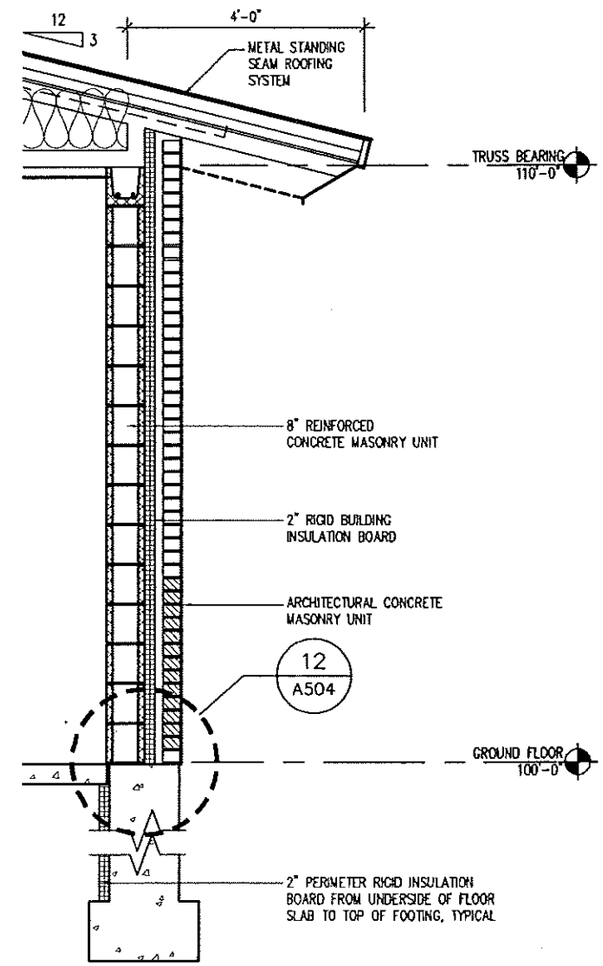

1 A303 WALL SECTION 3/8" = 1'-0"

PLANS PREPARED BY: VIERBICHER ASSOCIATES, INC. REEDSBURG, WI		VAI# 001044954	WALL SECTIONS	DATE: 11/1/05	FINAL PS & E
STATE PROJECT NUMBER: 1002-02-72	HWY: I-39/90	COUNTY: DANE	MADISON SAFETY & WEIGHT FACILITY NO. 16	SCALE, FEET 0	SHEET NO: 36 OF / DWG. A303

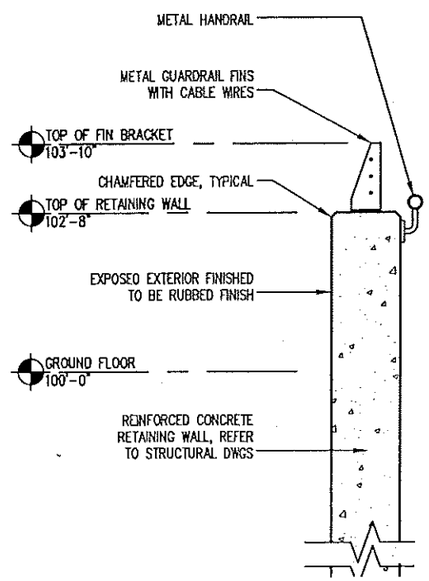

3 A304 WALL SECTION 3/8" = 1'-0"

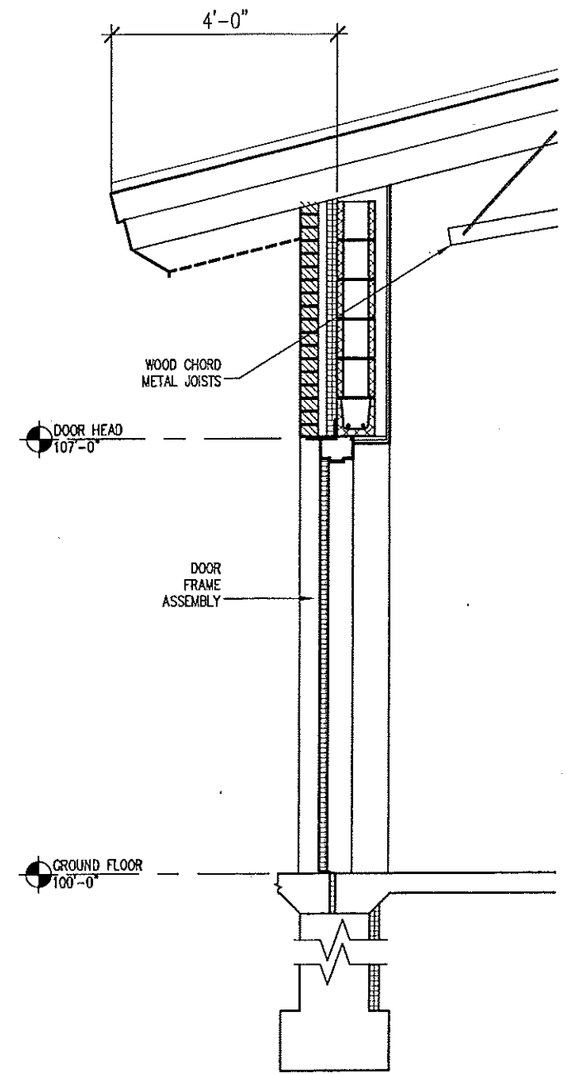

2 A304 WALL SECTION 3/8" = 1'-0"

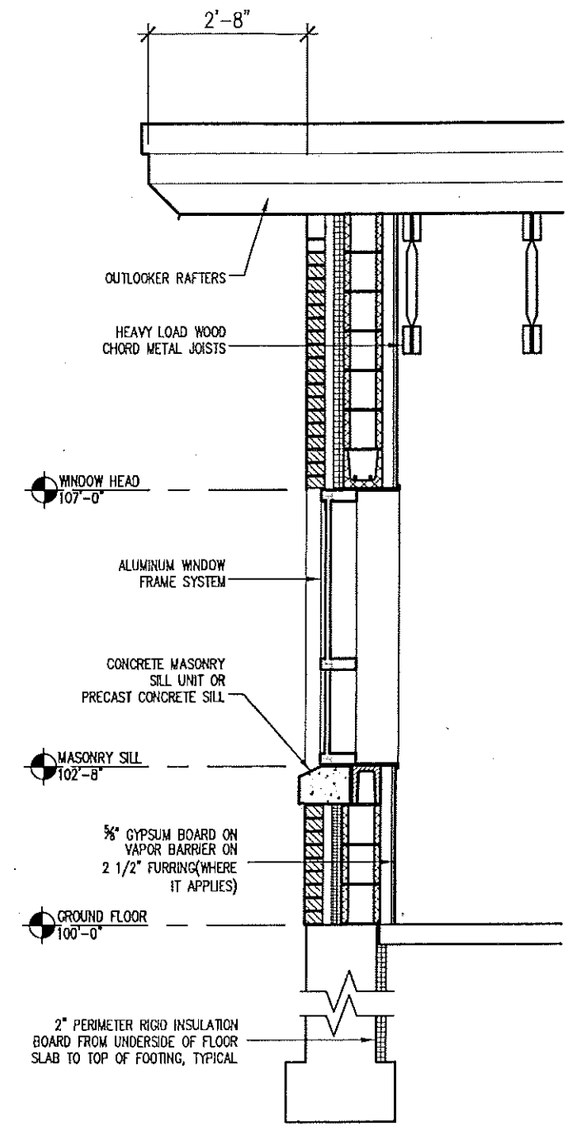

1 A304 WALL SECTION 3/8" = 1'-0"

PLANS PREPARED BY: VIERBICHER ASSOCIATES, INC. REEDSBURG, WI		VAI# 001044954	WALL SECTIONS	DATE: 11/1/05	FINAL PS & E
STATE PROJECT NUMBER: 1002-02-72	HWY: I-39/90	COUNTY: DANE	MADISON SAFETY & WEIGHT FACILITY NO. 16	SCALE, FEET 0	SHEET NO: 37 OF / DWG. A304

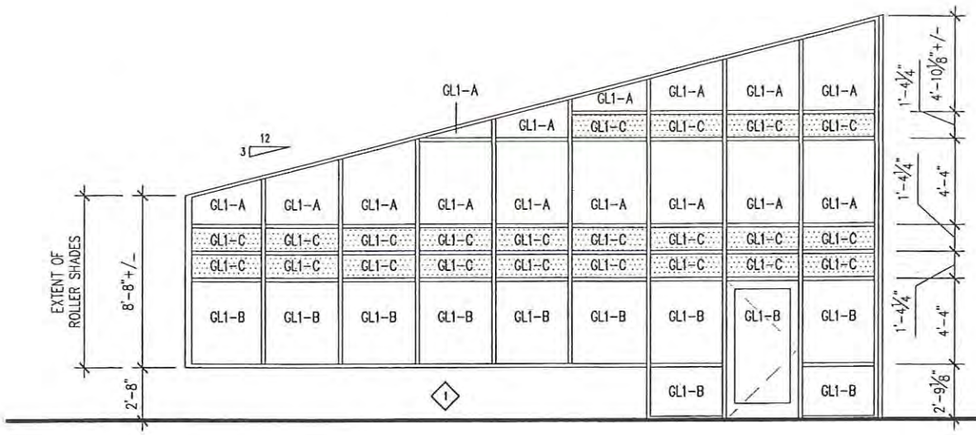

1 A401 CURTAINWALL ELEVATION
1/8" = 1'-0"

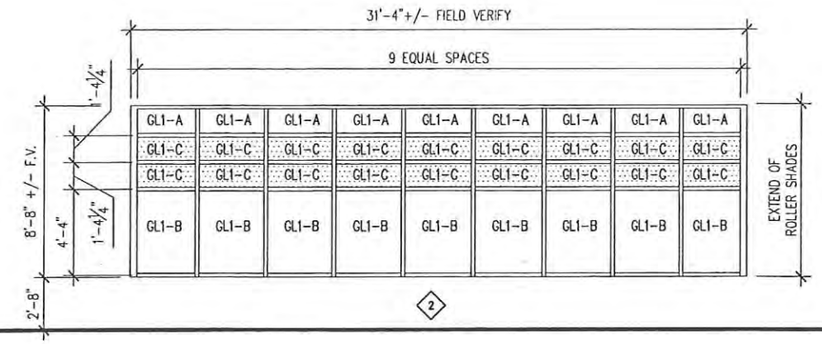

2 A401 CURTAINWALL ELEVATION
1/8" = 1'-0"

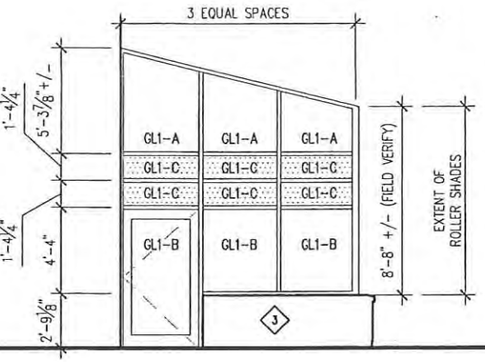

3 A401 CURTAINWALL ELEVATION
1/8" = 1'-0"

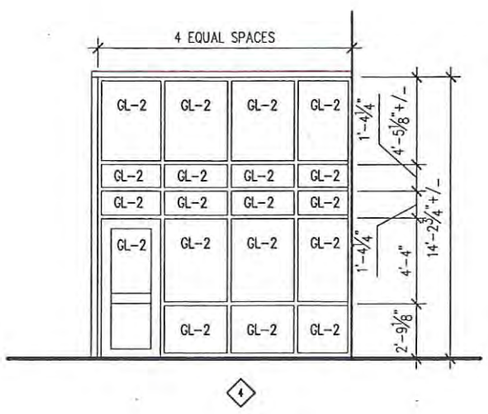

4 A401 INTERIOR ELEVATION
1/8" = 1'-0"

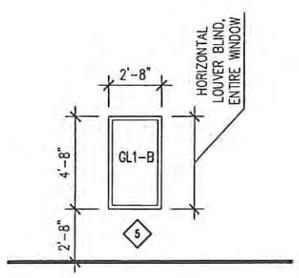

5 A401 WINDOW TYPE
1/8" = 1'-0"

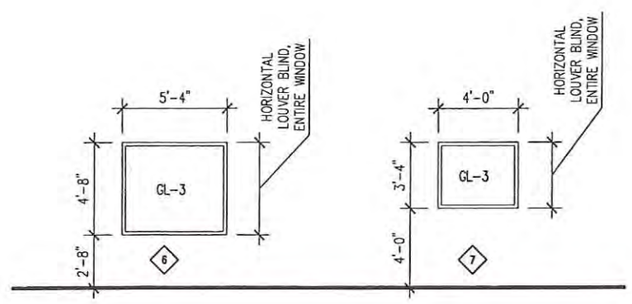

6 A401 INTERIOR BORROWED LITE
1/8" = 1'-0"

SHEET KEY NOTES

1. "GL" DESIGNATIONS REFER TO GLAZING TYPES AND COATING, REFER TO SPECIFICATIONS.

PLANS PREPARED BY: VIERBICHER ASSOCIATES, INC. REEDSBURG, WI		VAI# 001044954	CURTAINWALL FRAME & WINDOW TYPES	DATE: 11/1/05	FINAL PS & E
STATE PROJECT NUMBER: 1002-02-72	HWY: I-39/90	COUNTY: DANE	MADISON SAFETY & WEIGHT FACILITY NO. 16 SCALE, FEET 0	SHEET NO: 38 OF	DWG. A401

SHEET NOTES

1. PROVIDE FINISHED PLASTIC LAMINATE END PANELS, BACKSPLASH, AND SIDE SPLASHES AS REQUIRED FOR FINISHED APPEARANCE (TYP. ALL CASEWORK).
2. ALL COUNTER TOPS SHALL HAVE HOLES WITH GROMMETS EVERY 4'-0" O.C. FIELD COORDINATE LOCATIONS WITH OWNER'S REP. REFER TO SPECIFICATION SECTION 06402.
3. REFER TO ROOM FINISH SCHEDULE FOR BASE.

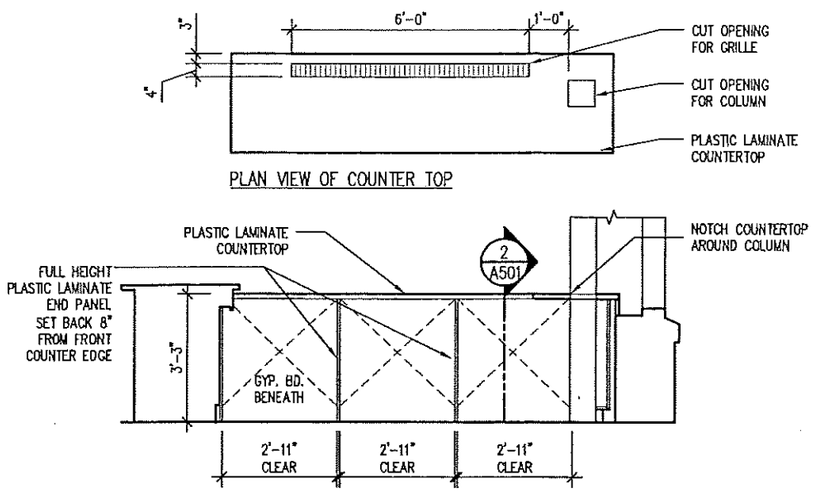

3 A402 INTERIOR ELEVATION - RM. 112
1/4" = 1'-0"

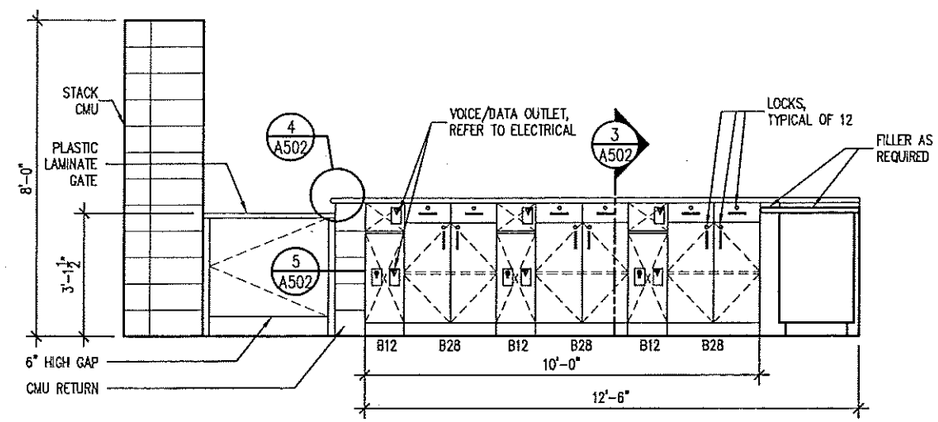

2 A402 INTERIOR ELEVATION - RM. 112
1/4" = 1'-0"

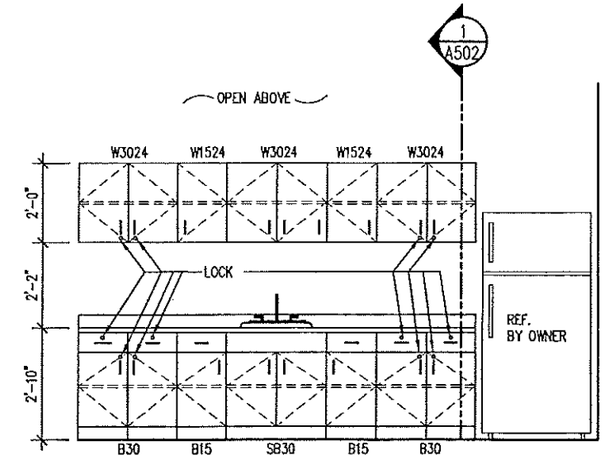

1 A402 INTERIOR ELEVATION - RM. 108
1/4" = 1'-0"

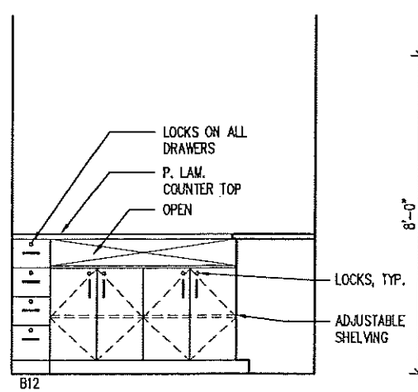

7 A402 INTERIOR ELEVATION
1/4" = 1'-0"

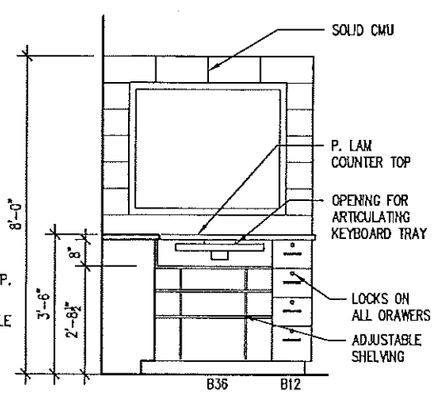

6 A402 INTERIOR ELEVATION
1/4" = 1'-0"

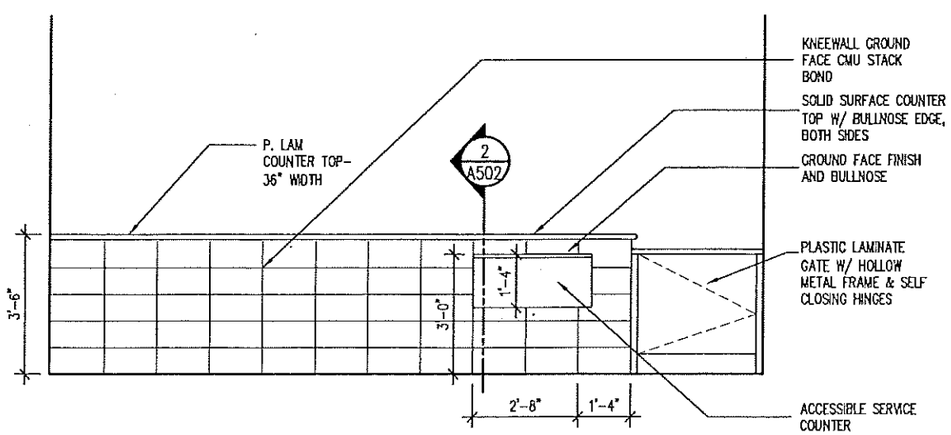

5 A402 INTERIOR ELEVATION - DRIVER'S RM - RM.113
1/4" = 1'-0"

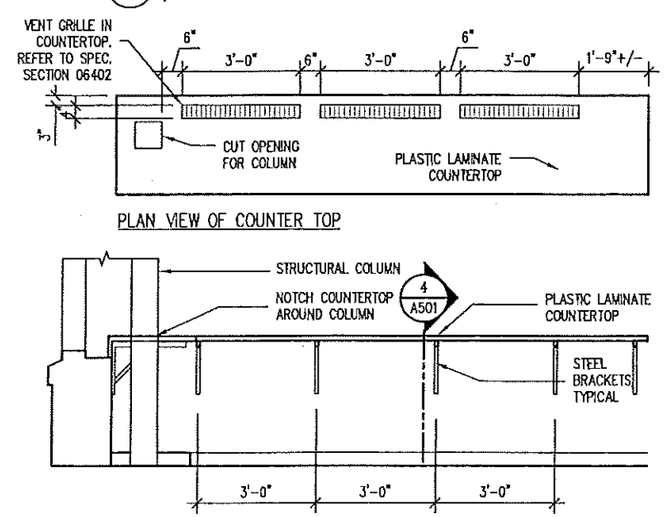

4 A402 INTERIOR ELEVATION - RM. 112
1/4" = 1'-0"

PLANS PREPARED BY: VIERBICHER ASSOCIATES, INC. REEDSBURG, WI		VAI# 001044954	INTERIOR ELEVATIONS	DATE: 11/1/05	FINAL PS & E
STATE PROJECT NUMBER: 1002-02-72	HWY: I-39/90	COUNTY: DANE	MADISON SAFETY & WEIGHT FACILITY NO. 16	SCALE, FEET 0	SHEET NO: 39 OF / DWG. A402

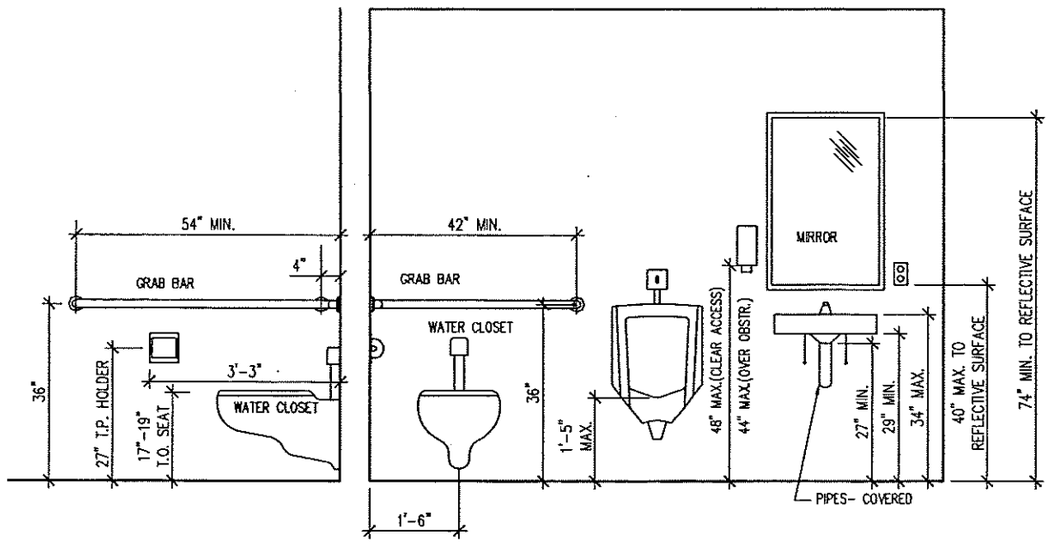

1 A403 TYPICAL PLUMBING ACCESSORY MOUNTING DIMENSIONS
3/8" = 1'-0"

NOTE: REFER TO INTERIOR ELEVATIONS FOR ACCESSORY LOCATIONS

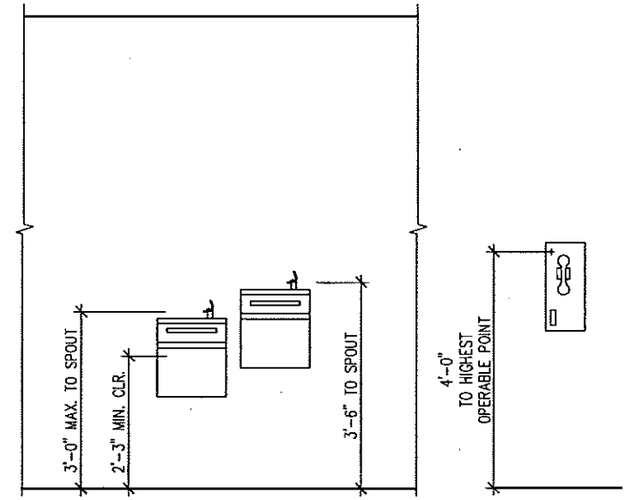

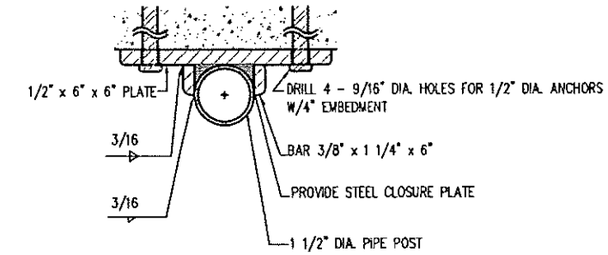

7 A403 SECTION-POST PLATE ASSEMBLY
3" = 1'-0"

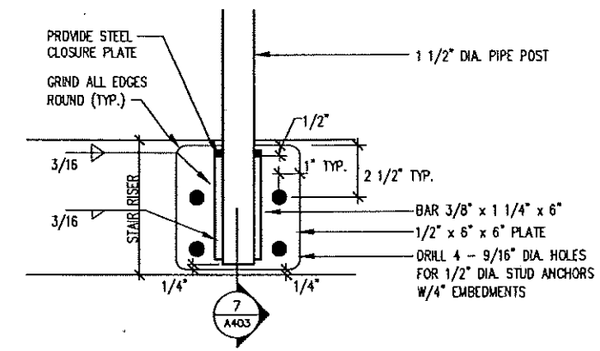

6 A403 DETAIL-POST PLATE ASSEMBLY
1-1/2" = 1'-0"

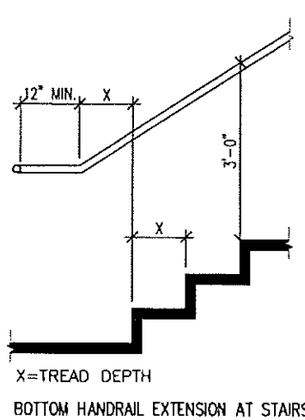

BOTTOM HANDRAIL EXTENSION AT STAIRS

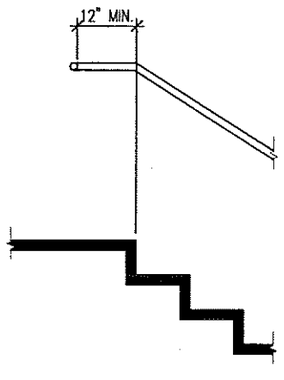

TOP HANDRAIL EXTENSIONS AT STAIR

2 A403 TYPICAL ADA HANDRAIL DIMENSIONS
3/8" = 1'-0"

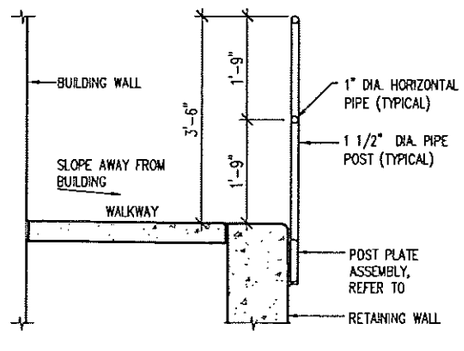

3 A403 GUARDRAIL & ANCHORAGE
3/8" = 1'-0"

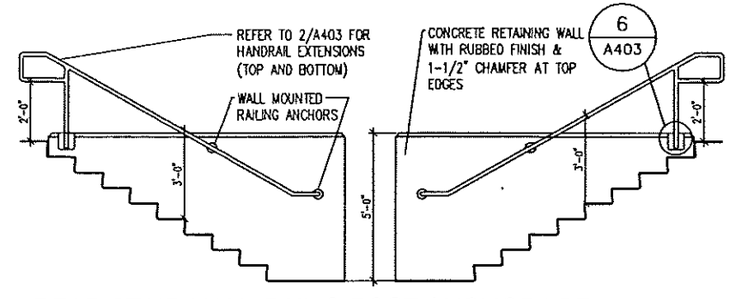

5 A403 REAR STAIR-HANDRAIL & POST ANCHORAGE
3/16" = 1'-0"

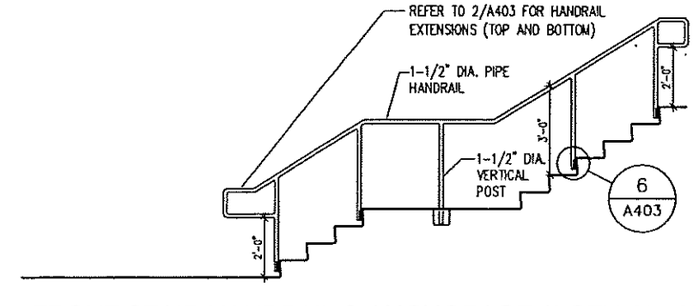

4 A403 FRONT STAIR-HANDRAIL & ANCHORAGE (BOTH SIDES)
3/16" = 1'-0"

PLANS PREPARED BY: VIERBICHER ASSOCIATES, INC. REEDSBURG, WI		VAI# 001044954	TYPICAL PLUMBING ACCESSORY MOUNTING DIMENSIONS	DATE: 11/1/05	FINAL PS & E
STATE PROJECT NUMBER: 1002-02-72	HWY: I-39/90	COUNTY: DANE	MADISON SAFETY & WEIGHT FACILITY NO. 16	SCALE, FEET 0	SHEET NO: 40 OF / DWG. A403
				REVISION: 1	DATE: 2/2/06 BY: MER

02 Feb 2006 - 4:20p C:\Documents and Settings\mrob\Desktop\Pre-Bid Revision One 1 19 06\A403_R1.dwg by: mrob

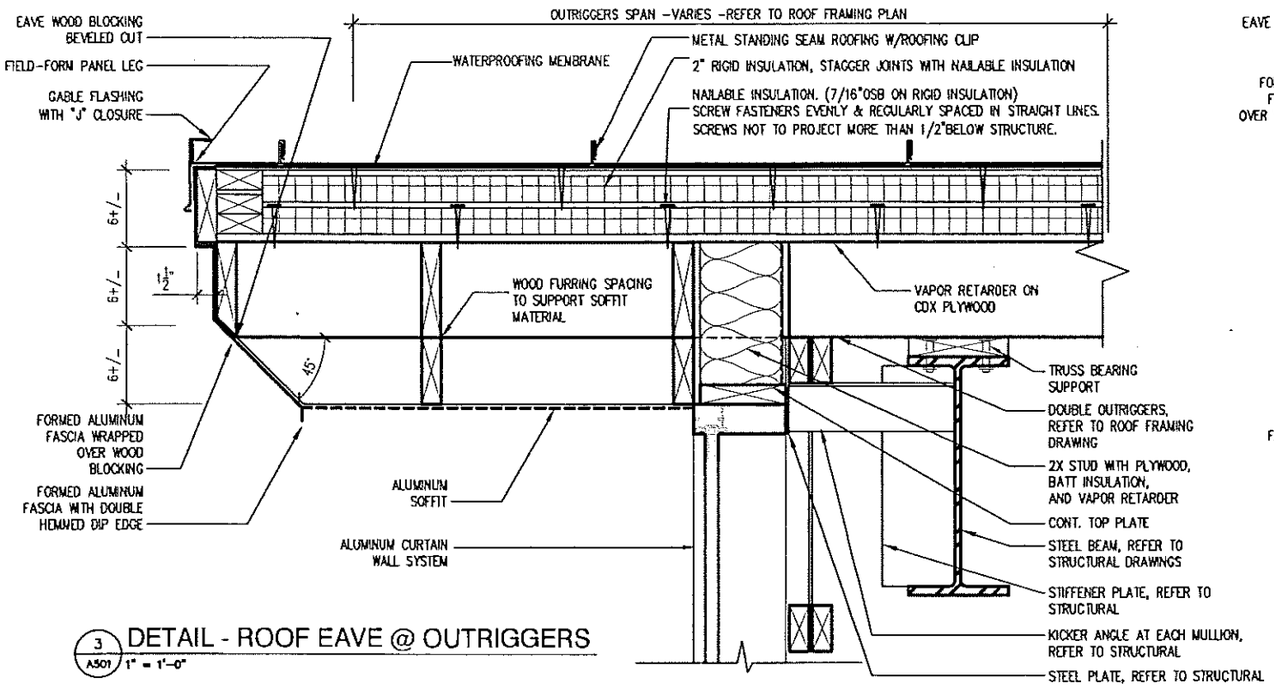

3 A501 DETAIL - ROOF EAVE @ OUTRIGGERS
1" = 1'-0"

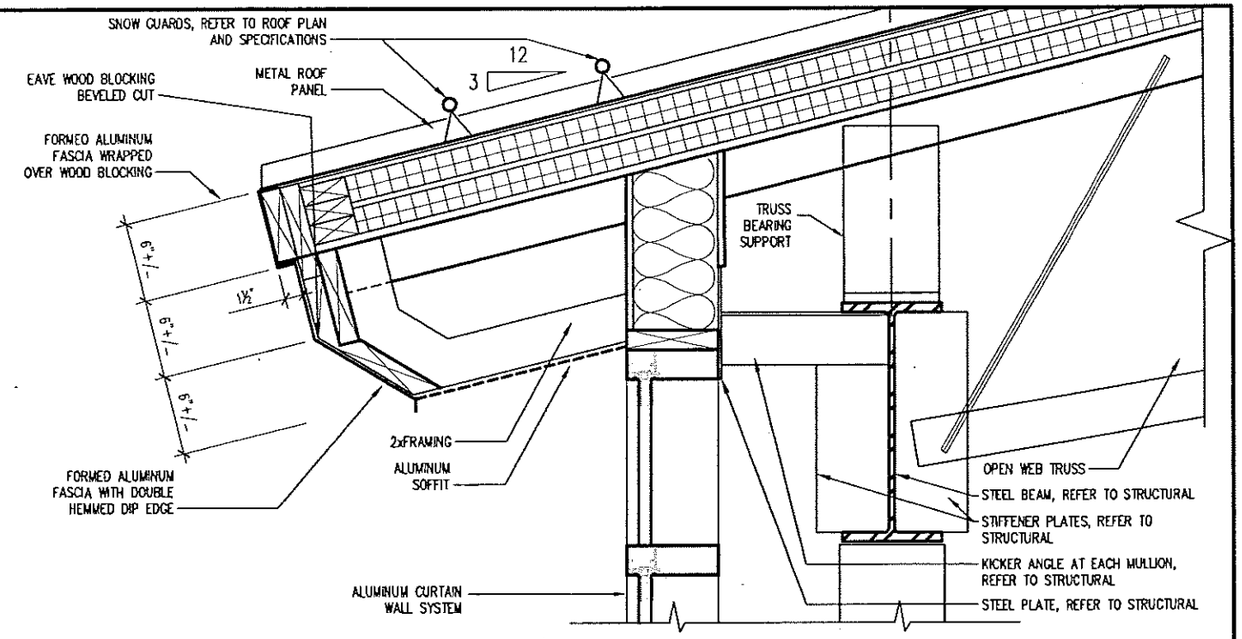

1 A501 DETAIL - ROOF OVERHANG
1" = 1'-0"

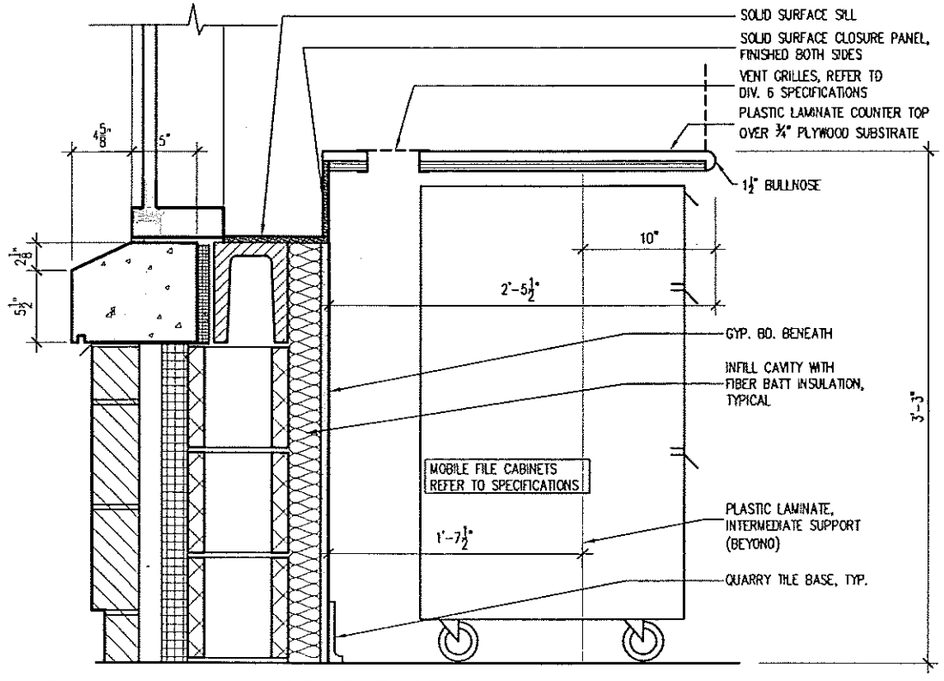

4 A501 DETAIL - COUNTER VENTILATION
1" = 1'-0"

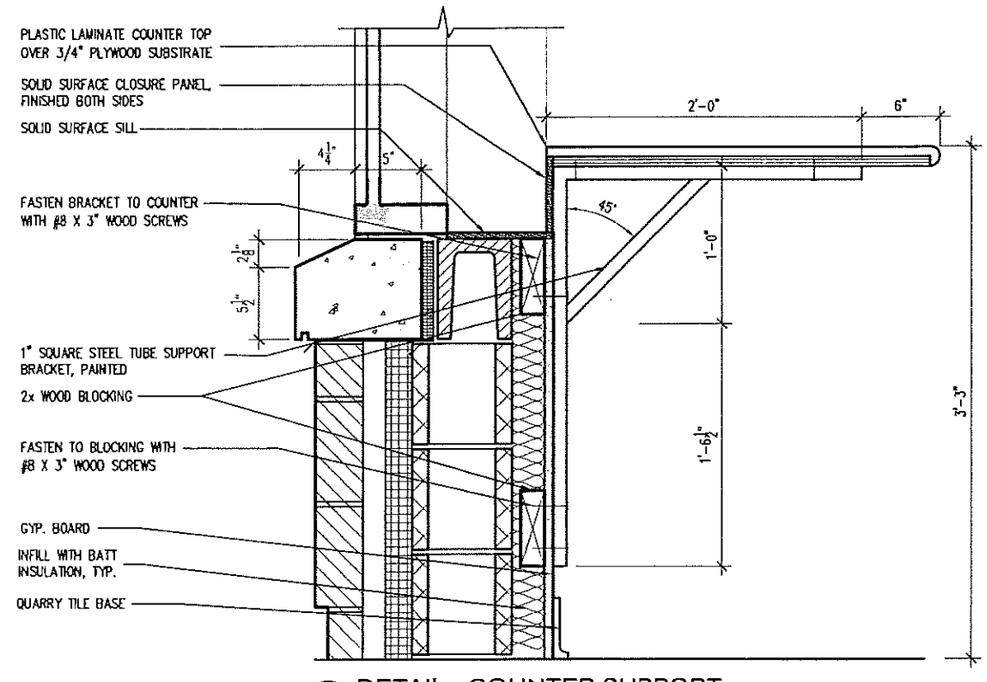

2 A501 DETAIL - COUNTER SUPPORT
1" = 1'-0"

PLANS PREPARED BY: VIERBICHER ASSOCIATES, INC. REEDSBURG, WI	VAI# 001044954	DETAILS		DATE: 11/1/05	FINAL PS & E
STATE PROJECT NUMBER: 1002-02-72	HWY: I-39/90	COUNTY: DANE	MADISON SAFETY & WEIGHT FACILITY NO. 16	SCALE, FEET 0	SHEET NO: 41 OF / DWG. A501
				REVISION: 1	DATE: 2/17/06 BY: MER

06 Mar 2006 - 2:46p C:\Documents and Settings\mrob\Desktop\Pre-Bid Revision One 1 19 D6\A501_R1.DWG by: mrob

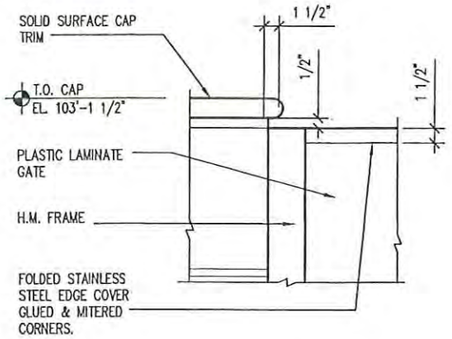

4 A502 DETAIL - CAP TRIM TO GATE
1 1/2" = 1'-0"

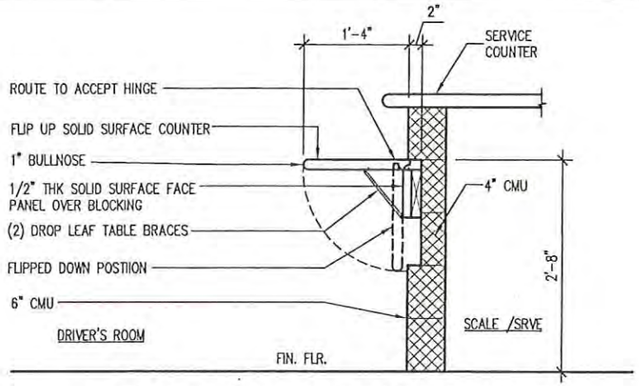

2 A502 SECTION @ ACCESSIBLE COUNTER
1/2" = 1'-0"

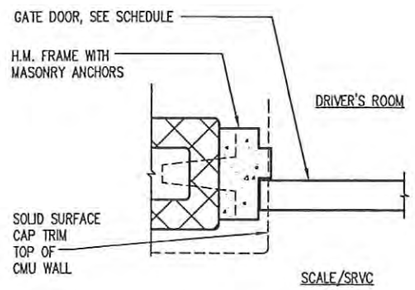

5 A502 DETAIL - GATE STOP
1 1/2" = 1'-0"

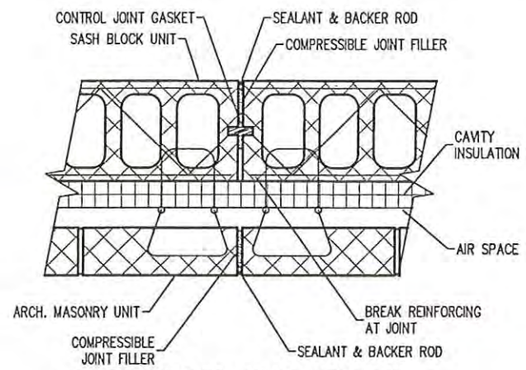

2A A502 CONTROL JOINT DETAIL
1" = 1'-0"

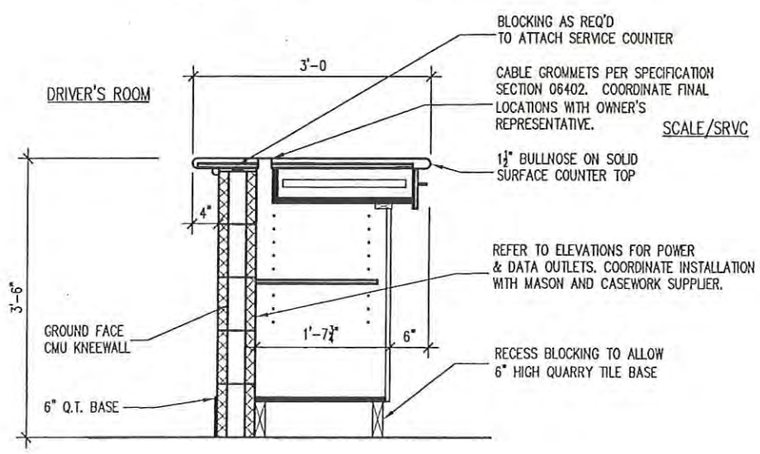

3 A502 SECTION - SERVICE COUNTER
1/2" = 1'-0"

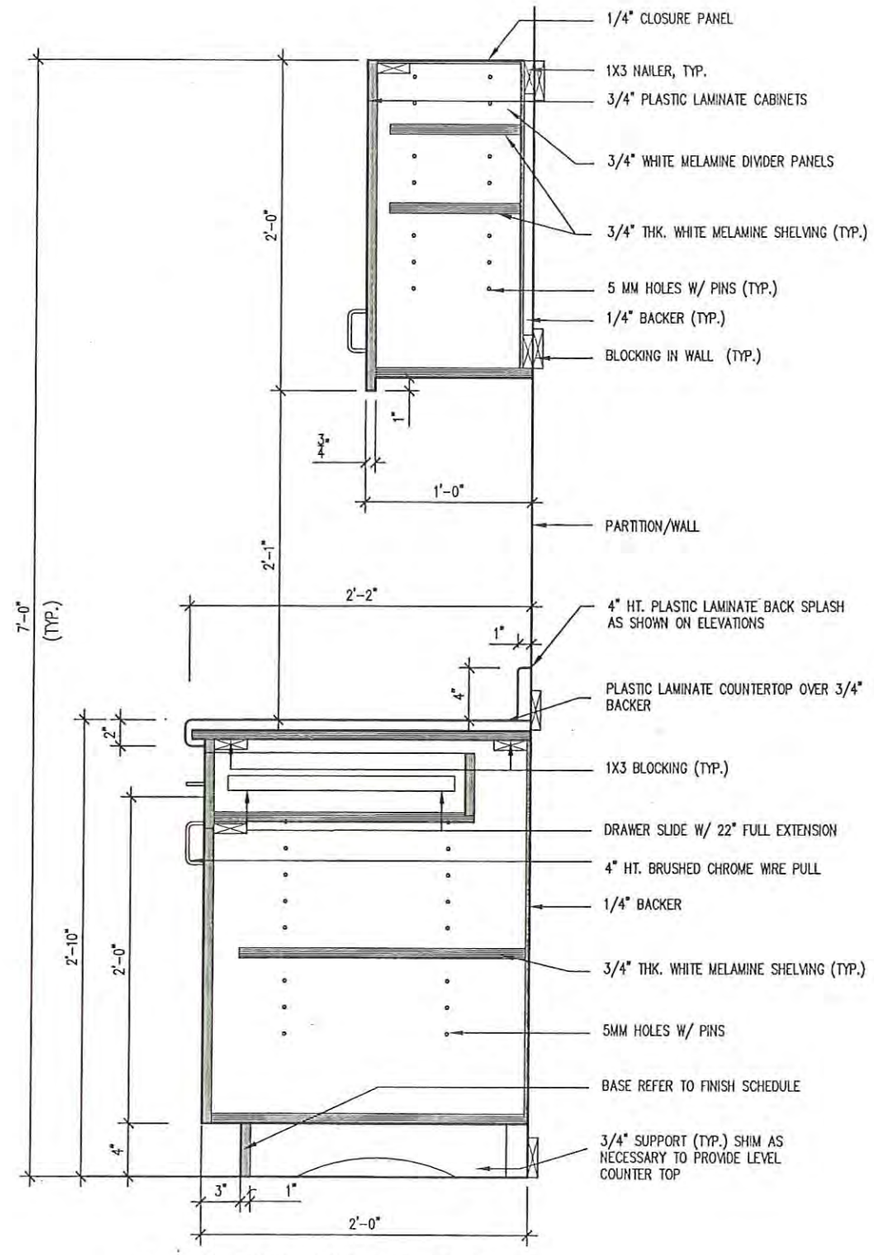

1 A502 SECTION - CABINET (TYP)
1" = 1'-0"

PLANS PREPARED BY: VIERBICHER ASSOCIATES, INC. REEDSBURG, WI		VAI# 001044954	DETAILS	DATE: 11/1/05	FINAL PS & E
STATE PROJECT NUMBER: 1002-02-72	HWY: I-39/90	COUNTY: DANE	MADISON SAFETY & WEIGHT FACILITY NO. 16	SCALE, FEET 0	SHEET NO: 42 OF / DWG. A502

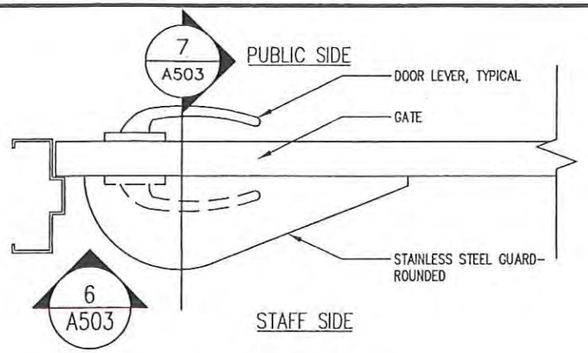

5 A503 PLAN VIEW - SERVICE GATE
1 1/2" = 1'-0"

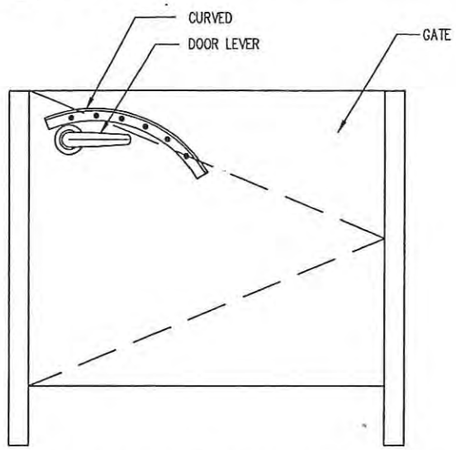

6 A503 ELEVATION - SERVICE GATE
3/4" = 1'-0"

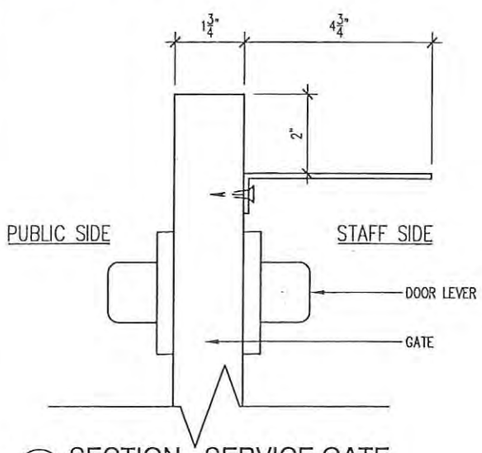

7 A503 SECTION - SERVICE GATE
3" = 1'-0"

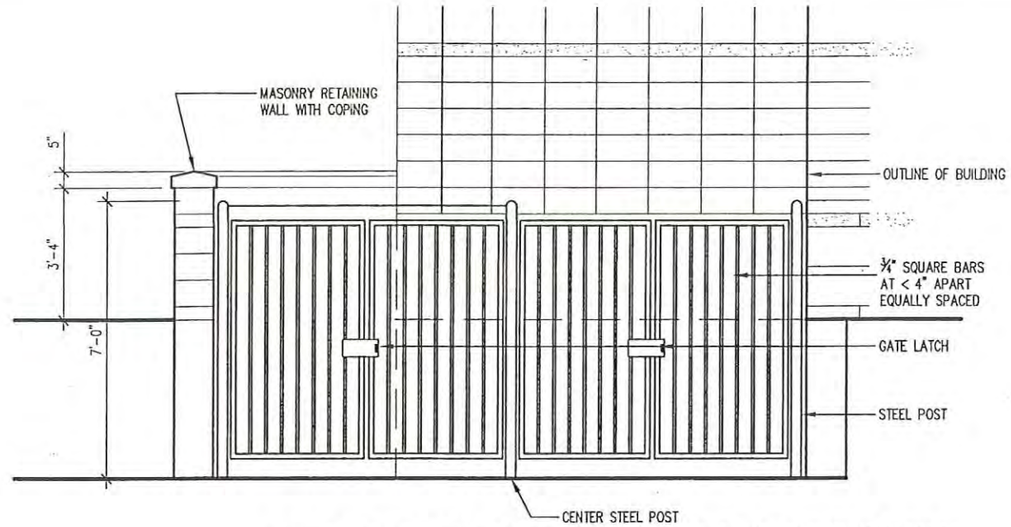

3 A503 ELEVATION - DUMPSTER GATE & RETAINING WALL
1/4" = 1'-0"

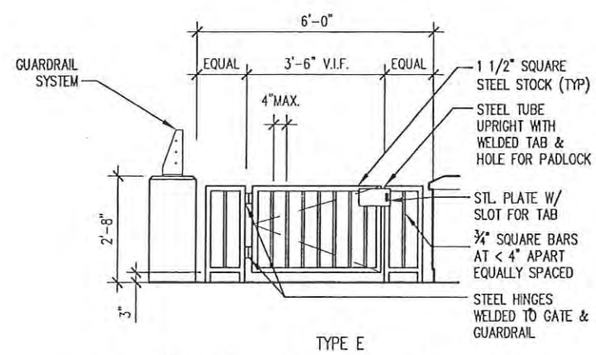

4 A503 ELEVATION - SCALE STAIR GATE
1/4" = 1'-0"

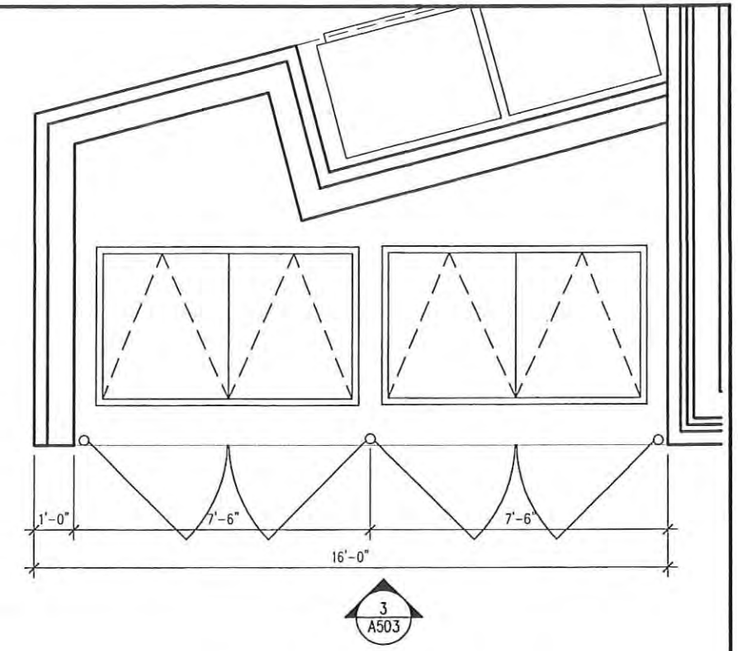

1 A503 PARTIAL PLAN - DUMPSTER GATE
1/4" = 1'-0"

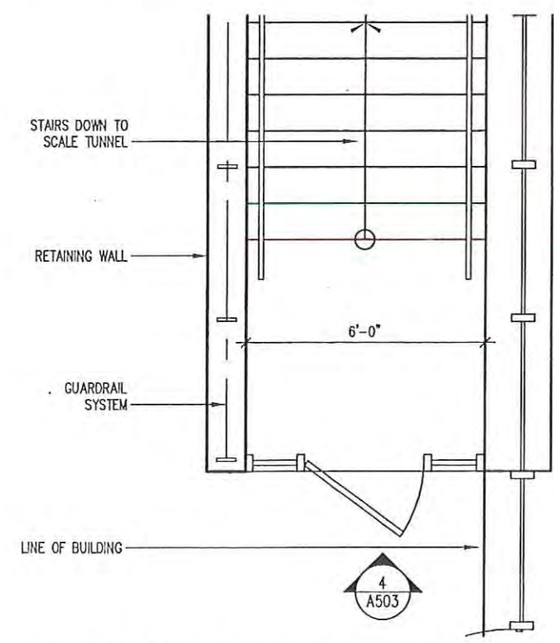

2 A503 PARTIAL PLAN - SCALE STAIR GATE
1/4" = 1'-0"

PLANS PREPARED BY: VIERBICHER ASSOCIATES, INC. REEDSBURG, WI	VAI# 001044954	DETAILS		DATE: 11/1/05	FINAL PS & E
STATE PROJECT NUMBER: 1002-02-72	HWY: I-39/90	COUNTY: DANE	MADISON SAFETY & WEIGHT FACILITY NO. 16	SCALE, FEET 0	SHEET NO: 43 OF / DWG. A503

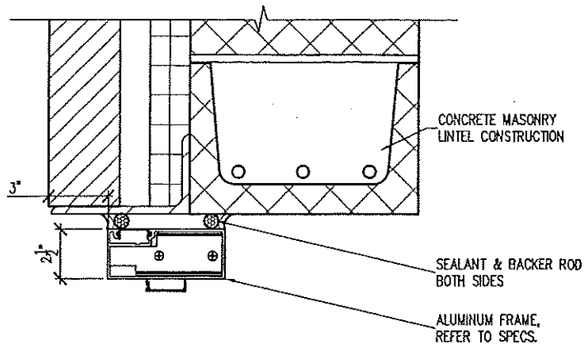

10 A504 DOOR HEAD DETAIL
1 1/2" = 1'-0"

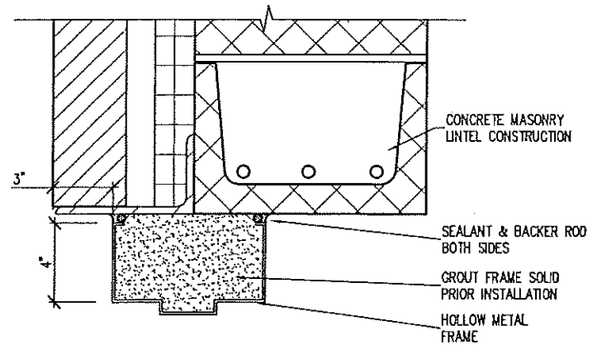

7 A504 DOOR HEAD DETAIL
1 1/2" = 1'-0"

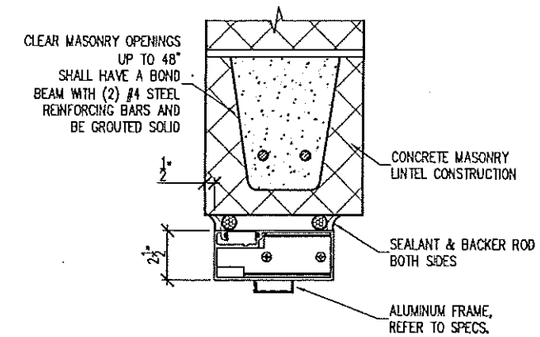

4 A504 DOOR HEAD DETAIL
1 1/2" = 1'-0"

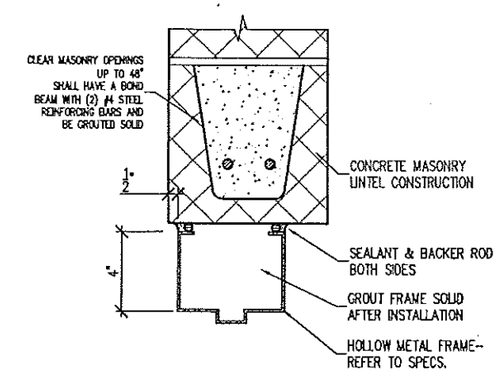

1 A504 DOOR HEAD DETAIL
1 1/2" = 1'-0"

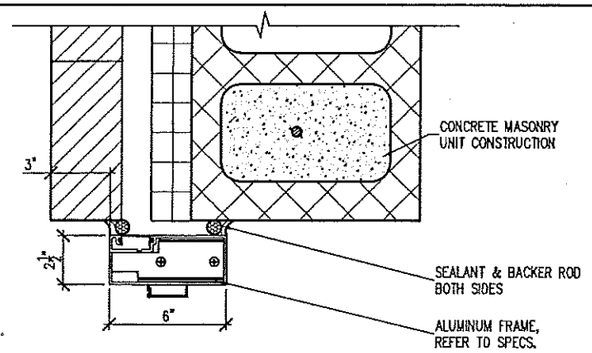

11 A504 DOOR JAMB DETAIL
1 1/2" = 1'-0"

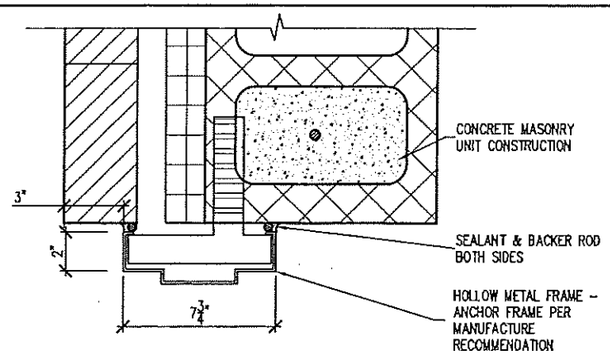

8 A504 DOOR JAMB DETAIL
1 1/2" = 1'-0"

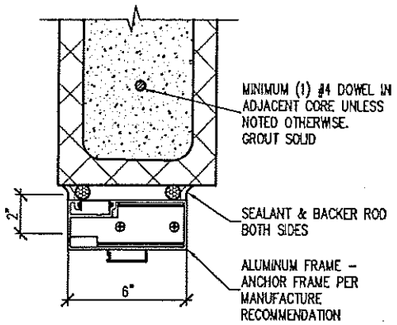

5 A504 DOOR JAMB DETAIL
1 1/2" = 1'-0"

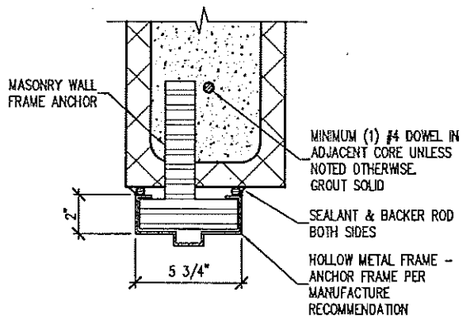

2 A504 DOOR JAMB DETAIL
1 1/2" = 1'-0"

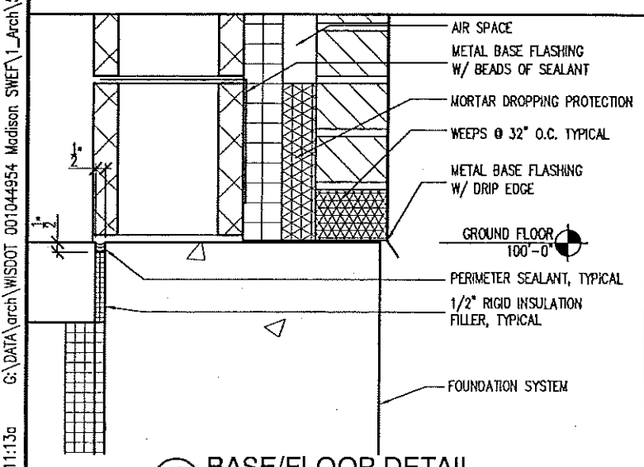

12 A504 BASE/FLOOR DETAIL
1 1/2" = 1'-0"

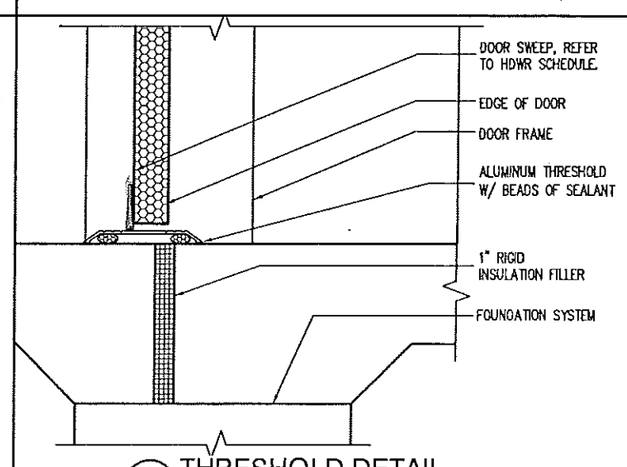

9 A504 THRESHOLD DETAIL
1 1/2" = 1'-0"

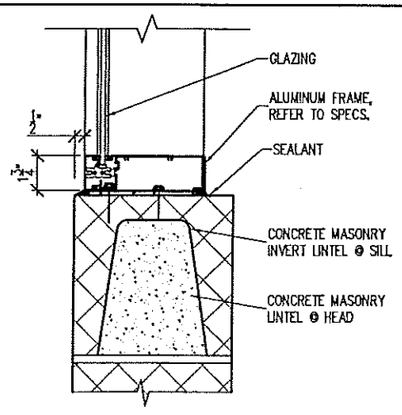

6 A504 BORROW LITE HEAD/SILL DETAIL
1 1/2" = 1'-0"

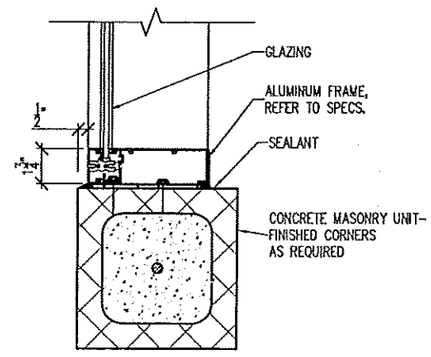

3 A504 BORROW LITE JAMB DETAIL
1 1/2" = 1'-0"

PLANS PREPARED BY: VIERBICHER ASSOCIATES, INC. REEDSBURG, WI		VAI# 001044954	DETAILS	DATE: 11/1/05	FINAL PS & E
STATE PROJECT NUMBER: 1002-02-72	HWY: I-39/90	COUNTY: DANE	MADISON SAFETY & WEIGHT FACILITY NO. 16	SCALE, FEET 0	SHEET NO: 44 OF / DWG. A504

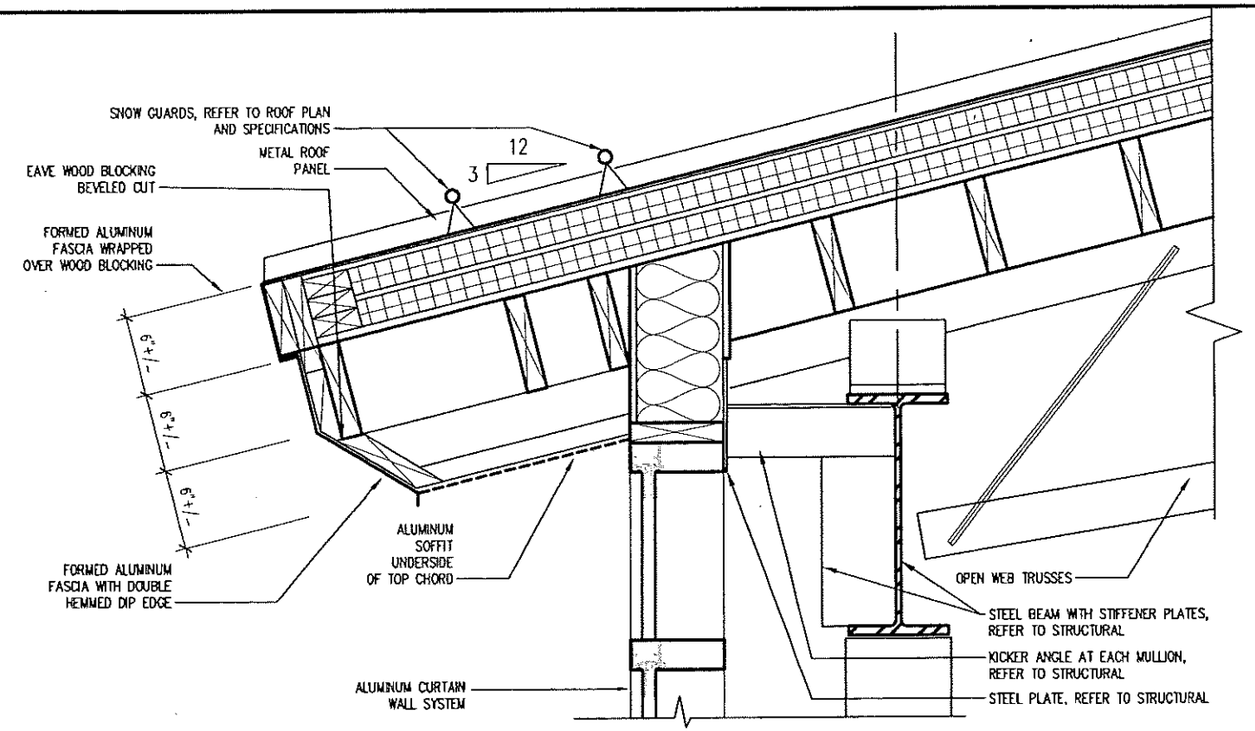

1 / A505 DETAIL - ROOF OVERHANG WITH DROPPED CHORD TRUSS
1" = 1'-0"

03 Mar 2006 - 11:34a C:\Documents and Settings\mrob\Desktop\Pre-Bid Revision One 1 19 06\A505_R1.dwg by: mrob

PLANS PREPARED BY: VIERBICHER ASSOCIATES, INC. REEDSBURG, WI		VAI# 001044954	DETAILS	DATE: 11/1/05	FINAL PS & E
STATE PROJECT NUMBER: 1002-02-72	HWY: I-39/90	COUNTY: DANE	MADISON SAFETY & WEIGHT FACILITY NO. 16 SCALE, FEET 0	SHEET NO: 45 OF	DWG. A505
				REVISION: 1 DATE: 2/17/06	BY: MER

ROOM FINISH SCHEDULE

NO.	ROOM	FLOOR	BASE	NORTH WALL		EAST WALL		SOUTH WALL		WEST WALL		CEILING			NOTES
				MATL	FINISH	MATL	FINISH	MATL	FINISH	MATL	FINISH	MATL	FINISH	HEIGHT	
100	ENTRY	QT	QT	GYP BD	PT	CMU	PT	CMU	PT	CMU	–	EXPOSED	PT	VARIES	
101	WOMEN	QT	QT	CMU	CT	CMU	CT	CMU	CT	CMU	CT	GYP BD	PT	10'-0"	
102	MEN	QT	QT	CMU	CT	CMU	CT	CMU	CT	CMU	CT	GYP BD	PT	10'-0"	
103	STORAGE	SC	–	CMU	PT	CMU	PT	CMU	PT	CMU	PT	GYP BD	PT	10'-0"	
104	TELECOMM	SC	–	CMU	PT	CMU	PT	CMU	PT	CMU	PT	GYP BD	PT	10'-0"	
105	MECH	SC	–	CMU	PT	CMU	PT	CMU	PT	CMU	PT	GYP BD	PT	10'-0"	
106	ENTRY	QT	QT	CMU	PT	CMU	PT	CMU	PT	CMU	PT	GYP BD	PT	10'-0"	
107	STAFF TOILET	QT	QT	CMU	CT	CMU	CT	CMU	CT	CMU	CT	GYP BD	PT	10'-0"	
108	TROOP/BREAK RM	QT/CPT	SVB	CMU	PT	CMU	PT	GYP BD/CMU	PT	GYP BD/CMU	PT	EXPOSED/SAT-A	PT	10'-0"	1,2
109	OFFICE	CPT	SVB	CMU	PT	GYP BD/CMU	PT	GYP BD/CMU	PT	CMU	PT	EXPOSED/SAT-A	PT	VARIES	2
110	CUST	SC	SVB	CMU	PT	CMU	PT	CMU	PT	CMU	PT	EXPOSED	PT	VARIES	
111	INTOX/RPTS	QT	QT	CMU	PT	CMU	PT	CMU	PT	CMU	PT	EXPOSED	PT	VARIES	
112	SCALE/SRVC SPACE	QT	QT	GYP BD	PT	GYP BD	PT	GYP BD	PT	CMU	PT	EXPOSED/SAT-A	PT	VARIES	2
113	DRIVER'S RM	QT	QT	GYP BD	PT	CMU	PT	CMU	PT	CMU	PT	EXPOSED/SAT-A	PT	VARIES	2
115	STAIR	CONC	–	CONC	PT	CONC	PT	CONC	–	–	–	OPEN	–	–	
116	SCALE TUNNEL														

NOTES:
1. FLOOR FINISH VARIES, REFER TO FLOOR PLAN FOR EXTENT OF EACH FINISH.
2. CEILING FINISH VARIES, REFER TO REFLECTED CEILING PLAN FOR EXTENT OF EACH FINISH.

ROOM FINISH ABBREVIATIONS:
SVB = STRAIGHT VINYL WALL BASE
SEAL = SEALED CONCRETE
CPT = CARPET
CT = CERAMIC TILE
PT = PAINT, REFER TO SPECS.
QT = QUARRY TILE
SAT = SUSPENDED ACOUSTIC TILE

1 A601 ROOM FINISH SCHEDULE
N.T.S.

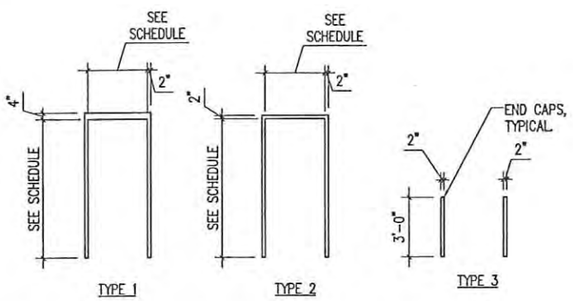

3 A601 FRAME TYPE - ELEVATIONS
1/8" = 1'-0"

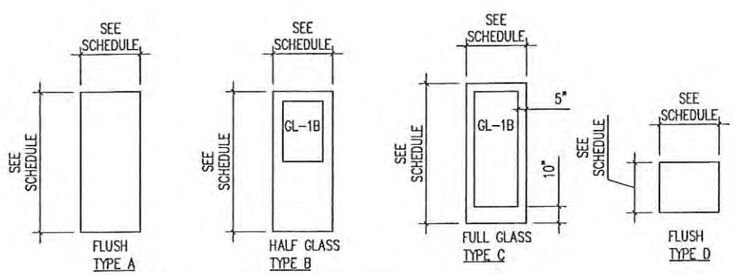

REFER TO THE SPECIFICATIONS FOR GLAZING TYPES

4 A601 DOOR TYPE - ELEVATIONS
1/8" = 1'-0"

DOOR AND FRAME SCHEDULE

NO.	DOOR SIZE WIDTH	DOOR SIZE HEIGHT	DOOR SIZE THK	DOOR MATL.	DOOR FINISH	DOOR TYPE	DOOR LOUVER	FRAME MATL	FRAME FINISH	FRAME TYPE	FRAME DETAIL HEAD	FRAME DETAIL JAMB	FRAME DETAIL SILL	FIRE RATING	HDWR SET	NOTES
100	3'-7"+/_	7'-0"	1 3/4"	ALUM	PRE FIN	C	–	ALUM	PRE FIN	–	–	–	9/A504	–	1	1
101	3'-0"	6'-10"	1 3/4"	WOOD	ST	A	–	ALUM	PRE FIN	2	10/A504	11/A504		–	3	
102	3'-0"	6'-10"	1 3/4"	WOOD	ST	A	–	ALUM	PRE FIN	2	10/A504	11/A504		–	3	
103	3'-8"	6'-8"	1 3/4"	INS. HM	PT	A	–	HM	PT	1	7/A504	8/A504	9/A504	1.5 HR.	1A	
104	3'-0"	6'-8"	1 3/4"	HM	PT	A	–	HM	PT	1	1/A504	2/A504	–	–	1B	
105	3'-8"	6'-8"	1 3/4"	INS. HM	PT	A	–	HM	PT	1	7/A504	8/A504	9/A504	–	1A	
106	3'-0"	6'-8"	1 3/4"	INS HM	PT	B	–	HM	PT	1	7/A504	8/A504	9/A504	–	1A	
107	3'-0"	6'-8"	1 3/4"	WOOD	ST	A	–	HM	PT	1	1/A5004	2/A504		–	3	
108	3'-0"	6'-8"	1 3/4"	WOOD	ST	B	–	HM	PT	1	1/A504	2/A504			2	
109	3'-0"	6'-10"	1 3/4"	WOOD	ST	A	–	ALUM	PRE FIN	2	4/A504	5/A504		–	1B	
110A	3'-0"	6'-10"	1 3/4"	WOOD	ST	A	–	ALUM	PRE FIN	2	4/A504	5/A504		–	1B	
110B	3'-0"	6'-10"	1 3/4"	WOOD	ST	A	–	ALUM	PRE FIN	2	4/A504	5/A504		–	1B	
112A	3'-9"+/_	7'-0"	1 3/4"	ALUM	PRE FIN	C	–	ALUM	PRE FIN	–			9/A504	–	1	1
112B	3'-0"	3'-4"	1 3/4"	WOOD	ST	D	–	ALUM	PRE FIN	3	–	5/A504	–	–	1D	
113	3'-1"+/_	7'-0"	1 3/4"	ALUM	PRE FIN	C	–	ALUM	PRE FIN	–	–	–	–	–	1	1
G01	3'-4"	6'-8"	1 3/4"	INS. HM	PT	A	–	HM	PT	1	1/A504	2/A504			1C	

NOTES:
1. VERIFY FINAL DOOR SIZE WITH CURTAIN WALL MANUFACTURER.

2 A601 DOOR AND FRAME SCHEDULE
N.T.S.

PLANS PREPARED BY: VIERBICHER ASSOCIATES, INC. REEDSBURG, WI	VAI# 001044954	SCHEDULES		DATE: 11/1/05	FINAL PS & E
STATE PROJECT NUMBER: 1002-02-72	HWY: I-39/90	COUNTY: DANE	MADISON SAFETY & WEIGHT FACILITY NO. 16	SCALE, FEET 0	SHEET NO: 46 OF / DWG. A601

STATE PROJECT NUMBER	SHEET NO.
1002-02-72	

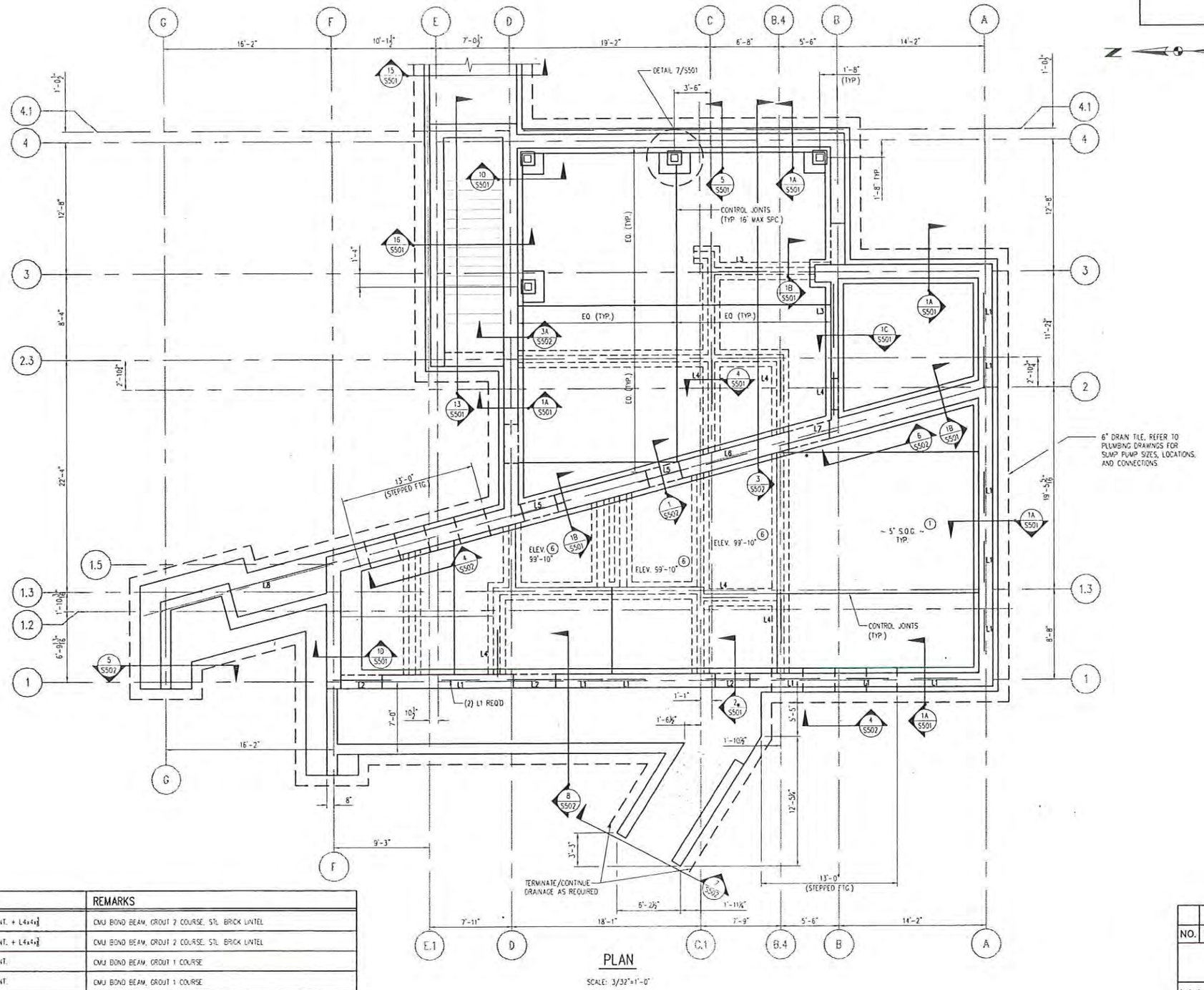

PLAN

SCALE: 3/32"=1'-0"

SHEET NOTES:

1. FOR 5" S.O.G. W/4" SAND ON VAPOR BARRIER ON 6" COMPACTED GRANULAR BASE WITH 6x6 W2.9/W2.9 W.W.F.
2. FOR RECTANGULAR FOOTINGS, REFER TO DETAILS 5 THRU 8/S501.
3. FOR SITE LOCATION REFER TO CONSTRUCTION DETAILS IN CIVIL DRAWINGS.
4. EXCAVATION FOR FOOTINGS, SUBTERRANEOUS HALLWAYS, AND PITS SHALL EXTEND BELOW EXISTING FILL TO NATIVE SOIL. (REFER TO SOIL BORINGS)
5. FOR STAIR DETAILS, SEE SECTIONS 13, 15, & 16 ON SHEET S501.
6. REFER TO ARCH. PLANS FOR RECESSED AND RAISED SLAB AREAS
7. REFER TO PLUMBING PLANS FOR SLOPING FLOORS AND FLOOR DRAINS
8. ELEVATION OF FLOOR SLABS AT 100'-0" U.N.O.

NOTE: ALL CONCRETE WORK MUST BE COORDINATED WITH PLUMBING, HEATING, AND ELECTRICAL BEFORE CONSTRUCTION BEGINS

LINTEL SCHEDULE

TYPE	DESCRIPTION	MAX. OPENING WIDTH	LINTEL	REMARKS
L1	EXT. WINDOW	5'-4"	(1) NO. 4 CONT. + L4x4x3/8	CMU BOND BEAM, GROUT 2 COURSE, STL. BRICK LINTEL
L2	EXT. DOOR	5'-4"	(1) NO. 4 CONT. + L4x4x3/8	CMU BOND BEAM, GROUT 2 COURSE, STL. BRICK LINTEL
L3	INT. WINDOW	5'-4"	(1) NO. 4 CONT.	CMU BOND BEAM, GROUT 1 COURSE
L4	INT. DOOR	5'-4"	(1) NO. 4 CONT.	CMU BOND BEAM, GROUT 1 COURSE
L5	INT. DOOR	5'-0"	(1) NO. 5 CONT. + L4x4x3/8	CMU BOND BEAM, GROUT 3 COURSE, STL. BRICK LINTEL
L6	INT. OPENING	5'-0"	(1) NO. 5 CONT. + L4x4x3/8	CMU BOND BEAM, GROUT 3 COURSE, STL. BRICK LINTEL
L7	INT. CORRIDOR	5'-0"	(1) NO. 5 CONT. + L4x4x3/8	CMU BOND BEAM, GROUT 3 COURSE, STL. BRICK LINTEL
L8	EXT. OPENING	10'-0"	DBL 2x12'S	WOOD BEAMS (2 SECTIONS)

NO.	DATE	REVISION	BY

STATE OF WISCONSIN
DEPARTMENT OF TRANSPORTATION
STRUCTURES DESIGN SECTION

MADISON S&W FACILITY, NO. 16

CONST. SPEC.	DRAWN BY	PLANS CK'D.
IBC 2003	SWS	JWC

FOUNDATION PLAN

SHEET S101

STATE PROJECT NUMBER	SHEET NO.
1002-02-72	

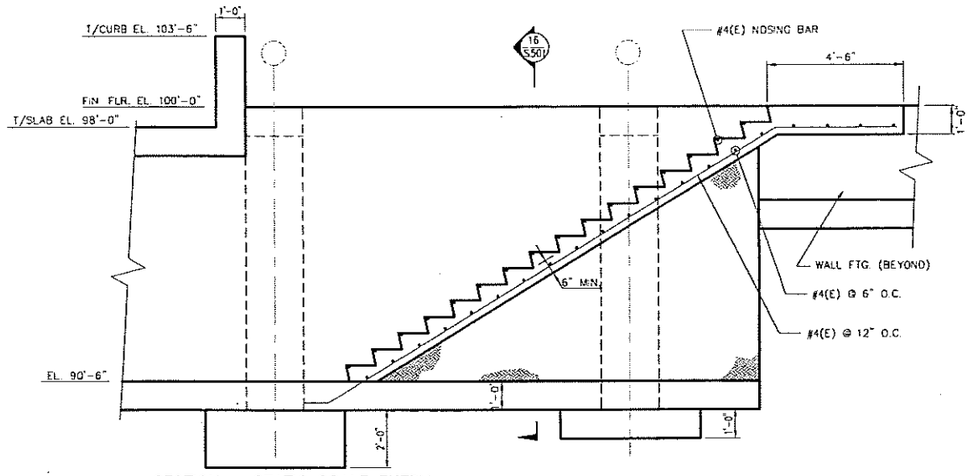

13 SECTION – STATIC SCALE ENTRY

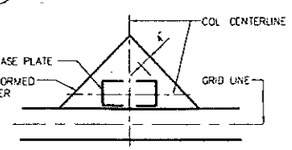

14 TYPICAL ISOLATION JOINT AT EXT. COLUMN

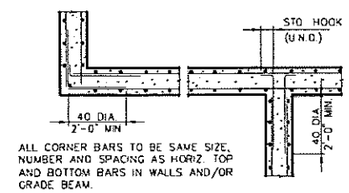

ALL CORNER BARS TO BE SAME SIZE, NUMBER AND SPACING AS HORIZ. TOP AND BOTTOM BARS IN WALLS AND/OR GRADE BEAM.

9 TYPICAL CORNER BAR DETAIL

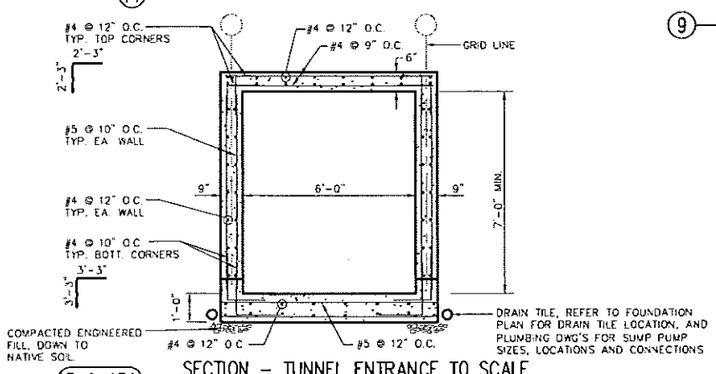

15 & 15A SECTION – TUNNEL ENTRANCE TO SCALE

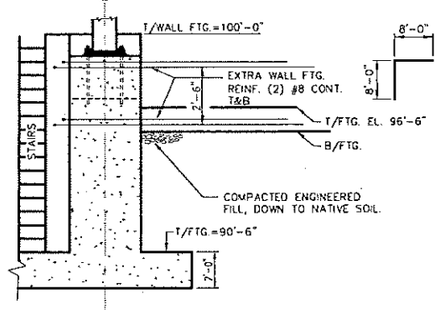

10 TYPICAL STEPPED DETAIL @ FTG.
FOR COL'S. ON FTG. F11, AND F15 COL'S. B1 TO C1, AND COL D3

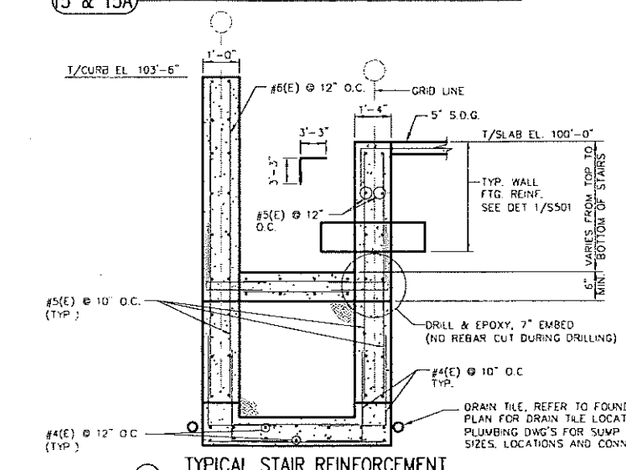

16 TYPICAL STAIR REINFORCEMENT SECTION DETAIL

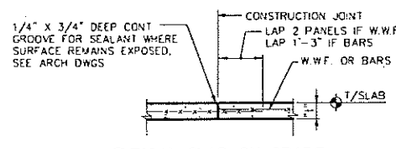

TYPICAL SLAB ON GRADE CONSTRUCTION JOINT

11

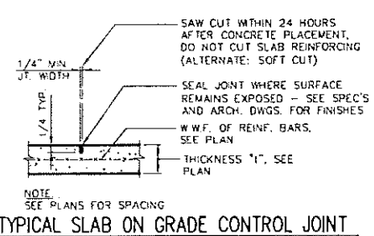

NOTE:
SEE PLANS FOR SPACING

12 TYPICAL SLAB ON GRADE CONTROL JOINT

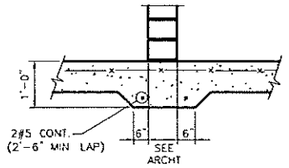

4 THICKENED SLAB UNDER CMU WALL OR STAIR
SEE ARCHITECTURAL DRWGS FOR LOCATION OF WALLS / STAIRS

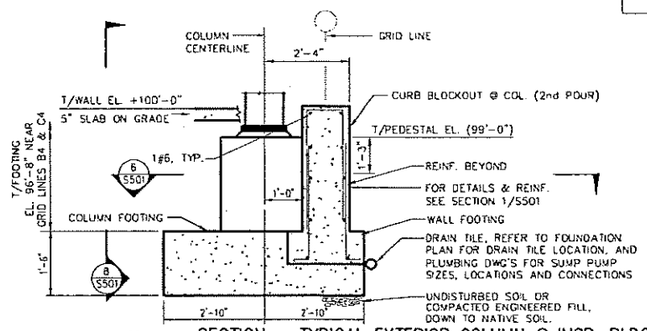

5 SECTION – TYPICAL EXTERIOR COLUMN @ INSP. BLDG.

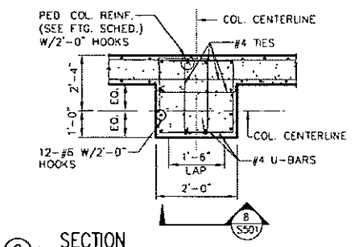

6 SECTION

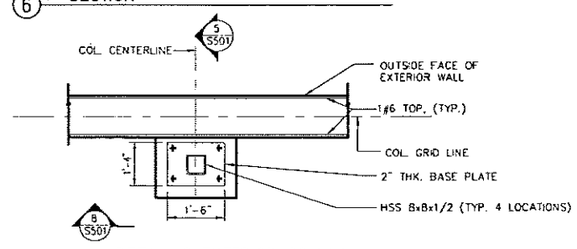

7 DETAIL @ EXTERIOR COLUMN

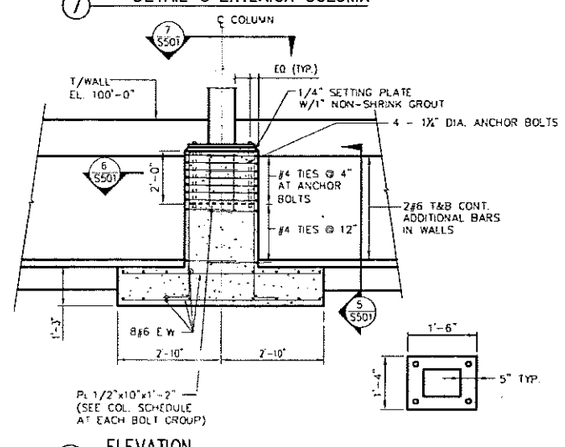

8 ELEVATION

WALL SECTION FOOTING CHART

SECTION	"A"	"B"	"C"	"D"	"E"
1A	1'-4"	2'-4"	6"	1'-0"	96'-8"
1B	1'-8"	2'-8"	6"	1'-0"	96'-8"
1C	8"	1'-8"	6"	1'-0"	96'-8"
1D	1'-4"	5'-0"	2'-0"	2'-0"	92'-4"

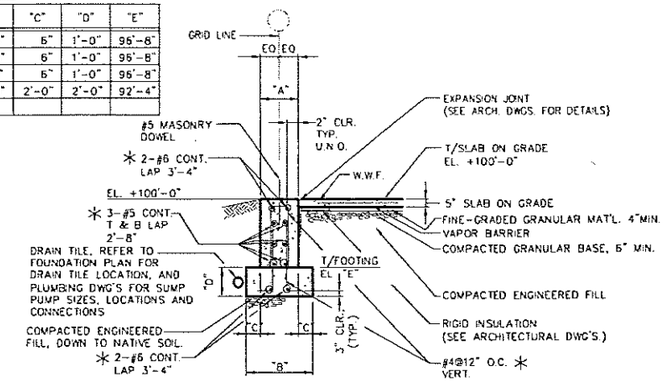

1 SECTION – TYPICAL WALL FOOTING
NOTE: TRANSITION FROM B/FTG ELEVATIONS OF SECTIONS 1A TO 1D AND 1B TO 1D SHALL BE OVER AT LEAST 13'-0". SEE SHEET S101.
* – FOR 1D REINF., SEE SECTION 5/S502

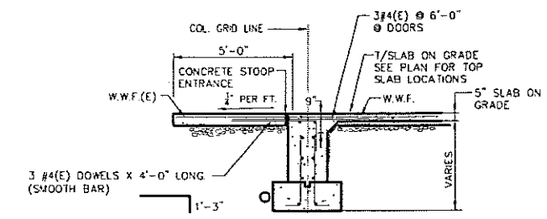

2 SECTION – TYPICAL WALL FOOTING @ ENTRANCES
FOR DETAILS & REINF., SEE SECTION 1/S501

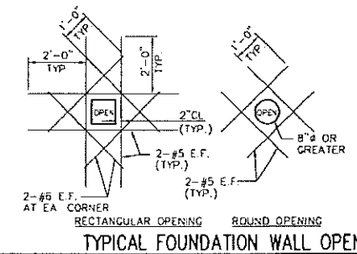

3 TYPICAL FOUNDATION WALL OPENINGS

NO.	DATE	REVISION	BY

STATE OF WISCONSIN
DEPARTMENT OF TRANSPORTATION
STRUCTURES DESIGN SECTION

MADISON S&W FACILITY, NO. 16

CONST. SPEC. IBC 2003	DRAWN BY SWS	PLANS CK'D. JWC

FOUNDATION DETAILS

SHEET S501

STATE PROJECT NUMBER	SHEET NO.
1002-02-72	

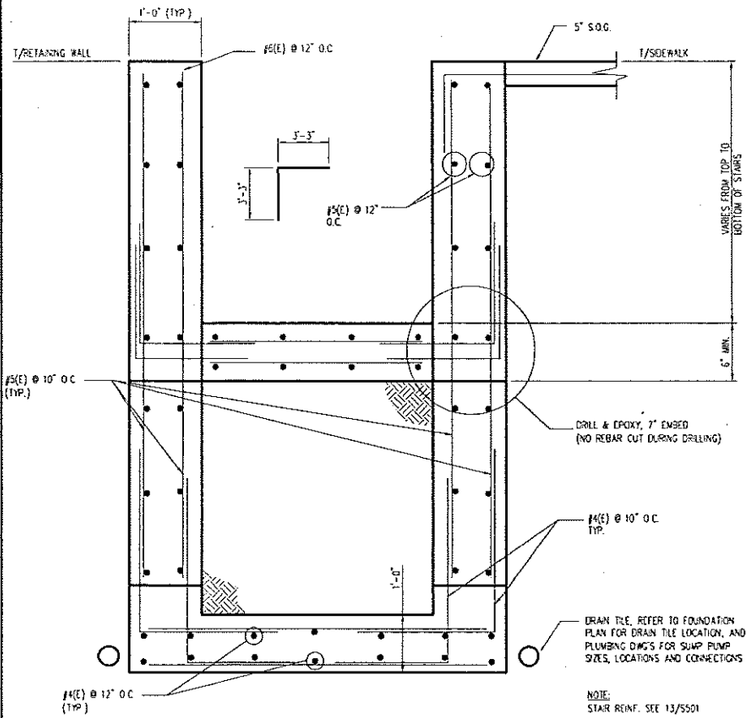

7 TYPICAL STAIR REINF. @ RETAINING WALL

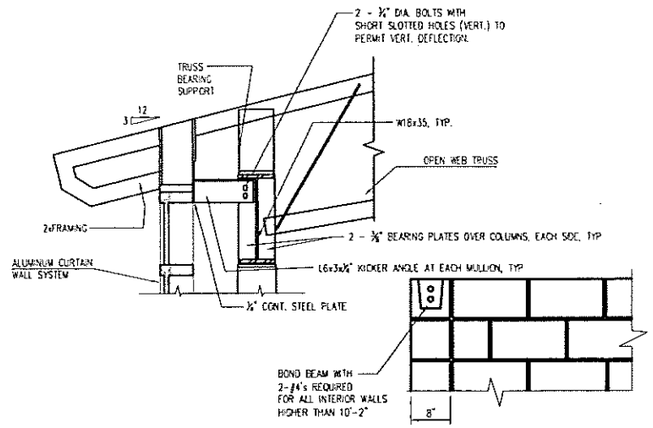

3 SECTION - TYP. ROOF SECTION
(LOOKING SOUTH)

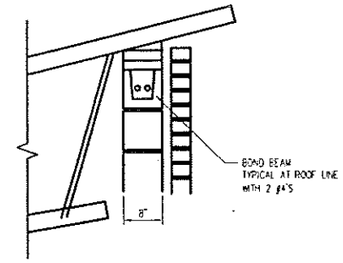

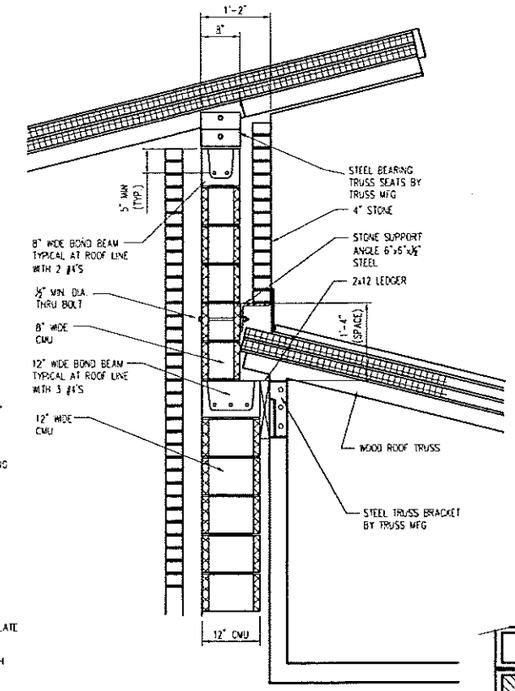

1 SECTION - TYPICAL STANDARD ROOF JOIST CONNECTION

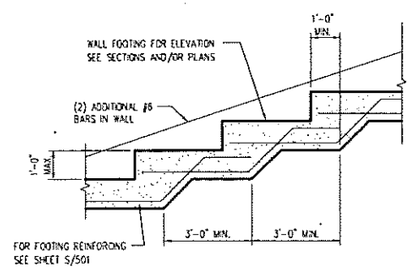

4 STEPPED WALL FOOTING DETAIL

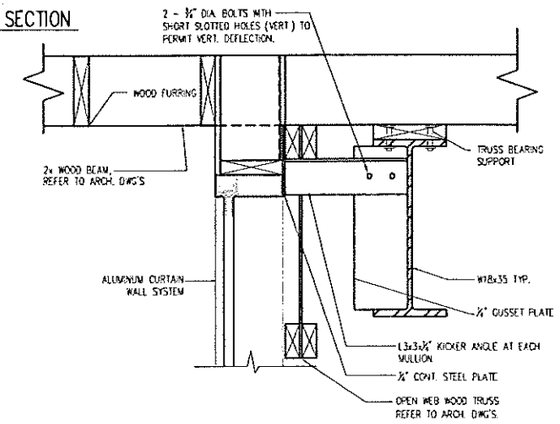

3A SECTION - TYPICAL ROOF SECTION
(LOOKING EAST)

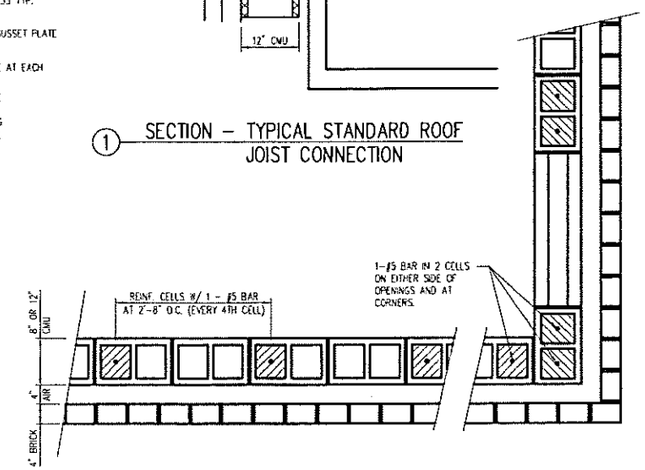

2 SECTION - CMU WALL REINF. DETAIL
FOR ALL EXTERIOR MASONRY WALLS, AND DIAGONAL MASONRY WALL FROM COL. LINES A2 TO F1.5. DOWEL REINFORCEMENT (6" EMBED) INTO WALL FOOTING

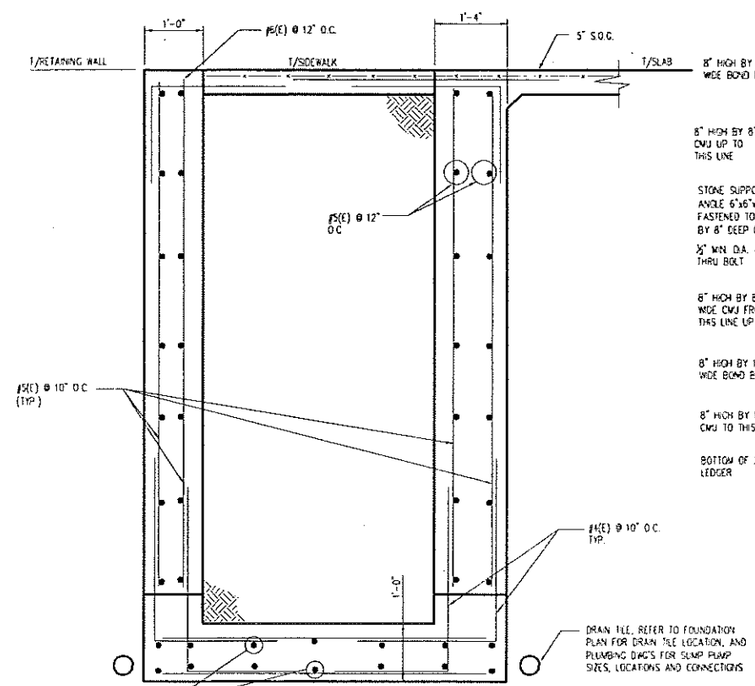

8 SECTION - RETAINING WALL/BUILDING FOOTING

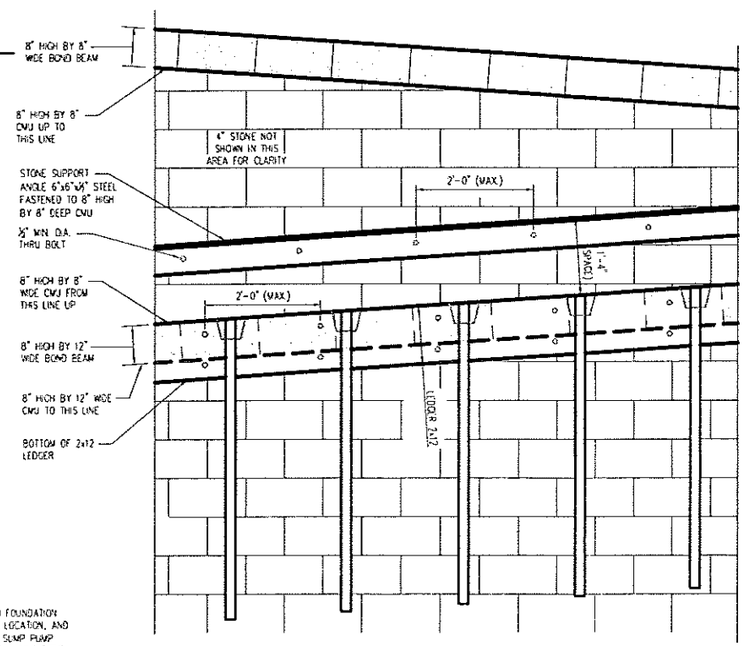

6 ELEVATION - LEDGER CONNECTION

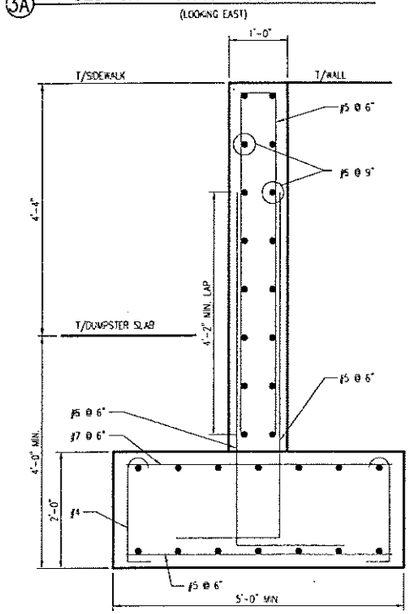

5 SECTION - RETAINING WALL

NO.	DATE	REVISION	BY

STATE OF WISCONSIN
DEPARTMENT OF TRANSPORTATION
STRUCTURES DESIGN SECTION

MADISON S&W FACILITY, NO. 16

CONST. SPEC.	IBC 2003	DRAWN BY	SWS	PLANS CK'D.	JWC

WALL/ROOF DETAILS

SHEET S502

STATE PROJECT NUMBER	SHEET NO.
1002-02-72	

GENERAL NOTES:

1. SHOP DRAWINGS PREPARED BY THE CONTRACTORS, SUPPLIERS, ETC., WILL BE REVIEWED BY THE DESIGN TEAM FOR CONFORMANCE WITH THE DESIGN CONCEPT ONLY. NO WORK SHALL BE STARTED WITHOUT SUCH REVIEW.
2. THE GENERAL CONTRACTOR, PRIOR TO SUBMISSION TO THE DESIGN TEAM, SHALL REVIEW SHOP DRAWINGS PREPARED BY SUPPLIERS OR THE GENERAL CONTRACTOR.
3. SEE ARCHITECTURAL, MECHANICAL AND ELECTRICAL DRAWINGS AS WELL AS STRUCTURAL DRAWINGS FOR LINTELS, SHELF ANGLES, SIZE AND LOCATION OF FLOOR SLOPES, DEPRESSED AREAS, FLOOR DRAINS, FLOOR FILLS AND FINISHES, CURBS, CHAMBERS, TRENCHES, PITS, GROOVES, OPENINGS, SLEEVES, HANGERS, CONDUIT RUNS IN WALLS OR SLABS, MACHINE OR EQUIPMENT SUPPORTS, EQUIPMENT PADS, INSERTS AND OTHER EMBEDDED ITEMS.
4. UNLESS OTHERWISE SHOWN OR NOTED, THE GENERAL CONTRACTOR SHALL BE RESPONSIBLE FOR COORDINATING THE LOCATION AND PLACEMENT OF THE ABOVE ITEMS.

ELEVATIONS

5. ALL ELEVATIONS SHOWN ON THE STRUCTURAL DRAWINGS ARE BASED ON FINISHED FIRST FLOOR ELEVATION 100'-0", WHICH EQUALS ELEVATION 897.00' ON THE ROADWAY DRAWINGS.

FOUNDATIONS

6. ALLOWABLE FOUNDATION LOADS: ALL FOOTINGS ARE DESIGNED FOR AN ALLOWABLE BEARING PRESSURE OF 4000 P.S.F. (DEAD LOAD) AND/OR 4000 P.S.F. (DL&LL).
7. REFER TO THE ROADWAY DRAWINGS, SPECIFICATIONS, SUBSURFACE EXPLORATION REPORTS, AND TEST BORINGS FOR EXCAVATION, SUBSURFACE PREPARATION, AND GRANULAR FILL REQUIREMENTS.
8. THE TEST BORING RECORDS IN THE SOILS REPORT ARE FOR INFORMATION ONLY AND ARE NOT GUARANTEED TO REPRESENT ALL CONDITIONS THAT WILL BE ENCOUNTERED.
9. ANCHOR BOLTS SHALL BE SET, AND CONCRETE BEARING SURFACES FOR COLUMNS SHALL BE FINISHED, TO THE FOLLOWING TOLERANCES:
   A. TOP OF CONCRETE ±3/8"
   B. TOP OF ANCHOR BOLTS +1" TO -3/8"
   C. OUT OF POSITION OF BOLTS ±1/8"
10. WATERSTOPS SHALL BE PROVIDED AT ALL WALL CONSTRUCTION JOINTS BELOW GRADE AND AT ALL JOINTS SO DETAILED ON THE DRAWINGS. WATERSTOP SHALL BE 6" PVC DOUBLE DUMBBELL TYPE.
11. CONCRETE FOR ANY FOOTING SHALL NOT BE POURED ON FROZEN GROUND OR WHEN WATER IS PRESENT.
12. BUILDING IS CONSTRUCTED ON ENGINEERED FILL. UNSUITABLE EXISTING TOP LAYER SHALL BE EXCAVATED, FILLED WITH A COMPACTED ENGINEERED FILL TO FLOOR SLAB LEVEL, AND THEN EXCAVATED AT FOOTINGS, PITS, HALLWAYS AND STAIRS TO POUR CONCRETE. COORDINATE WITH ROADWAY PLANS AND SPECIFICATIONS.

CONCRETE

13. THE CONTRACTOR SHALL SUBMIT PLANS SHOWING THE LOCATION OF ALL CONSTRUCTION JOINTS FOR THE ENGINEER'S APPROVAL PRIOR TO CONSTRUCTION.
14. REINFORCING STEEL SHALL BE CONTINUOUS THROUGH ALL CONSTRUCTION JOINTS.
15. WHERE A JOINT IS MADE, THE SURFACE OF THE CONCRETE SHALL BE ROUGHENED, THOROUGHLY CLEANED, AND ALL LAITANCE REMOVED. IN ADDITION, VERTICAL JOINTS SHALL BE THOROUGHLY WETTED AND SLUSHED WITH A COAT OF NEAT CEMENT GROUT IMMEDIATELY BEFORE PLACING NEW CONCRETE.
16. ALL FOOTINGS, WALLS AND SLABS ON GRADE SHALL BE NORMAL WEIGHT CONCRETE HAVING A MINIMUM COMPRESSIVE STRENGTH OF 4,000 P.S.I.
17. THE CONTRACTOR SHALL SUBMIT MIX DESIGNS FOR REVIEW PRIOR TO ORDERING CONCRETE.
18. CONCRETE SHALL NOT HAVE ANY CHLORIDE ADDITIVE.
19. ALL REINFORCING BARS SHALL BE ASTM A615 (GRADE 60)
20. THE ARRANGEMENT OF ACCESSORIES SHALL BE IN ACCORDANCE WITH A.C.I. MANUAL OF STANDARD PRACTICE FOR DETAILING REINFORCED CONCRETE STRUCTURES. ANY PART OF AN ACCESSORY WHICH WILL BE EXPOSED ON ANY CONCRETE SURFACE AFTER REMOVAL OF THE FORMS SHALL BE GALVANIZED OR PLASTIC TIPPED.
21. THE MINIMUM PROTECTIVE COVERING FOR MAIN REINFORCING STEEL SHALL BE AS FOLLOWS:
   A. WHERE CONCRETE IS PLACED AGAINST GROUND, 3".
   B. FOR CONCRETE DEPOSITED AGAINST FORMS, BUT WHICH WILL BE EXPOSED TO WEATHER OR IN CONTACT WITH THE GROUND AFTER REMOVAL OF THE FORMS, 2".
   C. FOR WALLS AND SLABS, EXCEPT AS NOTED ABOVE OR ON DETAILS, 1 1/2".
22. ALL SLABS ON GRADE SHALL BE REINFORCED WITH 6x6-W2.9xW2.9 WELDED WIRE FABRIC. REINFORCEMENT SHALL BE PLACED 1 1/2" CLEAR FROM TOP OF SLAB. FILL SHALL BE COMPACTED TO A MINIMUM OF 95% MAXIMUM DENSITY (ASTM D1557-70, MODFIED PROCTOR). THE MINIMUM MODULUS OF SUBGRADE REACTION, K, SHOULD BE GREATER THAN 200pci. PROVIDE KEYED CONSTRUCTION JOINTS AND LAP MESH. POUR SLABS IN AN ALTERNATE LONG-STRIP PATTERN. THE CONTRACTOR SHALL SUBMIT PLANS SHOWING THE LOCATION OF ALL CONSTRUCTION JOINTS FOR THE ENGINEER'S APPROVAL PRIOR TO CONSTRUCTION.
23. SUBMIT REINFORONG SHOP DETAIL PLANS FOR REVIEW. CONCRETE SHALL NOT BE PLACED WITHOUT PRIOR APPROVAL OF THE ENGINEER.
24. SLOPE CONCRETE SLABS TO ANY FLOOR DRAINS SHOWN ON ARCHITECTURAL DRAWINGS.
25. SEE SPECIFICATION DIVISION 3 "CAST-IN-PLACE CONCRETE" FOR GENERAL REQUIREMENTS.
26. CONCRETE CONSTRUCTION SHALL CONFORM TO THE REQUIREMENTS OUTLINED IN THE LATEST EDITION OF THE "BUILDING CODE REQUIREMENTS FOR REINFORCED CONCRETE" (ACI 318).
27. ALL WELDED WIRE FABRIC SHALL BE LAPPED TWO (2) FULL MESH PANELS AND TIED SECURELY.
28. THE CONTRACTOR SHALL NOT WELD REINFORCING STEEL WITHOUT PRIOR WRITTEN APPROVAL BY THE ENGINEER.
29. ALL WELDED WIRE FABRIC SHALL CONFORM TO ASTM A186.
30. WELDED WIRE FABRIC AT EXTERIOR EXPOSED SLABS SHALL BE COATED CONFORMING TO ASTM A775-81.
31. ALL REINFORCING BARS SHALL BE NEW BILLET STEEL CONFORMING TO ASTM A615, GRADE 60. REINFORCING AT EXTERIOR EXPOSED CONCRETE SHALL BE EPOXY-COATED CONFORMING TO ASTM A775.
32. PROVIDE VAPOR BARRIER OF 8 MIL MINIMUM THICKNESS POLYETHYLENE FILM WITH FIBERGLASS REINFORCING ON APPROVED SUBGRADE FOR ALL SLABS ON GRADE.

STRUCTURAL STEEL

33. ALL STRUCTURAL STEEL SHALL BE DETAILED, FABRICATED AND ERECTED IN ACCORDANCE WITH THE LATEST A.I.S.C. SPECIFICATION.
34. ALL STRUCTURAL STEEL "W" SHAPES SHALL BE ASTM A992. ALL STRUCTURAL STEEL PLATES, ANGLES, CHANNELS, AND TEES SHALL BE ASTM A36, UNLESS NOTED OTHERWISE. ALL STRUCTURAL TUBING SHALL BE ASTM A500, GRADE B, COLD FORMED.
35. ALL BEAMS SHALL BE FABRICATED WITH NATURAL CAMBER UP.
36. HIGH STRENGTH STEEL BOLTS SHALL BE ASTM A325. USE ONE HARDENED WASHER UNDER THE TURNED PORTION OF THE CONNECTION BOLT.
37. NO CONNECTION SHALL CONSIST OF LESS THAN TWO 3/4" BOLTS OR WELD DEVELOPING LESS THAN 10 KIPS.
38. ALL CONNECTIONS NOT DETAILED ON THE DRAWINGS SHALL BE SHEAR CONNECTIONS WITH HIGH STRENGTH BOLTS (FRICTION-TYPE).
39. CUTS, HOLES, OPENINGS, ETC., REQUIRED IN STRUCTURAL STEEL MEMBERS FOR THE WORK OF OTHER TRADES SHALL BE SHOWN ON SHOP DRAWINGS FOR STRUCTURAL STEEL AND SHALL BE MADE IN THE SHOP. BURNING OF HOLES, OR CUTS IN STRUCTURAL STEEL MEMBERS IN THE FIELD, WILL NOT BE PERMITTED EXCEPT BY WRITTEN PERMISSION FROM THE ENGINEER.
40. SIZES OF STRUCTURAL STEEL CANNOT BE VARIED FROM THOSE SHOWN ON THE DRAWINGS WITHOUT WRITTEN CONSENT OF THE ENGINEER.
41. TESTING OF WELDS SHALL BE AS FOLLOWS:
   1. VISUAL INSPECTION SHALL BE MADE ON 100% OF ALL WELDS
   2. MAGNETIC-PARTICLE TEST SHALL BE MADE ON 25% OF ALL FILLET WELDS.
   3. ULTRASONIC TESTS SHALL BE MADE ON 100% OF ALL FULL PENETRATION WELDS.
42. STRUCTURAL STEEL FABRICATOR SHALL SUBMIT THREE SETS OF SHOP DRAWING PLANS FOR REVIEW.
43. INTERIOR FRAMES MAY REQUIRE TEMPORARY BRACING DURING CONSTRUCTION.
44. ALL WELDING ELECTRODES SHALL BE E70XX, UNLESS NOTED OTHERWISE.
45. CHECK PROPER USAGE OF DIRECT TENSION INDICATORS AT SLIP CRITICAL BOLTS WITH THE SPECIFICATIONS.
46. THE INDEPENDENT TESTING AGENCY SHALL PERFORM ALL SHOP AND FIELD INSPECTION AND TESTING. THE STRUCTURAL STEEL FABRICATOR AND ERECTOR SHALL SCHEDULE WORK TO ALLOW THE ABOVE TESTING REQUIREMENTS TO BE COMPLETED.
47. THE CONSTRUCTION MANAGER SHALL BE RESPONSIBLE FOR THE CONTROL OF ALL ERECTION PROCEDURES AND SEQUENCES WITH RELATION TO TEMPERATURE DIFFERENTIAL AND TEMPORARY STRUCTURAL STABILITY.
48. STEEL SHALL BE CLEANED OF RUST, LOOSE MILL SCALE AND OTHER FOREIGN MATERIALS FOR PROPER FABRICATION, FITTING UP, OR WELDING.
49. PRIME PAINT ALL STRUCTURAL STEEL EXCEPT THAT WHICH RECEIVES SPRAY-ON FIREPROOFING OR IS ENCASED IN CONCRETE. DO NOT PRIME PAINT STRUCTURAL STEEL AT CONNECTIONS.
50. ALL SHEAR CONNECTIONS SHALL BE DESIGNED TO SUSTAIN A LOAD AT LEAST EQUAL TO 1/2 THE TOTAL UNIFORM CAPACITY OF THE BEAM FOR NON-COMPOSITE BEAMS AND 3/4 THE TOTAL UNIFORM CAPACITY OF THE BEAM FOR COMPOSITE BEAMS.
51. FOR STEEL LINTELS, REFER TO ARCH. DRAWINGS.

WOOD ROOF TRUSSES, FRAMING AND DECK

52. FOR WOOD ROOF TRUSSES, FRAMING AND DECK, THE LATEST EDITION OF THE AFPA "NATIONAL DESIGN SPECIFICATION FOR WOOD CONSTRUCTION" WILL APPLY. WOOD FRAMING SHALL BE DOUGLAS FIR - LARCH, SELECT STRUCTURAL GRADE.
53. THE WOOD ROOF TRUSSES, FRAMING AND DECK SHALL BE DESIGNED TO CARRY LATERAL SHEAR FORCES AS A DIAPHRAGM IN CONFORMANCE WITH THE APPLICABLE PROVISIONS IN THE INTERNATIONAL BUILDING CODE (IBC) 2003.
54. DESIGN CALCULATIONS AND SHOP DRAWINGS NECESSARY FOR THE FABRICATION, ERECTION, AND TO CARRY THE VERTICAL AND LATERAL DESIGN LOADS IN PLACE SHALL BE SUBMITTED FOR REVIEW TO THE SUPERVISING PROFESSIONAL. TRUSS GIRDERS RUNNING ALONG NORTH AND SOUTH WALLS CARRYING "CANTILEVER EFFECTS" OF NORTH AND SOUTH ROOF OVERHANGS SHALL BE DESIGNED FOR THIS EXTRA LOAD. FABRICATION SHALL NOT BEGIN BEFORE RECEIVING APPROVAL FROM THE SUPERVISING PROFESSIONAL.
55. JOIST CAMBER SHALL NOT EXCEED THE DEAD LOAD DEFLECTION. ALL CORRECTIVE WORK REQUIRED DUE TO EXCESSIVE CAMBER SHALL BE DONE BY THE CONTRACTOR AT HIS OWN EXPENSE.
56. PROVIDE SLOPED END BEARINGS FOR SLOPED TRUSSES.
57. TRUSSES SHALL BE POSITIVELY CONNECTED TO STEEL BEAMS AT THEIR BEARINGS.
58. WOOD ROOF DIAPHRAGM SHALL BE POSITIVELY CONNECTED TO STRUCTURAL SYSTEM TO TRANSFER 500 PLF LATERAL SHEAR FORCE ABOVE ALL WALL FOOTINGS IN ACCORDANCE IBC 2003 AND ACI 530. WOOR ROOF DIAPHRAGM SHALL BE DESIGNDED FOR DRAG FORCES USING DRAG STRUTS AT RE-ENTRANT CORNERS (SEE FIG. 1)
59. THE CONTRACTOR IS RESPONSIBLE FOR ALL TEMPORARY BRACING REQUIRED TO ERECT THE TRUSSES DURING CONSTRUCTION.

MISCELLANEOUS

60. THE CONTRACTOR SHALL INFORM THE ENGINEER IN WRITING OF ANY DEVIATION FROM THE CONTRACT DOCUMENTS. THE CONTRACTOR SHALL NOT BE RELIEVED OF THE RESPONSIBILITY FOR SUCH DEVIATION BY THE ENGINEER'S APPROVAL OF SHOP DRAWINGS, PRODUCT DATA, ETC., UNLESS THE CONTRACTOR HAS SPECIFICALLY INFORMED THE ENGINEER OF SUCH DEVIATION AT THE TIME OF SUBMISSION, AND THE ENGINEER HAS GIVEN WRITTEN APPROVAL TO THE SPECIFIC DEVIATION.
61. ALL ITEMS WHICH, IN THE OPINION OF THE CONTRACTOR, APPEAR TO BE DEFICIENCIES, OMISSIONS, CONTRADICTIONS OR AMBIGUITIES, IN THE PLANS AND SPECIFICATIONS SHALL BE BROUGHT TO THE ATTENTION OF THE ENGINEER. PLANS AND/OR SPECIFICATIONS WILL BE CORRECTED, OR WRITTEN INTERPRETATION OF THE ALLEGED DEFICIENCY, OMISSION, CONTRADICTION OR AMBIGUITY WILL BE MADE BY THE ENGINEER BEFORE THE AFFECTED WORK PROCEEDS.

DESIGN AND LOADING

62. ALLOWABLE UNIT STRESSES ARE IN ACCORDANCE WITH THE LATEST SPECIFICATIONS OF THE INTERNATIONAL BUILDING CODE (IBC) 2003

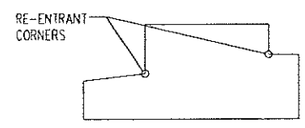

FIG. 1

63. DESIGN LOADS:

1. DEAD LOADS IN POUNDS PER SQUARE FOOT:	ACTUAL WEIGHTS
2. LIVE LOADS IN POUNDS PER SQUARE FOOT AS FOLLOWS:	
A. FLOOR:	50 PSF
B. HALLWAYS:	100 PSF
C. MECHANICAL:	ACTUAL WEIGHTS
3. SNOW LOAD DATA:	30 PSF
A. GROUND SNOW LOAD, P_g:	21 PSF + DRIFT
B. FLAT ROOF SNOW LOAD, P_f:	18 PSF + DRIFT
C. SLOPED ROOF SNOW LOAD, P_s:	1.0
D. SNOW EXPOSURE FACTOR, C_e:	1.0
E. SNOW LOAD IMPORTANCE FACTOR, I_s:	0.86
F. THERMAL FACTOR, C_t:	
G. ROOF SLOPE FACTOR, C_s:	
4. WIND LOAD DATA	90 MPH
A. BASIC WIND SPEED (3 SEC):	1.0
B. WIND LOAD IMPORTANCE FACTOR, I_w:	C
C. WIND EXPOSURE CATEGORY:	22 PSF
D. MAX. WIND DESIGN PRESSURE (MWFRS), P_w:	30 PSF
E. MAX. WIND DESIGN PRESSURE (C&C), P_{wi}:	
5. EARTHQUAKE DESIGN DATA:	
A. SPECTRAL RESPONSE ACC. @ SHORT PERIOD, S_S:	0.125g
B. SPECTRAL RESPONSE ACC. @ 1 SEC PERIOD, S_1:	0.05g
C. SEISMIC USE GROUP:	B
D. SEISMIC DESIGN CATEGORY:	D
E. SITE CLASS:	BEARING WALL SYSTEM
F. BASIC STRUCTURAL SYSTEM:	ORDINARY REINFORCED MASONRY SHEAR WALLS
G. SEISMIC RESISTING SYSTEM:	SIMPLIFIED ANALYSIS FORCE PROCEDURE
H. ANALYSIS PROCEDURE:	S_K
I. DESIGN BASE SHEAR (FULL BLDG.):	50 PLF MIN.
J. WALL-ROOF CONNECTIONS	

STANDARD ABBREVIATIONS

BM	-	BEAM
B/	-	BOTTOM OF
B.T. PIT	-	BRAKE TEST PIT
CMU	-	CONCRETE MASONRY UNIT
CTRS	-	CENTERS
COL.	-	COLUMN
C&C	-	COMPONENTS & CLADDING
DIM.	-	DIMENSION
DN	-	DOWN
E.W.	-	EACH WAY
EL.	-	ELEVATION
(E)	-	EPOXY
FTG.	-	FOOTING
MWFRS	-	MAIN WINDFORCE RESISTANT SYSTEM
MFG.	-	MANUFACTURING
O.C.	-	ON CENTER
OHD	-	OVERHEAD DOOR
PED.	-	PEDESTAL
RAD.	-	RADIUS
REINF.	-	REINFORCEMENT
SC	-	SLIP CRITICAL
S.O.G	-	SLAB ON GRADE
SPC	-	SPACES
SQ.	-	SQUARE
T&B	-	TOP AND BOTTOM
T/	-	TOP OF
TYP.	-	TYPICAL
U.N.O.	-	UNLESS NOTED OTHERWISE
W.W.F.	-	WELDED WIRE FABRIC

NO.	DATE	REVISION	BY

STATE OF WISCONSIN
DEPARTMENT OF TRANSPORTATION
STRUCTURES DESIGN SECTION

MADISON S&W FACILITY, NO. 16

CONST. SPEC.	IBC 2003	DRAWN BY	SWS	PLANS CK'D.	JWC

GENERAL NOTES

SHEET S601

GENERAL NOTES

1. PLUMBING CONTRACTOR SHALL COORDINATE HIS WORK WITH EXISTING CONDITIONS AND WITH THE WORK OF OTHER TRADES.

2. THESE DRAWINGS ARE A DIAGRAMMATIC REPRESENTATION OF WORK TO BE ACCOMPLISHED AND AS SUCH DO NOT SHOW ALL REQUIRED OFFSETS OF PIPING. MECHANICAL CONTRACTOR SHALL INSTALL MATERIAL AND EQUIPMENT AS TO CONFORM TO THE STRUCTURE, EQUIPMENT CONNECTIONS AND MAINTAIN HEADROOM AND PASSAGEWAY.

LEGEND

— — —	NEW DOMESTIC COLD WATER (CW)
— — — —	NEW DOMESTIC HOT WATER (HW)
—SS—	NEW SANITARY SEWER
— — — —	NEW VENT
—ST—	NEW STORM DRAIN
	PIPE ELBOW/TEE DOWN
	PIPE ELBOW/TEE UP
	CAPPED PIPE END
	BALL VALVE
	GATE VALVE
1	KEY NOTE
FCO	FLOOR CLEANOUT
CO	CLEANOUT
WCO	WALL CLEANOUT
SP-*	SUMP PUMP
ET-*	EXPANSION TANK
WH-*	WATER HEATER
WC-*	WATER CLOSET
UR-*	URINAL
L-*	LAVATORY
S-*	SINK
FD-*	FLOOR DRAIN
HB-*	HOSE BIBB
EWC-*	ELECTRIC WATER COOLER
MB-*	MOP BASIN

WATER CALCULATION WORKSHEET

Information Needed for Water Service Sizing

1 65 Demand of addition in gallons per minute.

2 45 Law pressure at main before pressure tank or woter meter.

3 0 Difference in elevation from main to meter (or external pressure tank to building control valve). Not applicable

4 0 Size of water meter (if applicable). Not opplicable

5 0 Developed length from main to meter (or external pressure tank to building control valve). Not applicable

First Find Available Pressure After the Water Meter
(or at building control valve)

6 3.5 Find pressure loss due to friction in 2 inch diameter water service.

7 0.0 Find pressure loss due to elevation, moin to meter (or external pressure tank to building control valve). Multiply the difference in elevation by .434 psi/ft.

8 0 Find pressure loss due to meter. (from manufacturer ar AWWA)

9 41.5 Subtract the loss due to friction (Step 6), loss due to elevation (Step 7), and loss due to meter (Step 8) from the low moin pressure (or low pressure at external pressure tank) (Step 2). This calculation is the availoble pressure after the water meter (or at the building control valve). This answer is entered in Line B, below.

Information Needed for Water Distribution Sizing
Using the following formula, find the pressure available for uniform loss (psi/100' of pipe)

$$A = [B - (C + D + E)] / F \times 100$$

A 5.8 Pressure available for uniform loss (psi/100' of pipe).

B 41.5 Available pressure after water meter (at the building control valve or low pressure ot internal pressure tank). (See step 9 above)

C 35 Pressure needed at controlling fixture. (Flush valve woter closet)

D 2.2 Difference in elevation between woter meter (building control valve or internal pressure tank) and controlling fixture in feet 5 x .434 psi/ft.

E 0 Pressure loss due to water softeners, water treatment devices, instantaneous water heaters and backflow preventers which serve the controlling fixture. Conventional water heaters usually do not hove a pressure loss.

F 75 Developed length from water meter (building control valve or internal pressure tank) to controlling fixture in feet 50 x 1.5 (Worse case scenario)

PLUMBING FIXTURE SCHEDULE

MARK	MANUFACTURER	MODEL	DESCRIPTION	WSFU HW	WSFU CW	WSFU TOTAL	DFU VALUE
EWC-1	ELKAY	ERFP28FRAC & LK1110 (JUG FILLER)	DUAL LEVEL, WALL MOUNTED BARRIER FREE ELECTRIC WATER COOLER WITH STAINLESS STEEL BASIN, RECESSED IN-THE-WALL REFRIGERATION SYSTEM AND STAINLESS STEEL GRILL. INCLUDES VANDAL-RESISTANT FRONT PUSH BUTTON, FLEXI-GUARD SAFETY BUBBLER, WALL HANGER, JUG FILLER AND 1-1/4" TAILPIECE. RATED FOR 7.5 GPH AT 90 DEG. AMBIENT AND 50 DEG. LEAVING WATER, 4.5 FLA, 115V/1ø. TRAP: 1-1/4" x 1-1/2" PLASTIC TRAP WITH C.O. PLUG STOP/SUPPLY: NIBCO S-585-70-SU, 1/2" BALL VALVE ••• 36" MAXIMUM SPOUT OUTLET HEIGHT FOR ADA DESIGNATED UNITS •••	0.5	0.5	1.0	1.0
ES-1	GUARDIAN	GBF1909-TMV	COMBINATION EMERGENCY EYE/FACE WASH AND DRENCH SHOWER WITH PLASTIC SHOWER HEAD AND STAINLESS STEEL BOWL. SCHEDULE 40 GALVANIZED STEEL EYEWASH FITTINGS WITH ORANGE POLYETHYLENE COVERS, 1" STAY-OPEN SHOWER VALVE WITH TRIANGULAR PULL HANDLE, 3/4" STAY-OPEN EYEWASH BALL VALVE WITH PUSH FLAG OPERATOR, 1-1/4" GALVANIZED STEEL PIPE STAND WITH FLOOR FLANGE.	--	--	--	--
FD-1	JAY R. SMITH	2005Y03(-A06NB-U)	3" FLOOR DRAIN, DUCO CAST IRON BODY WITH NO-HUB OUTLET, FLASHING COLLAR AND 6" ROUND NICKEL BRONZE ADJUSTABLE STRAINER HEAD, VANDAL PROOF SCREWS.	--	--	--	3.0
HB-1	WOODFORD	865	AUTOMATIC DRAINING, FREEZELESS WALL HYDRANT WITH VACUUM BREAKER-BACKFLOW PREVENTOR, 3/4" MALE HOSE THREAD NOZZLE, BRASS VALVE BODY, ONE PIECE VALVE PLUNGER TO CONTROL BOTH FLOW & DRAINAGE, HARDENED STAINLESS STEEL OPERATING STEM, LOOSE TEE KEY, WALL CLAMP. PROVIDE CHROME FINISH.	--	4.0	4.0	--
L-1	KOHLER	K-2005-R KINGSTON	WALL MOUNT VITREOUS CHINA LAVATORY DRILLED FOR CONCEALED ARM CARRIER. FAUCET OPENINGS 4" ON CENTER. PROVIDE ADDITIONAL HOLE FOR SOAP DISPENSER. FAUCET: SLOAN ETF-80, ADA COMPLIANT, SENSOR OPERATED ELECTRONIC FAUCET, 120 VAC/24 VAC TRANSFORMER (PLUG-IN OR BOX MOUNT). PROVIDE TRIM PLATE FOR 4" CENTER-SET SINK. DRAIN: K-13885 1-1/4" OFFSET DRAIN AND KOHLER K-8999 1-1/4" x 1-1/2" CAST BRASS ADJUSTABLE 'P' TRAP WITH C.O. PLUG SUPPLIES & STOPS: CHICAGO FAUCET 1006 ANGLE VALVE WITH LOOSE KEY HANDLE, 1/2" FEMALE INLET, 1/2"OD x 12" RISER LAVATORY SUPPORT: SMITH COMMERCIAL GRADE PROVIDE HANDI-SHIELD PIPE INSULATION FOR DRAIN AND SUPPLIES PROVIDE WHITE FINISH. SOAP DISPENSER PROVIDED BY OTHERS.	0.5	0.5	1.0	1.0
L-2	ELKAY	ELV2219SACC WITH LK721AC PROVIDE EXTRA HOLE FOR A SOAP DISPENSER	#18 GAUGE, TYPE 304 STAINLESS STEEL WALL MOUNTED LAVATORY. FURNISHED WITH INTEGRAL STAINLESS STEEL SUPPORT BRACKETS AND SEPARATE WALL HANGER. FAUCET: LK721AC, SENSOR OPERATED, NON-MIXING DECK-MOUNTED GOOSENECK FAUCET WITH ADJUSTABLE SENSOR EYES. INCLUDES VANDAL-RESISTANT, WATER-RESISTANT SENSOR CONTROL MODULE WITH ARMORED VANDAL-RESISTANT CONTROL AND POWER CABLES, 12V DC PLUG-IN VOLTAGE ADAPTER, SLOW-CLOSING PISTON OPERATED SOLENOID VALVE, IN-LINE FILTER WITH CLEANOUT TRAP AND STAINLESS STEEL BRAIDED 12" SUPPLY LINE. PROVIDE EXTRA HOLE FOR SOAP DISPENSER DRAIN: K-13885 1-1/4" OFFSET DRAIN AND KOHLER K-8999 1-1/4" x 1-1/2" CAST BRASS ADJUSTABLE 'P' TRAP WITH C.O. PLUG SUPPLIES & STOPS: CHICAGO FAUCET 1006 ANGLE VALVE WITH LOOSE KEY HANDLE, 1/2" FEMALE INLET, 1/2"OD x 12" RISER. SOAP DISPENSER PROVIDED BY OTHERS.	0.5	0.5	1.0	1.0
MB-1	FIAT	TSB-3000	24"x24"x12" PRECAST TERRAZZO MOP BASIN WITH 6" DROP FRONT, STAINLESS STEEL CAPS ON ALL CURBS; STAINLESS STEEL CAST-IN DRAIN BODY FOR 3" PIPE. FAUCET: CHICAGO FAUCET 897 WITH VACUUM BREAKER SPOUT, 3/4" HOSE THREAD, WALL BRACE & PAIL HOOK. INCLUDE WATTS 88 VACUUM BREAKER ON FAUCET.	2.0	2.0	3.0	3.0
S-1	ELKAY	LR-2522 LUSTERTONE	25" x 22" SELF-RIMMING COUNTER MOUNTED 18 GA TYPE 302 STAINLESS STEEL SINGLE COMPARTMENT SINK WITH 3 FAUCET OPENINGS 4" ON CENTER AND 3-1/2" DRAIN OPENING. BOWL SHALL MEASURE 21" x 15-3/4" x 8" DEEP. FAUCET: CHICAGO FAUCET 786-E3 GOOSENECK SPOUT WITH 4" BLADE HANDLES DRAIN: ELKAY LK-372 TRAP: 1-1/2"x 1-1/2" 17 GA. CAST BRASS TRAP WITH C.O. PLUG. STOPS: NIBCO S-585 1/2" BALL VALVE	1.0	1.0	1.5	2.0
UR-1	KOHLER	K-4960-ET BARDON	WALL MOUNT VITREOUS CHINA WASHOUT URINAL WITH 3/4" TOP SPUD INLET, 2" OUTLET AND REMOVABLE STRAINER. 0.5 GALLON FLUSH. FLUSH VALVE: SLOAN ROYAL OPTIMA 186-0.5 ES-S, SENSOR OPERATED, EXPOSED, CHROME PLATED FLUSHOMETER AND 0.5 GALLONS PER FLUSH. CARRIER: J.R. SMITH MODEL 0636 PROVIDE WHITE FINISH •••17" RIM HEIGHT FOR ADA DESIGNATED URINALS•••	--	2.0	2.0	2.0
WC-1	KOHLER	K-4330 KINGSTON	WALL HUNG BACK OUTLET VITREOUS CHINA SIPHON JET WATER CLOSET WITH ELONGATED BOWL, 1-1/2" TOP SPUD, 15" RIM HEIGHT AND 1.6 GALLON FLUSH. FLUSH VALVE: SLOAN ROYAL 111 ES-S, EXPOSED, SENSOR OPERATED, CHROME PLATED FLUSHOMETER AND 1.6 GALLONS PER FLUSH. SEAT: BEMIS 1655SSC SOLID PLASTIC OPEN FRONT. CARRIER: SMITH COMMERCIAL GRADE PROVIDE WHITE FINISH ••• ADA DESIGNATED UNITS SHALL HAVE 17-1/2" RIM HEIGHT •••	--	7.0	7.0	6.0

ELECTRIC WATER HEATER

MARK	MANUF.	MODEL	GALLON CAPACITY	DATA WATT	DATA VOLT	DATA PHASE	HEIGHT	WIDTH	REMARKS
WH-1	A.O. SMITH	PXHT-52	60	4500	240	1ø	57	22-1/2	

INCLUDE TEMPERATURE CONTROL, PRESSURE RELIEF VALVE, DRAIN VALVE

PUMPS

MARK	MANUFACT	MODEL	TYPE	SERVICE	GPM	HEAD FT WC	MOTOR HP	MOTOR RPM	MOTOR VOLTS	REMARKS
SP-1	WEIL	2517	SUBMERSIBLE	WEIGH STATION	100	40	3	1750	240/1ø	1, 2

1. PROVIDE CONTROL PANEL EQUAL TO WEIL 8131. PROVIDE FLOATS EQUAL TO WEIL 8232.
2. PROVIDE STARTER/DISCONNECT.

PLANS PREPARED BY: IBC ENGINEERING SERVICES INC. WAUKESHA, WI	VAI# 001044954	PLUMBING SCHEDULES & WATER CALCULATIONS		DATE: 11/1/05	FINAL PS & E
STATE PROJECT NUMBER: 1002-02-72	HWY: I-39/90	COUNTY: DANE	MADISON SAFETY & WEIGHT FACILITY NO. 16	SCALE, FEET 0	SHEET NO: 1 OF 6	DWG. P002 52

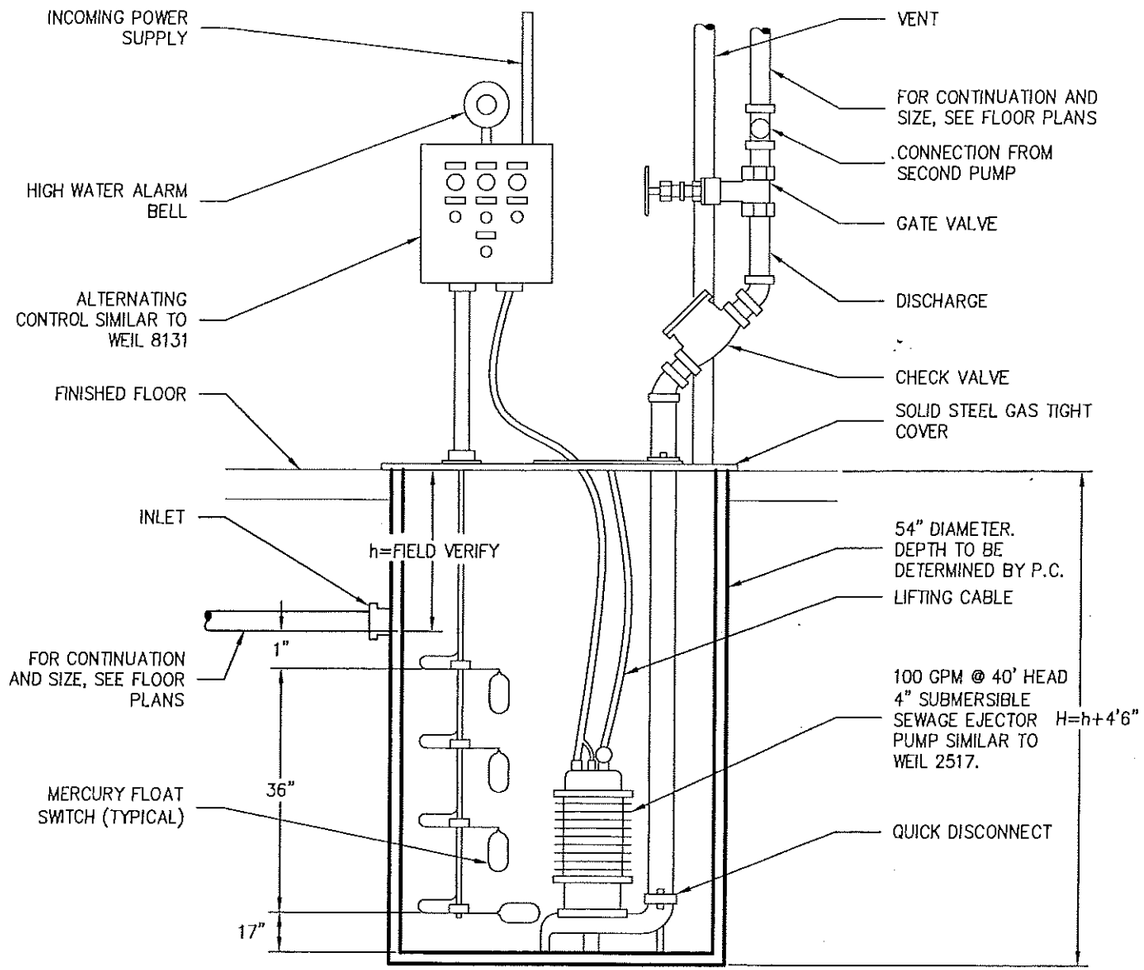

2 DUPLEX SUMP PUMP DETAIL

NTS

05036 - P102.dwg

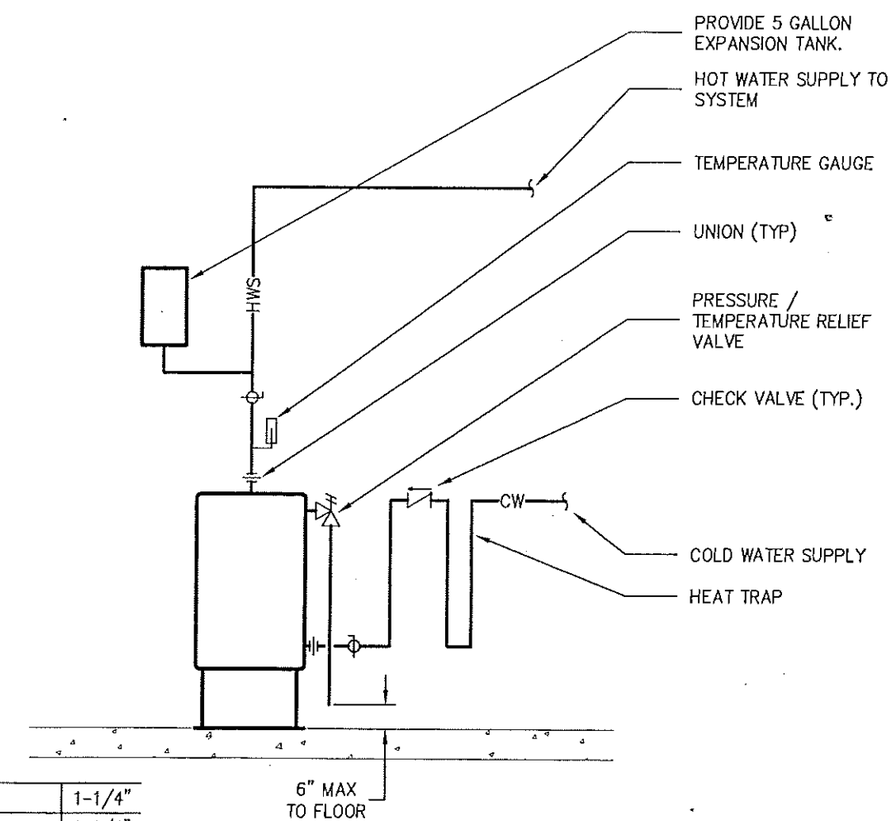

COLD WATER SUPPLY	1-1/4"
HOT WATER SUPPLY	1-1/4"

1 TANK STORAGE ELECTRIC WATER HEATER

NTS

05036 - P102.dwg

31 Oct 2005 - 9:06a G:\DATA\arch\WISDOT 001044954 Madison SWEF\1_Arch\5 Final PS&E (Construction Documents)\03 Drawings\MEP Final\05036 - P102.dwg by: sbau2

PLANS PREPARED BY: IBC ENGINEERING SERVICES INC. WAUKESHA, WI		VAI# 001044954	PLUMBING DETAILS		DATE: 11/1/05	FINAL PS & E
STATE PROJECT NUMBER: 1002-02-72	HWY: I-39/90	COUNTY: DANE	MADISON SAFETY & WEIGHT FACILITY NO. 16	SCALE, FEET 0	SHEET NO: 2 OF 6	DWG. P003 53

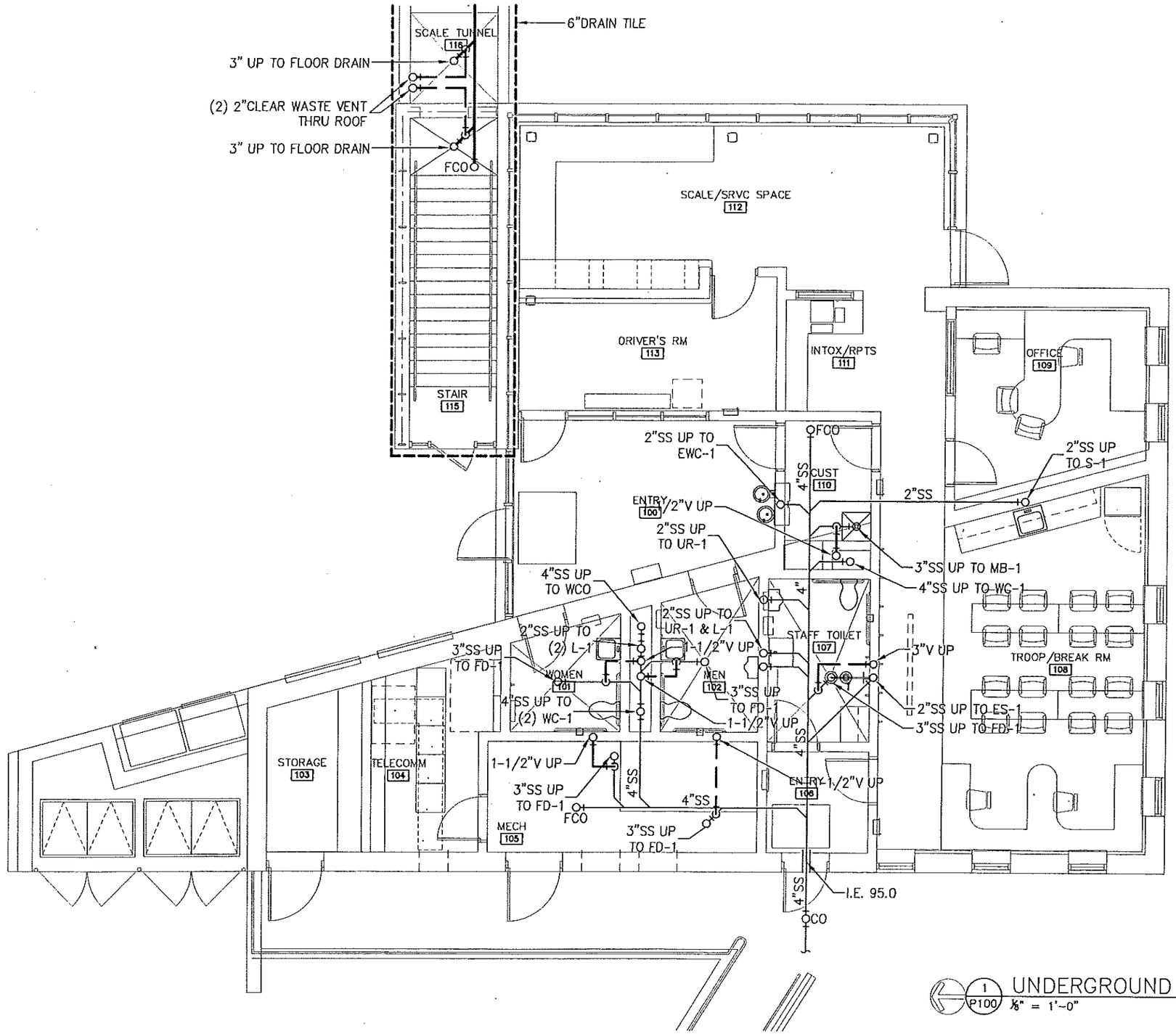

1 P100 UNDERGROUND PLUMBING PLAN

1/8" = 1'-0"

F.F. 100.0

PLANS PREPARED BY: IBC ENGINEERING SERVICES INC. WAUKESHA, WI		VAI# 001044954	UNDERGROUND PLUMBING PLAN	DATE: 11/1/05	FINAL PS & E
STATE PROJECT NUMBER: 1002-02-72	HWY: I-39/90	COUNTY: DANE	MADISON SAFETY & WEIGHT FACILITY NO. 16	SCALE, FEET 0	SHEET NO: 3 OF 6 / DWG. P100 54

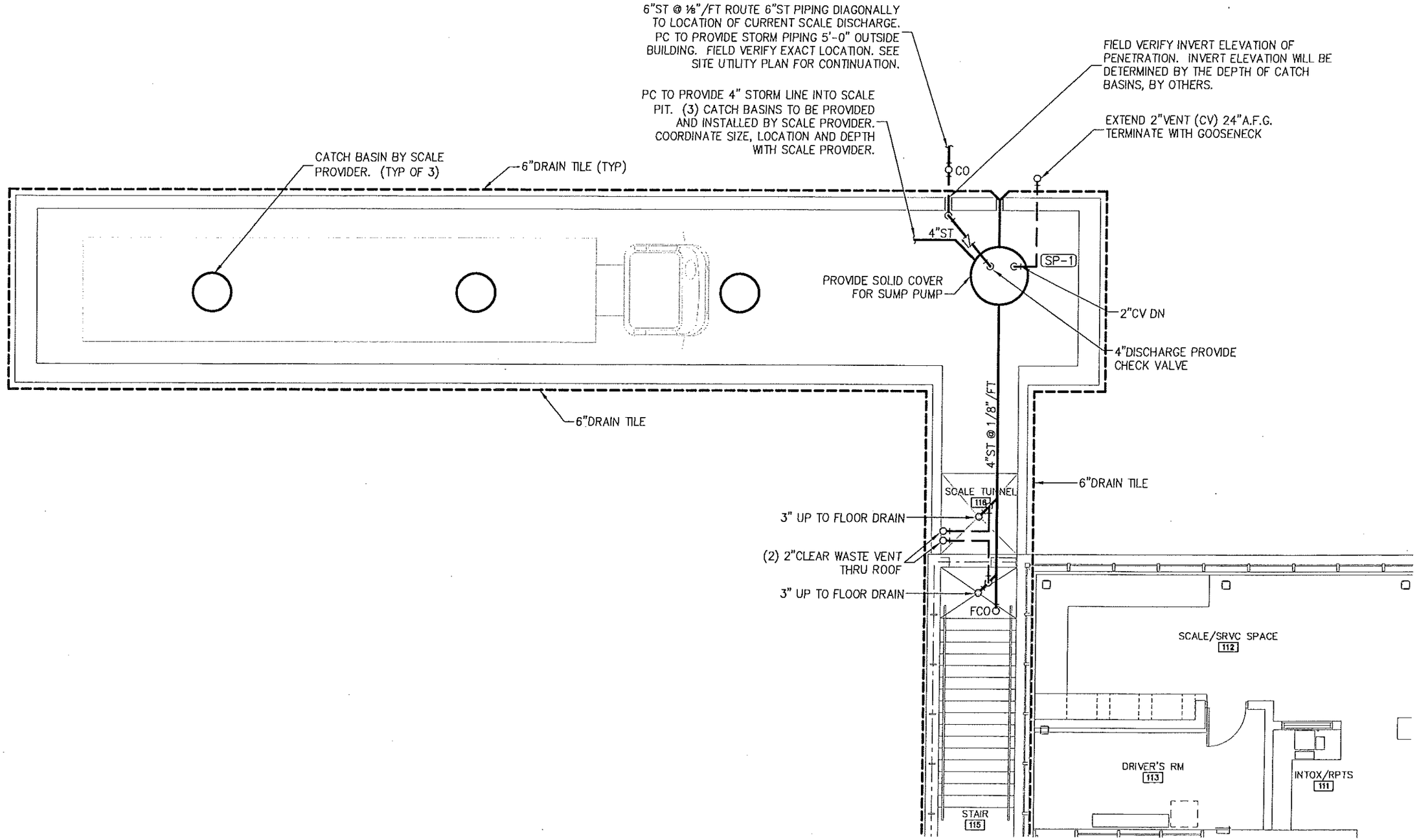

1 P101 UNDERGROUND PLUMBING PLAN
1/8" = 1'-0"
F.F. 100.0

PLANS PREPARED BY: IBC ENGINEERING SERVICES INC. WAUKESHA, WI		VAI# 001044954	UNDERGROUND PLUMBING PLAN	DATE: 11/1/05	FINAL PS & E
STATE PROJECT NUMBER: 1002-02-72	HWY: I-39/90	COUNTY: DANE	MADISON SAFETY & WEIGHT FACILITY NO. 16	SCALE, FEET 0	SHEET NO: 4 OF 6 / DWG. P101 55

31 Oct 2005 - 9:17a G:\DATA\arch\WISDOT 001044954 Madison SWEF\1_Arch\5 Final PS&E (Construction Documents)\03 Drawings\MEP Final\05036 - P100.dwg by: sbou2

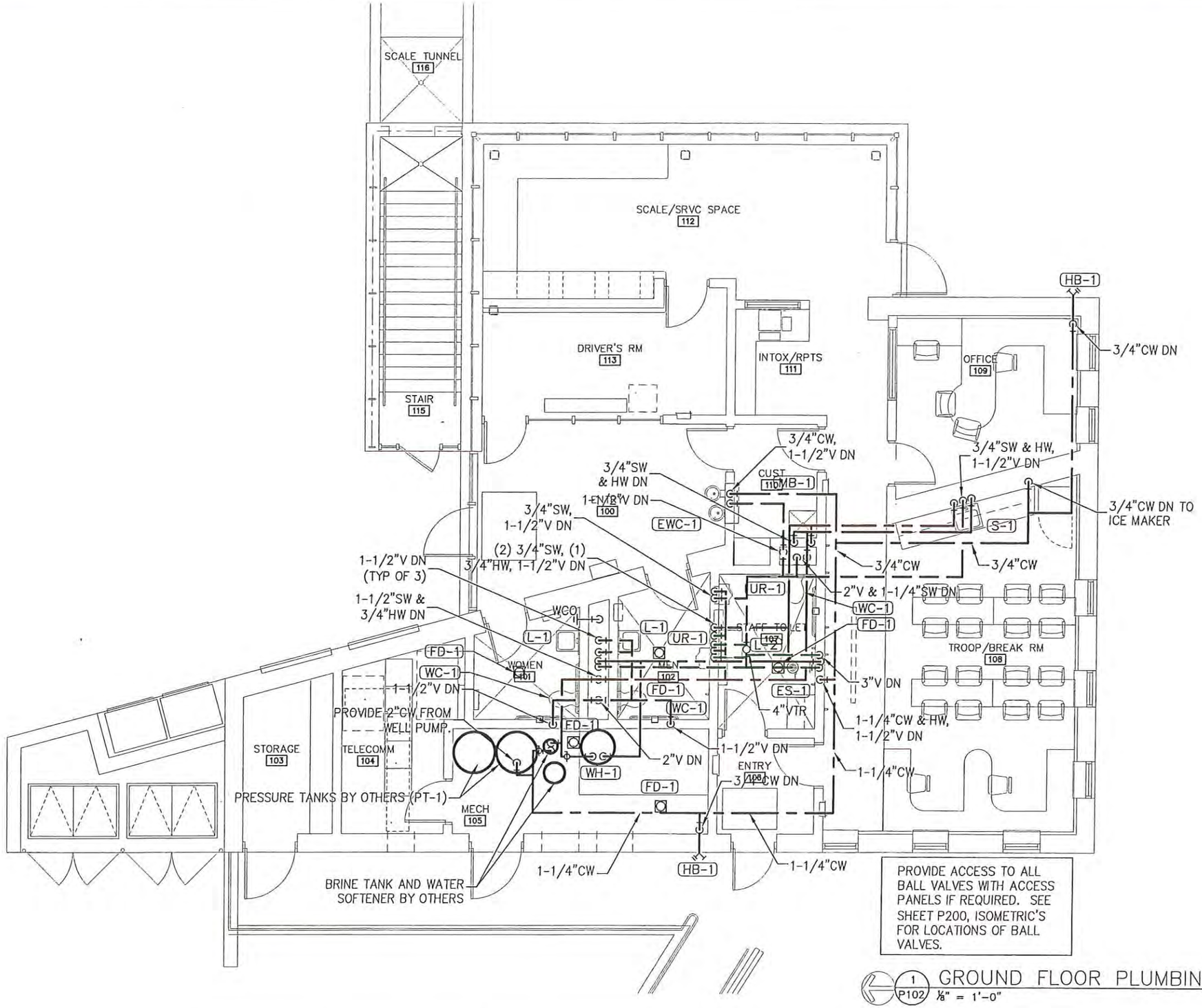

PROVIDE ACCESS TO ALL BALL VALVES WITH ACCESS PANELS IF REQUIRED. SEE SHEET P200, ISOMETRIC'S FOR LOCATIONS OF BALL VALVES.

1 / P102 GROUND FLOOR PLUMBING PLAN
⅛" = 1'-0"

PLANS PREPARED BY: IBC ENGINEERING SERVICES INC. WAUKESHA, WI	VAI# 001044954	GROUND FLOOR PLUMBING PLAN		DATE: 11/1/05	FINAL PS & E
STATE PROJECT NUMBER: 1002-02-72	HWY: I-39/90	COUNTY: DANE	MADISON SAFETY & WEIGHT FACILITY NO. 16	SCALE, FEET 0	SHEET NO: 5 OF 6 / DWG. P102 56

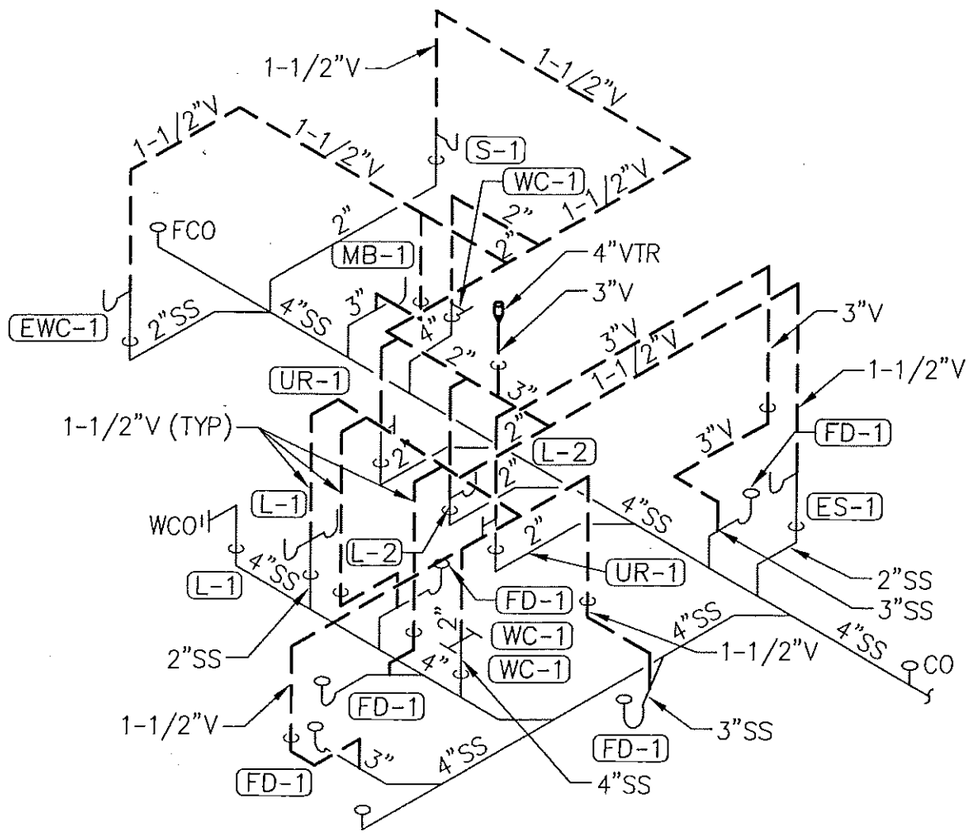

2 P200 VENT AND SANITARY ISOMETRIC
N.T.S.

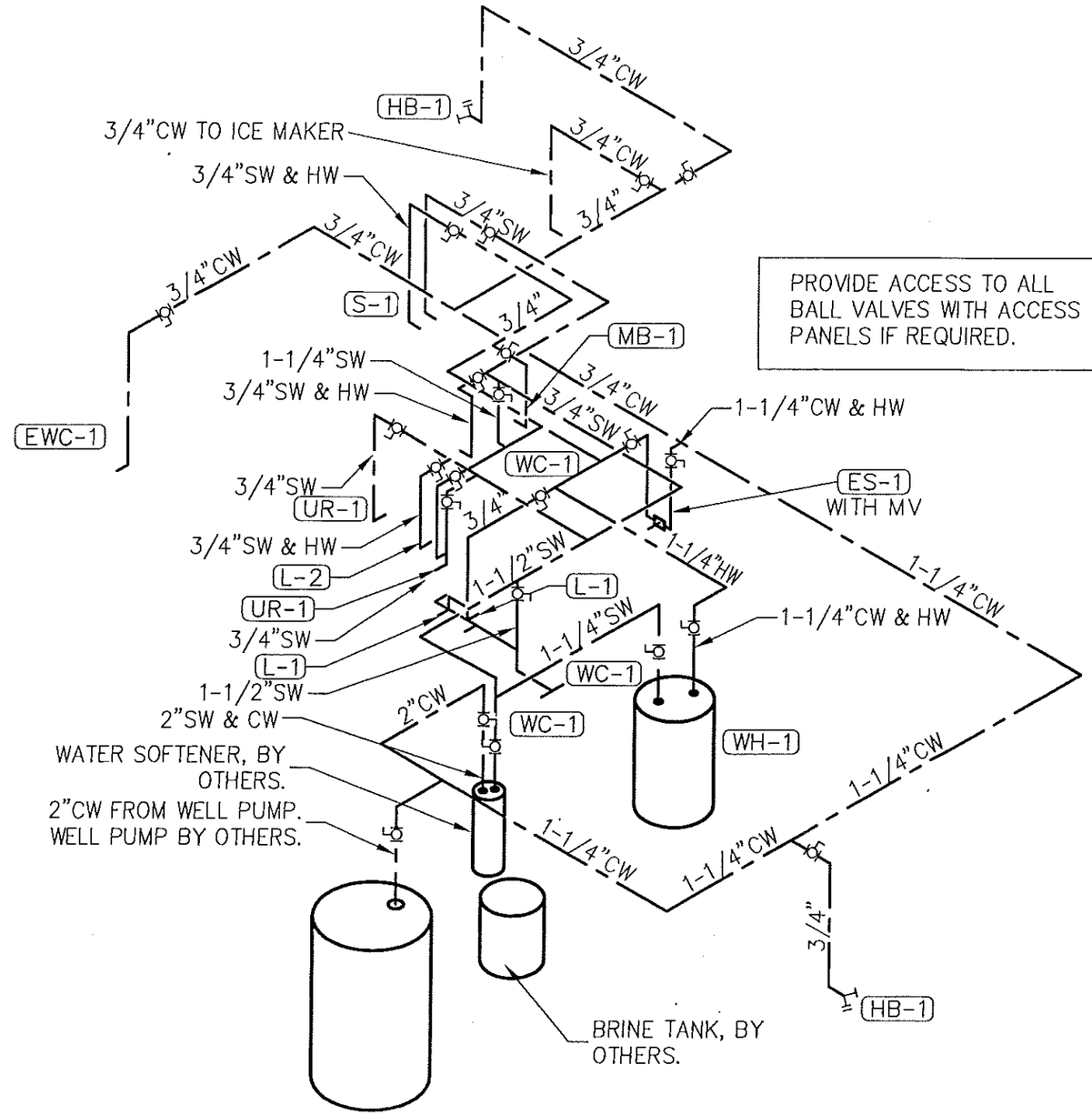

PROVIDE ACCESS TO ALL BALL VALVES WITH ACCESS PANELS IF REQUIRED.

1 P200 DOMESTIC WATER ISOMETRIC
N.T.S.

PLANS PREPARED BY: IBC ENGINEERING SERVICES INC. WAUKESHA, WI		VAI# 001044954	PLUMBING ISOMETRICS	DATE: 11/1/05	FINAL PS & E
STATE PROJECT NUMBER: 1002-02-72	HWY: I-39/90	COUNTY: DANE	MADISON SAFETY & WEIGHT FACILITY NO. 16	SCALE, FEET 0	SHEET NO: 6 OF 6 / DWG. P200

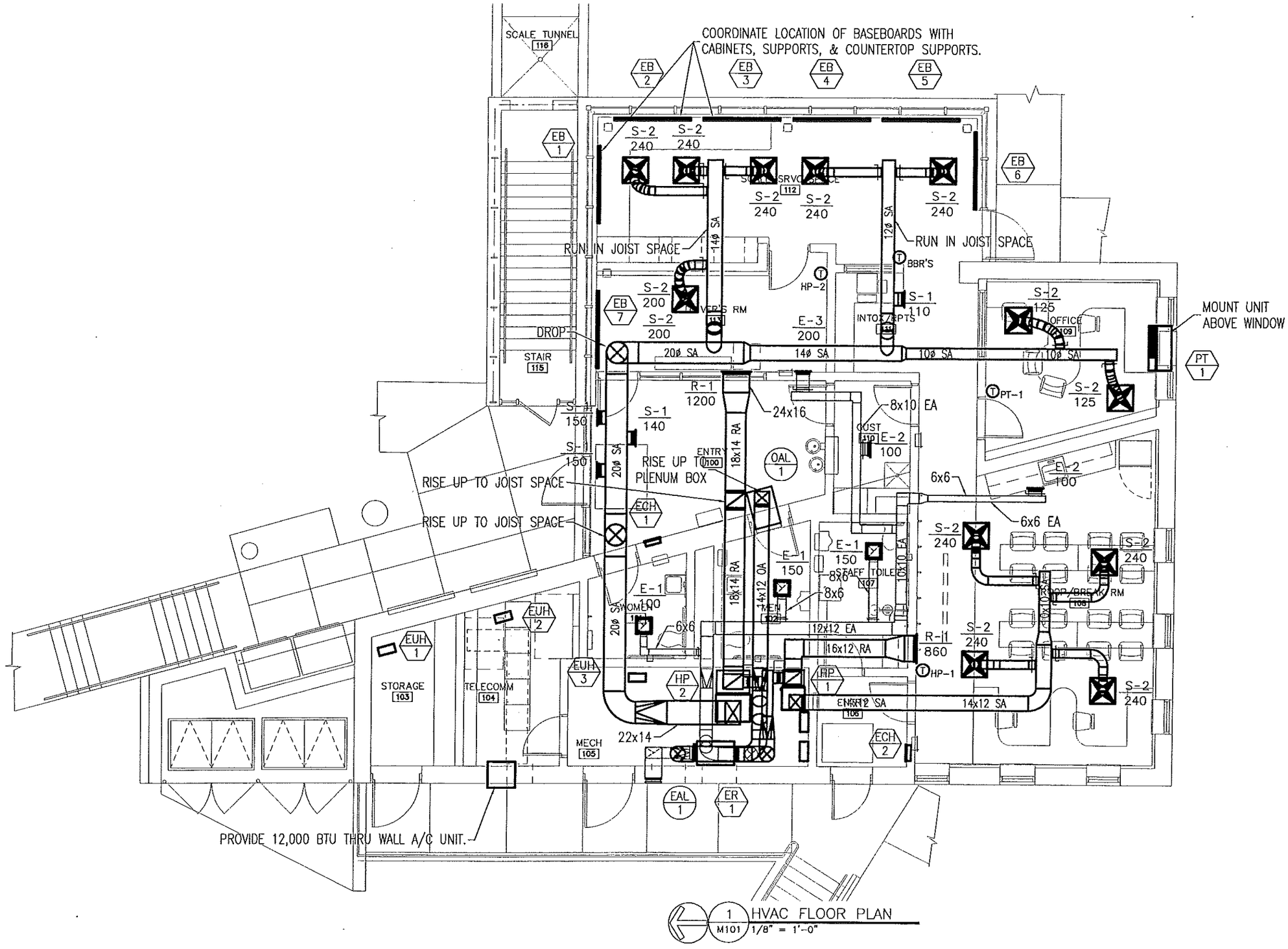

PLANS PREPARED BY: IBC ENGINEERING SERVICES INC. WAUKESHA, WI		VAI# 001044954	HVAC FLOOR PLAN	DATE: 11/1/05	FINAL PS & E
STATE PROJECT NUMBER: 1002-02-72	HWY: I-39/90	COUNTY: DANE	MADISON SAFETY & WEIGHT FACILITY NO. 16	SCALE, FEET 0	SHEET NO: OF / DWG. M101 58

31 Oct 2005 - 9:12a G:\DATA\arch\WISDOT 001044954 Madison SWEF\1_Arch\5 Final PS&E (Construction Documents)\03 Drawings\MEP Final\05036 - M101.dwg by: sbau2

GEOTHERMAL BORES

DEPTH	# OF BORES	# OF ZONES	VERTICAL TUBING	ZONE MANIFOLD	MAIN
75–99	16	2	1/2"	1 1/4"	2"
100–149	12	2	1/2"	1 1/4"	2"
150–199	8	1	3/4"	2"	2"
200–249	6	1	3/4"	2"	2"

TOTAL GPM TO BE ABOUT 22 GPM – 25 GPM

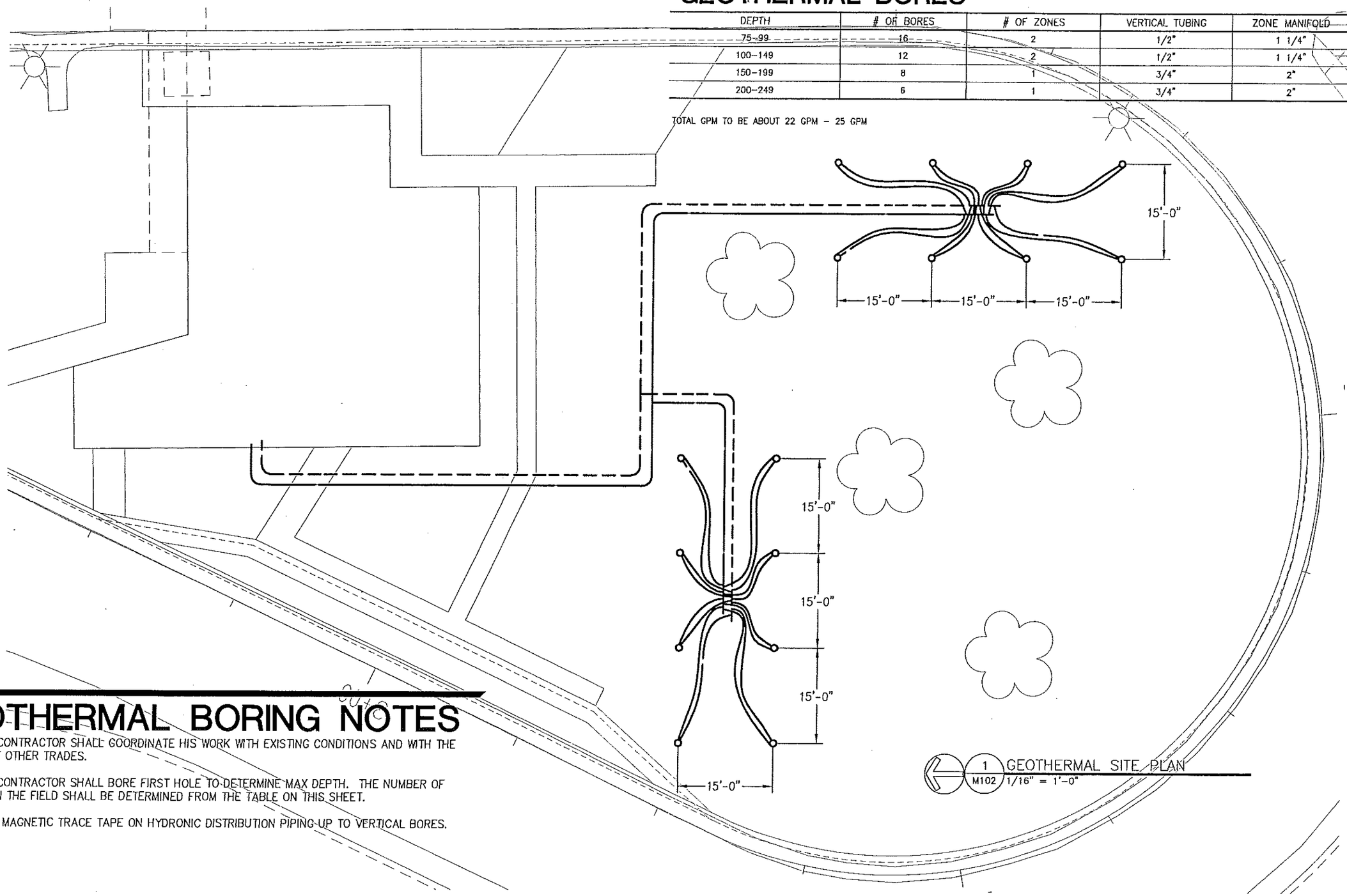

GEOTHERMAL BORING NOTES

1. BORING CONTRACTOR SHALL COORDINATE HIS WORK WITH EXISTING CONDITIONS AND WITH THE WORK OF OTHER TRADES.
2. BORING CONTRACTOR SHALL BORE FIRST HOLE TO DETERMINE MAX DEPTH. THE NUMBER OF BORES IN THE FIELD SHALL BE DETERMINED FROM THE TABLE ON THIS SHEET.
3. PROVIDE MAGNETIC TRACE TAPE ON HYDRONIC DISTRIBUTION PIPING UP TO VERTICAL BORES.

PLANS PREPARED BY: IBC ENGINEERING SERVICES INC. WAUKESHA, WI		VAI# 001044954	GEOTHERMAL SITE PLAN	DATE: 11/1/05	FINAL PS & E
STATE PROJECT NUMBER: 1002–02–72	HWY: I–39/90	COUNTY: DANE	MADISON SAFETY & WEIGHT FACILITY NO. 16 SCALE, FEET 0	SHEET NO: OF	DWG. M102 59

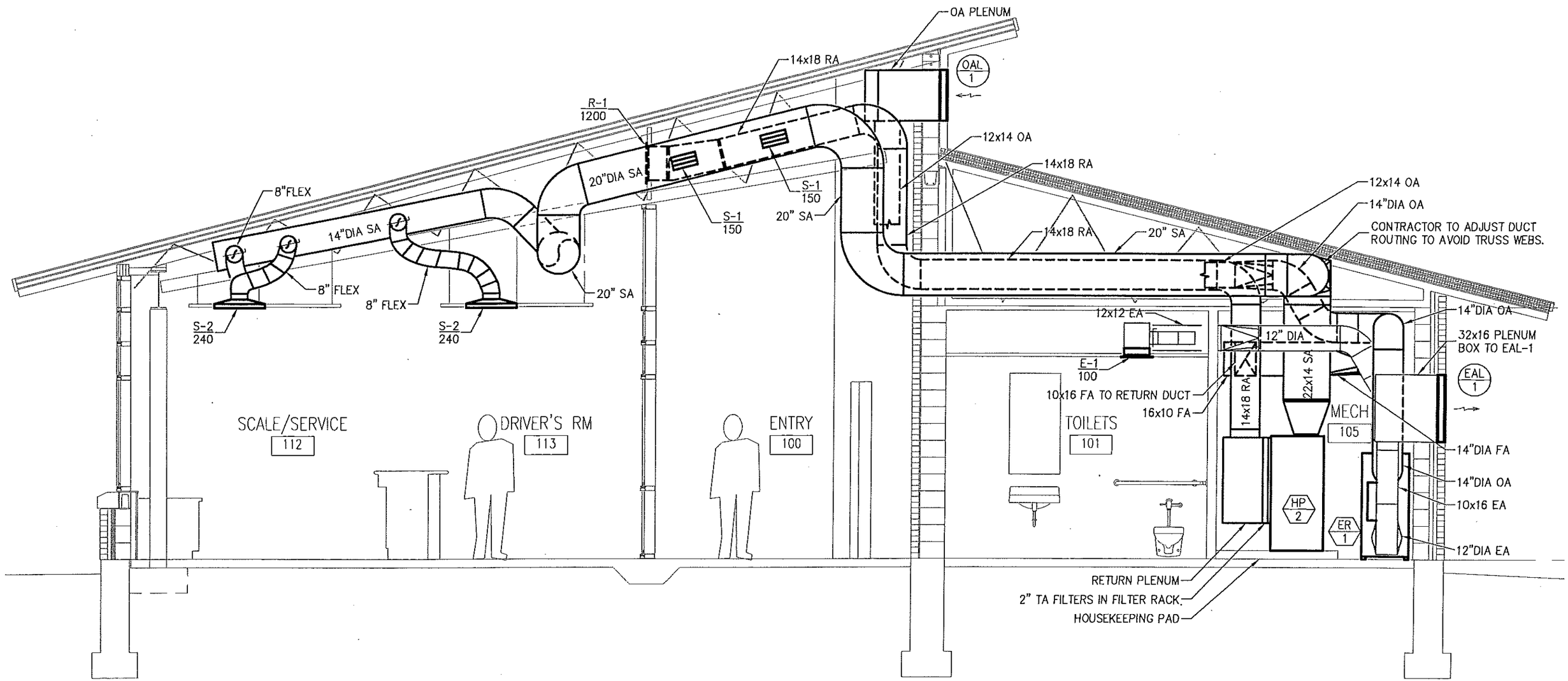

1 / M301 HVAC BUILDING SECTION
1/4" = 1'-0"

PLANS PREPARED BY: IBC ENGINEERING SERVICES INC. WAUKESHA, WI		VAI# 001044954	HVAC BUILDING SECTION	DATE: 11/1/05	FINAL PS & E
STATE PROJECT NUMBER: 1002-02-72	HWY: I-39/90	COUNTY: DANE	MADISON SAFETY & WEIGHT FACILITY NO. 16	SCALE, FEET 0	SHEET NO: OF / DWG. M301 60

31 Oct 2005 - 9:13a G:\DATA\arch\WSDOT 001044954 Madison SWEF\1_Arch\5 Final PS&E (Construction Documents)\03 Drawings\MEP Final\05036 - M301.dwg by: sbau2

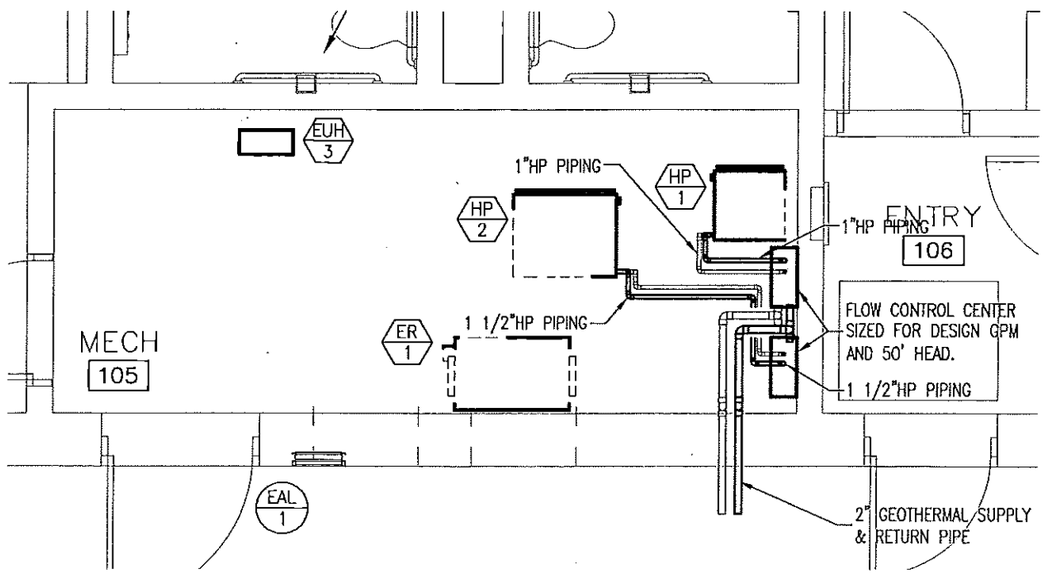

2 M401 HVAC ENLARGED MECH PIPING PLAN
1/4" = 1'-0"

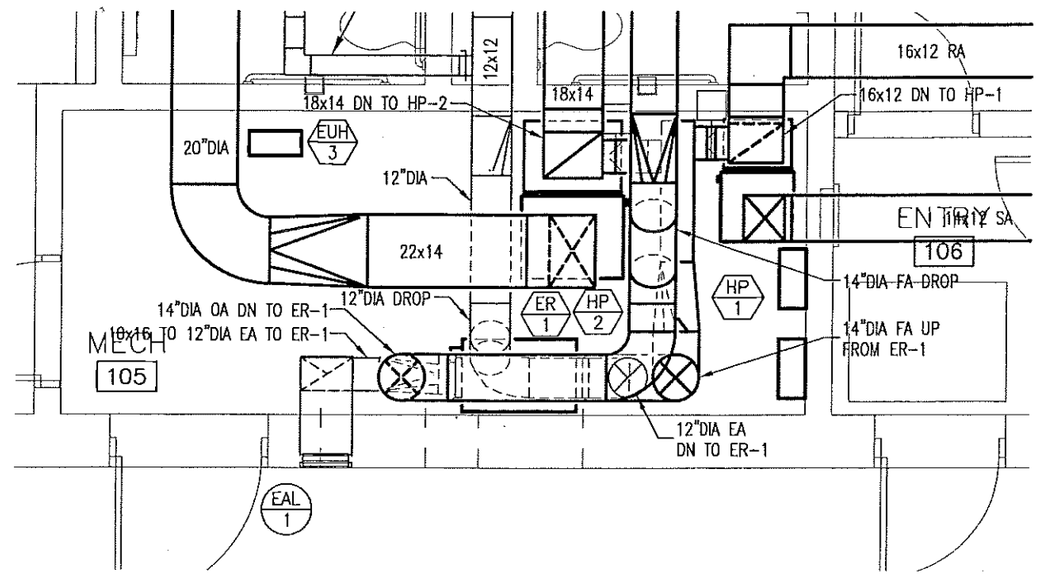

2 M401 HVAC ENLARGED MECH DUCTWORK PLAN
1/4" = 1'-0"

PLANS PREPARED BY: IBC ENGINEERING SERVICES INC. WAUKESHA, WI		VAI# 001044954	HVAC ENLARGED FLOOR PLANS	DATE: 11/1/05	FINAL PS & E
STATE PROJECT NUMBER: 1002-02-72	HWY: I-39/90	COUNTY: DANE	MADISON SAFETY & WEIGHT FACILITY NO. 16	SCALE, FEET 0	SHEET NO: OF / DWG. M401 61

OPERATION SEQUENCE

1. PROVIDE PROGRAMMABLE THERMOSTAT.

2. THERMOSTAT SHALL CYCLE HEAT PUMP IN HEATING OR COOLING MODE BASED ON ROOM SET POINT.

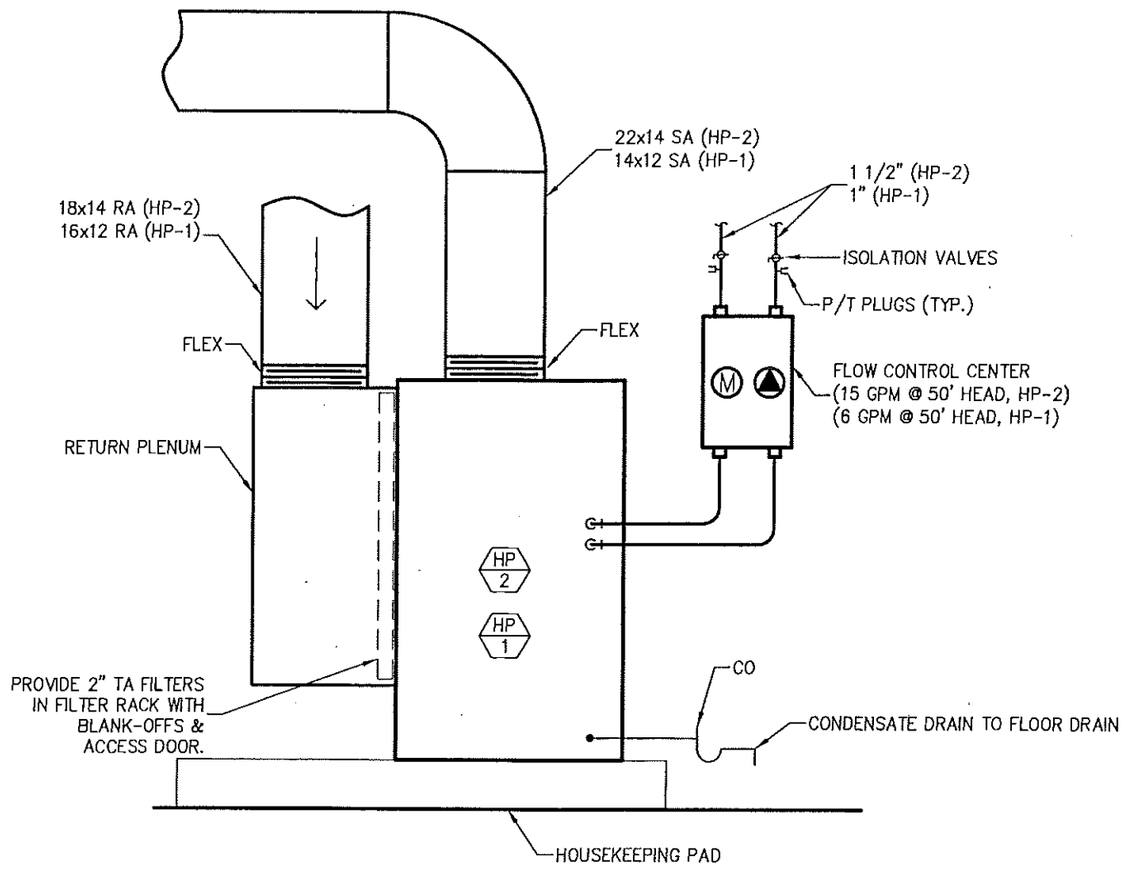

2 / M501 AIR TO WATER HEAT PUMP DETAIL
N.T.S.

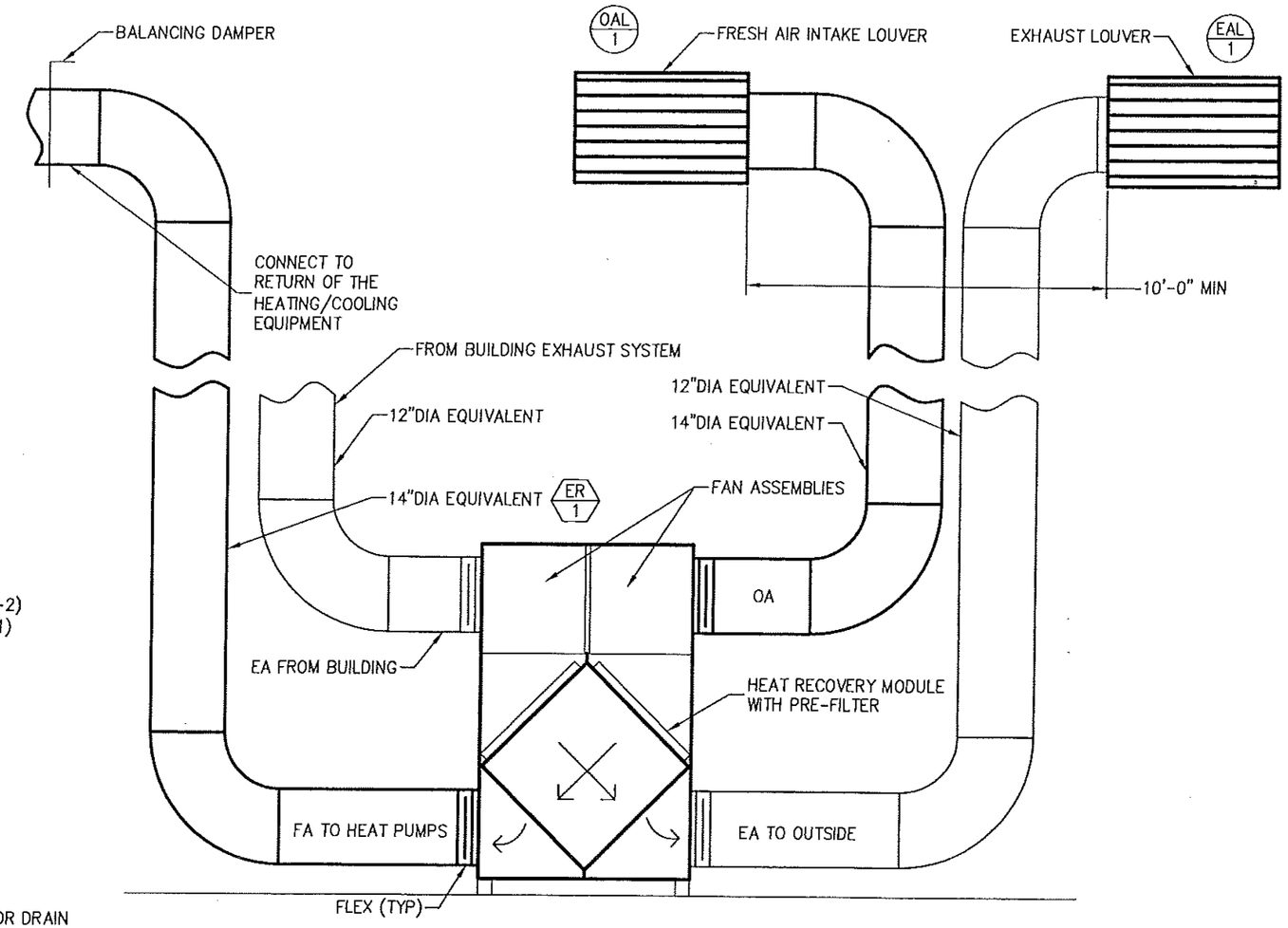

OPERATION SEQUENCE

1. WHEN EITHER OF THE HEAT PUMP (HP-1 OR HP-2) IS "ON" ACTIVATE HEAT RECOVERY UNIT.

1 / M501 RENEWAIRE HEAT RECOVERY DETAIL
N.T.S.

31 Oct 2005 - 9:15a G:\DATA\arch\WISDOT 001044954 Madison SWEF\1_Arch\5 Final PS&E (Construction Documents)\03 Drawings\MEP Final\05036 - M501.dwg by: sbau2

PLANS PREPARED BY: IBC ENGINEERING SERVICES INC. WAUKESHA, WI		VAI# 001044954	HVAC DETAILS	DATE: 11/1/05	FINAL PS & E
STATE PROJECT NUMBER: 1002-02-72	HWY: I-39/90	COUNTY: DANE	MADISON SAFETY & WEIGHT FACILITY NO. 16	SCALE, FEET 0	SHEET NO: OF / DWG. M501 62

WATER SOURCE HEAT PUMPS

PLAN DESIGNATION		HP-1	HP-2
MANUFACTURER		TRANE	TRANE
MODEL		WPVJ-024	WPVJ-060
SUPPLY AIR - CFM		960	2,200
FLUID		30% PROP GLYCOL	30% PROP GLYCOL
FLUID FLOW RATE - GPM		6.1	14.9
FLUID PRESSURE DROP - FT WC (MAX)		20	20
COOLING PERFORMANCE	TOTAL CAPACITY - MBH	22.7	60.7
	SENSIBLE CAPACITY - MBH	17	48
	ENTERING WATER TEMP - F	86	86
	LEAVING WATER TEMP - F	95.4	96.3
	MIN EER	14.4	14.0
	REJECTED HEAT - MBH	28.6	76.5
HEATING PERFORMANCE	CAPACITY - MBH	20.3	48.6
	ENTERING WATER TEMP - F	32	32
	LEAVING WATER TEMP - F	27.2	27.4
	MIN COP	3.5	3.5
	ABSORBED - MBH	14.5	34.6
HEAT-RECLAIM CONDENSER	WATER FLOW - GPM	NA	NA
	ENTERING WATER TEMP - F	NA	NA
	LEAVING WATER TEMP - F	NA	NA
	PRESS DROP - FT WC	NA	NA
	FOULING FACTOR	NA	NA
ELECTRICAL	MCA	15.8	40.5
	MOP	25	60
	VOLTS/PHASE	230 / 1Ø	230 / 1Ø
CABINET	SIZE - IN	22.5x45x21.5	26.25x55x31.5
	OPERATING WEIGHT - LBS	300	440
NOISE RATING - Dba		41	52

ACCESSORIES – FLOW CONTROL CENTER SIZED FOR DESIGN GPM & 50 FEET MIN. HEAD.
PROVIDE DUCT SMOKE DETECTOR FOR HP-2

PACKAGED TERMINAL AIR CONDITIONER

PLAN DESIGNATION		PT-1
MANUFACTURER		TRANE
SERVICE		OFFICE 110
MODEL		PTED0901G
MOUNTING		THROUGH WALL
AIRFLOW	SUPPLY AIR - CFM	310
	OUTSIDE AIR - CFM	70
	ESP - IN WC	0.30
FAN	QUANTITY	1
	HORSEPOWER EACH	FRAC
	VOLTS / PHASE	230/1Ø
HEATING	CAPACITY - KW	3.5
	NATURAL GAS INPUT - BTU	--
COOLING	SENSIBLE CAPACITY - MBH	NA
	TOTAL CAPACITY - MBH	9,300
ELECTRICAL	TOTAL AMPS	15.4
	MOP	20

1. PROVIDE WALL MOUNTED THERMOSTAT

GENERAL NOTES

1. MECHANICAL CONTRACTOR SHALL COORDINATE HIS WORK WITH EXISTING CONDITIONS AND WITH THE WORK OF OTHER TRADES.
2. THESE DRAWINGS ARE A DIAGRAMMATIC REPRESENTATION OF WORK TO BE ACCOMPLISHED AND AS SUCH DO NOT SHOW ALL REQUIRED OFFSETS OF PIPING. MECHANICAL CONTRACTOR SHALL INSTALL MATERIAL AND EQUIPMENT AS TO CONFORM TO THE STRUCTURE, EQUIPMENT CONNECTIONS AND MAINTAIN HEADROOM AND PASSAGEWAY.
3. COORDINATE EXACT LOCATION OF CEILING DIFFUSERS AND GRILLES WITH REFLECTED CEILING PLAN.
4. KEYNOTES PERTAIN ONLY TO THE DRAWING THEY ARE LOCATED ON.
5. DUCT SIZES ARE CLEAR INSIDE DIMENSIONS.
6. ALL BRANCH DUCTS SHALL MATCH DIFFUSER NECK SIZES UNLESS OTHERWISE NOTED.
7. MAINTAIN 15' MINIMUM DISTANCE FROM OUTSIDE AIR INTAKE TO ANY EXHAUST OR TOILET VENTS.
8. FLEXIBLE DUCTWORK SHALL NOT EXCEED 5'-0" IN LENGTH.

ENERGY RECOVERY UNIT

PLAN DESIGNATION		ER-1
MANUFACTURER		RENEWAIRE
MODEL		HE900V
SERVICE		HR-1 & HR-2
LOCATION		MECH 105
TYPE		STATIC PLATE
EFFECTIVENESS	WINTER/SUMMER	61%/41%
EXHAUST AIR	AIRFLOW - CFM	800
	MAX FACE VELOCITY - FPM	300
	MAX PRESSURE DROP - IN WC	0.75
EXHAUST FAN	HP	0.75
	VOLTS/PHASE	230/1Ø
SUPPLY AIR	AIRFLOW - CFM	800
	MAX FACE VELOCITY - FPM	300
	MAX PRESSURE DROP - IN WC	0.75
SUPPLY FAN	HP	0.75
	VOLTS/PHASE	230/1Ø
ELECTRICAL	FLA	4.3
	MCA	9.7

LEGEND

	NEW HVAC EQUIPMENT
	NEW DUCTWORK
S-*	NEW SUPPLY DIFFUSER
R-*/E-*	NEW RETURN/EXHAUST GRILLE
R-*/E-*	NEW RETURN/EXHAUST GRILLE WITH DAMPER
T-*	NEW TRANSFER GRILLE
T	THERMOSTAT
$	WALL SWITCH
HP	NEW HEAT PUMP WATER SUPPLY & RETURN PIPING
	DUCT UP
	DUCT DOWN
	FLEX DUCT
M	MOTORIZED DAMPER
	HORIZONTAL FIRE DAMPER
	VERTICAL FIRE DAMPER
	BALANCING DAMPER
	TRANSFER/DOOR GRILLE
	ELBOW WITH TURNING VANES
	AIR FLOW INDICATOR
UC	DOOR UNDER CUT
*	KEY NOTE
	BALL VALVE
	GATE VALVE
	CONTROL VALVE
	PIPE ELBOW DOWN
	PIPE ELBOW UP
	CAPPED PIPE END

LOUVERS

PLAN DESIGNATION		OAL-1	EAL-1
MANUFACTURER		RUSKIN	RUSKIN
MODEL		ELF375DX	ELF375DX
CONSTRUCTION	TYPE	DRAINABLE	DRAINABLE
	MATERIAL	ALUMINUM	ALUMINUM
CFM		800	800
SIZE	WIDTH	24	16
	HEIGHT	24	32
	DEPTH	4	4
MAX FREE AREA VELOCITY		700	700
MAX PRESSURE DROP - IN WC		0.09	0.09
FINISH		KYNAR	KYNAR
ACCESSORIES	EXTENDED SILL	X	X
	HINGED FRAME		
	SECURITY BARS		
	FILTER RACKS		
	INSECT SCREEN	X	X

ELECTRIC CABINET HEATERS

PLAN DESIGNATION		ECH-1	ECH-2
MANUFACTURER		QMARK	QMARK
MODEL		AWH4507	AWH4404
LOCATION		ENTRY 100	ENTRY 106
MOUNTING		SEMI-RECESSED	SEMI-RECESSED
CAPACITY - BTUH		10,240	6,820
CFM		100	100
ELECTRICAL	KW	3.6	2.0
	VOLTS/PHASE	230/1Ø	230/1Ø
	AMPS	17.3	8.3
CABINET SIZE	HEIGHT	19 3/16"	19 3/16"
	WIDTH	15 3/4"	15 3/4"
	DEPTH	4"	4"
REMARKS		1	1

1. PROVIDE DISCONNECTS AND SEMI RECESSED MOUNTING FRAMES AS NEEDED. (FIELD VERIFY DEPTH REQUIRED)
2. PROVIDE INTEGRAL THERMOSTATS.

ELECTRIC UNIT HEATERS

PLAN DESIGNATION		EUH-1	EUH-2	EUH-3
MANUFACTURER		QMARK	QMARK	QMARK
MODEL		MUH0521	MUH0321	MUH0321
LOCATION		STORAGE 103	TELECOMM 104	MECH 105
MOUNTING		WALL/CEILING	WALL/CEILING	WALL/CEILING
CAPACITY - BTUH		15,630	9,420	9,420
CFM		350	350	350
ELECTRICAL	KW	5.0	3.0	3.0
	VOLTS/PHASE	230/1Ø	230/1Ø	230/1Ø
	AMPS	21	12.5	12.5
CABINET SIZE	HEIGHT	16"	16"	16"
	WIDTH	14"	14"	14"
	DEPTH	7 1/2"	7 1/2"	7 1/2"
REMARKS				

* PROVIDE INTEGRAL THERMOSTATS.

VENTILATION SCHEDULE HP-1

ROOM NUMBER	ROOM NAME	AREA (SQ FT)	OCCUPANCY CLASSIFICATION	DENSITY (PEOPLE/1000 SQ FT)	CALCULATED PEOPLE	REQUIRED EXHAUST	REQUIRED OUTSIDE AIR (CFM)
107	STAFF TOILET	84	TOILET ROOM	NA	NA	150	NA
108	TROOP/BREAK ROOM	450	OFFICE	7	3	--	22.5
110	JANITOR CLOSET	51	JANITOR CLOSET	NA	NA	75	NA
ROOMS NOT ON SCHEDULE ARE UNOCCUPIED.							
Minimum required outdoor air ventilation for HP-1 air handling appliance is 22.5 CFM							

VENTILATION SCHEDULE HP-2

ROOM NUMBER	ROOM NAME	AREA (SQ FT)	OCCUPANCY CLASSIFICATION	DENSITY (PEOPLE/1000 SQ FT)	CALCULATED PEOPLE	REQUIRED EXHAUST	REQUIRED OUTSIDE AIR (CFM)
101	WOMENS	58	TOILET ROOM	NA	NA	75	NA
102	MENS	70	TOILET ROOM	NA	NA	75	NA
109	OFFICE	160	OFFICE	7	1	--	7.5
111	INTOX/RPTS	53	OFFICE	7	1	--	7.5
112	SCALE/SVCR	390	OFFICE	7	3	--	22.5
113	DRIVERS ROOM	165	OFFICE	7	1	--	7.5
ROOMS NOT ON SCHEDULE ARE UNOCCUPIED.							
Minimum required outdoor air ventilation for HP-2 air handling appliance is 45 CFM							

DIFFUSERS & GRILLES

PLAN DESIGNATION		S-1	S-2	R-1	E-1	E-2	E-3
MANUFACTURER		TITUS	TITUS	TITUS	TITUS	TITUS	TITUS
MODEL		301RS	TDC	355RL	50F	355RL	355RL
CONSTRUCTION	TYPE	LOUVER	LOUVERED	LOUVER	EGGCRATE	LOUVER	LOUVER
	MOUNTING	DUCT	LAY-IN	SIDEWALL	SURFACE	DUCT	DUCT
CFM		0-200	0-240	0-860	0-150	0-100	101-200
GRILLE SIZE		12x6	18x18	24x16	10x10	12x6	12x10
DUCT SIZE		12x6	8"Ø	24x16	10x10	12x6	12x10
NC		13	20	22	--	--	13
ACCESSORIES	OPPOSED BLADE DAMPERS	X		X			
	FILTERS						

BASEBOARD RADIATORS

PLAN DESIGNATION		BBR-1	BBR-2	BBR-3	BBR-4	BBR-5	BBR-6	BBR-7
MANUFACTURER		QMARK	QMARK	QMARK	QMARK	QMARK	QMARK	QMARK
MODEL		DBA06250	DBA06250	DBA06250	DBA06250	DBA06250	DBA06250	DBA06250
MOUNTING		WALL	WALL	WALL	WALL	WALL	WALL	WALL
BTU PER LINEAR FOOT @ 170F AWT, 70F EAT		5,120	5,120	5,120	5,120	5,120	5,120	5,120
ELECTRICAL	KW	1.5	1.5	1.5	1.5	1.5	1.5	1.5
	AMPS	6.3	6.3	6.3	6.3	6.3	6.3	6.3
	VOLTS/PHASE	230/1Ø	230/1Ø	230/1Ø	230/1Ø	230/1Ø	230/1Ø	230/1Ø
	LENGTH	72"	72"	72"	72"	72"	72"	72"
WALL TO WALL ENCLOSURE		12 GA STEEL	12 GA STEEL	12 GA STEEL	12 GA STEEL	12 GA STEEL	12 GA STEEL	12 GA STEEL

PROVIDE (1) WALL MOUNTED T-STAT TO CONTROL ALL BASEBOARDS IN ROOM 113.
PROVIDE INTEGRAL T-STAT FOR BBR-1

ABBREVIATIONS

AFF	ABOVE FINISHED FLOOR
AFG	ABOVE FINISHED GRADE
C	CONDUIT
CKT	CIRCUIT
CB	CIRCUIT BREAKER
CL	MOUNTED ON CEILING
D	DEDICATED
DD	DOUBLE DUPLEX
EC	ELECTRICAL CONTRACTOR
EWC	ELECTRIC WATER COOLER
FAAP	FIRE ALARM ANNUNCIATOR PANEL
FACP	FIRE ALARM CONTROL PANEL
FSS	FUSED SAFETY SWITCH
GC	GENERAL CONTRACTOR
GFI	GROUND FAULT INTERRUPTER
HV	HEATING AND VENTILATION CONTRACTOR
IG	ISOLATED GROUND
IR	IN ROOM
IU	IN UNIT
CL	CEILING MOUNTED
MAN	MANUAL STARTER
MAG	MAGNETIC STARTER
MCA	MINIMUM CIRCUIT AMPACITY
NFSS	NON FUSED SAFETY SWITCH
NIC	NOT IN CONTRACT
NL	NIGHT LIGHT
NU	NEAR UNIT
PB	PUSH-BUTTON
PC	PLUMBING CONTRACTOR
SW	SWITCH
TC	TIME CLOCK
TS	THERMOSTAT
UM	UNIT MANUFACTURER
WP	WEATHERPROOF

ELECTRICAL LEGEND

	WALL SWITCH
	DUAL LEVEL SWITCH
$DM	DIMMER
OS	WALL OCCUPANCY SENSOR
OS	CEILING OCCUPANCY SENSOR
J	JUNCTION BOX
	SURFACE MOUNT WRAPAROUND FIXTURE
	4x2 LIGHTING FIXTURE
	WALL BRACKET
	WALL MOUNTED FIXTURE
	RECESSED FIXTURE
	CEILING MOUNTED FIXTURE
	STRIP/INDUSTRIAL FIXTURE
	EMERGENCY WALL PACK
	CEILING MOUNTED EXIT
	WALL MOUNTED EXIT
	BOLLARD LIGHT FIXTURE
	DUPLEX RECEPTACLE
	DUPLEX RECEPTACLE 6" ABOVE COUNTER OR BACKSPLASH OR AT HEIGHT INDICATED
	FOUR PLEX RECEPTACLE
GFI	DUPLEX RECEPTACLE - GROUND FAULT INTERRUPT
	SPECIAL PURPOSE OUTLET
**	PANEL BOARD
A	POWER AMPLIFIER
MX	MULTIPLEXER
PC	PHOTOCELL
C	LIGHTING CONTACTOR
	SERVICE GROUND

	TRANSFORMER
M	METER
	CURRENT TRANSFORMER
	MANUAL DISCONNECT
	NON-FUSED DISCONNECT
	FUSED DISCONNECT
	MAGNETIC STARTER
	COMBINATION STARTER
	MOTOR
	TELEPHONE OUTLET
	DATA OUTLET
	TELEPHONE/DATA OUTLET
TV	TELEVISION OUTLET
S	HORN SPEAKER
	SECURITY CAMERA
	FIRE ALARM PULL STATION
AV	FIRE ALARM HORN STROBE
V	FIRE ALARM STROBE
H	FIRE ALARM HEAT DETECTOR
S	FIRE ALARM SMOKE DETECTOR
S	FIRE ALARM DUCT DETECTOR
FS	FIRE ALARM FLOW SWITCH
TS	FIRE ALARM TAMPER SWITCH
DH	FIRE ALARM DOOR HOLDER
	FIRE ALARM BELL
CM	FIRE ALARM CONTROL MODULE
MM	FIRE ALARM MONITOR MODULE
FACP	FIRE ALARM CONTROL PANEL
FAA	FIRE ALARM ANNUNCIATOR PANEL
RTS	REMOTE TEST SWITCH
NAC	FIRE ALARM NAC PANEL

PLANS PREPARED BY: IBC ENGINEERING SERVICES INC. WAUKESHA, WI		VAI# 001044954	ELECTRICAL LEGEND & ABBREVIATIONS	DATE: 11/1/05	FINAL PS & E
STATE PROJECT NUMBER: 1002-02-72	HWY: I-39/90	COUNTY: DANE	MADISON SAFETY & WEIGHT FACILITY NO. 16	SCALE, FEET 0	SHEET NO: OF / DWG. E100 of 5

KEY NOTES

1. PROVIDE PHOTOCELL MOUNT ON (WALL OR EAVE) JUST BELOW EAVE. AIM FOR PROPER OPERATION. INTERLOCK WITH CONTACTOR "A" FOR PHOTO-ON, PHOTO-OFF EXTERIOR LIGHTING OPERATION.
2. PROVIDE TYPICAL DUAL CIRCUIT DUAL LEVEL SWITCHING OF LIGHT FIXTURE CROSS-SECTION LAMPS.
3. PROVIDE WALLBOX 0-10V FLUORESCENT DIMMABLE BALLAST CONTROLLER WITH ON/OFF SWITCH AS WELL AS SLIDE DIMMER (TYPICAL).
4. PROVIDE WALLBOX INCANDESCENT SLIDE DIMMER AS MANUFACTURED BY LUTRON NOVA-T (TYPICAL).
5. PROVIDE FLUSH MOUNTED LOW LEVEL PATHWAY LIGHT. MOUNT 20" ABOVE LANDING/STAIR TREADS. COORDINATE EXACT LOCATION WITH ARCHITECT (TYPICAL).
6. MOUNT AT EAVE AND AIM SO AS TO GRAZE DOWN FACADE.
7. PROVIDE PHOTOCELL MOUNT ON (WALL OR EAVE) JUST BELOW EAVE. AIM FOR PROPER OPERATION. INTERLOCK WITH PILOT LIGHT SWITCH CONTROLLING TYPE "OB" CANOPY MOUNTED DOWNLIGHT WALL WASH FLOODLIGHTS.

GENERAL NOTES

1. WIRE ALL EXIT SIGNS AND EBU'S TO LIGHTING BRANCH CIRCUIT SERVING AREA AHEAD OF CONTROLS.

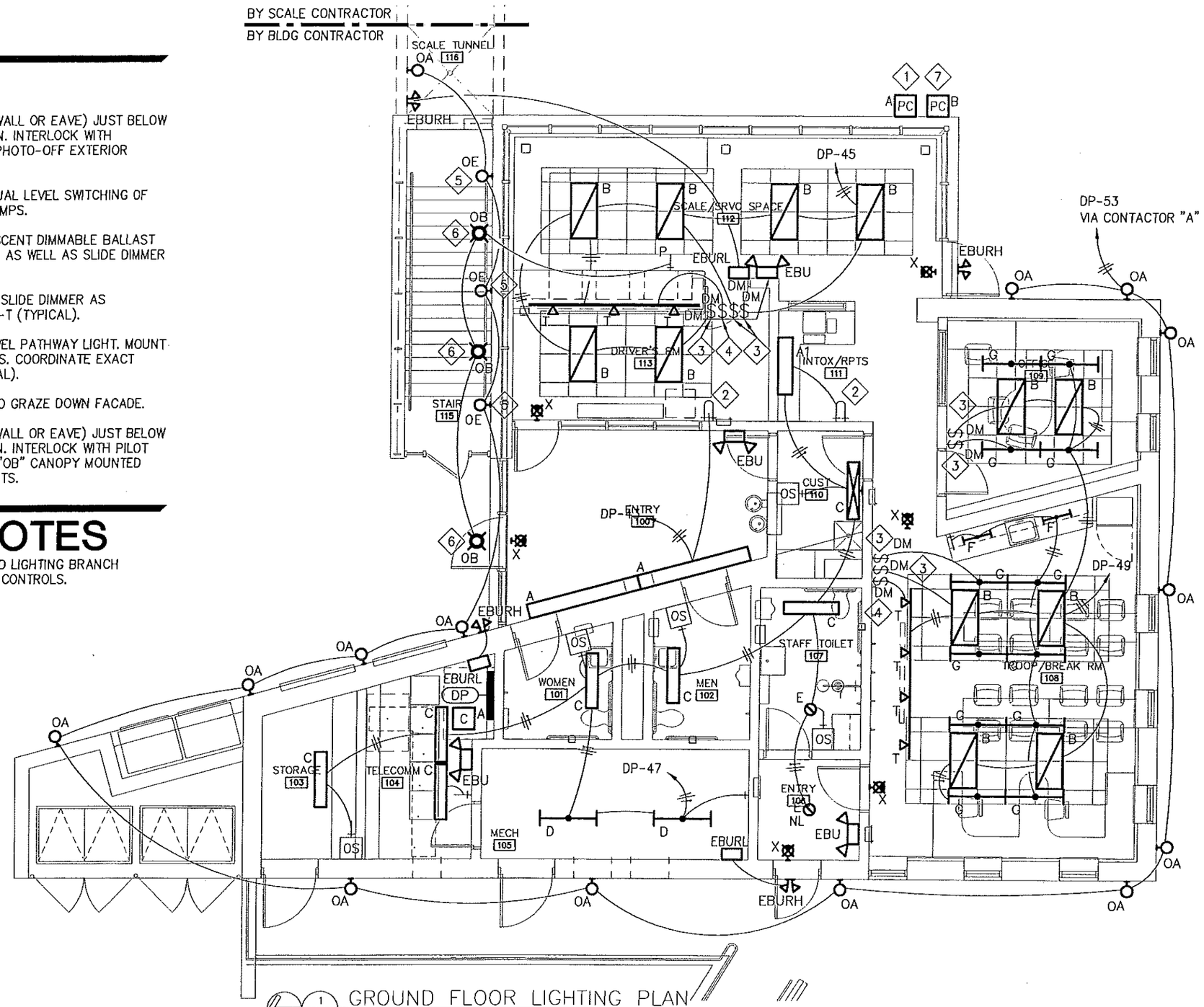

GROUND FLOOR LIGHTING PLAN
1 E101 ⅛" = 1'-0"

PLANS PREPARED BY: IBC ENGINEERING SERVICES INC. WAUKESHA, WI		VAI# 001044954	GROUND FLOOR LIGHTING PLAN	DATE: 11/1/05	FINAL PS & E
STATE PROJECT NUMBER: 1002-02-72	HWY: I-39/90	COUNTY: DANE	MADISON SAFETY & WEIGHT FACILITY NO. 16	SCALE, FEET 0	SHEET NO: OF / DWG. E101 66

31 Oct 2005 - 9:21a G:\DATA\arch\WISDOT 001044954 Madison SWEF\1_Arch\5 Final PS&E (Construction Documents)\03 Drawings\MEP Final\05036 - E101.dwg by: sbau2

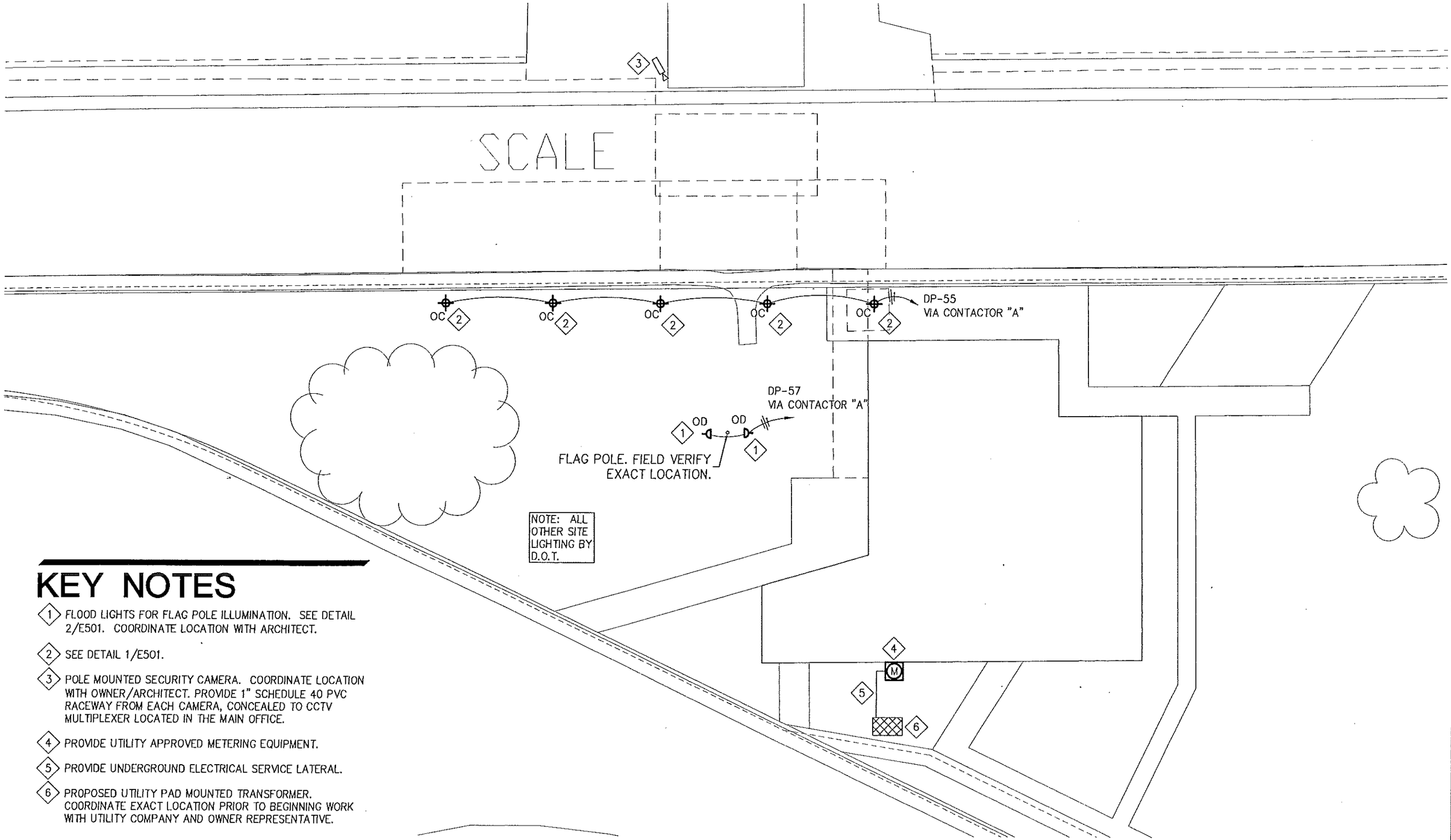

KEY NOTES

1. FLOOD LIGHTS FOR FLAG POLE ILLUMINATION. SEE DETAIL 2/E501. COORDINATE LOCATION WITH ARCHITECT.
2. SEE DETAIL 1/E501.
3. POLE MOUNTED SECURITY CAMERA. COORDINATE LOCATION WITH OWNER/ARCHITECT. PROVIDE 1" SCHEDULE 40 PVC RACEWAY FROM EACH CAMERA, CONCEALED TO CCTV MULTIPLEXER LOCATED IN THE MAIN OFFICE.
4. PROVIDE UTILITY APPROVED METERING EQUIPMENT.
5. PROVIDE UNDERGROUND ELECTRICAL SERVICE LATERAL.
6. PROPOSED UTILITY PAD MOUNTED TRANSFORMER. COORDINATE EXACT LOCATION PRIOR TO BEGINNING WORK WITH UTILITY COMPANY AND OWNER REPRESENTATIVE.

1 / E102 SITE LIGHTING PLAN
1/16" = 1'-0"

PLANS PREPARED BY: IBC ENGINEERING SERVICES INC. WAUKESHA, WI		VAI# 001044954	SITE LIGHTING PLAN	DATE: 11/1/05	FINAL PS & E
STATE PROJECT NUMBER: 1002-02-72	HWY: I-39/90	COUNTY: DANE	MADISON SAFETY & WEIGHT FACILITY NO. 16	SCALE, FEET 0	SHEET NO: OF / DWG. E102

KEY NOTES

1. RECEPTACLE FOR TV MOUNTED TO ROOF DECK.
2. EC SHALL 24V POWER SUPPLY COMPATIBLE WITH LOCKNETICS MODEL PRO5196-FSE, HARDWIRED 24 VOLT PROGRAMMABLE DOOR LOCKS. PROVIDE DEDICATED 20A,1P CIRCUIT DP-74 TO ALL TRANSFORMER PRIMARIES AND PROVIDE HANDLE LOCK FOR BRANCH CIRCUIT BREAKER.

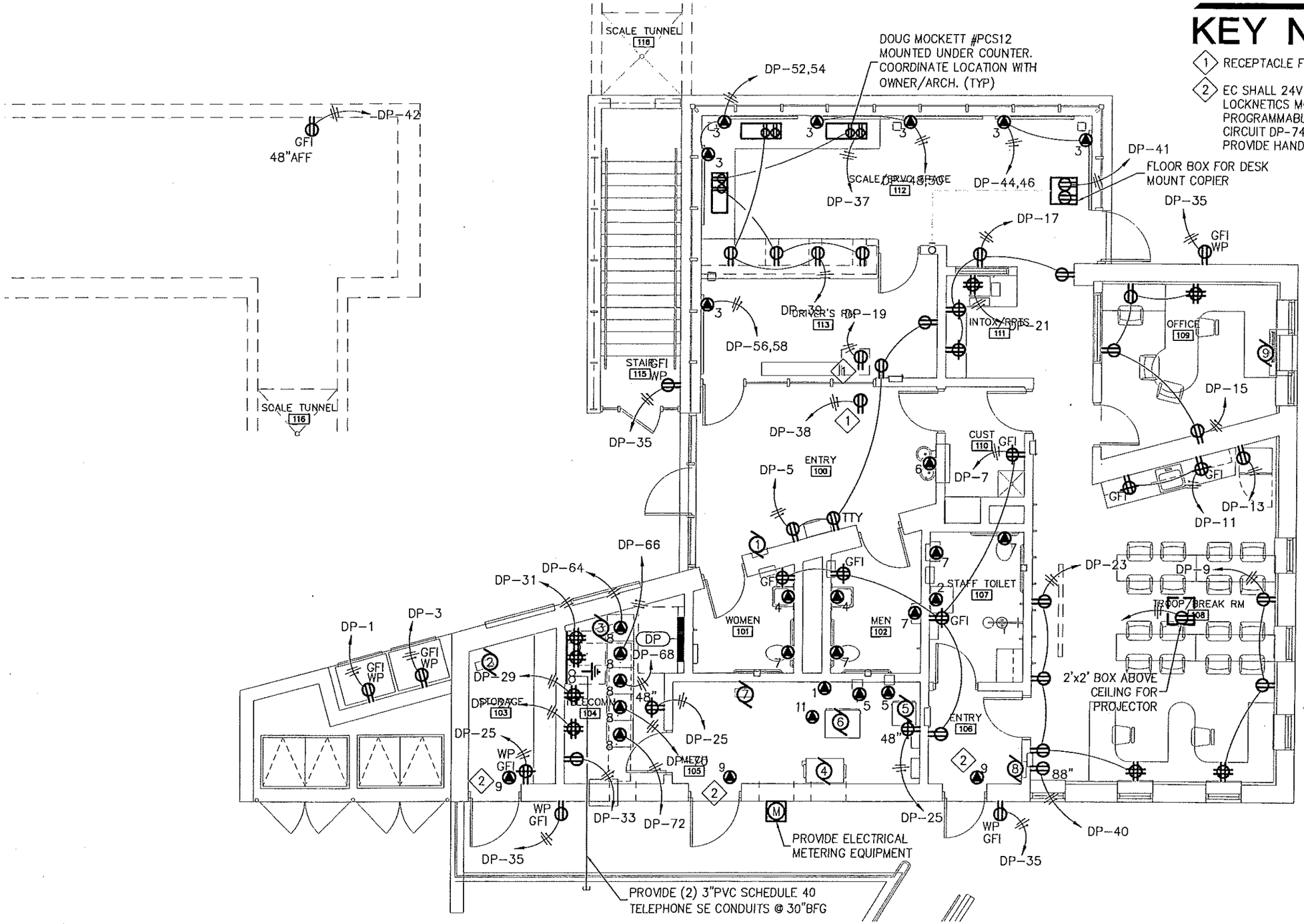

1 E103 GROUND FLOOR POWER PLAN
1/8" = 1'-0"

PLANS PREPARED BY: IBC ENGINEERING SERVICES INC. WAUKESHA, WI		VAI# 001044954	GROUND FLOOR POWER PLAN	DATE: 11/1/05	FINAL PS & E
STATE PROJECT NUMBER: 1002-02-72	HWY: I-39/90	COUNTY: DANE	MADISON SAFETY & WEIGHT FACILITY NO. 16	SCALE, FEET 0	SHEET NO: OF / DWG. E103 68

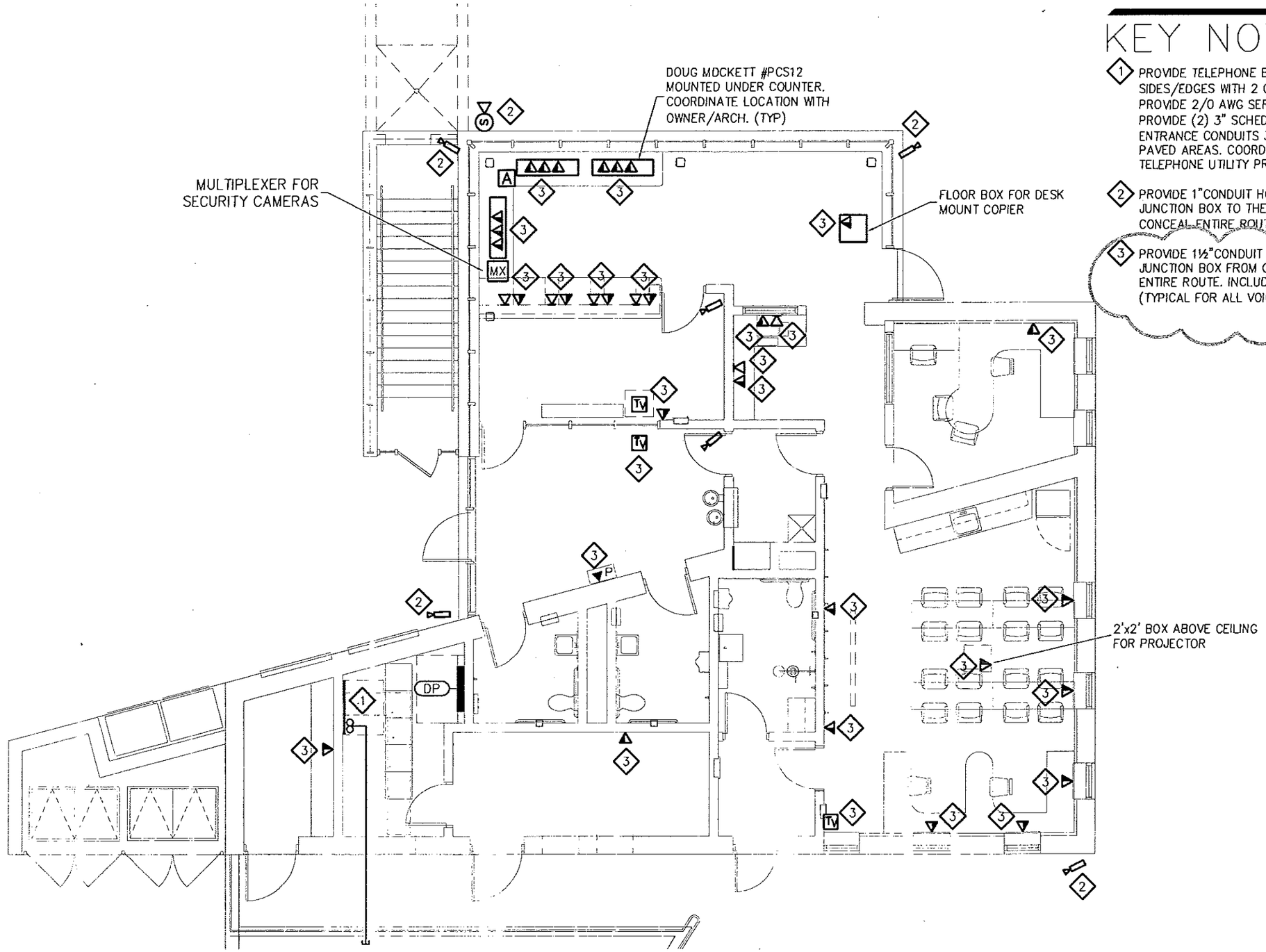

KEY NOTES

1. PROVIDE TELEPHONE BACKBOARD. 4'x8'x¾" PAINTED ALL SIDES/EDGES WITH 2 COATS OF FIRE RETARDANT PAINT. PROVIDE 2/0 AWG SERVICE GROUND AND GROUND BUS. PROVIDE (2) 3" SCHEDULE 40 PVC TELEPHONE SERVICE ENTRANCE CONDUITS 30" BELOW FINAL GRADE BEYOND PAVED AREAS. COORDINATE EXACT DIRECTION WITH LOCAL TELEPHONE UTILITY PROVIDER.
2. PROVIDE 1"CONDUIT HOMERUNS FROM EACH CAMERA JUNCTION BOX TO THE SECURITY CAMERA MULTIPLEXER. CONCEAL ENTIRE ROUTE (TYPICAL).
3. PROVIDE 1½"CONDUIT FROM 4" SQUARE FLUSH MOUNTED JUNCTION BOX FROM OUTLET TO TELECOM RACKS. CONCEAL ENTIRE ROUTE. INCLUDE NYLON PULLCORD FOR CABLING (TYPICAL FOR ALL VOICE, DATA AND TV OUTLETS).

1

1 E104 GROUND FLOOR SYSTEMS PLAN
⅛" = 1'-0"

PLANS PREPARED BY: VIERBICHER ASSOCIATES, INC. REEDSBURG, WI		VAI# 001044954	GROUND FLOOR SYSTEMS PLAN	DATE: 11/1/05	FINAL PS & E
STATE PROJECT NUMBER: 1002-02-72	HWY: I-39/90	COUNTY: DANE	MADISON SAFETY & WEIGHT FACILITY NO. 16	SCALE, FEET 0	SHEET NO: OF / DWG. E104
				REVISION: 1 DATE: 2/10/08	BY: IBC

10 Feb 2006 - 1:57p C:\Documents and Settings\mrob\Desktop\05036 - E104-mr.dwg by: mrob

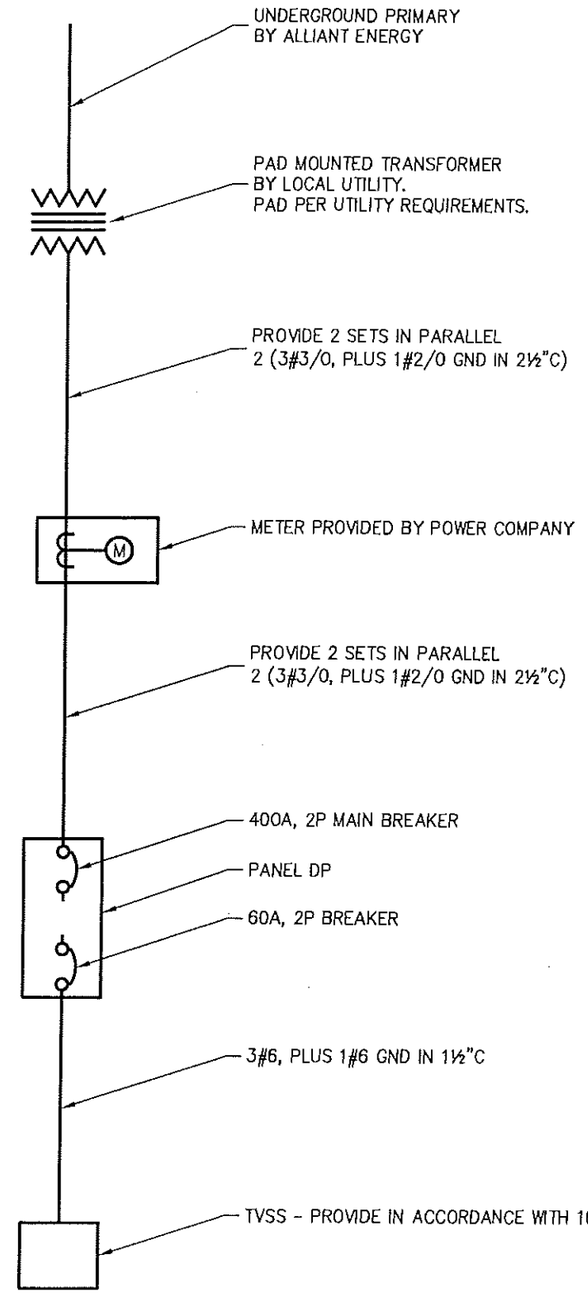

PLANS PREPARED BY: IBC ENGINEERING SERVICES INC. WAUKESHA, WI		VAI# 001044954	POWER RISER DIAGRAM	DATE: 11/1/05	FINAL PS & E
STATE PROJECT NUMBER: 1002-02-72	HWY: I-39/90	COUNTY: DANE	MADISON SAFETY & WEIGHT FACILITY NO. 16	SCALE, FEET 0	SHEET NO: OF / DWG. E501 70

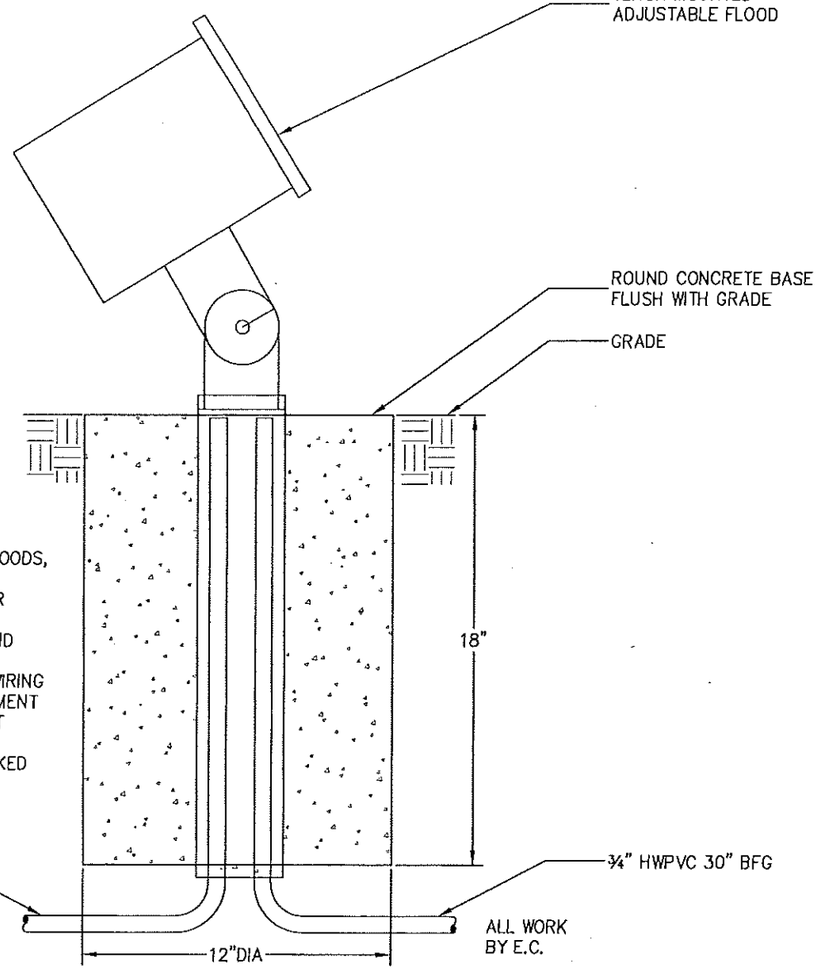

NOTES:
-FLOOD LOCATIONS SHALL BE DETERMINED BY NIGHT TRIALS.
-CONTRACTOR SHALL PROVIDE FLOODS, EXTENSION CORDS, AND ONE ELECTRICIAN FOR MARKUPS AFTER DARK.
-IN CONJUNCTION WITH OWNER AND ENGINEER, SIMULATE THE FINAL INSTALLATION WITH TEMPORARY WIRING AND ASSIST IN ADJUSTING PLACEMENT AND AIMING TO ACHIEVE THE BEST EFFECT.
-FINAL LOCATIONS SHALL BE STAKED AND AIMING RECORDED.

2 FLOODLIGHT BASE DETAIL
N.T.S.

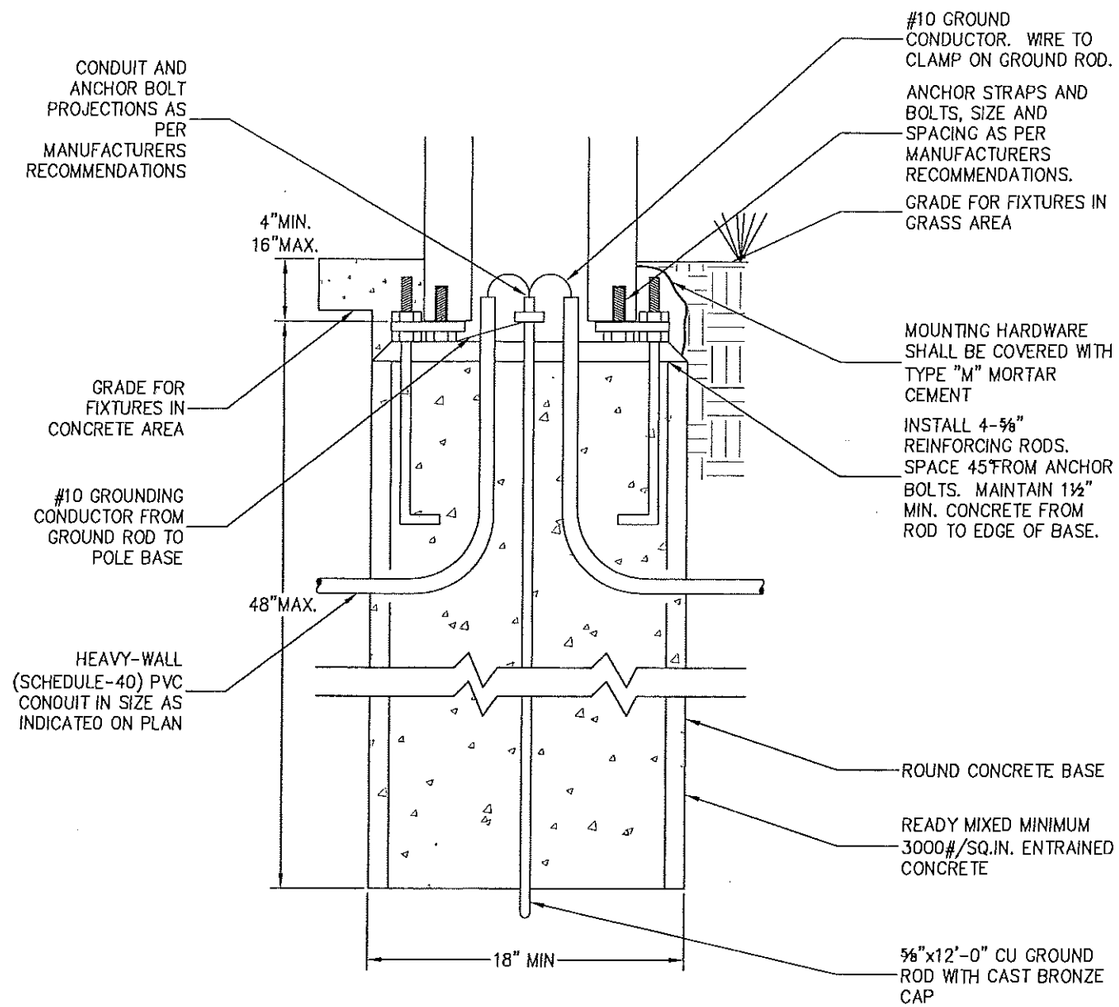

1 BOLLARD BASE DETAIL
N.T.S.

PLANS PREPARED BY: IBC ENGINEERING SERVICES INC. WAUKESHA, WI		VAI# 001044954	ELECTRICAL DETAILS	DATE: 11/1/05	FINAL PS & E
STATE PROJECT NUMBER: 1002-02-72	HWY: I-39/90	COUNTY: DANE	MADISON SAFETY & WEIGHT FACILITY NO. 16 SCALE, FEET 0	SHEET NO: OF	DWG. E502 71

MOTOR WIRING SCHEDULE

NO.	DRIVING	LOC.	HP	FLA	VOLT	PH.	FEED FROM		BREAKER		BRANCH WIRING				STARTER					DISCONNECT					REMARKS
							PANEL	CIRCUIT	SIZE	POLE	NO.	SIZE	GND	COND	TYPE	FURN	INS	WIRED	LOC.	TYPE	FURN	INS	WIRED	LOC.	
1	ECH-1	100	3.6KW	17.3	240	1	DP	2,4	25	2	2	10	10	1/2"	MAN	MC	EC	EC	NU	NFSS	EC	EC	EC	NU	
2	EUH-1	103	5KW	21	240	1	DP	6,8	30	2	2	10	10	1/2"	MAN	MC	EC	EC	NU	NFSS	EC	EC	EC	NU	
3	EUH-2	104	3KW	12.5	240	1	DP	10,12	20	2	2	12	12	1/2"	MAN	MC	EC	EC	NU	NFSS	EC	EC	EC	NU	
4	ER-1	105	(2) 3/4	4.3	240	1	DP	14,16	20	2	2	12	12	1/2"	MAG	MC	EC	EC	NU	FSS	EC	EC	EC	NU	
5	HP-1	105	3/4	15.8	240	1	DP	18,20	25	2	2	10	10	1/2"	MAG	MC	EC	EC	NU	FSS	EC	EC	EC	NU	
6	HP-2	105	3/4	40.5	240	1	DP	22,24	60	2	2	4	4	1 1/4"	MAG	MC	EC	EC	NU	NFSS	EC	EC	EC	NU	
7	EUH-3	105	3KW	12.5	240	1	DP	26,28	20	2	2	12	12	1/2"	MAN	MC	EC	EC	NU	NFSS	EC	EC	EC	NU	
8	ECH-2	106	2KW	8.3	240	1	DP	30,32	20	2	2	12	12	1/2"	MAN	MC	EC	EC	NU	NFSS	EC	EC	EC	NU	
9	PT-1	110	FRAC	15.4	240	1	DP	34,36	20	2	2	12	12	1/2"	MAG	MC	EC	EC	NU	NFSS	EC	EC	EC	NU	
10	SP-1	SCALE	(2) 3	–	240	1	DP	82	40	2	2	8	12	3/4"	–	PC	CP	EC	CP	NFSS	EC	EC	EC	NU	

SPECIAL PURPOSE OUTLET SCHEDULE

MARK	TO FEED	LOCATION	FLA	VOLT	PH	FEED FROM		BREAKER		WIRE				TYPE			SEE
						PANEL	CKT	SIZE	POLE	NO.	SIZE	GND	COND	RECPT	DIRECT	OTHER	NOTE
1	WH-1	105	23	240	1	DP	60, 62	30	2	2	10	10	3/4"		X		
2	L-2 FAUCET SENSOR	107	1	120	1	DP	76	20	1	2	12	12	1/2"		X		
3	BBR (TYP OF 7)	SEE PLAN	6.3	240	1	SEE PLAN		20	2	2	12	12	1/2"		X		
4	L-1 FAUCET SENSOR (2)	SEE PLAN	1	120	1	DP	76	20	1	2	12	12	1/2"		X		
5	MOTORIZED DAMPER (2)	SEE PLAN	1	120	1	DP	76	20	1	2	12	12	1/2"		X		
6	EWC-1	100	5	120	1	DP	80	20	1	2	12	12	1/2"		X		
7	FLUSH VALVE (5)	SEE PLAN	5	120	1	DP	76	20	1	2	12	12	1/2"			X	
8	DATA RACK (5)	SEE PLAN	8	120	1	SEE PLAN		20	1	2	12	12	1/2"	X			
9	DOOR LOCK (3)	SEE PLAN	5	120	1	DP	74	20	1	2	12	12	1/2"			X	
10	SUMP CONTROL PANEL	SEE PLAN	3	120	1	DP	67	20	1	2	12	12	3/4"		X		
11	DUCT SMOKE DETECTOR	SEE PLAN	10	120	1	DP	78	20	1	2	12	12	1/2"		X		

LIGHTING SCHEDULE

FIXT.	DESCRIPTION	LAMPING		VOLT	MANUFACTURER	CATALOG NUMBER	SEE NOTE
A	8' WALL MTD DIRECT/INDIRECT	4	F32T8	120	AXIS LIGHTING	LUWFT5HO2XE1202	1
A1	4' WALL MTD DIRECT/INDIRECT	2	F32T8	120	AXIS LIGHTING	LUWFT5HO2XE1202	1
B	DIMMING 2x4 LAY IN DIRECT/INDIRECT	3	F32T8	120	METALUX	2RDI332RP120DIMRLS	2
C	1x4 WRAPAROUND	2	F32T8	120	METALUX	SA232A120EB8PS	
D	4' INDUSTRIAL FLUORESCENT	2	F32T8	120	METALUX	VT2232DREB8PS120	
E	COMPACT FLUOR. RECESSED DOWNLIGHT	2	F26DTT/4P	120	PORTFOLIO	C7226-IE-7251-H	
F	2' UNDERCABINET	2	F24T5HO	120	ALKCO	LINCS100H023	
G	DIMMING 4' BACKLIGHT STRIP	1	F32T8	120	METALUX	SN132DIM120	3
T	TRACK LIGHT SPOT	1	55W PAR16	120	HALO	L1701MB-L283MB-L653NB	
OA	MH UP/DOWN WALL LUMINAIRE	1	70W MH/T6	120	INVUE	ENT70MH120EBFTGLGX-XX	
OB	MH CANOPY WALL GRAZER	1	70W MH/T6	120	INVUE	PHH70MH120EBHWF-WIB-XX-FR-VA3002	
OC	MH LIGHT BOLLARD	1	70W MH/T6	120	SURELITES	VXB42-70MHT6-120-XX-SF-VXBABK1T	
OD	MH FLAG POLE SPOT	1	70W MH/T6	120	INVUE	PHH70MH120EBNS-GIB-XX-F-VA300/XX	
OE	ROUND STEP LIGHT	1	39W MH/T6	120	LOUIS POULSEN	AHW-0-39 MH-120-XX-FROSTED	
X	LED EXIT	–	LED	120	INVUE	CX7-1-70-G-SD	
EBU	EM. BATTERY UNIT	2	25W/12V	120	SURELITES	CC8-SQ-SM-SD	
EBULH	EBU LESS HEADS	–		120	SURELITES	CC8-LH-SD	
EBURH	EBU REMOTE TWIN HEAD	2	25W/12V	120	SURELITES	12X25DWMHWHGY	

NOTES:

1. PROVIDE DUAL CIRCUIT OPTION FOR DUAL LEVEL SWITCHING.
2. PROVIDE 3 LAMP DIMMING FLUORESCENT BALLAST AND COMPATIBLE WALL BOX CONTROLLER.
3. PROVIDE DIMMING FLUORESCENT BALLAST AND COMPATIBLE WALL BOX CONTROLLER.

PANEL DP (LEFT)

MOUNT	SPACES	LOCATION	VOLTAGE	PH	WIRE	MAIN BUS RATING	MCB	MLO
SURFACE	42	105	120/240V	1	3	400A	400A	SUB FEED LUGS

POLE NO.	BREAKER POLE	BREAKER AMP	OUTLET LGT	OUTLET REC	OUTLET MIS	DESCRIPTION	VA	PHASE LOAD VA A	PHASE LOAD VA B	VA	DESCRIPTION	WIRE OUTLET LGT	WIRE OUTLET REC	WIRE OUTLET MIS	CONDUIT BREAKER POLE	CONDUIT BREAKER AMP	CONDUIT POLE NO.
1	1	20		X		DEDICATED VENDING	1500	3300		1800	ECH-1			X	2	25	2
3	1	20		X		DEDICATED VENDING	1500		3300	1800							4
5	1	20		X		4 REC 100, 114	720	2520		1800	ECH-2			X	2	25	6
7	1	20		X		5 REC 101, 102, 106, 107, 111	900		2700	1800							8
9	1	20		X		2 REC 1 QUAD 108	720	1720		1000	ECH-3			X	2	20	10
11	1	20		X		2 REC 108	360		1360	1000							12
13	1	20		X		DEDICATED REFRIG	180	1344		1164	ER-1			X	2	20	14
15	1	20		X		3 REC 1 QUAD	900		2064	1164							16
17	1	20		X		4 REC	540	2436		1896	HP-1			X	2	25	18
19	1	20		X		DEDICATED TV	180		2076	1896							20
21	1	20		X		DEDICATED COPIER	360	5220		4860	HP-2			X	2	60	22
23	1	20		X		3 REC 1 QUAD 108	900		5760	4860							24
25	1	20		X		3 REC 103, 104, 105	540	1540		1000	ECH-4			X	2	20	26
27	1	20		X		DEDICATED	360		1360	1000							28
29	1	20		X		DEDICATED	360	1360		1000	ECH-5			X	2	20	30
31	1	20		X		TELE/COMM	720		1720	1000							32
33	1	20		X		DEDICATED DATA RACKS	180	2028		1848	PT-1			X	2	20	34
35	1	20		X		4 REC EXTERIOR	720		2568	1848							36
37	1	20		X		6 REC 113	1080	1260		180	DEDICATED TV		X		1	20	38
39	1	20		X		4 REC 113	720		900	180	DEDICATED TV		X		1	20	40
41	1	20		X		2 REC 113	360	540		180	1 REC 115		X		1	20	42
						PHASE TOTALS:		23268	23808		:PHASE TOTALS						
						TOTAL VA:	13,800			33,276	:TOTAL VA						

PANEL DP (RIGHT)

MOUNT	SPACES	LOCATION	VOLTAGE	PH	WIRE	MAIN BUS RATING	MCB	MLO
SURFACE	42	105	120/240V	1	3	400A	–	400A

POLE NO.	BREAKER POLE	BREAKER AMP	OUTLET LGT	OUTLET REC	OUTLET MIS	DESCRIPTION	VA	PHASE LOAD VA A	PHASE LOAD VA B	VA	DESCRIPTION	WIRE OUTLET LGT	WIRE OUTLET REC	WIRE OUTLET MIS	CONDUIT BREAKER POLE	CONDUIT BREAKER AMP	CONDUIT POLE NO.
43	1	20	X			LTS 100 2A	484	1984		1500	BBR SPO 3			X	2	20	44
45	1	20	X			LTS 113, 114 6B 3T	687		2187	1500							46
47	1	20	X			LTS 101-107 6C 2D 2E	564	2064		1500	BBR SPO 3			X	2	20	48
49	1	20	X			LTS 108 4B 2F 8G 4T	866		2366	1500							50
51	1	20	X			LTS 110-112 1A1 2B 1C 4G	474	1974		1500	BBR SPO 3			X	2	20	52
53	1	20	X			LTS EXT 130A 30B	1280		2780	1500							53
55	1	20	X			LTS EXT 50C	400	1150		750	BBR SPO 3			X	2	20	56
57	1	20	X			LTS EXT 20D	160		910	750							58
59								2750		2750	WH-1			X	2	30	60
61	2	100				EXTERIOR SITE LIGHTING PANELBOARD			2750	2750							62
63								180		180	DATA RACK SPO 8		X		1	20	64
65	2	60				TVSS UNIT			180	180	DATA RACK SPO 8		X		1	20	66
67	1	20				CONTROL PANEL SPO 10		180		180	DATA RACK SPO 8		X		1	20	68
69									180	180	DATA RACK SPO 8		X		1	20	70
71								180		180	DATA RACK SPO 8		X		1	20	72
73											DOOR LOCKS SPO 9			X	1	20	74
75											TOILET ROOM SENSORS SPO'S 4,7			X	1	20	76
77									1000	1000	SPO 11			X	1	20	78
79								800		800	SPO 7			X	1	20	80
81											SPO 10			X	2	40	82
83																	84
						PHASE TOTALS:		11262	12353		:PHASE TOTALS						
						TOTAL VA:	4,915			18,700	:TOTAL VA						

PLANS PREPARED BY: IBC ENGINEERING SERVICES INC. WAUKESHA, WI	VAI# 001044954	ELECTRICAL SCHEDULES		DATE: 11/1/05	FINAL PS & E
STATE PROJECT NUMBER: 1002-02-72	HWY: I-39/90	COUNTY: DANE	MADISON SAFETY & WEIGHT FACILITY NO. 16	SCALE, FEET 0	SHEET NO: OF	DWG. E602 73

LEGEND:

- L – INDUCTIVE LOOP
- P – PIEZOELECTRIC SENSOR
- O/H – OVERHEIGHT DETECTOR/EMITTER
- A – AVI MAST ARM/AVI ANTENNA
- LDS – LANE DIRECTIONAL SIGNAL
- C – CAMERA
- S – SINGLE LOAD CELL SCALE
- LCS – LANE CONTROL SIGNAL
- CMS – CHANGEABLE MESSAGE SIGN
- TS – TRAFFIC SIGNAL
- [1] – SIGNAL CONDUIT
- ⟨1⟩ – POWER CONDUIT

LOOP DETAILS:

LOOP #	SIZE	NUMBER OF TURNS
L1–L4	6' x 6'	4
L5–L7	8' x 8'	7
L8–L13	6' x 6'	4
L14	6' x 6'	6
L15	6' x 16'	6
L16–L17	6' x 6'	7
L18–L19	6' x 6'	4

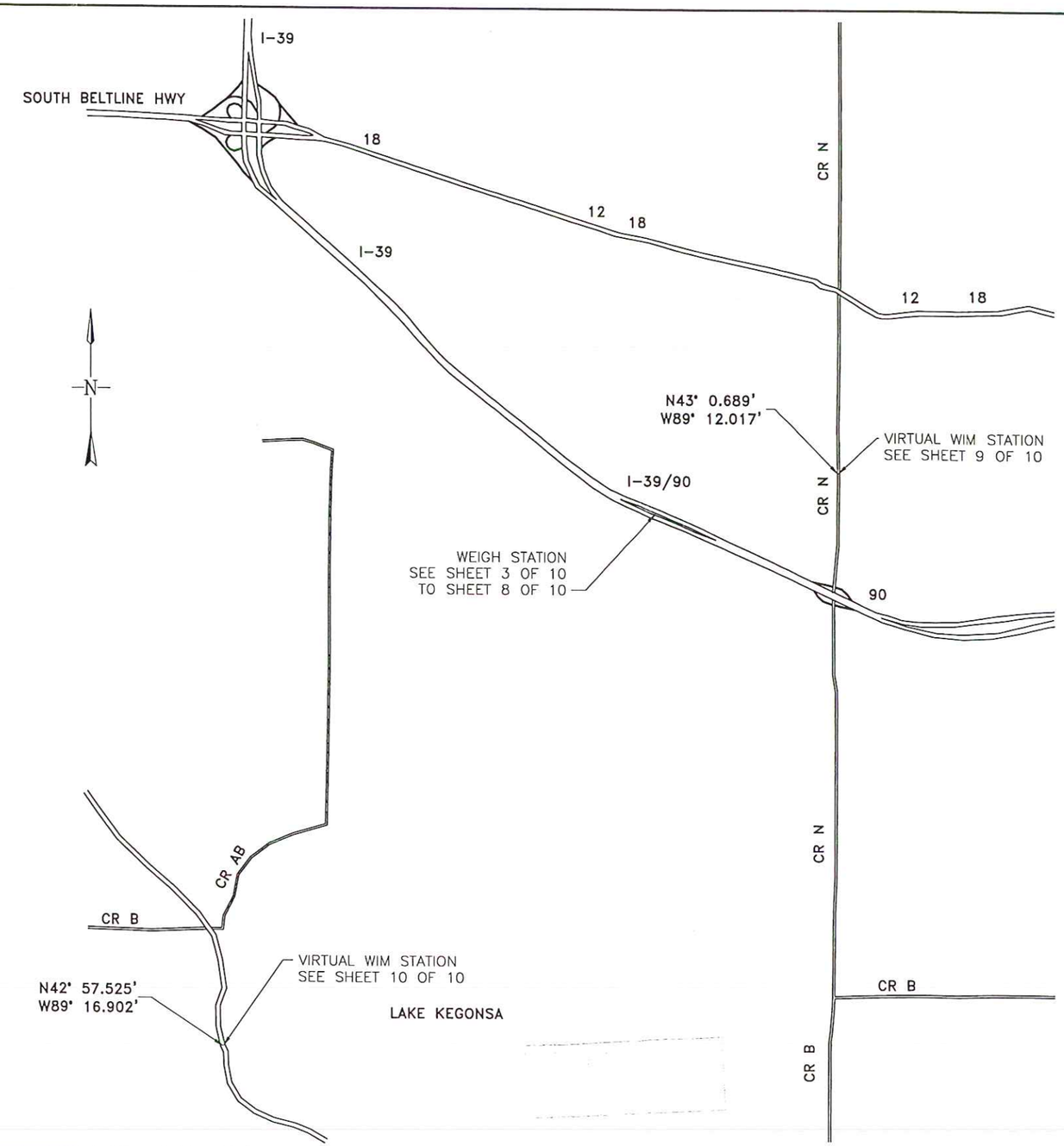

GENERAL NOTES:

ALL CONNECTIONS BETWEEN SENSORS AND LEAD CABLES ARE DONE IN PULL BOX AND ARE SOLDERED THEN SEALED FOR WATERPROOFING. NUMBER AND PLACEMENT OF PULL BOXES NOT SHOWN.

POWER CABLES MUST BE RUN IN SEPARATE CONDUITS/PULLBOXES FROM SIGNAL CABLES.

SENSOR SPACING SHOWN IS TYPICAL SPACING REQUIREMENT, ACTUAL SENSOR SPACING MAY BE ALTERED TO SUIT SITE CONDITIONS BY THE IRD FIELD REPRESENTATIVE.

ROAD SURFACE MUST MEET IRD SPECIFICATIONS FOR PAVEMENT CONDITIONS TO ACHIEVE OPTIMAL SYSTEM PERFORMANCE.

CABLES MUST BE PROTECTED BY PVC SLEEVES WHERE THEY CROSS PAVEMENT JOINTS/CRACKS.

PIEZO SENSORS MUST BE A MINIMUM OF 6' [1.83m] AWAY FROM CRACKS, JOINTS OR SAWCUTS WHEN POSSIBLE.

ADDITIONAL DRAINAGE MAY BE REQUIRED DEPENDING ON SLOPE OF ROADWAY. DRAINAGE CONSISTS OF 1–1/2" ABS PIPE SLOPED TO RIP RAP DRAINAGE PIT IN DITCH.

IRD RECOMMENDS THAT PULL BOXES BE NO FURTHER THAN 200' [61m] APART. IRD RECOMMENDS THE MINIMUM SIZE FOR PULL BOXES IS 18" [45.7cm] X 18" [45.7cm] X 12" [30.5cm].

EXACT ROUTING OF CONDUIT TO BE DETERMINED ON SITE. CONDUITS ARE LABELED LEFT TO RIGHT, TOP TO BOTTOM.

SEE 81300907 FOR CABINET POWER REQUIREMENTS.

DRAWING NOT TO SCALE.

REV.	DESCRIPTION	DWN/DSN	APPR.	APPR.	DATE
A	INITIAL RELEASE	JGi/RCz	GDo	DBo	AUG 22/06
B	REDLINES FROM AUG 30TH SITE TRIP WHERE SENSOR LOCATIONS WERE MARKED FOR CONSTRUCTION. ECO-01.	JGi/RSc	GDo	RSc	SEP 13/06

ird®

NOT TO SCALE

SIZE: B

DIMENSIONS IN: FEET [m]

INTERNATIONAL ROAD DYNAMICS INC.
SASKATOON SASKATCHEWAN CANADA

DWG. TITLE:
SITE LAYOUT
WIM/PRE-PASS/STATIC SCALE SYSTEM
MADISON, WISCONSIN

DWG. No. C10744001

REV.: B 74

CAD FILE: C10744001.DWG

SHEET 1 OF 10

SIGNAL CONDUITS:

[1] 1" CONDUIT
1-2C 14AWG (LOOP LEAD)

[2] 1" CONDUIT
1- RG58 COAXIAL CABLE (PIEZO LEAD)

[3] 2" CONDUIT
SPARE

[4] 2" CONDUIT
STUB OUT FOR PREPASS

[5] 2" CONDUIT
1-12 STRAND MULTIMODE FIBER OPTIC CABLE (CAMERA)

[6] 2" CONDUIT
2-2C 14AWG (LOOP LEAD)

[7] 2" CONDUIT
3-2C 14AWG (LOOP LEAD)

[8] 2" CONDUIT
1-12 STRAND MULTIMODE FIBER OPTIC CABLE (COM)

[9] SPARE

[10] 2" CONDUIT
4-2C 14AWG (LOOP LEAD)

[11] 2" CONDUIT
2-3PR 20AWG (SLC LEAD S1-S2)
4-2C 18AWG (OFF-SCALE LEAD)
1- RG58 COAXIAL CABLE (PIEZO LEAD)
2-2C 14AWG (LOOP LEAD)
1-12 STRAND MULTIMODE FIBER OPTIC CABLE (CAMERA)

[12] 2" CONDUIT
2-2C 14AWG (LOOP LEAD)
2- RG58 COAXIAL CABLE (PIEZO LEAD)

[13] 2" CONDUIT
1- TBD (AVI COM)

[14] 2" CONDUIT
4-2C 14AWG (LOOP LEAD)
3- RG58 COAXIAL CABLE (PIEZO LEAD)
1-3PR 20AWG (SLC LEAD)
4-2C 18AWG (OFF-SCALE LEAD)

[15] 2" CONDUIT
5-2C 14AWG (LOOP LEAD)

[16] 2" CONDUIT
4-2C 14AWG (LOOP LEAD)
4- RG58 COAXIAL CABLE (PIEZO LEAD)

[17] 2" CONDUIT
10-2C 14AWG (LOOP LEAD)
5- RG58 COAXIAL CABLE (PIEZO LEAD)

[18] 1" CONDUIT
1-2C 18AWG (O/H SIGNAL)

[19] 2" CONDUIT
2-3PR 20AWG (SLC LEAD S1-S2)
4-2C 18AWG (OFF-SCALE LEAD)

[20] SPARE

[21] 2-1/2" CONDUIT
2-3PR 20AWG (SLC LEAD S1-S2)
4-2C 18AWG (OFF-SCALE LEAD)
4-2C 18AWG (LOOP LEAD)
3- RG58 COAXIAL CABLE (PIEZO LEAD)

[22] 2" CONDUIT
2-12 STRAND MULTIMODE FIBER OPTIC CABLE (CMS)

[23] 1-1/2" CONDUIT
1-4 STRAND FIBER OPTIC CABLE (CAMERA)

POWER CONDUITS:

(1) 2" CONDUIT
1-2C + GND 12AWG (O/H)

(2) 2" CONDUIT
2-4C + GND 12AWG (CMS1 AND 2 POWER AND SIGNAL)

(3) 2" CONDUIT
1-2C + GND 10AWG (CAMERA AND ILLUMINATOR POWER)

(4) 2" CONDUIT
1-4C + GND 12AWG (CMS POWER - SUPPLIED BY OTHERS)

(5) 2" CONDUIT
2-2C + GND 12AWG (O/H)

(6) 2" CONDUIT
TBD (RAMP CABINET)

(7) 2" CONDUIT
2-3C + GND (LCS POWER)

(8) 2" CONDUIT
TBD (MAINLINE CABINET POWER)

REV.	DESCRIPTION	DWN/DSN	APPR.	APPR.	DATE
A	INITIAL RELEASE	JGI/RCz	GDo	DBo	AUG 22/06
B	REDLINES FROM AUG 30TH SITE TRIP WHERE SENSOR LOCATIONS WERE MARKED FOR CONSTRUCTION. ECO-01.	JGI/RSc	GDo	RSc	SEP 13/06

NOT TO SCALE

SIZE: B

DIMENSIONS IN: FEET [m]

INTERNATIONAL ROAD DYNAMICS INC.
SASKATOON SASKATCHEWAN CANADA

DWG. TITLE:
SITE LAYOUT
WIM/PRE-PASS/STATIC SCALE SYSTEM
MADISON, WISCONSIN

DWG. No. C10744001

REV.: B 75

CAD FILE: C10744001.DWG

SHEET 2 OF 10

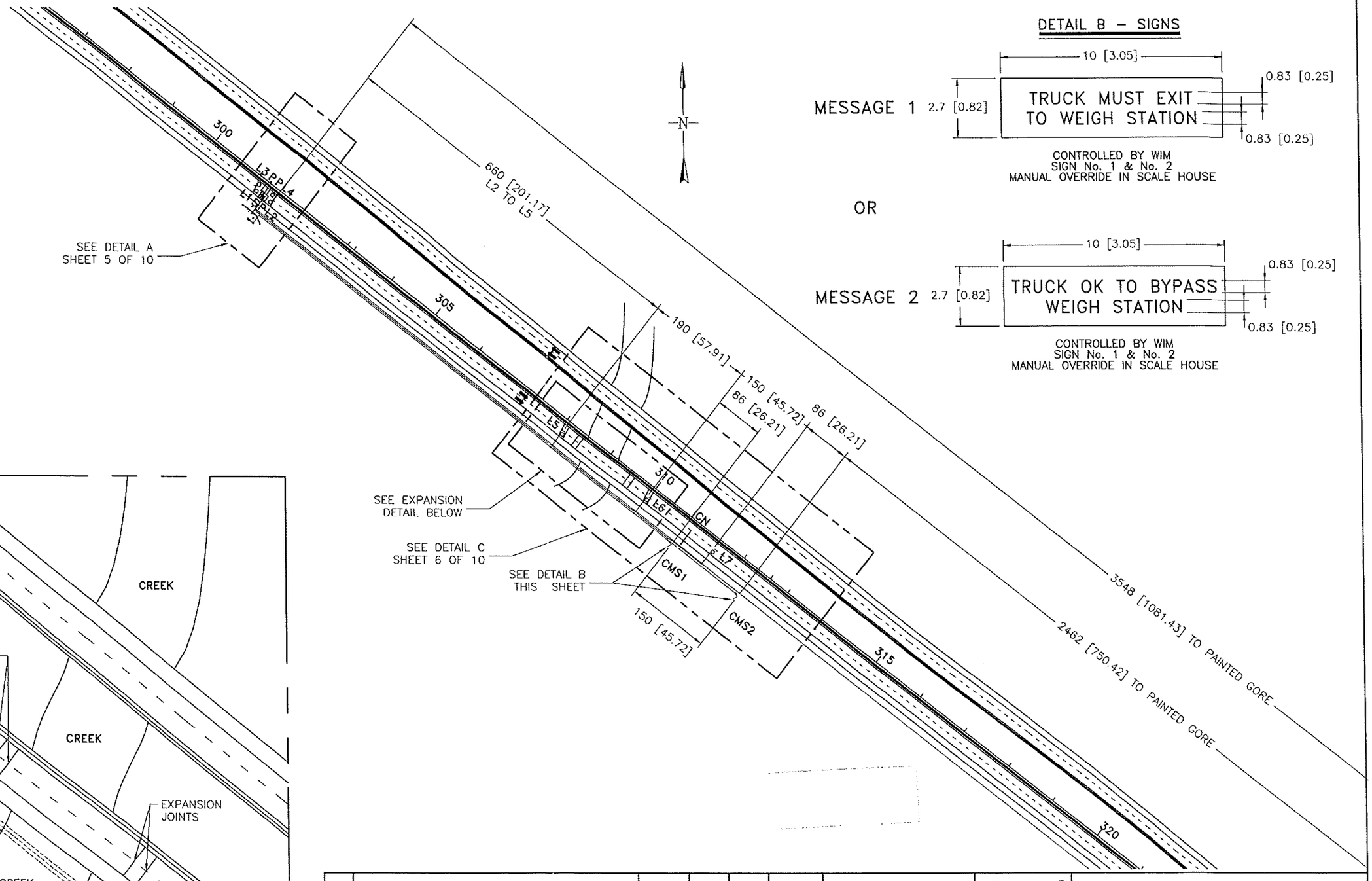

DETAIL B – SIGNS

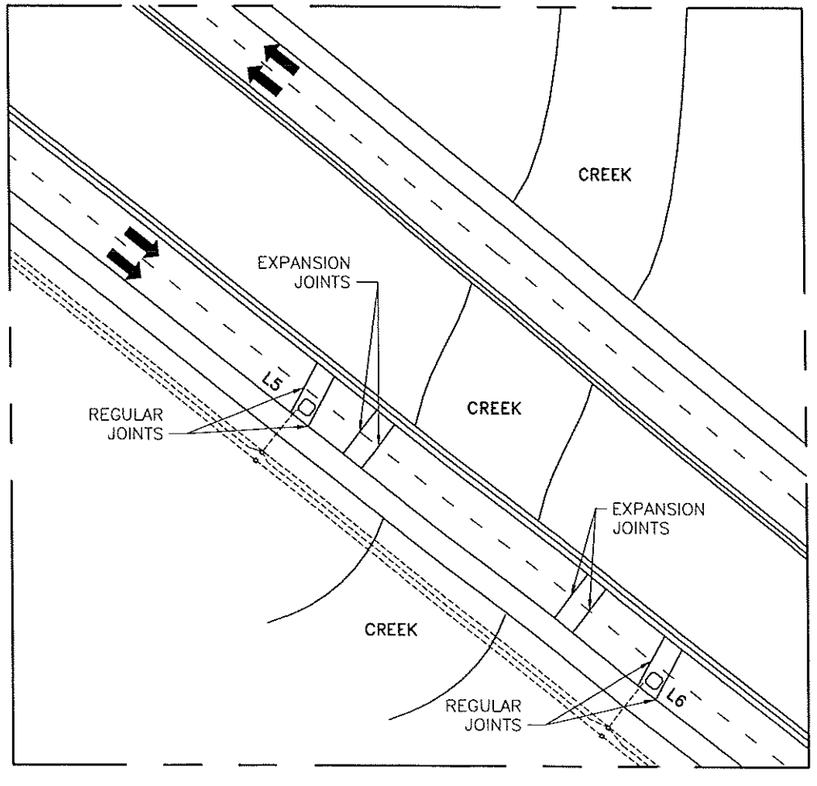

REV.	DESCRIPTION	DWN/DSN	APPR.	APPR.	DATE
A	INITIAL RELEASE	JGi/RCz	GDo	DBo	AUG 22/06
B	REDLINES FROM AUG 30TH SITE TRIP WHERE SENSOR LOCATIONS WERE MARKED FOR CONSTRUCTION. ECO-01.	JGi/RSc	GDo	RSc	SEP 13/06

NOT TO SCALE

SIZE: B

DIMENSIONS IN: FEET [m]

INTERNATIONAL ROAD DYNAMICS INC.
SASKATOON SASKATCHEWAN CANADA

DWG. TITLE:
SITE LAYOUT
WIM/PRE-PASS/STATIC SCALE SYSTEM
MADISON, WISCONSIN

DWG. No. C10744001

REV.: B 76

CAD FILE: C10744001.DWG

SHEET 3 OF 10

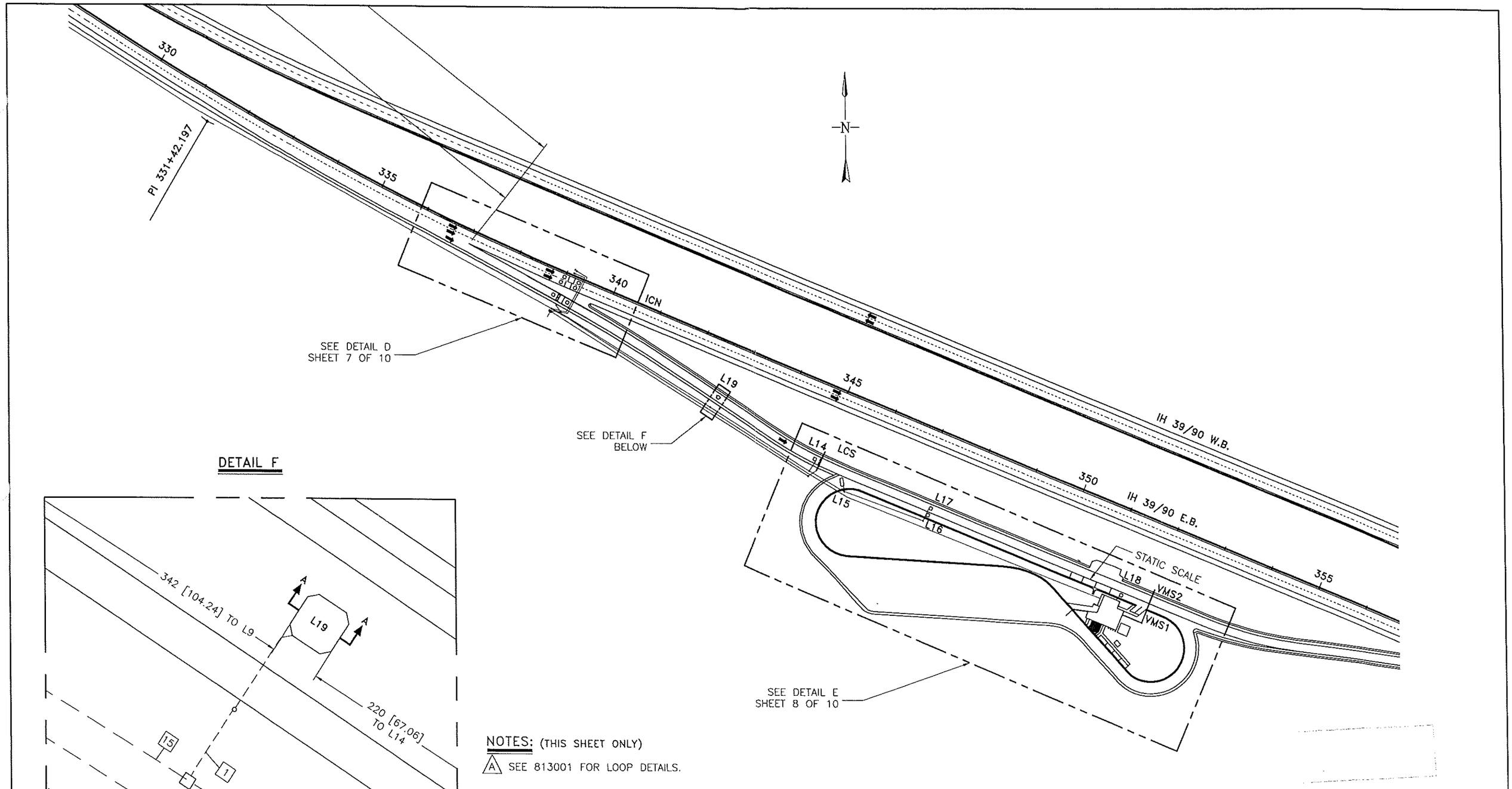

NOTES: (THIS SHEET ONLY)

A SEE 813001 FOR LOOP DETAILS.

REV.	DESCRIPTION	DWN/DSN	APPR.	APPR.	DATE
A	INITIAL RELEASE	JGi/RCz	GDo	DBo	AUG 22/06
B	REDLINES FROM AUG 30TH SITE TRIP WHERE SENSOR LOCATIONS WERE MARKED FOR CONSTRUCTION. ECO-01.	JGi/RSc	GDo	RSc	SEP 13/06

NOT TO SCALE

SIZE: B

DIMENSIONS IN: FEET [m]

INTERNATIONAL ROAD DYNAMICS INC.
SASKATOON SASKATCHEWAN CANADA

DWG. TITLE:
SITE LAYOUT
WIM/PRE-PASS/STATIC SCALE SYSTEM
MADISON, WISCONSIN

DWG. No. C10744001

REV.: B

CAD FILE: C10744001.DWG

DETAIL A

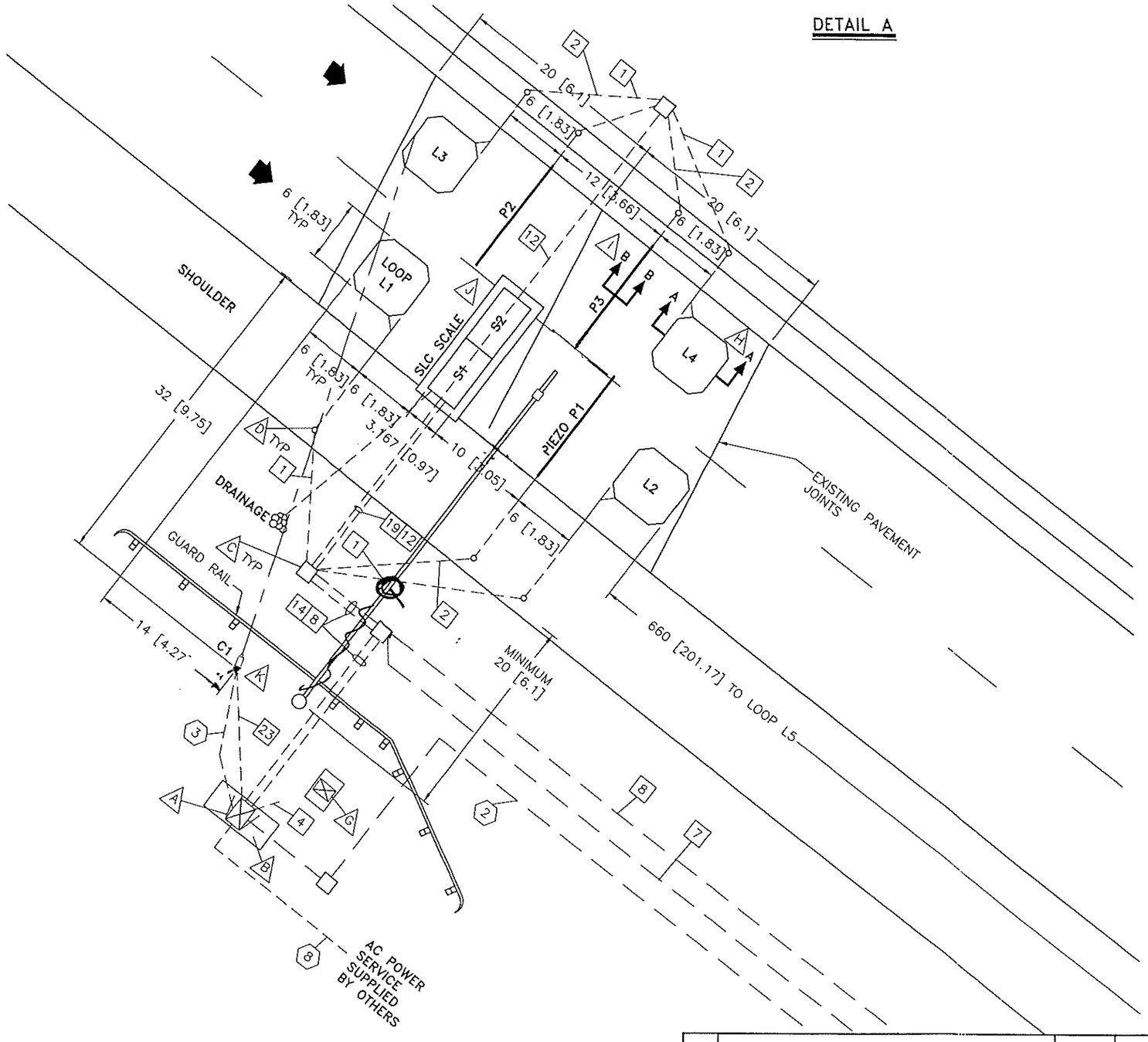

NOTES: (THIS SHEET ONLY)

- (A) CABINET WITH WIM ELECTRONICS.
- (B) CABINET BASE.
- (C) PULL BOX.
- (D) DRILL THROUGH SHOULDER FOR CONDUIT.
- E CABINET IS PLACED SO THAT THE BACK OF THE CABINET IS FACING THE ROAD.
- F POWER CONDUITS EXIT THE CABINET ON THE SIDE CONSIDERED LEFT WHEN FACING THE CABINET DOOR.
- (G) CABINET, BASE, CORRESPONDING CONDUIT, AND ELECTRONICS FOR THE AVI TO BE SUPPLIED BY PRE-PASS.
- (H) SEE 813001 FOR LOOP DETAILS.
- (I) SEE 813002 FOR PIEZO DETAILS.
- (J) SEE 813008 FOR SLC DETAILS.
- (K) SEE 813021 FOR CAMERA DETAILS.

REV.	DESCRIPTION	DWN/DSN	APPR.	APPR.	DATE
A	INITIAL RELEASE	JGi/RCz	GDo	DBo	AUG 22/06
B	REDLINES FROM AUG 30TH SITE TRIP WHERE SENSOR LOCATIONS WERE MARKED FOR CONSTRUCTION. ECO-01.	JGi/RSc	GDo	RSc	SEP 13/06

NOT TO SCALE

SIZE: B

DIMENSIONS IN: FEET [m]

INTERNATIONAL ROAD DYNAMICS INC.
SASKATOON SASKATCHEWAN CANADA

DWG. TITLE:
SITE LAYOUT
WIM/PRE-PASS/STATIC SCALE SYSTEM
MADISON, WISCONSIN

DWG. No. C10744001

REV.: B 78

CAD FILE: C10744001.DWG

SHEET 5 OF 10

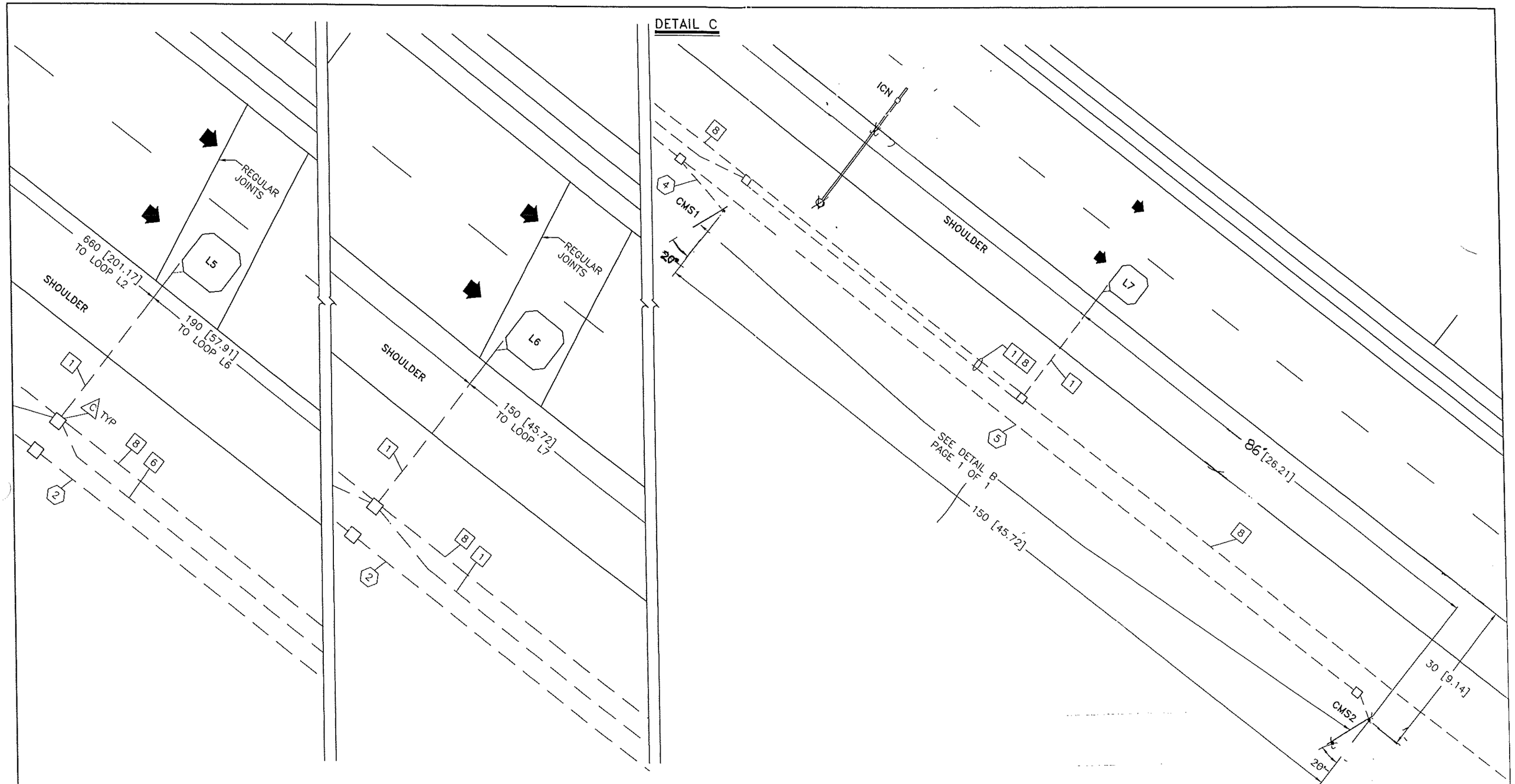

NOTES: (THIS SHEET ONLY)

A PULL BOX.

REV.	DESCRIPTION	DWN/DSN	APPR.	APPR.	DATE
A	INITIAL RELEASE	JGi/RCz	GDo	DBo	AUG 22/06
B	REDLINES FROM AUG 30TH SITE TRIP WHERE SENSOR LOCATIONS WERE MARKED FOR CONSTRUCTION. ECO-01.	JGi/RSc	GDo	RSc	SEP 13/06

ird®

NOT TO SCALE

SIZE: B

DIMENSIONS IN: FEET [m]

INTERNATIONAL ROAD DYNAMICS INC.
SASKATOON SASKATCHEWAN CANADA

DWG. TITLE:
SITE LAYOUT
WIM/PRE-PASS/STATIC SCALE SYSTEM
MADISON, WISCONSIN

DWG. No. C10744001

REV.: B

CAD FILE: C10744001.DWG

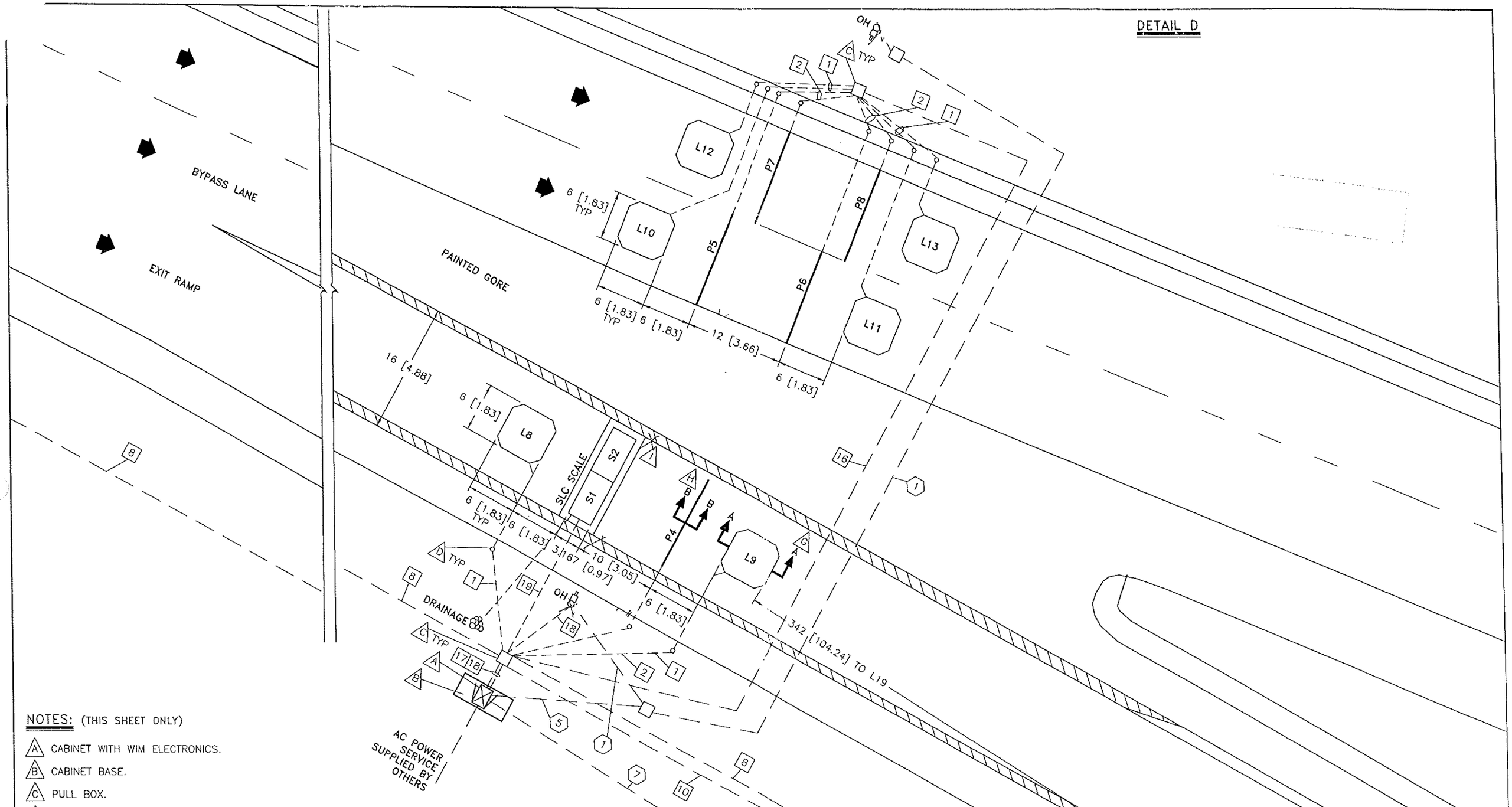

NOTES: (THIS SHEET ONLY)

- A CABINET WITH WIM ELECTRONICS.
- B CABINET BASE.
- C PULL BOX.
- D DRILL THROUGH SHOULDER FOR CONDUIT.
- E CABINET IS PLACED SO THAT THE BACK OF THE CABINET IS FACING THE ROAD.
- F POWER CONDUITS EXIT THE CABINET ON THE SIDE CONSIDERED LEFT WHEN FACING THE CABINET DOOR.
- G SEE 813001 FOR LOOP DETAILS.
- H SEE 813002 FOR PIEZO DETAILS.
- I SEE 813008 FOR SLC DETAILS.

REV.	DESCRIPTION	DWN/DSN	APPR.	APPR.	DATE
A	INITIAL RELEASE	JGi/RCz	GDo	DBo	AUG 22/06
B	REDLINES FROM AUG 30TH SITE TRIP WHERE SENSOR LOCATIONS WERE MARKED FOR CONSTRUCTION. ECO-01.	JGi/RSc	GDo	RSc	SEP 13/06

NOT TO SCALE

SIZE: B

DIMENSIONS IN: FEET [m]

INTERNATIONAL ROAD DYNAMICS INC.
SASKATOON SASKATCHEWAN CANADA

DWG. TITLE:
SITE LAYOUT
WIM/PRE-PASS/STATIC SCALE SYSTEM
MADISON, WISCONSIN

DWG. No. C10744001

REV.: B 80

CAD FILE: C10744001.DWG

SHEET 7 OF 10

DETAIL E

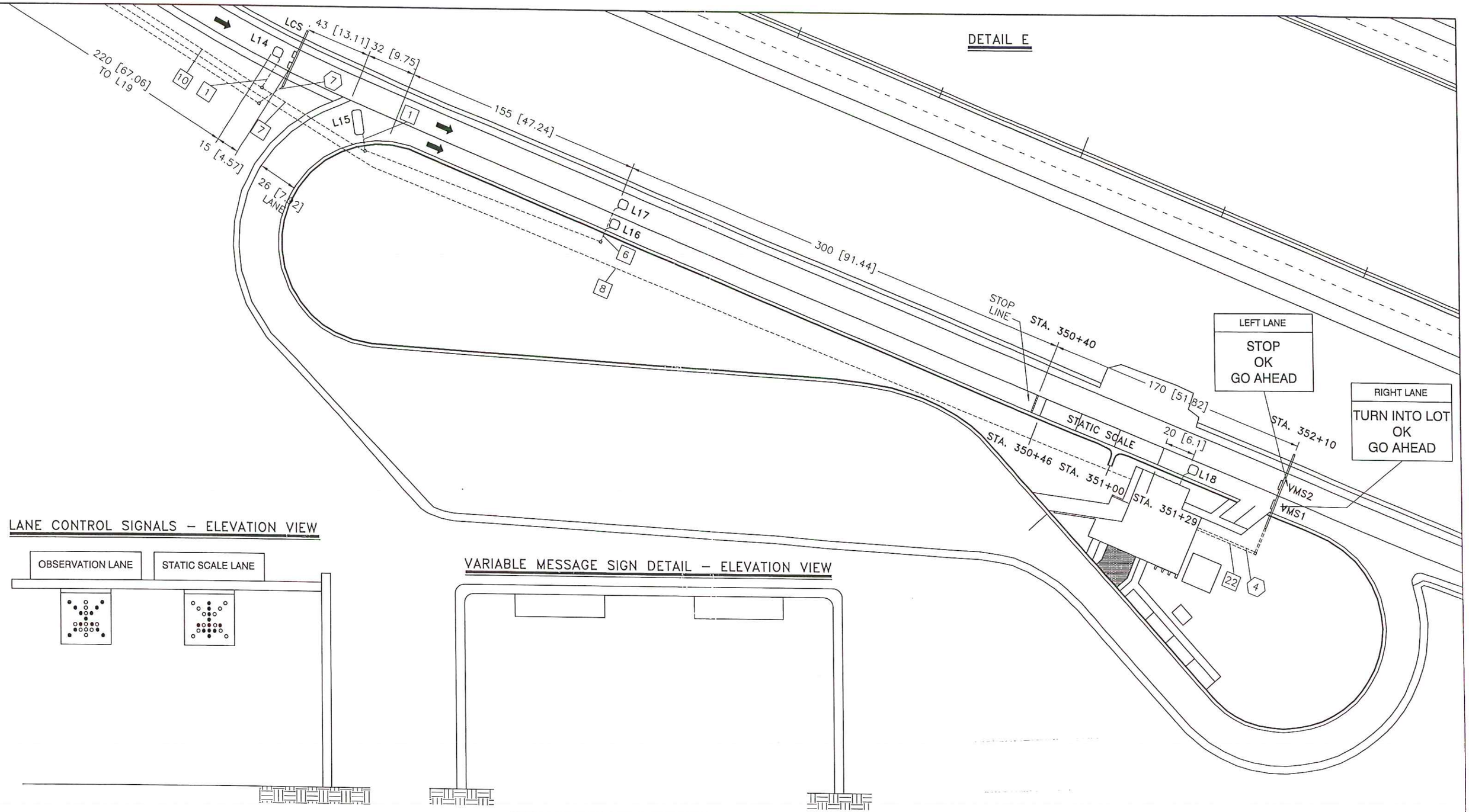

LANE CONTROL SIGNALS – ELEVATION VIEW

VARIABLE MESSAGE SIGN DETAIL – ELEVATION VIEW

REV.	DESCRIPTION	DWN/DSN	APPR.	APPR.	DATE
A	INITIAL RELEASE	JGi/RCz	GDo	DBo	AUG 22/06
B	REDLINES FROM AUG 30TH SITE TRIP WHERE SENSOR LOCATIONS WERE MARKED FOR CONSTRUCTION. ECO-01.	JGi/RSc	GDo	RSc	SEP 13/06

ird®

NOT TO SCALE

SIZE: B

DIMENSIONS IN: FEET [m]

INTERNATIONAL ROAD DYNAMICS INC.
SASKATOON SASKATCHEWAN CANADA

DWG. TITLE:
SITE LAYOUT
WIM/PRE-PASS/STATIC SCALE SYSTEM
MADISON, WISCONSIN

DWG. No. C10744001

REV.: B 81

CAD FILE: C10744001.DWG

SHEET 8 OF 10

VIRTUAL WEIGH STATION CR N DETAIL

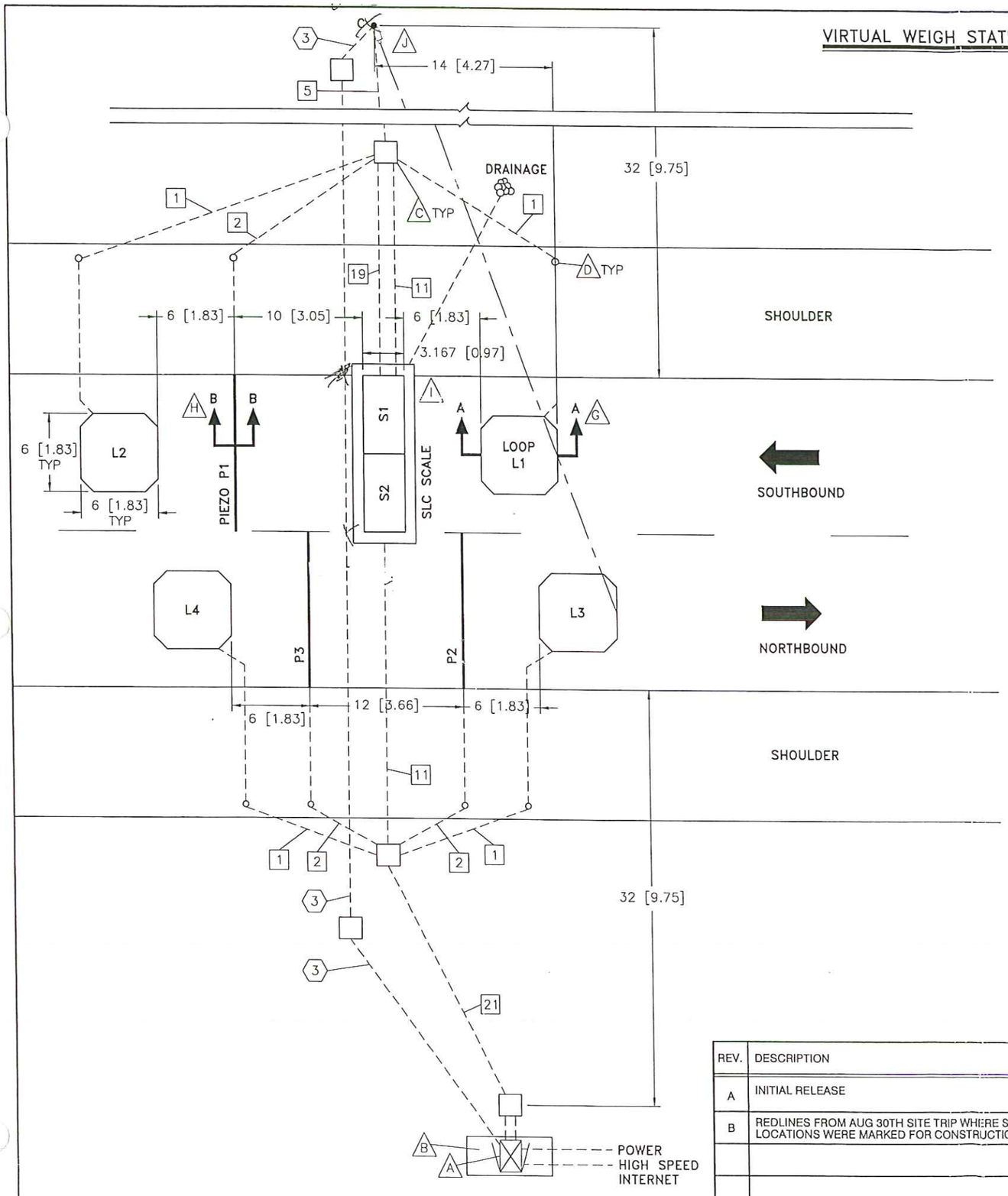

LOOP DETAILS: (THIS SHEET ONLY)

LOOP #	SIZE	NUMBER OF TURNS
L1–L4	6' x 6'	4

NOTES: (THIS SHEET ONLY)

A CABINET WITH WIM ELECTRONICS.

B CABINET BASE.

C PULL BOX.

D DRILL THROUGH SHOULDER FOR CONDUIT.

E CABINET IS PLACED SO THAT THE BACK OF THE CABINET IS FACING THE ROAD.

F POWER CONDUITS EXIT THE CABINET ON THE SIDE CONSIDERED LEFT WHEN FACING THE CABINET DOOR.

G SEE 813001 FOR LOOP DETAILS.

H SEE 813002 FOR PIEZO DETAILS.

I SEE 813008 FOR SLC DETAILS.

J SEE 813021 FOR CAMERA DETAILS.

NOTES: (THIS SHEET ONLY)

THE SLC SCALE LANE IS TO BE INSTALLED IN THE SOUTHBOUND DIRECTION OF TRAVEL.

THE PIEZO LANE IS TO BE INSTALLED IN THE NORTHBOUND DIRECTION OF TRAVEL.

THE PIEZO LANE WILL HAVE THE ABILITY TO DETECT AND CLASSIFY VEHICLES TRAVELING NORTHBOUND.

THE PIEZO LANE WILL ALSO HAVE THE ABILITY TO DETECT TRUCK TRAFFIC TRAVELING SOUTHBOUND ATTEMPTING TO BYPASS THE SLC SCALE LANE.

IF A TRUCK TRIES TO BYPASS THE SLC SCALE LANE BY TRAVELING IN THE PIEZO LANE A PHOTO OF THIS VEHICLE WILL BE TAKEN AND AN ALERT WILL BE SENT TO THE WEIGH STATION.

REV.	DESCRIPTION	DWN/DSN	APPR.	APPR.	DATE
A	INITIAL RELEASE	JGi/RCz	GDo	DBo	AUG 22/06
B	REDLINES FROM AUG 30TH SITE TRIP WHERE SENSOR LOCATIONS WERE MARKED FOR CONSTRUCTION. ECO-01.	JGi/RSc	GDo	RSc	SEP 13/06

NOT TO SCALE

SIZE: B

DIMENSIONS IN: FEET [m]

INTERNATIONAL ROAD DYNAMICS INC.
SASKATOON SASKATCHEWAN CANADA

DWG. TITLE:
SITE LAYOUT
WIM/PRE-PASS/STATIC SCALE SYSTEM
MADISON, WISCONSIN

DWG. No. C10744001

REV.: B 82

CAD FILE: C10744001.DWG

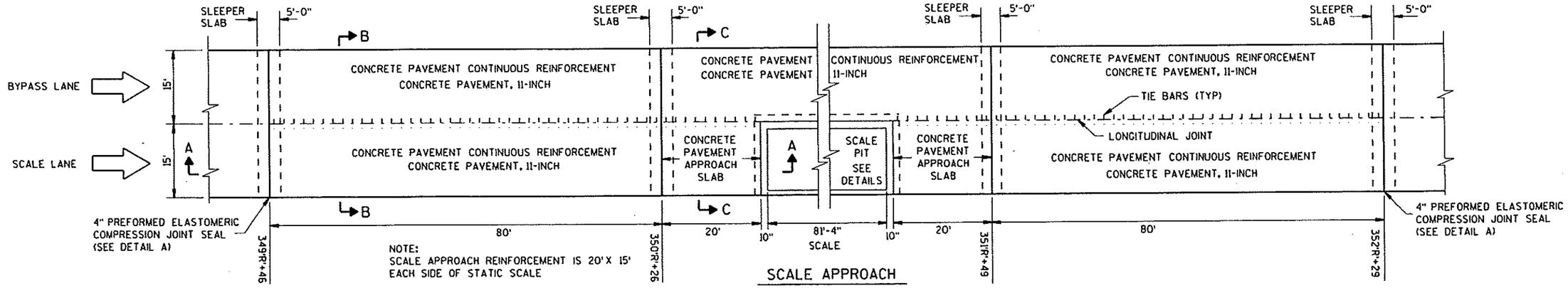

SCALE APPROACH

PLAN VIEW

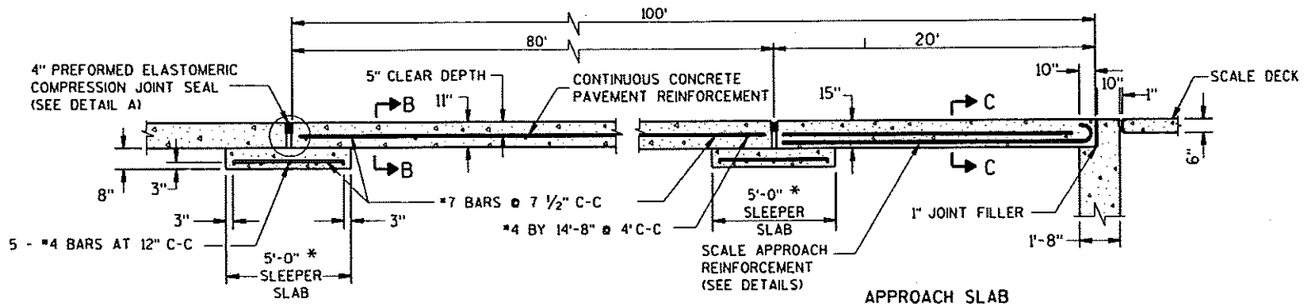

TRANSITION DETAIL

APPROACH SLAB

SECTION A-A

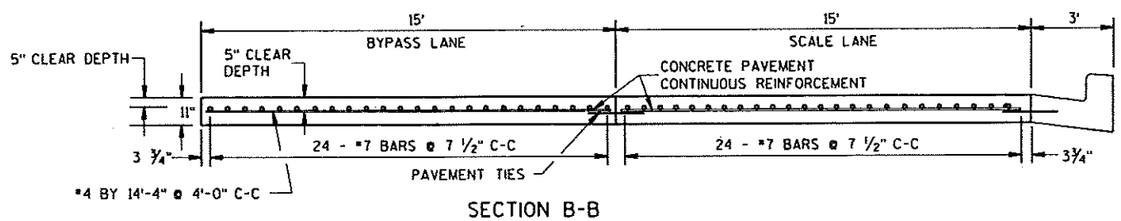

SECTION B-B

CONTINUOUS REINFORCED CONCRETE APPROACH AND BYPASS LANE

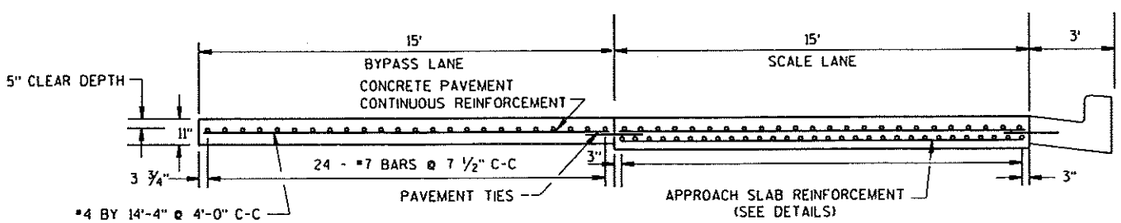

SECTION C-C

SCALE PIT APPROACH AND BYPASS LANE

GENERAL NOTES

DETAILS OF CONSTRUCTION NOT SHOWN ON THIS DRAWING SHALL CONFORM TO THE STANDARD SPECIFICATIONS AND SPECIAL PROVISIONS.

JOINT FILLER

EXPANSION JOINT FILLER BETWEEN APPROACH SLAB AND ROADWAY PAVEMENT AT THE SLEEPER SLAB IS A 4-INCH PREFORMED ELASTOMERIC COMPRESSION SEAL. EXPANSION JOINT FILLER BETWEEN APPROACH SLAB AND SCALE PIT IS 1-INCH.

STEEL REINFORCEMENT

SPLICING OF NO. 7 BARS IN THE APPROACH SLAB IS PERMITTED. SPLICES SHALL BE STAGGERED, WITH A MAXIMUM OF ONE SPLICE PER BAR. LAPS SHALL CONFORM TO THE STANDARD SPECIFICATIONS. REINFORCEMENT BARS SHALL BE EPOXY COATED IN CONFORMANCE WITH SUBSECTION 505.2.4 OF THE STANDARD SPECIFICATIONS.

QUANTITIES

SCALE LANE & BYPASS LANE	
** CONCRETE PAVEMENT, 11-INCH	738 S.Y.
** CONCRETE PAVEMENT CONTINUOUS REINFORCEMENT (29,445 LBS.)	738 S.Y.
** CONCRETE PAVEMENT APPROACH SLAB (1800 LBS.)	67 S.Y.
*SLEEPER SLAB	
CONCRETE PAVEMENT, 8-INCH	67 S.Y.
SLEEPER SLAB REINFORCEMENT (2,690 LBS.)	67 S.Y.

* SLEEPER SLAB COST INCIDENTAL TO CONCRETE PAVEMENT 11-INCH.

** QUANTITIES SUMMARIZED IN MISCELLANEOUS QUANTITIES SHEET.

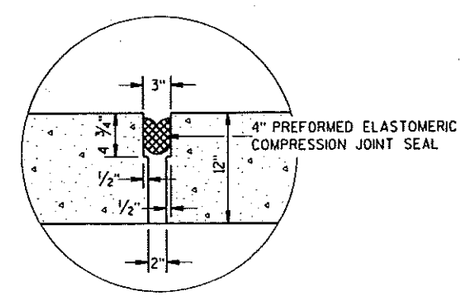

DETAIL A

STATE PROJECT NUMBER: 1002-02-72	HWY: IH 39/90	COUNTY: DANE	SCALE PIT APPROACHES & BYPASS LANE	SCALE:	SHEET NO: 83	E

APPROX. EXCAVATION QTY = 617 CU. YDS [471.85 CM]
(BASED ON 2'-0" [609.6] CLEARANCE AROUND SIDE OF PIT.)

PLAN VIEW

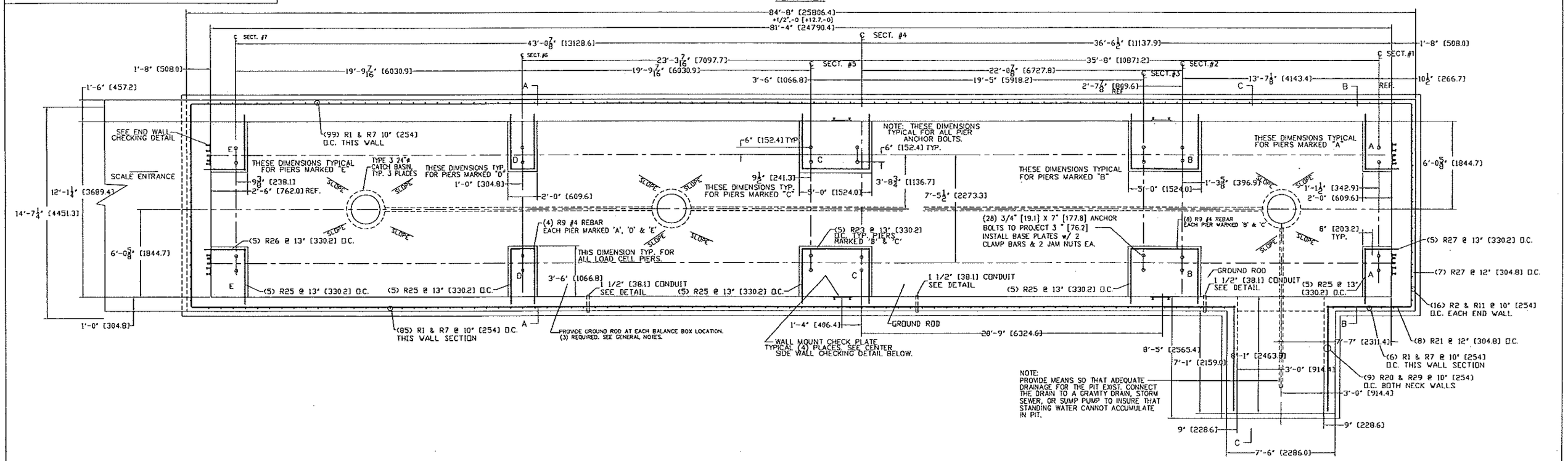

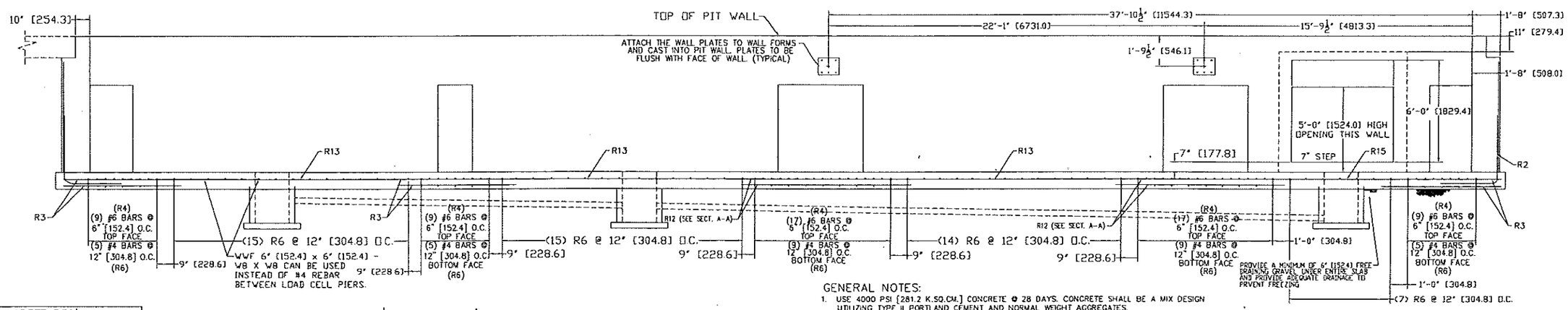

APPROX. CONCRETE REQ'D.		
SLAB/PIERS	57.69 CU. YDS.	[44.1 CM]
WALLS	75.78 CU. YDS.	[57.9 CM]
APPROACHES	27.00 CU. YDS.	[20.7 CM]
SLEEPER SLAB	3.61 CU. YDS.	[2.76 CM]
TOTAL	164.08 CU. YDS.	[125.46 CM]

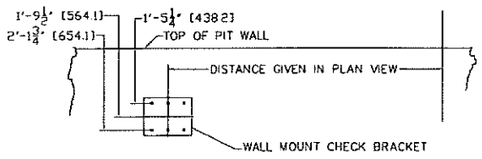

CENTER SIDE WALL CHECKING DETAIL

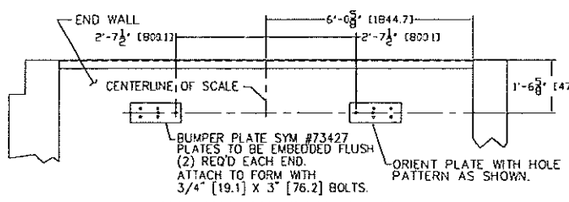

END WALL CHECKING DETAIL
TYPICAL FOR EACH END WALL

GENERAL NOTES:

1. USE 4000 PSI [281.2 K.SQ.CM.] CONCRETE @ 28 DAYS. CONCRETE SHALL BE A MIX DESIGN UTILIZING TYPE II PORTLAND CEMENT AND NORMAL WEIGHT AGGREGATES. NO FLY ASH WILL BE ALLOWED. MAXIMUM ALLOWABLE SLUMP SHALL BE 4 1/2" [114.3] CONCRETE TO BE MECHANICALLY VIBRATED TO INSURE PROPER CONSOLIDATION. USE 5-7% AIR ENTRAINMENT.
2. USE A MIX DESIGN WHICH WILL DEVELOP 4000 PSI [281.2 K. SQ. CM] STRENGTH IN 7 DAYS ON THE APROACHES.
3. REINFORCING BARS ARE TO EQUAL ASTM A615, GRADE 60. BEND BARS COLD TO CONFORM WITH REQUIRED DETAILS. REMOVE SCALE, LOOSE FLAKEY RUST, DIRT, AND OTHER COATING THAT WOULD IMPAIR BONDING. SPACE BARS PROPERLY AND TIE SECURELY IN POSITION BEFORE PLACING CONCRETE. TACK WELDING TO KEEP REINFORCING IN PLACE IS NOT PERMITTED.
4. ALL CONCRETE SURFACES SHALL BE FORMED WITH WOOD OR METAL FORMS USING APPROVED METHODS. NO CONCRETE VERTICAL SURFACES SHALL BE POURED AGAINST DIRT.
5. MAKE 3 CONCRETE TEST CYLINDERS. LABLE WITH POUR DATE AND DESCRIPTION OF POUR. WRAP CYLINDERS IN 6 MIL POLY.
6. WORK FROM CENTERLINES WHEN ERECTING FORMS AND PLACING FOUNDATION EMBEDMENTS. PLACE EMBEDMENTS TO WITHIN ±1/8" [3.175] OF POSITIONS INDICTED ON DRAWING. (EMBEDMENTS MUST BE PLACED WITHIN ±1/8" [3.175] OF TOTAL DIMENSIONS FROM CENTERLINE OF SCALE.)
7. FOR SETTING PLAN, SEE DRAWING DMM74752-SP.
8. BOTTOM OF PIT SHOULD BE SUPPORTED ON NON-EXPANSIVE WELL DRAINED MATERIAL CAPABLE OF SAFELY SUPPORTING 1000 PSF [4882.4 K.SQ.M.].
9. SUITABLE CONDUIT FOR LOW VOLTAGE CONDUCTOR SHIELDED CABLE MUST PASS THRU THE PIT WALL AS INDICATED ON THIS DRAWING. CONDUIT MUST EXTEND BEYOND PIT WALL A MINIMUM OF 2" [50.8].
10. ALL BACK FILL SHOULD BE PLACED IN 8" [203.2] LIFTS & COMPACTED TO 95% OF MAXIMUM DENSITY PER ASTM 1557. ALL WORK TO BE IN ACCORDANCE WITH AO 301.
11. PROVIDE MEANS SO THAT ADEQUATE DRAINAGE FOR THE PIT EXIST. CONNECT THE DRAIN TO A GRAVITY DRAIN, STORM SEWER, OR SUMP PUMP TO INSURE THAT STANDING WATER CANNOT ACCUMULATE IN PIT.

STATE PROJECT NUMBER: 1002-02-72 HWY: I-39/90 COUNTY: DANE MADISON SAFETY & WEIGHT FACILITY NO. 16	DATE 2/23/06 SCALE: NONE	SHEET 1 OF 2 DWG: MM84727-RPM 84

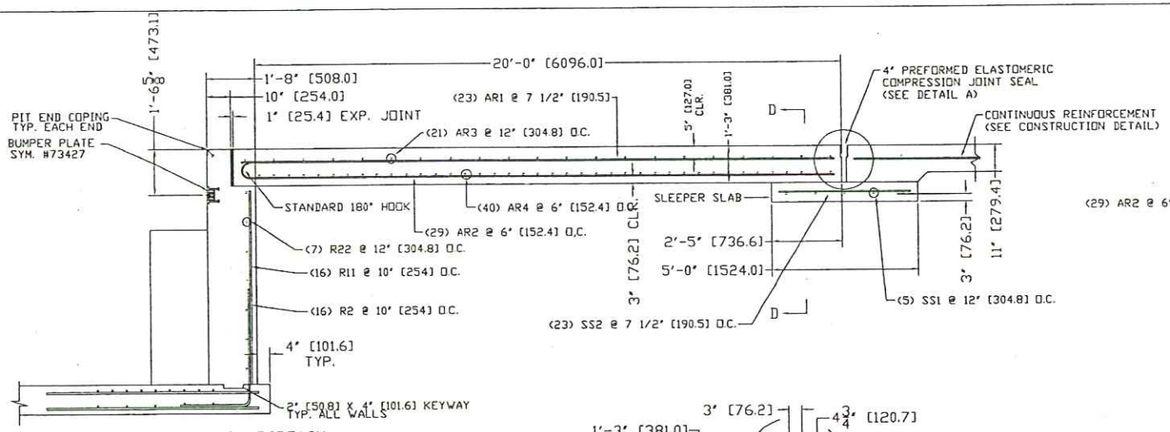

END WALL AND APPROACH
TYPICAL EACH END

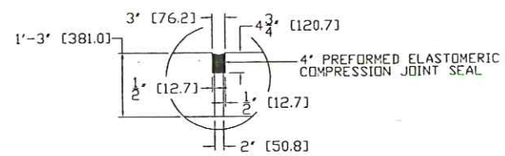

DETAIL A

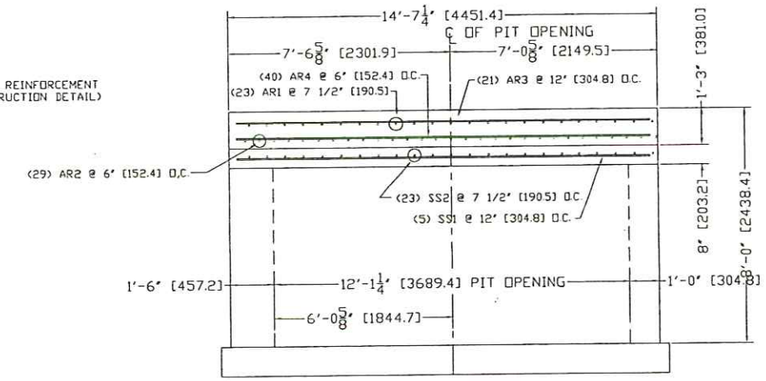

APPROACH/SLEEPER SLAP SECT 'D' - 'D'

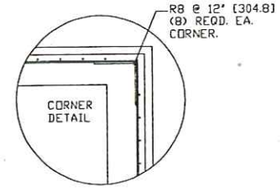

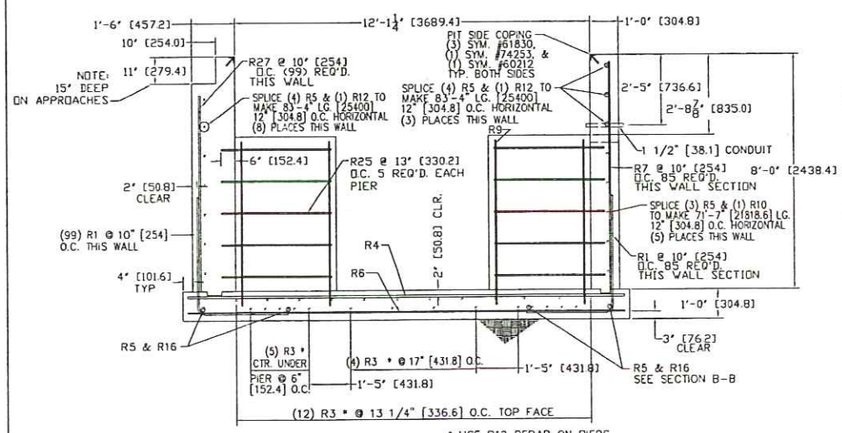

SECTION A-A
TYPICAL (3) PLACES
SECTION #1, #6, & #7

* USE R12 REBAR ON PIERS WITH 2 LOAD CELLS, SECTION #2/#3 & #4/#5

NOTE: END AND CENTER SECTIONS IN ADDITION TO BARS SHOWN ON SECTION B-B

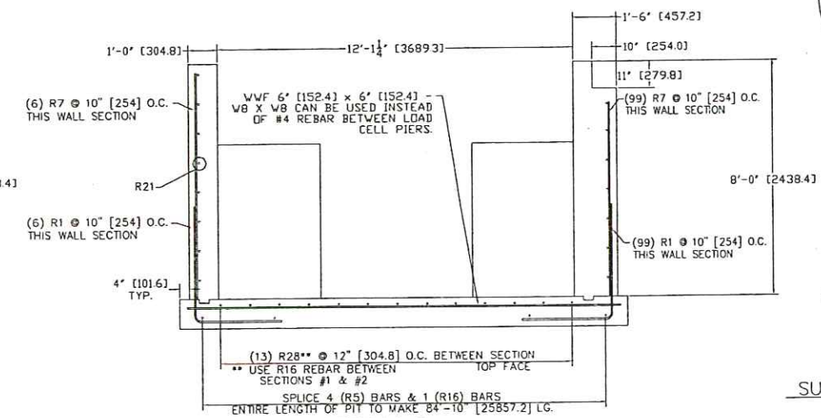

SECTION B-B

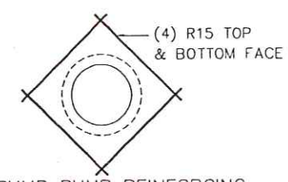

SUMP PUMP REINFORCING

REINFORCING BAR SCHEDULE

	QTY.	SIZE	LENGTH	BENDING	WEIGHT
	190	#6	6'-0" [914.4]	3'-0" [914.4] 3'-0" [914.4]	1712 [776.7 KG]
	32	#6	5'-0" [1524]	3'-0" [914.4] 2'-0" [609.6]	240 [109 KG]
	104	#4	7'-0" [2133.6]	7'-0" [2133.6]	486 [220.6 KG]
	61	#6	14'-8" [4470.4]	14'-8" [4470.4]	1343.8 [609.5 KG]
	75	#4	20'-0" [6096]	20'-0" [6096]	1002 [454 KG]
	84	#4	14'-8" [4470.4]	14'-8" [4470.4]	823 [373.3 KG]
	190	#4	7'-9" [2362.2]	7'-9" [2362.2]	1535.8 [696.6]
	46	#4	4'-0" [1219]	2'-0" [609.6] 2'-0" [609.6]	122.9 [55.8 KG]
	40	#4	5'-6" [1676.4]	5'-6" [1676.4]	147 [66.7 KG]
	5	#4	18'-7" [5054.6]	16'-7" [5054.6]	55.4 [25.1 KG]
	32	#4	6'-6" [1981.2]	6'-6"" [1981.2]	141.1 [64 KG]
	63	#4	10'-0" [3048]	10'-0" [3048]	420.8 [190.9 KG]
	64	#4	6'-0" [1828.8]	6'-0" [1828.8]	256.5 [116.4 KG]
R14	8	#5	8'-9" [2667]	8'-9" [2667]	73 [33.1 KG]
	24	#4	4'-0" [1219.2]	4'-0" [1219.2]	64.1 [29.1 KG]
	6			11'-0" [3352.8]	
				9'-0" [2743.2]	
				6" [152.4] 32" [812.8] 32" [812.8] 6" [152.4]	
				7'-7" [2311.4]	
				3'-0" [914.4]	
				5'-5" [1651]	29 [13.2 KG]
R22		#4	14'-1" [4292.6]	14'-1" [4292.6]	131.7 [59.7 KG]
R23	20	#4	4'-6" [1371.6]	4'-6" [1371.6]	60.1 [27.3 KG]
R24	18	#4	6'-3" [1905]	6'-3" [1905]	75.2 [34.1 KG]
R25	10	#4	2'-9" [838.2]	2'-9" [838.2]	18.4 [8.3 KG]
R26	10	#4	2'-10" [863.6]	2'-10" [863.6]	19 [8.6 KG]
R28	39	#4	16'-0" [4876.8]	16'-0" [4876.8]	416.8 [189.1 KG]
				TOTAL	9,572.6 [4297.5 K

APPROACHES & SLEEPER SLABS					
AR1	46		20'-3" 6172.2]	20'-3" 6172.2]	
AR2	58		20'-10" [6350]	20'-10" [6350]	
AR3	42		14'-1" [4292.6]	14'-1" [4292.6]	
AR4	80		14'-1" [4292.6]	14'-1" [4292.6]	
SS1	10		14'-1" [4292.6]	14'-1" [4292.6]	
SS2	46		4'-6" [1371.6]	4'-6" [1371.6]	
				TOTAL	

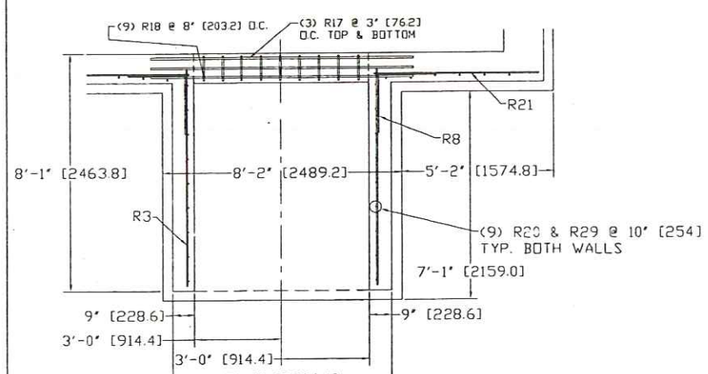

NECK PLAN

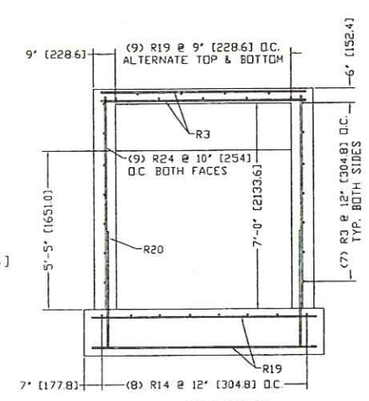

NECK DETAIL

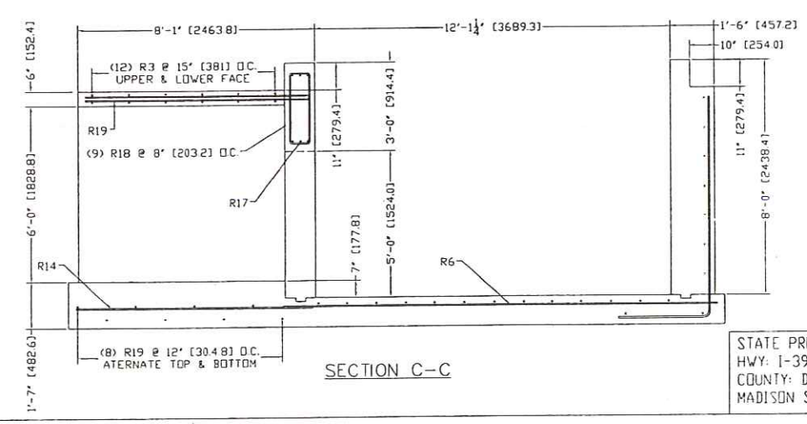

SECTION C-C

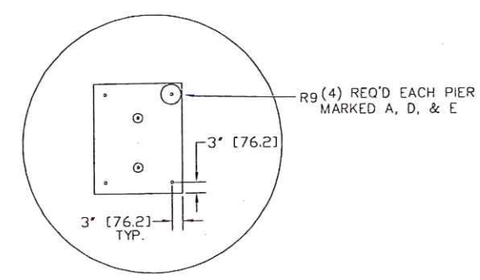

PIER REINFORCING
SEE SCHEDULE FOR LENGTH

STATE PROJECT NUMBER: 1002-02-72 HWY: I-39/90 COUNTY: DANE MADISON SAFETY & WEIGHT FACILITY NO. 16	DATE 2/23/06 SCALE: NONE	SHEET 2 OF 2 DWG: MM84727-RPM

85

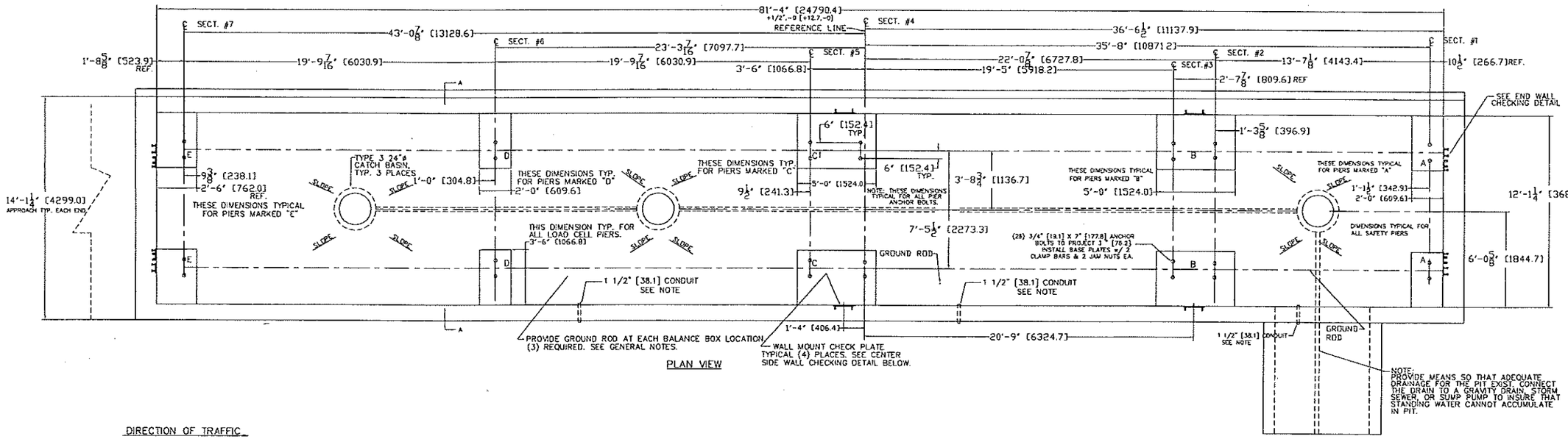

PLAN VIEW

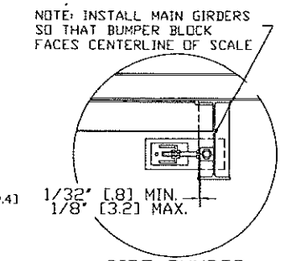

SIDE BUMPER CHECK ADJUSTMENT

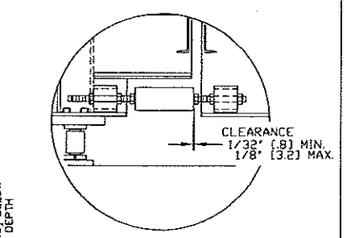

CENTER SCALE CHECKING DETAIL

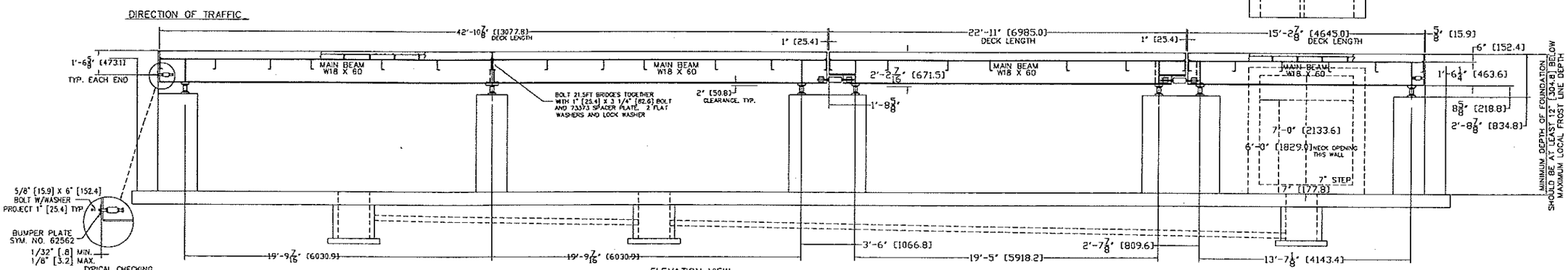

ELEVATION VIEW

TYPICAL CHECKING ADJUSTMENT DETAIL

NOTE: ALL BUMPER BOLTS MUST BE INSTALLED BEFORE MAIN GIRDERS ARE PLACED IN FINAL POSITION.

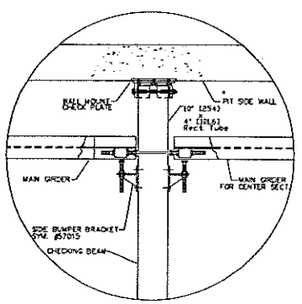

CENTER SCALE CHECKING INSTALLATION DETAIL (TOP VIEW)

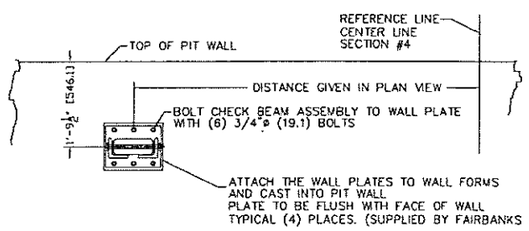

CENTER SIDE WALL CHECKING DETAIL

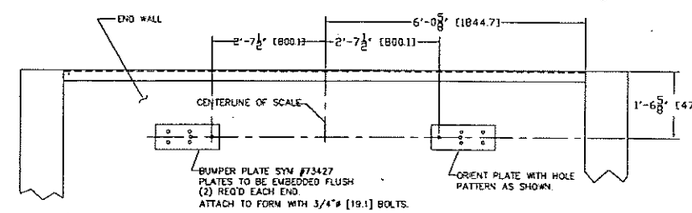

END WALL CHECKING DETAIL

TYPICAL FOR EACH END WALL

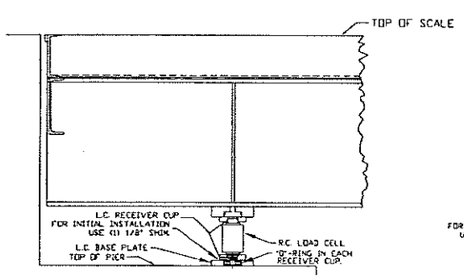

LOAD CELL END ASSEMBLY DETAIL

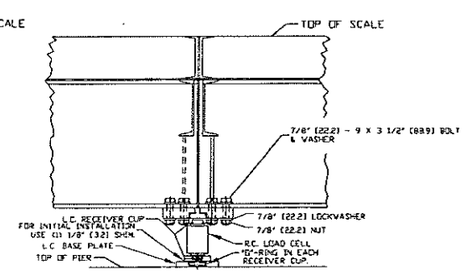

LOAD CELL CENTER ASSEMBLY DETAIL

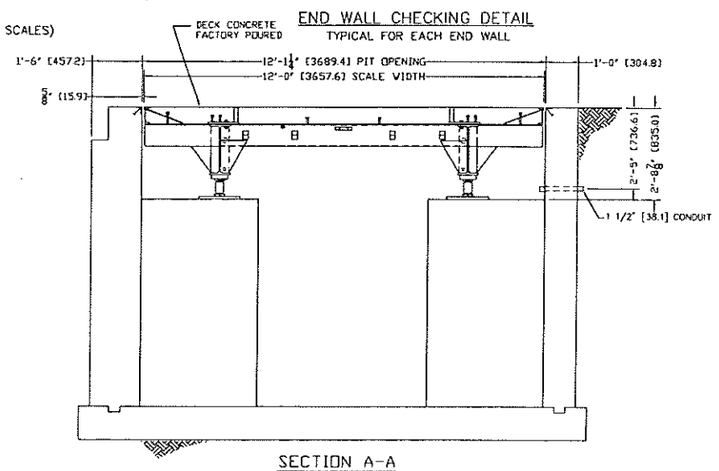

SECTION A-A

GENERAL NOTES:

1. EXCAVATION, FOUNDATION FORMS, REBARS, AND CONCRETE IS TO BE FURNISHED BY CONTRACTOR OR CUSTOMER.
2. THE PIT AS SHOWN IS THE MINIMUM REQUIRED TO ACCOMMODATE THE SCALE. N.I.S.T. REQUIREMENTS AND LOCAL WEIGHTS AND MEASURE REGULATIONS MAY SPECIFY ADDITIONAL INSTALLATION REQUIREMENTS. IN ORDER TO INSURE COMPLIANCE, CONSULT THE GOVERNING WEIGHTS AND MEASURE DEPARTMENT PRIOR TO INSTALLATION.
3. TO COMPLY WITH SPECIFICATIONS OF N.I.S.T., ANY ENDS OF A VEHICLE SCALE INSTALLED IN ONE LOCATION FOR A PERIOD OF SIX MONTHS OR MORE SHALL HAVE A STRAIGHT APPROACH AT LEAST AS WIDE AS THE PLATFORM AND AT LEAST ONE-HALF THE LENGTH OF THE PLATFORM NOT LESS THAN 15 FEET [4572] ON ANY APPROACH ADJACENT TO THE PLATFORM SHALL BE CONSTRUCTED OF CONCRETE OR OTHER DURABLE MATERIAL TO INSURE THAT THIS PORTION REMAINS SMOOTH AND IS IN THE SAME PLANE AS THE PLATFORM. WHERE NECCESSARY FOR DRAINAGE, THE REMAINING PORTION OF THE APPROACH MAY SLOPE SLIGHTLY.
4. WORK FROM CENTERLINES WHEN ERECTING FORMS AND PLACING FOUNDATION BOLTS. PLACE BOLTS TO WITHIN ±1/8" [3.175] OF POSITIONS INDICATED ON DRAWING. (BOLTS MUST BE PLACED WITHIN ±1/8" [3.175] OF TOTAL DIMENSIONS FROM CENTERLINE OF SCALE.)
5. ADEQUATE PROVISION MUST BE MADE FOR READY ACCESS TO THE PIT FOR INSPECTION OR MAINTENANCE.
6. VEHICLES SHOULD ENTER AND EXIT SCALE FROM APPROACHES ONLY. ALL CROSS TRAFFIC SHOULD BE RESTRICTED.
7. IT IS RECOMMENDED THAT THE WEIGHBRIDGE BE SET AND BLOCKED IN THE PIT BEFORE THE LOAD CELL ASSEMBLIES ARE INSTALLED.
8. WHEN WELDING IN PIT OR ON WEIGHBRIDGE, LOAD CELLS MUST BE DISCONNECTED AND LEADS TAPED TO PREVENT THEM FROM TOUCHING EACH OTHER AND FROM GROUNDING.
9. SUMP CROCK AND PUMP BY OTHERS.

STATE PROJECT NUMBER: 1002-02-72 HWY: I-39/90 COUNTY: DANE MADISON SAFETY & WEIGHT FACILITY NO. 16	DATE 2/23/06 SCALE: NONE	SHEET 1 OF 1 DWG: MM84727-SPM 86

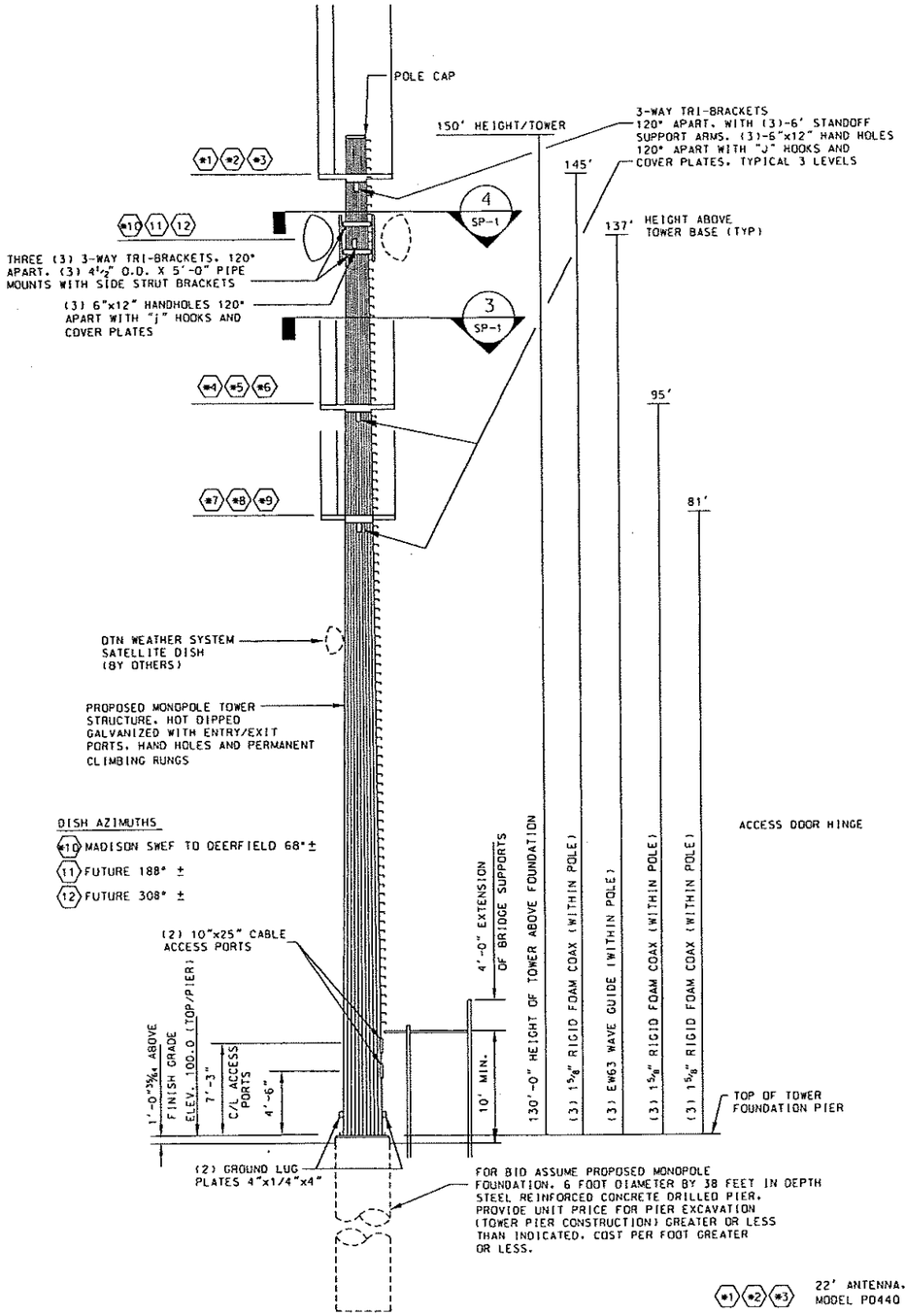

2 SP-1 MONOPOLE/TOWER DESIGN LOAD INFORMATION

#00 INDICATES ANTENNA AND TRANSMISSION LINE TO BE INSTALLED AS PART OF THIS CONTRACT

00 INDICATES ANTENNA AND TRANSMISSION LINE FOR FUTURE INSTALLATION

#1 #2 #3 — 22' ANTENNA, SIMILAR TO MODEL PD440

#4 #5 #6 #7 #8 #9 — 11' ANTENNA, SIMILAR TO MODEL PD340

#10 11 12 — 8' DIA. DISH WITH RADOME AND NO ICE DEFLECTOR

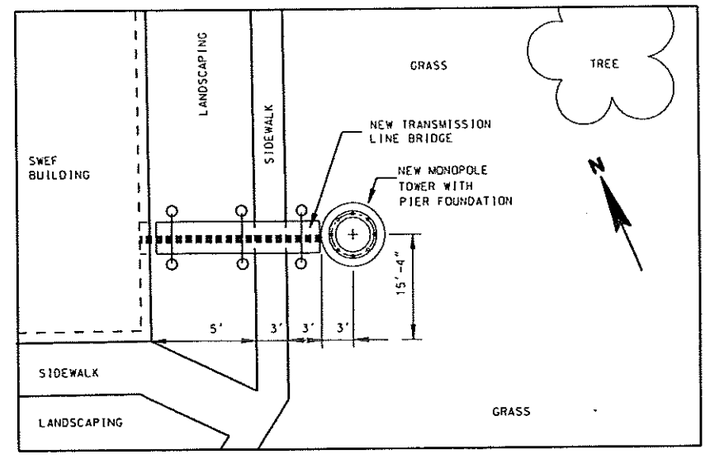

1 SP-1 MONOPOLE/TOWER SITE PLAN

SCALE 1/4" = 1'-0"

0 4' 8'

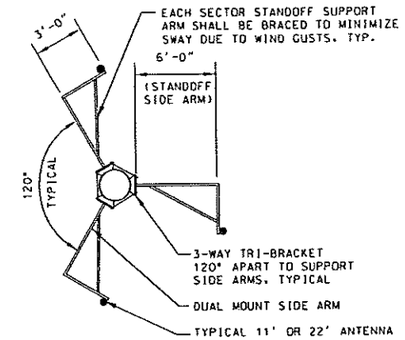

3 SP-1 LAYOUT-SIDE ARM ANTENNA SUPPORT

(THREE LOCATIONS) SCALE 1/4" = 1'-0"

0 6' 12'

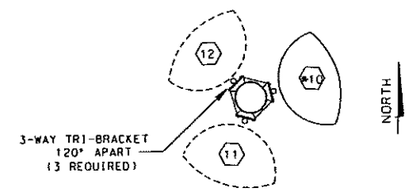

4 SP-1 PLAN - DISH ANTENNA

SCALE 1/4" = 1'-0"

0 6' 12'

NOTES FOR TOWER

1. PROVIDE AND INSTALL A 6-FOOT SIDE ARM (STANDOFF), NINE (9) REQUIRED. EACH SIDE ARM FOR SUPPORT OF ONE (1) PD-440 DIPOLE ANTENNA. 3-WAY TRI-BRACKET 120° APART TO SUPPORT SIDE ARMS. SEE DETAIL 3 ON THIS SHEET.

2. PROVIDE AND INSTALL A 4.5" O.D. x 5'-0" PIPE MOUNTS FOR EACH DISH ANTENNA INDICATED (PROPOSED AND FUTURE), THREE (3) REQUIRED. PROVIDE THREE (3) 3-WAY TRI-BRACKETS 120° APART TO SUPPORT PIPE MOUNTS. INSTALL PIPE MOUNTS BOTH FOR DISH ANTENNA INSTALLED AS PART OF THIS CONTRACT AND FUTURE ANTENNAS INSTALLED OUTSIDE OF THIS CONTRACT.

Madison SWEF
Communications Tower
Dane County, Wisconsin

State of Wisconsin
Dept. of Transportation

Issued / Revised

ISSUED FOR BID

Drawing Title
TOWER LOAD INFORMATION AND SITE PLAN DETAILS

Sheet No.
SP-1

STATE PROJECT NUMBER: 1002-02-72	HWY: IH 39/90	COUNTY: DANE	COMMUNICATIONS TOWER DETAILS	SCALE:	SHEET NO: 87	E

NOTE:
TWO MODEL B-576 PORT PLATES REQUIRED. ONE EXTERIOR WALL FACE AND ONE INTERIOR WALL FACE. WITH 4" OF RIGID INSULATION BETWEEN.

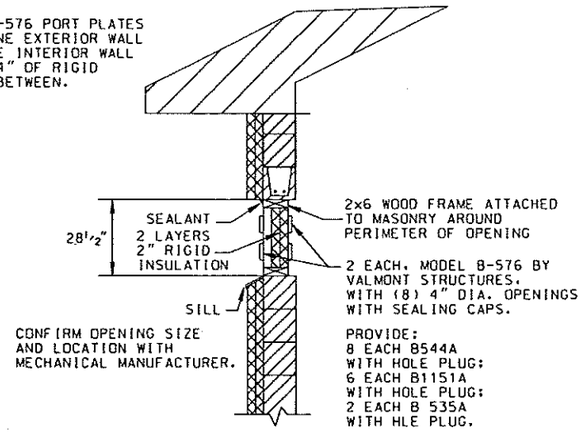

3 / E-1 WAVEGUIDE ENTRY DETAIL

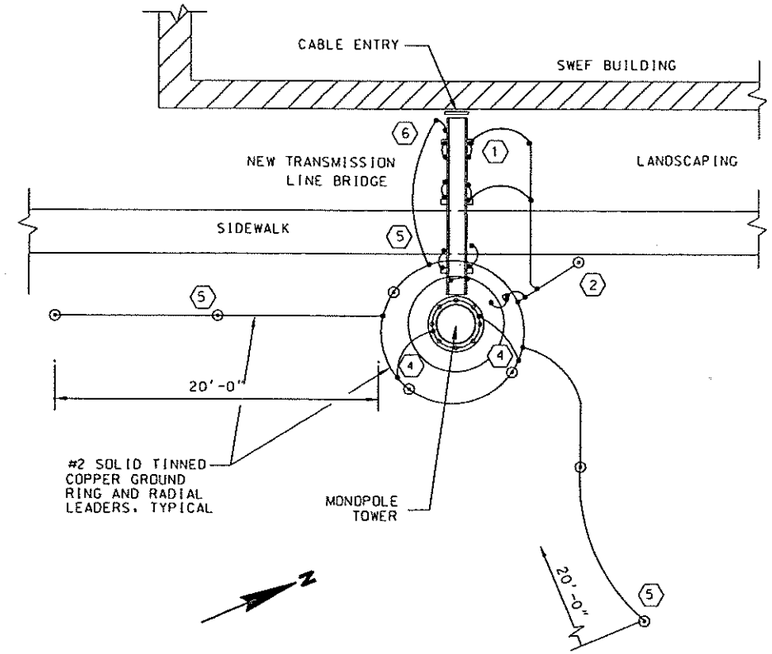

1 / E-1 SITE GROUNDING PLAN

SCALE 1/4" = 1'-0"
0 4' 8'

LEGEND

- ⊙ GROUND ROD LOCATION
- • GROUNDING BOND CONNECTION
- ▨ SWEF BUILDING WALL

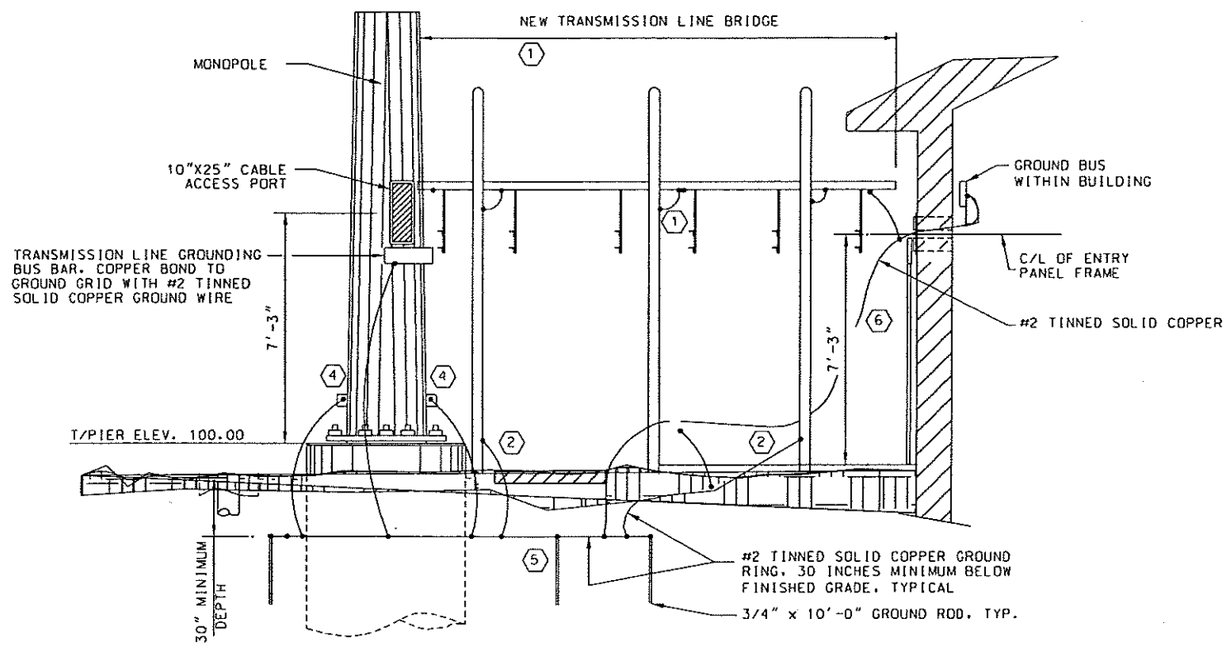

2 / E-1 TOWER AND CABLE BRIDGE SUPPORT GROUND DETAIL

SCALE 1/2" = 1'-0"
0 2' 4'

ELECTRICAL NOTES:

1. OUTSIDE CABLE TRAY BY TOWER CONTRACTOR. ELECTRICAL CONTRACTOR TO BOND ALL JOINTS IN CABLE TRAY WITH #6 STRANDED COPPER GREEN INSULATED. EXOTHERMICALLY WELD CONNECTIONS TO CABLE TRAY ON BOTH SIDES OF JOINT AND TO SUPPORT POSTS. BOND TO EXTERIOR GROUND RING. REFER TO DETAIL 1/E-1. INCLUDE EXISTING CABLE TRAY JOINTS.
2. EXOTHERMICALLY BOND GROUND WIRE TO TRANSMISSION LINE BRIDGE POSTS AND EXISTING CABLE TRAY SUPPORTS POSTS APPROXIMATELY 12 INCHES ABOVE FINISHED GRADE.
3. MANUFACTURER'S NAMES AND CATALOG NUMBERS ARE USED FOR QUALITY AND PERFORMANCE ONLY.

   EQUIPMENT MANUFACTURED BY OTHERS WILL BE EQUALLY ACCEPTABLE PROVIDED THEY MEET OR EXCEED THE SPECIFICATIONS.
4. EXOTHERMICALLY BOND #2 SOLID TINNED COPPER GROUND WIRE TO TOWER GROUND PLATES AS SHOWN IN DETAIL 2/E-1.
5. ELECTRICAL CONTRACTOR TO PROVIDE AND INSTALL GROUND RODS. GROUND RING CONDUCTORS MAKE ALL BELOW AND ABOVE GROUND CONNECTIONS.
6. EXOTHERMICALLY BOND EXISTING GROUND BUS WITHIN BUILDING TO NEW GROUND GRID.

Madison SWEF
Communications Tower

State of Wisconsin
Dept. of Transportation

Issued / Revised
ISSUED FOR BID

Drawing Title
ELECTRICAL PLAN & DETAILS

Sheet No.
E-1

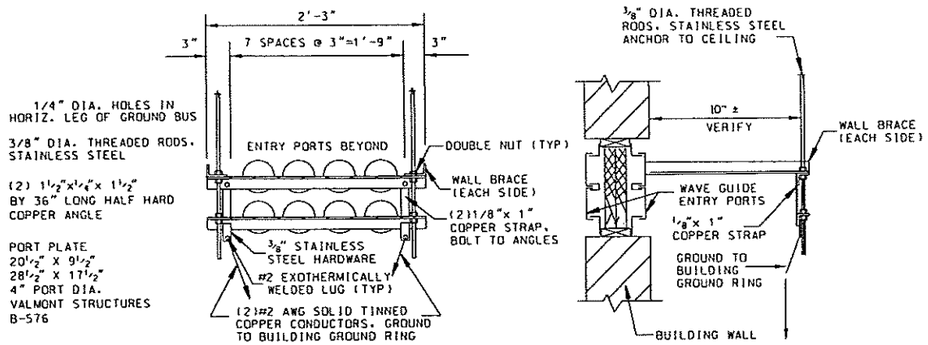

ELEVATION — SECTION

1 / E-2 MICROWAVE CABLE ENTRANCE GROUND BUS DETAIL

NOT TO SCALE

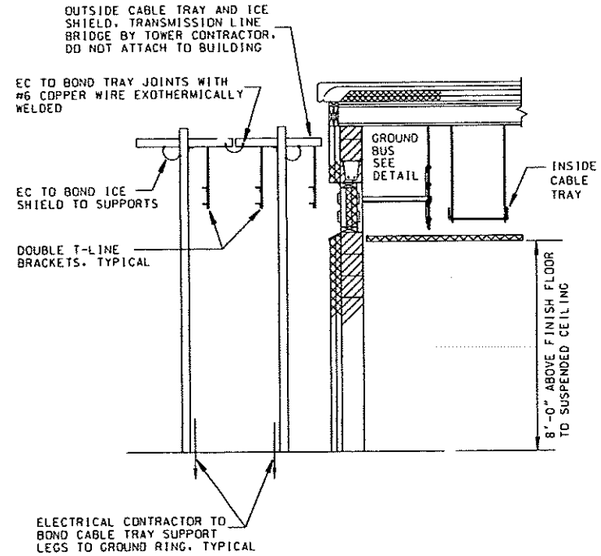

2 / E-2 CABLE ENTRANCE GROUND DETAIL

0' 2' 5'

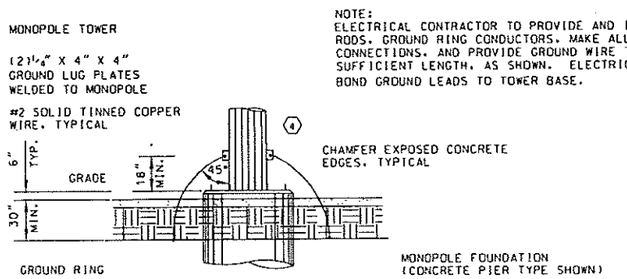

NOTE:
ELECTRICAL CONTRACTOR TO PROVIDE AND INSTALL GROUND RODS, GROUND RING CONDUCTORS, MAKE ALL UNDERGROUND CONNECTIONS, AND PROVIDE GROUND WIRE TO ABOVE GRADE, OF SUFFICIENT LENGTH, AS SHOWN. ELECTRICAL CONTRACTOR TO BOND GROUND LEADS TO TOWER BASE.

3 / E-2 MONOPOLE TOWER GROUND DETAIL

NOT TO SCALE

Madison SWEF
Communications Tower
Dane County, Wisconsin

State of Wisconsin
Dept. of Transportation

Issued / Revised

ISSUED FOR BID

Drawing Title

ELECTRICAL DETAILS

Sheet No.

E-2

STATE PROJECT NUMBER: 1002-02-72	HWY: IH 39/90	COUNTY: DANE	COMMUNICATIONS TOWER DETAILS	SCALE:	SHEET NO: 89	E

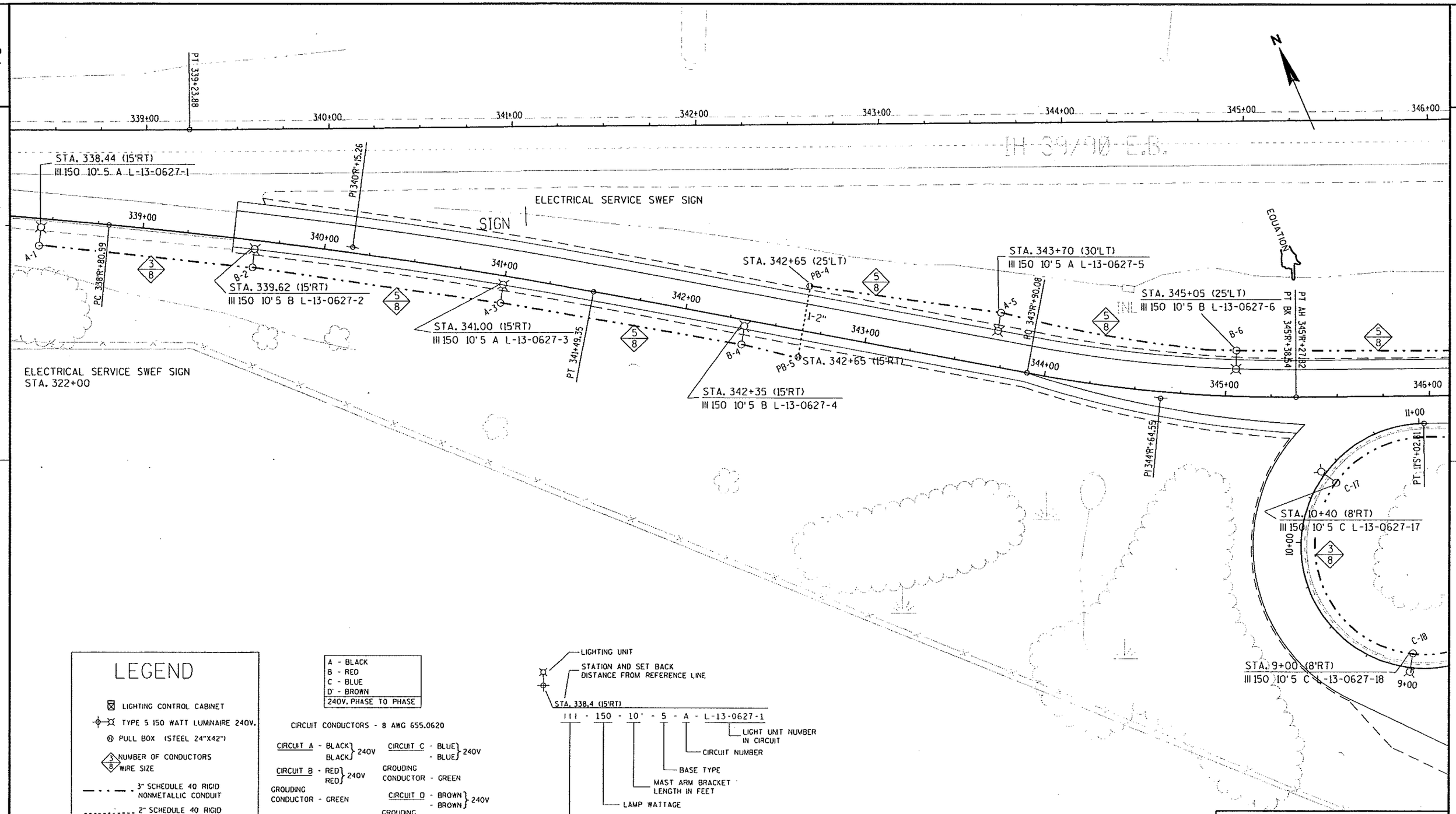

LEGEND

- LIGHTING CONTROL CABINET
- TYPE 5 150 WATT LUMINAIRE 240V.
- PULL BOX (STEEL 24"X42")
- NUMBER OF CONDUCTORS / WIRE SIZE
- 3" SCHEDULE 40 RIGID NONMETALLIC CONDUIT
- 2" SCHEDULE 40 RIGID NONMETALLIC CONDUIT

A - BLACK
B - RED
C - BLUE
D - BROWN
240V. PHASE TO PHASE

CIRCUIT CONDUCTORS - 8 AWG 655.0620

CIRCUIT A - BLACK, BLACK } 240V
CIRCUIT B - RED, RED } 240V
GROUDING CONDUCTOR - GREEN

CIRCUIT C - BLUE, BLUE } 240V
GROUDING CONDUCTOR - GREEN
CIRCUIT D - BROWN, BROWN } 240V
GROUDING CONDUCTOR - GREEN

LIGHTING UNIT
STATION AND SET BACK DISTANCE FROM REFERENCE LINE

STA. 338.4 (15'RT)
III - 150 - 10' - 5 - A - L-13-0627-1

- L-13-0627-1: LIGHT UNIT NUMBER IN CIRCUIT
- A: CIRCUIT NUMBER
- 5: BASE TYPE
- 10': MAST ARM BRACKET LENGTH IN FEET
- 150: LAMP WATTAGE
- III: DISTRIBUTION TYPE

LIGHTING UNIT CODE
(TYPICAL)

0 25 FEET 50 75
SCALE

HIGHWAY LIGHTING
IH 39/90 E.B. - MADISON SWEF
TOWN OF PLEASANT SPRINGS DANE COUNTY
LIGHTING NO. L627

PROJECT NO: 1002-02-72	HWY: IH 39/90	COUNTY: DANE	SITE LIGHTING PLAN	SHEET NO: 90	E

FILE NAME : C:\Users\PW\De\SWEF16\SiteLightingl.DGN PLOT DATE : 18-FEB-2006 15:41 PLOT BY : DOTRES PLOT NAME: SiteLightingl.dgn PLOT SCALE : 50:1

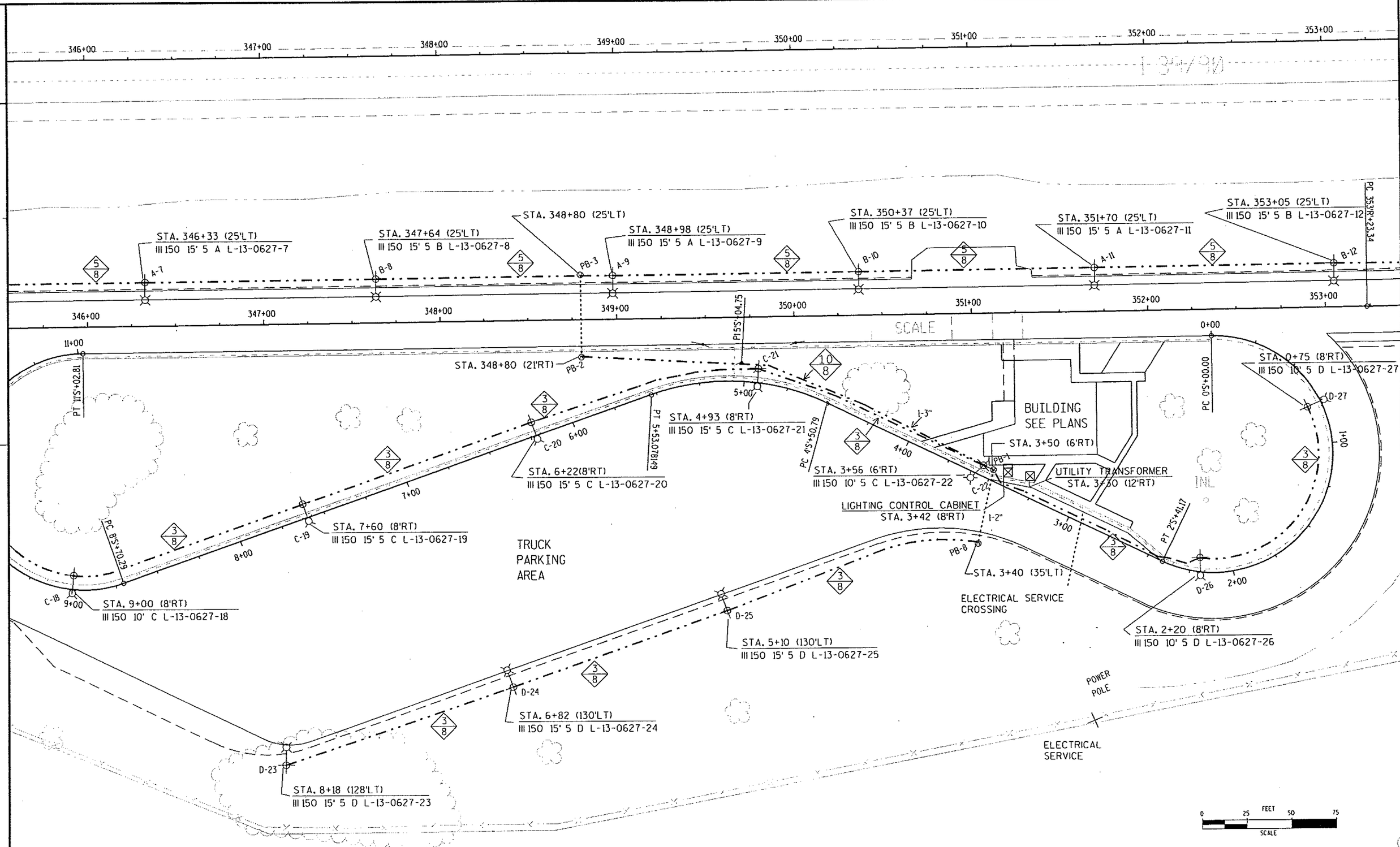

PROJECT NO: 1002-02-72	HWY: IH 39/90	COUNTY: DANE	SITE LIGHTING PLAN	SHEET NO: 91	E

FILE NAME : u:\Projects\Madison\Plan\SiteLighting2.DGN PLOT DATE : 28-FEB-2006 14:06 PLOT BY : DOTRES PLOT NAME: SiteLighting2.dgn PLOT SCALE : 50:1

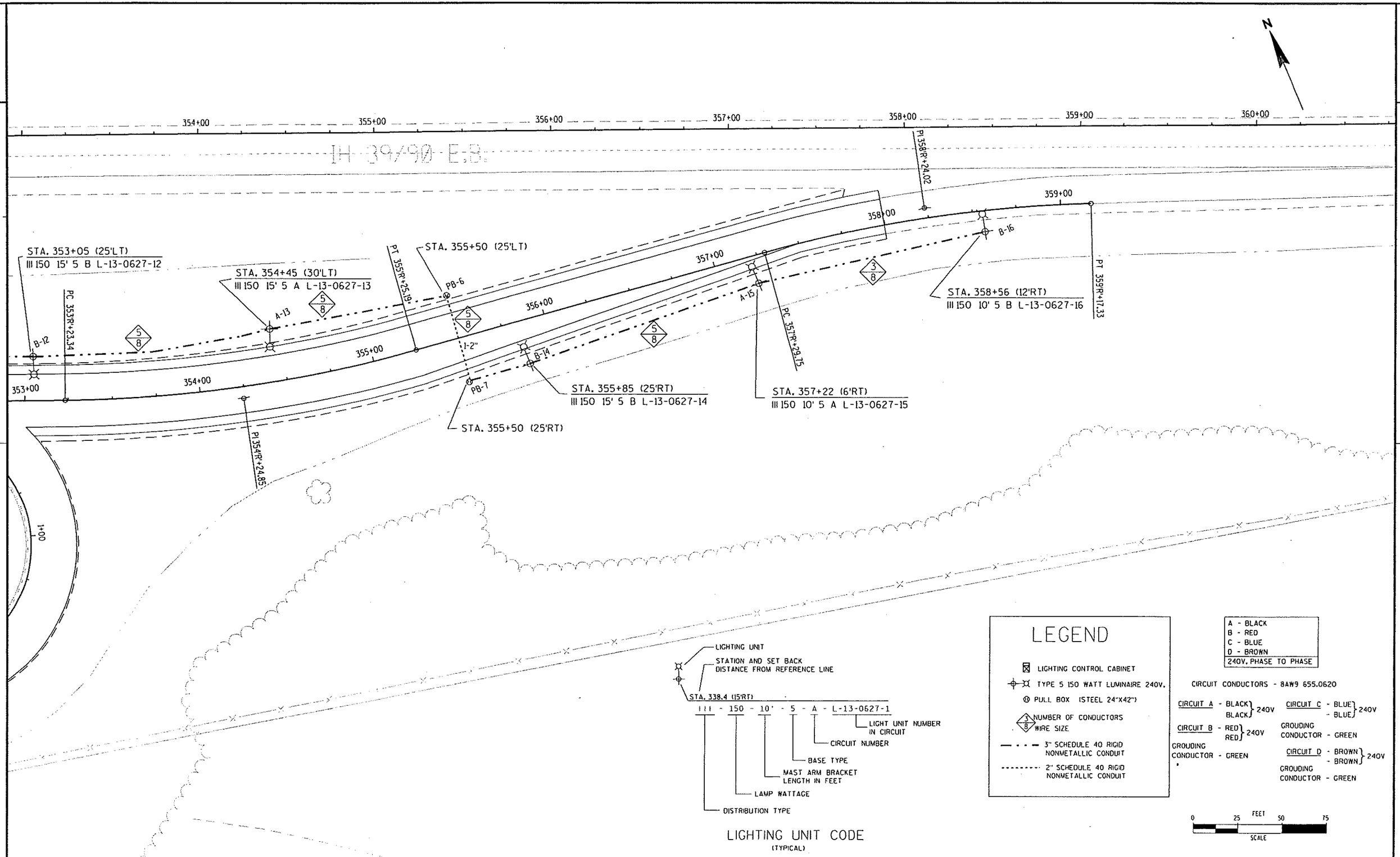

PROJECT NO: 1002-02-72	HWY: IH 39/90	COUNTY: DANE	SITE LIGHTING PLAN	SHEET NO: 92	E

FILE NAME : u:\Projects\Madison\Plan\SiteLighting3.DGN PLOT DATE : 13-FEB-2006 14:33 PLOT BY : DOTRES PLOT NAME: SiteLighting3.dgn PLOT SCALE : 50:1

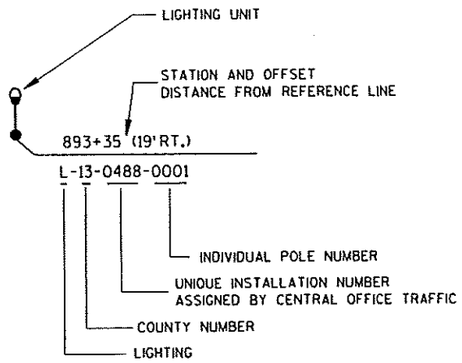

LIGHTING UNIT CODE
(TYPICAL)

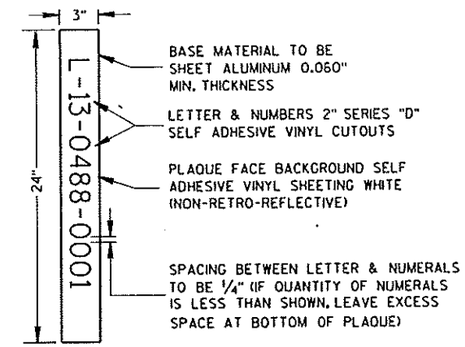

IDENTIFICATION PLAQUE

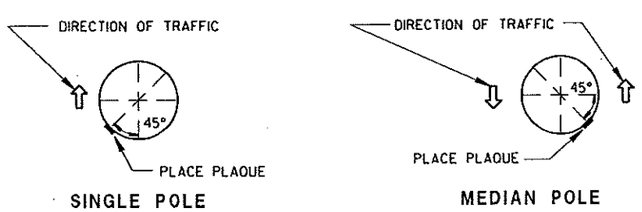

NOTES:

1) FOR MEDIAN MOUNTINGS PLACE PLAQUE SO THAT IT IS VISIBLE TO TRAFFIC TRAVELLING NORTH OR EAST.

LIGHTING UNIT IDENTIFICATION PLAQUE PLACEMENT

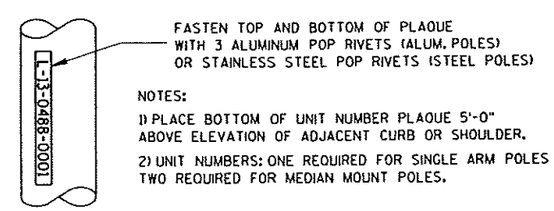

NOTES:

1) PLACE BOTTOM OF UNIT NUMBER PLAQUE 5'-0" ABOVE ELEVATION OF ADJACENT CURB OR SHOULDER.

2) UNIT NUMBERS: ONE REQUIRED FOR SINGLE ARM POLES TWO REQUIRED FOR MEDIAN MOUNT POLES.

LIGHTING UNIT IDENTIFICATION PLAQUE REQUIREMENTS
(TYPICAL ALL LIGHTING UNITS)

PROJECT NO: 1002-02-72	HWY: IH 39/90	COUNTY: DANE	LIGHTING UNIT PLAQUE DETAIL	SHEET 93	E

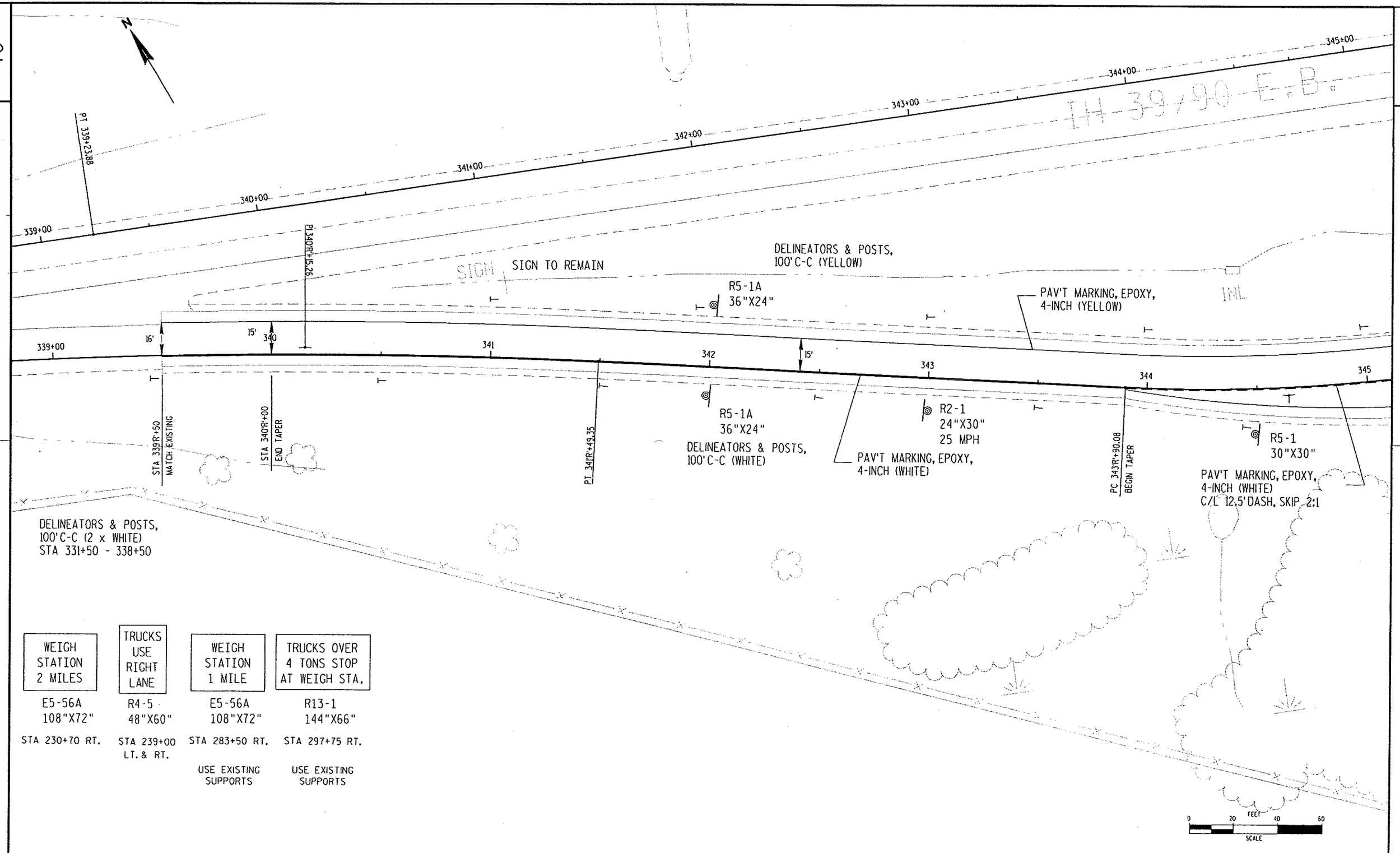

PROJECT NO: 1002-02-72	HWY: IH 39/90	COUNTY: DANE	PAVEMENT MARKING & SIGNING	SHEET NO: 94	E

FILE NAME : c:\Users\P\De\SWEF16\PavtMarking1.dgn PLOT DATE : 28-FEB-2006 14:12 PLOT BY : DOTRES PLOT NAME : PavtMarking1.dgn PLOT SCALE : 40:1

2

EQUATION

PT BK 345+38.54

PT AH 345+27.82

R3-2
30"X30"

DELINEATORS & POSTS,
100'C-C (YELLOW)

N

SIGN

PAV'T MARKING, EPOXY,
4-INCH (YELLOW)

PAV'T MARKING, CROSSWALK
EPOXY 6-INCH (YELLOW)

PAV'T MARKING, STOP LINE
EPOXY 18-INCH (WHITE)

345+00

346+00

347+00

348+00

349+00

350+00

+40

15'

15'

SCALE

11+00

PAV'T MARKING, EPOXY,
4-INCH (WHITE)

R1-2
36"

R1-2
36"

PT 11'S+02.81
STA 345+96.98
15'RT.

PAV'T MARKING, EPOXY,
4-INCH (WHITE)

PAV'T MARKING, EPOXY,
4-INCH (YELLOW)

DELINEATORS & POSTS,
100'C-C (WHITE)

PAV'T MARKING, EPOXY,
4-INCH (WHITE)
C/L 12.5'DASH, SKIP 2:1

PAV'T MARKING, EPOXY,
4-INCH (WHITE)

PT 5'S+53.08

PC 4'S+50.79

R1-1
36"X36"

5+00

6+00

4+00

24'

R6-2L
24X30"

R6-2L
24X30"

7+00

PAV'T MARKING, PARKING
STALL, EPOXY, (YELLOW)

85'(TYP)

15'(TYP)

45°

30'

PAV'T MARKING, WORDS
EPOXY (YELLOW)

1

2

3

4

5

10+00

24'

2'

PC 8'S+70.29

8+00

9+00

DELINEATORS & POSTS,
25'C-C (YELLOW)

R7-1D
12"X18"

PAV'T MARKING, EPOXY,
4-INCH (YELLOW)

R7-1D
12"X18"

28'

2'

2'

PAV'T MARKING, EPOXY,
4-INCH (YELLOW)

R7-1L
12"X18"

18"

4"

24"

1 2 3 4 5

PAVEMENT MARKING WORDS EPOXY
DETAIL

0 20 FEET 40 60
SCALE

2

PROJECT NO: 1002-02-72	HWY: IH 39/90	COUNTY: DANE	PAVEMENT MARKING & SIGNING	SHEET NO: 95	E

FILE NAME : c:\Users\PWDe\SWEF16\PavtMarking2.dgn PLOT DATE : 28-FEB-2026 14:13 PLOT BY : DOTRES PLOT NAME: PavtMarking2.dgn PLOT SCALE : 40:1

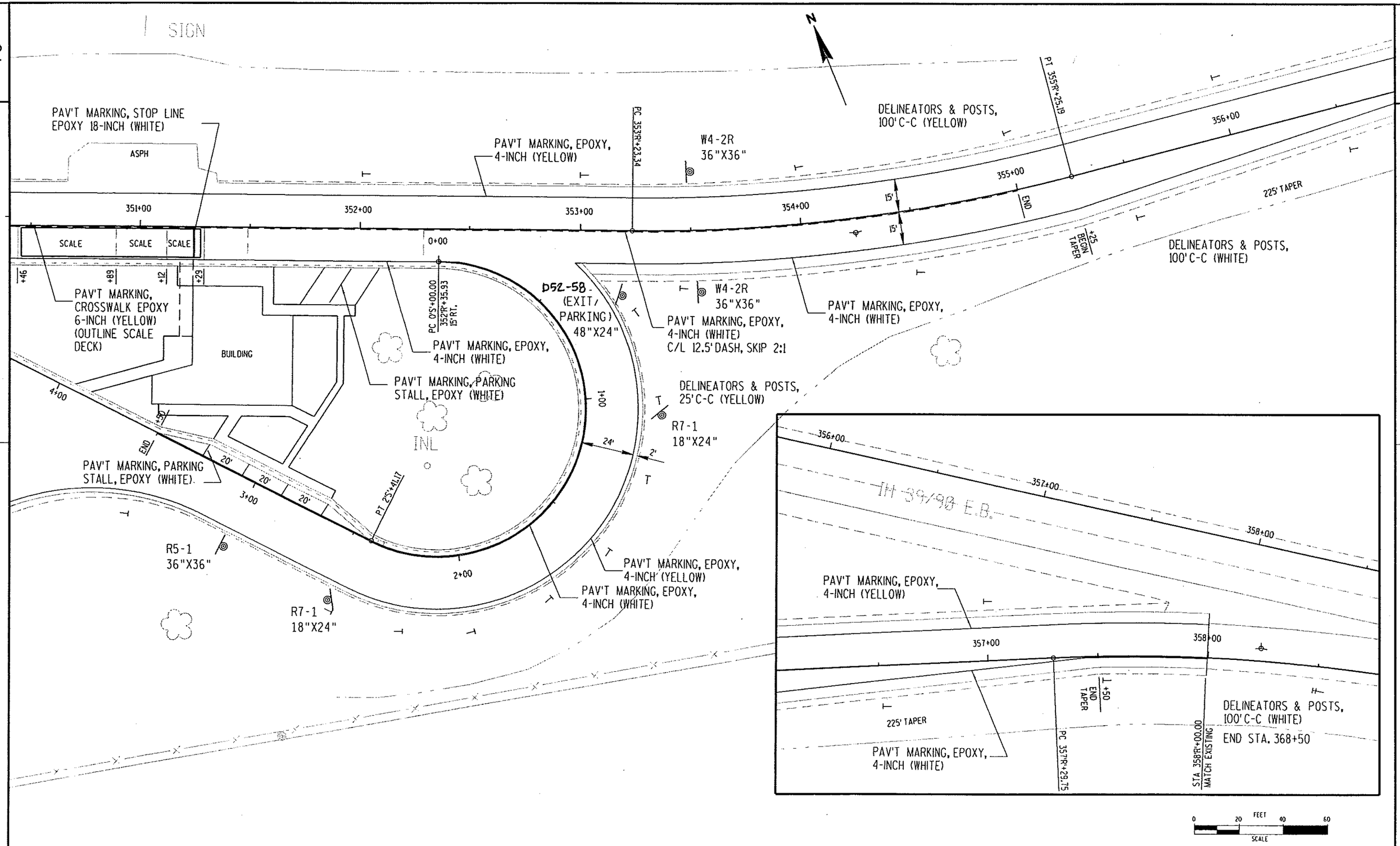

PROJECT NO: 1002-02-72	HWY: IH 39/90	COUNTY: DANE	PAVEMENT MARKING & SIGNING	SHEET NO: 96	E

FILE NAME : c:\Users\P\De\SWEF16\PavtMarking3.dgn PLOT DATE : 20-MAR-2006 11:58 PLOT BY : DOTRES PLOT NAME: PavtMarking3.dgn PLOT SCALE : 48:1

DATE 22MAR06

E S T I M A T E O F Q U A N T I T I E S

LINE NUMBER	ITEM	ITEM DESCRIPTION	UNIT	TOTAL	1002-02-72 QUANTITY
0010	201.0120	CLEARING	ID	32.000	32.000
0020	201.0220	GRUBBING	ID	32.000	32.000
0030	204.0100	REMOVING PAVEMENT	SY	9,457.000	9,457.000
0040	204.0110	REMOVING ASPHALTIC SURFACE	SY	800.000	800.000
0050	204.0155	REMOVING CONCRETE SIDEWALK	SY	49.000	49.000
0060	204.0180	REMOVING MARKER POSTS	EACH	28.000	28.000
0070	204.0190	REMOVING SURFACE DRAINS	EACH	1.000	1.000
0080	204.0195	REMOVING CONCRETE BASES	EACH	1.000	1.000
0090	204.0205	REMOVING UTILITY POLES	EACH	11.000	11.000
0100	204.0220	REMOVING INLETS	EACH	2.000	2.000
0110	204.0230	REMOVING BUILDING (STATION) 01. 351'R'+00	LS	1.000	1.000
0120	204.9060.S	REMOVING (ITEM DESCRIPTION) 01. PULL BOXES	EACH	1.000	1.000
0130	205.0100	EXCAVATION COMMON	CY	5,000.000	5,000.000
0140	211.0200	PREPARE FOUNDATION FOR CONCRETE PAVEMENT (PROJECT) 01. 1002-02-72	LS	1.000	1.000
0150	213.0100	FINISHING ROADWAY (PROJECT) 01. 1002-02-72	EACH	1.000	1.000
0160	301.0100.S	QMP BASE AGGREGATE	TON	4,150.000	4,150.000
0170	305.0110	BASE AGGREGATE DENSE 3/4-INCH	TON	4,150.000	4,150.000
0180	415.0110	CONCRETE PAVEMENT 11-INCH	SY	11,975.000	11,975.000
0190	415.1150.S	CONCRETE PAVEMENT FAST TRACK (INCH) 01. 11-INCH	SY	1,397.000	1,397.000
0200	415.2000.S	INCENTIVE STRENGTH CONCRETE PAVEMENT	DOL	2,750.000	2,750.000
0210	415.3000.S	QMP CONCRETE PAVEMENT	DAY	10.000	10.000
0220	415.5105	CONCRETE PAVEMENT CONTINUOUS REINFORCEMENT	SY	871.000	871.000
0230	416.0050	CONCRETE PAVEMENT APPROACH SLAB	SY	67.000	67.000
0240	416.0160	CONCRETE DRIVEWAY 6-INCH	SY	48.000	48.000
0250	416.0610	PAVEMENT TIES	EACH	18.000	18.000
0260	416.0620	PAVEMENT DOWEL BARS	EACH	258.000	258.000
0270	416.1010	CONCRETE SURFACE DRAINS	CY	6.000	6.000
0280	455.0105	ASPHALTIC MATERIAL PG58-28	TON	32.000	32.000
0290	455.0605	TACK COAT	GAL	45.000	45.000
0300	460.1100	HMA PAVEMENT TYPE E-0.3	TON	532.000	532.000
0310	460.2000	INCENTIVE DENSITY HMA PAVEMENT	DOL	350.000	350.000
0320	460.3000	QMP HMA MIXTURE	TON	532.000	532.000
0330	532.0200.S	WALL MODULAR BLOCK GRAVITY	SF	144.000	144.000
0340	602.0410	CONCRETE SIDEWALK 5-INCH	SF	2,180.000	2,180.000
0350	602.0505	CURB RAMP DETECTABLE WARNING FIELD YELLOW	SF	16.000	16.000
0360	602.1500	CONCRETE STEPS	SF	130.000	130.000
0370	606.0200	RIPRAP MEDIUM	CY	4.000	4.000
0380	608.0315	STORM SEWER PIPE REINFORCED CONCRETE CLASS III 15-INCH	LF	70.000	70.000
0390	611.0303	INLETS TYPE 3	EACH	4.000	4.000
0400	611.0639	INLET COVERS TYPE H-S	EACH	4.000	4.000
0410	614.0305	STEEL PLATE BEAM GUARD CLASS A	LF	424.000	424.000
0420	614.0370	STEEL PLATE BEAM GUARD ENERGY ABSORBING TERMINAL	EACH	2.000	2.000
0430	618.0100	MAINTENANCE AND REPAIR OF HAUL ROADS (PROJECT) 01. 1002-02-72	EACH	1.000	1.000
0440	619.1000	MOBILIZATION	EACH	1.000	1.000
0450	624.0100	WATER	MGAL	17.000	17.000

DATE 22MAR06

E S T I M A T E O F Q U A N T I T I E S

LINE NUMBER	ITEM	ITEM DESCRIPTION	UNIT	TOTAL	1002-02-72 QUANTITY
0460	625.0500	SALVAGED TOPSOIL	SY	10,600.000	10,600.000
0470	627.0200	MULCHING	SY	9,800.000	9,800.000
0480	628.1504	SILT FENCE	LF	1,300.000	1,300.000
0490	628.1520	SILT FENCE MAINTENANCE	LF	1,300.000	1,300.000
0500	628.1905	MOBILIZATIONS EROSION CONTROL	EACH	1.000	1.000
0510	628.1910	MOBILIZATIONS EMERGENCY EROSION CONTROL	EACH	3.000	3.000
0520	628.7005	INLET PROTECTION TYPE A	EACH	5.000	5.000
0530	629.0210	FERTILIZER TYPE B	CWT	7.000	7.000
0540	630.0130	SEEDING MIXTURE NO. 30	LB	190.000	190.000
0550	630.0140	SEEDING MIXTURE NO. 40	LB	14.000	14.000
0560	631.1000	SOD LAWN	SY	730.000	730.000
0570	631.1100	SOD EROSION CONTROL	SY	180.000	180.000
0580	632.0101	TREES (SPECIES, ROOT, SIZE) 01. SCARLET SENTINEL HYBRID MAPLE, 2 1/2-INCH CAL B&B	EACH	1.000	1.000
0590	632.0201	SHRUBS (SPECIES, ROOT, SIZE) 01. GRO-LOW FRAGRANT SUMAC, 18-INCH HGT CONT	EACH	46.000	46.000
0600	632.0201	SHRUBS (SPECIES, ROOT, SIZE) 02. NEON FLASH SPIREA, 18-INCH HGT CONT	EACH	7.000	7.000
0610	632.0201	SHRUBS (SPECIES, ROOT, SIZE) 03. MOHICAN VIBURNUM, 24-INCH HGT CONT	EACH	6.000	6.000
0620	632.0201	SHRUBS (SPECIES, ROOT, SIZE) 04. GOLD COAST CHINESE JUNIPER, 24-INCH SPD CONT	EACH	47.000	47.000
0630	632.0201	SHRUBS (SPECIES, ROOT, SIZE) 05. ANDORRA COMPACT JUNIPER, 24-INCH SPD CONT	EACH	31.000	31.000
0640	632.9101	LANDSCAPE PLANTING SURVEILLANCE AND CARE CYCLES	EACH	148.000	148.000
0650	633.0100	DELINEATOR POSTS STEEL	EACH	71.000	71.000
0660	633.0500	DELINEATORS	EACH	90.000	90.000
0670	634.0614	POSTS WOOD 4X6-INCH X 14-FT	EACH	21.000	21.000
0680	635.0200	SIGN SUPPORTS STRUCTURAL STEEL HS	LB	550.000	550.000
0690	636.0100	SIGN SUPPORTS CONCRETE MASONRY	CY	1.200	1.200
0700	636.1000	SIGN SUPPORTS STEEL REINFORCEMENT HS	LB	68.000	68.000
0710	637.0101	SIGNS TYPE I	SF	174.000	174.000
0720	637.0202	SIGNS REFLECTIVE TYPE II	SF	142.000	142.000
0730	638.2601	REMOVING SIGNS TYPE I	EACH	2.000	2.000
0740	638.2602	REMOVING SIGNS TYPE II	EACH	9.000	9.000
0750	638.3000	REMOVING SMALL SIGN SUPPORTS	EACH	9.000	9.000
0760	642.5200	FIELD OFFICE TYPE C (PROJECT) 01. 1002-02-72	EACH	1.000	1.000
0770	643.0100	TRAFFIC CONTROL (PROJECT) 01. 1002-02-72	EACH	1.000	1.000
0780	643.0300	TRAFFIC CONTROL DRUMS	DAYS	15,940.000	15,940.000
0790	643.0420	TRAFFIC CONTROL BARRICADES TYPE III	DAYS	1,150.000	1,150.000
0800	643.0705	TRAFFIC CONTROL WARNING LIGHTS TYPE A	DAYS	2,290.000	2,290.000
0810	643.0715	TRAFFIC CONTROL WARNING LIGHTS TYPE C	DAYS	160.000	160.000
0820	643.0800	TRAFFIC CONTROL ARROW BOARDS	DAYS	20.000	20.000
0830	643.0900	TRAFFIC CONTROL SIGNS	DAYS	2,175.000	2,175.000
0840	643.0905.S	TRAFFIC CONTROL COVERING SIGNS	EACH	2.000	2.000
0850	643.1050.S	TRAFFIC CONTROL SIGNS PORTABLE CHANGEABLE MESSAGE	DAY	50.000	50.000
0860	645.0130	GEOTEXTILE FABRIC TYPE R	SY	42.000	42.000
0870	646.0106	PAVEMENT MARKING EPOXY 4-INCH	LF	7,500.000	7,500.000
0880	647.0256	PAVEMENT MARKING SYMBOLS EPOXY	EACH	5.000	5.000
0890	647.0566	PAVEMENT MARKING STOP LINE EPOXY 18-INCH	LF	30.000	30.000
0900	647.0656	PAVEMENT MARKING PARKING STALL EPOXY	LF	1,575.000	1,575.000

DATE 22MAR06

E S T I M A T E O F Q U A N T I T I E S

LINE NUMBER	ITEM	ITEM DESCRIPTION	UNIT	TOTAL	1002-02-72 QUANTITY
0910	647.0766	PAVEMENT MARKING CROSSWALK EPOXY 6-INCH	LF	200.000	200.000
0920	650.4000	CONSTRUCTION STAKING STORM SEWER SYSTEM	EACH	2.000	2.000
0930	650.7000	CONSTRUCTION STAKING CONCRETE PAVEMENT	LF	2,953.000	2,953.000
0940	650.8500	CONSTRUCTION STAKING ELECTRICAL INSTALLATIONS (PROJECT) 01. 1002-02-72	LS	1.000	1.000
0950	652.0225	CONDUIT RIGID NONMETALLIC SCHEDULE 40 2-INCH	LF	3,625.000	3,625.000
0960	652.0235	CONDUIT RIGID NONMETALLIC SCHEDULE 40 3-INCH	LF	320.000	320.000
0970	653.0140	PULL BOXES STEEL 24X42-INCH	EACH	8.000	8.000
0980	654.0105	CONCRETE BASES TYPE 5	EACH	27.000	27.000
0990	654.0215	CONCRETE CONTROL CABINET BASES TYPE 9	EACH	1.000	1.000
1000	655.0610	ELECTRICAL WIRE LIGHTING 12 AWG	LF	4,050.000	4,050.000
1010	655.0620	ELECTRICAL WIRE LIGHTING 8 AWG	LF	20,030.000	20,030.000
1020	657.0255	TRANSFORMER BASES STANDARD 11 1/2-INCH BOLT CIRCLE	EACH	27.000	27.000
1030	657.0320	POLES TYPE 5	EACH	27.000	27.000
1040	657.0705	LUMINAIRE ARMS TRUSS TYPE 4 1/2-INCH CLAMP 10-FT	EACH	13.000	13.000
1050	657.0715	LUMINAIRE ARMS TRUSS TYPE 4 1/2-INCH CLAMP 15-FT	EACH	14.000	14.000
1060	659.0115	LUMINAIRES UTILITY HPS 150 WATTS	EACH	27.000	27.000
1070	690.0100	SAWING EXISTING PAVEMENT	LF	48.000	48.000
1080	690.0200	SAWING CONCRETE PAVEMENT FULL DEPTH	LF	338.000	338.000
1090	SPV.0060	SPECIAL 01. BENCHES	EACH	1.000	1.000
1100	SPV.0060	SPECIAL 02. FLAG POLES	EACH	1.000	1.000
1110	SPV.0060	SPECIAL 03. FLOOD LIGHT 175-WATT MH WITH MOUNTING	EACH	1.000	1.000
1120	SPV.0060	SPECIAL 04. TRASH RECEPTACLES	EACH	1.000	1.000
1130	SPV.0060	SPECIAL 05. PERENNIALS: GOLDSTRUM BLACK-EYED SUSAN, #2 CONT .	EACH	11.000	11.000
1140	SPV.0090	SPECIAL 01. CONCRETE CURB & GUTTER 36-INCH TYPE A SPECIAL	LF	2,150.000	2,150.000
1150	SPV.0105	SPECIAL 01. REMOVING WEIGHT SCALE & PIT	LS	1.000	1.000
1160	SPV.0105	SPECIAL 02. REMOVING UNDERGROUND LP TANK	LS	1.000	1.000
1170	SPV.0105	SPECIAL 03. WELL CONSTRUCTION & PRESSURE TANKS	LS	1.000	1.000
1180	SPV.0105	SPECIAL 04. ONSITE WASTEWATER TREATMENT SYSTEM	LS	1.000	1.000
1190	SPV.0105	SPECIAL 05. TELEPHONE SERVICE, MADISON SWEF	LS	1.000	1.000
1200	SPV.0105	SPECIAL 06. ELECTRICAL SERVICE, MADISON SWEF	LS	1.000	1.000
1210	SPV.0105	SPECIAL 07. STATIC SCALE SYSTEM	LS	1.000	1.000
1220	SPV.0105	SPECIAL 08. WEIGH-IN-MOTION SYSTEM	LS	1.000	1.000
1230	SPV.0105	SPECIAL 09. COMMUNICATIONS TOWER	LS	1.000	1.000
1240	SPV.0105	SPECIAL 10. ELECTRICAL SERVICE SWEF SIGNS	LS	1.000	1.000
1250	SPV.0105	SPECIAL 11. SWEF BUILDING, GENERAL CONSTRUCTION	LS	1.000	1.000
1260	SPV.0105	SPECIAL 12. SWEF BUILDING, PLUMBING	LS	1.000	1.000
1270	SPV.0105	SPECIAL 13. SWEF BUILDING, HEATING & VENTILATING	LS	1.000	1.000
1280	SPV.0105	SPECIAL 14. SWEF BUILDING, ELECTRICAL	LS	1.000	1.000

3

CLEARING AND GRUBBING

STATION	LOCATION	(201.0120) CLEARING ID	(201.0220) GRUBBING ID
350"R"+37	44'RT	10	10
350"R"+48	44'RT	14	14
350"R"+55	44'RT	8	8
	TOTALS	32	32

REMOVING PAVEMENT

STATION - STATION	LOCATION	(204.0100) SY
339"R"+50 - 345"R"+39	EXISTING EXIT RAMP	1050
345"R"+27 - 353"R"+00	EXISTING THROUGH LANES	2410
9"S"+00 - 11"S"+03	EXISTING WEST LOOP	470
3"S"+60 - 9"S"+00	EXISTING PARKING LOT	2935
0"S"+00 - 3"S"+60	EXISTING EAST LOOP	955
353"R"+00 - 358"R"+00	EXISTING ENTRANCE RAMP	1040
306+75 - 307+30	IH 39/90 WIM	159
311+10 - 311+30	IH 39/90 LOOP	31
312+40 - 312+60	IH 39/90 LOOP	31
313+70 - 313+90	IH 39/90 LOOP	31
339+80 - 340+30	IH 39/90 LOOPS	145
USH 51	VIRTUAL WIM	200
	TOTAL	9457

REMOVING ASPHALTIC SURFACE

STATION	LOCATION	204.0110 S.Y.
CTH 'N'	VIRTUAL W.I.M.	800
	TOTAL	800

REMOVING CONCRETE SIDEWALK

STATION - STATION	LOCATION	204.0155 S.Y.
350"R"+85 - 350"R"+90	27' LT.	20
351"R"+13 - 351"R"+18	27' LT.	15
351"R"+20 - 351"R"+27	21' RT.	5
349"R"+68 (STAIRS)	26' RT.	9
	TOTAL	49

REMOVING MARKER POSTS

STATION - STATION	LOCATION	204.0180 EACH
342"R"+29 - 355"R"+12	LT.	8
0"S"+80 - 3"S"+20	LT.	12
2"S"+55 - 5"S"+40	RT.	4
9"S"+40 - 10"S"+40	LT.	4
	TOTAL	28

REMOVING SURFACE DRAINS

STATION	LOCATION	204.0190 EACH
351"R"+03	20' RT	1
	TOTAL	1

REMOVING CONCRETE BASES

STATION	LOCATION	204.0195 EACH
352"R"+19	76' LT.	1
	TOTAL	1

REMOVING UTILITY POLES

STATION - STATION	LOCATION	204.0205 EACH
341"R"+00 - 352"R"+50	LT.	8
351"R"+00	21' RT.	1
0"S"+39	5' RT.	1
4"S"+40	5' RT.	1
	TOTAL	11

REMOVING INLETS

STATION	LOCATION	204.0220 EACH
2"S"+37	1' RT.	1
9"S"+14	1' RT.	1
	TOTAL	2

REMOVING PULL BOXES

STATION	LOCATION	204.9060.S EACH
351"R"+02	48'LT.	1
	TOTAL	1

MISC. REMOVALS

STATION	LOCATION	204.0230 REMOVING BUILDING STA. LS	SPV.0105.01 REMOVING WEIGHT SCALE & PIT LS	SPV.0105.02 REMOVING UNDERGROUND LP TANK LS
351'R'+00	LT.	1	1	-
351'R'+30	LT.	-	-	1
	TOTALS	1	1	1

3

BASE AGGREGATE DENSE 3/4-INCH

STATION - STATION	LOCATION	305.0110 TON
339"R"+50 - 345"R"+39	EXIT RAMP	592
345"R"+28 - 353"R"+00	THROUGH LANES	890
353"R"+00 - 358"R"+00	ENTRANCE RAMP	583
0"S"+00 - 3"S"+92	EAST LOOP	165
3"S"+36 - 9"S"+26	TRUCK PARKING AREA	1764
8"S"+70 - 11"S"+03	WEST LOOP	143
2"S"+41 - 3"S"+50	PARKING LANE	13
	TOTAL	4150

CONCRETE PAVEMENT

STATION - STATION	LOCATION	415.1110 11-INCH S.Y.	415.1150.S FAST TRACK 11-INCH S.Y.
339"R"+50 - 345"R"+39	EXIT RAMP	1126	--
345"R"+28 - 353"R"+00	THROUGH LANES	2368	--
353"R"+00 - 358"R"+00	ENTRANCE RAMP	1402	--
0"S"+00 - 3"S"+92	EAST LOOP	727	--
3"S"+36 - 9"S"+26	TRUCK PARKING AREA	5763	--
8"S"+70 - 11"S"+03	WEST LOOP	533	--
2"S"+41 - 3"S"+50	PARKING LANE	56	--
306+75 - 307+30	IH 39/90 WIM	--	159
311+10 - 311+30	IH 39/90 LOOP	--	31
312+40 - 312+60	IH 39/90 LOOP	--	31
313+70 - 313+90	IH 39/90 LOOP	--	31
339+80 - 340+30	IH 39/90 LOOPS	--	145
CTH "N"	VIRTUAL WIM	--	800
USH 51	VIRTUAL WIM	--	200
	TOTALS	11,975	1,397

CONCRETE PAVEMENT CONTINUOUS REINFORCEMENT

STATION - STATION	LOCATION	415.5105 S.Y.
349"R"+46 - 350"R"+26	WEST SCALE APPROACH	266
350"R"+26 - 352"R"+29	BYPASS LANE	339
351"R"+49 - 352"R"+29	EAST SCALE APPROACH	266
	TOTAL	871

CONCRETE PAVEMENT APPROACH SLAB

STATION - STATION	LOCATION	416.0050 S.Y.
350"R"+26 - 350"R"+46	WEST APPROACH PAVEMENT	33.5
351"R"+29 - 351"R"+49	EAST APPROACH PAVEMENT	33.5
	TOTAL	67

CONCRETE DRIVEWAY, 6-INCH

STATION - STATION	LOCATION	416.0160 S.Y.
351"R"+75 - 352"R"+09	25'RT.	48
	TOTAL	48

PAVEMENT TIES & PAVEMENT DOWEL BARS

STATION	LOCATION	416.0610 PAVEMENT TIES EACH	416.0620 PAVEMENT DOWEL BARS EACH
339"R"+50	EXIT RAMP	--	15
358"R"+00	ENTRANCE RAMP	--	15
306+75	IH 39/90 WIM	--	25
307+30	IH 39/90 WIM	--	25
311+10	IH 39/90	6	12
311+30	IH 39/90	--	12
312+40	IH 39/90	6	12
312+60	IH 39/90	--	12
313+70	IH 39/90	6	12
313+90	IH 39/90	--	12
339+80	IH 39/90	--	25
340+30	IH 39/90	--	25
USH 51	VIRTUAL WIM	--	56
	TOTALS	18	258

ASPHALTIC PAVEMENT

STATION - STATION	LOCATION	455.0105 ASPHALTIC MATERIAL PG 58-28 TON	455.0605 TACK COAT GAL	460.1100 HMA PAVEMENT E-0.3 TON	460.3000 OMP HMA MIXTURE TON
339"R"+50 - 345"R"+39	LT. SHOULDER	6.0	8.3	99	99
339"R"+50 - 345"R"+39	RT. SHOULDER	6.0	8.3	99	99
345"R"+27 - 353"R"+00	LT. SHOULDER	7.8	11.0	130	130
350"R"+67 - 351"R"+35	LT. PARKING AREA	2.2	3.2	36	36
353"R"+00 - 358"R"+00	LT. SHOULDER	5.0	7.1	84	84
353"R"+00 - 358"R"+00	RT. SHOULDER	5.0	7.1	84	84
	TOTAL	32	45	532	532

CONCRETE SIDEWALK, 5-INCH

STATION - STATION	LOCATION	602.0410 S.F.
351"R"+17 - 351"R"+98	NORTH WALKWAYS	645
351"R"+82	EAST WALKWAY	139
2"S"+66 - 3"S"+59	SOUTH WALKWAYS	672
3"S"+60 - 4"S"+47	WEST WALKWAYS	724
	TOTAL	2180

CONCRETE SURFACE DRAINS

STATION	LOCATION	416.1010 C.Y.
6"S"+40	136'LT.	3
8"S"+00	136'LT.	3
	TOTAL	6

CURB RAMP DETECTABLE WARNING FIELD YELLOW

STATION	LOCATION	602.0505 S.Y.
4'S'+44	6' RT.	16
	TOTAL	16

STEEL PLATE BEAM GUARD

STATION - STATION	614.0305 STEEL PLATE BEAM GUARD CLASS A LF	614.0370 ENERGY ABSORBING TERMINAL EACH
304+94 - 307+06 RT.	212	-
304+44 RT.	--	1
311+44 - 313+56 RT.	212	-
310+94 RT.	--	1
TOTALS	424	2

SILT FENCE

STATION - STATION	628.1504 SILT FENCE LF	628.1520 SILT FENCE MAINTENANCE LF
344"R"+00 RT - 344"R"+80 RT	104	104
3"S"+00 LT - 10"S"+00 LT	816	816
347"R"+60 LT - 350"R"+40 LT	280	280
UNDISTRIBUTED	100	100
TOTALS	1300	1300

INLET PROTECTION TYPE A

STATION	LOCATION	628.7005 EACH
2"S"+18	41'RT.	1
2"S"+37	1'RT.	1
2"S"+94	7'RT.	1
9"S"+14	1'RT.	1
9"S"+29	1'RT.	1
	TOTAL	5

SALVAGED TOPSOIL, MULCHING, FERTILIZER, & SOD

STATION - STATION	625.0500 SALVAGED TOPSOIL S.Y.	627.0200 MULCHING S.Y.	629.0210 FERTILIZER TYPE B CWT.	630.0130 SEEDING MIXTURE NO.30 LB.	630.0140 SEEDING MIXTURE NO.40 LB.	631.1000 SOD LAWN S.Y.	631.1100 SOD EROSION CONTROL S.Y.
INSIDE EAST LOOP	540	540	0.4	--	11	--	--
340"R"+50 LT - 357"R"+50 LT	2650	2650	1.7	53	-	--	--
339"R"+50 RT - 345"R"+40 RT	1020	1020	0.7	21	-	--	--
351"R"+00 RT - 358"R"+00 RT	1050	1050	0.7	21	-	--	--
0"S"+75 LT - 10"S"+00 LT	2140	2140	1.4	43	-	--	--
INSIDE WEST LOOP	490	490	0.4	10	-	--	--
NORTHWEST LAWN	580	--	--	--	-	580	--
354"R"+40 RT - 356"R"+40 RT	--	--	--	--	-	--	140
UNDISTRIBUTED	2130	1910	1.7	42	3	150	40
TOTALS	10,600	9800	7.0	190	14	730	180

WALL MODULAR BLOCK GRAVITY

LOCATION	532.0200.S S.F.
ALONG NORTHWEST SIDEWALK	144

SAWING EXISTING PAVEMENT & SAWING CONCRETE PAVEMENT FULL DEPTH

STATION	690.0100 SAWING EXISTING PAVEMENT LF	690.0200 SAWING CONC. PAV'T. FULL DEPTH LF
339"R"+50	-	44
358"R"+00	-	46
306+75	-	26
307+30	-	26
311+10	-	14
311+30	-	14
312+40	-	14
312+60	-	14
313+70	-	14
313+90	-	14
339+80	-	26
340+30	-	26
USH 51 VIRTUAL WIM	-	60
CTH 'N' VIRTUAL WIM	48	-
TOTAL	48	338

CONCRETE CURB & GUTTER 36-INCH TYPE A SPECIAL

STATION - STATION	LOCATION	SPV 0090.01 LF
345"R"+97 - 352"R"+36	RT.	639
0"S"+00 - 11"S"+03	RT.	1103
3"S"+92 - 8"S"+00	LT.	408
TOTAL		2150

BENCHES, FLAG POLES, FLOOD LIGHT & TRASH RECEPTACLES

STATION	LOCATION	SPV.0060.01 BENCHES EACH	SPV.0060.02 FLAG POLES EACH	SPV.0060.03 FLOOD LIGHT 175-WATT W/ MOUNTING EACH	SPV.0060.04 TRASH RECEPTACLES EACH
3'S'+70	26' RT.	1	-	-	-
3'S'+66	32' RT.	-	1	1	-
3'S'+75	22' RT.	-	-	-	1
	TOTALS	1	1	1	1

CONCRETE STEPS

STATION	LOCATION	602.1500 S.F.
3"S"+25	18'RT.	50
3"S"+80	14'RT.	80
	TOTAL	130

RIPRAP MEDIUM & GEOTEXTILE FABRIC, TYPE R

STATION	LOCATION	606.0200 RIPRAP MEDIUM CY	645.0130 GEOTEXTILE FABRIC TYPE R SY
6"S"+40	LT.	2	20
8"S"+00	LT.	2	22
	TOTALS	4	42

STORM SEWER PIPE REINFORCED CONCRETE, CLASS III, 15-INCH

STATION - STATION	LOCATION	608.0315 L.F.
2"S"+37 - 2"S"+94	RT.	56
9"S"+14 - 9"S"+29	RT.	14
	TOTAL	70

INLETS & INLET COVERS

STATION	LOCATION	611.0303 INLETS TYPE 3 EACH	611.0639 INLET COVERS TYPE H-S EACH
2"S"+37	1' RT.	1	1
2"S"+94	7' RT.	1	1
9"S"+14	1' RT.	1	1
9"S"+29	1' RT.	1	1
	TOTALS	4	4

SITE LIGHTING

POLE NUMBER	654.0105 CONCRETE BASES TYPE 5 EACH	657.0255 TRANSFORMER BASES 11 1/2-INCH BOLT CIRCLE EACH	657.0320 POLES TYPE 5 EACH	657.0705 LUMINAIRE ARMS TRUSS TYPE 4½-INCH CLAMP 10-FT EACH	657.0715 LUMINAIRE ARMS TRUSS TYPE 4½-INCH CLAMP 15-FT EACH	659.0115 LUMINAIRES HPS 150 WATTS EACH	655.0610 ELECTRICAL WIRE LIGHTING 12 AWG LF
L-13-0627-1	1	1	1	1		1	140'
L-13-0627-2	1	1	1	1		1	140'
L-13-0627-3	1	1	1	1		1	140'
L-13-0627-4	1	1	1	1		1	140'
L-13-0627-5	1	1	1	1		1	155'
L-13-0627-6	1	1	1	1		1	155'
L-13-0627-7	1	1	1		1	1	155'
L-13-0627-8	1	1	1		1	1	155'
L-13-0627-9	1	1	1		1	1	155'
L-13-0627-10	1	1	1		1	1	155'
L-13-0627-11	1	1	1		1	1	155'
L-13-0627-12	1	1	1		1	1	155'
L-13-0627-13	1	1	1		1	1	155'
L-13-0627-14	1	1	1		1	1	155'
L-13-0627-15	1	1	1	1		1	140'
L-13-0627-16	1	1	1	1		1	140'
L-13-0627-17	1	1	1	1		1	140'
L-13-0627-18	1	1	1	1		1	140'
L-13-0627-19	1	1	1		1	1	155'
L-13-0627-20	1	1	1		1	1	155'
L-13-0627-21	1	1	1		1	1	155'
L-13-0627-22	1	1	1	1		1	140'
L-13-0627-23	1	1	1		1	1	155'
L-13-0627-24	1	1	1		1	1	155'
L-13-0627-25	1	1	1		1	1	155'
L-13-0627-26	1	1	1	1		1	155'
L-13-0627-27	1	1	1	1		1	155'
TOTAL	27	27	27	13	14	27	4050'

CONDUIT SCHEDULE

LOCATION	652.0225 RIGID NON-METALLIC SCHEDULE 40 2-INCH LF	652.0235 RIGID NON-METALLIC SCHEDULE 40 3-INCH LF
CB-1 TO PB-1	20'	20'
PB-1 TO PB-2	--	250'
PB-2 TO PB-3	--	50'
PB-3 TO L13-0627-8	120'	
L-13-0627-8 TO L-13-0627-7	132'	
L-13-0627-7 TO L-13-0627-6	130'	
L-13-0627-6 TO L-13-0627-5	135'	
L-13-0627-5 TO PB-4	110'	
PB-4 TO PB-5	35'	
PB-5 TO L-13-0627-4	30'	
L-13-0627-4 TO L 13-0627-3	135'	
L-13-0627-3 TO L-13-0627-2	138'	
L-13-0627-2 TO L-13-0627-1	118'	
PB-3 TO L-13-0627-9	20'	
L-13-0627-9 TO L-13-0627-10	139'	
L-13-0627-10 TO L-13-0627-11	133'	
L-13-0627-11 TO L-13-0627-12	135'	
L-13-0627-12 TO L-13-0627-13	140'	
L-13-0627-13 TO PB-6	105'	
PB-6 TO PB-7	50'	
PB-7 TO L-13-0627-14	35'	
L-13-0627-14 TO L-13-0627-15	137'	
L-13-0627-15 TO L-13-0627-16	134'	
PB-1 TO L-13-0627-26	120'	
L-13-0627-26 TO L-13-0627-27	145'	
PB-1 TO L-13-0627-21	153'	
L-13-0627-21 TO L-13-0627-20	130'	
L-13-0627-20 TO L-13-0627-19	138'	
L-13-0627-19 TO L-13-0627-18	140'	
L-13-0627-18 TO L-13-0627-17	140	
PB-1 TO PB-8	50'	
PB-8 TO L-13-0627-25	170'	
L-13-0627-25 TO L-13-0627-24	172'	
L-13-0627-24 TO L-13-0627-23	136'	
TOTALS	3,625	320

WIRE SCHEDULE

LOCATION	NUMBER OF CONDUCTORS	655.0620 ELECTRICAL WIRE LIGHTING 8AWG BLACK	RED	BLUE	BROWN	GREEN
CB-1 TO L-13-0627-8	5	920	920			460
L-13-0627-8 TO L-13-0627-7	5	284	284			142
L-13-0627-7 TO L-13-0627-6	5	280	280			140
L-13-0627-6 TO L-13-0627-5	5	290	290			145
L-13-0627-5 TO L-13-0627-4	5	390	390			195
L-13-0627-4 TO L-13-0627-3	5	290	290			145
L-13-0627-3 TO L-13-0627-2	5	296	296			148
L-13-0627-2 TO L-13-0627-1	3	256	--			128
CB-1 TO L-13-0627-9	5	700	700			350
L-13-0627-9 TO L-13-0627-10	5	286	286			143
L-13-0627-10 TO L-13-0627-11	5	290	290			145
L-13-0627-11 TO L-13-0627-12	5	300	300			150
L-13-0627-12 TO L-13-0627-13	5	300	300			150
L-13-0627-13 TO L-13-0627-14	5	440	440			220
L-13-0627-14 TO L-13-0627-15	5	294	294			147
L-13-0627-15 TO L-13-0627-16	5	288	288			144
CB-1 TO L-13-0627-26	3				320	160
L-13-0627-26 TO L-13-0627-27	3				310	155
CB-1 TO L-13-0627-22	3			386		193
L-13-0627-22 TO L-13-0627-21	3			280		190
L-13-0627-21 TO L-13-0627-20	3			280		140
L-13-0627-20 TO L-13-0627-19	3			296		148
L-13-0627-19 TO L-13-0627-18	3			300		150
L-13-0627-18 TO L-13-0627-17	3			300		150
CB-1 TO L-13-0627-25	3				520	260
L-13-0627-25 TO L-13-0627-24	3				364	182
L-13-0627-24 TO L-13-0627-23	3				292	146
TOTALS		5,904	5,652	1,842	1,806	4,826

TOTAL = 20,030

CONCRETE CONTROL BASE TYPE 9

NO.	STATION	LOCATION	654.0215 EACH
CB-1	3'S'+42	8' RT.	1

METERBREAKER PEDESTAL - WISDOT INSTALLED

LIGHTING CONTROL CABINET - WISDOT-PROVIDED/INSTALLED

PULL BOXES

PULL BOX NO.	STATION	LOCATION	653.0140 24X42-INCH EACH
PB-1	3'S'+50	6'RT	1
PB-2	348'R'+80	25'RT	1
PB-3	348'R'+80	25'LT	1
PB-4	342'R'+65	25'LT	1
PB-5	342'R'+65	15'RT	1
PB-6	355'R'+50	25'LT	1
PB-7	355'R'+50	25'RT	1
PB-8	3'S'+40	35'LT	1
TOTAL			8

TRAFFIC CONTROL SIGNS
PORTABLE CHANGEABLE MESSAGE

PHASE	SIGNS	DAYS EACH	643.1050.S DAYS
ADVANCE NOTICE OF MAINLINE WIM INSTALLATION	2	5	10
DURING MAINLINE WIM INSTALLATION	2	10	20
USH 51 VIRTUAL WIM INSTALLATION	2	5	10
CTH N VIRTUAL WIM INSTALLATION	2	5	10
		TOTAL	50

SIGNS TYPE 1

STATION	SIGN CODE	SIZE	637.0101 SIGNS TYPE I SF	POST TYPE	636.0100 SIGN SUPPORT CONCRETE MASONRY CY	636.1000 SIGN SUPPORTS STEEL REINFORCEMENT HS LB	635.0200 SIGN SUPPORTS STRUCTURAL STEEL HS LB	SIGN MESSAGE
230+70 RT	E5-56A	108"X72"	54	2A	1.2	68	550	WEIGH STATION 2 MILES
283+50 RT	E5-56A	108"X72"	54	USE EXISTING SUPORTS		--	--	WEIGH STATION 1 MILE
297+75 RT	R13-1	144"X66"	66	USE EXISTING SUPORTS		--	--	TRUCKS OVER 4 TONS STOP AT WEIGH STATION
		TOTALS	174		1.2	68	550	

PAVEMENT MARKING, EPOXY

STATION - STATION	646.0106 EDGELINE 4-INCH (WHITE) LF	646.0106 EDGELINE 4-INCH (YELLOW) LF	647.0256 SYMBOLS (YELLOW) EACH	647.0566 STOPLINE 18-INCH (WHITE) LF	647.0656 PARKING STALL 4-INCH (YELLOW) LF	647.0766 CROSSWALK 6-INCH (YELLOW) LF
339"R"+50 - 358"R"+00 LT	--	1850				
339"R"+50 - 345"R"+40 RT	590	--				
345"R"+97 - 352"R"+36 RT	639	--				
353"R"+00 - 358"R"+00 RT	500	--				
339"R"+50 - 358"R"+00 CL	618	--				
0"S"+00 - 11"S"+03 RT	1103	--				
0"S"+50 - 10"S"+50 LT	--	1050				
4"S"+00 - 6"S"+50 LT			5			
4"S"+00 - 9"S"+00 LT					1530	
351"R"+94 RT					21	
2"S"+66 - 3"S"+24 RT					24	
350"R"+39 RT				15		
350"R"+44 - 351"R"+29 RT						200
351"R"+24 RT				15		
WIM LOCATIONS	900	250				
TOTALS	4350	3150	5	30	1575	200
	TOTAL - 7500					

SIGNS REFLECTIVE TYPE II

STATION	SIGN CODE	SIZE	637.0202 SIGNS REFLECTIVE TYPE II SF	634.0614 WOOD POSTS 4"X 6"X 14FT EACH	SIGN MESSAGE
239+00 RT	R4-5	48"X60"	20.00	1	TRUCKS USE RIGHT LANE
239+00 LT	R4-5	48"X60"	20.00	1	TRUCKS USE RIGHT LANE
342"R"+00 LT	R5-1A	36"X24"	6.00	1	WRONG WAY
342"R"+00 RT	R5-1A	36"X24"	6.00	1	WRONG WAY
343"R"+00 RT	R2-1	24"X30"	5.00	1	SPEED LIMIT 25
344"R"+50 RT	R5-1	30"X30"	6.25	1	DO NOT ENTER
345"R"+60 LT	R3-2	30"X30"	6.25	1	NO LEFT TURN
350"R"+40 RT	R1-1	36"X36"	9.00	1	STOP
353"R"+50 LT	W4-2R	36"X36"	9.00	1	RIGHT LANE ENDS
353"R"+50 RT	W4-2R	36"X36"	9.00	1	RIGHT LANE ENDS
0"S"+60 LT	D52-50	48"X24"	8.00	1	EXIT /PARKING
1"S"+08 LT	R7-1	18"X24"	3.00	1	NO PARKING ANY TIME
2"S"+42 LT	R7-1	18"X24"	3.00	1	NO PARKING ANY TIME
3"S"+00 LT	R5-1	36"X36"	9.00	1	DO NOT ENTER
3"S"+92 LT	R7-1D	12"X18"	1.50	1	NO PARKING ANY TIME
6"S"+05 LT	R7-1D	12"X18"	1.50	1	NO PARKING ANY TIME
6"S"+50 RT	R6-2L	24"X30"	5.00	1	ONE WAY
7"S"+65 LT	R7-1L	12"X18"	1.50	1	NO PARKING ANY TIME
7"S"+80 RT	R6-2L	24"X30"	5.00	1	ONE WAY
10"S"+40 LT	R1-2	36"X31"	3.88	1	YIELD
10"S"+55 RT	R1-2	36"X31"	3.88	1	YIELD
		TOTAL	142.00	21	

CONSTRUCTION STAKING

STATION - STATION	650.4000 STORM SEWER SYSTEM EACH	650.7000 CONCRETE PAVEMENT LF	650.8500 ELECTRICAL INSTALLATIONS LS
2"S"+37 - 2"S"+94	1	--	-
9"S"+14 - 9"S"+29	1	--	-
339"R"+50 - 358"R"+00	-	1850	-
0"S"+00 - 11"S"+03	-	1103	-
PROJECT	-	--	1
TOTAL	2	2953	1

REMOVING SIGNS

STATION - STATION	638.2601 REMOVING SIGNS TYPE I EACH	638.2602 REMOVING SIGNS TYPE II EACH	638.3000 REMOVING SIGN SUPPORTS EACH
283+70 RT	1	-	-
297+75 RT	1	-	-
339"R"+50 - 358"R"+00	-	5	5
0"S"+00 - 11"S"+00	-	4	4
TOTALS	2	9	9

TRAFFIC CONTROL

STATION - STATION	LOCATION	643.0300 DRUMS NO.	643.0300 DRUMS DAYS	643.0420 BARRICADES TYPE III NO.	643.0420 BARRICADES TYPE III DAYS	643.0705 WARNING LIGHTS TYPE A NO.	643.0705 WARNING LIGHTS TYPE A DAYS	643.0715 WARNING LIGHTS TYPE C NO.	643.0715 WARNING LIGHTS TYPE C DAYS	643.0900 SIGNS NO.	643.0900 SIGNS DAYS	643.0905.S COVERING SIGNS EACH	643.0800 ARROW BOARDS DAYS	COMMENTS
329+50 - 341+00	EXIT RAMP CLOSURE	26	7410	4	1140	8	2280			5	1425	2*		SPACE DRUMS AT 50'
357+00 - 369+00	ENTRANCE RAMP CLOSURE	26	7410							2	570			SPACE DRUMS AT 50'
285+00 - 341+00	MAINLINE WIM INSTALLATION	112	1120	1	10	2	10	16	160	8	80		20	DURATION=10 DAYS
USH 51	VIRTUAL WIM INSTALLATION									10	50			USE W20-7B
CTH N	VIRTUAL WIM INSTALLATION									10	50			USE W20-7B
	TOTALS		15,940		1150		2290		160		2175	2*	20	

*COVER OPEN/CLOSED SIGNS

DELINEATOR & DELINEATOR POSTS

STATION - STATION	LOCATION	633.0100 DELINEATOR POSTS EACH	633.0500 DELINEATORS WHITE EACH	633.0500 DELINEATORS YELLOW EACH
341"R"+00 - 357"R"+00	LT	16	--	16
331"R"+50 - 338"R"+50	RT	8	16	--
339"R"+50 - 357"R"+50	RT	16	16	--
358"R"+50 - 368"R"+50	RT	11	22	--
0"S"+75 - 10"S"+25	LT	20	20	--
	TOTALS	71	74	16
			TOTAL - 90	

EARTHWORK

STATION - STATION	LOCATION	205.0100 COMMON EXCAVATION CY	EXPANDED FILL CY	WASTE CY
339"R"+50 - 358"R"+00	"R" LINE	2258	1045	1213
0"S"+00 - 11"S"+02	"S" LINE	2534	1379	1155
	EBS	208	--	--
	TOTAL	5000	2424	2368

NOTE: FILL EXPANSION FACTOR - 30%

B-13-161

I 39/90-W.B.

304 306 308 310 312 314 316 318 320 322

B-13-160

I 39/90-E.B.

CMS CMS

STEEL PLATE BEAM
GUARD CLASS 'A' W/
ENERGY ABSORBING TERMINAL
STA 304+44 - STA 307+06

WIM/PREPASS SYSTEM
SEE SETAILS

STEEL PLATE BEAM
GUARD CLASS 'A' W/
ENERGY ABSORBING TERMINAL
STA 310+94 - STA 313+56

CTH 'MN'

42 40 38 36

5

5

CTH 'MN'

44 42

WALLS

SEPTIC

PC 323+60.55

322 324 326 328 330 332 334 336 338

I 39/90-W.B.

I 39/90-E.B.

PT 339+23.88

PI 337R+00.00
STA 337+00.00
38' RT.

PI 337R+87.83
STA 337+87.00
44' RT.

PC 338R+80.99

PI- 331+42.20
D - 1°-00'
I - 15°-44'-00"
R - 5729.58'
T - 791.65'
L - 1573.33'

STA 331+00
BEGIN TAPER

PI 331+42.20

0 60 120 180
FEET
SCALE

PROJECT NO: 1002-02-72	HWY: IH 39/90	COUNTY: DANE	PLAN	SHEET NO: 107	E

FILE NAME : c:\Users\P\De\SWEFIG\PlanProfile0.DGN PLOT DATE : 17-MAR-2006 12:31 PLOT BY : DOTRES PLOT NAME: PlanProfile0.dgn PLOT SCALE : 120.000000:1.000000

BENCH MARKS

NO.	STATION	DESCRIPTION	ELEV.
341	341+90	CHSLD + ON C.M.C.P. LT.	883.22

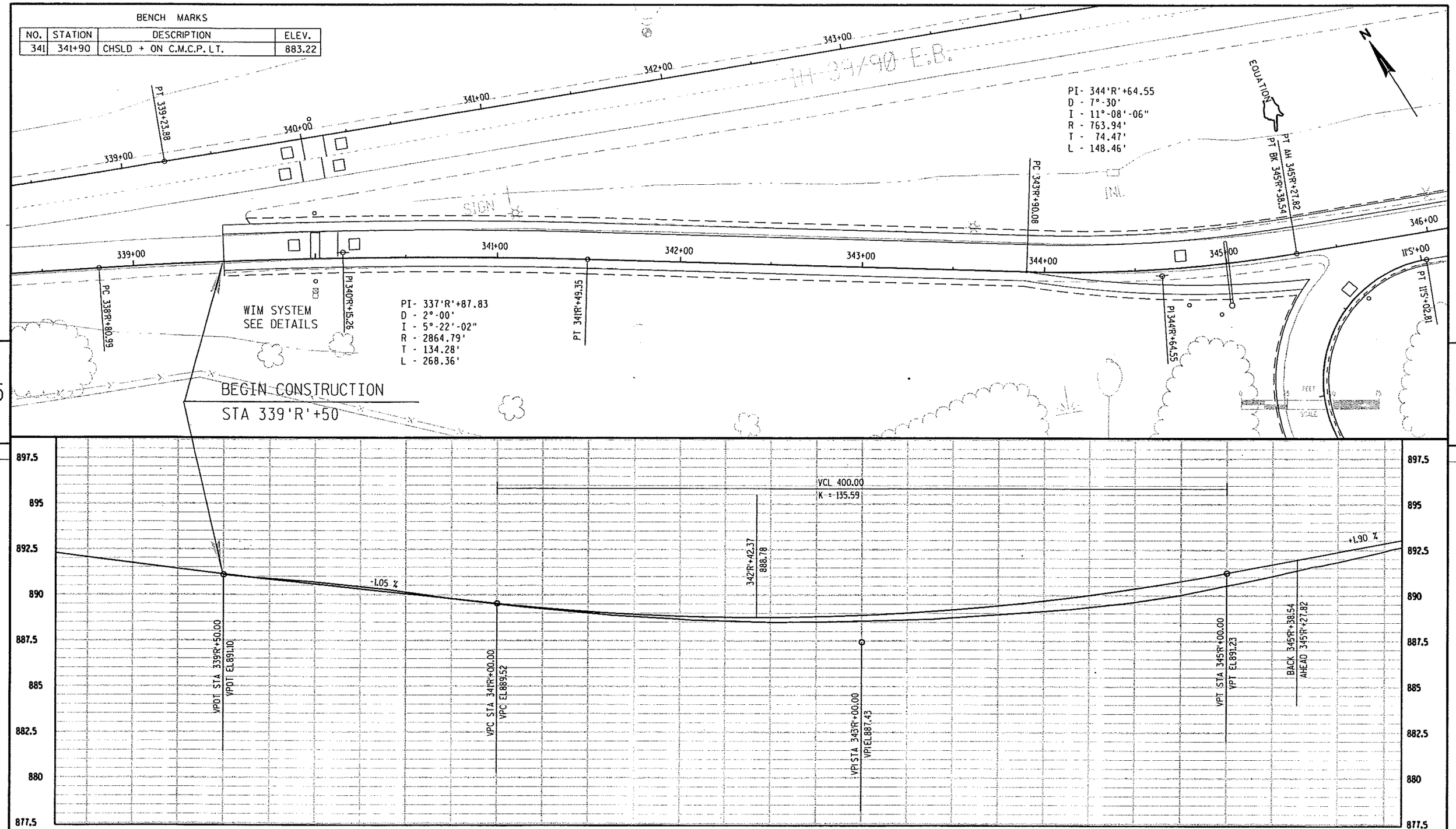

PROJECT NO: 1002-02-72	HWY: IH 39/90	COUNTY: DANE	PLAN & PROFILE	SHEET NO: 108	E

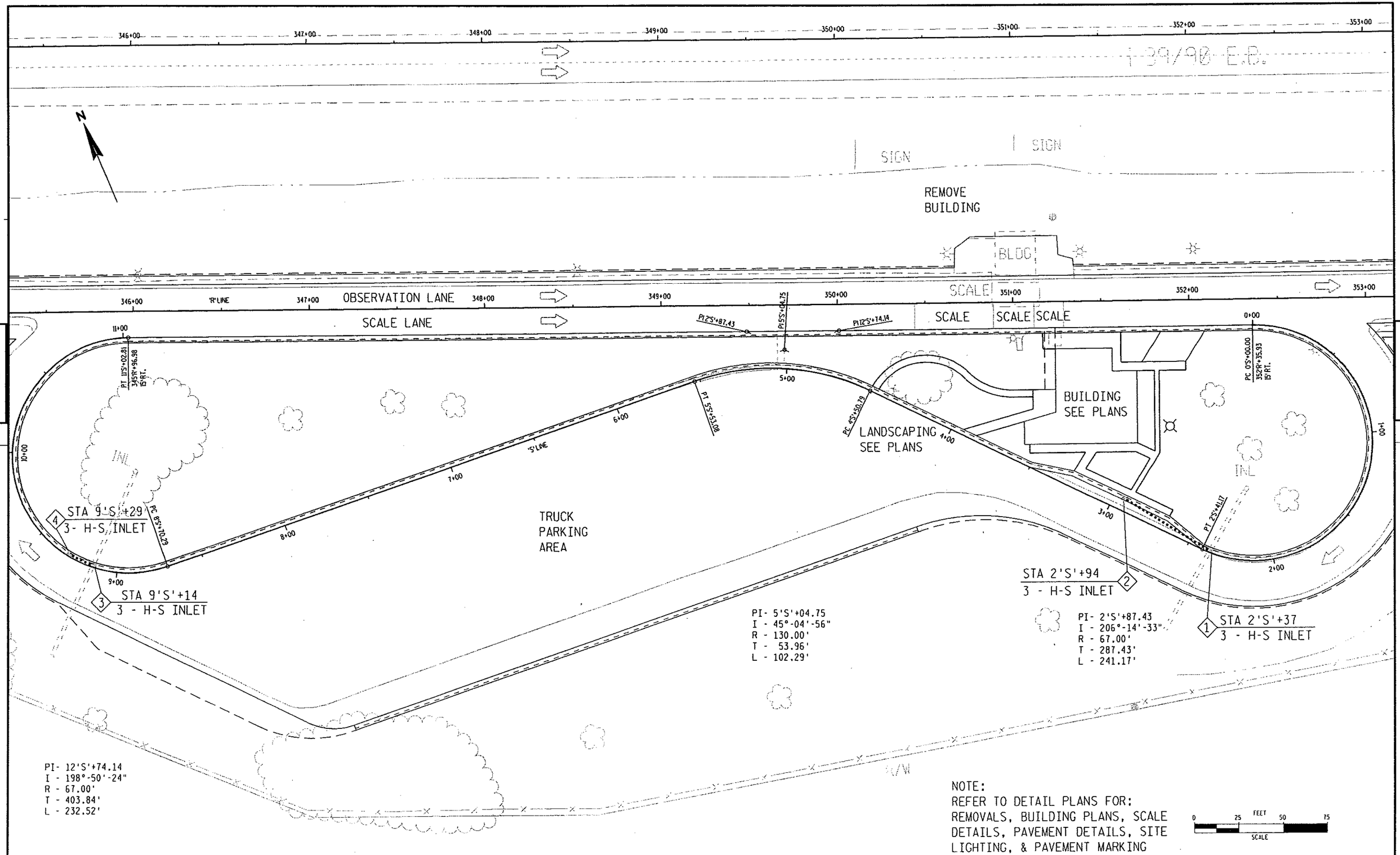

5

5

PROJECT NO: 1002-02-72	HWY: IH 39/90	COUNTY: DANE	PLAN	SHEET NO: 109	E

FILE NAME : c:\Users\P\De\SWEF16\PlanProfile4.DGN PLOT DATE : 20-MAR-2006 13:17 PLOT BY : DOTRES PLOT NAME: PlanProfile4.dgn PLOT SCALE : 50:1

BENCH MARKS

NO.	STATION	DESCRIPTION	ELEV.
371	371+00	CHSLD + ON C.M.C.P.LT.	876.25

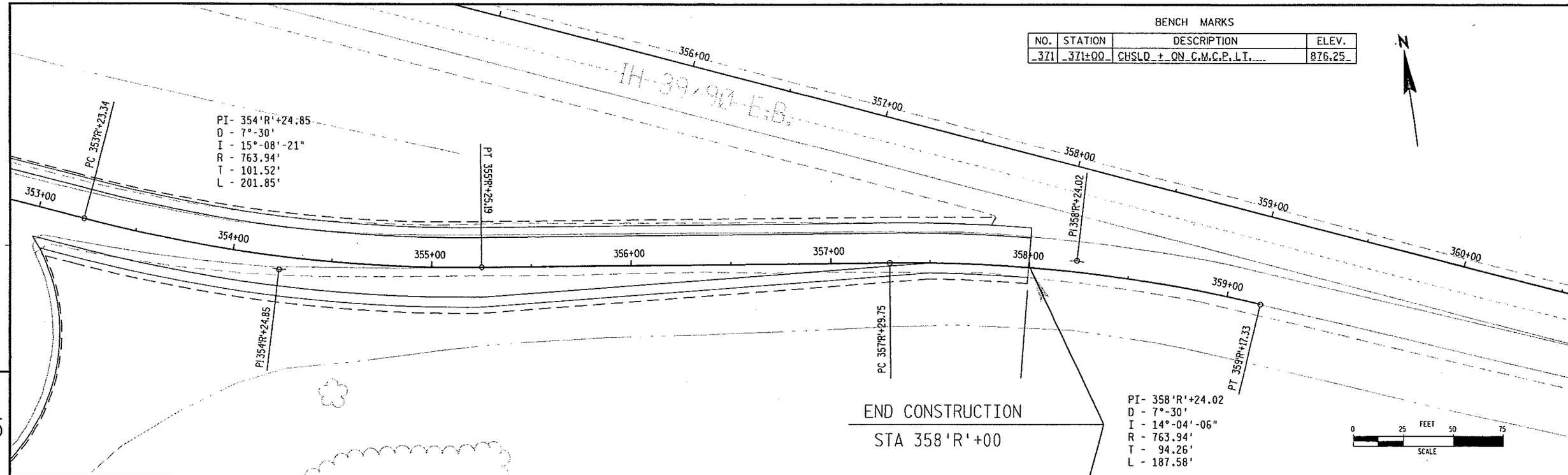

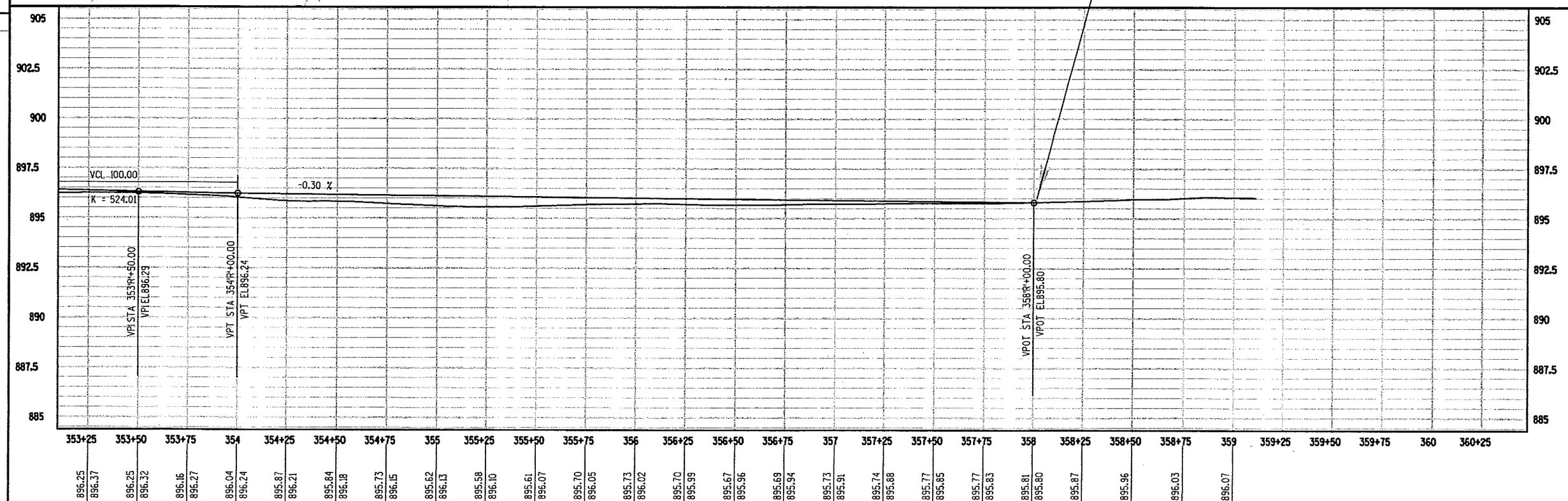

PROJECT NO: 1002-02-72	HWY: IH 39/90	COUNTY: DANE	PLAN & PROFILE	SHEET NO: 110	E

346+00 347+00 348+00 349+00 350+00 351+00 352+00 353+00

I 39/90 E.B.

N

SIGN

SIGN

REMOVE
BUILDING

BLDG

SCALE

OBSERVATION LANE

'R' LINE

SCALE LANE

SCALE SCALE SCALE

PI 2'S'+87.43

PI 5'S'+04.75

PI 12'S'+74.14

PT 11'S'+20.18

PC 0'S'+00.00

BUILDING
SEE PLANS

PT 5'S'+53.08

PC 4'S'+50.79

'S' LINE

STA 9'S'+29
3- H-S INLET

PC 8'S'+70.29

TRUCK
PARKING
AREA

STA 9'S'+14
3 - H-S INLET

STA 2'S'+94
3 - H-S INLET

PT 2'S'+41.17

STA 2'S'+37
3 - H-S INLET

PI- 5'S'+04.75
I - 45°-04'-56"
R - 130.00'
T - 53.96'
L - 102.29'

PI- 2'S'+87.43
I - 206°-14'-33"
R - 67.00'
T - 287.43'
L - 241.17'

PI- 12'S'+74.14
I - 198°-50'-24"
R - 67.00'
T - 403.84'
L - 232.52'

NOTE:
REFER TO DETAIL PLANS FOR:
REMOVALS, BUILDING PLANS, SCALE
DETAILS, PAVEMENT DETAILS, SITE
LIGHTING, & PAVEMENT MARKING

0 25 FEET 50 75
SCALE

PROJECT NO: 1002-02-72	HWY: IH 39/90	COUNTY: DANE	PLAN	SHEET NO: 111	E

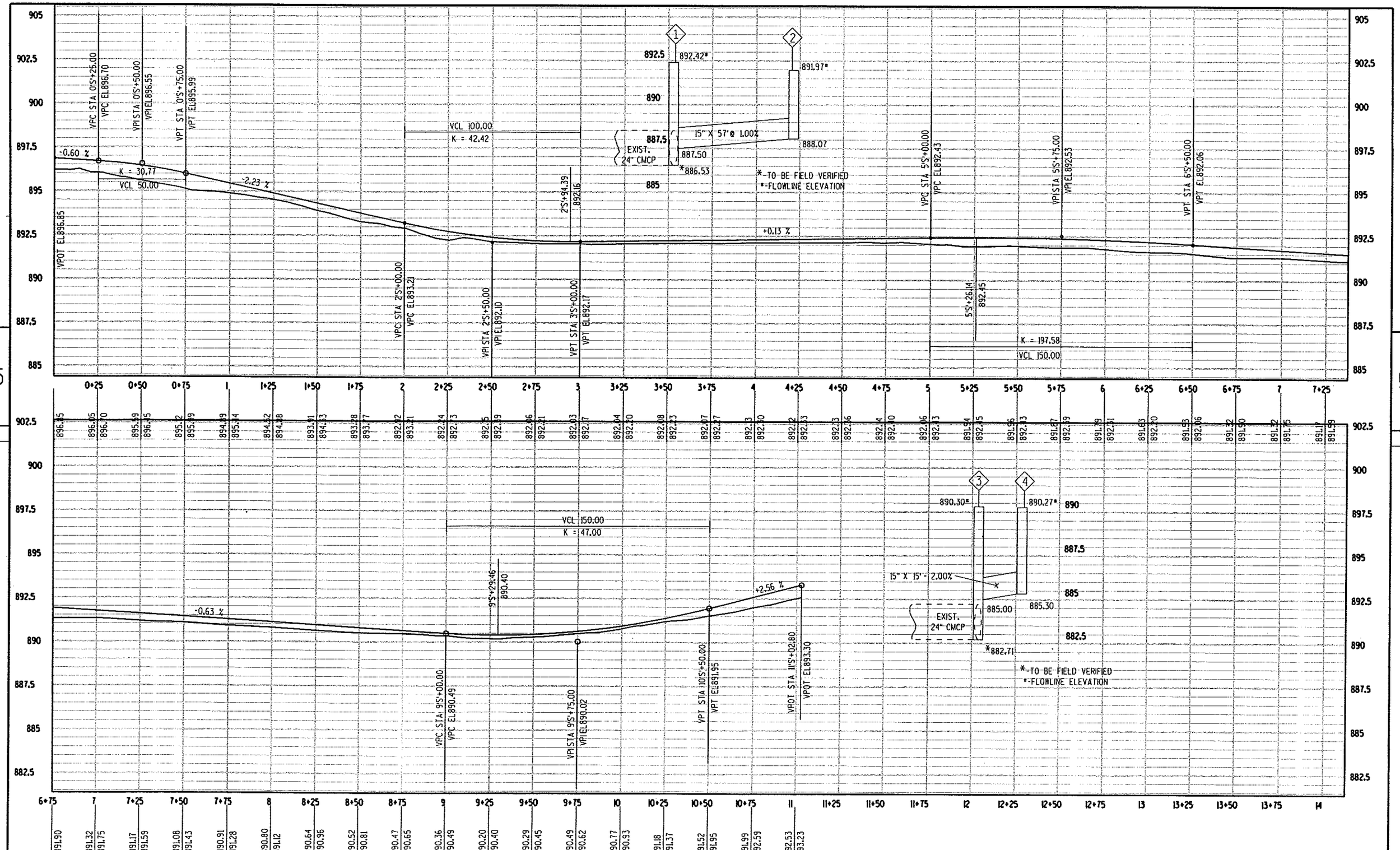

PROJECT NO: 1002-02-72	HWY: IH 39/90	COUNTY: DANE	PROFILE - 'S' LINE	SHEET NO: 112	E

FILE NAME : C:\Users\P\De\SWEF16\PlanProfile5.DGN PLOT DATE : 09-MAR-2006 16:04 PLOT BY : DOTRES PLOT NAME: PlanProfile5.dgn PLOT SCALE : 50:1

NOTE:
GRATE IS REVERSIBLE.

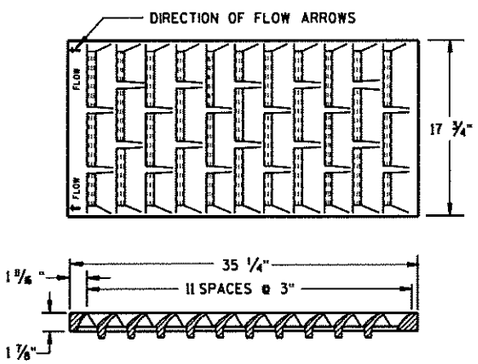

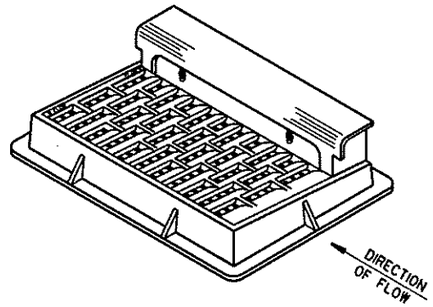

NOTE: CURB BOX HEIGHT ADJUSTABLE 6" TO 9"

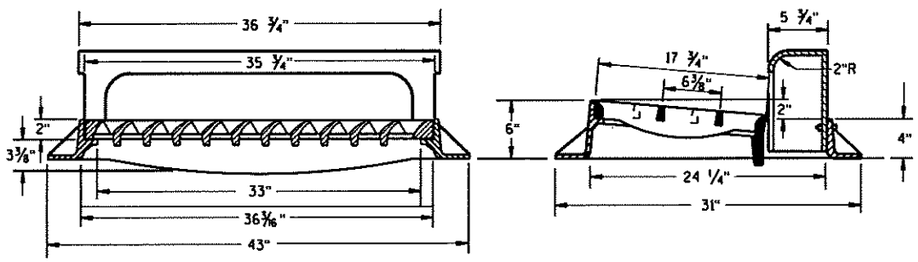

TYPE "H"

(APPROXIMATE WEIGHT 422 LBS.)
FRAME..... 175 LBS.
GRATE..... 138 LBS.
CURB BOX..... 109 LBS.

1 ⅛" DIAGONAL BARS WITH 1 ⅝" OPENINGS

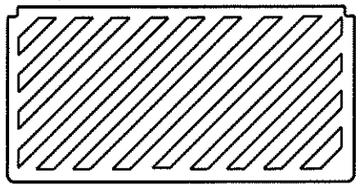

SPECIAL GRATE FOR TYPE "H" COVER

(MEASURES 35 ¼" X 17 ¾" X 2")
(APPROXIMATE WEIGHT 172 LBS.)
GRATE..... 172 LBS.

(NOTED AS TYPE H-S ON DRAINAGE TABLE)

GENERAL NOTES

DETAILS OF CONSTRUCTION, MATERIALS AND WORKMANSHIP NOT SHOWN ON THIS DRAWING SHALL CONFORM TO THE PERTINENT REQUIREMENTS OF THE STANDARD SPECIFICATIONS AND THE APPLICABLE SPECIAL PROVISIONS.

DETAIL DRAWINGS FOR PROPOSED ALTERNATE DESIGNS FOR CATCH BASIN, MANHOLE AND INLET COVERS SHALL BE SUBMITTED TO THE ENGINEER FOR APPROVAL PROVIDING THAT SUCH ALTERNATE DESIGNS MAKE PROVISION FOR EQUIVALENT CAPACITY AND STRENGTH.

ROUND FRAMES AND COVERS SHALL HAVE CONTINUOUSLY MACHINED BEARING SURFACES TO PREVENT ROCKING AND RATTLING.

THE ACTUAL WEIGHT OF COVERS MAY VARY WITHIN 5 PERCENT, PLUS OR MINUS, OF THE APPROXIMATE WEIGHT.

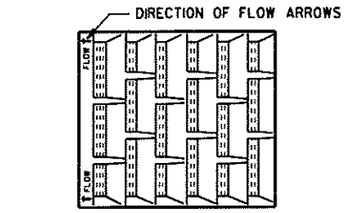

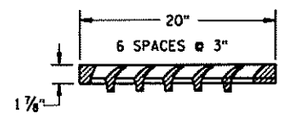

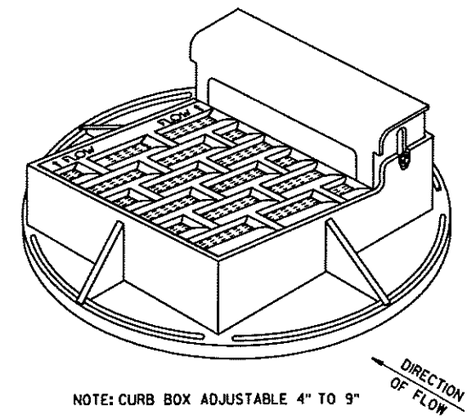

NOTE: CURB BOX ADJUSTABLE 4" TO 9"

NOTE:
GRATE IS REVERSIBLE.

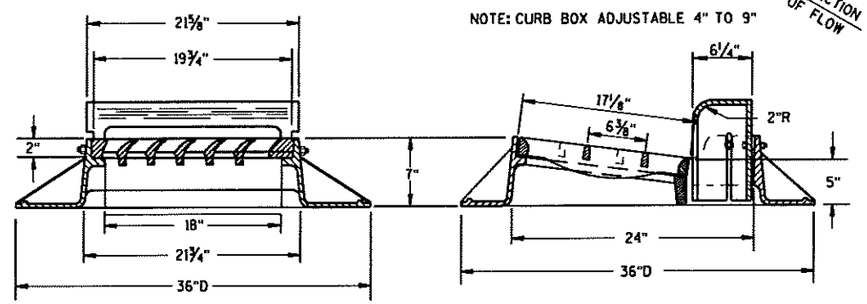

TYPE "A"

(APPROXIMATE WEIGHT 325 LBS.)
FRAME..... 157 LBS.
GRATE..... 84 LBS.
CURB BOX..... 84 LBS.

1" DIAGONAL BARS WITH 1 ½" OPENINGS

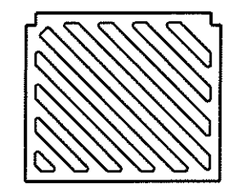

SPECIAL GRATE FOR TYPE "A" COVER

(MEASURES 19 ¾" X 17" X 1 ⅞"
GRATE..... 84 LBS.

(NOTED AS TYPE A-S ON DRAINAGE TABLE)

INLET COVERS
TYPE A, H, A-S, & H-S

STATE OF WISCONSIN
DEPARTMENT OF TRANSPORTATION

APPROVED
10/4/99
DATE
CHIEF ROADWAY DEVELOPMENT ENGINEER
FHWA

S.D.D. 8 A 5-16a

S.D.D. 8 A 5-16a

*SELECTION OF SQUARE OR CIRCULAR DESIGN WILL BE BASED ON THE PIPE SIZES AND THE INLET COVER BEING UTILIZED

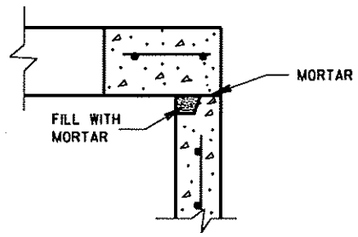

DETAIL "A"

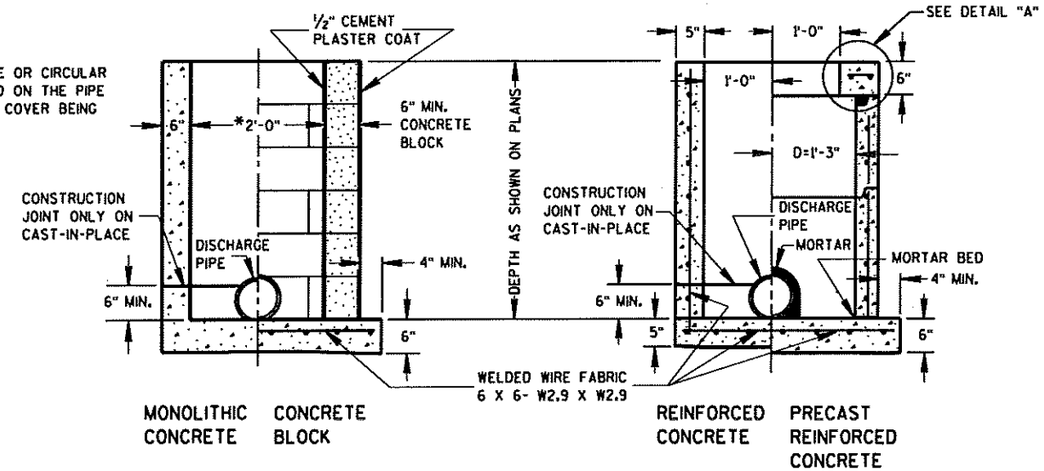

INLETS TYPE 1

GENERAL NOTES

DETAILS OF CONSTRUCTION, MATERIALS AND WORKMANSHIP NOT SHOWN ON THIS DRAWING SHALL CONFORM TO THE PERTINENT REQUIREMENTS OF THE STANDARD SPECIFICATIONS AND THE APPLICABLE SPECIAL PROVISIONS.

DETAILED DRAWINGS FOR PROPOSED ALTERNATE DESIGNS FOR UNDERGROUND DRAINAGE STRUCTURES SHALL BE SUBMITTED TO THE ENGINEER FOR APPROVAL PROVIDING THAT SUCH ALTERNATE DESIGNS MAKE PROVISION FOR EQUIVALENT CAPACITY AND STRENGTH.

ALL PRECAST INLET UNITS SHALL CONFORM TO THE PERTINENT REQUIREMENTS OF AASHTO DESIGNATION M 199.

ALL DRAINAGE STRUCTURES ARE DESIGNATED ON THE PLANS AS "MANHOLES 1-C", "CATCH BASINS 1-B", "INLETS 3-H", ETC. THE FIRST DIGIT DESIGNATES THE MASONRY PORTION OF THE STRUCTURE, AND THE FOLLOWING LETTER DESIGNATES THE TYPE OF COVER TO BE USED TO COMPRISE THE COMPLETE UNIT.

PRECAST REINFORCED BASES SHALL BE PLACED ON A BED OF MATERIAL AT LEAST 6 INCHES IN DEPTH, WHICH MEETS THE REQUIREMENTS OF GRANULAR BACKFILL. THIS BEDDING SHALL BE COMPACTED AND PROVIDE UNIFORM SUPPORT FOR THE ENTIRE AREA OF THE BASE.

PRECAST REINFORCED CONCRETE FLAT SLAB TOPS MAY BE USED ON THE STRUCTURES. THE TOPS SHALL BE INSTALLED ON A BED OF MORTAR.

ALL BAR STEEL REINFORCEMENT SHALL BE EMBEDDED 2 INCHES CLEAR UNLESS OTHERWISE SHOWN OR NOTED.

PRECAST REINFORCED CONCRETE RISERS SHALL BE PLACED WITH TONGUE DOWN.

(1) USE 2'-6" OPENING FOR TYPE 2 INLETS, 3'-0" OPENING FOR TYPE 3 INLETS, AND 2'-11" FOR TYPE 4 INLETS.

(2) USE 2'-0" OPENING FOR TYPE 1, 2 & 3 INLETS, 2'-6½" OPENING FOR TYPE 4 INLETS.

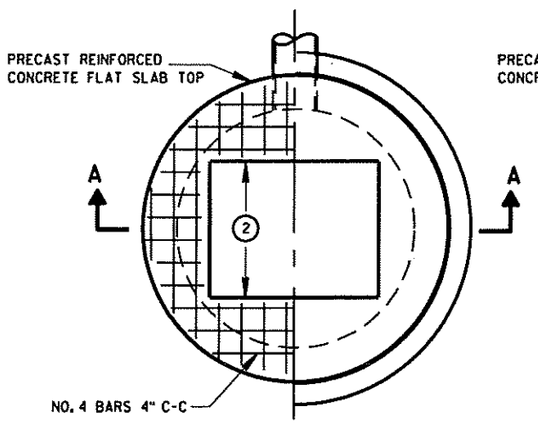

PLAN VIEW

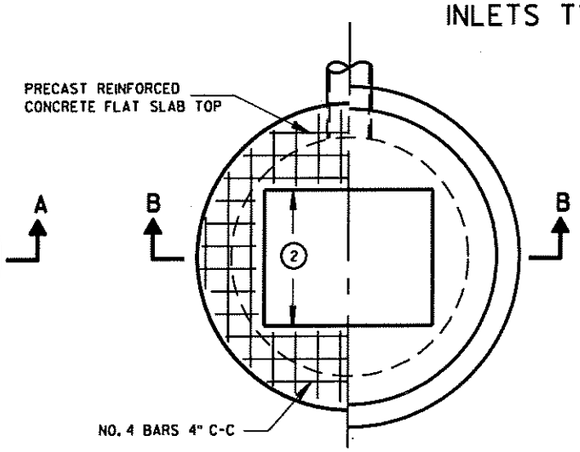

PLAN VIEW

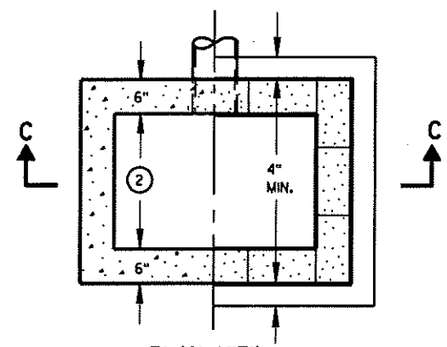

PLAN VIEW

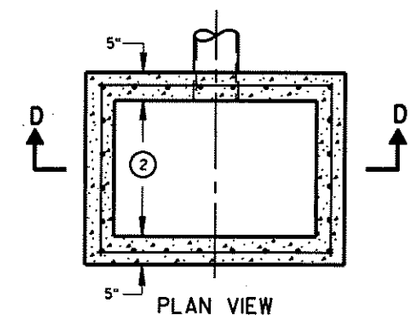

PLAN VIEW

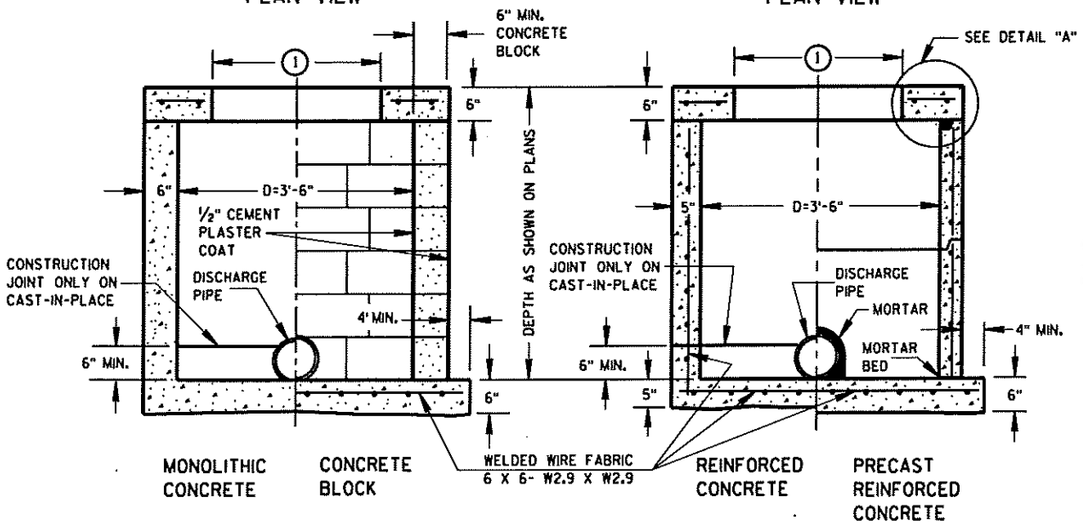

SECTION A-A

SECTION B-B

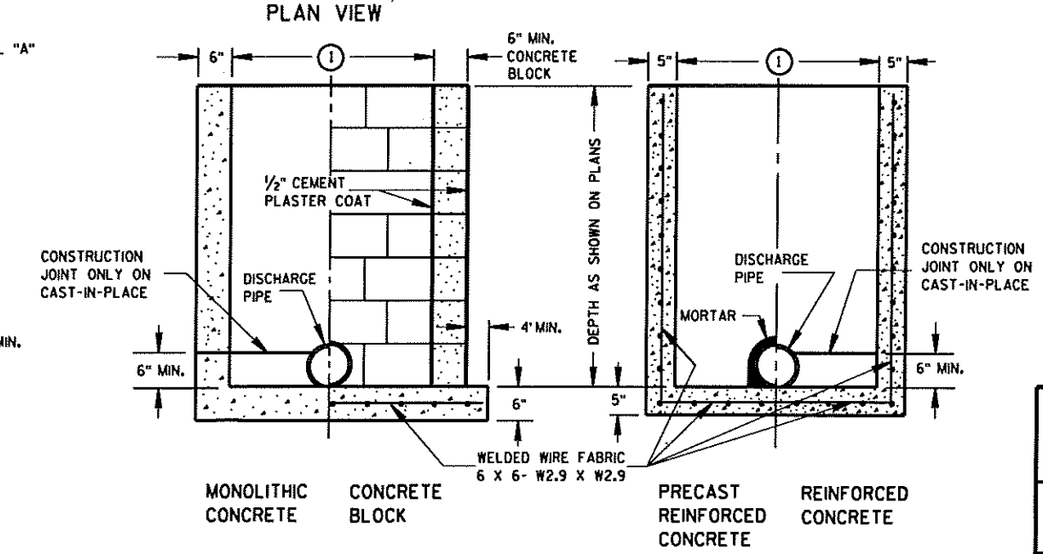

SECTION C-C

SECTION D-D

INLETS TYPE 2, 3 & 4

INLETS TYPE 1, 2, 3 & 4

STATE OF WISCONSIN
DEPARTMENT OF TRANSPORTATION

APPROVED 8/26/94 DATE

CHIEF ROADWAY DEVELOPMENT ENGINEER

FHWA

S.D.D. 8 C 1-5

6

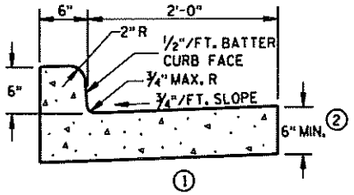

① TYPES A & D

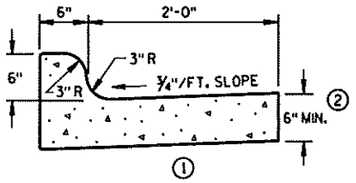

① TYPES K & L

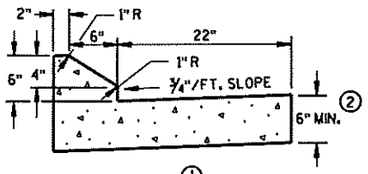

① TYPES G & J

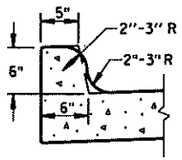

OPTIONAL CURB SHAPE
① FOR TYPES K & L

CONCRETE CURB & GUTTER 30"

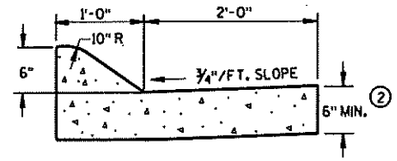

(6" MOUNTABLE CURB)

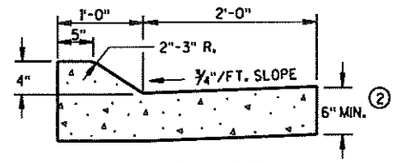

(4" MOUNTABLE CURB)

① TYPES A & D

CONCRETE CURB & GUTTER 36"

GENERAL NOTES

DETAILS OF CONSTRUCTION, MATERIALS AND WORKMANSHIP NOT SHOWN ON THIS DRAWING SHALL CONFORM TO THE PERTINENT REQUIREMENTS OF THE CONTRACT.

PAVEMENT TIES AND TIE BARS SHALL BE EPOXY COATED IN CONFORMANCE WITH SUBSECTION 505.2.6.2 OF THE STANDARD SPECIFICATIONS.

INTEGRAL CURB & GUTTER SHALL CONFORM TO THE DETAILS SHOWN FOR CONCRETE CURB & GUTTER INCLUDING THE TRANSVERSE GUTTER SLOPE. A LONGITUDINAL CONSTRUCTION JOINT IS NOT REQUIRED WITH INTEGRAL CURB AND GUTTER.

WHERE THE TRANSVERSE JOINTS IN THE PAVEMENT ARE REQUIRED TO BE SEALED, THE JOINTS IN THE INTEGRAL CURB AND GUTTER SHALL BE SEALED TO THE FACE OF CURB WITH THE SAME TYPE OF SEALANT. THE COST OF FURNISHING AND INSTALLING THIS SEALANT SHALL BE INCIDENTAL TO THE ITEM CONCRETE CURB AND GUTTER.

UNLESS OTHERWISE SHOWN ON THE TYPICAL CROSS SECTIONS, THE BASE COURSE AND UNCLASSIFIED EXCAVATION LIMITS ARE 2'-0" BEHIND THE BACK OF CURBS.

① TIE BARS ARE REQUIRED FOR CURB AND GUTTER TYPES A, G AND K.

② THE BOTTOM OF CURB AND GUTTER MAY BE CONSTRUCTED EITHER LEVEL OR PARALLEL TO THE SLOPE OF THE SUBGRADE OR BASE COURSE PROVIDED A 6" MINIMUM GUTTER THICKNESS IS MAINTAINED.

③ WHEN REVERSE SLOPE GUTTER IS REQUIRED, THE LOCATION(S) WILL BE SHOWN ELSEWHERE IN THE PLAN.

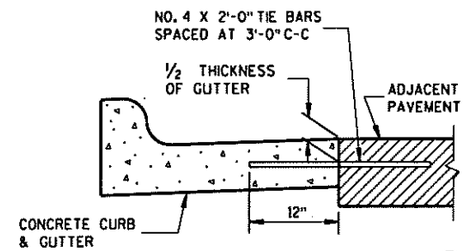

TYPICAL TIE BAR LOCATION ①

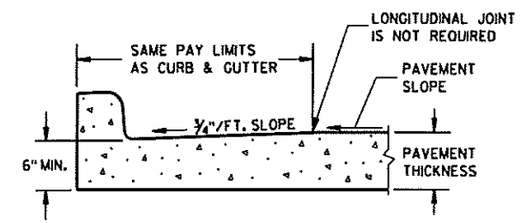

PARTIAL SECTION OF PAVEMENT WITH INTEGRAL CURB & GUTTER

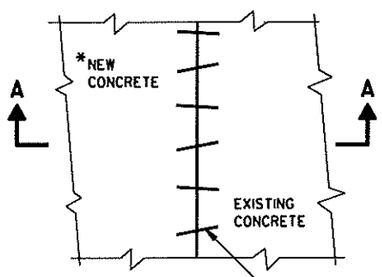

*NEW CURB & GUTTER, SURFACE DRAINS, CONCRETE PAVEMENT OR OTHER NEW CONCRETE.

PLAN VIEW

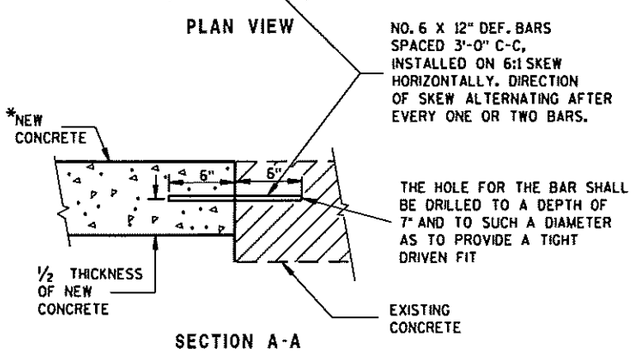

SECTION A-A

PAVEMENT TIES

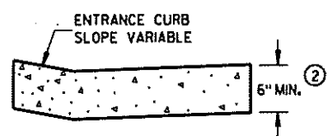

DRIVEWAY ENTRANCE CURB

(WHEN DIRECTED BY THE ENGINEER)

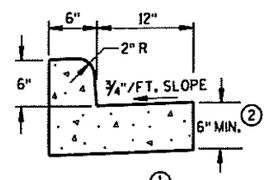

① TYPES A & D

CONCRETE CURB & GUTTER 18"

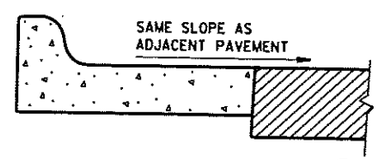

REVERSE SLOPE GUTTER ③

(TYPICAL FOR ALL CURB & GUTTER TYPES)

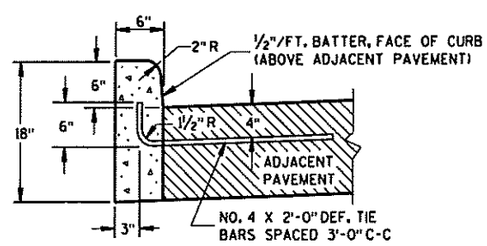

① TYPES A & D

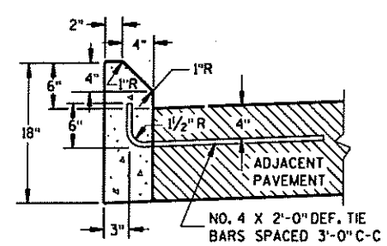

① TYPES G & J

CONCRETE CURB

CONCRETE CURB, CONCRETE CURB & GUTTER AND PAVEMENT TIES
STATE OF WISCONSIN DEPARTMENT OF TRANSPORTATION
APPROVED 4/15/99 DATE — CHIEF ROADWAY DEVELOPMENT ENGINEER — FHWA

S.D.D. 8 D 1-13

S.D.D. 8 D 1-13

ASPHALTIC FLUME

NOTE: TAPER CURB ENDS TO GUTTER IN 1'-0"

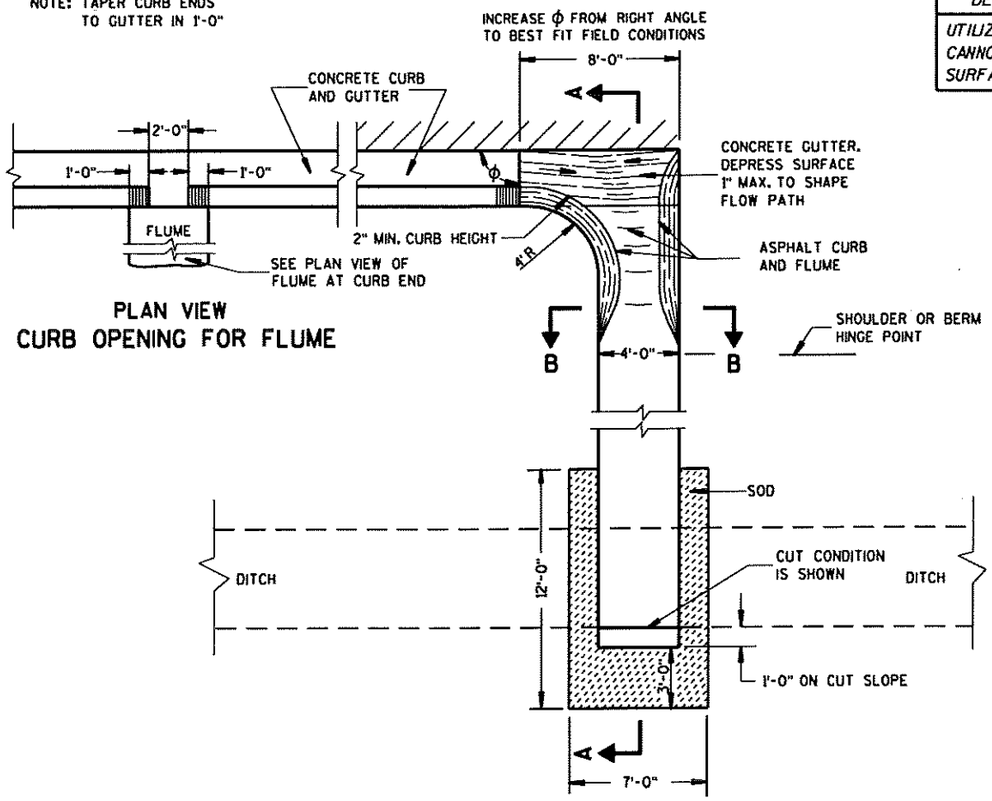

PLAN VIEW
CURB OPENING FOR FLUME

PLAN VIEW
FLUME AT CURB END

DESIGN NOTES: (WILL NOT APPEAR IN CONTRACT PLANS)

UTILIZE INLETS WHERE STORM WATER VOLUME AND VELOCITY CANNOT BE ACCOMODATED EFFECTIVELY WITH A FLUME OR SURFACE DRAIN.

GENERAL NOTES

DETAILS OF CONSTRUCTION, MATERIALS AND WORKMANSHIP NOT SHOWN ON THIS DRAWING SHALL CONFORM TO PERTINENT REQUIREMENTS OF THE STANDARD SPECIFICATIONS AND APPLICABLE SPECIAL PROVISIONS.

WELDED STEEL WIRE FABRIC SHALL BE IN ACCORDANCE WITH AASHTO SPECIFICATION M55.

① JOINTS SHALL BE 1/8 TO 1/4 INCH WIDE BY 1 1/2 INCHES DEEP AND SPACED AT UNIFORM INTERVALS OF APPROXIMATELY 4 FEET.

② GEOTEXTILE FABRIC TYPE "R" SHALL UNDERLAY THE FULL LENGTH AND WIDTH OF THE CONCRETE SURFACE DRAIN AND RIPRAP.

③ CONCRETE SURFACE DRAIN WITHOUT CURB AND GUTTER MAY BE USED ON BACKSLOPES WHEN SPECIFIED

③ CONCRETE SURFACE DRAIN

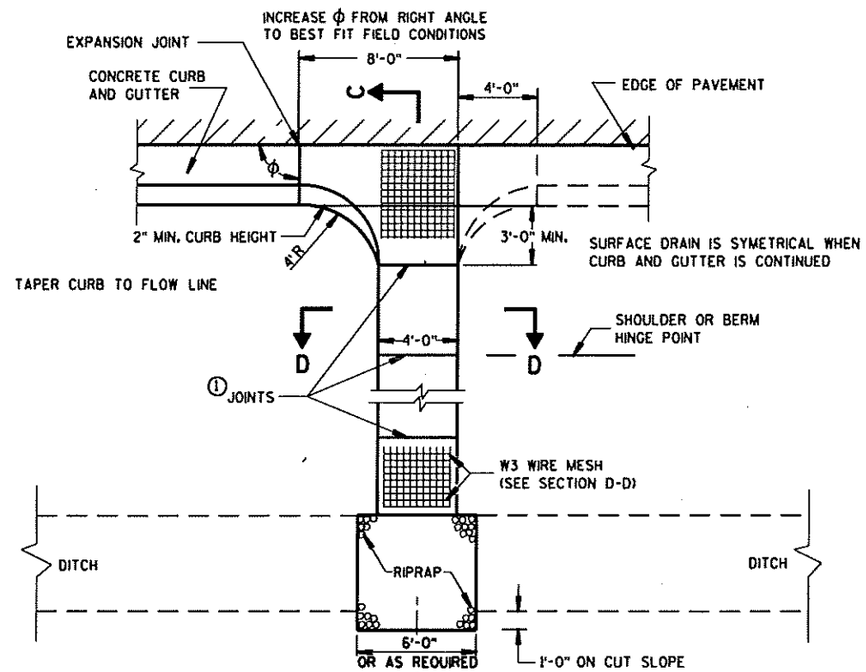

PLAN VIEW

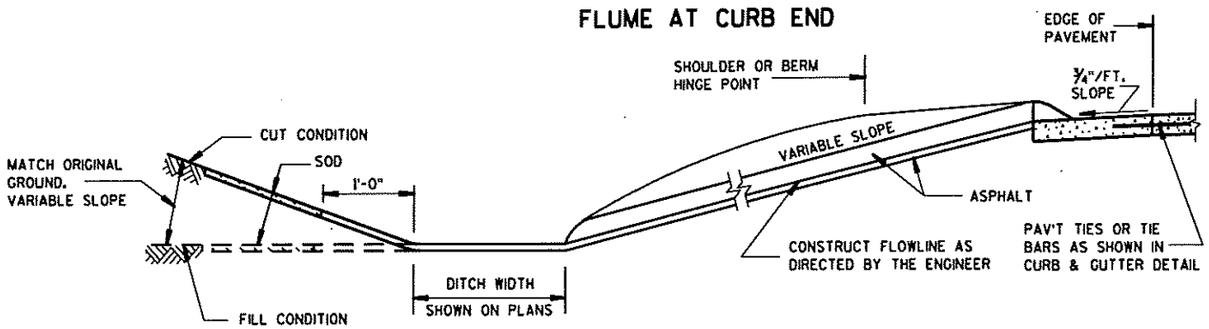

SECTION A-A

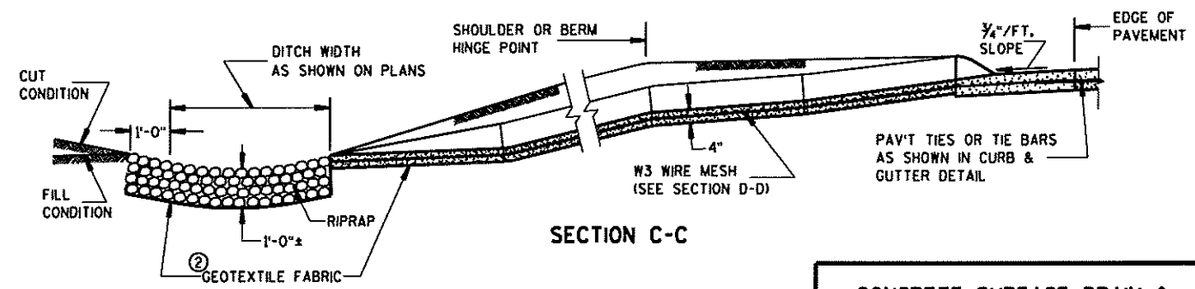

SECTION C-C

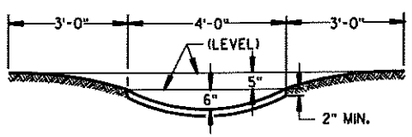

SECTION B-B

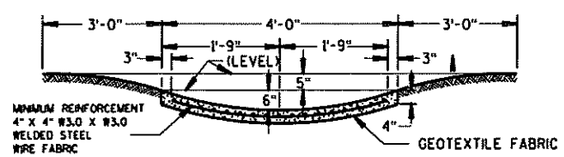

SECTION D-D

CONCRETE SURFACE DRAIN & ASPHALTIC FLUME

STATE OF WISCONSIN
DEPARTMENT OF TRANSPORTATION

APPROVED
10/23/89
DATE
FHWA

STATE DESIGN ENGINEER FOR HWYS

S.D.D. 8 D 4-3

S.D.D. 8 D 4-3

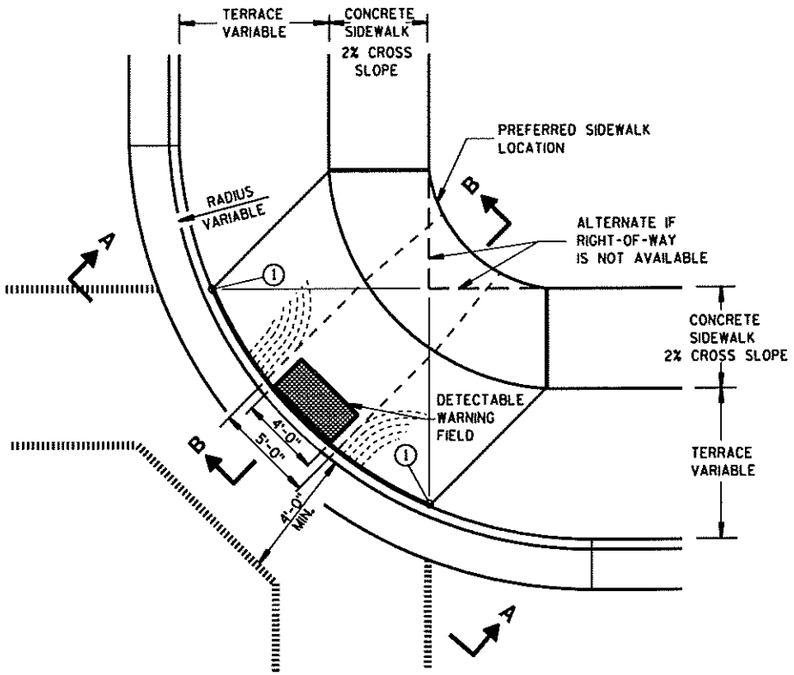

PLAN VIEW
TYPE 1 RAMP
(CENTER OF CORNER RADIUS)

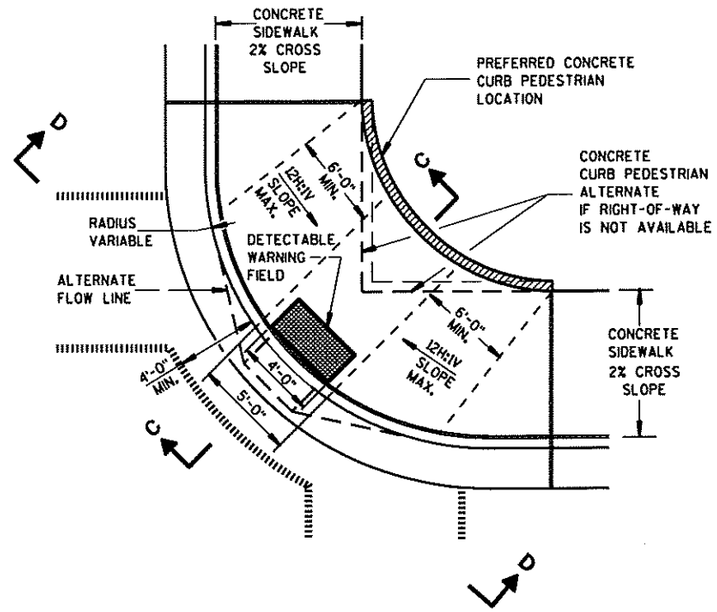

PLAN VIEW
TYPE 1-A RAMP
(NO TERRACE)

GENERAL NOTES

DETAILS OF CONSTRUCTION, MATERIALS AND WORKMANSHIP NOT SHOWN ON THIS DRAWING SHALL CONFORM TO THE PERTINENT REQUIREMENTS OF THE STANDARD SPECIFICATIONS AND THE APPLICABLE SPECIAL PROVISIONS.

RAMPS SHALL BE BUILT AT 12H:1V OR FLATTER. WHEN NECESSARY, THE SIDEWALK ELEVATION MAY BE LOWERED TO MEET THE HIGH POINT ON THE RAMP.

TYPE 1 RAMPS SHALL HAVE A NORMAL SIDEWALK APRON AND CURB ON BOTH SIDES OF RAMP.

DETECTABLE WARNING FIELD SHALL BE MEASURED AND PAID BY THE SQUARE FOOT AS "CURB RAMP DETECTABLE WARNING FIELD". THE CONCRETE PEDESTRIAN CURB, IF NEEDED, SHALL BE MEASURED AND PAID BY THE LINEAL FOOT AS "CONCRETE CURB PEDESTRIAN". CONCRETE SIDEWALK IN THE CURB RAMP AREA SHALL BE MEASURED AND PAID BY THE SQUARE FOOT AS CONCRETE SIDEWALK, INCLUDING THE AREA UNDER THE DETECTABLE WARNING FIELD.

SELECT CURB RAMP DETECTABLE WARNING FIELD MATERIALS AND DEVICES FROM THE DEPARTMENT'S APPROVED MATERIALS LIST. THE COLOR OF THE DETECTABLE WARNING FIELD IS SPECIFIED ELSEWHERE AND IS INCIDENTAL TO THE BID ITEM OF "CURB RAMP DETECTABLE WARNING FIELD".

SURFACE TEXTURE OF THE RAMP SHALL BE OBTAINED BY COARSE BROOMING TRANSVERSE TO THE SLOPE OF THE RAMP.

(1) THIS POINT IS AN EXTENSION OF OUTSIDE EDGE OF APPROACHING SIDEWALK WHERE IT MEETS THE BACK OF CONCRETE CURB.

(2) GRADE CHANGE BETWEEN GUTTER FLAG SLOPE AND THE CURB RAMP SLOPE SHALL NOT EXCEED 11%. PROVIDE DRAINAGE AWAY FROM CURB RAMP AT GUTTER FLAG INTERFACE.

LEGEND

- ½" EXPANSION JOINT-SIDEWALK
- CONTRACTION JOINT FIELD LOCATED
- PAVEMENT MARKING CROSSWALK (WHITE)
- ALTERNATIVE LAYOUT

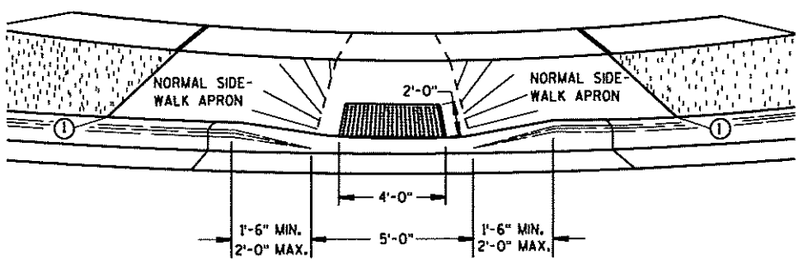

VIEW A-A

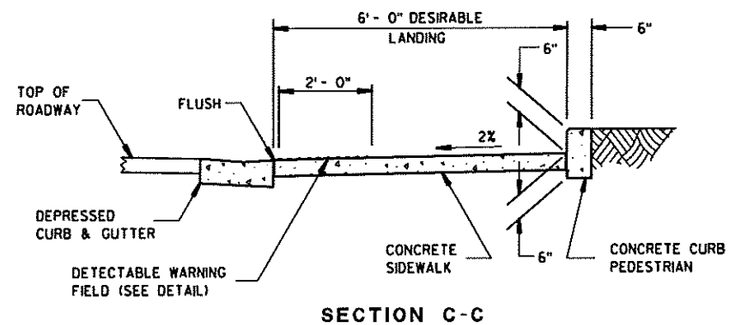

SECTION C-C

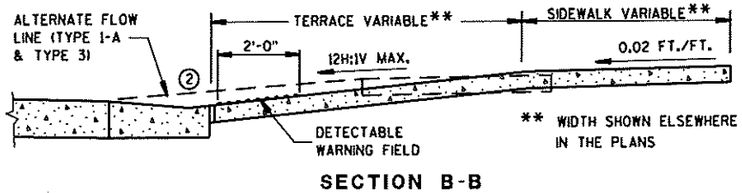

SECTION B-B

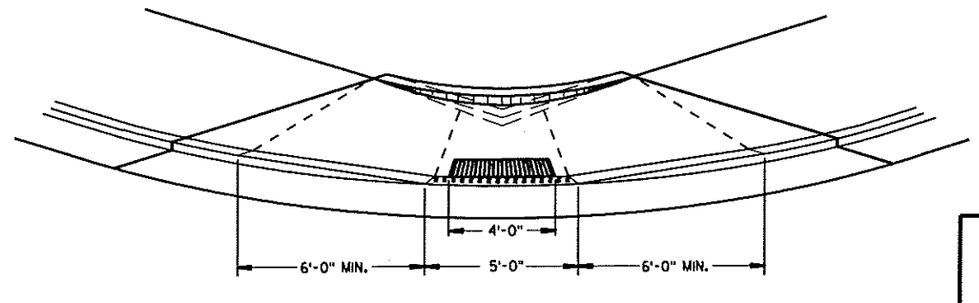

VIEW D-D

CURB RAMPS
TYPES I AND I-A

STATE OF WISCONSIN
DEPARTMENT OF TRANSPORTATION

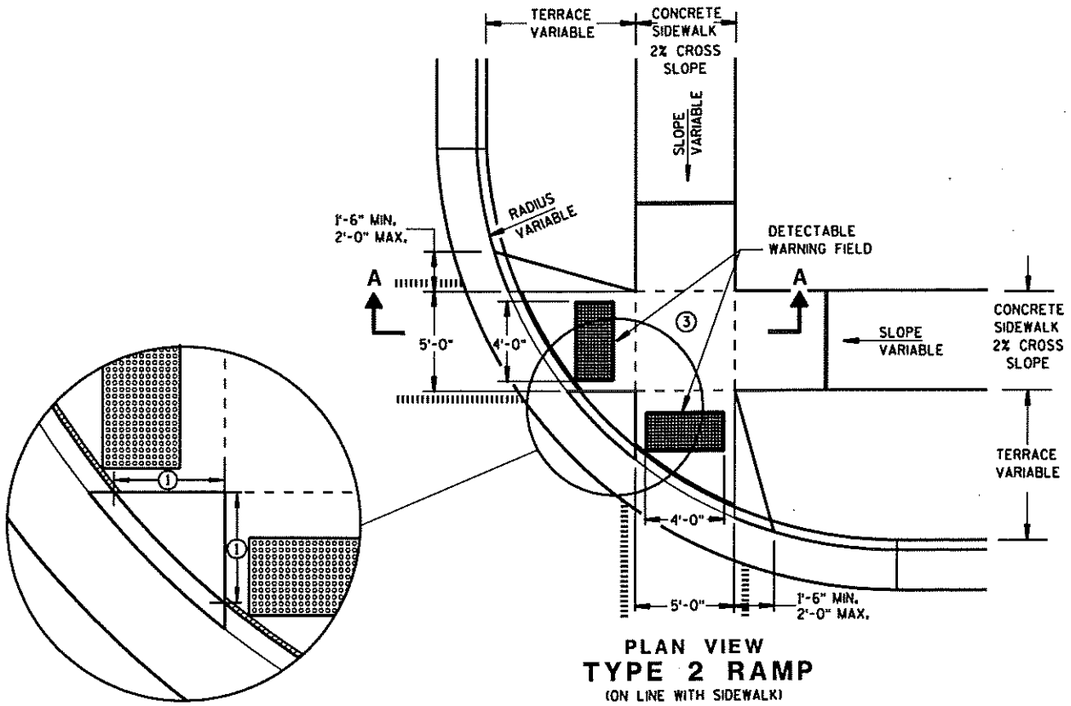

PLAN VIEW
TYPE 2 RAMP
(ON LINE WITH SIDEWALK)

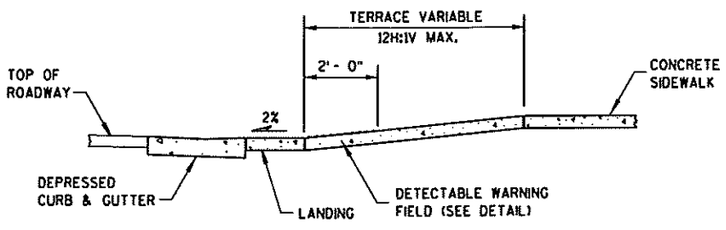

SECTION A-A

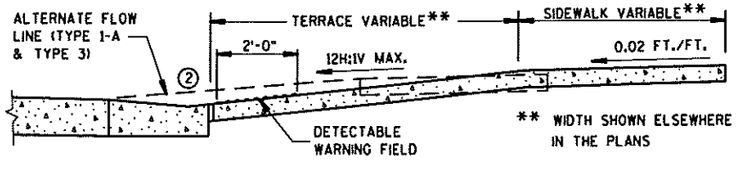

SECTION B-B

GENERAL NOTES

USE THE TYPE 3 RAMP ONLY WHEN A TYPE 1 OR TYPE 2 CANNOT BE ACHIEVED BECAUSE OF FIELD CONDITIONS.

1. WHEN THIS DISTANCE IS LESS THAN 6'-0" IT MAY BE DIFFICULT TO ACHIEVE A 12H:1V SLOPE, OR FLATTER, ON THE RAMP. REDUCE CURB HEIGHT IN TRIANGLE AREA TO ACHIEVE 12H:1V SLOPE, OR FLATTER, ON RAMP. 2" MINIMUM CURB HEIGHT.
2. GRADE CHANGE BETWEEN GUTTER FLAG SLOPE AND THE CURB RAMP SLOPE SHALL NOT EXCEED 11%. PROVIDE DRAINAGE AWAY FROM CURB RAMP AT GUTTER FLAG INTERFACE.
3. PROVIDE LANDING AT TOP OF RAMP WITH NO MORE THAN 2% SLOPE IN ANY DIRECTION.

LEGEND

- ½" EXPANSION JOINT-SIDEWALK
- CONTRACTION JOINT FIELD LOCATED
- PAVEMENT MARKING CROSSWALK (WHITE)
- ALTERNATIVE LAYOUT

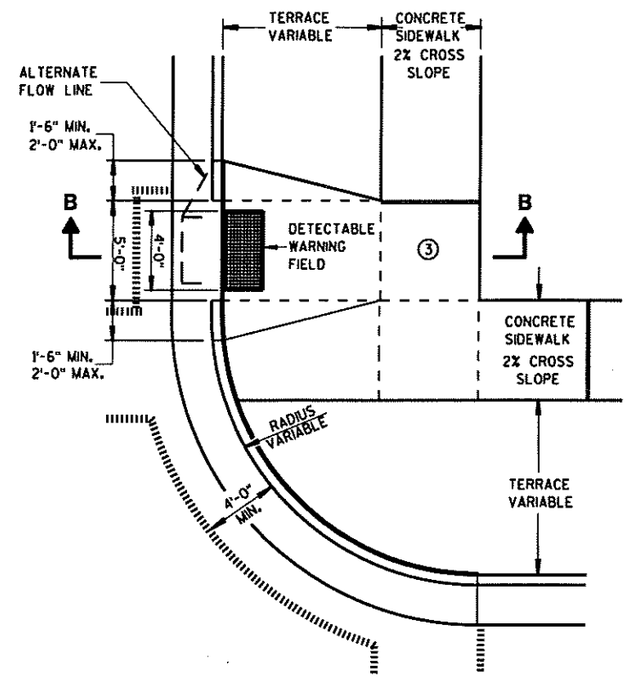

PLAN VIEW
TYPE 3 RAMP
(OUTSIDE OF CROSSWALK AREA)

CURB RAMPS
TYPES 2 AND 3

STATE OF WISCONSIN
DEPARTMENT OF TRANSPORTATION

6

S.D.D. 8 D 5-11b

6

S.D.D. 8 D 5-11b

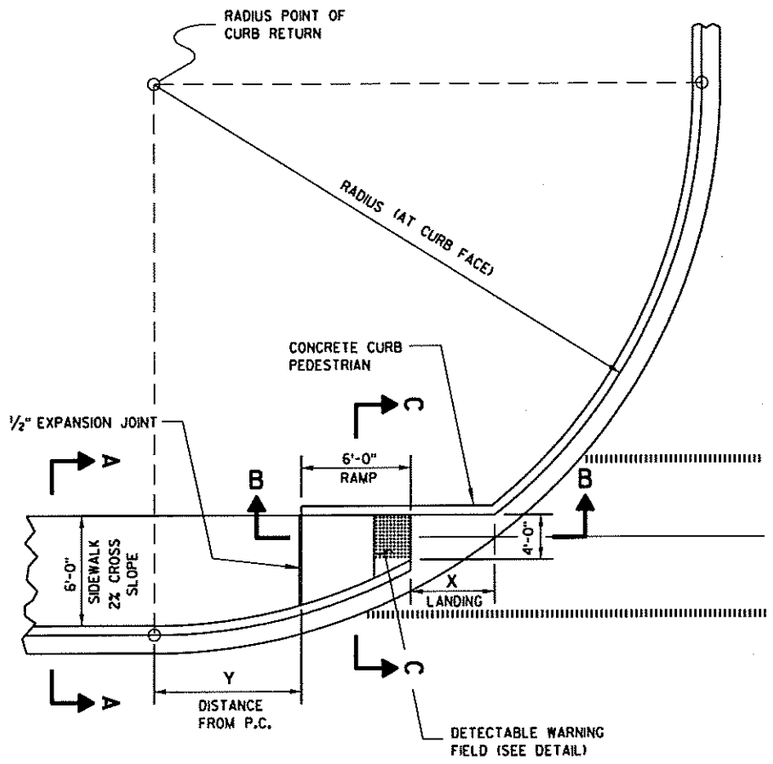

CURB RAMP TYPE 4A
PLAN VIEW

RADIUS (AT CURB FACE)	X	Y
20 FEET	6'-1¾"	2'-7¼"
30 FEET	7'-11¾"	4'-8¼"
40 FEET	9'-5¼"	6'-5"
50 FEET	10'-8¾"	7'-11¼"
60 FEET	11'-10¼"	9'-3½"

INTERMEDIATE RADII CAN BE INTERPOLATED

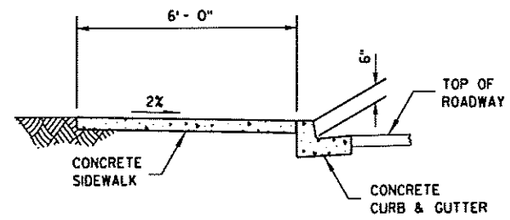

SECTION A-A

GENERAL NOTES

AVOID PLACING DRAINAGE STRUCTURES, JUNCTION BOXES OR OTHER OBSTRUCTIONS IN FRONT OF RAMP ACCESS AREAS.

RAMP SLOPES SHALL NOT BE STEEPER THAN 12:1.

SIDEWALK CROSS SLOPE SHALL NOT EXCEED 2%.

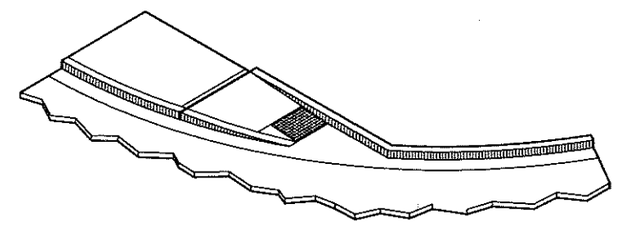

ISOMETRIC VIEW

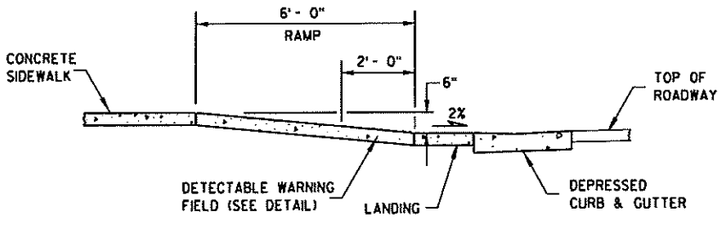

SECTION B-B

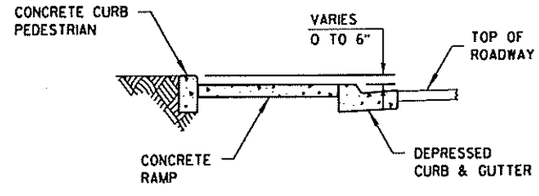

SECTION C-C

LEGEND

- 1/2" EXPANSION JOINT-SIDEWALK
- CONTRACTION JOINT FIELD LOCATED
- PAVEMENT MARKING CROSSWALK (WHITE)

CURB RAMPS
TYPE 4A

STATE OF WISCONSIN
DEPARTMENT OF TRANSPORTATION

6
S.D.D. 8 D 5-11c

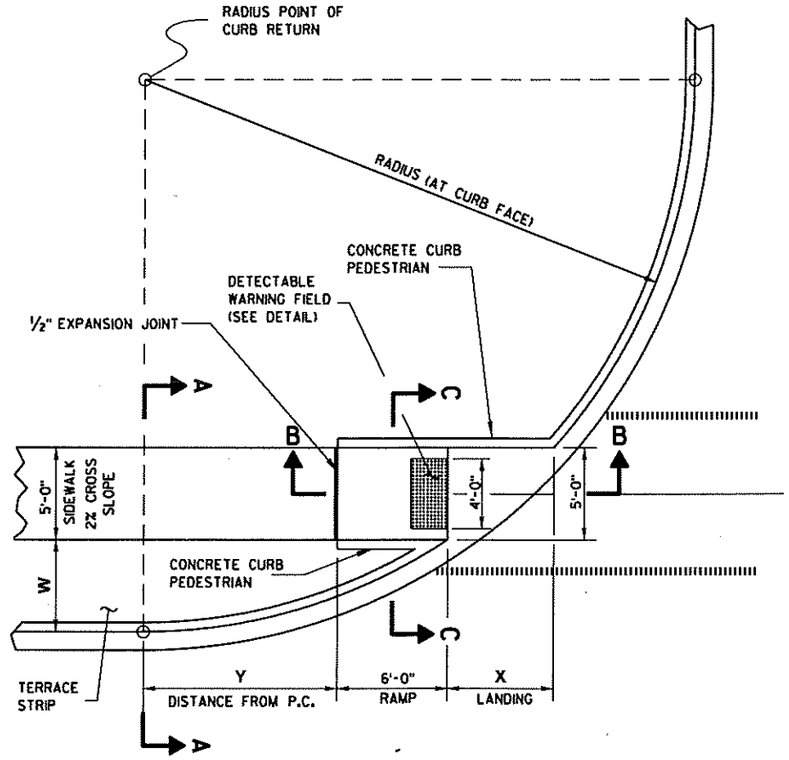

CURB RAMP TYPE 4B
PLAN VIEW

GENERAL NOTES

AVOID PLACING DRAINAGE STRUCTURES, JUNCTION BOXES OR OTHER OBSTRUCTIONS IN FRONT OF RAMP ACCESS AREAS.

RAMP SLOPES SHALL NOT BE STEEPER THAN 12:1.

SIDEWALK CROSS SLOPE SHALL NOT EXCEED 2%.

RADIUS (AT CURB FACE)	W = 3'-0"		W = 4'-0"		W = 5'-0"		W = 6'-0"		W = 7'-0"	
	X	Y	X	Y	X	Y	X	Y	X	Y
20 FEET	5'-5½"	4'-6½"	4'-8½"	6'-0"	4'-1"	7'-2¾"	3'-7"	8'-3½"	3'-1½"	9'-2½"
30 FEET	7'-3¾"	7'-1"	6'-5½"	8'-11½"	5'-9¼"	10'-7"	5'-2½"	12'-0"	4'-8¾"	13'-3¼"
40 FEET	8'-9½"	9'-2½"	7'-10"	11'-5¼"	7'-1"	13'-4½"	6'-5¾"	15'-¾"	5'-11½"	16'-7¼"
50 FEET	10'-¾"	11'-¾"	9'-¼"	13'-7¼"	8'-2½"	15'-9½"	7'-6½"	17'-9"	6'-11¾"	19'-6¼"
60 FEET	11'-2½"	12'-8¾"	10'-¾"	15'-6½"	9'-2¼"	17'-11¾"	8'-5¾"	20'-1¾"	7'-10½"	22'-1½"
70 FEET	12'-2¾"	14'-3¼"	11'-¼"	17'-4"	10'-1"	19'-11¾"	9'-3¾"	22'-4¼"	8'-8¼"	24'-6¼"
80 FEET	13'-2"	15'-8½"	11'-10½"	18'-11¾"	10'-10¾"	21'-10"	10'-1"	24'-4¾"	9'-5"	26'-8¾"
90 FEET	14'- ½"	17'-½"	12'-8¼"	20'-6½"	11'-7¾"	23'-7"	10'-9¾"	26'-3¾"	10'-1¼"	28'-9½"
100 FEET	14'-10½"	18'-3¾"	13'-5½"	22'-0"	12'-4¼"	25'-2¾"	11'-5¾"	28'-1½"	10'-9"	30'-9"

INTERMEDIATE RADII CAN BE INTERPOLATED

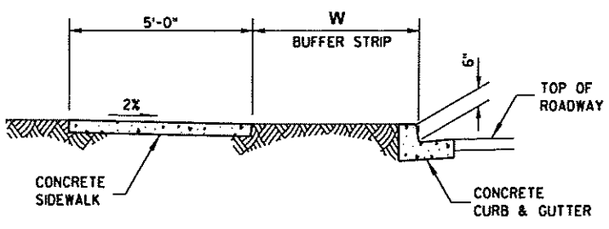

SECTION A-A

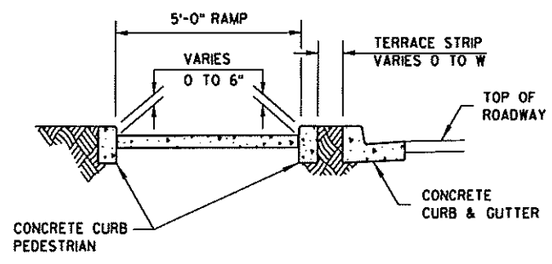

SECTION C-C

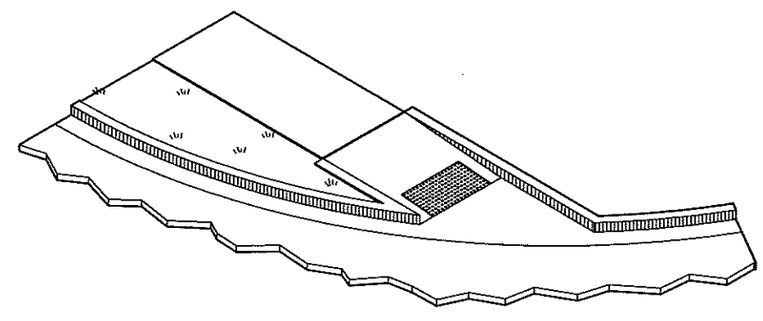

ISOMETRIC VIEW

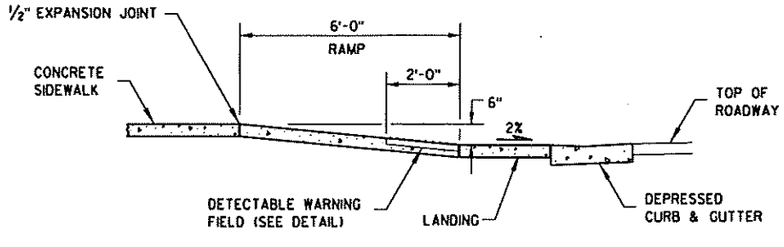

SECTION B-B

LEGEND

- ½" EXPANSION JOINT-SIDEWALK
- CONTRACTION JOINT FIELD LOCATED
- PAVEMENT MARKING CROSSWALK (WHITE)

CURB RAMPS
TYPE 4B

STATE OF WISCONSIN
DEPARTMENT OF TRANSPORTATION

6
S.D.D. 8 D 5-11d

GENERAL NOTES

SIDEWALK CROSS SLOPE SHALL NOT EXCEED 2%.

1. SLOPE SIDEWALK TOWARD LANDING AS SHOWN WHERE THERE IS NO TERRACE OR WHERE THE TERRACE WIDTH IS LESS THAN 6 FEET WIDE.

2. THE EDGE OF THE DETECTABLE WARNING FIELD NEAREST TO A RAILROAD CROSSING SHALL BE 1.5 FEET ± 0.1' FROM THE FACE OF THE GATE ARM IF THE GATE ARM EXTENDS ACROSS THE SIDEWALK. WHERE THERE IS NO PEDESTRIAN GATE, THE EDGE OF THE DETECTABLE WARNING FIELD NEAREST TO THE RAILROAD CROSSING SHALL BE 15 FEET FROM THE NEAREST RAIL.

LEGEND

- ½" EXPANSION JOINT-SIDEWALK
- CONTRACTION JOINT FIELD LOCATED
- PAVEMENT MARKING CROSSWALK (WHITE)

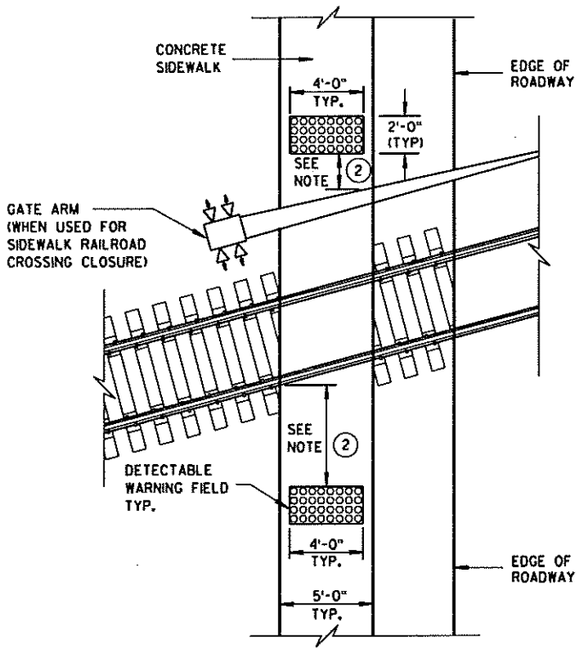

TYPE 8
DETECTABLE WARNINGS AT RAILROAD CROSSING

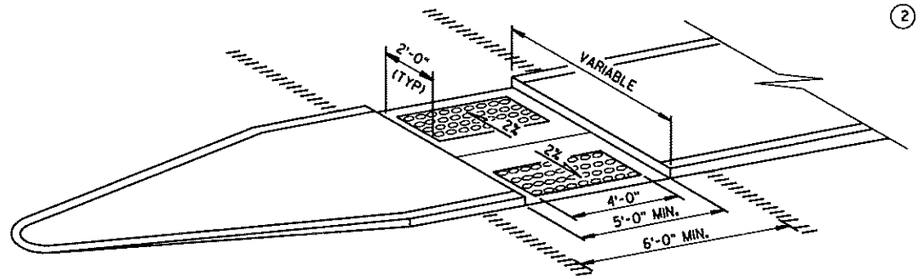

MEDIAN ISLAND
NON-ELEVATED CROSSING
TYPE 5

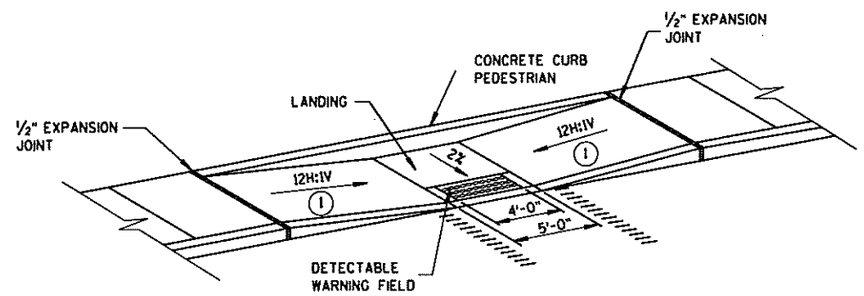

MID-BLOCK CROSSING
TYPE 7A

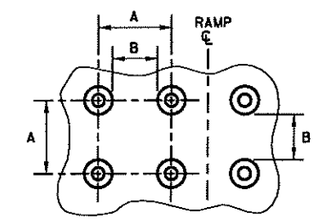

PLAN VIEW

	MIN.	MAX.
A	1.6"	2.4"
B	0.65"	1.5"
C	*	*
D	0.9"	1.4"

* THE C DIMENSION IS 50% TO 65% OF THE D DIMENSION.

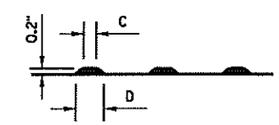

ELEVATION VIEW

TRUNCATED DOMES
DETECTABLE WARNING PATTERN DETAIL

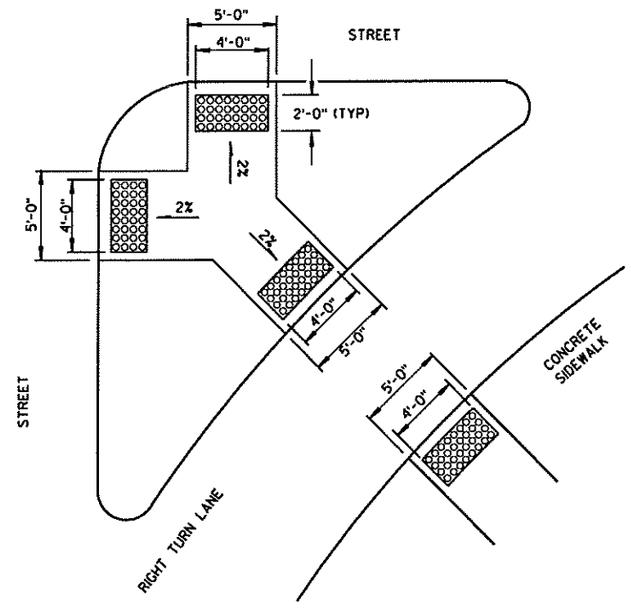

TYPE 6
DETECTABLE WARNING AT ISLANDS

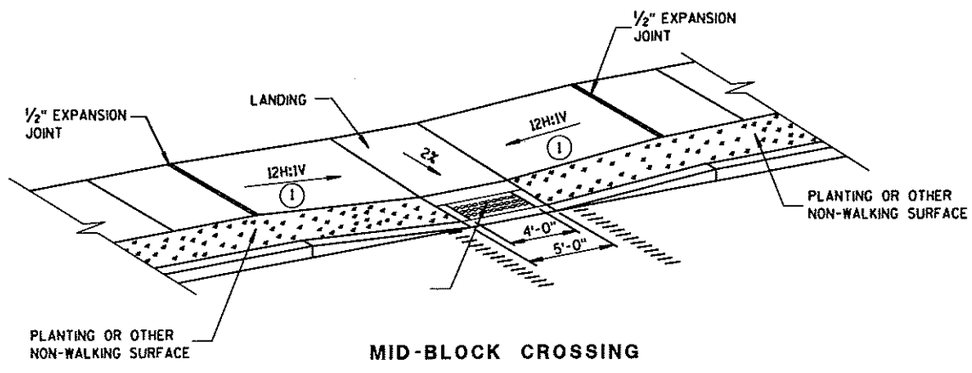

MID-BLOCK CROSSING
TYPE 7B

NOTE: THESE PARALLEL AND PARALLEL/PERPENDICULAR CURB RAMPS MAY BE USED AT INTERSECTIONS AND MID BLOCK LOCATIONS.

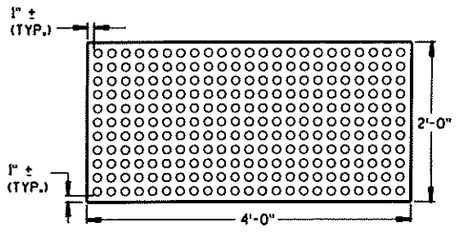

PLAN VIEW
DETECTABLE WARNING FIELD (TYPICAL)

CURB RAMPS
TYPES 5, 6, 7A, 7B & 8

STATE OF WISCONSIN
DEPARTMENT OF TRANSPORTATION

APPROVED

9/9/05	/S/ Jerry H. Zogg
DATE	ROADWAY STANDARDS DEVELOPMENT ENGINEER

FHWA

6

6

S.D.D. 8 D 5-11e

S.D.D. 8 D 5-11e

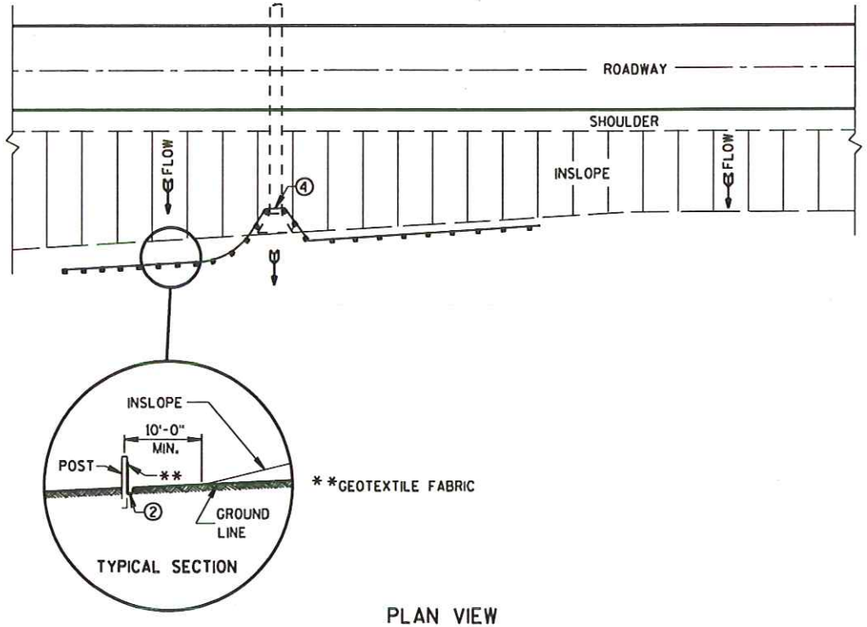

PLAN VIEW

TYPICAL APPLICATION OF SILT FENCE

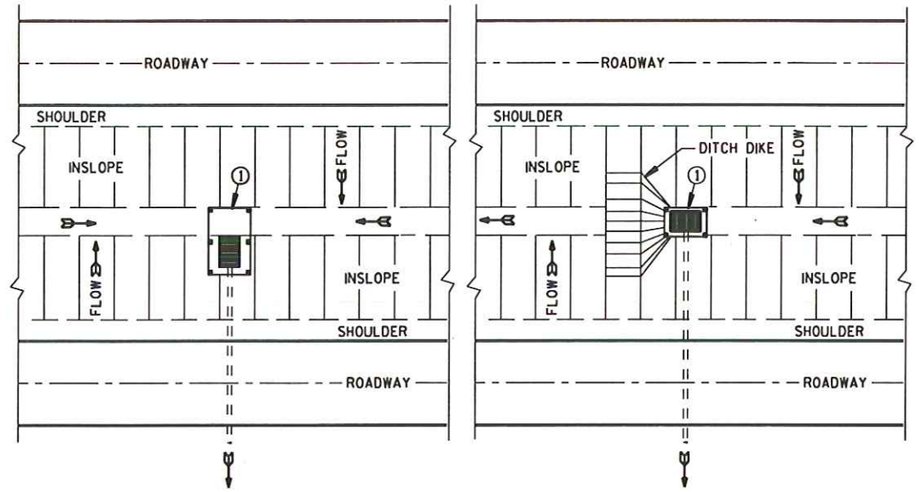

PLAN VIEW

SILT FENCE AT MEDIAN SURFACE DRAINS

GENERAL NOTES

DETAILS OF CONSTRUCTION NOT SHOWN ON THIS DRAWING SHALL CONFORM TO THE PERTINENT REQUIREMENTS OF THE STANDARD SPECIFICATIONS AND APPLICABLE SPECIAL PROVISIONS.

① HORIZONTAL BRACE REQUIRED WITH 2" X 4" WOODEN FRAME OR EQUIVALENT AT TOP OF POSTS.

② FOR MANUAL INSTALLATIONS THE TRENCH SHALL BE A MINIMUM OF 4" WIDE & 6" DEEP TO BURY AND ANCHOR THE GEOTEXTILE FABRIC. FOLD MATERIAL TO FIT TRENCH AND BACKFILL & COMPACT TRENCH WITH EXCAVATED SOIL.

③ WOOD POSTS SHALL BE A MINIMUM SIZE OF 1⅛" X 1⅛" OF OAK OR HICKORY.

④ SILT FENCE TO EXTEND ACROSS THE TOP OF THE PIPE.

⑤ CONSTRUCT SILT FENCE FROM A CONTINUOUS ROLL IF POSSIBLE BY CUTTING LENGTHS TO AVOID JOINTS. IF A JOINT IS NECESSARY USE ONE OF THE FOLLOWING TWO METHODS; A) OVERLAP THE END POSTS AND TWIST, OR ROTATE, AT LEAST 180 DEGREES, B) HOOK THE END OF EACH SILT FENCE LENGTH.

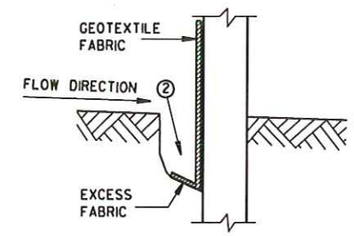

TRENCH DETAIL

NOTE: ADDITIONAL POST DEPTH OR TIE BACKS MAY BE REQUIRED IN UNSTABLE SOILS

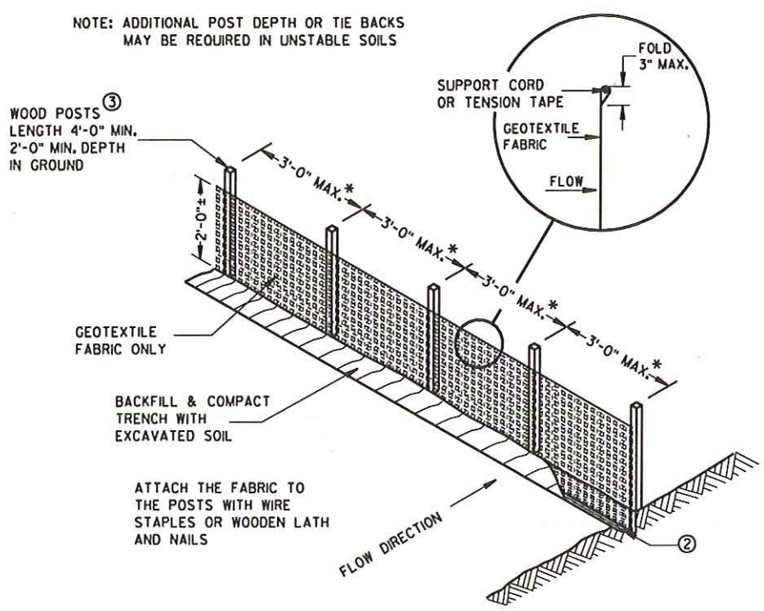

*NOTE: 8'-0" POST SPACING ALLOWED IF A WOVEN GEOTEXTILE FABRIC IS USED.

SILT FENCE

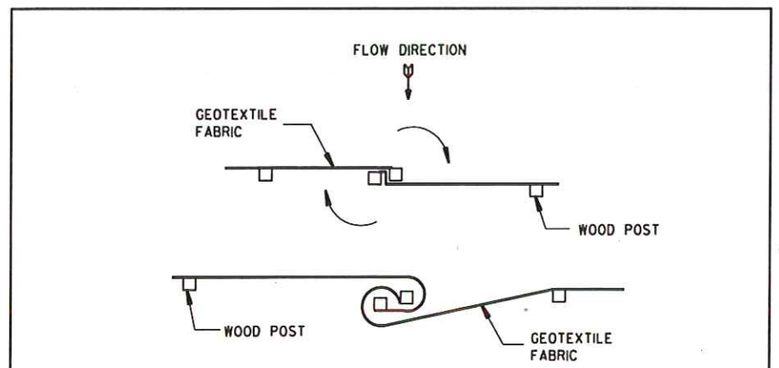

TWIST METHOD

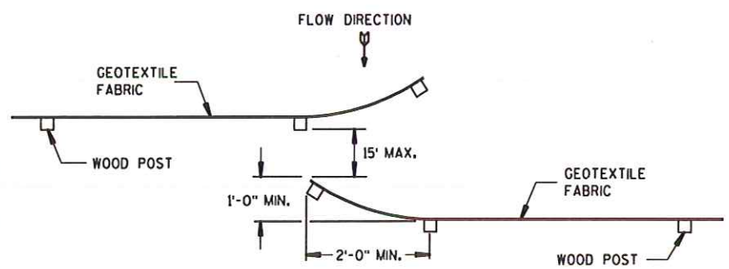

HOOK METHOD

JOINING TWO LENGTHS OF SILT FENCE ⑤

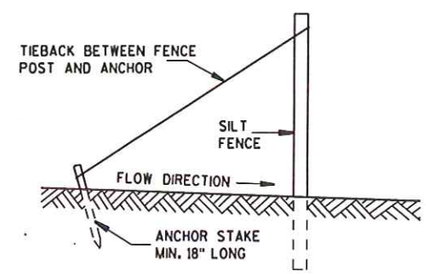

SILT FENCE TIE BACK

(WHEN REQUIRED BY THE ENGINEER)

6

SILT FENCE

STATE OF WISCONSIN
DEPARTMENT OF TRANSPORTATION

APPROVED
4-29-05
DATE
FHWA

CHIEF ROADWAY DEVELOPMENT ENGINEER

S.D.D. 8 E 9-6

S.D.D. 8 E 9-6

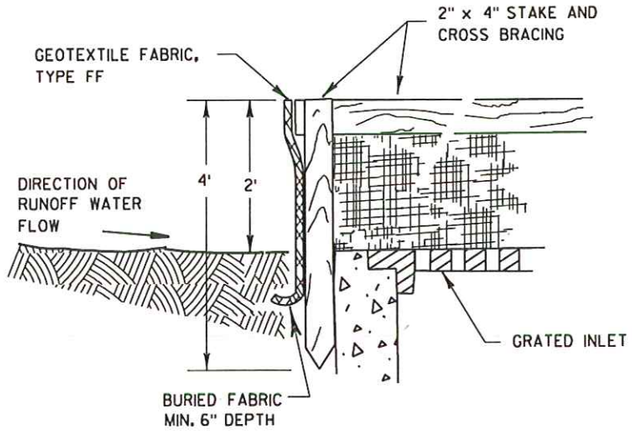

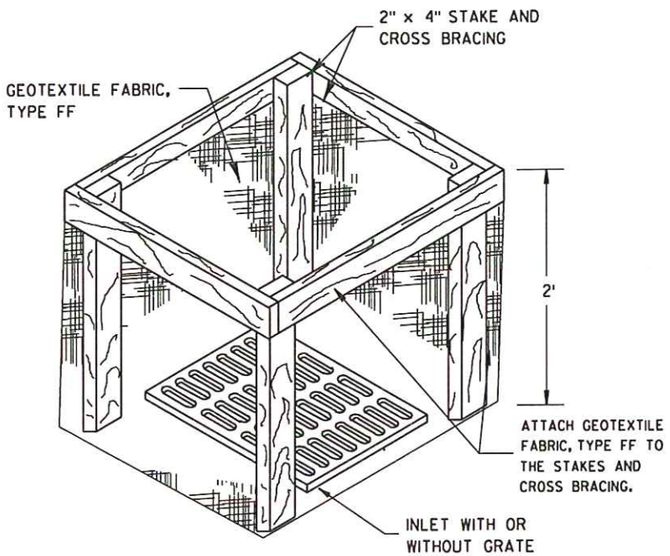

INLET PROTECTION, TYPE A

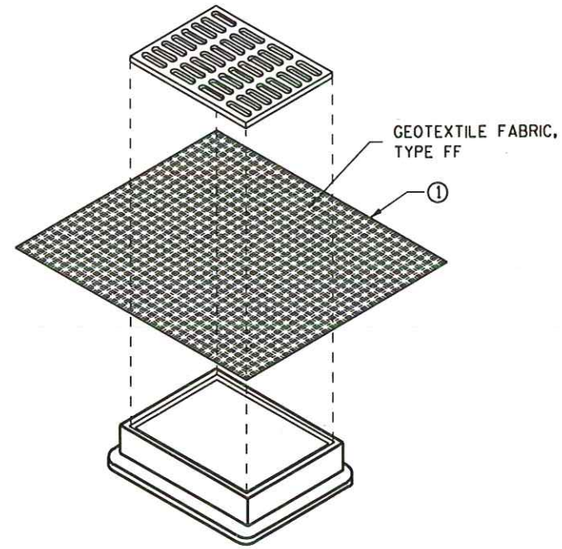

INLET PROTECTION, TYPE B (WITHOUT CURB BOX)

(CAN BE INSTALLED IN ANY INLET WITHOUT A CURB BOX)

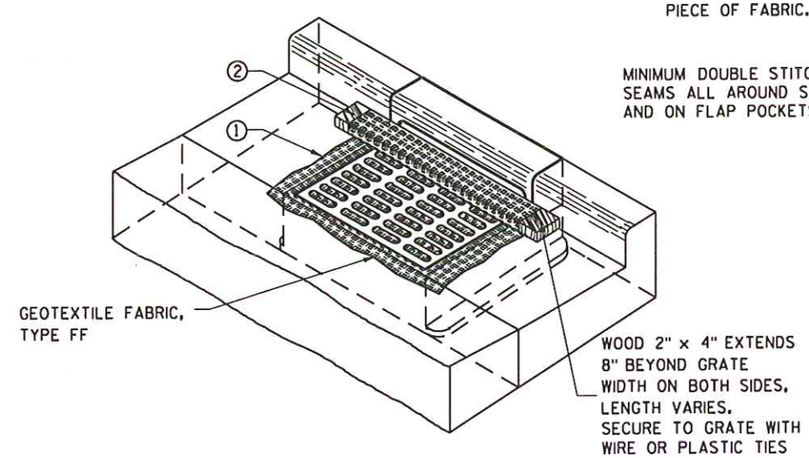

INLET PROTECTION, TYPE C (WITH CURB BOX)

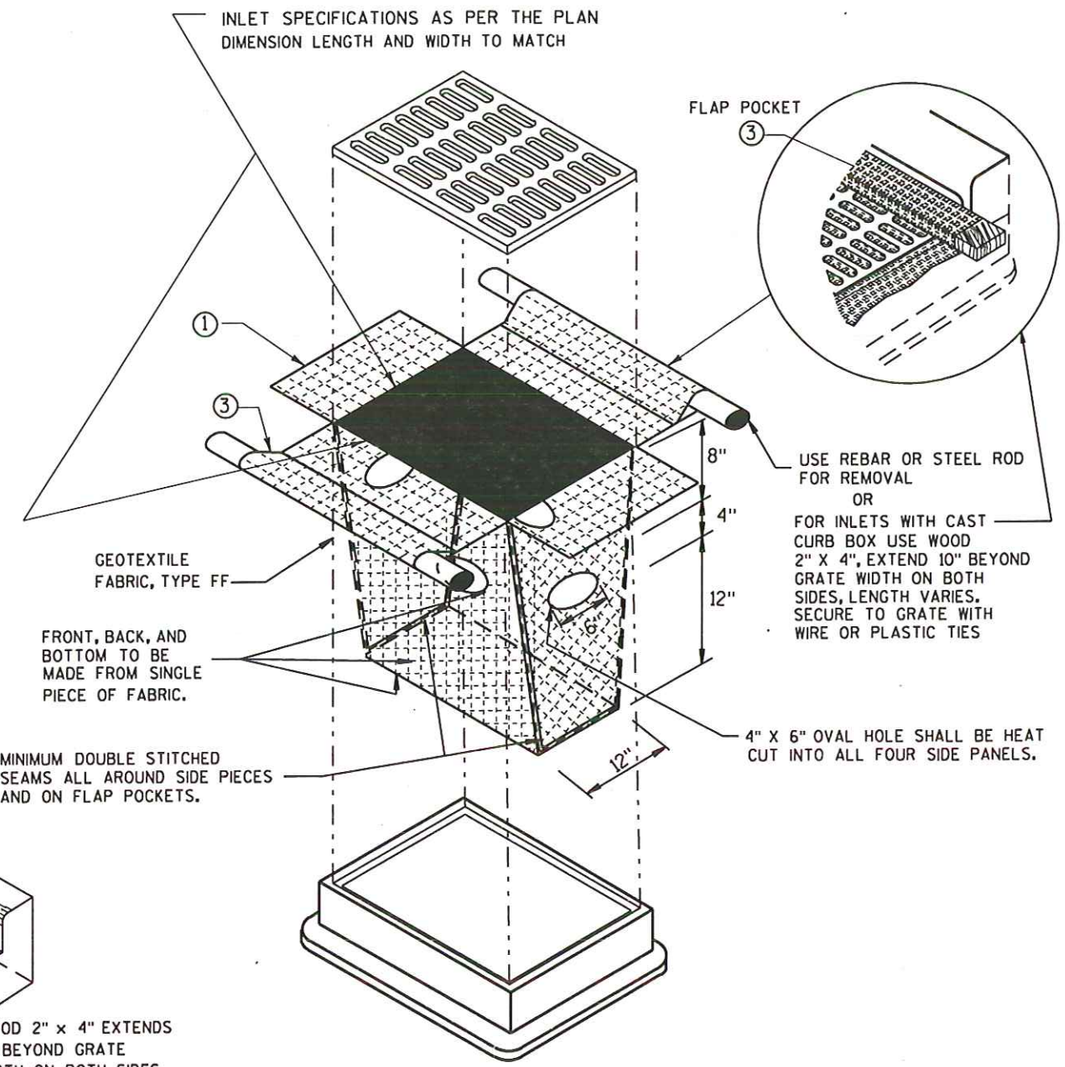

INLET PROTECTION, TYPE D

(CAN BE INSTALLED IN ANY INLET TYPE WITH OR WITHOUT A CURB BOX AS PER NOTE ②)

GENERAL NOTES

INLET PROTECTION DEVICES SHALL BE MAINTAINED OR REPLACED AT THE DIRECTION OF THE ENGINEER.

MANUFACTURED ALTERNATIVES APPROVED AND LISTED ON THE DEPARTMENT'S EROSION CONTROL PRODUCT ACCEPTABILITY LIST MAY BE SUBSTITUTED.

WHEN REMOVING OR MAINTAINING INLET PROTECTION, CARE SHALL BE TAKEN SO THAT THE SEDIMENT TRAPPED ON THE GEOTEXTILE FABRIC DOES NOT FALL INTO THE INLET. ANY MATERIAL FALLING INTO THE INLET SHALL BE REMOVED IMMEDIATELY.

① FINISHED SIZE, INCLUDING FLAP POCKETS WHERE REQUIRED, SHALL EXTEND A MINIMUM OF 10" AROUND THE PERIMETER TO FACILITATE MAINTENANCE OR REMOVAL.

② FOR INLET PROTECTION, TYPE C (WITH CURB BOX), AN ADDITIONAL 18" OF FABRIC IS WRAPPED AROUND THE WOOD AND SECURED WITH STAPLES. THE WOOD SHALL NOT BLOCK THE ENTIRE HEIGHT OF THE CURB BOX OPENING.

③ FLAP POCKETS SHALL BE LARGE ENOUGH TO ACCEPT WOOD 2X4.

INSTALLATION NOTES

TYPE B & C

TRIM EXCESS FABRIC IN THE FLOW LINE TO WITHIN 3" OF THE GRATE.

THE CONTRACTOR SHALL DEMONSTRATE A METHOD OF MAINTENANCE, USING A SEWN FLAP, HAND HOLDS OR OTHER METHOD TO PREVENT ACCUMULATED SEDIMENT FROM ENTERING THE INLET.

TYPE D

DO NOT INSTALL INLET PROTECTION TYPE D IN INLETS SHALLOWER THAN 30", MEASURED FROM THE BOTTOM OF THE INLET TO THE TOP OF THE GRATE.

TRIM EXCESS FABRIC IN THE FLOW LINE TO WITHIN 3" OF THE GRATE.

THE INSTALLED BAG SHALL HAVE A MINIMUM SIDE CLEARANCE, BETWEEN THE INLET WALLS AND THE BAG, MEASURED AT THE BOTTOM OF THE OVERFLOW HOLES, OF 3". WHERE NECESSARY THE CONTRACTOR SHALL CINCH THE BAG, USING PLASTIC ZIP TIES, TO ACHIEVE THE 3" CLEARANCE. THE TIES SHALL BE PLACED AT A MAXIMUM OF 4" FROM THE BOTTOM OF THE BAG.

INLET PROTECTION
TYPE A, B, C, AND D

STATE OF WISCONSIN
DEPARTMENT OF TRANSPORTATION

APPROVED
10/16/02
DATE
FHWA

CHIEF ROADWAY DEVELOPMENT ENGINEER

6
S.D.D. 8 E 10-2

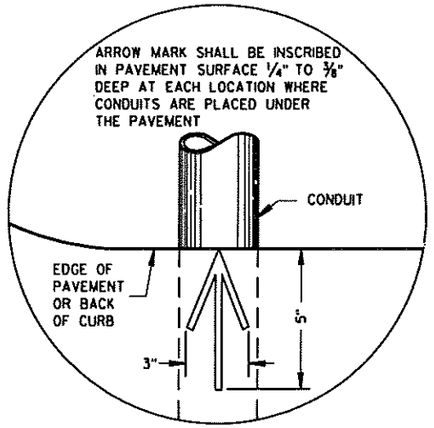

PLAN VIEW
ARROW MARK

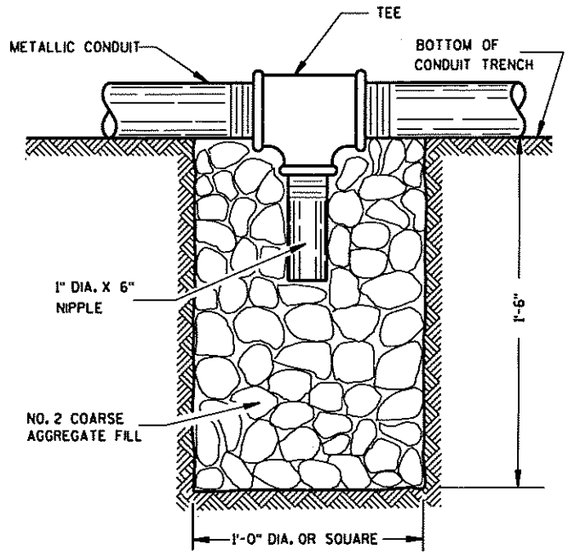

NOTE: INSTALL AT LOCATIONS WHERE METALLIC CONDUITS CANNOT BE PITCHED TO DRAIN INTO A PULL BOX.

DRAIN SUMP FOR METALLIC CONDUIT

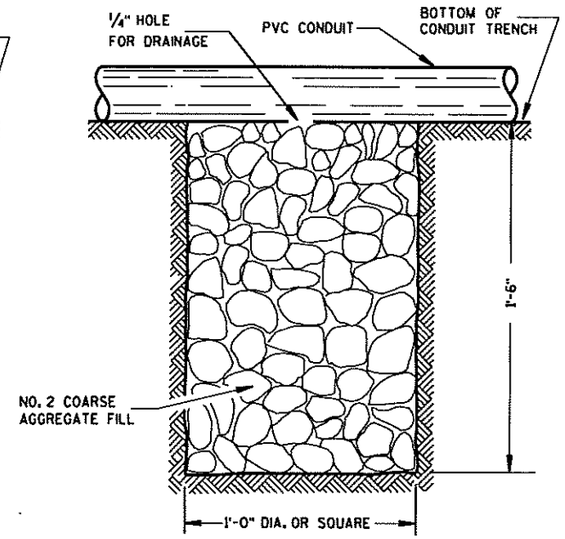

NOTE: INSTALL AT LOCATIONS WHERE PVC CONDUITS CANNOT BE PITCHED TO DRAIN INTO A PULL BOX.

DRAIN SUMP FOR PVC CONDUIT

GENERAL NOTES

DETAILS OF CONSTRUCTION, MATERIALS AND WORKMANSHIP NOT SHOWN ON THIS DRAWING SHALL CONFORM TO THE PERTINENT REQUIREMENTS OF THE CONTRACT.

METALLIC (STANDARD SPECIFICATION 652.2.2) OR NONMETALLIC (STANDARD SPECIFICATION 652.2.3) CONDUIT SHALL BE FURNISHED AND PLACED AS SHOWN.

DEPTH OF CONDUIT INSTALLED BELOW THE TRAVELED WAY SHALL BE 24 INCHES MINIMUM AND 36 INCHES MAXIMUM.

DEPTH OF CONDUIT INSTALLED THAT IS NOT BELOW THE TRAVELED WAY SHALL BE 18 INCHES MINIMUM AND 36 INCHES MAXIMUM.

ANY EXCEPTION TO THE MAXIMUM DEPTH SHALL BE ONLY WITH THE WRITTEN APPROVAL OF THE ENGINEER.

THE TRENCH SHALL NOT BE BACKFILLED PRIOR TO INSPECTION OF THE CONDUIT.

ALL METALLIC CONDUIT RACEWAY ENDS SHALL BE REAMED AND THREADED.

ALL METALLIC CONDUIT IN WHICH WIRE OR CABLE IS TO BE INSTALLED SHALL BE BUSHED WITH APPROVED THREADED BUSHINGS BEFORE INSTALLATION OF THE WIRE OR CABLE.

ALL METALLIC CONDUITS IN WHICH WIRE OR CABLE IS NOT TO BE INSTALLED SHALL BE CAPPED WITH THREADED PROTECTIVE CAPS, AS APPROVED BY THE ENGINEER.

ALL NONMETALLIC CONDUIT SHALL BE CAPPED OR PLUGGED IMMEDIATELY AFTER INSTALLATION AND SHALL REMAIN CAPPED OR PLUGGED UNTIL WIRE/CABLES ARE INSTALLED.

NONMETALLIC CONDUITS IN WHICH WIRE OR CABLE IS NOT BEING INSTALLED SHALL REMAIN CAPPED OR PLUGGED.

BENDING OF PVC ELECTRICAL CONDUIT SHALL BE ACCOMPLISHED BY USING A BLANKET OR EMERSION TYPE TANK DESIGNED FOR THE PURPOSE OF BENDING PVC ELECTRICAL CONDUIT.

ALL CUT ENDS SHALL BE TRIMMED INSIDE AND OUTSIDE TO REMOVE ALL ROUGH EDGES ON NONMETALLIC CONDUIT. (SEE NEC 347.5)

WHEN REQUIRED TO CONNECT NONMETALLIC CONDUIT TO METALLIC CONDUIT, ONLY U.L. LISTED ADAPTER FITTINGS SHALL BE USED.

PRIOR TO CONDUIT ACCEPTANCE, CONDUIT CAPS OR PLUGS SHALL BE REMOVED, AND THE CAPS, PLUGS AND CONDUIT ENDS SHALL BE THOROUGHLY CLEANED AND THEN THE CAPS OR PLUGS REINSTALLED TO ENSURE THAT THE CAPS OR PLUGS CAN BE EASILY REMOVED IN THE FUTURE.

ALL CONDUIT BEING FURNISHED AND INSTALLED SHALL HAVE THE U.L. LABEL FIRMLY ATTACHED.

CONDUIT RUNS SHALL BE THE SAME SIZE OF CONDUIT FROM ONE END TO THE OTHER (FROM PULL BOX TO PULL BOX-OR-JUNCTION BOX TO JUNCTION BOX-OR-BASE TO BASE, ETC.).

POLY ROPE OR A PULL WIRE SHALL BE INSTALLED AS STATED IN THE STANDARD SPECIFICATION, ITEM 652.3.11.

ALL CONDUIT RUNS SHALL BE STRAIGHT (WITHOUT BENDS) FROM PULL BOX TO PULL BOX, PULL BOX TO BASE AND BASE TO BASE AS SHOWN ON THE PLANS.

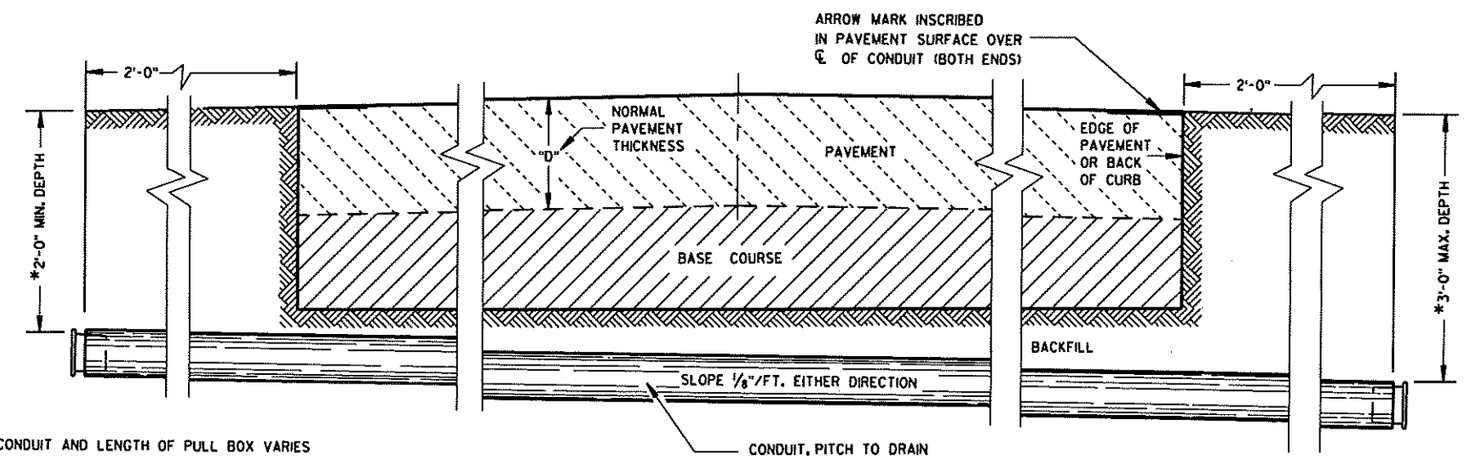

*DEPTH OF CONDUIT AND LENGTH OF PULL BOX VARIES WITH HEIGHT OF CURB USED. ALSO SEE PULL BOX S.D.D. 9B4

SIDE ELEVATION
DETAIL FOR CONDUIT UNDER PAVED HIGHWAYS

CONDUIT

STATE OF WISCONSIN
DEPARTMENT OF TRANSPORTATION

APPROVED
10/23/03
DATE

STATE ELECTRICAL ENGINEER FOR HIGHWAYS

FHWA

6

S.D.D. 9 B 2-7

6

S.D.D. 9 B 2-7

TABLE OF NOMINAL DIMENSIONS AND WEIGHTS

DIMENSION IN INCHES		TYPE OF PIPE									
		CORRUGATED STEEL									POLYETHYLENE SDR 32.5
PIPE DIAMETER (INSIDE)	A	12	12	12	18	18	18	24	24	24	12
PIPE LENGTH **	B	24	30	36	24	30	36	36	42	48	24
WALL THICKNESS	C	0.064	0.064	0.064	0.064	0.064	0.064	0.064	0.064	0.064	0.4
COVER	D	10 1/4	10 1/4	10 1/4	16 1/4	16 1/4	16 1/4	22 1/4	22 1/4	22 1/4	10 1/4
FRAME	E	14 1/2	14 1/2	14 1/2	20 1/2	20 1/2	20 1/2	26 1/2	26 1/2	26 1/2	14 1/2
FRAME	F	8 1/2	8 1/2	8 1/2	14 1/2	14 1/2	14 1/2	20 1/2	20 1/2	20 1/2	8 1/2
FRAME	G	11 1/2	11 1/2	11 1/2	17 1/2	17 1/2	17 1/2	23 1/2	23 1/2	23 1/2	11 1/2
WEIGHT IN POUNDS *											
FRAME AND COVER		60	60	60	110	110	110	155	155	155	60

* THE ACTUAL WEIGHT OF THE MANHOLE FRAME AND COVER MAY VARY WITHIN 5 PERCENT PLUS OR MINUS OF THE WEIGHTS SHOWN.

** NORMALLY USED LENGTHS. THE PROJECT ENGINEER SHALL DETERMINE IF PIPE LENGTHS, OTHER THAN THOSE SPECIFIED, SHALL BE USED, TO A MAXIMUM OF 48" (CONTINUOUS LENGTH, NON-SPLICED). THE ADDITIONAL LENGTH SHALL BE INCIDENTAL TO THE PULL BOX BID PRICE.

GENERAL NOTES

DETAILS OF CONSTRUCTION, MATERIALS AND WORKMANSHIP NOT SHOWN ON THIS DRAWING SHALL CONFORM TO THE PERTINENT REQUIREMENTS OF THE CONTRACT.

ALL FRAMES AND COVERS SHALL BE HEAVY DUTY TYPE, SUITABLE FOR VEHICULAR TRAFFIC LOADS.

PULL BOXES LOCATED IN THE ROADWAYS SHALL HAVE LOCKING COVERS.

ENTRANCE HOLES INTO PULL BOXES SHALL BE CUT WITH A CIRCULAR HOLE SAW OR HYDRAULIC CONDUIT PUNCH. HOLE SIZE SHALL BE THE OUTSIDE DIAMETER OF THE CONDUIT THAT IS TO FIT IN THE OPENING PLUS NO MORE THAN 1/4".

THE CONTRACTOR SHALL NOT INSTALL WIRE IN ANY PULL BOX UNTIL ITS INSTALLATION HAS BEEN INSPECTED AND ACCEPTED BY THE ENGINEER.

GROUNDING LUGS (MECHANICAL CONNECTORS) SHALL BE U.L. LISTED AND APPROVED FOR USE WITH COPPER WIRE. THE MECHANICAL CONNECTION (INSIDE AND OUTSIDE) TO THE PULL BOX, SHALL BE TOTALLY AND PERMANENTLY SEALED WITH A SILICONE OR RUBBERIZED CAULKING COMPOUND AS APPROVED BY THE ENGINEER.

GROUNDING LUGS ARE NOT REQUIRED IN PULL BOXES WHEN VOLTAGES OF LESS THAN 50 VOLTS AC ARE THE ONLY VOLTAGES ENCOUNTERED IN THE BOXES.

RODENT WIRE SCREEN SHALL BE 1/8" STAINLESS STEEL MESH AND BE INSTALLED WITH A STAINLESS STEEL HOSE CLAMP OF SUFFICIENT SIZE.

ALL METALLIC CONDUIT IN WHICH WIRE AND/OR CABLE IS TO BE INSTALLED, SHALL BE BUSHED BEFORE INSTALLATION OF THE WIRE AND/OR CABLE.

S.D.D. 9B2, "CONDUIT", APPLIES TO THIS DRAWING.

WHEN PULL BOXES ARE INSTALLED FOR FUTURE USE, DO NOT INSTALL THE EQUIPMENT GROUNDING LUG, THE EQUIPMENT GROUNDING LUG, THE EQUIPMENT GROUNDING ELECTRODE AND THE EQUIPMENT GROUNDING CONDUCTOR SHALL BE REQUIRED AND INSTALLED UNDER A FUTURE WIRING CONTRACT.

IF PULL BOX EQUIPMENT GROUNDING IS REQUIRED USING AN EQUIPMENT GROUNDING ELECTRODE IN EACH PULL BOX, THE EQUIPMENT GROUNDING ELECTRODE SHALL BE 5/8" X 8'-0", COPPERCLAD AND BE EXOTHERMICALLY WELDED TO A #4 AWG, COPPER, STRANDED WIRE (BARE OR GREEN INSULATED). THE #4 AWG WIRE SHALL BE 4 FEET IN LENGTH, NEATLY COILED, TAPED AND AVAILABLE FOR USE WHEN REQUIRED.

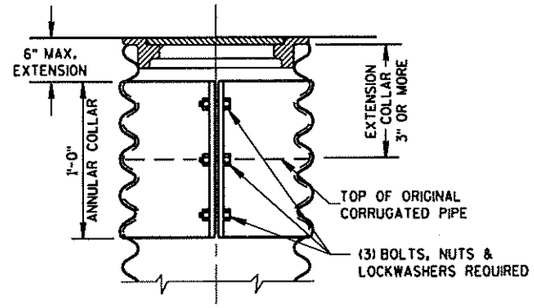

CORRUGATED PIPE EXTENDER

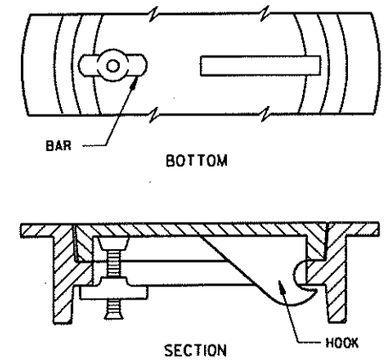

ALTERNATE COVER (LOCKING)

TIGHTENING BAR TYPE

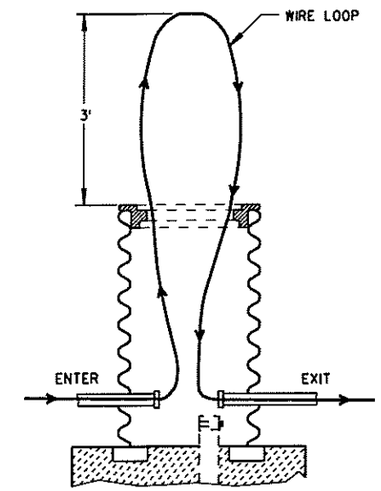

MEASUREMENT DETAIL FOR WIRE/CABLE IN THE PULL BOX

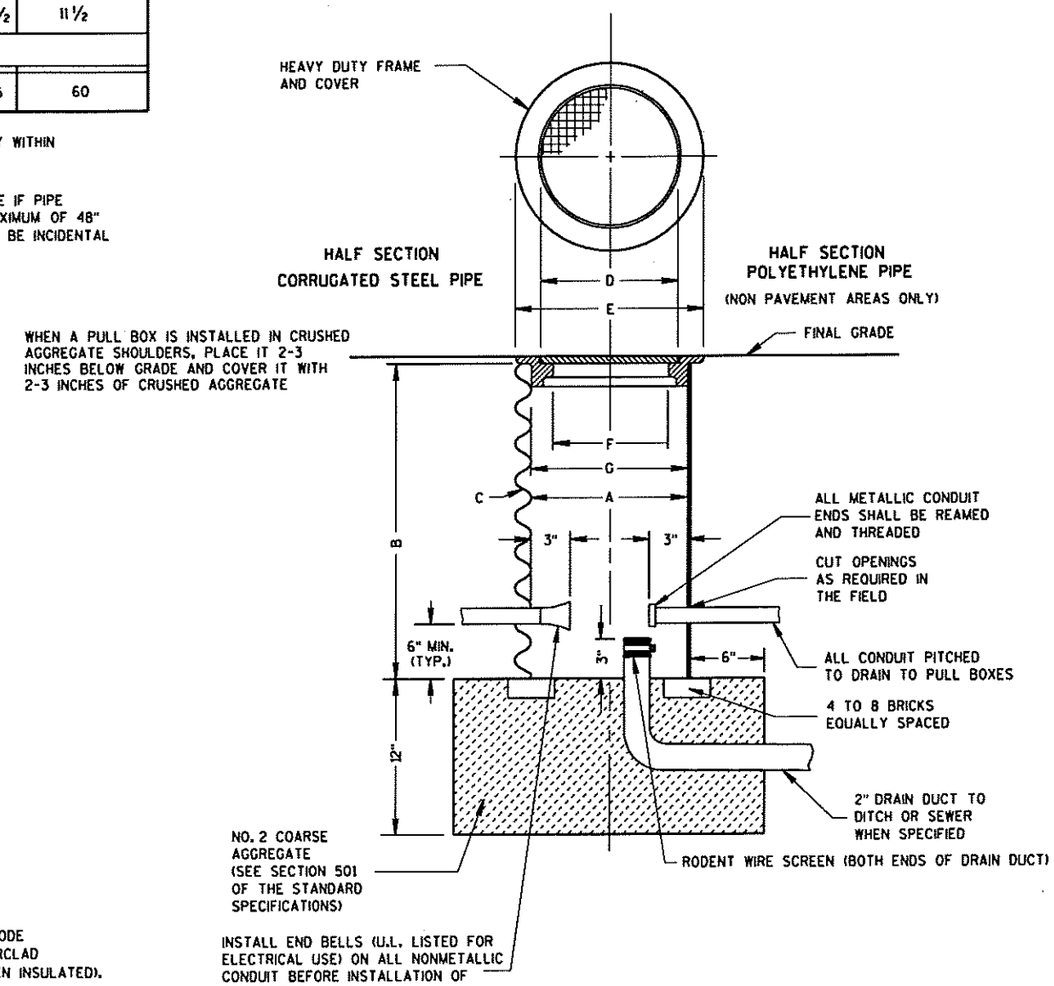

PULL BOX

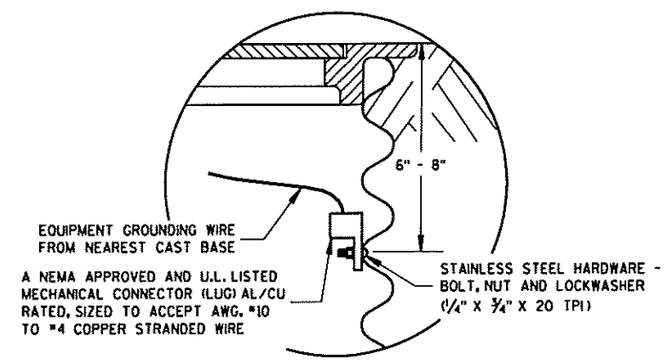

EQUIPMENT GROUNDING LUG AND LOCATION IN STEEL PULL BOXES

PULL BOX

STATE OF WISCONSIN
DEPARTMENT OF TRANSPORTATION

APPROVED
5/26/05 — DATE
/S/ Balu Ananthanarayanan — STATE ELECTRICAL ENGINEER FOR HIGHWAYS
FHWA

6

6

S.D.D. 9 B 4-8

S.D.D. 9 B 4-8

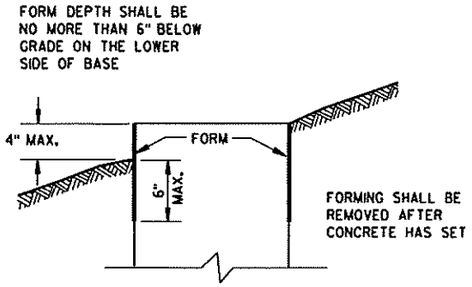

FORMING DETAIL

QUANTITY REQUIREMENTS	CONCRETE BASE TYPE		
	1	2	5
APPROX. CUBIC YARDS OF CONCRETE	0.40	0.57	0.40
LBS. OF HOOP BAR STEEL	NONE	23	16
LBS. OF VERTICAL BAR STEEL	NONE	60	18

GENERAL NOTES

DETAILS OF CONSTRUCTION, MATERIALS AND WORKMANSHIP NOT SHOWN ON THIS DRAWING SHALL CONFORM TO THE PERTINENT REQUIREMENTS OF THE CONTRACT.

BASES SHALL BE EXCAVATED BY USE OF A CIRCULAR AUGER.

TOP SURFACES OF CONCRETE BASES SHALL BE TROWEL FINISHED SMOOTH AND LEVEL.

CONDUIT SIZES AND LOCATIONS SHALL BE AS SHOWN ON THE PLANS.

THE FINAL OR TERMINATING CONCRETE BASE IN A CONDUIT RUN SHALL HAVE A 6" EXIT STUB INSTALLED FOR FUTURE CABLING USE. THE EXIT STUB SHALL BE SIZED AS USED THROUGHOUT THE CONDUIT RUN AS SHOWN AT THE ENTRANCE OF THE BASE.

MINIMUM BENDING RADIUS OF CONDUIT IS EQUAL TO 6 X THE DIAMETER.

CONDUIT HEIGHT ABOVE CONCRETE BASES SHALL BE 1 INCH. ALL METALLIC CONDUIT ENDS SHALL BE REAMED AND THREADED.

ALL CONDUIT ENDS AT THE TOP OF CONCRETE BASES SHALL BE CAPPED IF METALLIC OR PLUGGED IF NONMETALLIC IMMEDIATELY AFTER PLACEMENT AND BEFORE CONCRETE IS POURED. CONDUITS IN WHICH WIRE OR CABLE IS NOT INSTALLED SHALL REMAIN CAPPED OR PLUGGED.

GENERAL NOTES (CONTINUED)

BELL ENDS SHALL BE INSTALLED ON ALL PVC CONDUIT EXPOSED AT THE TOP OF CONCRETE BASES BEFORE INSTALLATION OF CABLE OR WIRE.

ENDS OF CONDUIT INSTALLED BELOW GRADE FOR FUTURE USE SHALL BE CAPPED IF METALLIC OR PLUGGED IF NONMETALLIC.

WHEN REQUIRED TO CONNECT NONMETALLIC CONDUIT TO METALLIC CONDUIT, ONLY ADAPTER FITTINGS, U.L. LISTED FOR ELECTRICAL USE, SHALL BE USED.

IF A BASE REQUIRES A DEEP FORM BECAUSE OF LOOSE DIRT OR FILL, THE FORM SHALL BE REMOVED BEFORE BACKFILLING AROUND THE BASE. BACKFILL SHALL BE TAMPED TIGHT AGAINST THE BARE CONCRETE BASE IN LAYERS OF 1FOOT OR LESS.

A NO. 4 AWG, STRANDED COPPER EQUIPMENT GROUNDING CONDUCTOR SHALL BE EXOTHERMICALLY WELDED TO THE EQUIPMENT GROUNDING ELECTRODE (GROUND ROD) FOR TYPE 2 AND TYPE 5 BASES.

THE EQUIPMENT GROUNDING CONDUCTOR SHALL BE FURNISHED AND INSTALLED TO ENTER THE BASE OF THE TYPE 2 AND TYPE 5 BASES THROUGH A 1 INCH CONDUIT INSTALLED FOR GROUNDING PURPOSES, LEAVING A 4 FOOT COIL OF WIRE ABOVE THE CONCRETE BASE. THE EQUIPMENT GROUNDING CONDUCTOR SHALL BE NEATLY COILED AND THE COILS TIED TOGETHER.

ANCHOR RODS SHALL BE THREADED 12" IN LENGTH ON EACH END OF THE ROD. ANCHOR RODS SHALL BE MANUFACTURED IN ACCORDANCE WITH SECTION 654.2.1 AND 641.2.2 OF THE STANDARD SPECIFICATIONS, ASTM A-449, OR ASTM A-687 (GRADE 105).

WASHERS AND LOCK WASHERS ARE REQUIRED ON ALL ANCHOR RODS.

WHEN ANCHOR RODS USING THE ALTERNATE "L" BEND ARE FURNISHED, THE 4" "L" BEND SHALL BE IN ADDITION TO THE SPECIFIED ANCHOR ROD BAR LENGTH. THE "L" BEND END SHALL NOT BE THREADED.

ANCHOR RODS SHALL BE INSTALLED WITH MISALIGNMENTS OF LESS THAN 1:40 FROM VERTICAL PER SECTION 5.17.6.3, AASHTO 2001 4TH EDITION STANDARD SPECIFICATIONS FOR STRUCTURAL SUPPORTS FOR HIGHWAY SIGNS, LUMINARIES AND TRAFFIC SIGNALS.

WELDING OF THE ANCHOR RODS TO THE CAGE IS UNACCEPTABLE. TIE WIRES SHALL BE USED.

BAR STEEL REINFORCEMENT SHALL BE COATED WITH POWDERED EPOXY RESIN IN ACCORDANCE WITH SECTION 505 OF THE STANDARD SPECIFICATIONS (LATEST EDITION).

(1) THE MINIMUM DEPTH OF CONDUIT EXITING THE CONCRETE BASE AND INSTALLED BELOW THE TRAVELED WAY SHALL BE 24 INCHES. THE MINIMUM DEPTH OF CONDUIT EXITING THE CONCRETE BASE THAT IS NOT INSTALLED BELOW THE TRAVELED WAY SHALL BE 18 INCHES. THE MAXIMUM DEPTH OF ALL CONDUIT SHALL BE 36 INCHES EXCEPT WITH WRITTEN APPROVAL BY THE ENGINEER.

(2) (4) 1" DIA. X 3'-6" ANCHOR RODS.

(3) (4) 1" DIA. X 5'-0" ANCHOR RODS.

(4) (6) NO. 6 X 6'-8" BAR STEEL REINFORCEMENT.

(5) (7) NO. 4 X 5'-1" BAR STEEL REINFORCEMENT @ 1'-0" C-C.

(6) (4) 1" DIA. X 3'-6" ANCHOR RODS.

(7) (6) NO.4 X 4'-8" BAR STEEL REINFORCEMENT

(8) (5) NO. 4 X 5'-1" BAR STEEL REINFORCEMENT @ 1'-0" C-C.

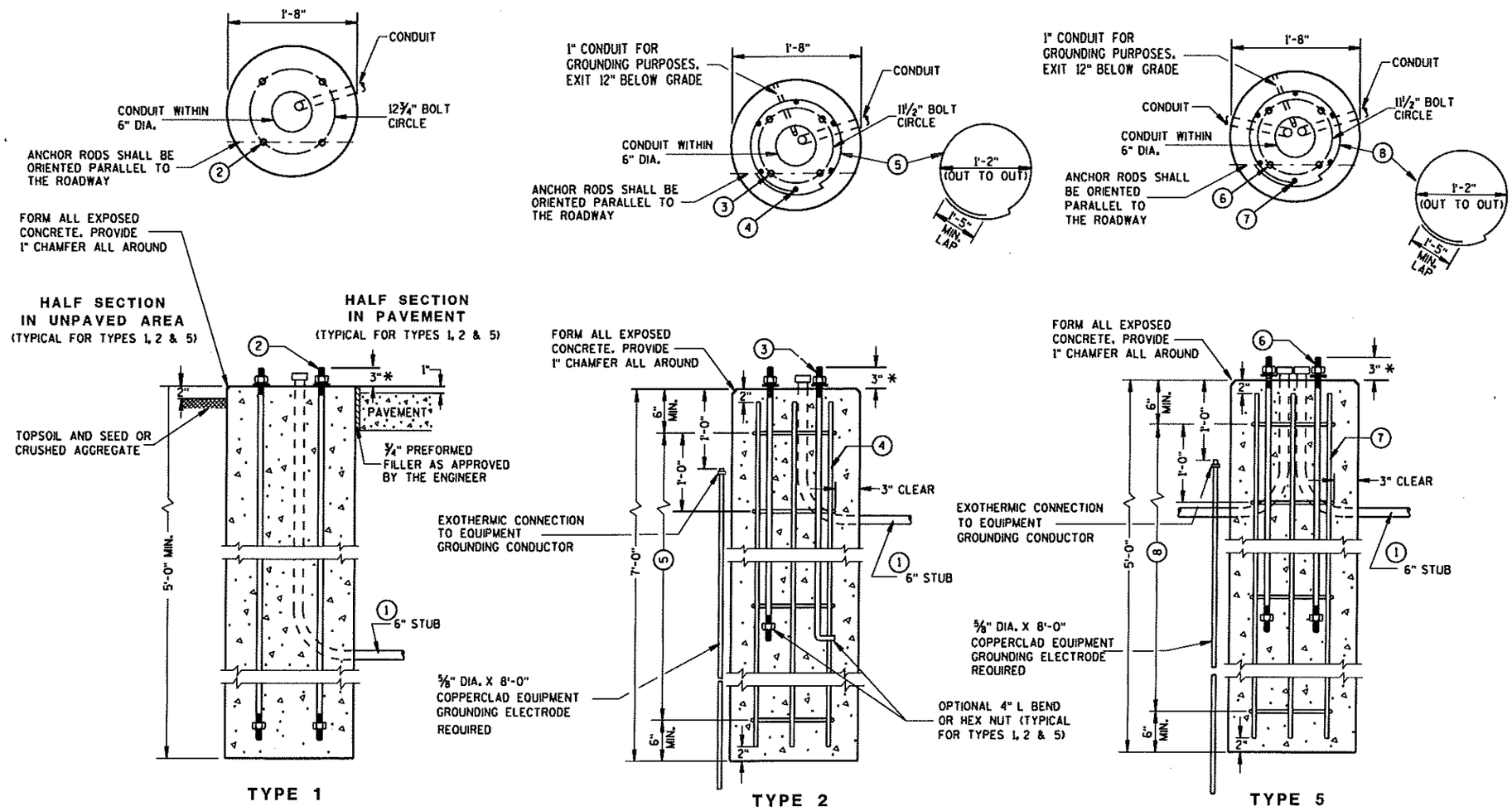

CONCRETE BASES

* ANY ANCHOR ROD PROJECTION SHORTER THAN 2¾" OR LONGER THAN 3¼" SHALL REQUIRE THE BASE TO BE REMOVED AND REPLACED AT THE CONTRACTORS EXPENSE.

CONCRETE BASES, TYPES 1, 2 & 5

STATE OF WISCONSIN
DEPARTMENT OF TRANSPORTATION

APPROVED 1/12/05 DATE
FHWA

STATE ELECTRICAL ENGINEER FOR HIGHWAYS

6

S.D.D. 9 C 2-4

S.D.D. 9 C 2-4

GENERAL NOTES

DETAILS OF CONSTRUCTION, MATERIALS AND WORKMANSHIP NOT SHOWN ON THIS DRAWING SHALL CONFORM TO THE PERTINENT REQUIREMENTS OF THE CONTRACT.

FOUR (4) BOLTS SHALL BE FURNISHED WITH EACH TRANSFORMER BASE. BOLTS SHALL BE 1" DIAMETER, 4" IN LENGTH, WITH WASHERS, LOCK WASHERS AND NUTS. BOLTS, NUTS AND WASHERS SHALL BE MANUFACTURED IN ACCORDANCE WITH SECTION 641.2.2 OF THE STANDARD SPECIFICATIONS, ASTM A-325, (92,000 YIELD) HEAVY HEX NUT AND BE GALVANIZED IN ACCORDANCE WITH ASTM A-153, CLASS C.

LEVELING SHIMS, IF NEEDED, SHALL BE DESIGNED FOR THE PURPOSE AND USED UNDER CAST BASES WHEN PLUMBING POLES OR STANDARDS DURING INSTALLATION. THE USE OF WASHERS IN LIEU OF PROPER LEVELING SHIMS IS NOT ACCEPTABLE.

SHIM LENGTH SHALL BE LONG ENOUGH TO COMPLETELY COVER THE AREA UNDER THE LENGTH AND WIDTH OF THE BASE MOUNTING FLANGE.

DOUBLE NUTTING IS NOT ACCEPTABLE FOR LEVELING OR MOUNTING PURPOSES.

A NEMA APPROVED AND U.L. LISTED MECHANICAL CONNECTOR (LUG) AL/CU RATED AND SIZED TO ACCEPT #10 AWG STRANDED WIRE, SHALL BE FURNISHED AND INSTALLED IN THE PEDESTAL AND TRANSFORMER BASES.

THE MECHANICAL CONNECTOR SHALL BE INSTALLED USING A 1/4" - 20 (TPI) STAINLESS STEEL HEX HEAD BOLT OF SUFFICIENT LENGTH TO FIRMLY ATTACH THE LUG TO THE BASE.

SHOULD THE MANNER OF ATTACHMENT OF THE LUG REQUIRE WASHERS, HEX NUTS, LOCK WASHER - THEY SHALL BE STAINLESS STEEL AS IS THE BOLT. THE MANNER OF ATTACHMENT SHALL NOT BLOCK ACCESSIBILITY TO WIRE PLACEMENT IN THE CONNECTOR.

PEDESTAL BASE COLLAR THREADING SHALL BE TAPERED AND IN ACCORDANCE WITH NATIONAL PIPE THREADING DIMENSIONS.

BASE COLLAR THREADING SHALL EXTEND INTO THE BASE COLLAR WITH SUFFICIENT DEPTH TO ACCEPT THE INSTALLATION OF TRAFFIC SIGNAL STANDARDS TO A DEPTH OF 1/2", THEN TIGHTENING TO A POINT OF BEING IMMOVABLE.

THE ACCESS DOOR SHALL BE OF THE SAME MATERIAL AS THE BASE.

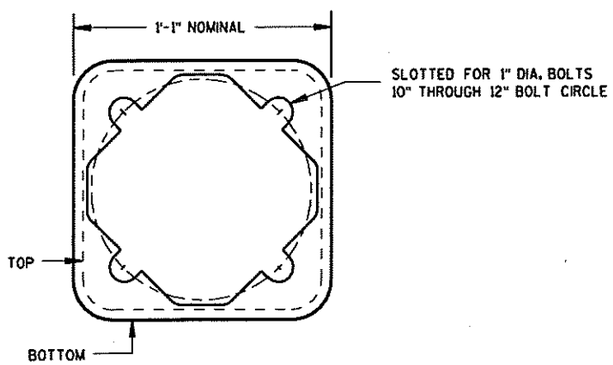

BOTTOM VIEW
(TRANSFORMER BASE)

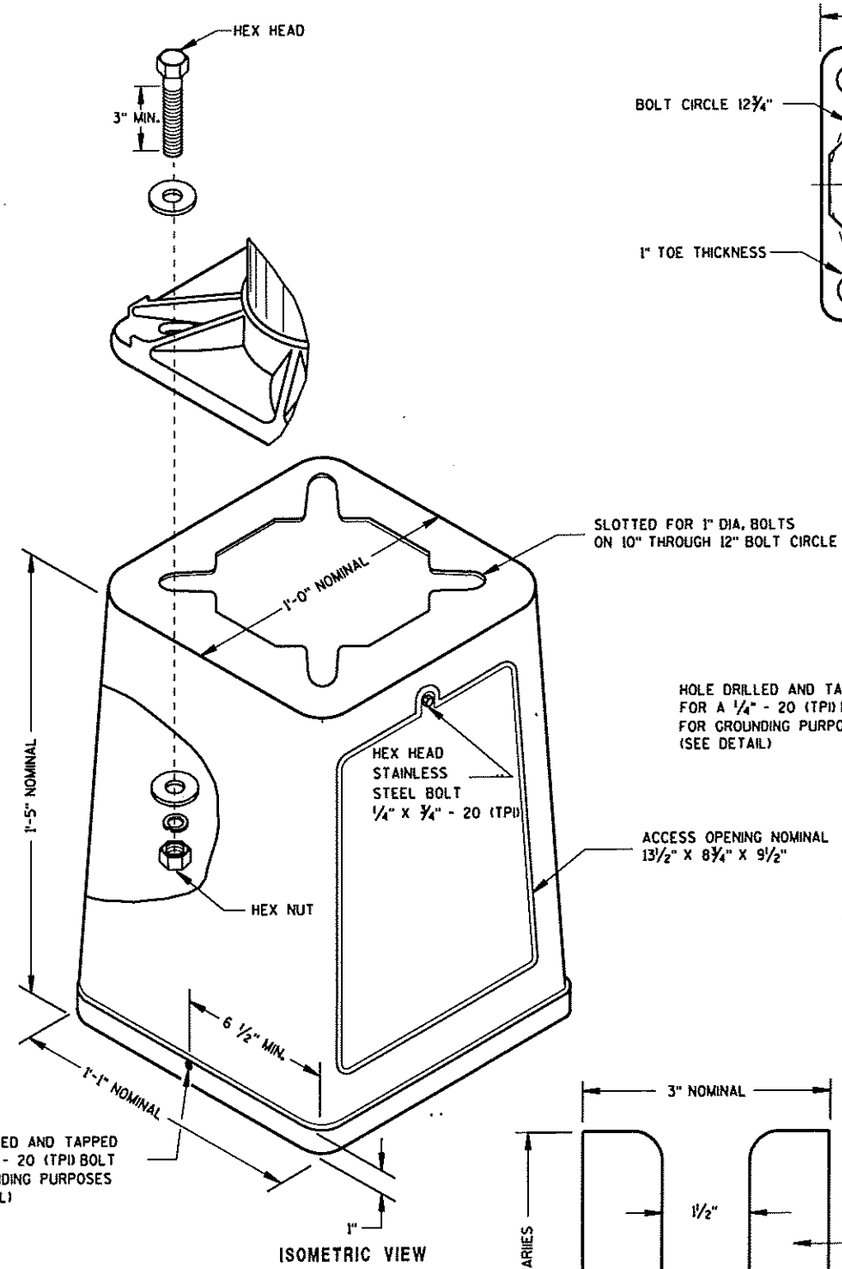

ISOMETRIC VIEW

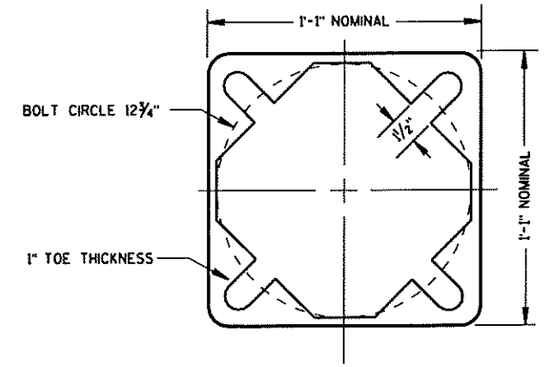

BOTTOM VIEW
(PEDESTAL BASE)

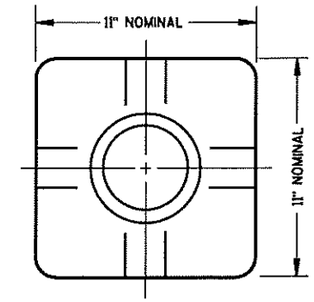

TOP VIEW
(PEDESTAL BASE)

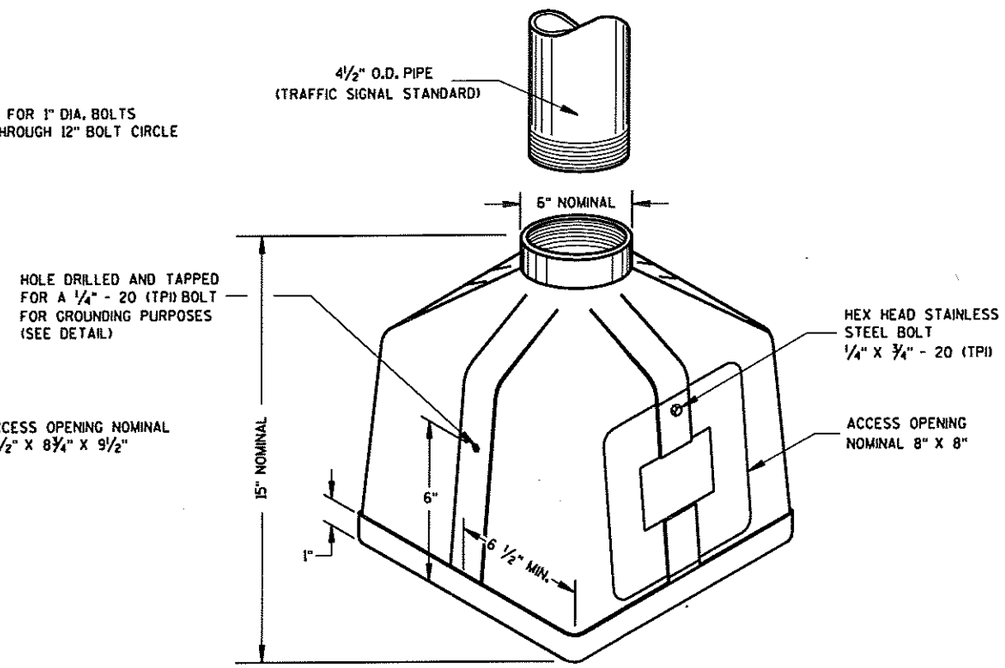

ISOMETRIC VIEW
PEDESTAL BASE

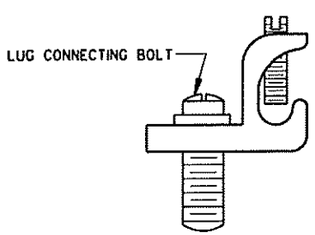

TYPICAL MECHANICAL
CONNECTOR LUG
TO BE FURNISHED WITH EACH BASE

TRANSFORMER BASE
INTENDED FOR USE WITH TYPE 2, 3, 4, 5 & 6 POLES

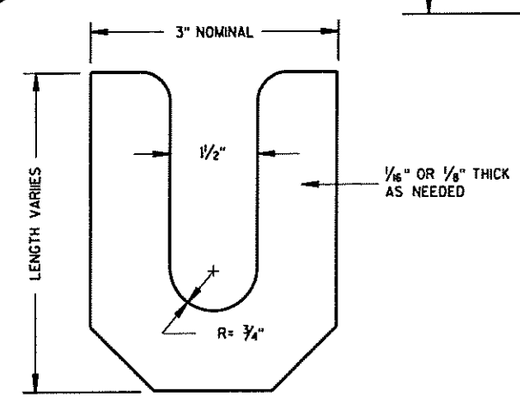

LEVELING SHIM

TRANSFORMER/PEDESTAL BASES

STATE OF WISCONSIN
DEPARTMENT OF TRANSPORTATION

APPROVED
10/21/96
DATE
STATE ELECTRICAL ENGINEER FOR HIGHWAYS
FHWA

S.D.D. 9 C 3-2

S.D.D. 9 C 3-2

CONTROL CABINET BASE TYPE	DIMENSIONS				C.Y. CONCRETE (APPROX.)
	H	I	J	K	
TYPE 6 - 30" CABINET	34"	60"	10"	17"	.64
TYPE 7 - 38" CABINET	42"	60"	10"	21"	.93
TYPE 8 - 38" CABINET	42"	72"	12"	21"	1.29
TYPE 9 - VARIABLE	54"	72"	14"	27"	1.56
TYPE 10 - POST MOUNT	AS SHOWN				.32 *

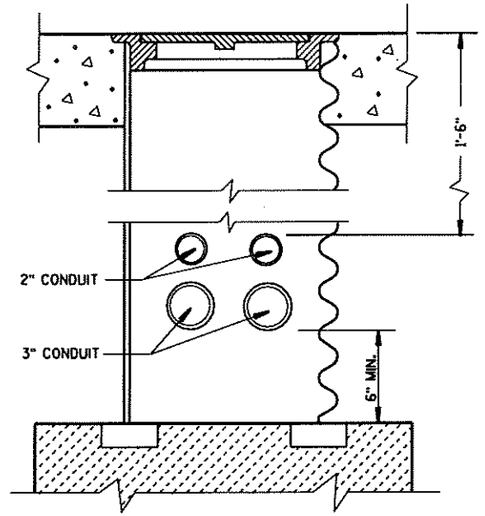

CONDUIT LOCATIONS IN 24" X 36" PULL BOX

(LEADING TO CONTROLLER CABINET BASE TYPE 6, 7, 8 AND 9)

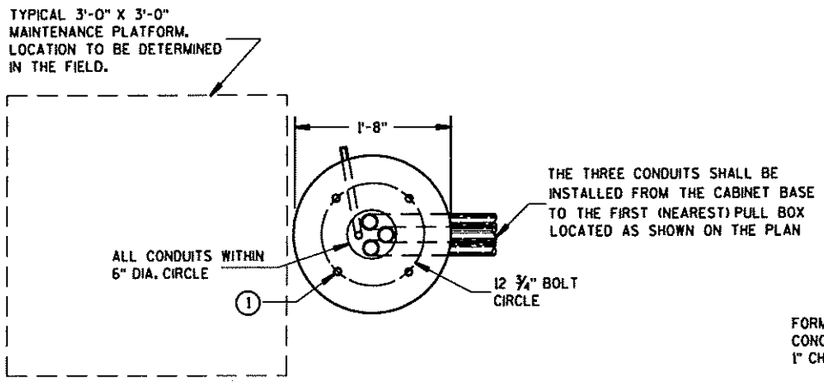

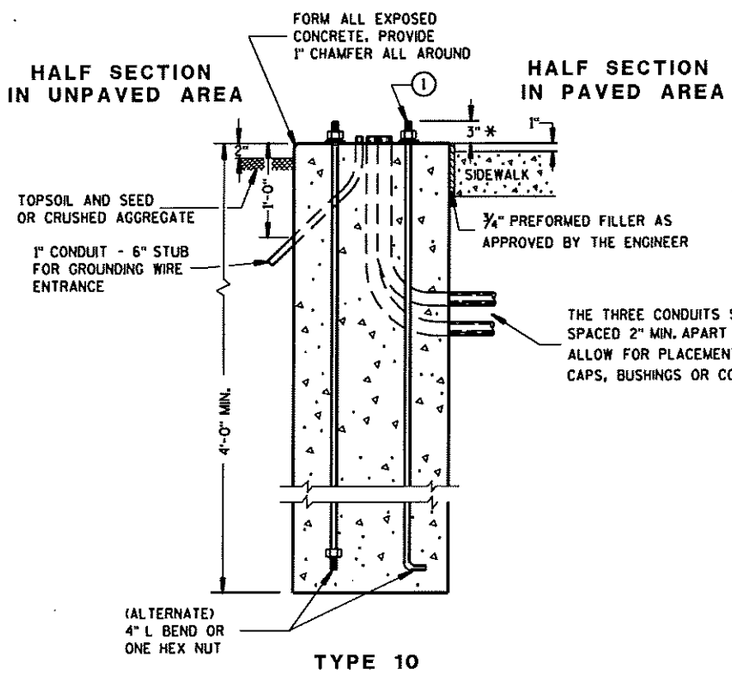

TYPE 10

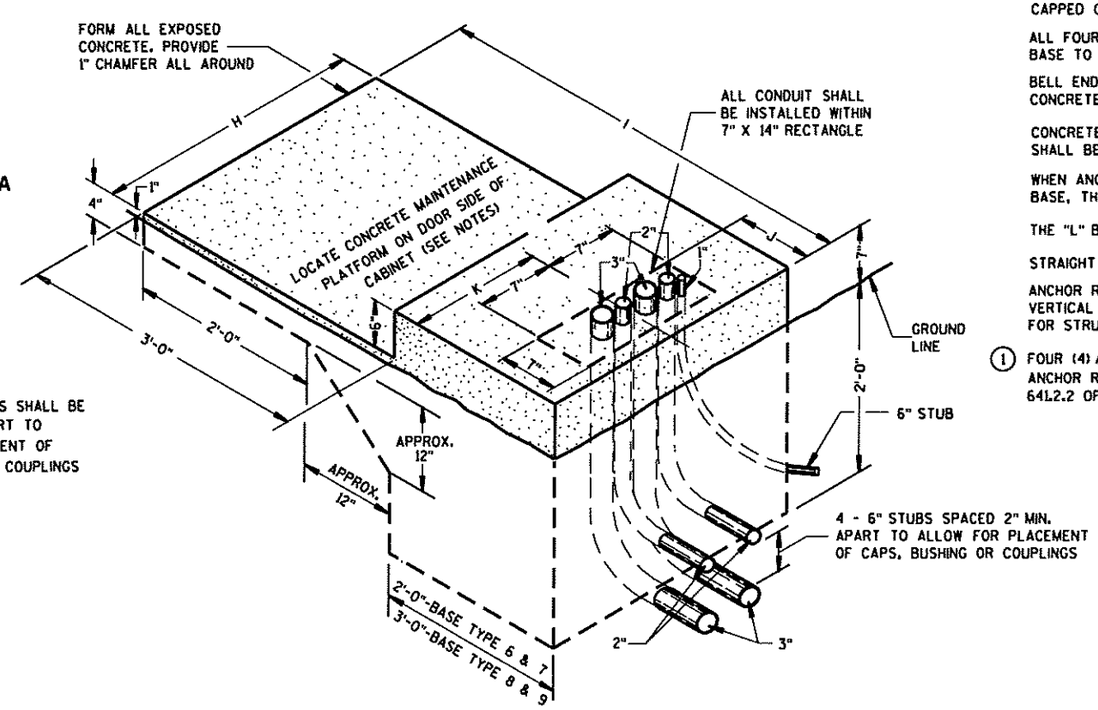

TYPE 6,7,8 AND 9 (ISOMETRIC VIEW)

* ANY ANCHOR ROD PROJECTION SHORTER THAN 2 3/4" OR LONGER THAN 3 1/4" SHALL REQUIRE THE BASE TO BE REMOVED AND REPLACED AT THE CONTRACTORS EXPENSE.

GENERAL NOTES

DETAILS OF CONSTRUCTION, MATERIALS AND WORKMANSHIP NOT SHOWN ON THIS DRAWING SHALL CONFORM TO THE PERTINENT REQUIREMENTS OF THE CONTRACT.

INSTALL FOUR 1/2 INCH MINIMUM DIAMETER X 4 INCH MINIMUM LENGTH APPROVED CONCRETE MASONRY ANCHORS TO ANCHOR THE CABINET TO TYPE 6, 7, 8, AND 9 BASES. THE ANCHOR STUDS SHALL BE LOCATED AS DIRECTED BY THE ENGINEER TO PROPERLY ANCHOR THE CONTROL CABINET TO THE BASE.

WHEN REQUIRED TO CONNECT NONMETALLIC CONDUIT TO METALLIC CONDUIT, ONLY ADAPTER FITTINGS, U.L. LISTED FOR ELECTRICAL USE, SHALL BE USED.

CONDUIT HEIGHT ABOVE THE CONCRETE BASE SHALL BE 1 INCH.

DEPTH OF CONDUIT INSTALLED BELOW THE TRAVELED WAY SHALL BE 24 INCHES MINIMUM AND 36 INCHES MAXIMUM.

DEPTH OF CONDUIT INSTALLED THAT IS NOT BELOW THE TRAVELED WAY SHALL BE 18 INCHES MINIMUM AND 36 INCHES MAXIMUM.

ANY EXCEPTION TO THE MAXIMUM DEPTH SHALL BE ONLY WITH THE WRITTEN APPROVAL OF THE ENGINEER.

CONTROL CABINET BASE TOP SURFACES SHALL BE TROWEL FINISHED SMOOTH AND LEVEL.

WHEN A TYPE 10 CONTROL CABINET BASE IS USED TO POST MOUNT A CONTROL CABINET, A 36" SQUARE 4" THICK CONCRETE MAINTENANCE PLATFORM SHALL BE REQUIRED ON THE DOOR SIDE OF THE CABINET. THE TOP 1 INCH SHALL BE ABOVE FINISHED GRADE AND BE BROOM FINISHED AND LEVEL.

MAINTENANCE PLATFORMS ARE NOT REQUIRED WHEN THE SURROUNDING AREA IS PAVED.

MINIMUM BENDING RADIUS OF CONDUIT = 6 X THE DIAMETER.

ALL METALLIC CONDUIT ENDS SHALL BE REAMED AND THREADED.

ALL CONDUIT ENDS AT THE TOP OF CONCRETE BASES SHALL BE CAPPED IF METALLIC OR PLUGGED IF NONMETALLIC IMMEDIATELY AFTER PLACEMENT AND BEFORE CONCRETE IS POURED. CONDUITS IN WHICH WIRE OR CABLE IS NOT BEING INSTALLED SHALL REMAIN CAPPED OR PLUGGED.

ALL FOUR (TWO INCH AND THREE INCH) CONDUIT SHALL BE INSTALLED FROM THE CABINET BASE TO THE FIRST (NEAREST PULL BOX LOCATED AS SHOWN ON THE PLANS.

BELL ENDS SHALL BE INSTALLED ON ALL PVC CONDUIT EXPOSED AT THE TOP OF THE CONCRETE BASE BEFORE INSTALLATION OF CABLE OR WIRE.

CONCRETE FORM DEPTH BELOW FINISHED GRADE SHALL BE 6" MAXIMUM. CONCRETE FORMS SHALL BE REMOVED AFTER CONCRETE HAS SET.

WHEN ANCHOR RODS USING THE ALTERNATE L BEND ARE FURNISHED FOR THE TYPE 10 BASE, THE 4" L BEND SHALL BE IN ADDITION TO THE SPECIFIED ANCHOR ROD BAR LENGTH.

THE "L" BEND SHALL NOT BE THREADED.

STRAIGHT ANCHOR RODS SHALL BE THREADED 12" IN LENGTH ON EACH END OF THE ROD.

ANCHOR RODS SHALL BE INSTALLED WITH MISALIGNMENTS OF LESS THAN 1:40 FROM VERTICAL PER SECTION 5.17.6.3, AASHTO 2001 4TH EDITION STANDARD SPECIFICATIONS FOR STRUCTURAL SUPPORTS FOR HIGHWAY SIGNS, LUMINARIES AND TRAFFIC SIGNALS.

(1) FOUR (4) ANCHOR RODS, 1" DIA. X 3'-6"
ANCHOR RODS SHALL BE MANUFACTURED IN ACCORDANCE WITH SECTION 654.2.1 AND 641.2.2 OF THE STANDARD SPECIFICATIONS.

CONCRETE CONTROL CABINET BASES

CONCRETE CONTROL CABINET BASES

STATE OF WISCONSIN
DEPARTMENT OF TRANSPORTATION

APPROVED
3/16/05
DATE
STATE ELECTRICAL ENGINEER FOR HIGHWAYS
FHWA

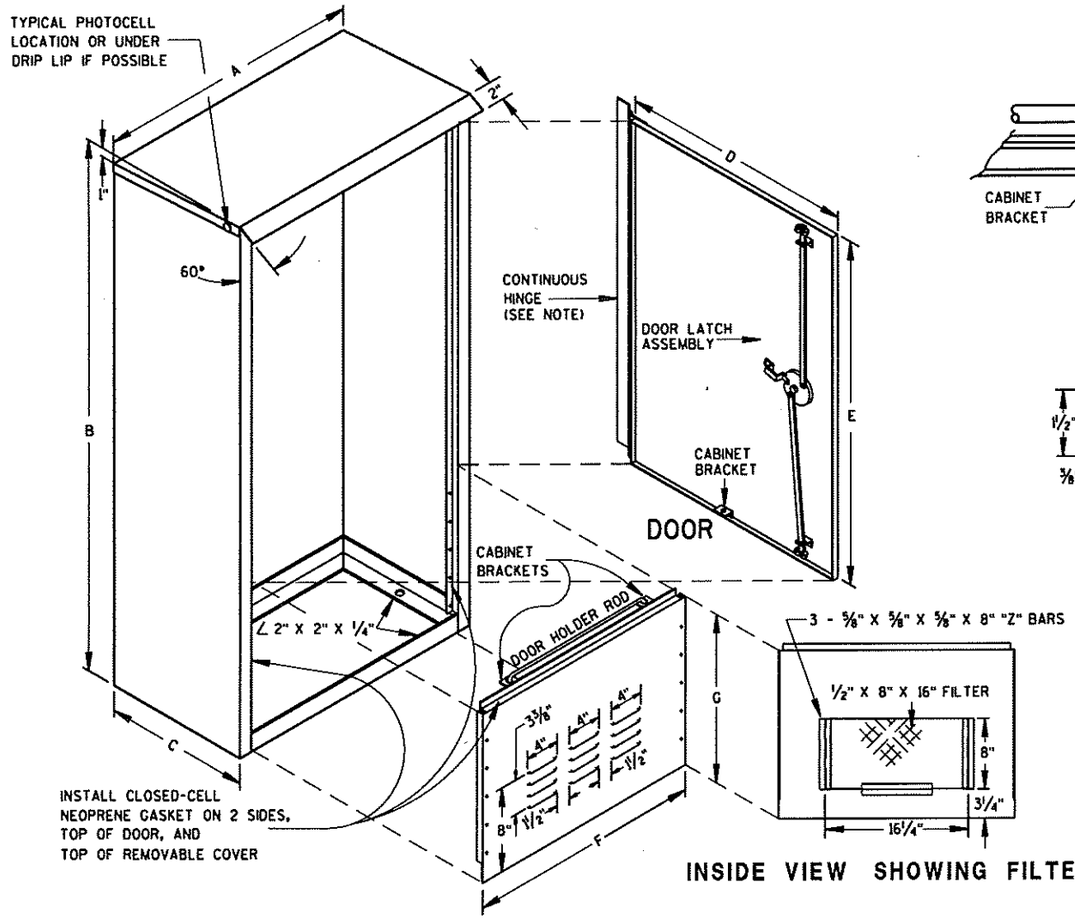

INSIDE VIEW SHOWING FILTER

REMOVABLE COVER

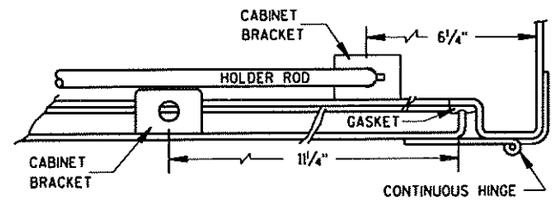

HINGE & DOOR HOLDER

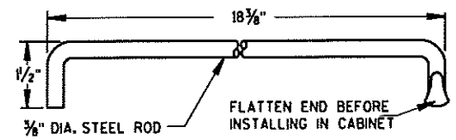

HOLDER ROD

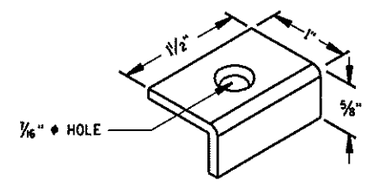

CABINET BRACKET

GENERAL NOTES

DETAILS OF CONSTRUCTION, MATERIALS AND WORKMANSHIP NOT SHOWN ON THIS DRAWING SHALL CONFORM TO THE PERTINENT REQUIREMENTS OF THE STANDARD SPECIFICATIONS AND APPLICABLE SPECIAL PROVISIONS.

PRIME WITH PHOSPHATE TREATMENT AND PRIMER.

FINISH EXTERIOR SURFACES WITH RUSTOLEUM #906 SILVER GRAY OR APPROVED EQUAL.

FINISH INTERIOR WITH RUSTOLEUM #2766 HIGH GLOSS WHITE ENAMEL OR APPROVED EQUAL.

ALL SHEET METAL PARTS SHALL BE .125 INCH THICK ALUMINUM.

ALL SEAMS SHALL BE CONTINUOUSLY WELDED.

ALUMINUM SHALL BE TYPE 5052-H32.

CONTINUOUS HINGE SHALL BE HEAVY GAUGE ALUMINUM WITH 1/4" DIAMETER STAINLESS STEEL HINGE PIN. HINGE IS SECURED WITH 1/4" X 20 TPI STAINLESS STEEL CARRIAGE BOLTS AND STAINLESS STEEL NYLOCK NUTS.

A SINGLE PHOTOCELL SHALL BE LOCATED ON THE NORTH-NORTHEAST SIDE OF THE CABINET UNLESS OTHERWISE CALLED FOR IN THE SPECIAL PROVISIONS. THE PHOTOCELL SHALL BE PLACED AS SHOWN AND SHALL BE AN APPROVED TYPE.

DOOR LATCH ASSEMBLY TO BE PROVIDED WITH THREE-POINT LOCKING MECHANISM.

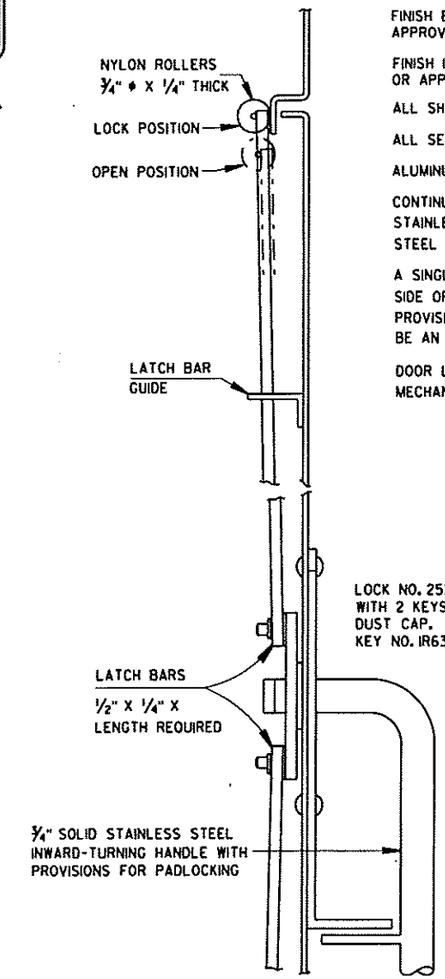

SIDE VIEW

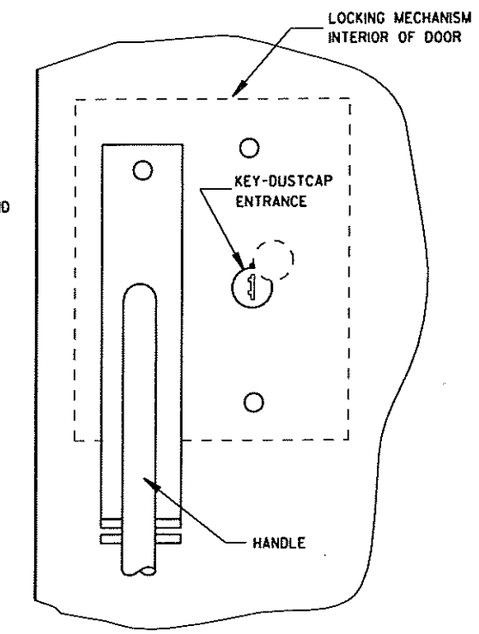

FRONT VIEW

LATCH ASSEMBLY

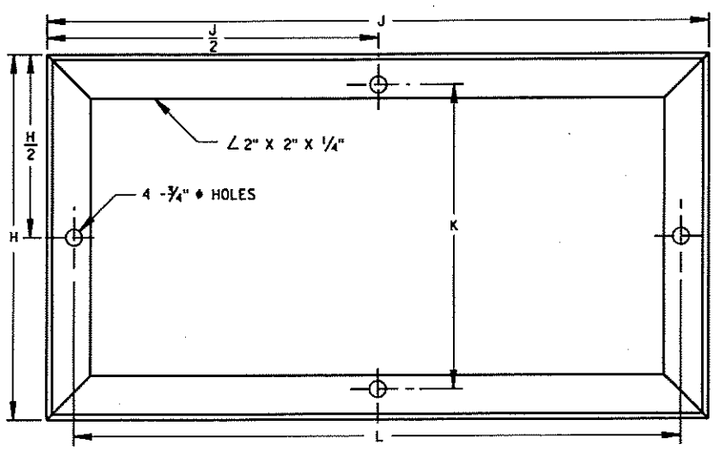

MOUNTING BASE

TABLE OF DIMENSIONS (INCHES)

MARK	CABINET TYPE		
	3060	3860	3866
A	30	38	38
B	60	60	66
C	16 1/2	16 1/2	24
D	26 1/2	34 3/4	33 3/4
E	38 3/4	38 3/4	38 3/4
F	26 1/2	34 3/4	33 3/4
G	19	19	25
H	16 1/2	16 1/2	24
H/2	8 1/4	8 1/4	12
J	30	38	38
J/2	15	19	19
K	13 3/4	13 3/4	21 1/4
L	27 1/2	35 1/2	35 1/2

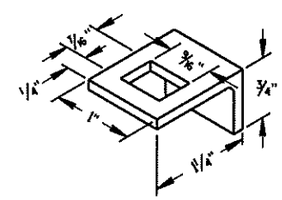

LATCH BAR GUIDE

SIGNAL OR LIGHTING CONTROL CABINET

STATE OF WISCONSIN
DEPARTMENT OF TRANSPORTATION

APPROVED
10/21/96
DATE
FHWA

STATE ELECTRICAL ENGINEER FOR HIGHWAYS

S.D.D. 9 D 2-2

S.D.D. 9 D 2-2

*RISE FOR 4' ARM SHALL BE 2'-0".

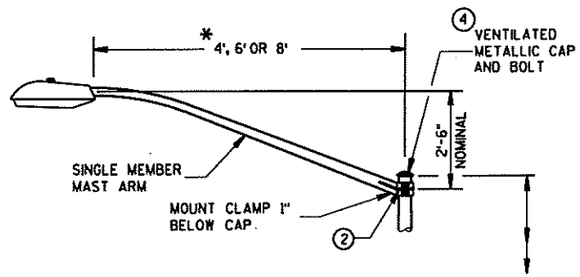

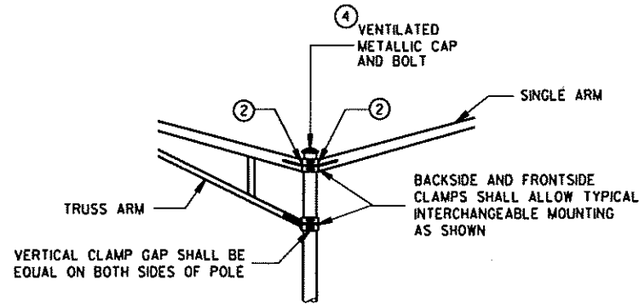

INTERCHANGEABLE MOUNTING DETAIL

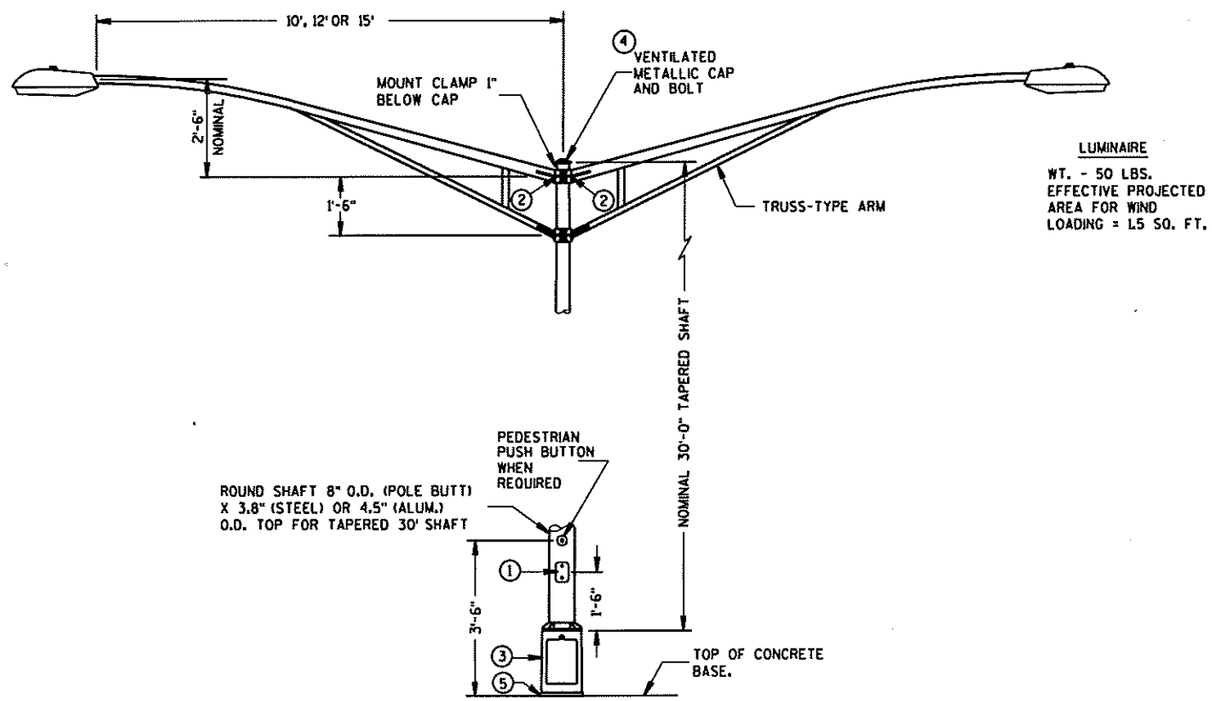

LUMINAIRE

WT. - 50 LBS.
EFFECTIVE PROJECTED
AREA FOR WIND
LOADING = 1.5 SQ. FT.

TYPE 5 POLE MOUNTING CONFIGURATION
(MAXIMUM LOAD)
LIGHTING ONLY

GENERAL NOTES

DETAILS OF CONSTRUCTION, MATERIALS AND WORKMANSHIP NOT SHOWN ON THIS DRAWING SHALL CONFORM TO THE PERTINENT REQUIREMENTS OF THE CONTRACT.

ALL TYPE 5 POLE MOUNTINGS SHALL BE DESIGNED TO INCLUDE TWIN 15' ARMS WITH LUMINAIRES.

POLES SHALL BE GALVANIZED STEEL OR ALUMINUM, AS CALLED FOR IN THE CONTRACT.

TYPE 5 ALUMINUM POLES SHALL BE CONSTRUCTED OF 6063-T6 ALUMINUM ALLOY. SLEEVING INSIDE THE POLE IS NOT ACCEPTABLE.

TYPE 5 STEEL POLES SHALL HAVE A MINIMUM WALL THICKNESS OF U.S. STANDARD 11 GAGE (.1196").

THE SLIPFITTER END OF THE LUMINAIRE MAST ARM SHALL BE A NOMINAL 2⅜ INCHES IN OUTSIDE DIAMETER. THE STRAIGHT PORTION OF THE SLIPFITTER END OF THE LUMINAIRE ARM SHALL BE A NOMINAL 12 INCHES IN LENGTH.

WHEN TRANSFORMER BASES ARE USED, WIRE CONNECTIONS SHALL BE MADE IN THE TRANSFORMER BASE.

1. 4" x 6" REINFORCED HANDHOLE & COVER ASSEMBLY WITH 2 (TWO) ¼" X ¾" - 20 TPI HEX HEAD STAINLESS STEEL BOLTS.
2. GROMMETS, 1" CHASE NIPPLES OR 1" CLOSE CONDUIT NIPPLES WITH BUSHINGS SHALL BE PROVIDED FOR 1⅜" HOLE IN POLE SHAFT FOR WIRING.
3. CAST ALUMINUM TRANSFORMER BASE, WHEN REQUIRED.
4. FURNISH AND INSTALL VENTILATED, CAST, METALLIC (ALUMINUM ALLOY) CAPS. FASTEN CAPS WITH ONE (1) ¼" X ¾" - 20 TPI STAINLESS STEEL, HEX HEAD BOLT.
5. SHIMMING, IF NEEDED, SHALL BE LOCATED BETWEEN THE CONCRETE FOUNDATION AND THE TRANSFORMER BASE.

POLE MOUNTINGS FOR
LIGHTING UNITS, TYPE 5
(30 FEET)

STATE OF WISCONSIN
DEPARTMENT OF TRANSPORTATION

6
S.D.D. 9 E 1-5d

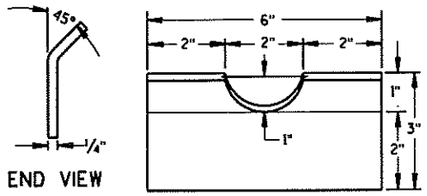

FRONT VIEW

RECTANGULAR CLAMP SHIM

(4 TO A SET)

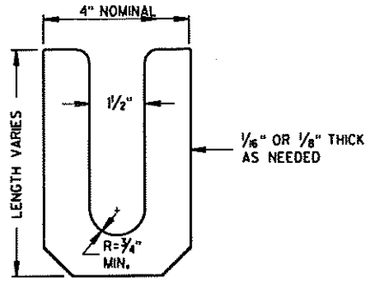

LEVELING SHIM (15)

SHALL BE ALUMINUM

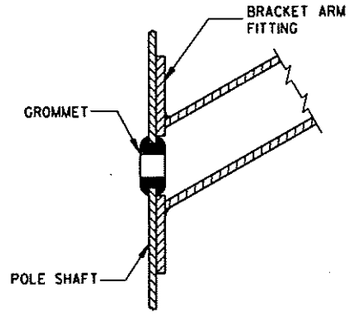

TYPICAL APPLICATION OF GROMMET IN POLE SHAFT

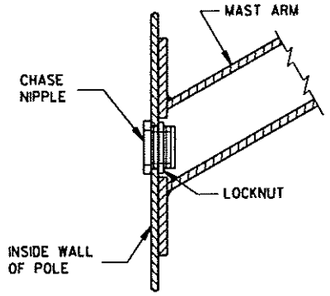

TYPICAL APPLICATION OF CHASE NIPPLE IN POLE SHAFT

GENERAL NOTES

CLAMP BOLT-NUT TIGHTENING TORQUE SHALL BE INDICATED BY INDENT STAMPING (1/2 INCH NUMERALS AND LETTERS) OR WEATHERPROOF PRINTING ON THE INSIDE OF THE CLAMP THAT IS WELDED TO THE ARM MEMBER.

(10) 4.5" I.D. FOR LUMINAIRE MAST ARM CLAMP.
6.625" I.D. FOR TROMBONE MAST ARM CLAMP.

(11) INDIVIDUAL BASE PLATE ANCHOR ROD COVERS. (4 REQUIRED)

(12) BASE PLATE SLOTTED TO ACCEPT 11" THROUGH 12" BOLT CIRCLE USING 1" DIAMETER ANCHOR RODS.

(13) OUTSIDE SHIM DIAMETER - (4.5" O.D. FOR LUMINAIRE MAST ARM)
(6.625" O.D. FOR TROMBONE MAST ARM)

(14) VARIABLE SHIM THICKNESS - (0.10", 0.25", 0.35", 0.53" OR 0.70")

SHIM THICKNESS FOR TROMBONE MAST ARMS MAY BE TYPICALLY 0.25", 0.35", 0.53" OR 0.70".

SHIM THICKNESS FOR LUMINAIRE MAST ARMS MAY BE TYPICALLY 0.10", 0.25" OR 0.35".

SHIM MATERIAL SHALL BE ALUMINUM ALLOY.

SHIM THICKNESS SHALL BE IMPRESSED INTO EACH SHIM. NUMERALS SHALL BE 1/4" HIGH AND LEGIBLE.

THE CONTRACTOR SHALL SUBMIT TWO COPIES OF ALL SHIM SHOP DRAWINGS TO THE ENGINEER FOR APPROVAL.

(15) LEVELING SHIMS, DESIGNED FOR THE PURPOSE, SHALL BE USED WHEN PLUMBING POLES. THE USE OF WASHERS IN LIEU OF PROPER LEVELING SHIMS IS NOT ACCEPTABLE. LEVELING SHIMS SHALL BE USED ONLY BETWEEN THE TOP OF THE CONCRETE BASE AND A METALLIC BASE PLATE.

SHIMS SHALL BE LONG ENOUGH AND WIDE ENOUGH TO COMPLETELY COVER THE AREA UNDER THE LENGTH AND WIDTH OF THE BASE MOUNTING FLANGE.

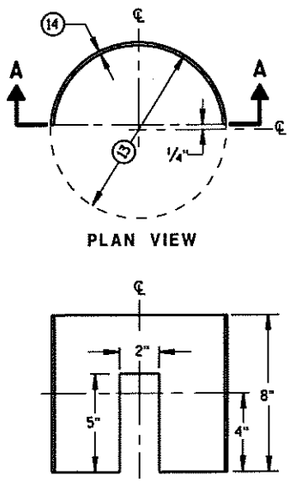

SECTION A-A

CIRCULAR CLAMP SHIM

(2 TO A SET)

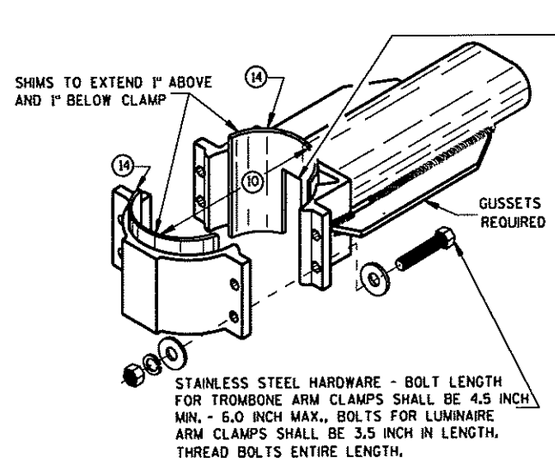

TYPICAL TROMBONE MAST ARM AND SINGLE LUMINAIRE MAST ARM MOUNTING CLAMP

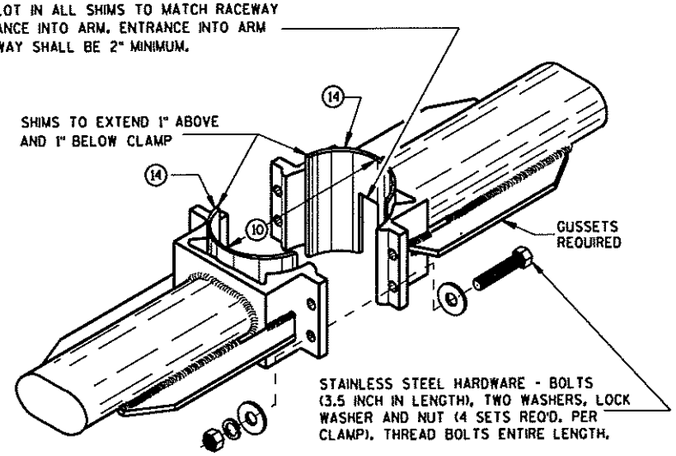

TYPICAL LUMINAIRE MAST ARM (DOUBLE) MOUNTING BRACKETS

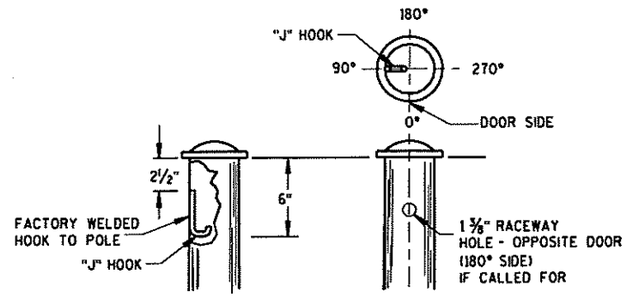

TYPICAL "J" HOOK LOCATION

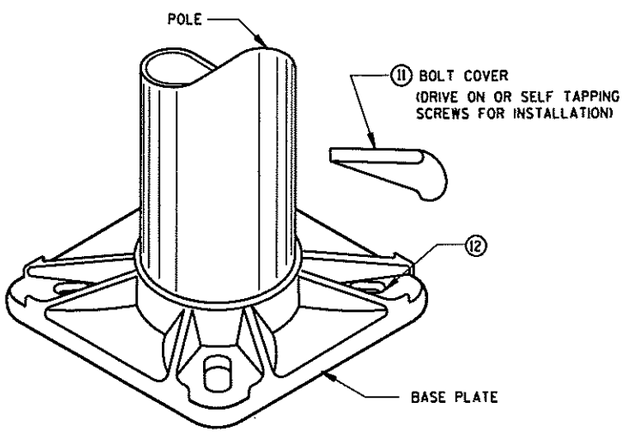

BASE PLATE

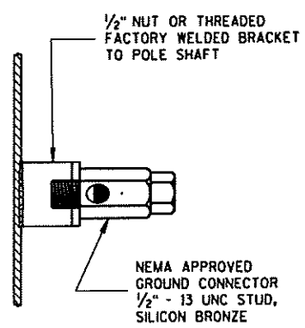

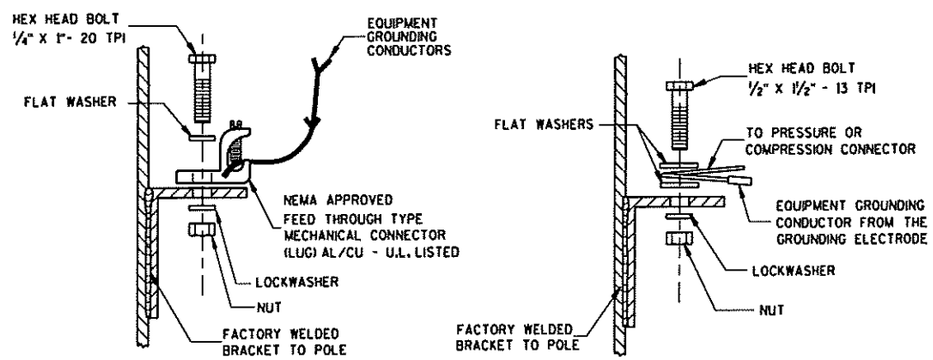

TYPICAL GROUNDING CONNECTIONS

NUT, BOLT AND WASHERS SHALL BE STAINLESS STEEL

HARDWARE DETAILS FOR POLE MOUNTINGS

STATE OF WISCONSIN
DEPARTMENT OF TRANSPORTATION

APPROVED
3/5/01
DATE
FHWA

STATE ELECTRICAL ENGINEER FOR HIGHWAYS

S.D.D. 9 E 1-4g

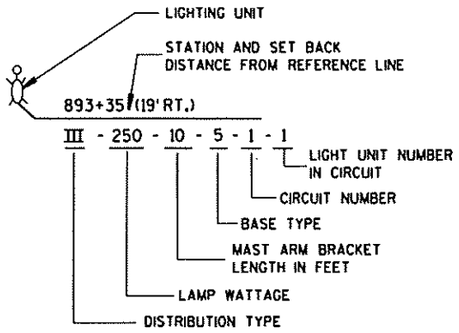

LIGHTING UNIT CODE
(TYPICAL)

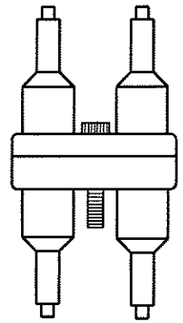

DETAIL "A"
DOUBLE POLE

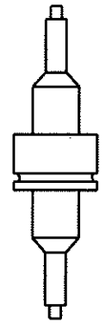

DETAIL "B"
SINGLE POLE

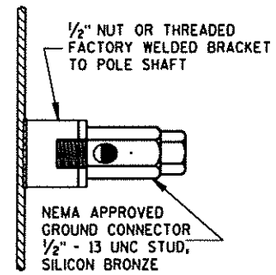

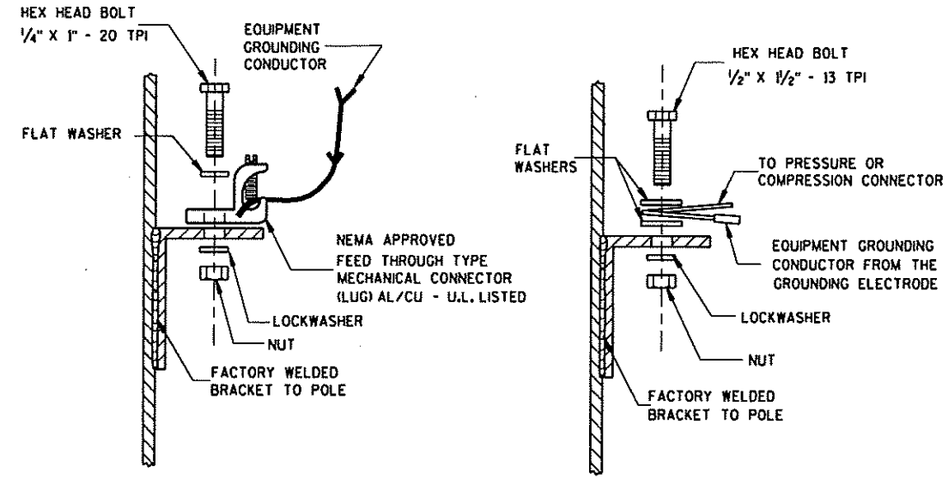

TYPICAL GROUNDING CONNECTIONS
NUT, BOLT, WASHERS AND LOCKWASHERS SHALL BE STAINLESS STEEL

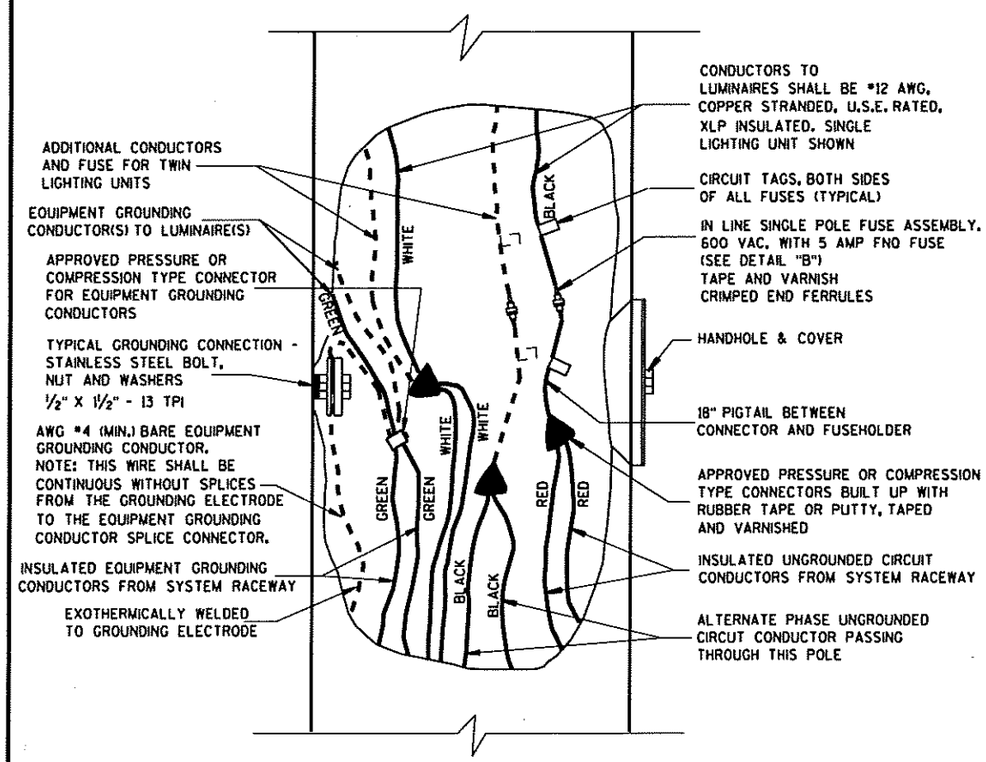

3 WIRE - 120, 240 OR 480 VAC (UNGROUNDED CONDUCTOR) WITH GROUNDED CONDUCTOR AND WITH EQUIPMENT GROUNDING CONDUCTOR

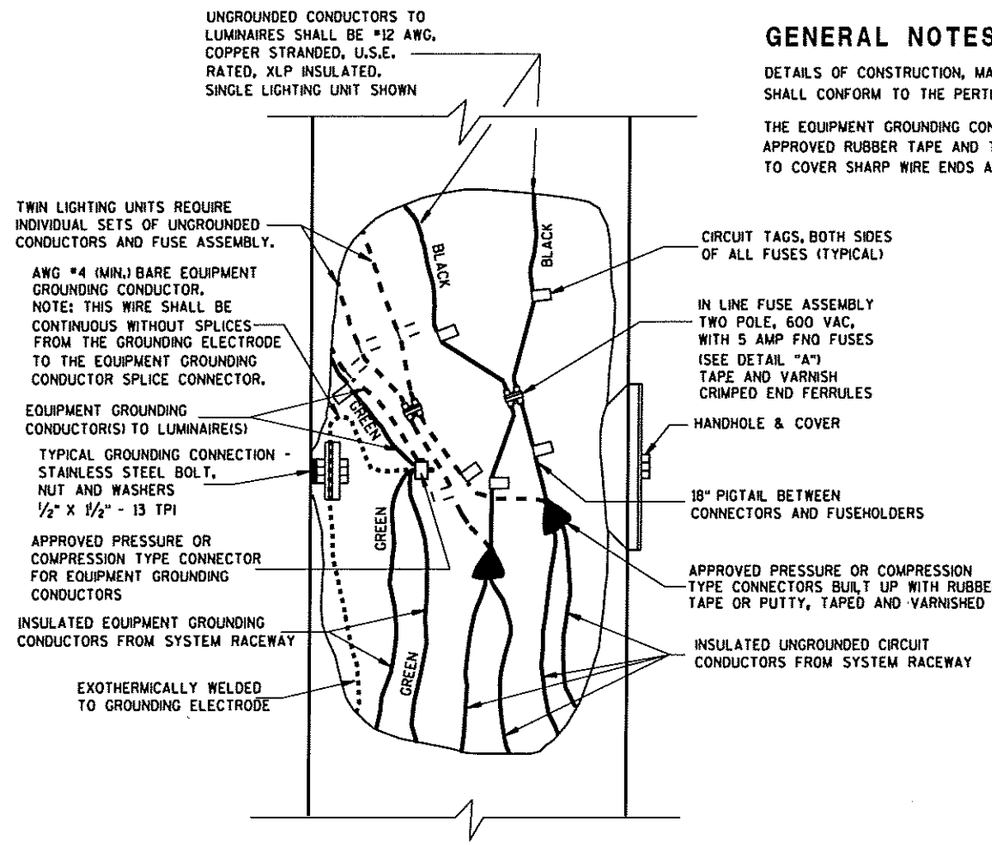

2 WIRE - 240 OR 480 VAC (UNGROUNDED CONDUCTORS) WITH EQUIPMENT GROUNDING CONDUCTOR

GENERAL NOTES

DETAILS OF CONSTRUCTION, MATERIALS AND WORKMANSHIP NOT SHOWN ON THIS DRAWING SHALL CONFORM TO THE PERTINENT REQUIREMENTS OF THE CONTRACT.

THE EQUIPMENT GROUNDING CONNECTOR SHALL BE TAPED WITH 3 WRAPS (MINIMUM) OF APPROVED RUBBER TAPE AND THEN 3 WRAPS (MINIMUM) OF APPROVED VINYL TAPE TO COVER SHARP WIRE ENDS AFTER THE CONNECTION IS COMPLETED.

NON-FREEWAY LIGHTING UNIT POLE WIRING

STATE OF WISCONSIN
DEPARTMENT OF TRANSPORTATION

APPROVED
10/21/96
DATE
STATE ELECTRICAL ENGINEER FOR HIGHWAYS
FHWA

S.D.D. 9 E 3-2

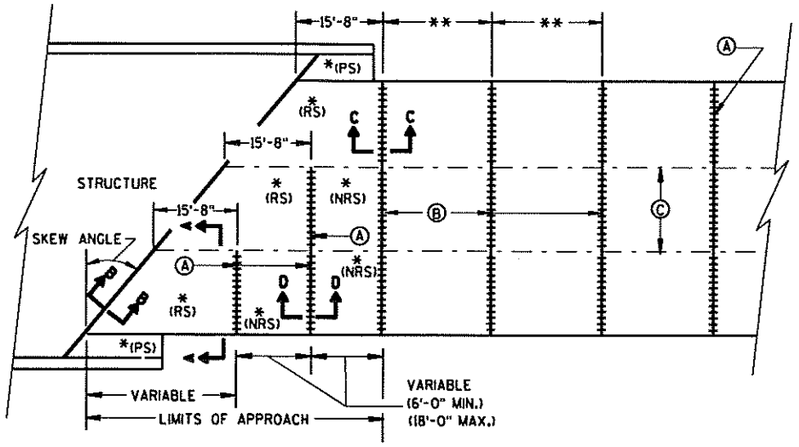

SKEWED PAVEMENT
MORE THAN 2 LANES

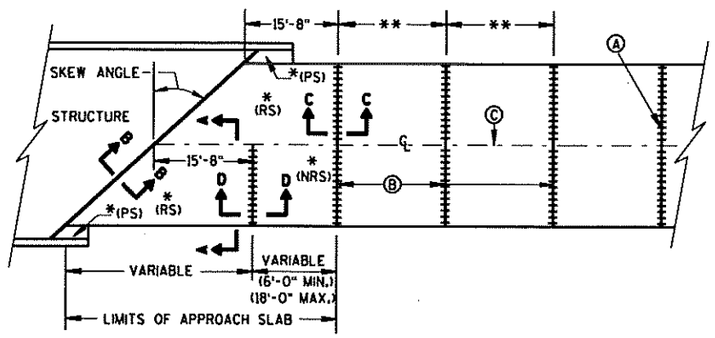

SKEWS >30°
(PAVEMENT WIDTH ≤30')

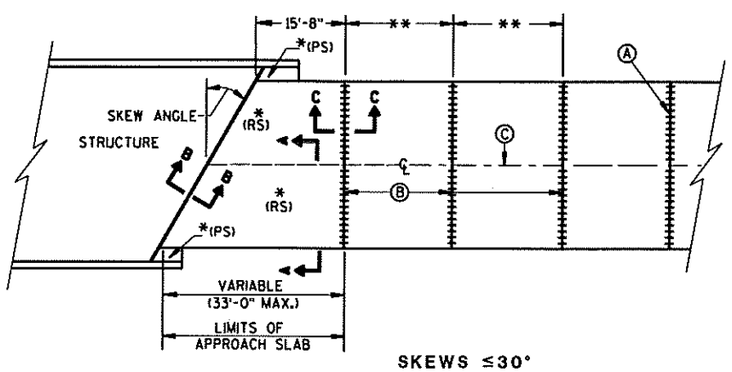

SKEWS ≤30°
(PAVEMENT WIDTH ≤30')

APPROACH SLAB AND ADJACENT PAVEMENT

*(RS) = REINFORCED CONCRETE SLAB
*(PS) = PAVED CONCRETE SHOULDER: CONCRETE PAVEMENT, OR CONCRETE SURFACE DRAIN (SEE DETAILS ELSEWHERE IN THE PLAN)
*(NRS) = NON-REINFORCED CONCRETE SLAB

**STANDARD TRANSVERSE JOINT SPACING (SEE SDD 13C11 & SDD 13C12)

Ⓐ STANDARD CONTRACTION JOINT NORMAL OR SKEWED TO ℄ OR ℄
Ⓑ 1½" EXPANSION JOINT WITH DOWEL BARS NORMAL OR SKEWED TO ℄ OR ℄
Ⓒ STANDARD LONGITUDINAL JOINT AND TIE BARS.

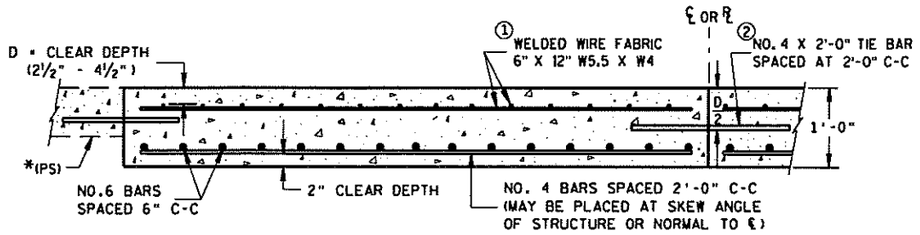

SECTION A-A
REINFORCEMENT POSITIONING DETAIL

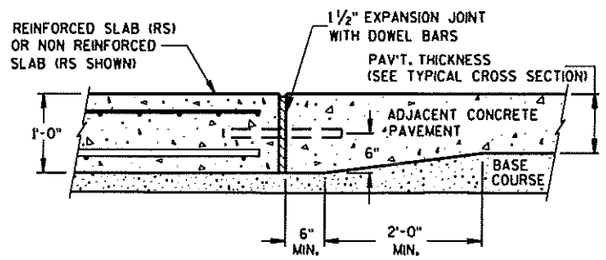

SECTION C-C
TRANSITION DETAIL
APPROACH SLAB TO ADJACENT PAVEMENT

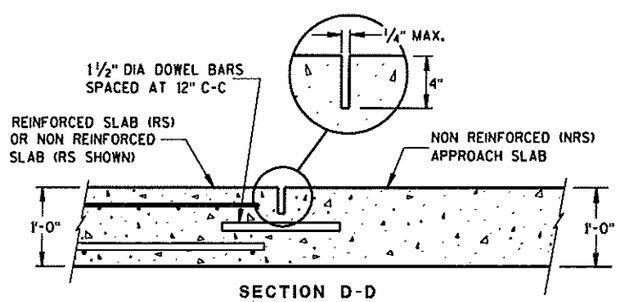

SECTION D-D
CONTRACTION JOINT

GENERAL NOTES

DETAILS OF CONSTRUCTION NOT SHOWN ON THIS DRAWING SHALL CONFORM TO THE STANDARD SPECIFICATIONS AND SPECIAL PROVISIONS.

DOWEL BARS ARE NOT REQUIRED WHEN THE APPROACH SLAB ABUTS AN ASPHALT PAVEMENT OVER BASE COURSE.

SPLICING OF NO. 6 BARS IN THE APPROACH SLAB IS PERMITTED FOR SKEWED STRUCTURES ONLY. SPLICES SHALL BE STAGGERED, WITH A MAXIMUM OF ONE SPLICE PER BAR. THE LENGTH OF LAP SHALL BE 20 INCHS.

① NO. 4 BARS SPACED AT 2'-0" C-C IN BOTH THE LONGITUDINAL AND TRANSVERSE DIRECTIONS MAY BE USED FOR TOP REINFORCEMENT AS AN ALTERNATIVE TO THE WELDED WIRE FABRIC.

② TIE BARS BETWEEN REINFORCED SLABS MAY BE OMITTED WHERE SLAB REINFORCEMENT EXTEND ACCROSS THE CENTERLINE OR REFERENCE LINE.

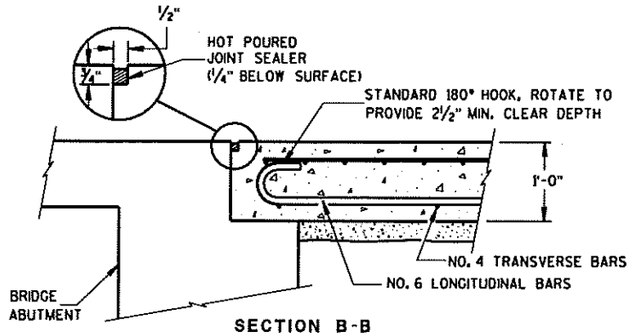

SECTION B-B
BEND DETAIL
BOTTOM REINFORCEMENT

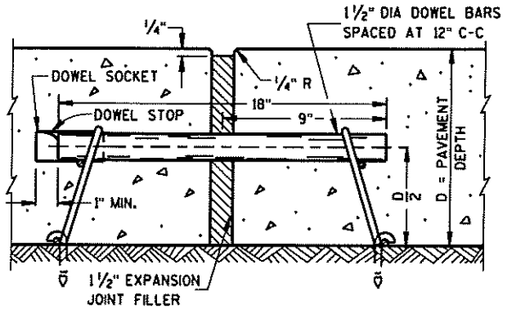

EXPANSION JOINT

CONCRETE PAVEMENT
APPROACH SLAB

STATE OF WISCONSIN
DEPARTMENT OF TRANSPORTATION

APPROVED
10/14/99
DATE
CHIEF PAVEMENTS & RESEARCH ENGINEER
FHWA

S.D.D. 13 B 2-4

S.D.D. 13 B 2-4

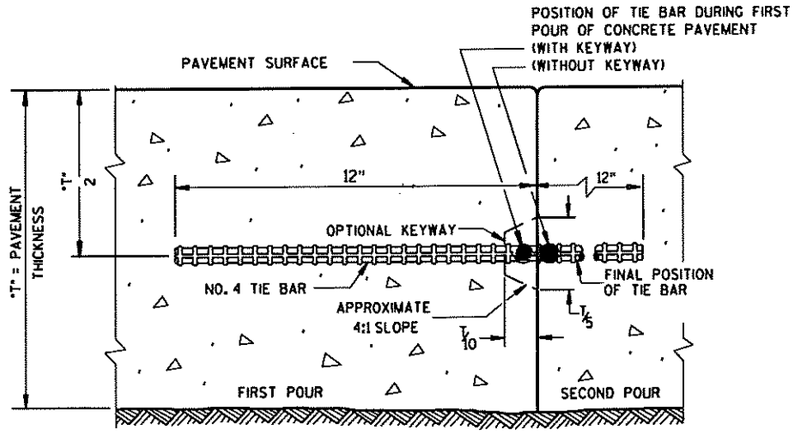

CONSTRUCTION JOINT

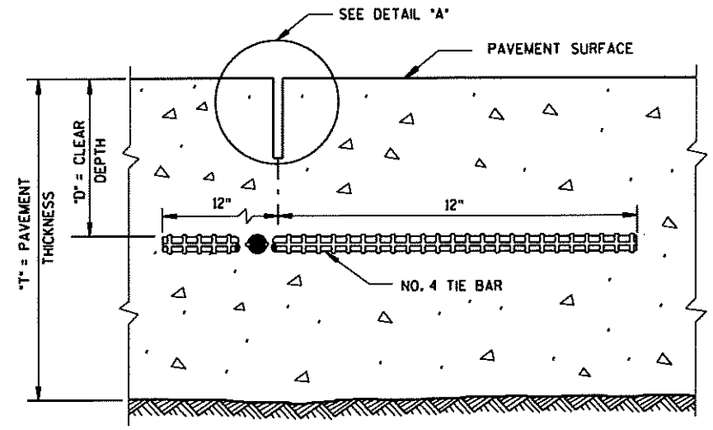

SAWED JOINT

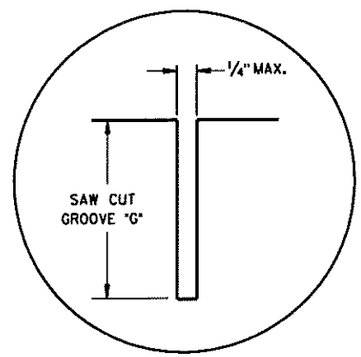

DETAIL "A"

GENERAL NOTES

DETAILS OF CONSTRUCTION NOT SHOWN ON THIS DRAWING SHALL CONFORM TO THE PERTINENT REQUIREMENTS OF THE STANDARD SPECIFICATIONS AND THE APPLICABLE SPECIAL PROVISIONS.

LONGITUDINAL JOINTS SHALL NOT BE SEALED OR FILLED.

TIE BAR SPACINGS ARE VALID ONLY FOR PAVEMENT WIDTHS IN THE TABLE. FOR WIDER PAVEMENTS, TIED CONCRETE SHOULDERS OR RAMPS, THE TIE BAR SPACING SHALL BE AS SHOWN ON THE PLANS.

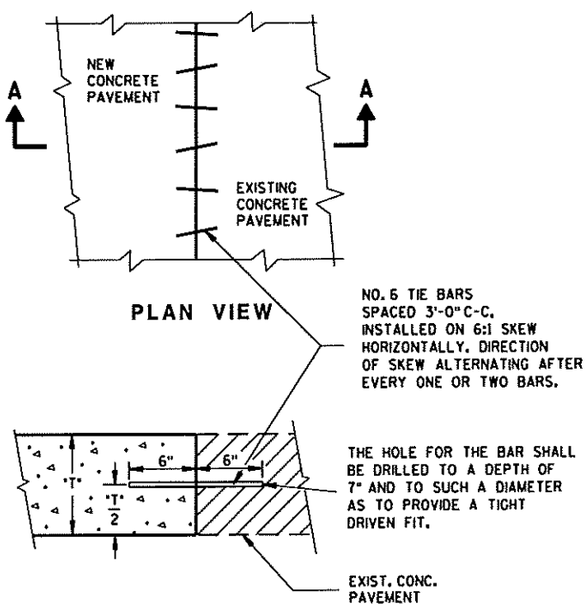

PLAN VIEW

SECTION A-A

PAVEMENT TIES

PAVEMENT THICKNESS "T"	CLEAR DEPTH "D"	SAW CUT GROOVE "G"	MAXIMUM TIE BAR SPACING "S" PAVEMENT WIDTH 24' OR 26'	30'
6, 6 1/2"	3"±1/2"	2"	48"	42"
7, 7 1/2"	3 1/4"±1"	2 1/4"	45"	36"
8, 8 1/2"	3 3/4"±1"	2 1/2"	39"	30"
9, 9 1/2"	4 1/4"±1"	3"	33"	27"
10, 10 1/2"	4 3/4"±1"	3 1/4"	30"	24"
11, 11 1/2"	5 1/4"±1"	3 3/4"	27"	21"
12"	5 3/4"±1"	4	24"	21"

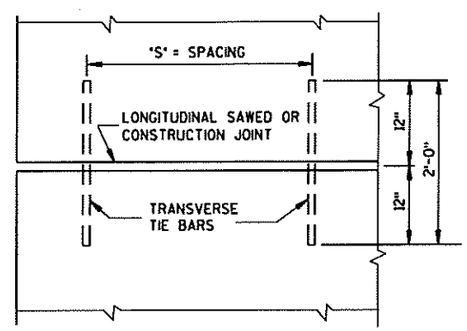

PLAN VIEW
SHOWING LOCATION OF TIE BARS

CONCRETE PAVEMENT
LONGITUDINAL JOINTS
AND PAVEMENT TIES

STATE OF WISCONSIN
DEPARTMENT OF TRANSPORTATION

APPROVED
6/06/02 — DATE
Bill Duckett — PAVEMENT ENGINEER
FHWA

S.D.D. 13 C 1-11

S.D.D. 13 C 1-11

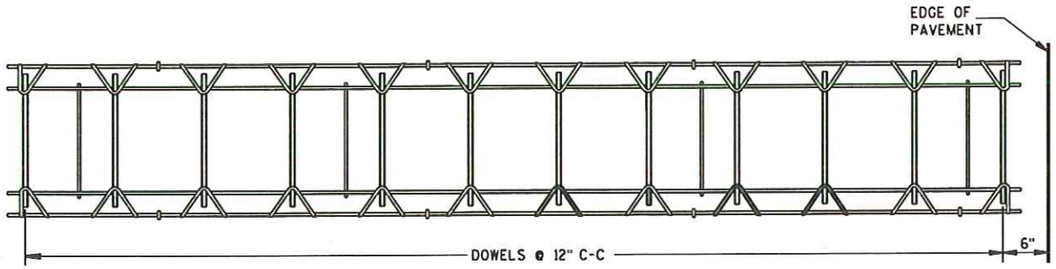

PLAN VIEW

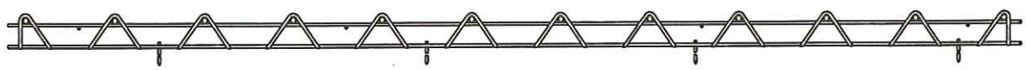

SIDE VIEW

CONTRACTION JOINT DOWEL ASSEMBLY ①

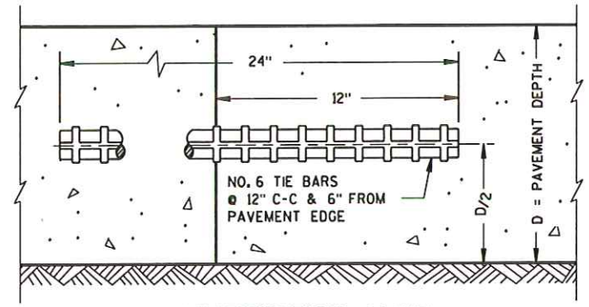

CONSTRUCTION JOINT

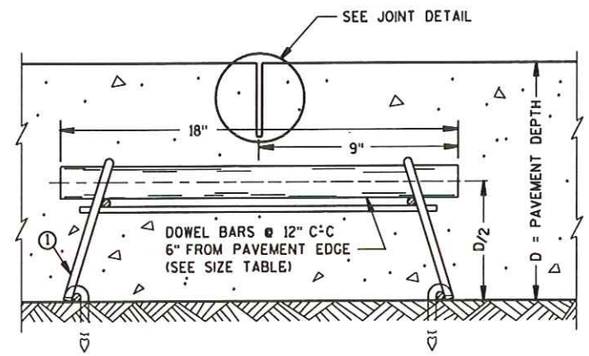

DOWELED CONTRACTION JOINT

GENERAL NOTES

DETAILS OF CONSTRUCTION NOT SHOWN ON THIS DRAWING SHALL CONFORM TO THE STANDARD SPECIFICATIONS AND SPECIAL PROVISIONS.

CONTRACTION JOINTS

CONTRACTION JOINTS SHALL BE NORMAL TO THE CENTERLINE. THE LOCATION OF CONTRACTION JOINTS THROUGH INTERSECTIONS SHALL BE SHOWN ON THE PLANS OR AS DIRECTED BY THE ENGINEER.

CONTRACTION JOINTS SHALL NOT BE SEALED OR FILLED.

DOWEL BARS SHALL BE INSTALLED PARALLEL TO THE PAVEMENT CENTERLINE AND SURFACE.

CONSTRUCTION JOINTS

CONSTRUCTION JOINTS SHALL BE A MINIMUM OF 4 FEET FROM THE NEAREST CONTRACTION JOINT AND ALIGNED EITHER PARALLEL TO CONTRACTION JOINTS OR AT 90° TO THE CENTERLINE.

TIE BARS MAY BE INSERTED THROUGH THE HEADER BOARD AFTER THE CONCRETE HAS BEEN PLACED.

① ALTERNATIVE DESIGNS OF THE DOWEL ASSEMBLY MAY BE USED WHEN APPROVED BY THE ENGINEER. MECHANICAL DOWEL BAR IMPLANTERS MAY BE USED INSTEAD OF DOWEL ASSEMBLIES.

② DOWEL BARS SHALL BE ANCHORED INTO DRILL HOLES WITH AN APPROVED EPOXY GROUT.

③ THE FREE END OF DOWEL BARS SHALL RECEIVE A THIN UNIFORM COATING OF BOND BREAKING GREASE.

④ DOWEL BARS INSTALLED BY DRILLING SHALL BE SPACED 1'-3" ON CENTER. THE GROUPING OF DOWEL BARS SHALL BE CENTERED INSIDE THE SLAB BASED ON ALL THE FOLLOWING SITUATIONS:

BETWEEN THE EDGES OF PAVEMENTS WITHOUT LONGITUDINAL JOINTS OR BETWEEN THE EDGE OF PAVEMENT AND NEAREST LONGITUDINAL JOINT OR BETWEEN TWO ADJACENT LONGITUDINAL JOINTS.

THE CLEAR DISTANCE FROM THE EDGE OF PAVEMENT OR LONGITUDINAL JOINT TO THE NEAR EDGE OF DOWEL BAR NEAREST THAT EDGE OR JOINT SHALL BE A MINIMUM OF 6 INCHES AND A MAXIMUM OF 14 INCHES.

PAVEMENT DEPTH, DOWEL BAR SIZE AND JOINT SPACING TABLE

PAVEMENT DEPTH (D)	DOWEL BAR DIAMETER	CONTRACTION JOINT SPACING
6", 6 1/2"	1 1/4"	12'
7", 7 1/2"	1 1/4"	14'
8", 8 1/2"	1 1/4"	15'
9", 9 1/2"	1 1/4"	15'
10" & ABOVE	1 1/2"	18'

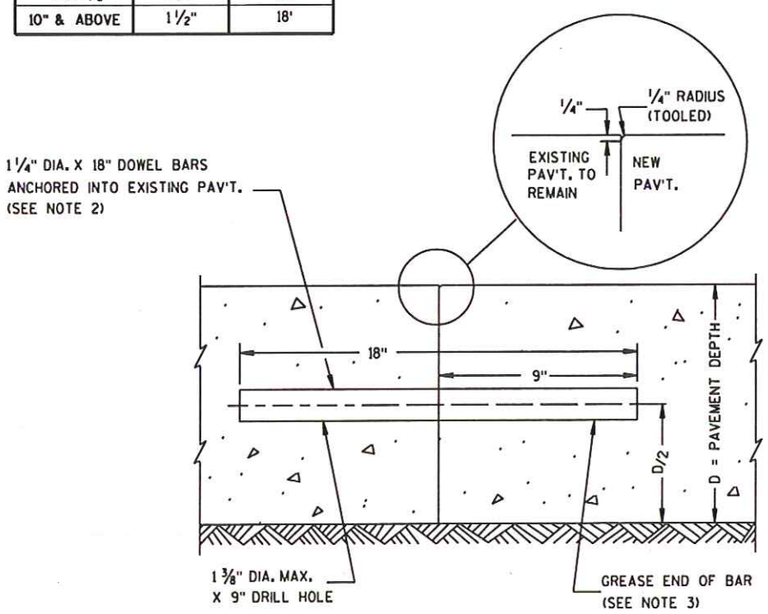

TRANSVERSE CONTRACTION JOINTS ABUTTING EXISTING PAVEMENT

④ DOWEL BAR DETAIL

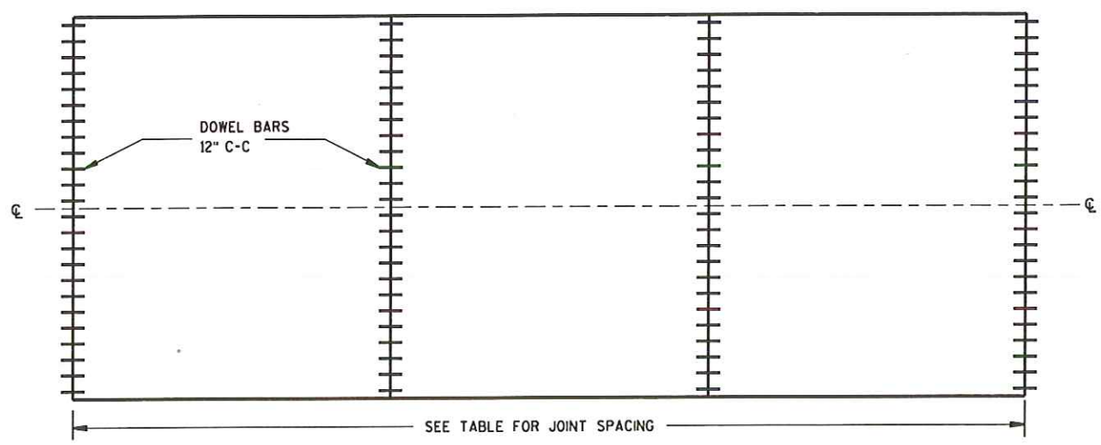

CONTRACTION JOINT LOCATIONS

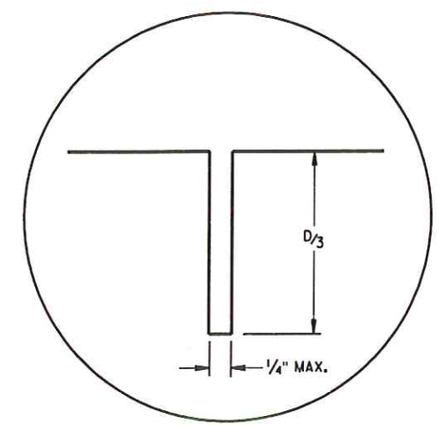

JOINT DETAIL

URBAN DOWELED CONCRETE PAVEMENT

STATE OF WISCONSIN
DEPARTMENT OF TRANSPORTATION

APPROVED
6/6/02 — DATE
Bill Ducket — PAVEMENT ENGINEER
FHWA

S.D.D. 13 C 13-4

S.D.D. 13 C 13-4

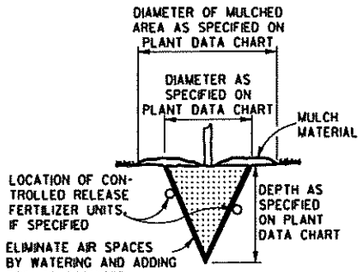

MACHINE MOVED

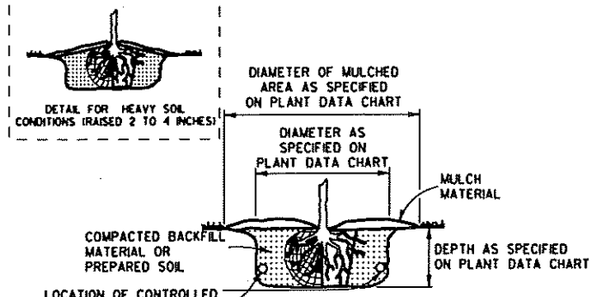

BALLED AND BURLAPPED, BARE ROOT, POTTED OR CONTAINER GROWN

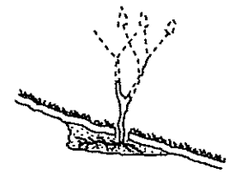

ACCOMMODATE ROOTS (SMOOTH AND STAGHORN SUMAC)

NOTE:
1) ENGINEER SHALL REQUIRE 3 SLITS IN POT TO SPEED DETERIORATION
2) METAL, PLASTIC OR OTHER NONDEGRADABLE POTS SHALL BE REMOVED PRIOR TO PLANTING

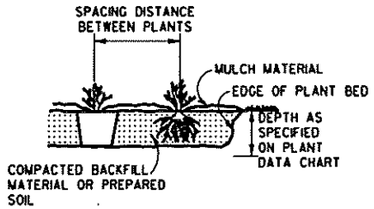

PREPARED BED (BARE ROOT AND POTTED)

PLANTING

TOP VIEW

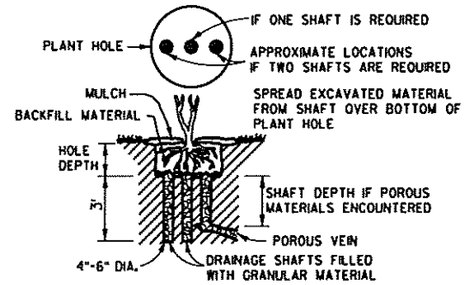

NOTE:
DRAINAGE SHAFT AS SPECIFIED ON PLANT DATA CHART

DRAINING

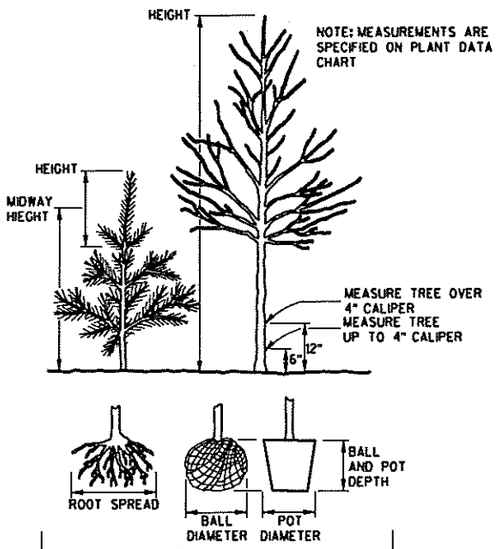

MEASURING

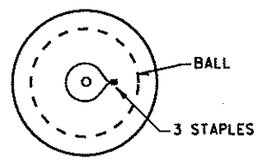

TOP VIEW

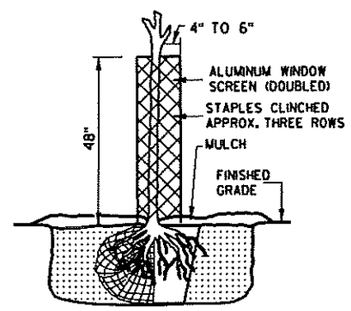

RODENT PROTECTION

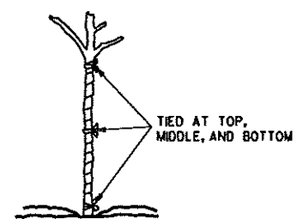

WRAPPING

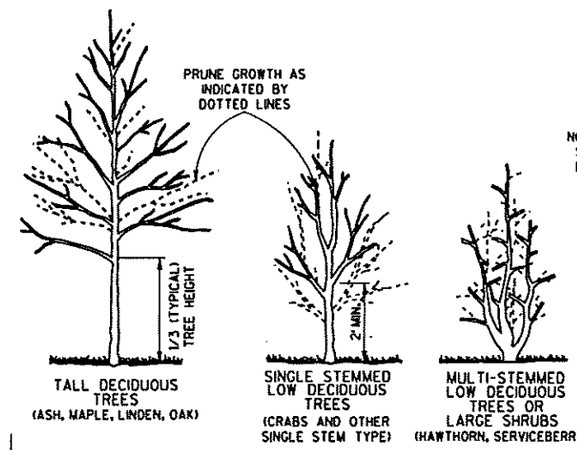

TALL DECIDUOUS TREES (ASH, MAPLE, LINDEN, OAK)

SINGLE STEMMED LOW DECIDUOUS TREES (CRABS AND OTHER SINGLE STEM TYPE)

MULTI-STEMMED LOW DECIDUOUS TREES OR LARGE SHRUBS (HAWTHORN, SERVICEBERRY)

NOTE: WHEN PRUNING, PRESERVE CHARACTER AND SHAPE OF TREE. AVOID LEAVING STUBS - REMOVE BRANCH OR TWIG BACK TO THE NEAREST CROTCH
1) PRUNE TO REMOVE DEAD AND BROKEN BRANCHES
2) PRUNE TO REMOVE BRANCHES THAT TOUCH OR ARE TOO CLOSE TO OTHER BRANCHES

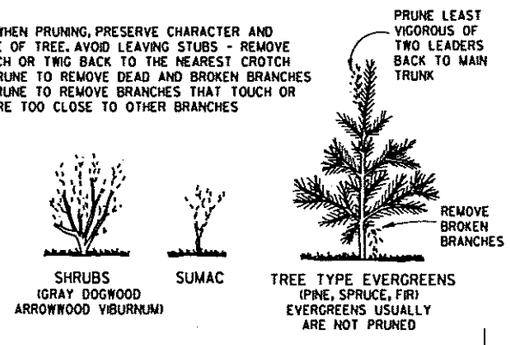

SHRUBS (GRAY DOGWOOD ARROWWOOD VIBURNUM)

SUMAC

TREE TYPE EVERGREENS (PINE, SPRUCE, FIR) EVERGREENS USUALLY ARE NOT PRUNED

PRUNING

TOP VIEW

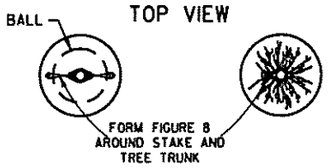

TOP VIEW

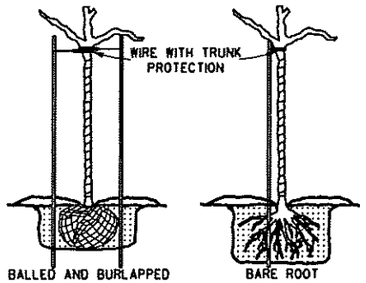

BALLED AND BURLAPPED DECIDUOUS TREES

BARE ROOT

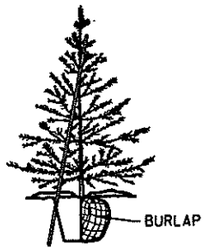

EVERGREENS

NOTE: BRACING STAKE
1) SHALL BE DRIVEN INTO THE GROUND AS CLOSE TO THE TREE AS POSSIBLE WITHOUT DAMAGING THE BRANCHES.
2) MAY BE DRIVEN AT SUCH AN ANGLE THAT IT DOES NOT PENETRATE THE BALL OR POT.
3) SHALL NOT PROTRUDE ABOVE THE TOP OF THE TREE; AND
4) SHALL HAVE A HOLE NEAR THE TOP TO HOLD THE WIRE IN PLACE.

BRACING

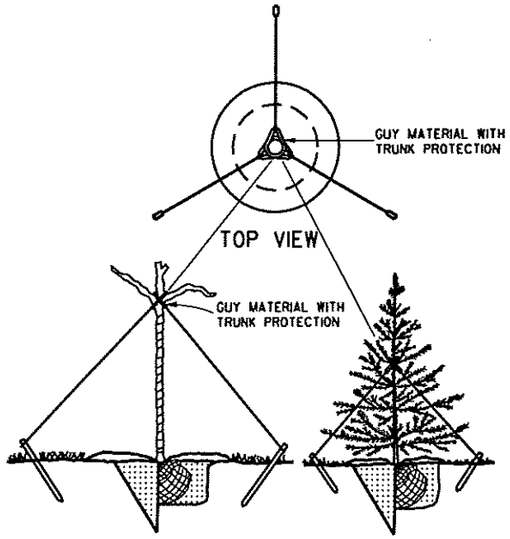

DECIDUOUS TREES

EVERGREENS

GUYING

PRUNE LARGER SHRUBS BY REMOVING FROM ONE-THIRD TO ONE-HALF TOP GROWTH AS INDICATED BY DOTTED LINE

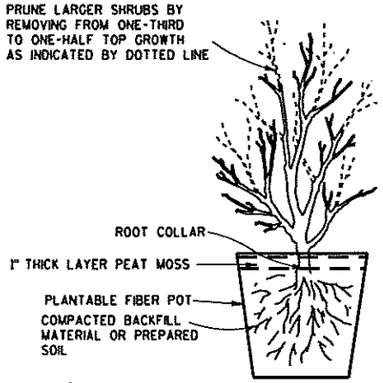

POTTING

NOTES

DETAILS OF CONSTRUCTION NOT SHOWN ON THIS DRAWING SHALL CONFORM TO THE PERTINENT REQUIREMENTS OF THE STANDARD SPECIFICATIONS AND THE APPLICABLE SPECIAL PROVISIONS.

BRACING, WRAPPING, GUYING, RODENT PROTECTION, FERTILIZER AND MULCH SHALL BE USED ONLY WHEN SPECIFIED ON THE PLANT DATA CHART (PART OF PLAN) OR SPECIAL PROVISIONS.

TREE PLANTING DETAIL

STATE OF WISCONSIN
DEPARTMENT OF TRANSPORTATION

APPROVED
4/11/94
DATE
Roy D. Thiesenhusen
CHIEF METHODS DEVELOPMENT ENGINEER
FHWA

S.D.D. 14 A 2-1

S.D.D. 14 A 2-1

GENERAL NOTES

DETAILS OF CONSTRUCTION, MATERIALS AND WORKMANSHIP NOT SHOWN ON THIS DRAWING SHALL CONFORM TO THE PERTINENT REQUIREMENTS OF THE STANDARD SPECIFICATIONS, AND THE APPLICABLE SPECIAL PROVISIONS.

(1) W6 X 9 OR W6 X 8.5 STEEL POSTS AND NOTCHED PLASTIC BLOCKOUTS ARE ACCEPTABLE ALTERNATIVES FOR 6" X 8" WOOD POSTS WITH WOOD OR PLASTIC BLOCKOUTS. USE APPROVED NOTCHED PLASTIC BLOCKOUTS WITH STEEL POSTS.

DO NOT MIX STEEL POSTS AND WOOD POSTS IN A SINGLE INSTALLATION.

(2) USE STRUCTURAL STEEL POSTS CONFORMING TO AASHTO M183. GALVANIZE ACCORDING TO AASHTO M 111. EITHER SET THE POSTS IN DRILLED HOLES OR DRIVE TO GRADE. REMOVE MUSHROOMING CAUSED BY DRIVING AND REPAIR DAMAGED SPELTER COATING ON GALVANIZED POSTS.

(3) INSTALL STEEL POSTS WITH HOLES ON APPROACHING TRAFFIC SIDE.

(4) USE EITHER WOOD OR APPROVED PLASTIC BLOCKOUTS ON WOOD POSTS.

(5) WHEN SPECIFIED IN THE PLANS, THE 2-FOOT MINIMUM TO HINGE POINT MAY BE REDUCED OR ELIMINATED IF EXISTING CONDITIONS DO NOT PERMIT THE DESIRABLE EARTHWORK.

INCREASE POST LENGTH TO PROVIDE A MINIMUM EMBEDMENT OF 3'-6" IF THE SHOULDER HINGE POINT IS LOCATED IN FRONT OF THE POST.

(6) IF ROCK IS ENCOUNTERED DURING EXCAVATION, THE ENGINEER MAY APPROVE USING A 12 INCH DIAMETER POST HOLE EXTENDING 20 INCHES DEEP INTO THE ROCK. PLACE GRANULAR MATERIAL IN THE BOTTOM OF THE HOLE APPROXIMATELY 2½ INCHES DEEP. CUT THE POSTS TO LENGTH AND PLACE IN YHE HOLE. BACKFILL WITH MATERIAL EXCAVATED FROM THE HOLE AND COMPACT ADEQUATEY.

INSTALL BEAM GUARD SECTIONS AND ALL NECESSARY HARDWARE ACCORDING TO THE APPLICABLE PLAN AND CURRENT STANDARD AND SUPPLEMENTAL SPECIFICATIONS.

ALL DIMENSIONS ARE SUBJECT TO MANUFACTURER'S TOLERANCES EXCEPT WHERE ALLOWABLE TOLERANCES ARE SHOWN.

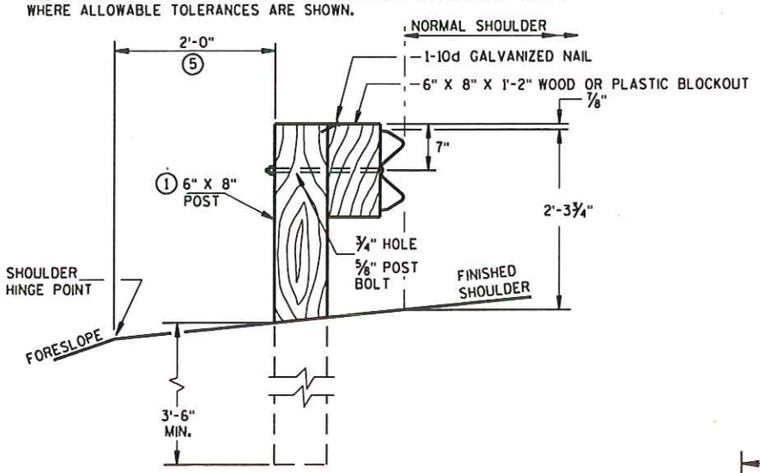

END VIEW
LOCATED ALONG A ROADWAY SHOULDER

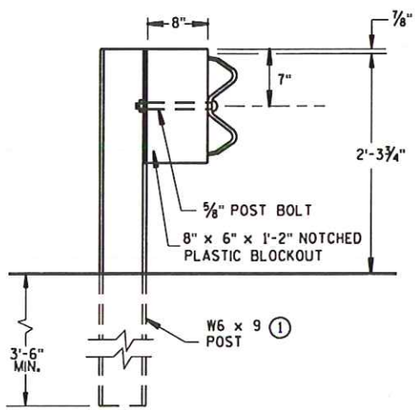

END VIEW
STEEL POST & NOTCHED PLASTIC BLOCKOUT ALTERNATIVE

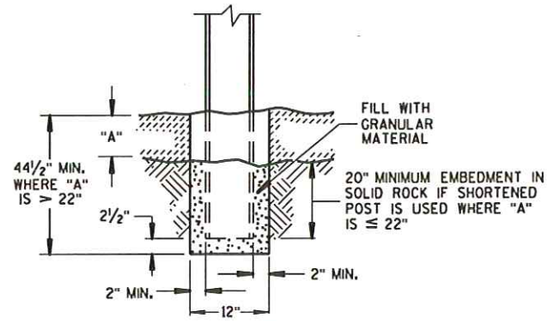

END VIEW
SETTING STEEL OR WOOD POST IN ROCK (6)

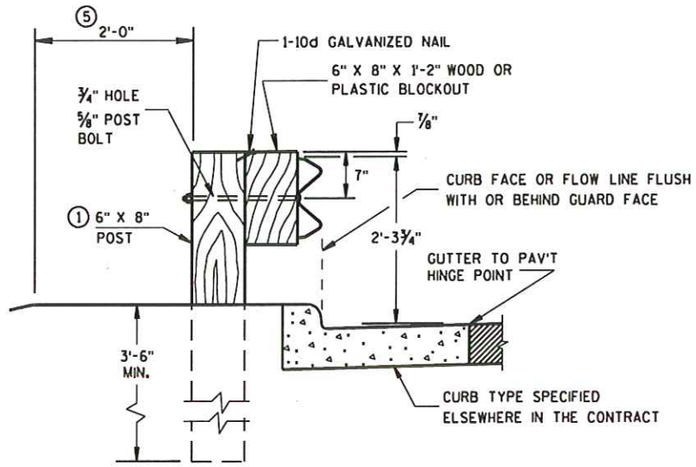

END VIEW
LOCATED ALONG A CURBED ROADWAY

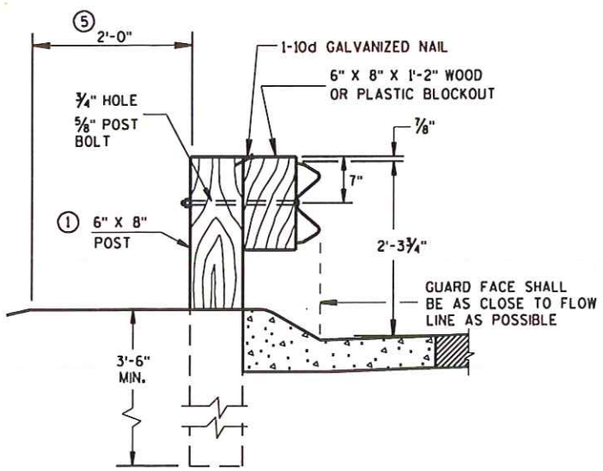

END VIEW
LOCATED ALONG A MOUNTABLE CURBED ROADWAY

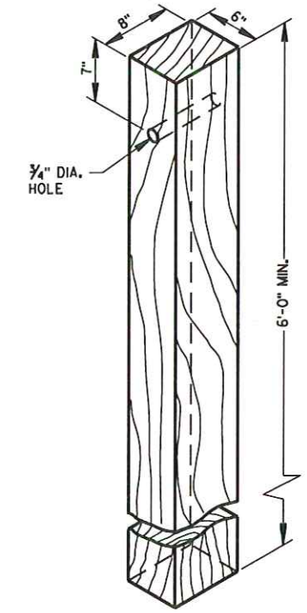

WOOD POST
(6"X8") NOMINAL

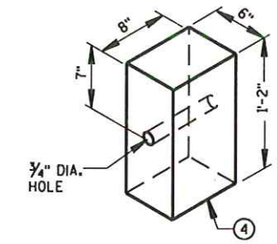

WOOD OR PLASTIC
BLOCKOUT FOR WOOD POSTS

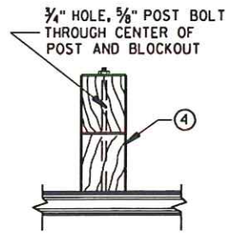

PLAN VIEW
WOOD POST, BLOCKOUT & BEAM

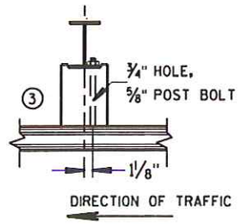

PLAN VIEW
STEEL POST, NOTCHED PLASTIC BLOCKOUT & BEAM

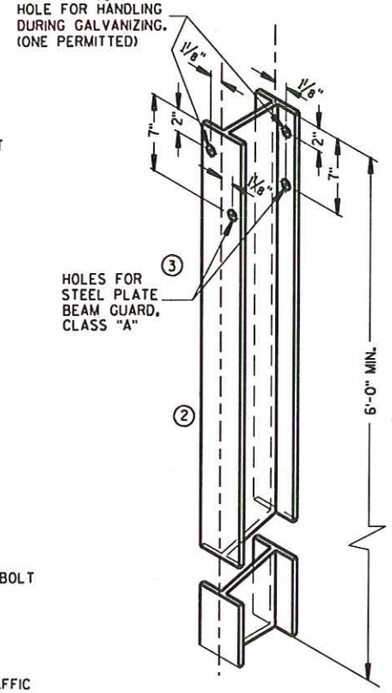

STEEL POST &
HOLE PUNCHING DETAIL
(W6 X 9) (1)

ALL HOLES 1⅜" DIAMETER EXCEPT AS NOTED

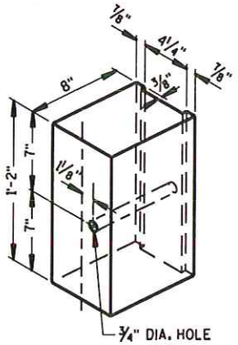

NOTCHED PLASTIC BLOCKOUT
FOR STEEL POSTS

TYPICAL INSTALLATION OF STEEL PLATE BEAM GUARD

STEEL PLATE BEAM GUARD,
CLASS "A"
INSTALLATION & ELEMENTS

STATE OF WISCONSIN
DEPARTMENT OF TRANSPORTATION

S.D.D. 14 B 15-4a

S.D.D. 14 B 15-4a

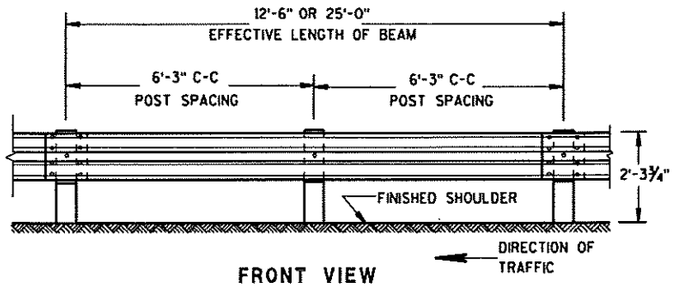

FRONT VIEW

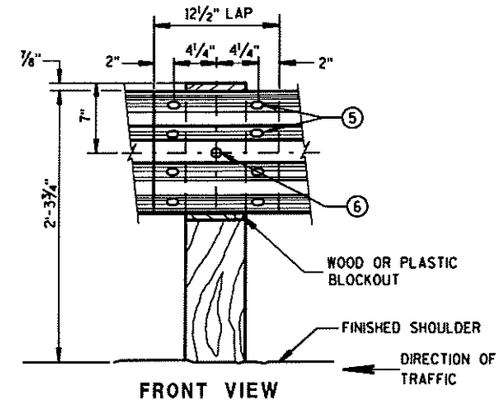

FRONT VIEW
BEAM SPLICE AT WOOD POST
AND POST MOUNTING DETAIL

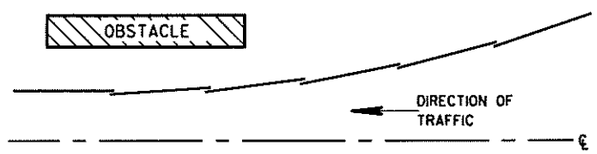

PLAN VIEW
BEAM LAPPING DETAIL

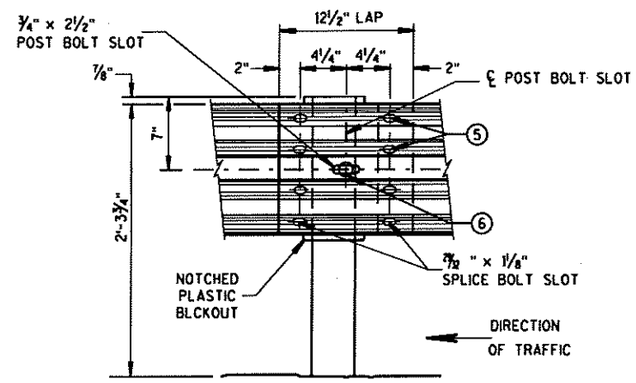

FRONT VIEW
BEAM SPLICE AT STEEL POST

TYPICAL SPLICING DETAILS OF STEEL PLATE BEAM GUARD

GENERAL NOTES

1. PROVIDE TYPE "H" SILVER REFLECTIVE SHEETING ON ALL REFLECTORS EXCEPT THOSE LOCATED ALONG THE LEFT EDGE OF ONE-WAY ROADWAYS, WHICH SHALL BE PROVIDED WITH TYPE "H" YELLOW REFLECTIVE SHEETING.
2. DO NOT INSTALL REFLECTORS ON THE FIRST 50 FEET OF THE APPROACH END OF THE ENERGY ABSORBING TERMINAL.
3. REVERSE EVERY OTHER REFLECTOR FOR 2-WAY VISIBILITY. THE CONTRACTOR MAY FURNISH TWO-SIDED REFLECTORS IN LIEU OF ONE-SIDED REFLECTORS.
4. PROVIDE AN ANGLE OF BEND OF 90° ± 1° FOR TWO-SIDED REFLECTORS.
5. 8 - ⅝" ϕ X 1¼" BUTTON HEAD BOLTS WITH OVAL SHOULDERS & RECESS NUTS.
6. ⅝" ϕ X 1'-6" BUTTON HEAD BOLT AND AND RECESS NUT WITH ROUND WASHER UNDER NUT.

REFLECTOR SPACING (2)

	BEAM GUARD LENGTH	REFLECTOR SPACING	NO. SURFACES REFLECTORIZED	MIN. NO. REFLECTORS
ONE WAY TRAFFIC	< 200' > 200'	50' C-C 100' C-C	1 1	3
TWO WAY TRAFFIC	< 200' > 200'	25' C-C 50' C-C	1 (3) 1	6
TWO WAY TRAFFIC	< 200' > 200'	50' C-C 100' C-C	2 (4) 2	3

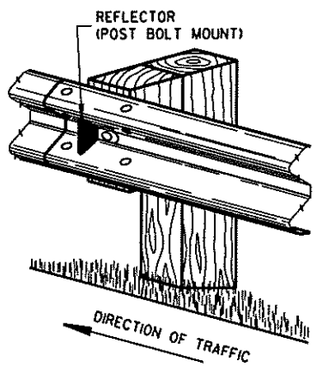

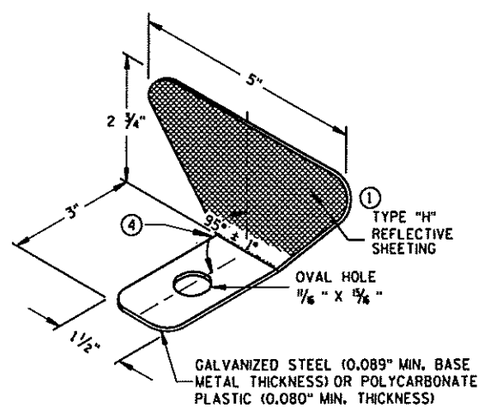

ONE SIDED REFLECTOR DETAIL AND TYPICAL INSTALLATION (1)

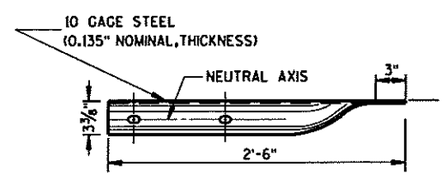

PLAN VIEW

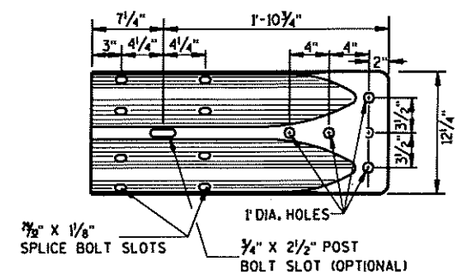

FRONT VIEW

W BEAM TERMINAL CONNECTOR

(USE ONLY ON THE TRAFFIC EXIT END OF ONE WAY BRIDGES)

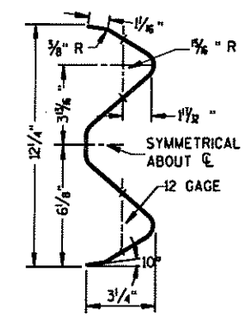

SECTION THRU W BEAM

STEEL PLATE BEAM GUARD,
CLASS "A",
INSTALLATION & ELEMENTS

STATE OF WISCONSIN
DEPARTMENT OF TRANSPORTATION

APPROVED
12/8/00
DATE
FHWA

John Haverberg
CHIEF ROADWAY DEVELOPMENT ENGINEER

S.D.D. 14 B 15-4b

S.D.D. 14 B 15-4b

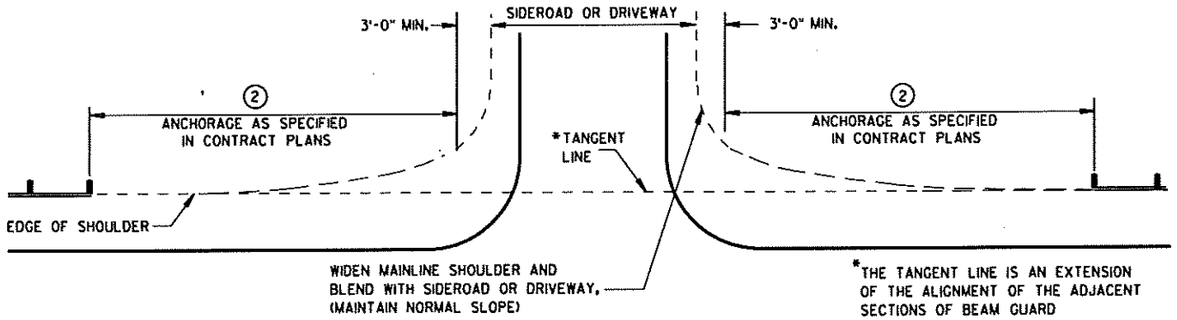

BEAM GUARD AT SIDEROADS OR DRIVEWAYS

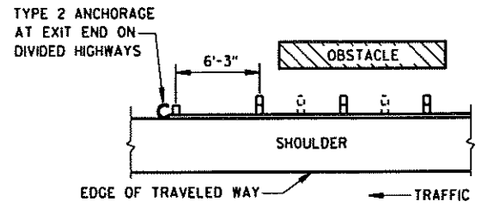

BEAM GUARD AT OBSTACLES EXIT END - ONE WAY TRAFFIC

GENERAL NOTES

DETAILS OF CONSTRUCTION, MATERIALS AND WORKMANSHIP NOT SHOWN ON THIS DRAWING SHALL CONFORM TO THE PERTINENT REQUIREMENTS OF THE STANDARD SPECIFICATIONS AND THE APPLICABLE SPECIAL PROVISIONS.

W6 X 9 OR W6 X 8.5 STEEL POSTS WITH NOTCHED PLASTIC BLOCKOUTS ARE ACCEPTABLE ALTERNATIVES FOR 6" X 8" WOOD POSTS WITH WOOD OR PLASTIC BLOCKOUTS. USE APPROVED NOTCHED PLASTIC BLOCKOUTS WITH STEEL POSTS.

THE LOCATIONS AND LENGTHS OF BEAM GUARD ARE SHOWN ELSEWHERE IN THE PLAN.

1. USE STEEL THRIE BEAM STRUCTURAL APPROACH (STBSA).
2. USE AN APPROVED END TREATMENT FOR THE TRAFFIC APPROACH SIDE OF BRIDGE/OBSTACLES. USE TYPE 2 ANCHORAGE ONLY AT THE DOWNSTREAM ENDS OF BEAM GUARD LOCATED ALONG ROADWAYS WITH ONE WAY TRAFFIC.

3 DESIGN DEFLECTION OF W-BEAM BARRIER SYSYTEM

LATERAL DISTANCE TO FIXED OBJECT	POST SPACING
3'-6" TO 4'-6"	3' - 1½"
4'-6" AND OVER	6' - 3"

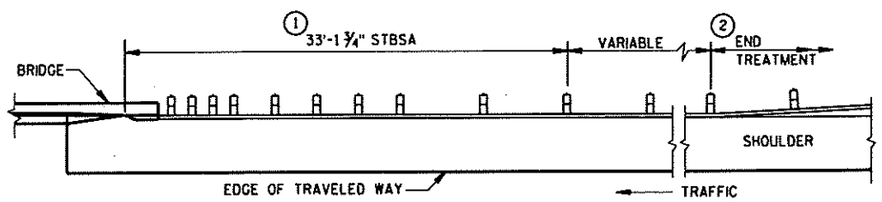

BEAM GUARD AT FULL WIDTH BRIDGES

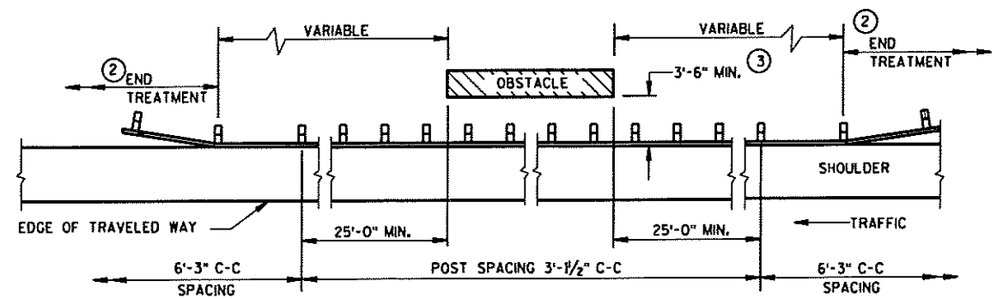

BEAM GUARD AT OSBSTACLES - TWO WAY TRAFFIC

(RAIL TO OBSTACLE CLEARANCE 3'-6" TO 4'-6")

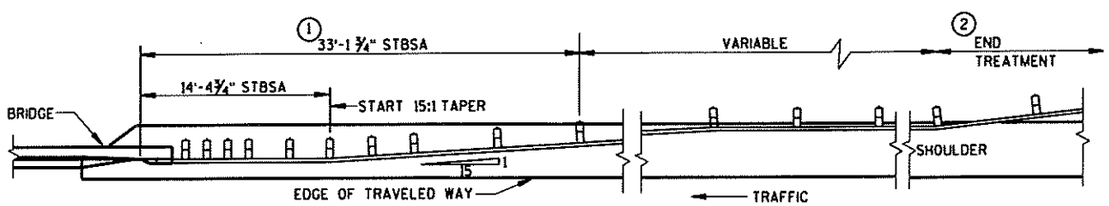

BEAM GUARD AT NARROW BRIDGES

(FLARED TO SHOULDER EDGE, THEN PARALLEL TO ROADWAY)

STEEL PLATE BEAM GUARD, CLASS "A" (AT BRIDGES, OBSTACLES AND SIDEROADS/DRIVEWAYS)

STATE OF WISCONSIN
DEPARTMENT OF TRANSPORTATION

APPROVED
12/8/00
DATE
John Haverberg
CHIEF ROADWAY DEVELOPMENT ENGINEER
FHWA

S.D.D. 14 B 18-4a

S.D.D. 14 B 18-4a

BILL OF MATERIALS

NOTE NO.	QTY.	DESCRIPTION
1	4	WOOD BREAKAWAY TERMINAL POST: 5½" X 7½" X 3'-9"
2	4	STEEL TUBE: TS 8" X 6" X 0.188", 4'-6" LONG
3	4	SOIL PLATE: 2'-0" X 1'-6" X ¼"
4	4	WOOD BREAKAWAY CRT POST: 6" X 8" X 6'-0"
5	6	WOOD OFFSET BLOCKS: 6" X 8" X 1'-2"
6	1	PIPE SLEEVE: 2" X 5 ½" STANDARD PIPE
7	1	BEARING PLATE
8	1	BCT CABLE ASSEMBLY
9	1	CABLE ANCHOR BOX
10	1	STRUT & YOKE
11	1	STEEL PLATE BEAM, END PANEL 12 GA. 13'-6½" LONG FOR SKT-350, ET-2000 AND ET-2000 PLUS
12	3	STEEL PLATE BEAM: 12 GA. 13'-6½"
13	1	ET-2000/ET-2000 PLUS GUARDRAIL EXTRUDER OR SKT-350 IMPACT HEAD: AS FURNISHED BY MANUFACTURER
14	1	REFLECTIVE SHEETING: 18" X 18"

GENERAL NOTES

(A) USE 3:1 OR FLATTER SLOPE FOR INSTALLATION ON EXISTING HIGHWAYS.

(B) DO NOT ATTACH GUARDRAIL TO POST BLOCKS AT POSTS NO. 3, 5 & 7.

(C) AFTER FINAL ASSEMBLY, RECHECK CABLE TO BE SURE IT IS TAUT AND HAS NOT RELAXED.

STEEL POSTS SHALL NOT BE ALLOWED FOR USE WITH ENERGY ABSORBING TERMINALS.

DO NOT INSTALL REFLECTORS ON THE FIRST 50 FEET OF THE APPROACH END OF THE ENERGY ABSORBING TERMINAL.

*DO NOT ATTACH BLOCKOUTS TO POSTS 1 AND 2.

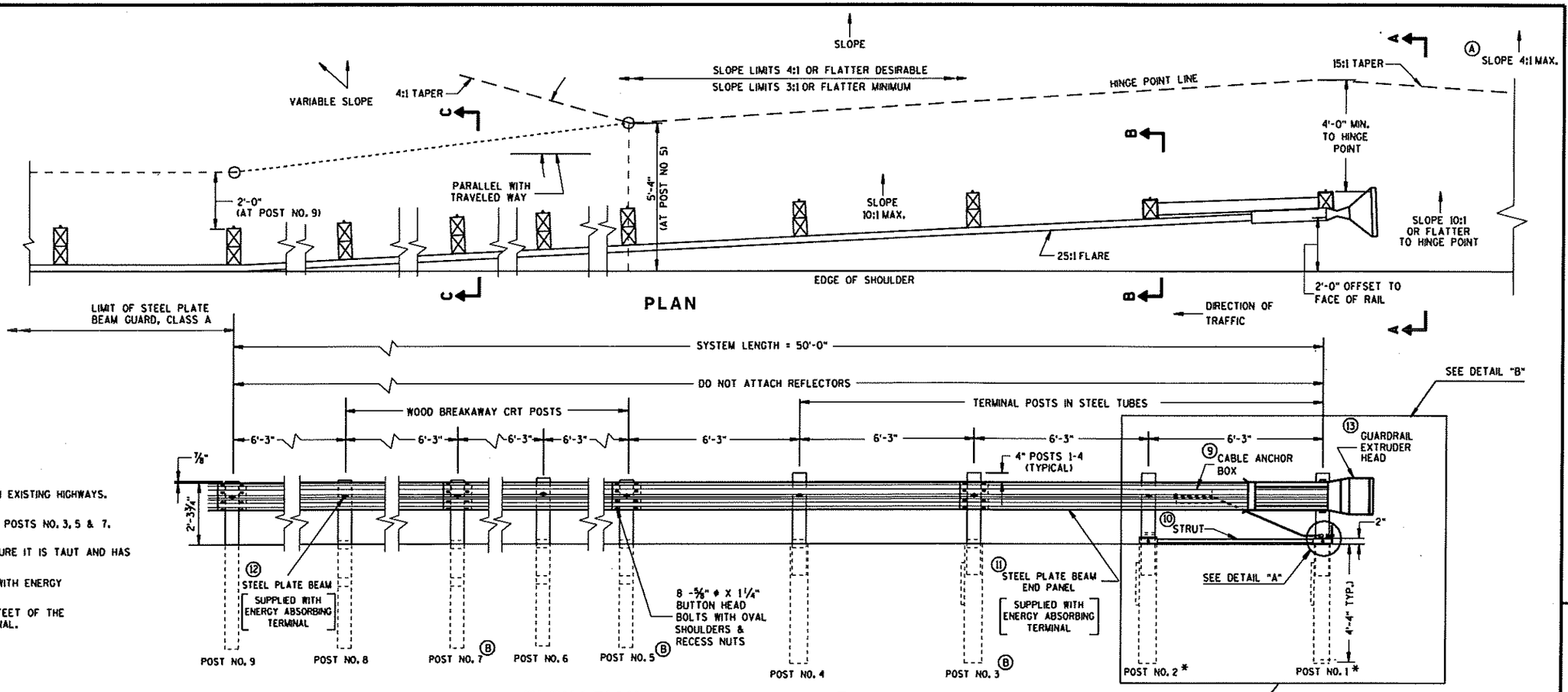

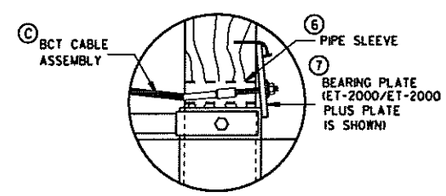

DETAIL "A"

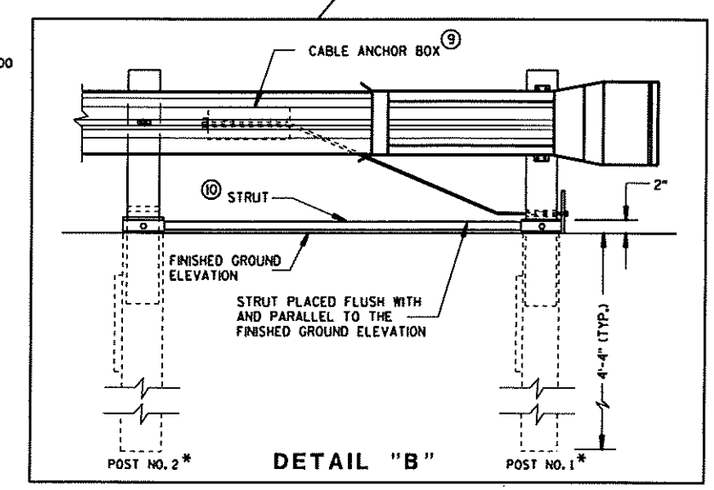

DETAIL "B"

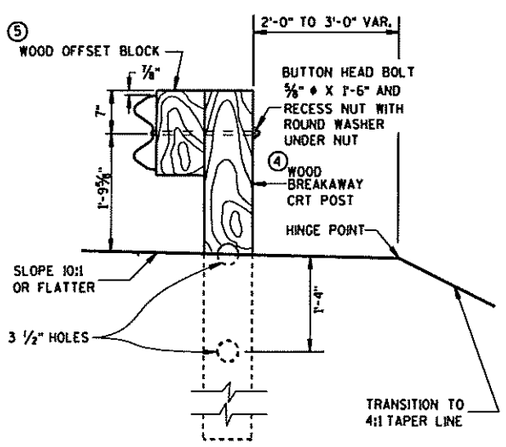

SECTION C-C

TYPICAL AT POST NOS. 4, 6, 8

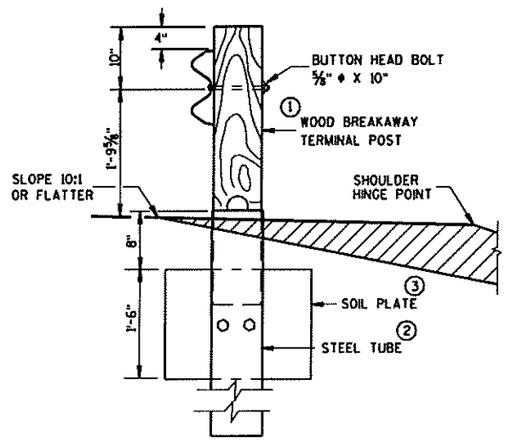

SECTION B-B

TYPICAL AT POST NO. 2*

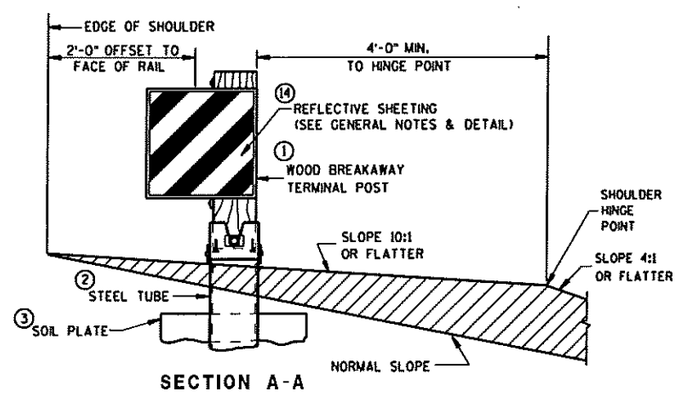

SECTION A-A

TYPICAL AT POST NO. 1*

STEEL PLATE BEAM GUARD
ENERGY ABSORBING TERMINAL

STATE OF WISCONSIN
DEPARTMENT OF TRANSPORTATION

6

S.D.D. 14 B 24-4a

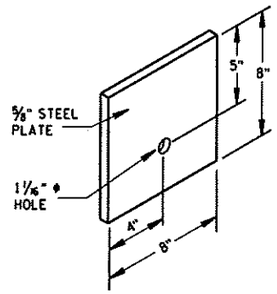

STEEL BEARING PLATE (SKT-350)

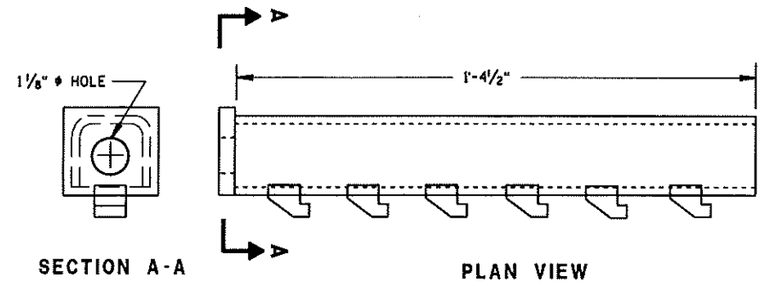

CABLE ANCHOR BOX (ET-2000/ET-2000 PLUS)

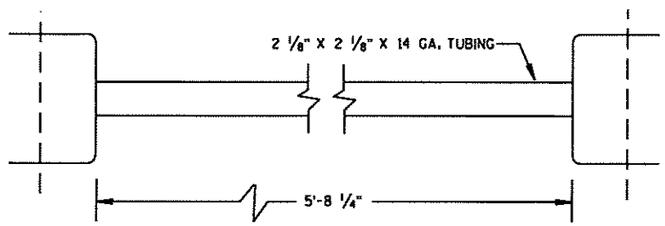

STRUT DETAIL (SKT-350)

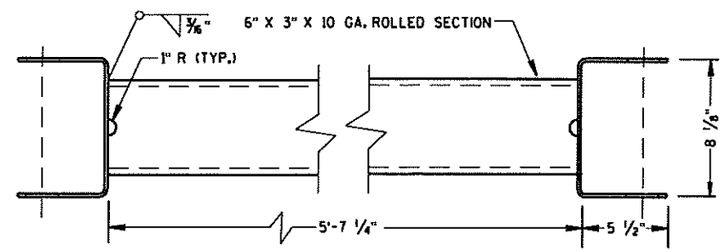

STRUT DETAIL (ET-2000/ET-2000 PLUS)

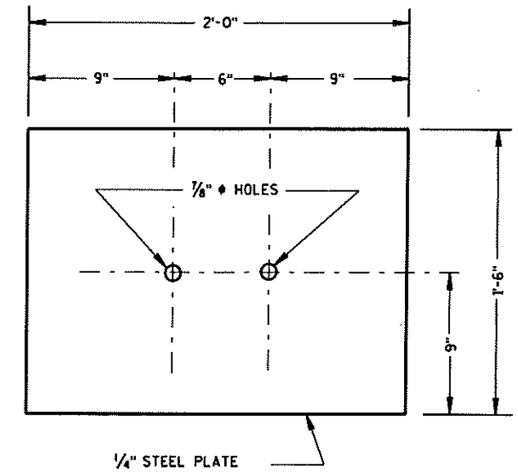

SOIL PLATE
(SKT-350, ET-2000/ET-2000 PLUS)

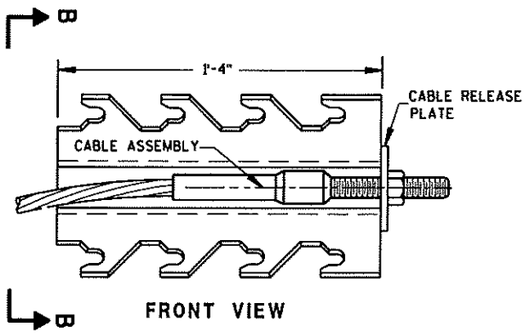

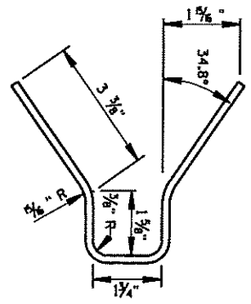

SECTION B-B

CABLE ANCHOR BOX (SKT-350)

(SKT-350)

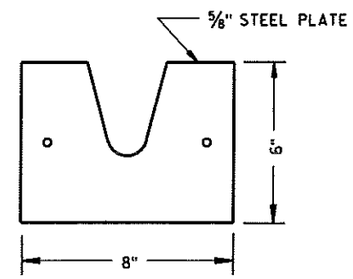

STEEL BEARING PLATE
(ET-2000/ET-2000 PLUS)

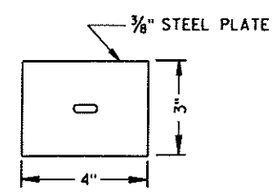

BEARING PLATE WASHER
(ET-2000/ET-2000 PLUS)

(ET-2000/ET-2000 PLUS)

STEEL PLATE BEAM GUARD
ENERGY ABSORBING TERMINAL

STATE OF WISCONSIN
DEPARTMENT OF TRANSPORTATION

6

6

S.D.D. 14 B 24-4b

S.D.D. 14 B 24-4b

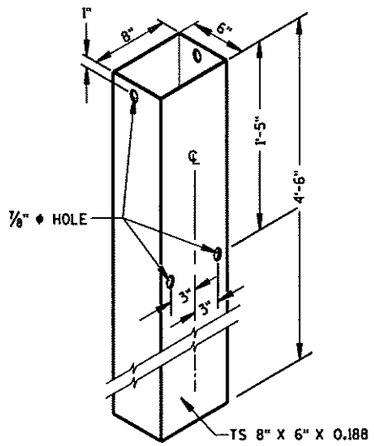

STEEL TUBE
(POSTS NO. 1-4
THE STEEL TUBE SHALL CONFORM
TO REQUIREMENTS OF ASTM A500

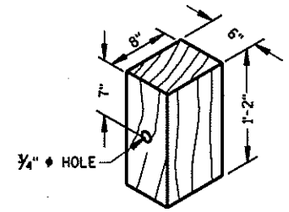

WOOD OFFSET BLOCK
REQ'D. AT ALL POSTS EXCEPT POST NO'S 1 & 2

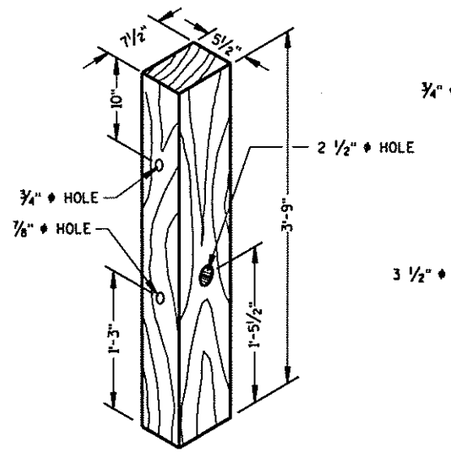

TERMINAL POST
(POSTS NO. 1-4

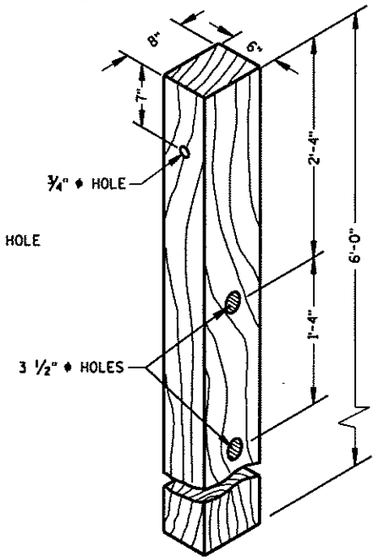

CRT POST
(POSTS NO'S 5-8

WOOD BREAKAWAY POSTS

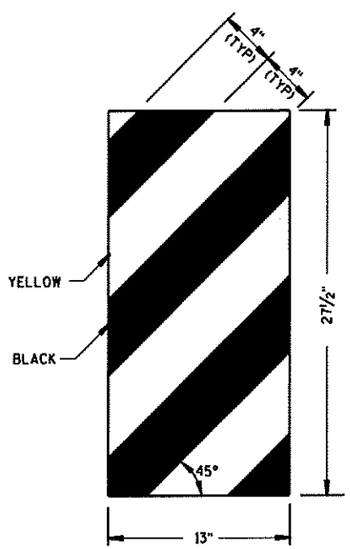

ET-2000 PLUS ONLY

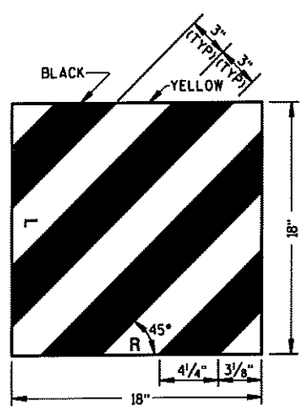

ET-2000 AND SKT-350

REFLECTIVE SHEETING DETAILS

GENERAL NOTES

DETAILS OF CONSTRUCTION, MATERIALS AND WORKMANSHIP NOT SHOWN ON THIS DRAWING SHALL CONFORM TO THE PERTINENT REQUIREMENTS OF THE STANDARD SPECIFICATIONS, APPLICABLE SPECIAL PROVISIONS AND MANUFACTURERS INSTRUCTIONS.

STEEL PLATE BEAM GUARD ENERGY ABSORBING TERMINAL SHALL BE EITHER THE EXTRUDER TERMINAL (ET-2000), OR THE SEQUENTIAL KINKING TERMINAL (SKT-350). THE CONTRACTOR SHALL NOT INTERMIX PROPRIATERY PRODUCT MATERIALS.

STEEL PLATE BEAM GUARD, ENERGY ABSORBING TERMINAL SHALL BE PAID FOR AT THE CONTRACT UNIT PRICE EACH, WHICH SHALL INCLUDE HARDWARE, STEEL PLATE BEAM GUARD, POSTS, REFLECTIVE SHEETING AND INSTALLATION AS SHOWN.

REFLECTIVE SHEETING - SHALL CONFORM TO ASTM SPECIFICATION D4956-94, REFLECTIVE SHEETING TYPE III, BACKING CLASS 4, PERFORMANCE REQUIREMENT TYPE III. THE MESSAGE AND LINES SHALL BE APPLIED TO THE SIGNS BY THE SILK SCREEN STENCIL PROCESS USING A BLACK OR DARK STENCIL PASTE AS A TYPE APPROVED BY THE MANUFACTURER OF THE FACE MATERIAL TO WHICH IT IS TO BE APPLIED. MESSAGE UNITS CUT FROM NONREFLECTIVE SHEETING AND APPLIED TO THE SIGN FACE ARE NOT ACCEPTABLE. AFTER THE APPROACH END OF THE STEEL PLATE BEAM GUARD INSTALLATION IS COMPLETE, CLEAN THE AREA WHERE THE REFLECTIVE SHEETING WILL BE APPLIED IN ACCORDANCE WITH THE MANUFACTURERS RECOMMENDATION. ONCE CLEAN, APPLY REFLECTIVE SHEETING DIRECTLY TO THE STEEL PLATE BEAM GUARD AS SHOWN. THE CONTRACTOR SHALL TURN OVER THE MANUFACTURERS WARRANTY FOR THE REFLECTIVE SHEETING TO THE DEPARTMENT FOR POTENTIAL DEALING WITH THE MANUFACTURER. PAYMENT OF REFLECTIVE SHEETING IS INCIDENTAL TO STEEL PLATE BEAM GUARD, ENERGY ABSORBING TERMINAL.

WHEN ROCK IS ENCOUNTERED DURING EXCAVATION, A 12 INCH DIA. POST HOLE EXTENDING 20 INCHES DEEP INTO THE ROCK MAY BE USED IF APPROVED BY THE ENGINEER. GRANULAR MATERIAL SHALL BE PLACED IN THE BOTTOM OF THE HOLE APPROXIMATELY 2 1/2" INCHES DEEP TO PROVIDE DRAINAGE. THE SOIL TUBES SHALL BE FIELD CUT TO LENGTH, PLACED IN THE HOLE AND BACKFILLED WITH ADEQUATELY COMPACTED MATERIAL EXCAVATED FROM THE HOLE.

STEEL PLATE BEAM GUARD
ENERGY ABSORBING TERMINAL

STATE OF WISCONSIN
DEPARTMENT OF TRANSPORTATION

APPROVED
6-25-03
DATE
CHIEF ROADWAY DEVELOPMENT ENGINEER
FHWA

6
S.D.D. 14 B 24-4c

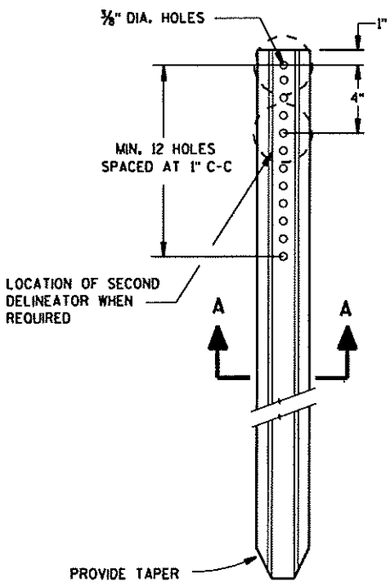

DELINEATOR POST

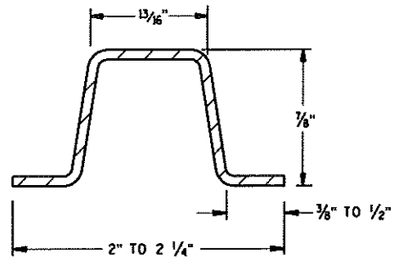

SECTION A-A

WEIGHT 1.12 LBS PER FT. ± 0.1 LB.

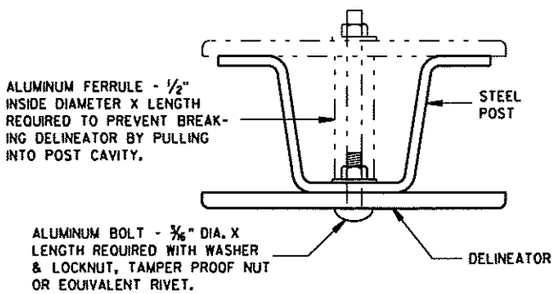

MOUNTING DETAIL FOR DELINEATOR

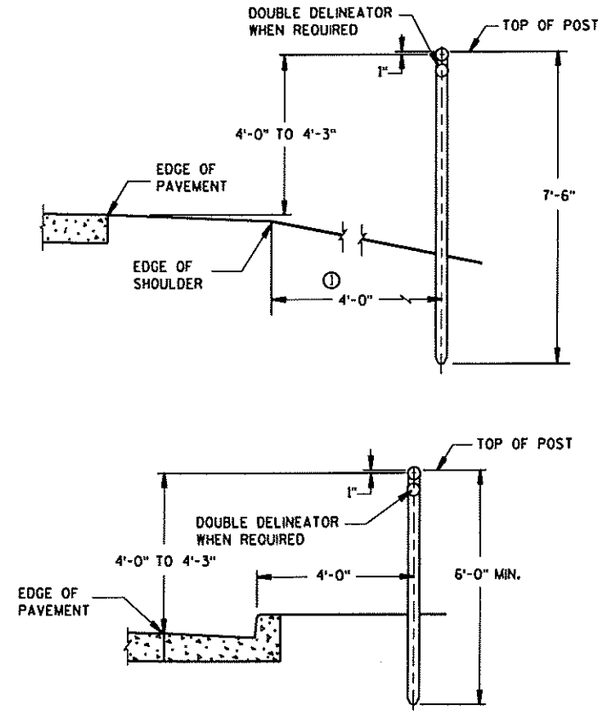

TYPICAL INSTALLATIONS OF DELINEATOR POSTS

GENERAL NOTES

DETAILS OF CONSTRUCTION NOT SHOWN ON THIS DRAWING SHALL CONFORM TO THE PERTINENT REQUIREMENTS OF THE STANDARD SPECIFICATIONS AND THE APPLICABLE SPECIAL PROVISIONS.

① DELINEATORS SHALL BE PLACED AT A CONSTANT DISTANCE FROM THE EDGE OF THE SHOULDER FOR THE LENGTH OF THE INSTALLATION.

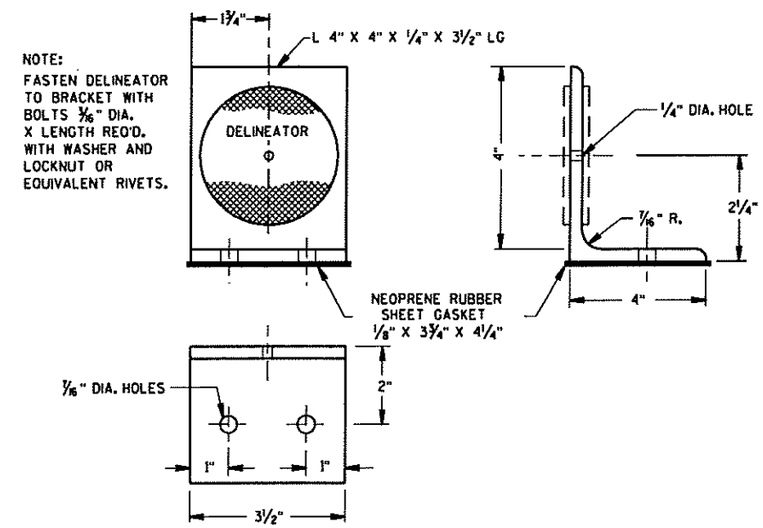

DELINEATOR BRACKET

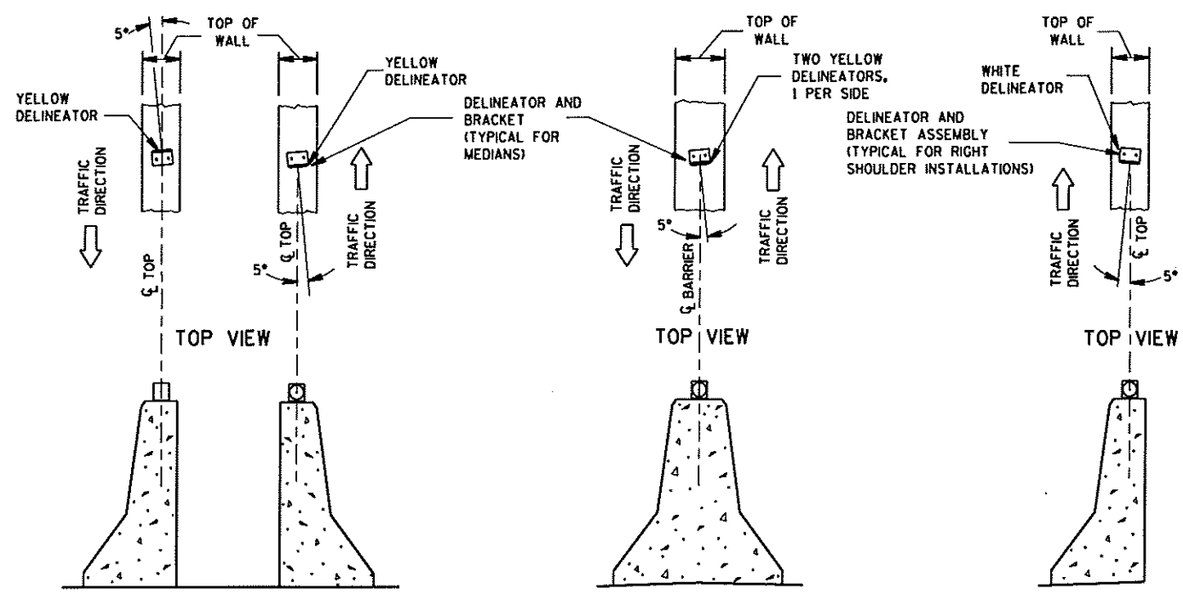

DOUBLE BARRIERS IN MEDIAN

MEDIAN BARRIER

BARRIER LOCATED TO RT. OF TRAFFIC FLOW

LOCATION AND AIMING DETAILS FOR DELINEATORS MOUNTED ON CONCRETE BARRIERS

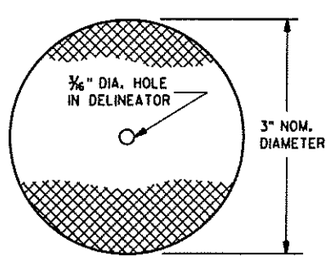

DELINEATOR

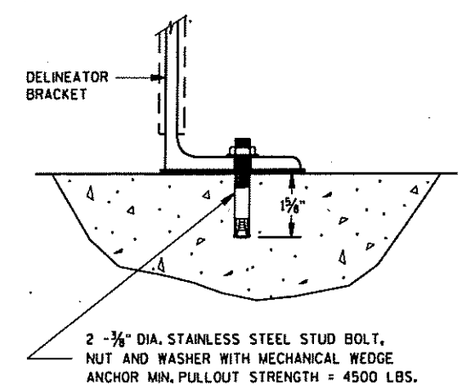

DELINEATOR BRACKET MOUNTING DETAIL

DELINEATOR POST, DELINEATOR BRACKET AND DELINEATOR	
STATE OF WISCONSIN DEPARTMENT OF TRANSPORTATION	
APPROVED 2/19/04 DATE FHWA	Thomas N. Notboh STATE TRAFFIC ENGINEER OF DESIGN

S.D.D. 15 A 2-6
6

GENERAL NOTES

* USE DOUBLE DELINEATOR ALONG ACCELERATION-DECELERATION LANES AND TAPERS. USE SINGLE DELINEATOR WHEN RAMP PAVEMENT IS FULL WIDTH.

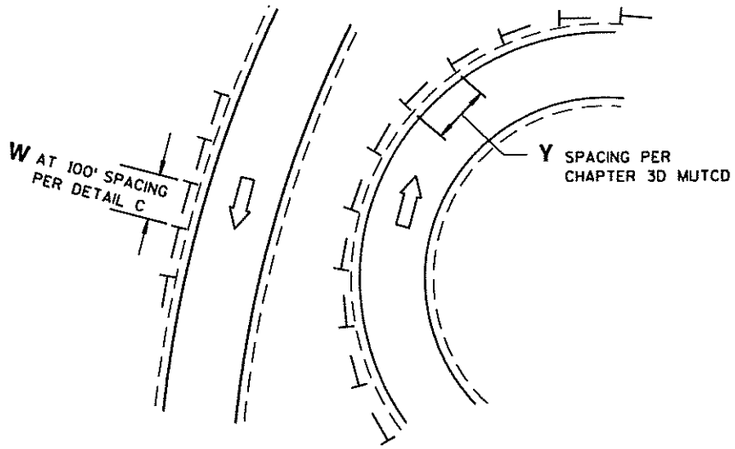

DETAIL A
DELINEATOR LAYOUT AT CURVED RAMP

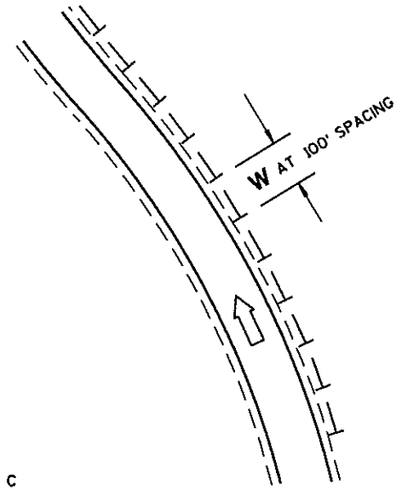

DETAIL C
DELINEATOR LAYOUT ALONG RAMP

LEGEND

⇨	DIRECTION OF TRAFFIC FLOW
⊥	SINGLE DELINEATOR
⊥⊥	DOUBLE DELINEATOR
W	WHITE
Y	YELLOW

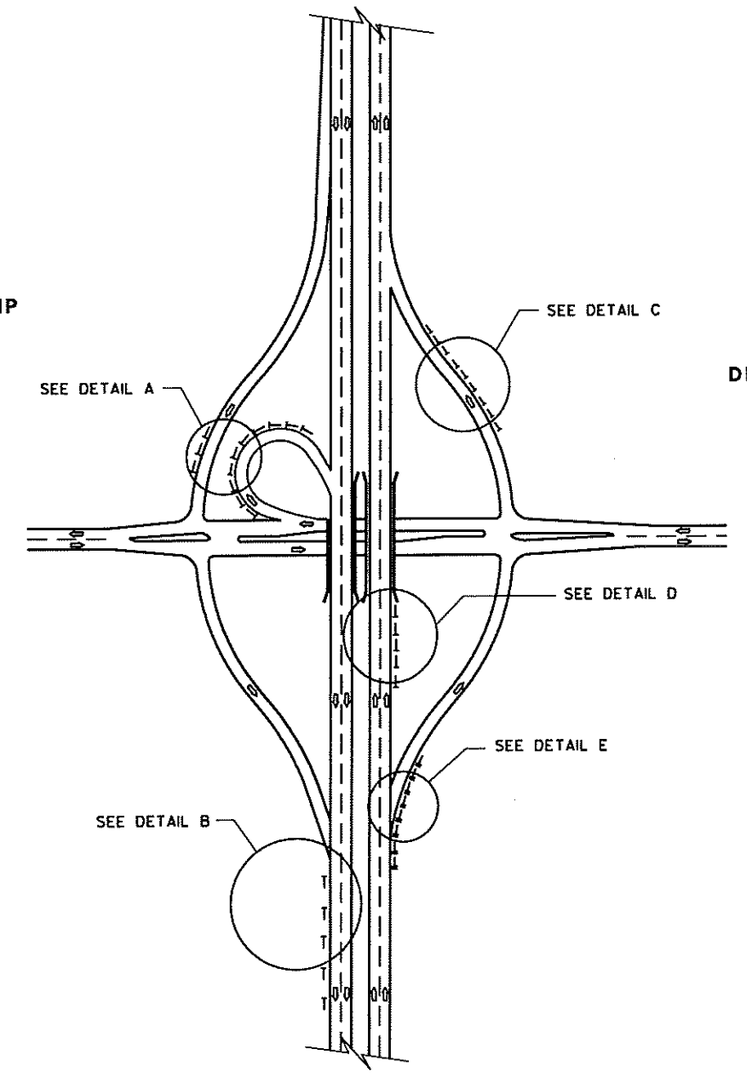

DELINEATOR LAYOUT

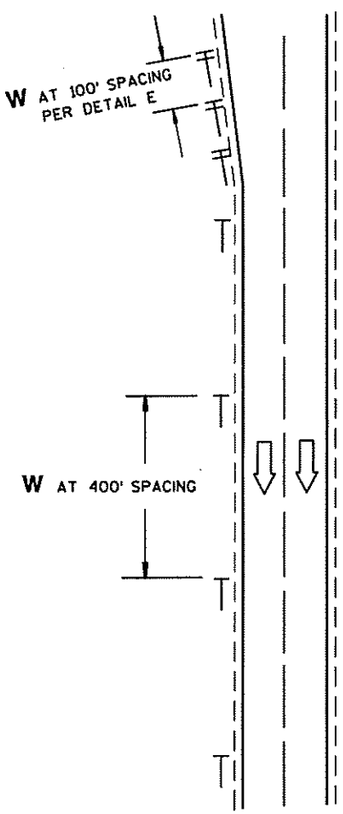

DETAIL B
DELINEATOR LAYOUT
ALONG MAINLINE

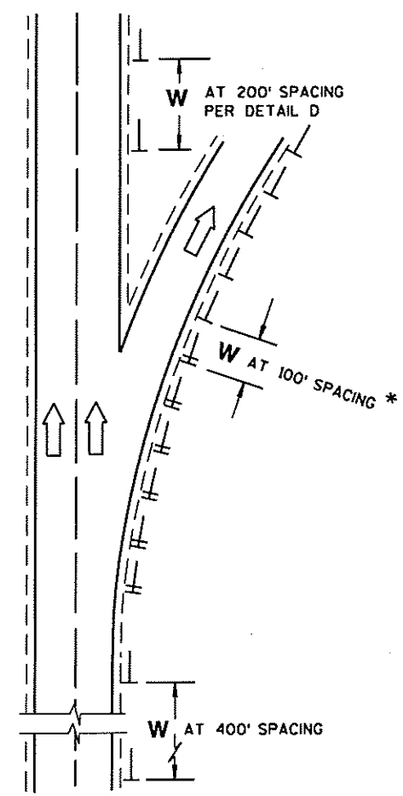

DETAIL E
DELINEATOR LAYOUT FOR ACCELERATION
- DECELERATION LANES AND TAPERS AT RAMPS

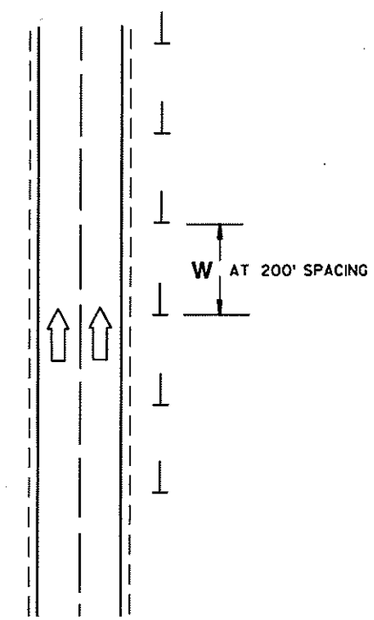

DETAIL D
DELINEATOR LAYOUT
BETWEEN INTERCHANGE RAMPS

DELINEATOR LAYOUT

STATE OF WISCONSIN
DEPARTMENT OF TRANSPORTATION

APPROVED 3/28/05 DATE
Thomas N. Notbohm
STATE TRAFFIC ENGINEER OF DESIGN
FHWA

6

S.D.D. 15 A 6-1

6

S.D.D. 15 A 6-1

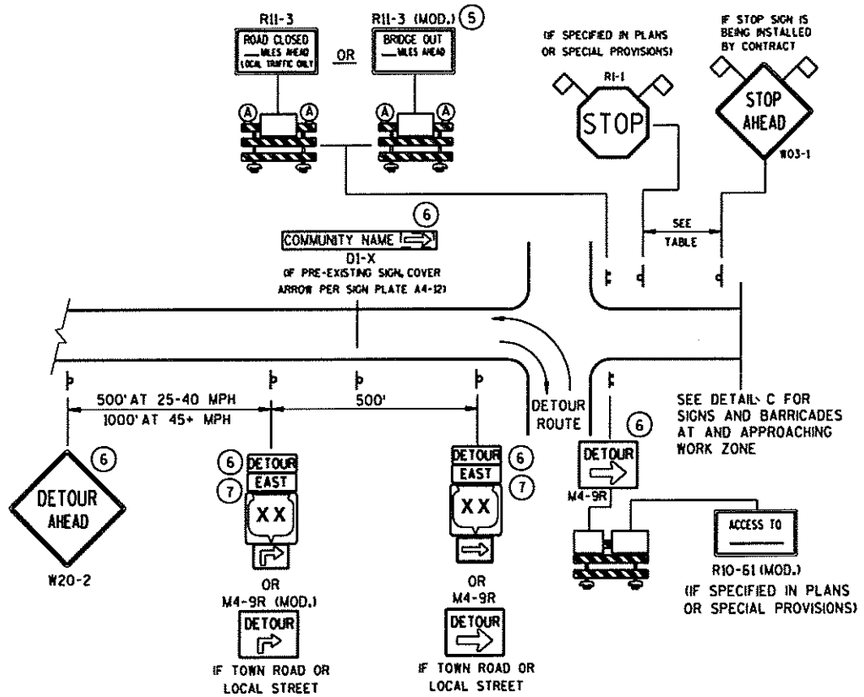

DETAIL A

MAINLINE CLOSURE WITH POSTED DETOUR

WORK ZONE GREATER THAN ½ MILE FROM DETOUR ROUTE (1000 FEET IF URBAN)

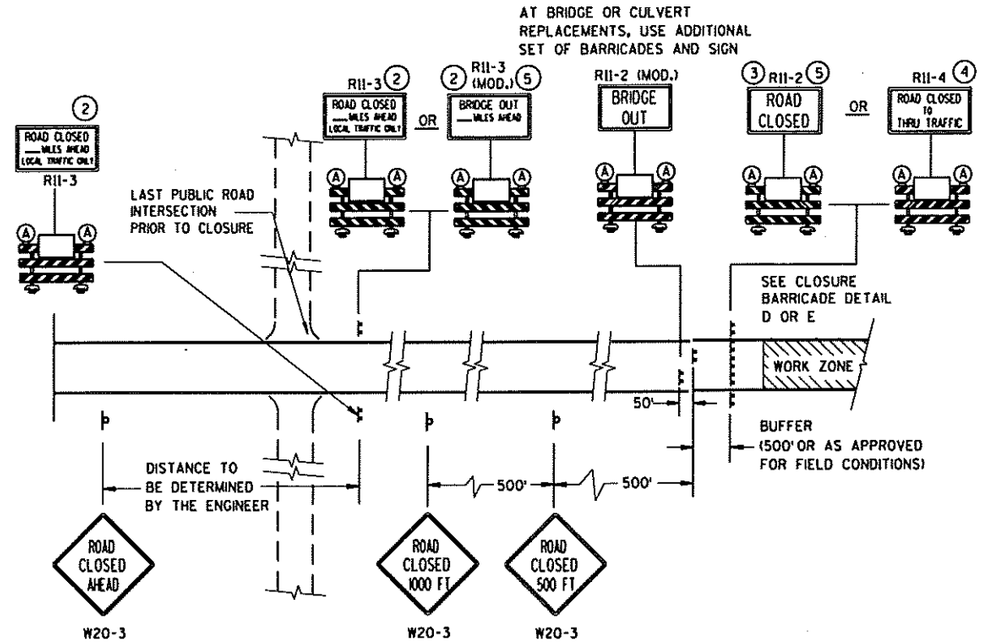

DETAIL C

MAINLINE CLOSURE, NO POSTED DETOUR

SPEED LIMIT (MPH)	"STOP AHEAD" ADVANCE WARNING DISTANCE (FT)
25	200
30	200
35	350
40	350
45	500
50	550
55	750

SEE SDD 15C2-4b FOR GENERAL NOTES AND FOOTNOTES 1 THROUGH 7

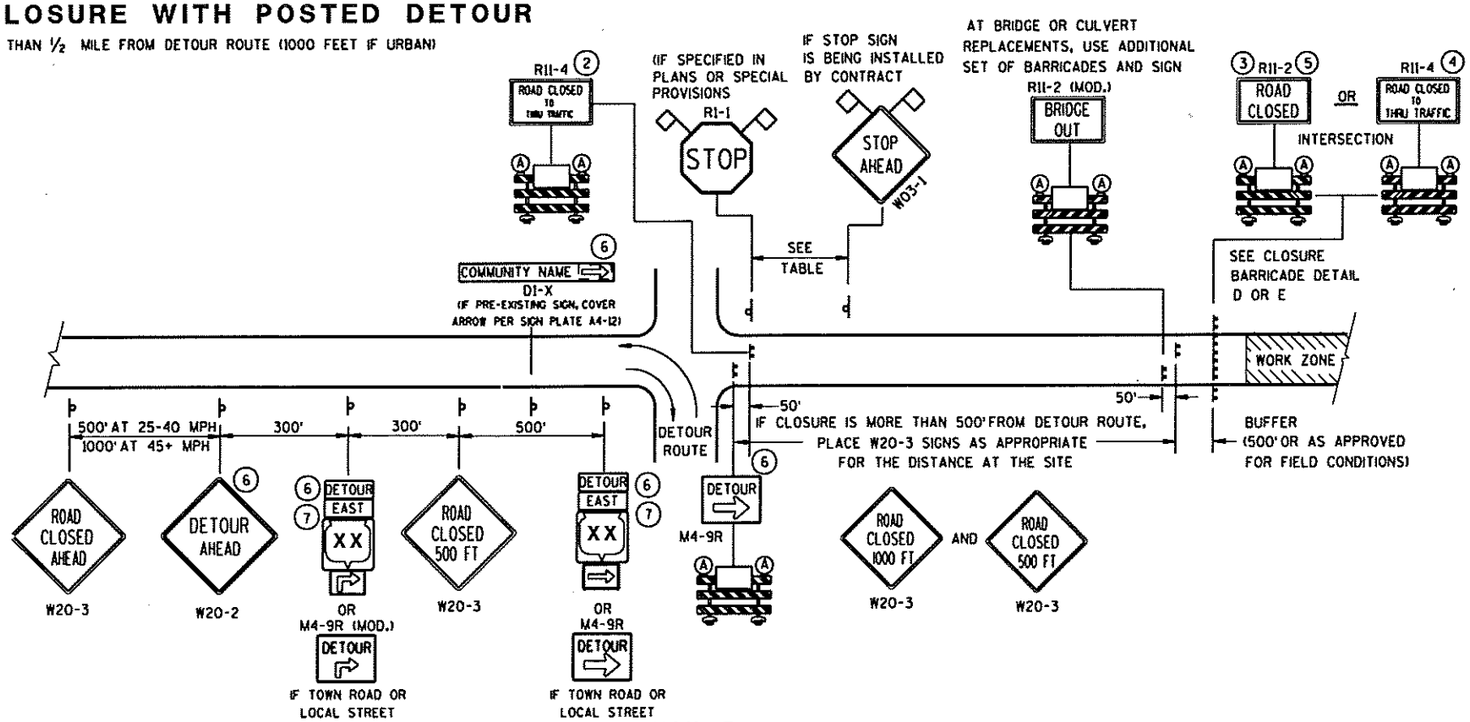

DETAIL B

MAINLINE CLOSURE WITH POSTED DETOUR

WORK ZONE LESS THAN ½ MILE FROM DETOUR ROUTE (1000 FEET IF URBAN)

LEGEND

- POST MOUNTED SIGN
- TYPE III BARRICADES
- TYPE "A" LOW INTENSITY FLASHING WARNING LIGHT (FOR NIGHT USE)
- WORK ZONE
- DETOUR / EAST — M4-8 / M3-X
- XX — M1-4; OR COUNTY XX — M1-5A; OR XX — M1-6
- M05-1 OR M06-1
- FLAGS, 16" X 16" MIN., (ORANGE)

BARRICADES AND SIGNS FOR MAINLINE CLOSURES

STATE OF WISCONSIN
DEPARTMENT OF TRANSPORTATION

6

S.D.D. 15 C 2-4a

6

S.D.D. 15 C 2-4a

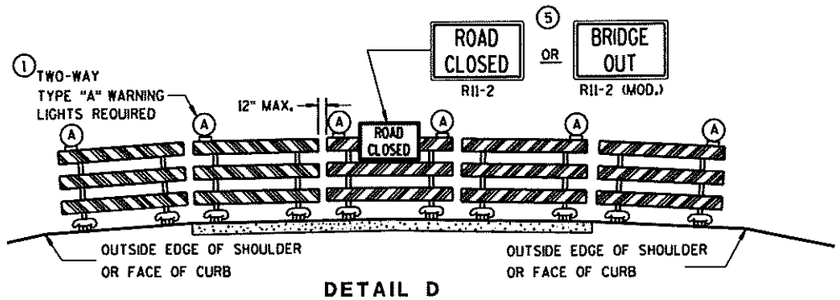

DETAIL D

ROAD CLOSURE BARRICADE DETAIL

APPROACH VIEW

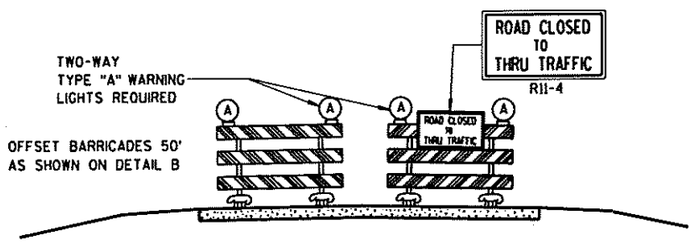

DETAIL E

LANE CLOSURE BARRICADE DETAIL

APPROACH VIEW

SEE SDD 15C2-4a FOR LEGEND

GENERAL NOTES

THE EXACT NUMBER, LOCATION, AND SPACING OF ALL SIGNS AND BARRICADES SHALL BE ADJUSTED TO FIT FIELD CONDITIONS AS APPROVED BY THE ENGINEER.

ANY SIGNS TEMPORARY OR EXISTING, WHICH CONFLICT WITH TRAFFIC CONTROL "IN USE" SHALL BE REMOVED OR COVERED AS NEEDED AND AS APPROVED BY THE ENGINEER.

THE SPACING BETWEEN TRAFFIC CONTROL SIGNS SHOULD BE ADJUSTED TO NOT CONFLICT WITH AND SHOULD PROVIDE A DESIRABLE MINIMUM OF 200 FEET CLEARANCE TO EXISTING SIGNS THAT WILL REMAIN IN PLACE.

BARRICADES THAT MUST BE MOVED FOR A WORK OPERATION SHALL BE IMMEDIATELY RE-ESTABLISHED UPON COMPLETION OF THE OPERATION OR, FOR CONTINUING OPERATIONS, AT THE END OF EACH WORKING DAY.

SIGNS THAT WILL BE IN PLACE LESS THAN 7 CONTINUOUS DAYS AND NIGHTS MAY BE MOUNTED ON PORTABLE SUPPORTS.

ALL TYPE III BARRICADES SHALL HAVE RAILS REFLECTORIZED ON BOTH FACES. STRIPES SHALL BE PROPERLY SLOPED DOWN TOWARD THE TRAFFIC SIDE OR AS SHOWN IN THE ROAD CLOSURE BARRICADE DETAIL D FOR FULL ROAD CLOSURES.

TYPE "A" LOW-INTENSITY FLASHING WARNING LIGHTS SHALL BE VISIBLE ON BOTH SIDES OF THE BARRICADE.

THE R11-2, R11-3, M4-9, R11-4 AND R10-61 SIGNS PLACED ON BARRICADES SHALL COVER NO MORE THAN THE TOP RAIL. THE SIGNS SHALL NOT COVER ANY PORTION OF THE MIDDLE OR BOTTOM RAILS.

THE REFLECTIVE SHEETING USED ON R11-2, R11-3, R11-4, R10-61 AND R1-1 SIGNS SHALL COMPLY WITH SUBSECTION 637.2.2.2 OF THE STANDARD SPECIFICATIONS.

"WO AND "MO" SIGNS ARE THE SAME AS "W" AND "M" SIGNS EXCEPT THE BACKGROUND IS ORANGE.

ALL SIGNS SHALL BE 48" X 48" UNLESS OTHERWISE NOTED BELOW:

R11-2 SHALL BE 48" X 30".
R11-3, R11-4 AND R10-61 SHALL BE 60" X 30".
M4-9 SHALL BE 30" X 24".
M3-X AND M4-8 SHALL BE 24" X 12". (30" X 15" IF NEEDED TO MATCH EXISTING SIGNS.)
M1-4, M1-5A, AND M1-6 SHALL BE 24" X 24". (36" X 36" IF NEEDED TO MATCH EXISTING SIGNS.)
M05-1 AND M06-1 SHALL BE 21" X 21". (30" X 30" IF NEEDED TO MATCH EXISTING SIGNS.)
D1-X SHALL BE AS SHOWN ON SPECIFIC PROJECT SIGNING DETAIL SHEETS.
R1-1 SHALL BE 36" X 36".

1. TWO WARNING LIGHTS SHALL BE PROVIDED ON THE CENTER BARRICADE AND A MINIMUM OF ONE WARNING LIGHT SHALL BE PROVIDED ON EACH OF THE OTHER BARRICADES WITHIN THE ROADWAY LIMITS. SPACING OF THE WARNING LIGHTS SHALL BE UNIFORM TO THE EDGE OF ROADWAY AS SHOWN (APPROX. 8-FOOT LIGHT SPACING).
2. THESE SIGNS AND BARRICADES ARE NOT REQUIRED IF ROAD CLOSURE BEGINS AT INTERSECTION.
3. FOR ROAD CLOSURE WITHOUT LOCAL ACCESS TO PROJECT, SEE ROAD CLOSURE BARRICADE DETAIL D.
4. FOR ROAD CLOSURE WITH LOCAL ACCESS TO PROJECT, SEE LANE CLOSURE BARRICADE DETAIL E.
5. FOR BRIDGE OR CULVERT REPLACEMENTS, SUBSTITUTE "BRIDGE OUT" INSTEAD OF "ROAD CLOSED" ON R11-2 AND R11-3 SIGNS.
6. INSTALL DETOUR AND COMMUNITY GUIDE SIGNS AND ARROWS ONLY IF SPECIFIED IN THE CONTRACT. IF THERE ARE EXISTING ROUTE MARKER ASSEMBLIES THAT WILL REMAIN IN PLACE, ADJUST THE LOCATION OF THE DETOUR ROUTE SIGNS TO CORRESPOND WITH THE EXISTING ASSEMBLIES. MODIFY EXISTING SIGNS WHERE POSSIBLE. SEE SPECIFIC PROJECT DETOUR SIGNING DETAIL SHEETS. IF DETOUR SIGNS ARE BEING INSTALLED BY OTHERS, PLACE THE CONTRACTED TRAFFIC CONTROL SIGNS TO ALLOW FOR PLACEMENT OF ALL WARNING, DETOUR AND GUIDE SIGNS AS SHOWN.
7. "EAST" CARDINAL DIRECTION MARKERS AND RIGHT TURN ARROWS ARE SHOWN. USE OTHER CARDINAL DIRECTIONS AND ARROWS AS APPROPRIATE.

BARRICADES AND SIGNS FOR MAINLINE CLOSURES

STATE OF WISCONSIN
DEPARTMENT OF TRANSPORTATION

APPROVED
9/16/03
DATE
Thomas N. Notthom for
CHIEF SIGNS AND MARKING ENGINEER
FHWA

6
S.D.D. 15 C 2-4b

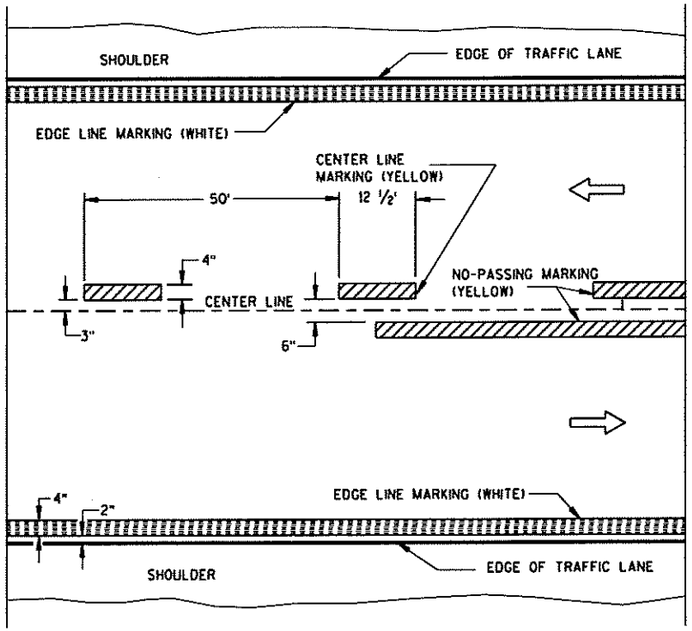

TWO WAY TRAFFIC

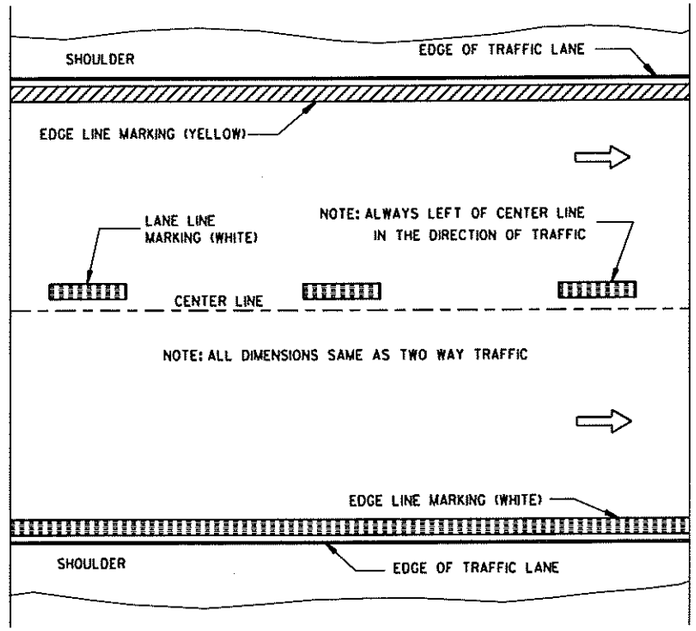

ONE WAY TRAFFIC

PERMANENT PAVEMENT MARKING

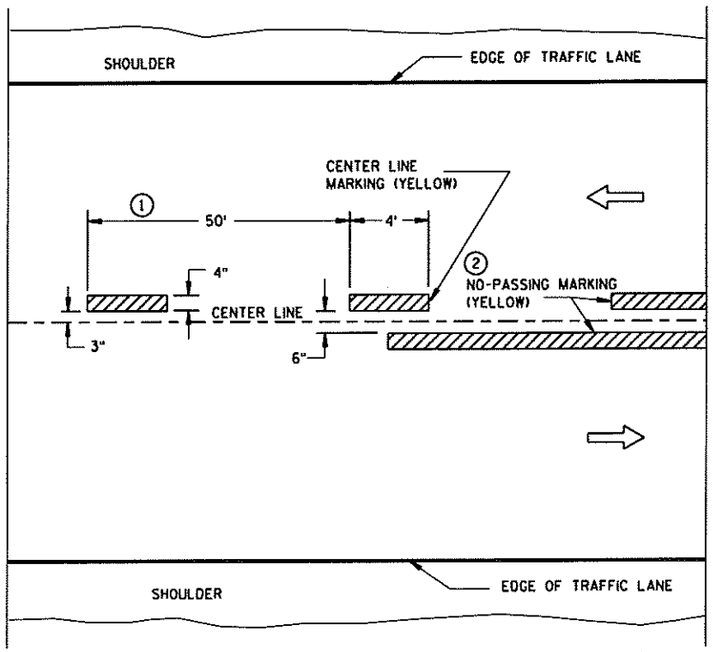

TWO WAY TRAFFIC

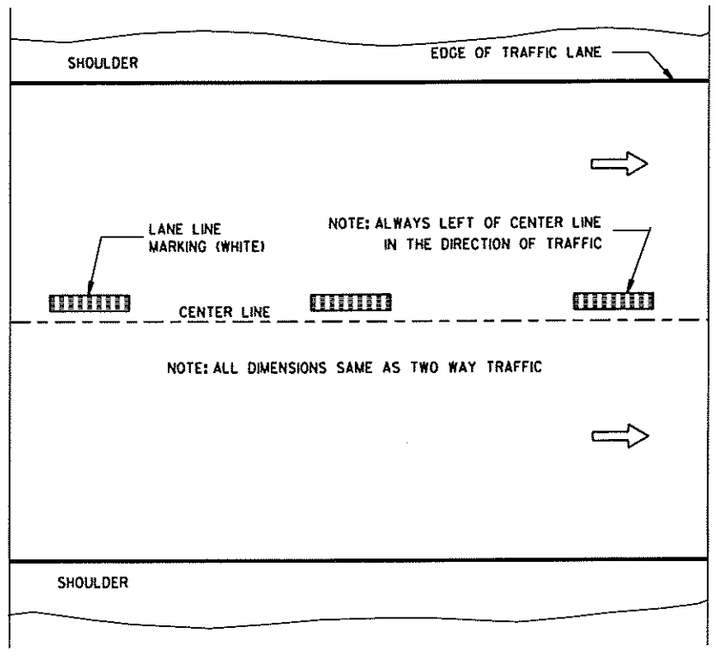

ONE WAY TRAFFIC

TEMPORARY (INTERMEDIATE) PAVEMENT MARKING

(SHOWS CYCLE FOR TEMPORARY CENTER LINE OR TEMPORARY LANE LINE MARKING)

GENERAL NOTES

DETAILS OF CONSTRUCTION NOT SHOWN ON THIS DRAWING SHALL CONFORM TO STANDARD SPECIFICATIONS AND SPECIAL PROVISIONS.

1. HALF CYCLE LENGTHS (25'±) WITH 2' MINIMUM STRIPE LENGTHS SHALL BE PROVIDED ON ROADWAYS (INCLUDING TEMPORARY TRAVELED WAYS) WITH REVERSE CURVATURE, CURVATURE OF OVER 5 DEGREES OR WHEN DIRECTED BY THE ENGINEER TO MARK UNUSUAL ALIGNMENT OF THE TRAVELED WAY.

2. NO PASSING ZONE TEMPORARY PAVEMENT MARKING IS REQUIRED TO BE PLACED, WHERE APPROPRIATE, ALONG WITH CENTERLINE TEMPORARY PAVEMENT MARKING WHEN A SAME DAY PERMANENT PAVEMENT MARKING ITEM IS INCLUDED IN THE CONTRACT.

NOTE

ARROW SYMBOL (⇨) SHOWS DIRECTION OF TRAVEL

PAVEMENT MARKING (MAINLINE)

STATE OF WISCONSIN
DEPARTMENT OF TRANSPORTATION

APPROVED
3/6/00
DATE
Chester J. Spang
CHIEF SIGNS AND MARKING ENGINEER
FHWA

S.D.D. 15 C 8-96

S.D.D. 15 C 8-96

TWO-LANE ROADWAY

SYMBOLS

WORK AREA

FLAGGER, EQUIPPED WITH STOP/SLOW PADDLE FASTENED ON SUPPORT STAFF

SIGN ON PORTABLE OR PERMANENT SUPPORT

USE OF THE "BE PREPARED TO STOP" SIGN IS OPTIONAL. WHEN USED, THIS SIGN SHALL BE LOCATED BETWEEN THE W20-7a AND W20-4 SIGNS. A 500' TYPICAL SPACING SHALL BE PROVIDED BETWEEN THE SIGNS.

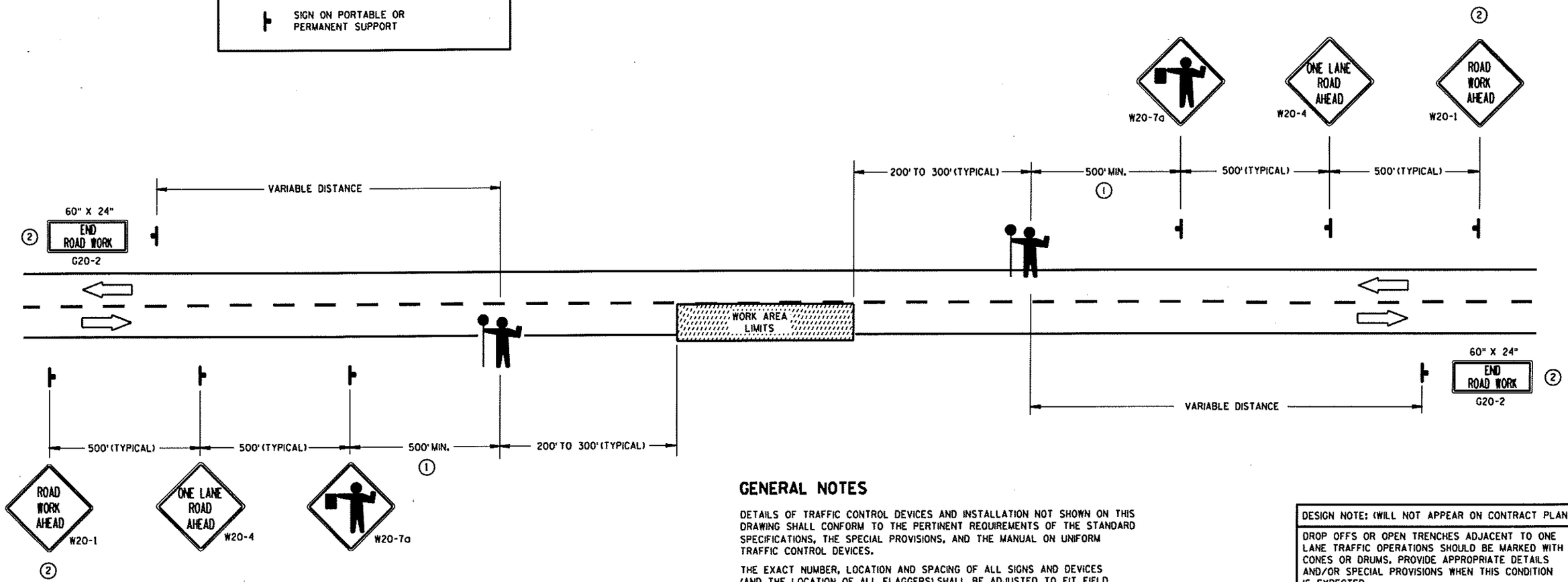

① FOR A MOVING WORK OPERATION, SIGNING FOR BOTH DIRECTIONS SHALL BE REESTABLISHED (AS SIMULTANEOUSLY AS PRACTICAL) AT APPROXIMATELY 3500 FOOT INTERVALS IN THE MOVING WORK OPERATION OR AS DIRECTED BY THE ENGINEER.

② SIGN NOT REQUIRED IF FLAGGING OPERATION OCCURS WITHIN A SIGNED ROAD WORK ZONE AREA.

GENERAL NOTES

DETAILS OF TRAFFIC CONTROL DEVICES AND INSTALLATION NOT SHOWN ON THIS DRAWING SHALL CONFORM TO THE PERTINENT REQUIREMENTS OF THE STANDARD SPECIFICATIONS, THE SPECIAL PROVISIONS, AND THE MANUAL ON UNIFORM TRAFFIC CONTROL DEVICES.

THE EXACT NUMBER, LOCATION AND SPACING OF ALL SIGNS AND DEVICES (AND THE LOCATION OF ALL FLAGGERS) SHALL BE ADJUSTED TO FIT FIELD CONDITIONS AS DIRECTED BY THE ENGINEER.

THE FIRST ADVANCE WARNING SIGN SHOULD TYPICALLY BE LOCATED IN ADVANCE OF THE ANTICIPATED TRAFFIC BACKUP OR QUEUE.

WHEN A SIDE ROAD OR RAMP INTERSECTS THE FACILITY ON WHICH THE WORK IS BEING PERFORMED, ADDITIONAL TRAFFIC CONTROLS SHALL BE PROVIDED AS SPECIFIED IN THE PLANS AND/OR THE SPECIAL PROVISIONS OR AS DIRECTED BY THE ENGINEER.

FLAGGERS SHALL BE IN SIGHT OF EACH OTHER OR IN DIRECT COMMUNICATION AT ALL TIMES. THEY SHALL BE EQUIPPED WITH STOP/SLOW PADDLES FASTENED ON SUPPORT STAFFS. WHEN THE FLAGGING OPERATION IS NOT IN EFFECT, THE "FLAGGER AHEAD", THE "ROAD WORK AHEAD" AND THE ONE LANE ROAD AHEAD" SIGNS SHALL BE COVERED OR REMOVED AND THE HIGHWAY RESTORED TO NORMAL OPERATION.

ALL SIGNS ARE 48" X 48" UNLESS OTHERWISE NOTED.

DESIGN NOTE: (WILL NOT APPEAR ON CONTRACT PLANS)

DROP OFFS OR OPEN TRENCHES ADJACENT TO ONE LANE TRAFFIC OPERATIONS SHOULD BE MARKED WITH CONES OR DRUMS. PROVIDE APPROPRIATE DETAILS AND/OR SPECIAL PROVISIONS WHEN THIS CONDITION IS EXPECTED.

THIS DETAIL IS APPROPRIATE FOR RURAL HIGH SPEED CONDITIONS. URBAN LOWER SPEED CONDITIONS REQUIRE A CLOSER SIGN SPACING.

TRAFFIC CONTROL FOR LANE CLOSURE (SUITABLE FOR MOVING OPERATIONS)

STATE OF WISCONSIN
DEPARTMENT OF TRANSPORTATION

APPROVED
2/17/94
DATE
FHWA

STATE TRAFFIC ENGINEER FOR HWYS

S.D.D. 15 C 12-2

S.D.D. 15 C 12-2

LEGEND

- POST WITH ATTACHED SIGN
- POST WITH ATTACHED SIGN IN DRUM
- DRUM WITH WARNING LIGHT (TYPE C)
- DRUM
- ARROW BOARD
- 8' TYPE III BARRICADE
- REMOVING PAVEMENT MARKING
- DIRECTION OF TRAFFIC

GENERAL NOTES :

THE EXACT NUMBER, LOCATION, AND SPACING OF ALL SIGNS AND DEVICES SHALL BE ADJUSTED TO FIT FIELD CONDITIONS AS APPROVED BY THE ENGINEER.

THE SPACING BETWEEN SIGNS SHOULD BE ADJUSTED TO NOT CONFLICT WITH AND TO PROVIDE A MINIMUM OF 200 FEET, (500 FEET DESIREABLE) DISTANCE TO EXISTING SIGNS.

THIS LANE CLOSURE IS TYPICAL FOR CLOSING RIGHT LANE - REVERSE FOR CLOSING LEFT LANE.

ALL SIGNS ARE 48"x48" UNLESS OTHERWISE NOTED.

"WO" IS THE SAME AS "W" EXCEPT THE BACKGROUND IS ORANGE.

ANY SIGNS TEMPORARY OR EXISTING, WHICH CONFLICT WITH TRAFFIC CONTROL "IN USE" SHALL BE REMOVED OR COVERED AS NEEDED AND AS APPROVED BY THE ENGINEER. NO WARNING LIGHTS SHALL BE WORKING ON "COVERED" OR "DOWNED" SIGNS.

① CONSIDER GEOMETRICS WHEN LOCATING SIGNS AND ARROW BOARD SO THE DRIVER HAS A CLEAR VIEW OF THE ARROW BOARD AND LANE CLOSURE DRUMS FOR A MINIMUM 1500 FEET IN FRONT OF DRUMS.

FOR A LANE CLOSURE THAT IS IN PLACE LESS THAN 7 CONTINUOUS DAYS AND NIGHTS, THE ADVANCED WARNING SIGNS MAY BE MOUNTED ON PORTABLE SUPPORTS.

GENERAL NOTES CONTINUED:

REMOVE PAVEMENT MARKINGS IF LANE CLOSURE IS TO BE IN PLACE FOR LONGER THAN 7 CONTINUOUS DAYS AND NIGHTS.

WARNING LIGHTS ARE NOT REQUIRED IF THE LANE CLOSURE IS A DAYTIME ONLY OPERATION.

IF THE HORIZONTAL ALIGNMENT IS SUCH THAT A CURVE MAY REQUIRE ADDITIONAL DELINEATION, THE DEVICE SPACING MAY BE DECREASED TO 50 FEET.

IF LANE CLOSURE IS MORE THAN 1 MILE, PLACE A TYPE III BARRICADE APPROXIMATELY EVERY 1/4 MILE ACROSS THE CLOSED LANE TO HELP ENFORCE THE DRUM LINE.

ADJUSTMENTS IN BUFFER SPACE NEED TO BE INCORPORATED WHEN THE LANE CLOSURE OCCURS NEAR AN INTERCHANGE EXIT OR ENTRANCE RAMP. THE LANE CLOSURE MUST MUST TAKE PLACE FAR ENOUGH IN ADVANCE OF AN EXIT OR ENTRANCE RAMP TO STILL ALLOW FOR ADEQUATE BUFFER SPACE. THE MINIMUM LENGTH OF THE BUFFER SPACE BEFORE AN EXIT RAMP SHOULD BE 1/2 THE LENGTH OF THE TRANSITION AREA. THE ENTRANCE RAMP SHOULD BE FOLLOWED BY THE ORIGINAL BUFFER SPACE LENGTH OF 800 FEET DESIRABLE PRIOR TO ANOTHER TRAFFIC CONTROL CHANGE SUCH AS A CROSSOVER MANEUVER.

* THE LEFT REVERSE CURVE SIGN (W01-4L) IS ONLY REQUIRED WHEN THIS DETAIL IS USED IN COMBINATION WITH "SINGLE LANE CROSSOVER" DETAIL.

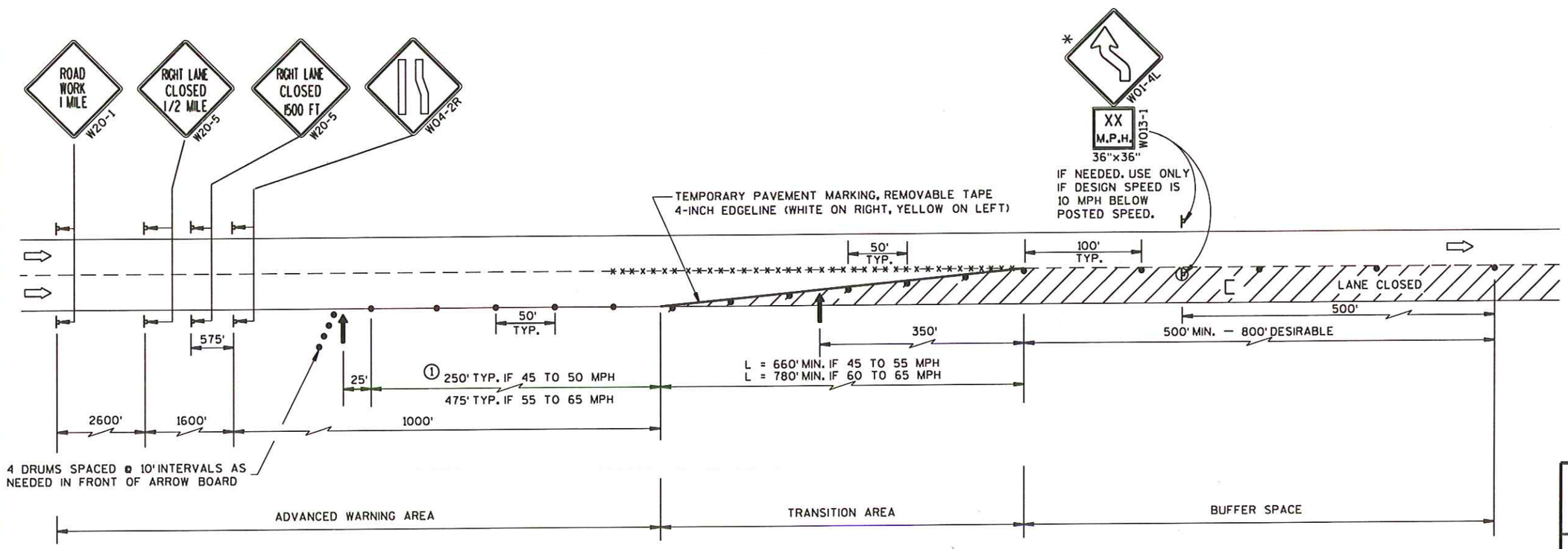

TRAFFIC CONTROL, LANE CLOSURE, SPEEDS GREATER THAN 40 M.P.H.

STATE OF WISCONSIN
DEPARTMENT OF TRANSPORTATION

APPROVED 8-7-95 DATE

Charles J. Spaay for DIRECTOR, OFFICE OF TRAFFIC

FHWA

S.D.D. 15 D 12-2

S.D.D. 15 D 12-2

SYMBOLS

IC/C	TYPE III BARRICADE (8' EQUIVALENT) WITH/WITHOUT SIGN
•	DRUM
⊢	POST MOUNTED SIGN
Ⓐ	WARNING LIGHT, TYPE A (FLASHING)
⇨	DIRECTION OF TRAFFIC

GENERAL NOTES

THIS RAMP CLOSURE DETAIL IS TYPICAL FOR CLOSING A RIGHT SIDE EXIT RAMP. FOR A LEFT SIDE EXIT RAMP, REVERSE THE TRAFFIC CONTROL.

THE EXACT NUMBER, LOCATION, AND SPACING OF ALL SIGNS AND DEVICES SHALL BE ADJUSTED TO FIT FIELD CONDITIONS AS APPROVED BY THE ENGINEER.

THE SPACING BETWEEN TRAFFIC CONTROL SIGNS SHOULD BE ADJUSTED TO NOT CONFLICT WITH AND SHOULD PROVIDE A MINIMUM OF 200 FEET (500 FEET DESIRABLE) CLEARANCE TO EXISTING SIGNS THAT WILL REMAIN IN PLACE.

ALL SIGNS ARE 48" X 48" UNLESS OTHERWISE NOTED.

SIGNS THAT WILL BE IN PLACE LESS THAN 7 CONTINUOUS DAYS AND NIGHTS MAY BE MOUNTED ON PORTABLE SUPPORTS.

ANY SIGNS TEMPORARY OR EXISTING, WHICH CONFLICT WITH TRAFFIC CONTROL "IN USE" SHALL BE REMOVED OR COVERED AS NEEDED AND AS APPROVED BY THE ENGINEER.

PLACE TEMPORARY PAVEMENT MARKING, REMOVABLE TAPE IF RAMP CLOSURE IS TO BE IN PLACE FOR 7 OR MORE CONTINUOUS DAYS AND NIGHTS.

WORK AREAS WITH A DROPOFF ALONG THE EDGE OF AN OPEN TRAVEL LANE SHALL BE LEVELED WITH TEMPORARY FILL WHEN THE CONTRACTOR IS NOT WORKING ADJACENT TO THE TRAVEL LANE. DRUMS SHALL BE PLACED ENTIRELY OUTSIDE THE TRAVEL LANE, ALLOWING THE FULL UNOBSTRUCTED LANE WIDTH, WHEN THE WORK IS NOT IN PROGRESS.

WHERE MEDIAN BARRIER IS IN PLACE, SIGNS SHOWN ON LEFT SIDE OF ROADWAY MAY BE OMITTED FOR RIGHT SIDE RAMP CLOSURES OF LESS THAN 12-HOUR DURATION.

*W20-1 AND G20-2A SIGNS ARE NOT REQUIRED IF THE RAMP CLOSURE IS WITHIN A LARGER WORK ZONE WHERE THESE SIGNS ARE ALREADY PRESENT.

**USE THE "RAMP WILL BE CLOSED" SIGN IF INDICATED IN MISCELLANEOUS QUANTITIES. PLACE 10 CALENDAR DAYS PRIOR TO CLOSURE OR AS DIRECTED BY THE ENGINEER. SEE WISCONSIN STANDARD SIGN PLATES FOR SIGN LAYOUT.

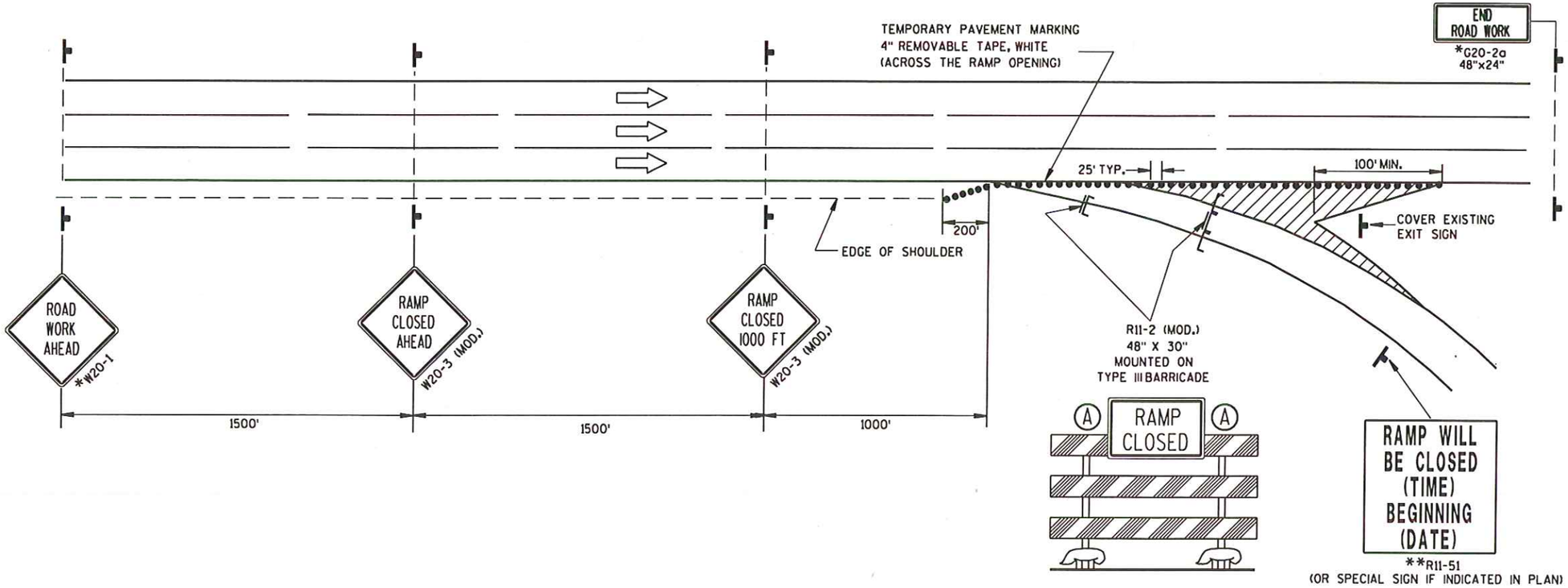

TRAFFIC CONTROL,
EXIT RAMP CLOSURE

STATE OF WISCONSIN
DEPARTMENT OF TRANSPORTATION

APPROVED
5/23/00
DATE

Chester J. Spears
CHIEF SIGNS AND MARKING ENGINEER

FHWA

S.D.D. 15 D 16-1

SYMBOLS

- TRAFFIC CONTROL DRUM
- POST MOUNTED SIGN
- DIRECTION OF TRAFFIC FLOW
- ARROW BOARD IN CAUTION MODE

GENERAL NOTES

THIS DETAIL IS TYPICAL FOR CLOSING THE RIGHT SHOULDER. FOR CLOSING THE LEFT SHOULDER, REVERSE THE TRAFFIC CONTROL.

THIS DETAIL MAY BE USED FOR DIVIDED ROADWAYS WITH ANY NUMBER OF TRAVEL LANES.

THE EXACT NUMBER, LOCATION AND SPACING OF ALL SIGNS AND DEVICES SHALL BE ADJUSTED TO FIT FIELD CONDITIONS AS APPROVED BY THE ENGINEER.

ALL SIGNS ARE 48" X 48" UNLESS OTHERWISE NOTED.

SIGN LAYOUTS SHALL BE IN ACCORDANCE WITH THE FHWA'S MANUAL OF STANDARD HIGHWAY SIGNS OR THE WISCONSIN STANDARD SIGN PLATES.

SIGNS THAT WILL BE IN PLACE LESS THAN 7 CONTINUOUS DAYS AND NIGHTS MAY BE MOUNTED ON PORTABLE SUPPORTS.

ANY SIGNS TEMPORARY OR EXISTING, WHICH CONFLICT WITH TRAFFIC CONTROL "IN USE" SHALL BE REMOVED OR COVERED AS NEEDED AND AS APPROVED BY THE ENGINEER.

CHANNELIZING DEVICES PLACED ADJACENT TO THE WORK AREA SHALL BE PULLED BACK FROM THE TRAVEL LANE WHEN WORK IS NOT IN PROGRESS.

WHEN A RAMP INTERSECTS THE FACILITY ON WHICH THE WORK IS BEING PERFORMED, ADDITIONAL TRAFFIC CONTROLS SHALL BE PROVIDED AS SPECIFIED IN THE PLANS AND/OR THE SPECIAL PROVISIONS OR AS APPROVED BY THE ENGINEER.

*FOR SHORT DURATION SHOULDER WORK OF LESS THAN ONE HOUR, THE W21-5a SIGN MAY BE OMITTED.

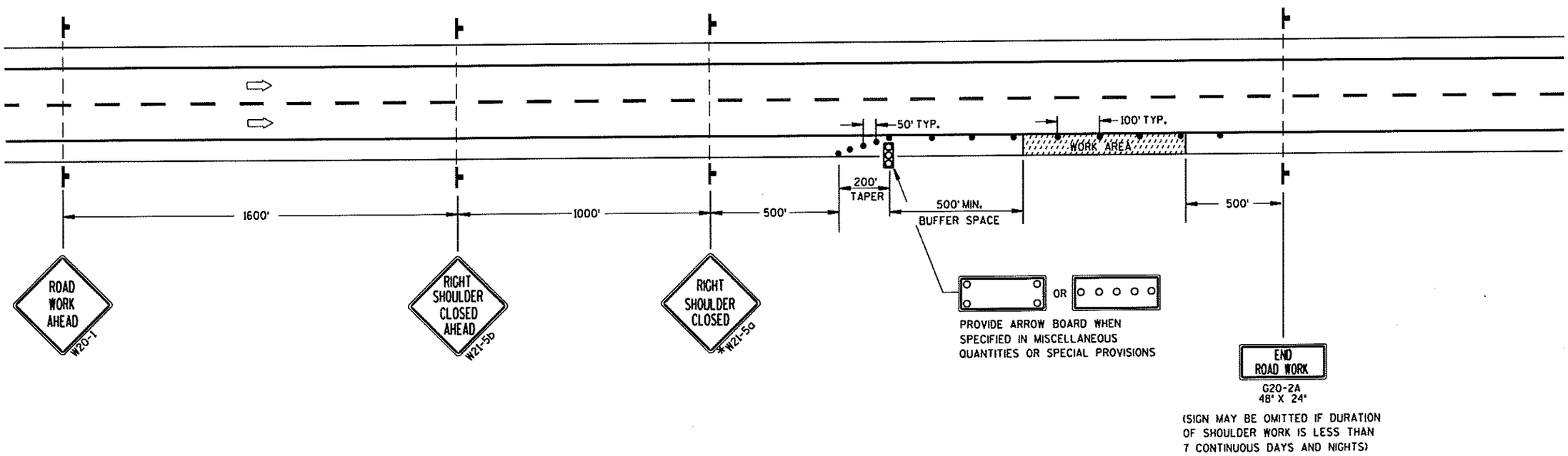

TRAFFIC CONTROL, SHOULDER CLOSURE ON DIVIDED ROADWAY, SPEEDS GREATER THAN 40 MPH	
STATE OF WISCONSIN DEPARTMENT OF TRANSPORTATION	
APPROVED 5/23/00 DATE	Chester J. Sears CHIEF SIGNS AND MARKING ENGINEER
FHWA	

S.D.D. 15 D 27-1

S.D.D. 15 D 27-1

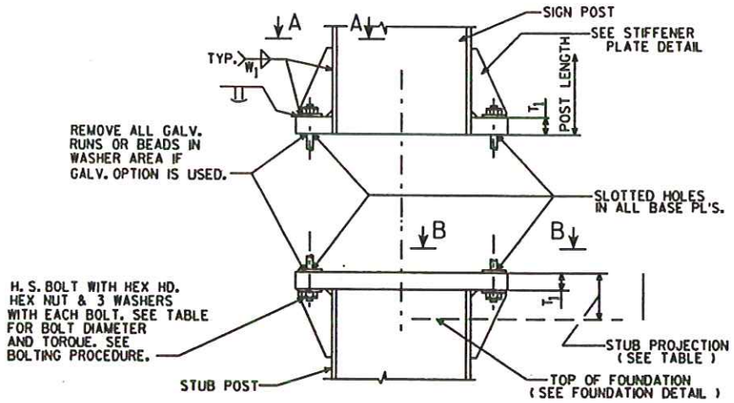

SIGN POST AND STUB POST ELEVATION

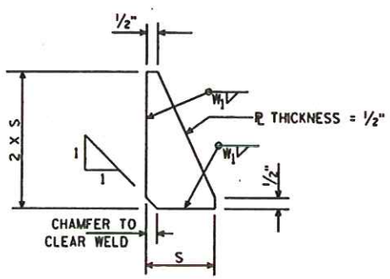

STIFFENER PLATE DETAIL

(SEE TABLE FOR DIMENSIONS)

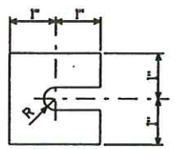

FURNISH 2 @ .012" ± THICK AND 2 @ .032" ± THICK SHIMS PER POST. SHIMS SHALL BE FABRICATED FROM BRASS SHIM STOCK OR STRIP CONFORMING TO A.S.T.M.- B36.

SHIM DETAIL

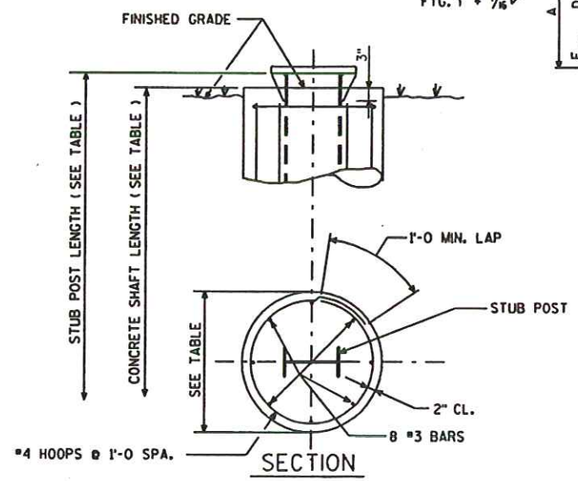

SECTION

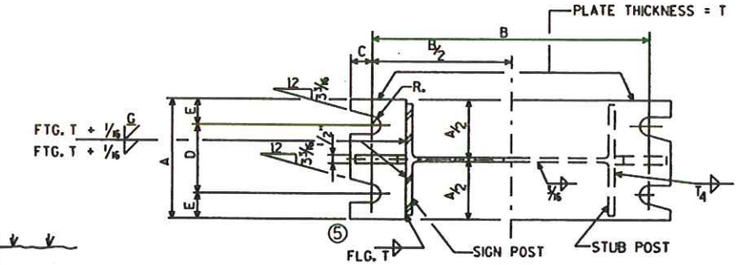

SECTION A-A SECTION B-B

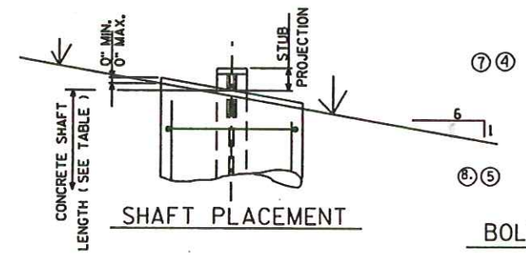

SHAFT PLACEMENT

DESIGN DATA

WIND PRESSURE = 75 M.P.H.
WIND COMPONENTS - NORMAL = 1.0 TRANSVERSE = 0.0
ICE LOAD = 3 P.S.F.

GROUP LOADS	PERCENT OF ALLOWABLE STRESS
1. DEAD	100
2. DEAD & WIND	140
3. DEAD, ICE & 1/2 WIND△	140 △25 P.S.F. MIN.

ALLOWABLE SOIL PRESSURE = 1 1/2 T / SQ. FT.
WIND LOAD WAS APPLIED TO THE AREA OF THE SIGN AND TO THE SUPPORTING MEMBERS.
ICE LOAD WAS APPLIED TO ONE FACE OF THE SIGN AND AROUND THE SURFACE OF THE SUPPORTING MEMBERS.

GENERAL NOTES

DRAWINGS SHALL NOT BE SCALED.
DESIGN CONFORMS WITH A.A.S.H.T.O. SPECIFICATIONS 1985.
ALL POSTS, POST STUBS & ATTACHMENTS SHALL BE A.S.T.M. A709 GRADE 50, EXCEPT WHERE CONTRACT REQUIRES A.S.T.M. A709 GRADE 50 W.
IF A709 GRADE 50 MATERIAL IS USED, THE POST, BASE PLATES, UPPER SIX INCHES OF STUB POST, FLANGE SPLICE PLATE AND FUSE PLATE SHALL BE GALVANIZED AFTER FABRICATION.
H.S. BOLTS, WASHERS & NUTS SHALL BE A325 GALVANIZED WHEN POSTS, POST STUBS AND ATTACHMENTS ARE A709 GRADE 50 AND GALVANIZED.
H. S. BOLTS, WASHERS & NUTS SHALL BE A325 TYPE 3 NOT GALVANIZED WHEN CONTRACT REQUIRES A709 GRADE 50 W POSTS, POSTS STUBS AND ATTACHMENTS.

BOLTING PROCEDURE - BASE CONNECTION

1. ASSEMBLE SIGN POST TO STUB POST WITH BOLTS AND ONE OF THE FLAT WASHERS ON EACH BOLT BETW. PLATES.
2. SHIM AS REQ'D. TO PLUMB POST.
3. TIGHTEN ALL BOLTS THE MAXIMUM POSSIBLE WITH 12" OR 15" WRENCH TO BED WASHERS & SHIMS AND TO CLEAN BOLT THREADS, THEN LOOSEN EACH BOLT IN TURN AND RETIGHTEN IN A SYSTEMATIC ORDER TO THE PRESCRIBED TORQUE. (SEE TABLE)
4. BURR THREADS AT JUNCTION WITH NUT USING A CENTER PUNCH TO PREVENT NUT LOOSENING.

NOTE:
TIGHTEN THE HIGH STRENGTH BOLTS TO THE TORQUE SHOWN. DO NOT OVERTIGHTEN.

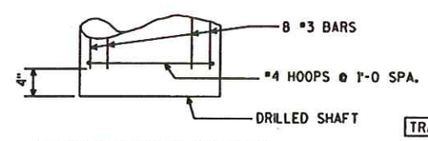

FOUNDATION DETAIL

QUANTITIES FOR 1 FOOTING		
	CONC. MASONRY C.Y.	REINF. STEEL LBS.
A	0.6	34
B	0.8	49
C	0.9	50
D	0.9	56
E	1.0	62

⑦

REINF.	TYPE	#3	#4
	A	8 @ 4'-5	5 @ 6'-3
	B	8 @ 6'-5	7 @ 6'-3
	C	8 @ 6'-11	7 @ 6'-3
	D	8 @ 7'-5	8 @ 6'-3
	E	8 @ 7'-11	9 @ 6'-3

⑦

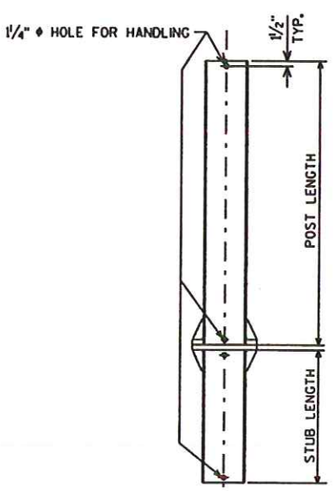

POST DETAIL

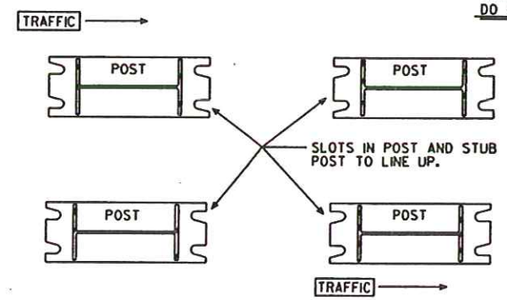

POST SLOT ORIENTATION ⑦

②

	TYPE	POST SIZE \ DIMENSION	BOLT SIZE & TORQUE	A	B	C	D	E	T_1	T_4	W_1	R	S	STUB LENGTH	STUB PROJECTION	SHAFT DIAMETER	SHAFT LENGTH	K	
			BASE CONNECTION DATA TABLE											FOUNDATION DATA					
④	A	W10"X12.0 #/FT.	3/4" ϕ @ 75#-FT.	5 1/4"	1'-0 3/8	7/8"	3 1/2"	7/8"	1"	3/16"	5/16"	13/32"	2 1/8"	3'-6	3"	2'-0 ϕ	5'-0	76.0#	④
④	B	W12"X16.0 #/FT.	7/8" ϕ @ 85#-FT.	5 1/2"	1'-4 1/4	1"	3 1/2"	1"	1 1/4"	1/4"	5/16"	15/32"	3"	5'-6	3"	2'-0 ϕ	7'-0	146.5#	④
	C	W12"X19.0 #/FT.	7/8" ϕ @ 85#-FT.	5 1/2"	1'-4 1/4	1"	3 1/2"	1"	1 1/2"	5/16"	5/16"	15/32"	3"	6'-0	3"	2'-0 ϕ	7'-6	182.1#	
	D	W12"X22.0 #/FT.	7/8" ϕ @ 85#-FT.	5 1/2"	1'-4 1/4	1"	3 1/2"	1"	1 1/2"	3/8"	5/16"	15/32"	3"	6'-6	3"	2'-0 ϕ	8'-0	210.5#	
③	E	W12"X26.0 #/FT.	1" ϕ @ 90#-FT.	7"	1'-4 1/4	1 1/4"	4"	1 1/2"	1 1/2"	3/8"	5/16"	11/32"	3"	7'-0	3"	2'-0 ϕ	8'-6	293.0#	③

① ⑥ ①

STRUCTURAL CARBON STEEL PAY WTS. (1 POST) = K+ (POST LENGTH X POST WT.)
" K " INCLUDES STUB, BASE PLATES, STIFFS., BOLTS, AND WASHERS.

WISCONSIN DEPT OF TRANSPORTATION
APPROVED Charles J Spang for State Traffic Engineer
DATE 8/26/97 PLATE NO. A3-1.12

NO.	DATE	REVISION
⑧	10-30-96	NOT GALVANIZED/GALVANIZED
⑦	10-30-92	QUANT., A588 EXCEPT., ADD SLOT VIEW
⑥	8-24-87	BASE CONN. WELD
⑤	10-13-81	BASE CONN. WELD & FUSE PL WASHERS
④	10-19-79	POST A & B, A572 GR. 50, & K
②	11-28-78	"K" ③ 4-23-79 TYPE "E"
①	5-4-78	T_1, T_2 & W_1

STATE OF WISCONSIN
DEPARTMENT OF TRANSPORTATION
DIVISION OF HIGHWAYS

TYPE A, B, C, D, & E

CONST. SPEC. 1989 | DRAWN BY LOY | PLANS CK'D.

FTG. & SIGN SUPPORT DETAILS GROUND MOUNT BREAK-AWAY SIGNS

SHEET

PROJECT NO: | HWY: | COUNTY:

SHEET NO: 152 E

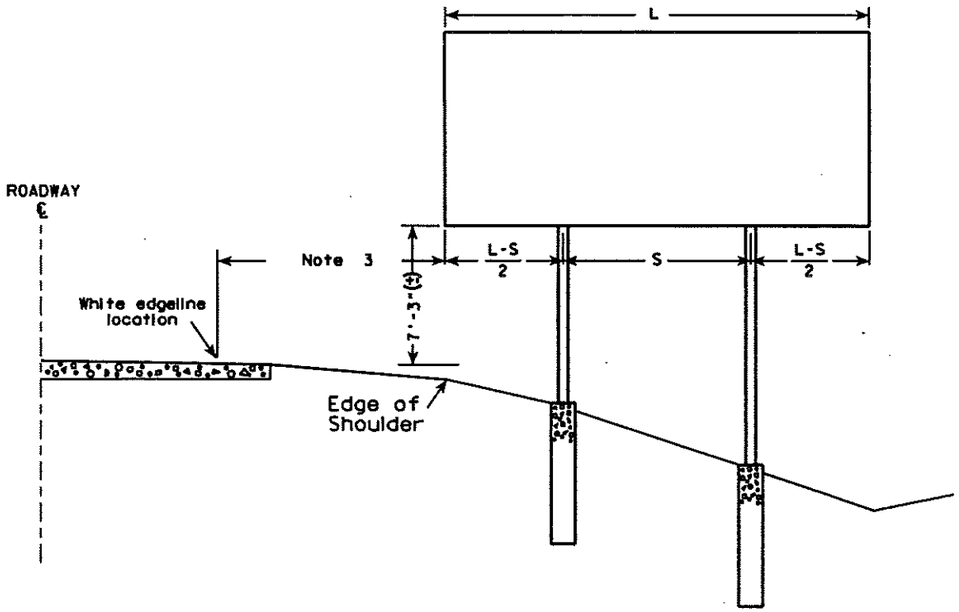

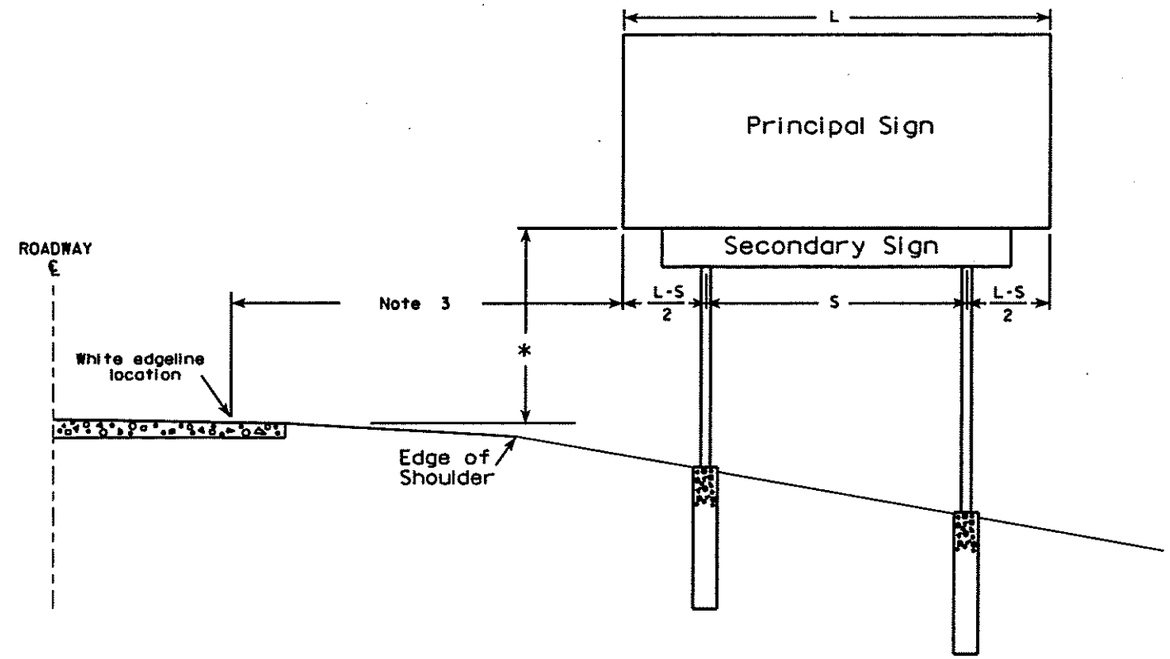

GENERAL NOTES

1. For a 2 post installation, S equals 3L/5, but shall not be less than 9 ft.
2. For a 3 post installation, S equals 5L/7, but shall not be less than 18 ft., and the space between any two posts shall not be less than 9 ft.
3. Unless noted in the plan, the sign offset distance shall be a minimum of 17'-6", desirable 30'-0".
4. The (±) tolerance shown on this sheet is 3 in.
5. The vertical sign height clearance detailed is measured from the bottom of the sign to the near edge of pavement.
6. Refer to the Traffic Guidelines Manual for further guidance on minimum vertical clearance requirements.

* Clearance is 8'-3"(±) when the secondary sign is 3 ft. or less in height. For secondary signs larger than 3 ft., the clearance to the bottom of the secondary sign shall be 5'-3"(±).

TYPICAL INSTALLATION OF TYPE I SIGNS

WISCONSIN DEPT OF TRANSPORTATION

APPROVED Matthew R Rauch
For State Traffic Engineer

DATE 11/18/02 PLATE NO. A4-18

PROJECT NO:				SHEET NO: 153	E

URBAN AREA

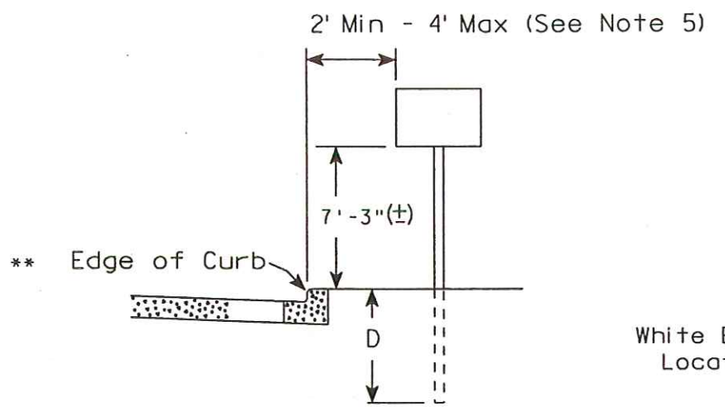

RURAL AREA (See Note 2)

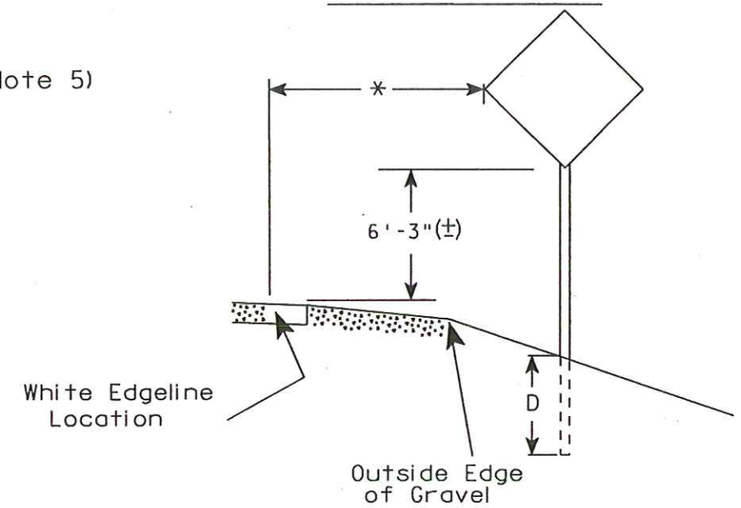

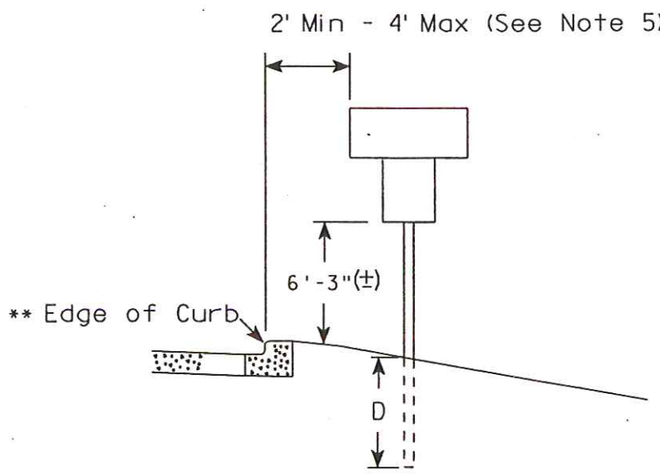

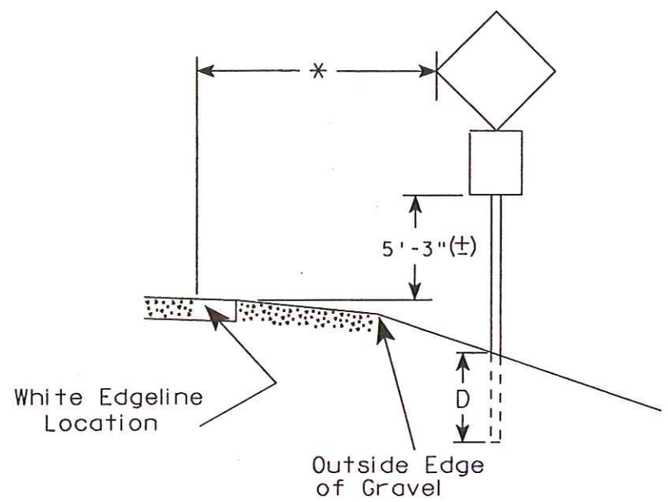

** The existence of curb and gutter does not in itself mandate the vertical clearance illustrated. That height is typically where there is sidewalk adjacent to the roadway or parking is permitted. This same criteria applies to mountable curb as well and measurement shall be taken from flow line.

* 6 feet from edge of a paved shoulder or 12 feet from the edge of pavement (edge line location) or 2 feet from outside edge of gravel, whichever is greater unless directed by project engineer.

GENERAL NOTES

1. Signs wider than 4 feet or larger than 20 sq. ft. shall be mounted on multiple posts. Refer to plate A4-4.
2. For expressways and freeways, mounting height is 7'- 3" (±) or 6'-3" (±) depending upon existence of a sub-sign.
3. Minimum mounting height for J assemblies (A4-5) is 7'-3" (±) or 6'-3" (±) per urban or rural detail respectively.
4. Minimum mounting height for signs mounted on traffic signal poles is 5'- 3" (±).
5. Offset distance shall be consistent with existing signs or consistent throughout length of project.
6. The (±) tolerance for mounting height is 3 inches.
7. Folding stop signs (R1-1F) shall be mounted at a height of 5'-3" (±) or as directed by the Engineer.
8. The Double Arrow sign (W12-1) shall be mounted at a height of 2'-3" (±). The Chevron sign (W1-8), Roundabout Chevron panel (W1-8A), Clearance Markers (W5-52), Mile Markers (D10 series) & End of Road Markers (W5-56 & W5-56A) shall be mounted at a height of 4'-3" (±).

POST EMBEDMENT DEPTH

Area of Sign Installation (Sq. Ft.)	D (Min)
20 or Less	4'
Greater than 20	5'

TYPICAL INSTALLATION OF PERMANENT TYPE II SIGNS ON SINGLE POSTS

WISCONSIN DEPT OF TRANSPORTATION

APPROVED Matthew R Rauch for State Traffic Engineer

DATE 10/25/05 PLATE NO. A4-3.13

PROJECT NO:	HWY:	COUNTY:		SHEET NO: 154	E

URBAN AREA

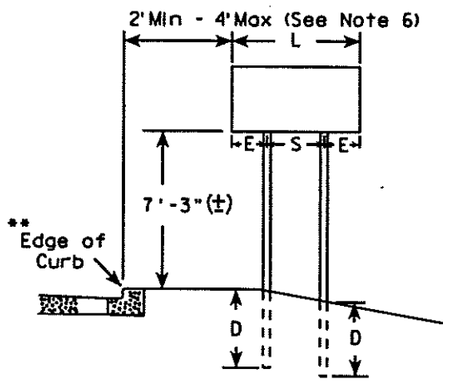

RURAL AREA (See Note 3)

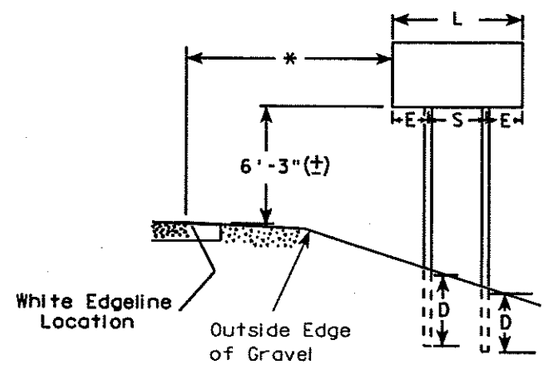

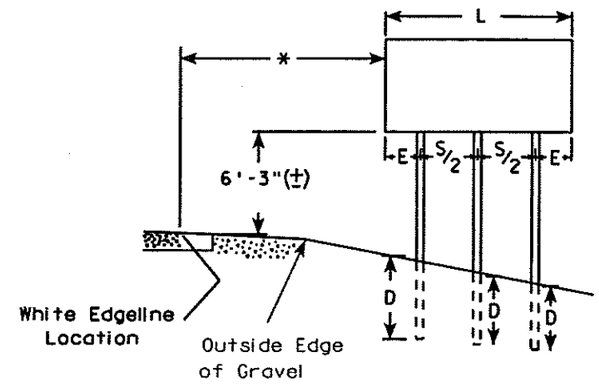

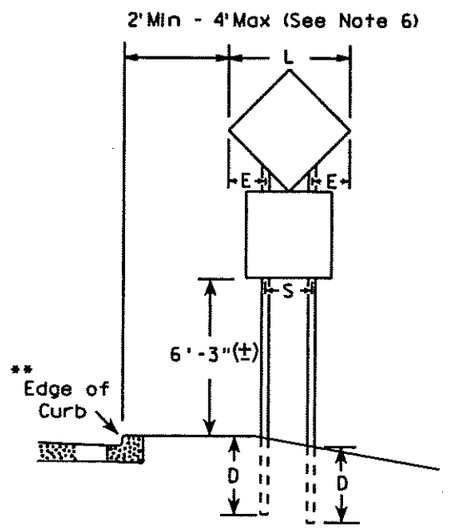

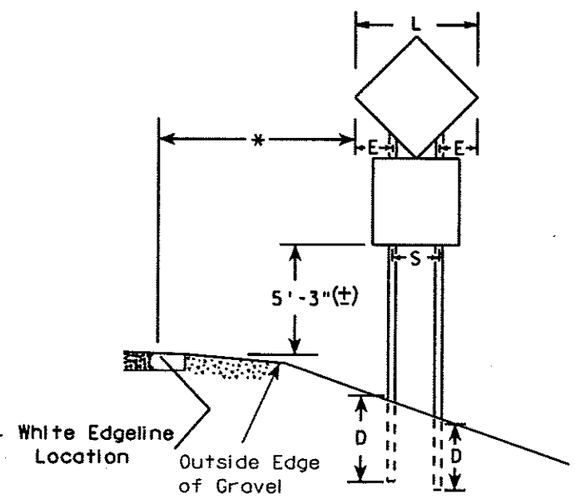

GENERAL NOTES

1. For 3 post installations, spacing is S/2 and S must be greater than 7'-0".
2. For 4 post installations, spacing is S/3 and S must be greater than 10'-6".
3. For expressways and freeways, mounting height is 7'-3" (±) or 6'-3" (±) depending upon existence of sub-sign.
4. The (±) tolerance for mounting height is 3 inches.
5. Minimum mounting height for J assemblies (A4-5) is 7'-3" (±) or 6'-3" (±) per urban or rural detail respectively.
6. Offset distance shall be consistent with existing signs or consistent throughout length of project.
7. Folding stop signs (R1-1F) shall be mounted at a height of 5'-3" (±) or as directed by the engineer.
8. The Double Arrow sign (W12-1) shall be mounted at a height of 2'-3" (±). The Chevron sign (W1-8), Roundabout Chevron panel (W1-8A), Clearance Markers (W5-52), Mile Markers (D10 series) & End of Road Markers (W5-56 & W5-56A) shall be mounted at a height of 4"-3" (±).

* 6 feet from edge of a paved shoulder or 12 feet from the edge of pavement (edge line location) or 2 feet from outside edge of gravel, whichever is greater unless directed by project engineer.

** The existence of curb and gutter does not in itself mandate the vertical clearance illustrated. That height is typically where there is sidewalk adjacent to the roadway or parking is permitted. This same criteria applies to mountable curb as well and measurement shall be from the flow line.

DIAMOND SHAPED SIGNS		
L	S	E
Less than 60"	20"	L/2 - 10
60"--72"	32"	L/2 - 16
Greater than 72"	3 L/5	L/5

SIGN SHAPE OTHER THAN DIAMOND (Two Post Installations)		
L	S	E
Less than 60"	L-24"	12"
60" or more	3 L/5	L/5

POST EMBEDMENT DEPTH

Area of Sign Installation (Sq. Ft.)	D (Min)
20 or Less	4'
Greater than 20	5'

TYPICAL INSTALLATION OF TYPE II SIGNS ON MULTIPLE POSTS

WISCONSIN DEPT OF TRANSPORTATION

APPROVED Matthew R Rauch
for State Traffic Engineer

DATE 10/17/05 PLATE NO. A4-4.8

7

7

PROJECT NO: | HWY: | COUNTY: | SHEET NO: 155 E

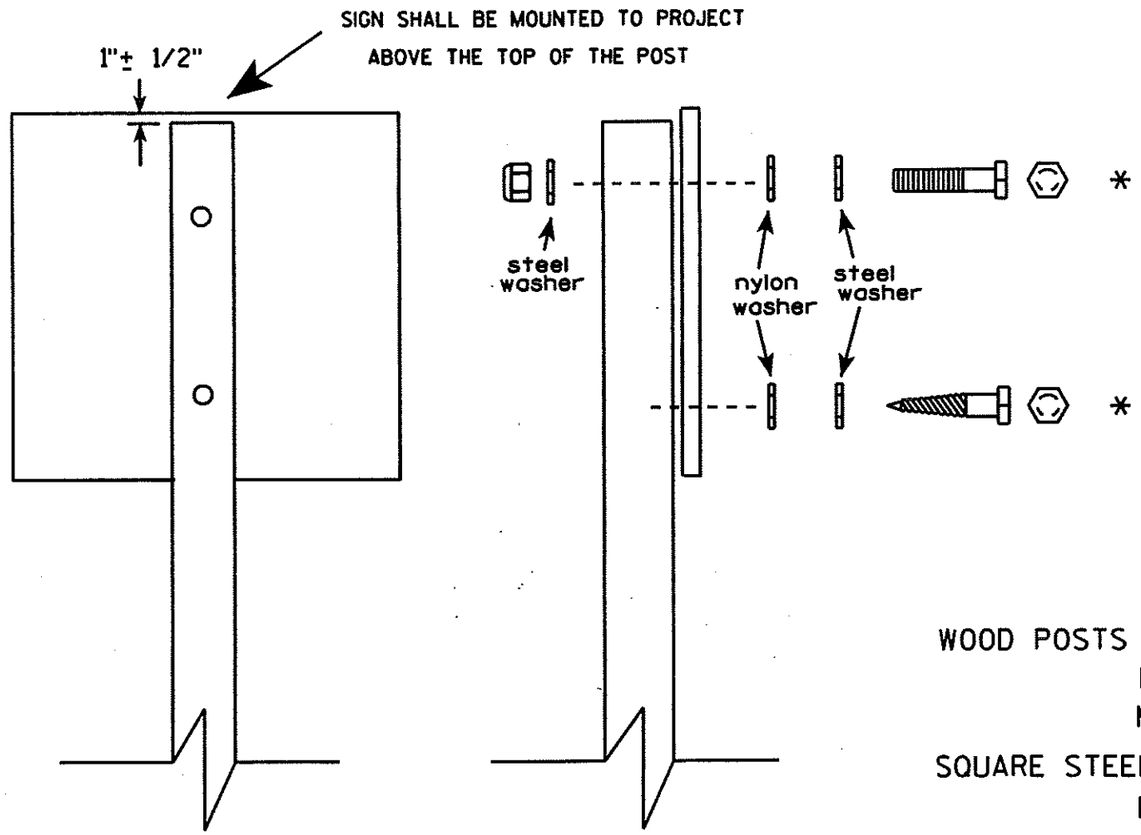

Nuts, bolts and lags used for mounting signs shall have hexagonal heads and shall be either :

a. Hot dip or mechanically galvanized in accordance with ASTM Designation: A 153, Class D, or
b. Cadmium plated in accordance with ASTM Designation : B 766 TYPE 3, Class 12, or
c. Electro-galvanized in accordance with ASTM Designation : B 633, TYPE III, SC 3.

Threads on bolts and nuts shall be manufactured with sufficient allowance for the cadmium plate or galvanized coating to permit the nuts to run freely on the bolts.

WOOD POSTS (4" x 4" or 4" x 6")
LAG SCREWS - 3/8" X 3"
MACHINE BOLTS - 5/16" X 6-1/2" or 7" Length w/ nuts

SQUARE STEEL POSTS (2" x 2")
MACHINE BOLTS - 3/8" X 3-1/4" Length w/ nuts

WASHERS (ALL POSTS) -
1-1/4" O.D. X 3/8" I.D. X 1/16" STEEL
1-1/4" O.D. X 3/8" I.D. X .080 NYLON for all Type H signs.

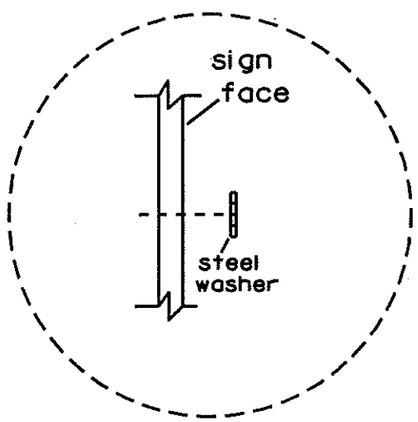

Washer Placement when Sign Has Other Than Type H or Type F Face

* Two different fastening systems are shown for illustration purposes. On any individual sign, either one or the other system shall be used. Actual number of fasteners per sign varies with the sign area, but normally there are two. For a single post installation, all signs 9 sq. ft. or larger require the use of 3 fasteners.

ATTACHMENT OF SIGNS TO POSTS

WISCONSIN DEPT OF TRANSPORTATION

APPROVED Chester J Spange for State Traffic Engineer

DATE 4/03/02 PLATE NO. A4-8.5

STATE PROJECT NUMBER:	HWY:	COUNTY:			SHEET NO: 156 E

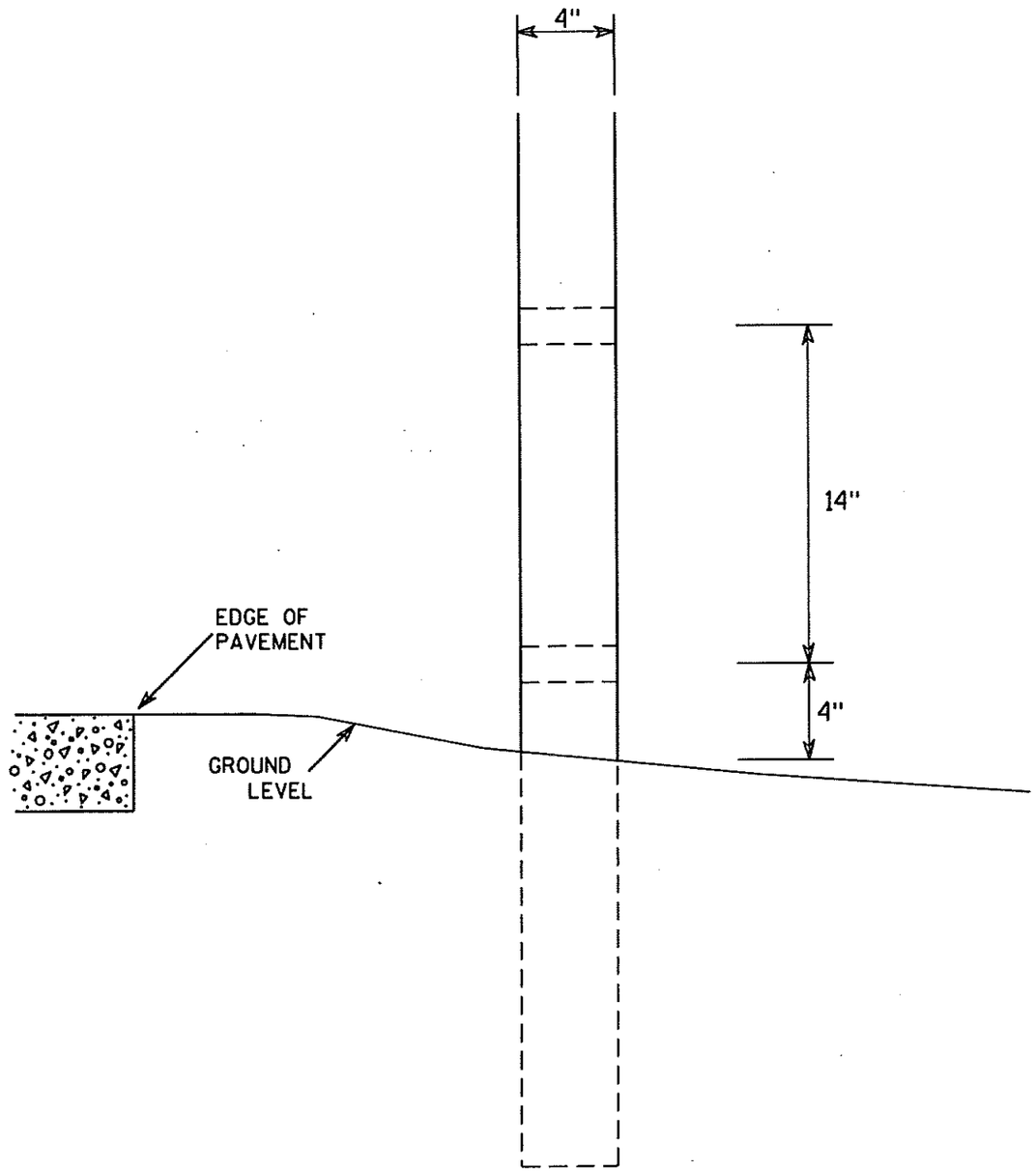

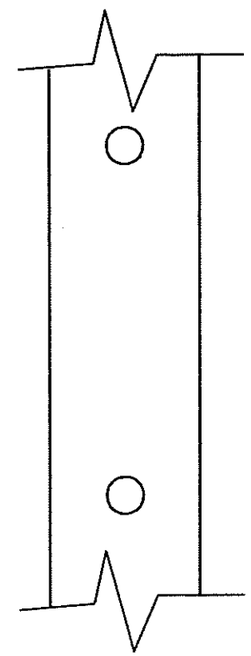

SIDE VIEW

GENERAL NOTES

1. All 4 x 6 Wood Posts shall be modified by having two 1½" diameter holes drilled perpendicular to the roadway centerline.

7

7

4 X 6 WOOD POST MODIFICATIONS

WISCONSIN DEPT OF TRANSPORTATION

APPROVED Chester J Spang for State Traffic Engineer

DATE 3/27/97 PLATE NO. A4-11.2

PROJECT NO:	HWY:	COUNTY:		SHEET NO: 157	E

Extruded Shape

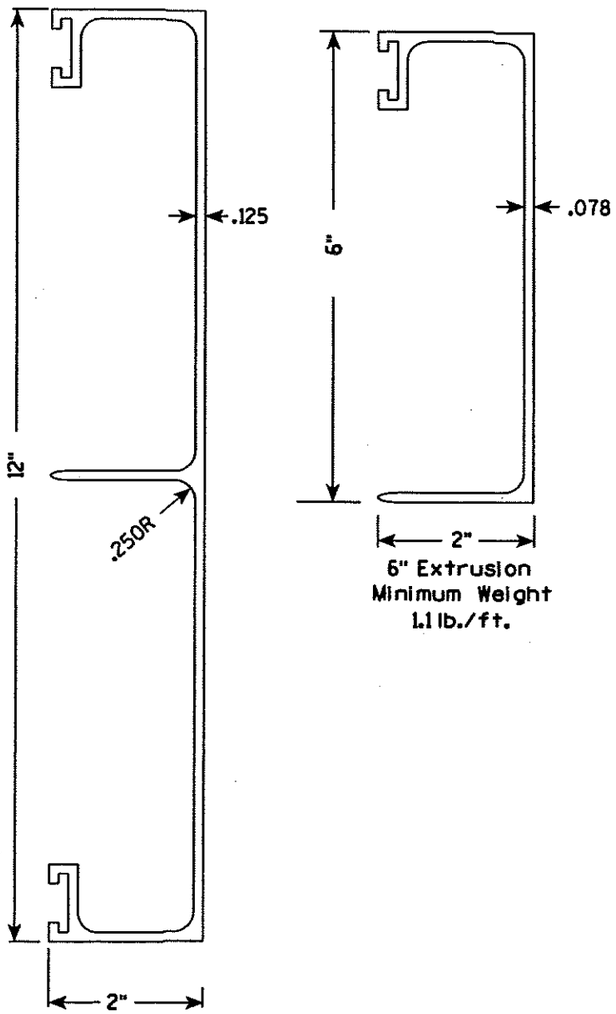

6" Extrusion
Minimum Weight
1.1 lb./ft.

12" Extrusion
Minimum Weight
2.45 lb./ft.

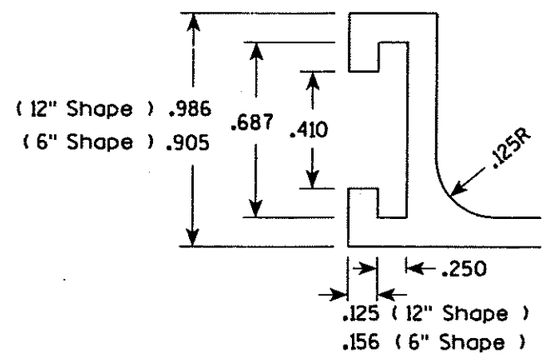

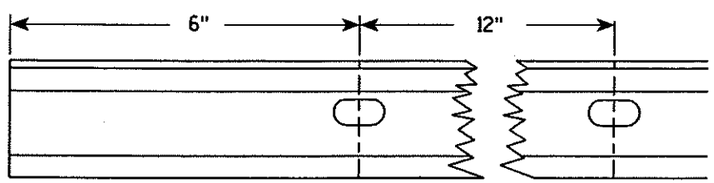

Punch 7/16" x 7/8" oval holes beginning 6" in from end of extrusion 12" CC on both edges of 6" and 12" panels.

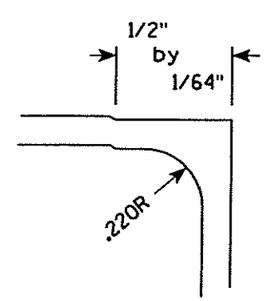

Hardware

STITCH BOLT, WASHER & NUT

The hardware includes:

3/8 " - 16 X 3/4 " Economy Bolt 2024-T4 alloy
3/8 " - Stainless steel stop nut
3/8" X .064 Flat Washers, Alclad 2024-T4 alloy

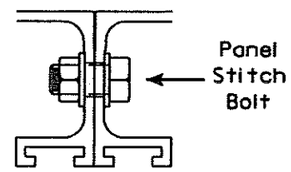

POST CLIP, POST CLIP BOLT, WASHER & NUT

Post Clip shall be Alum. Alloy 356-T6
Post Clip Bolt shall be Stainless Steel.
Flat washer shall be 3/8" X .091, Stainless Steel.
Stop nut shall be stainless steel.

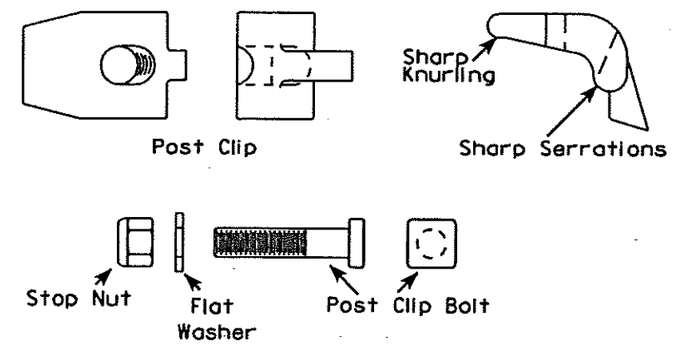

NOTES

1. The contractor may select any brand of extrusion that conforms to the illustrations or meets with the approval of the engineer, but all extrusions used on this contract shall be of the same brand.
2. Panel Stitch Bolts shall be used to assemble adjacent panels. Maximum stitch bolt spacing shall be 24" C-C, and a minimum of 4 bolts shall be used to connect any two extrusions.
3. Post Clips shall be used to attach the sign panel to the sign support.

7

7

ALUMINUM EXTRUSIONS FOR TYPE I SIGNS

WISCONSIN DEPT OF TRANSPORTATION

APPROVED Chester J Spang for State Traffic Engineer

DATE 11/18/99 PLATE NO. A5-2.9

PROJECT NO:

SHEET NO: 158 E

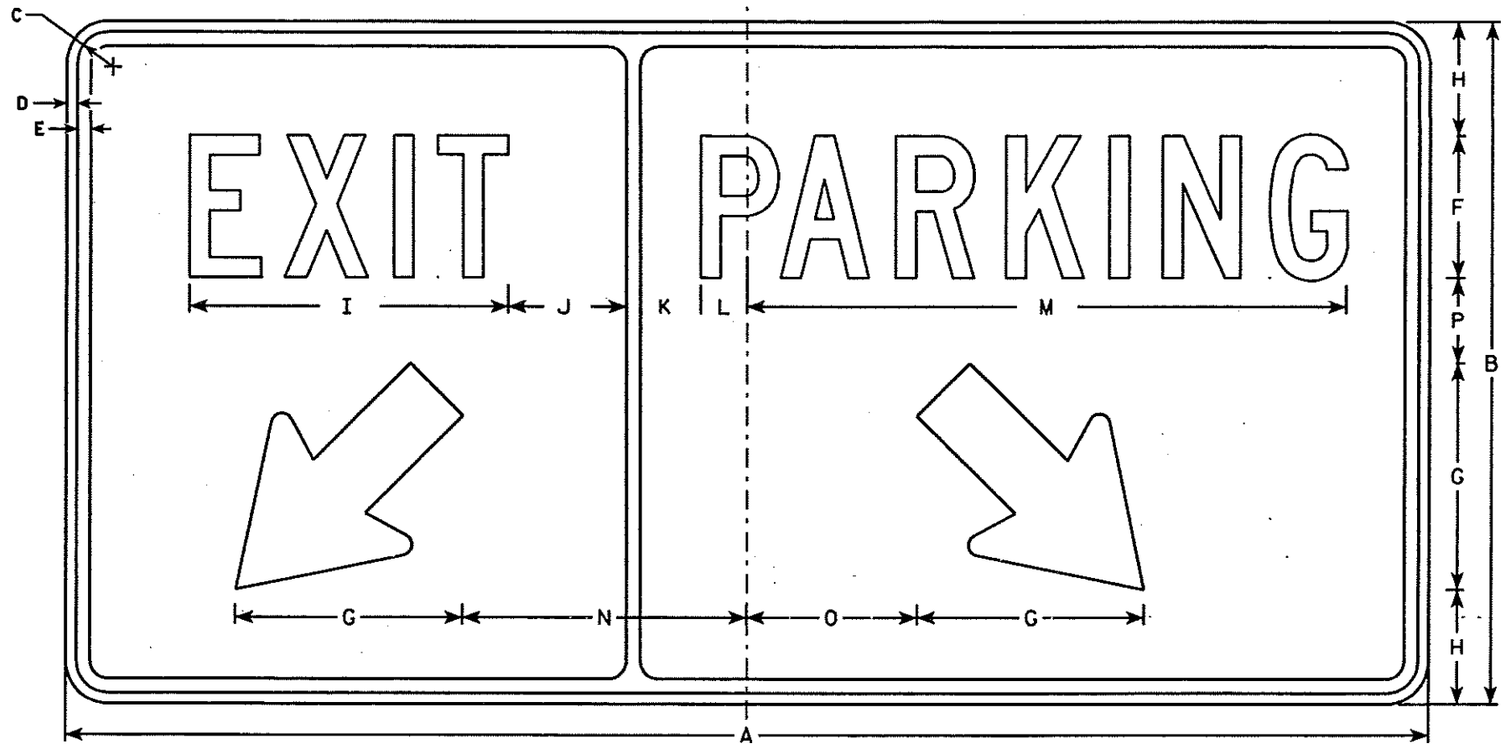

D52-58

NOTES

1. All Signs Type II - Type H Reflective - reference WIS DOT Standard Specification for HIGHWAY and STRUCTURE CONSTRUCTION latest edition.
2. Color:
   Background - White
   Message - Black
3. Message Series - C
4. Corners may be squared or rounded when base material is plywood but borders shall be rounded as shown. When base material is metal the corners and borders shall be rounded.

7

Metric equivalent for this sign is:

SIZE	
1	
2	1200 mm X 600 mm
3	
4	
5	

SIZE	A	B	C	D	E	F	G	H	I	J	K	L	M	N	O	P	Q	R	S	T	U	V	W	X	Y	Z	Area sq. ft.	Area m^2
1																												
2	48	24	1 1/8	3/8	1/2	5	8	4	11 1/4	4 1/8	2 5/8	1 5/8	21 1/8	10	6	3											8	.72
3																												
4																												
5																												

STANDARD SIGN
D52-58

WISCONSIN DEPT OF TRANSPORTATION

APPROVED Matthew R Rauch
for State Traffic Engineer

DATE 3/21/06 PLATE NO. D52-58.1

PROJECT NO:	HWY:	COUNTY:		SHEET NO: 159	E

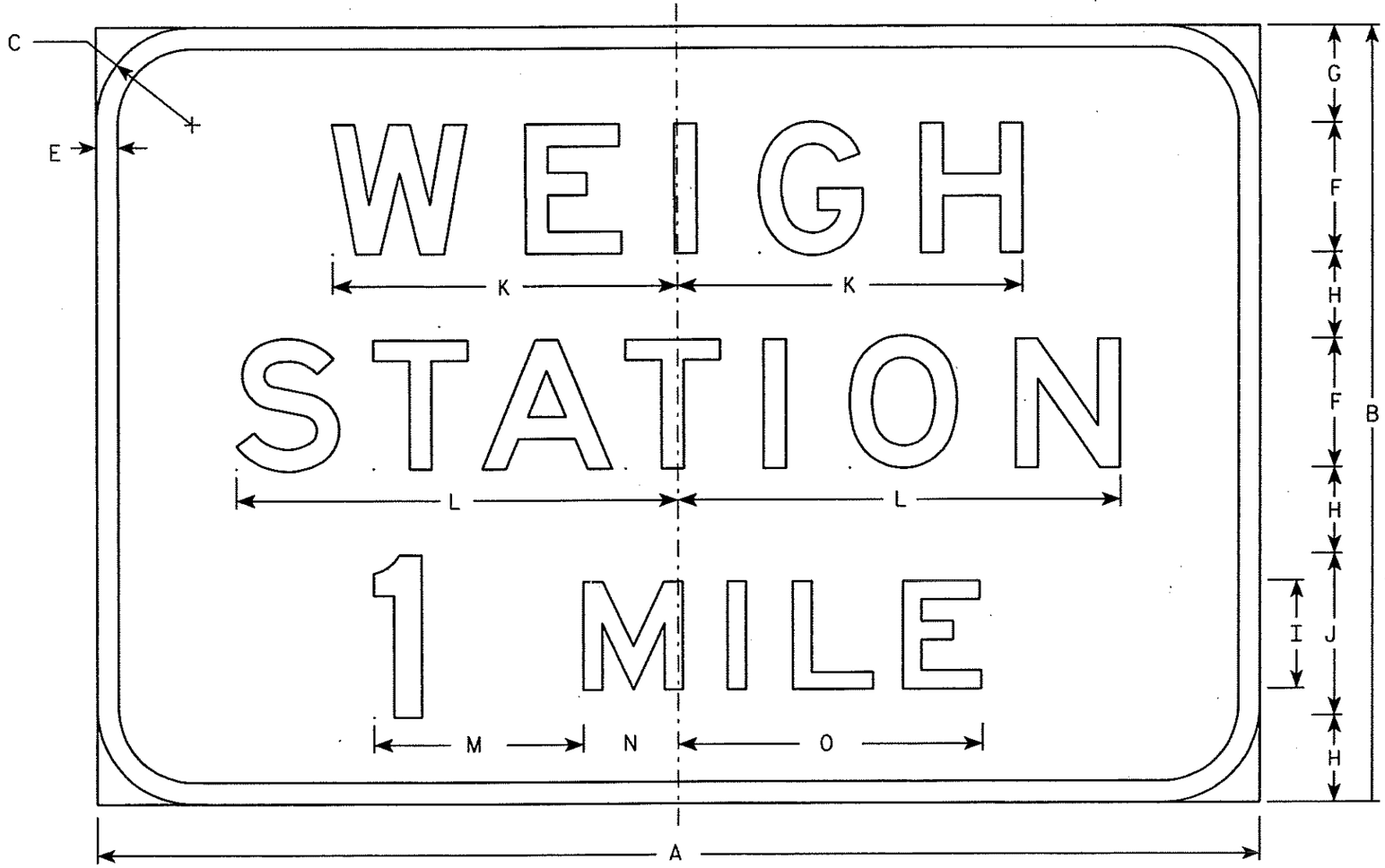

E5-56A

NOTES

1. Sign is Type I- Type H Reflective - reference WIS DOT Standard Specification for HIGHWAY and STRUCTURE CONSTRUCTION latest edition.
2. Color:
   Background - Green
   Message - White
3. Message Series - E

Metric equivalent for this sign is:

SIZE	
1	
2	
3	
4	2700 mm X 1800 mm
5	2700 mm X 1800 mm

SIZE	A	B	C	D	E	F	G	H	I	J	K	L	M	N	O	P	Q	R	S	T	U	V	W	X	Y	Z	Area sq. ft.	Area m^2
1																												
2																												
3																												
4	108	72	9		2	12	9	8	10	15	32	41	19 1/2	8 3/4	28 1/4												54.0	4.86
5	108	72	9		2	12	9	8	10	15	32	41	19 1/2	8 3/4	28 1/4												54.0	4.86

STANDARD SIGN
E5-56A

WISCONSIN DEPT OF TRANSPORTATION

APPROVED Chester J Spang for State Traffic Engineer

DATE 2/20/99 PLATE NO. E5-56A.4

PROJECT NO: | HWY: | COUNTY: | SHEET NO: 160 | E

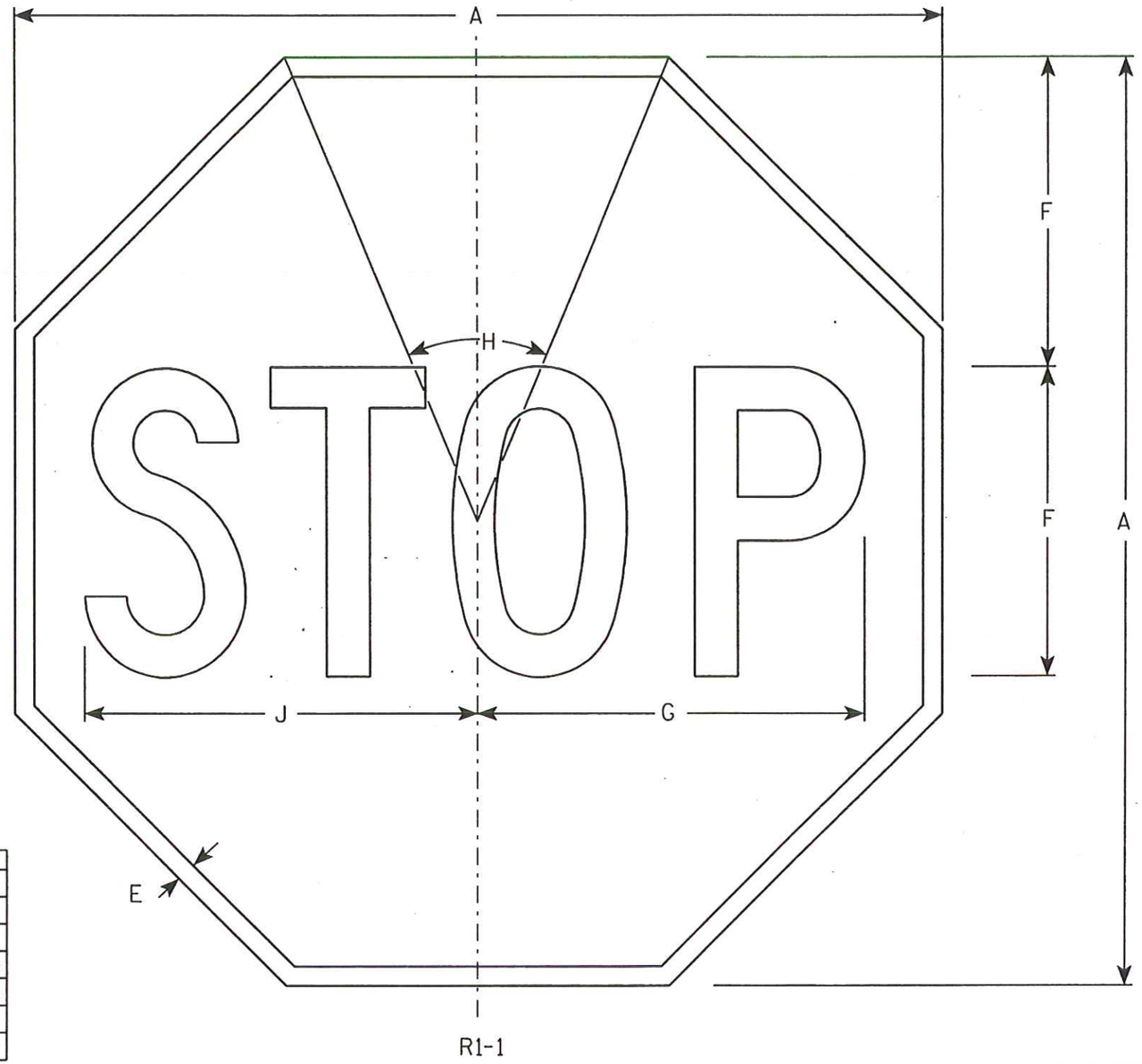

NOTES

1. Sign is Type II - Type H Reflective - reference WIS DOT Standard Specification for HIGHWAY and STRUCTURE CONSTRUCTION latest edition.
2. Color:
   Background - Red
   Message - White
3. Message Series - C

Metric equivalent for this sign is:

SIZE	
1	600 mm X 600 mm
2	750 mm X 750 mm
3	900 mm X 900 mm
4	1200 mm X 1200 mm
5	1200 mm X 1200 mm
6	450 mm X 450 mm
7	300 mm X 300 mm

SIZE	A	B	C	D	E	F	G	H	I	J	K	L	M	N	O	P	Q	R	S	T	U	V	W	X	Y	Z	Area sq. ft.	Area m2
1	24				3/8	8	10	45°		10 1/4																	3.31	0.31
2	30				5/8	10	12 1/2	45°		12 3/4																	5.18	0.48
3	36				3/4	12	15	45°		15 3/8																	7.46	0.69
4	48				1	16	20	45°		20 1/2																	13.25	1.23
5	48				1	16	20	45°		20 1/2																	13.25	1.23
6	18				3/8	6	7 3/4	45°		7 3/4																	1.86	0.17
7	12				1/4	4	5	45°		5 1/8																	0.78	0.07

STANDARD SIGN
R1-1

WISCONSIN DEPT OF TRANSPORTATION

APPROVED Chester J Spang
for State Traffic Engineer

DATE 10/15/98 PLATE NO. R1-1.11

PROJECT NO:	HWY:	COUNTY:		SHEET NO: 161	E

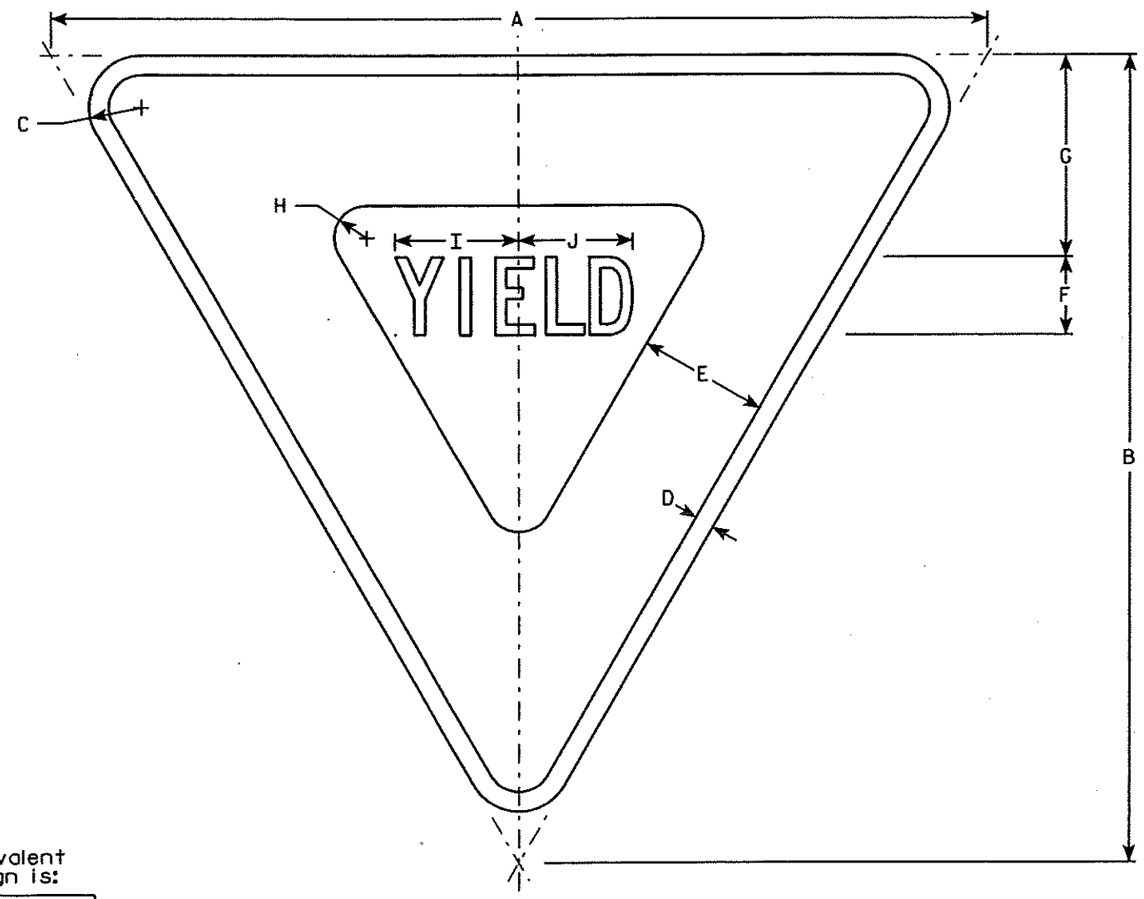

R1-2

NOTES

1. Sign is Type II - Type H Reflective - reference WIS DOT Standard Specification for HIGHWAY and STRUCTURE CONSTRUCTION latest edition.
2. Color:
   Background - White
   Message - See note 5
3. Message Series - C
4. Corners may be square or rounded when base material is plywood but borders shall be rounded as shown. When base material is metal, the corners and borders shall be rounded.
5. The border strip and word message are reflectorized red.

Metric equivalent for this sign is:

SIZE	
1	750 mm X 650 mm
2	900 mm X 775 mm
3	
4	1200 mm X 1050 mm
5	1500 mm X 1300 mm
6	600 mm X 525 mm

SIZE	A	B	C	D	E	F	G	H	I	J	K	L	M	N	O	P	Q	R	S	T	U	V	W	X	Y	Z	Area sq. ft.	Area m²
1	30	26	1 1/2	5/8	4	2 1/2	6 3/8	7/8	4	3 5/8																	2.71	0.24
2	36	31	2	3/4	5	3	7 3/4	1 1/4	4 3/4	4 3/8																	3.88	0.35
3																												
4	48	42	3	1	6	4	9 3/4	2	6 1/4	5 7/8																	7.00	0.63
5	60	52	3	1 1/2	8	5	13	2 1/2	7 7/8	7 1/4																	10.83	0.98
6	24	21	1 1/2	3/8	3	2	4 3/4	7/8	3 1/4	3																	1.75	0.16

STANDARD SIGN
R1-2

WISCONSIN DEPT OF TRANSPORTATION

APPROVED Chester J Spang for State Traffic Engineer

DATE 2/03/98 PLATE NO. R1-2.10

PROJECT NO: | HWY: | COUNTY: | SHEET NO: 162 E

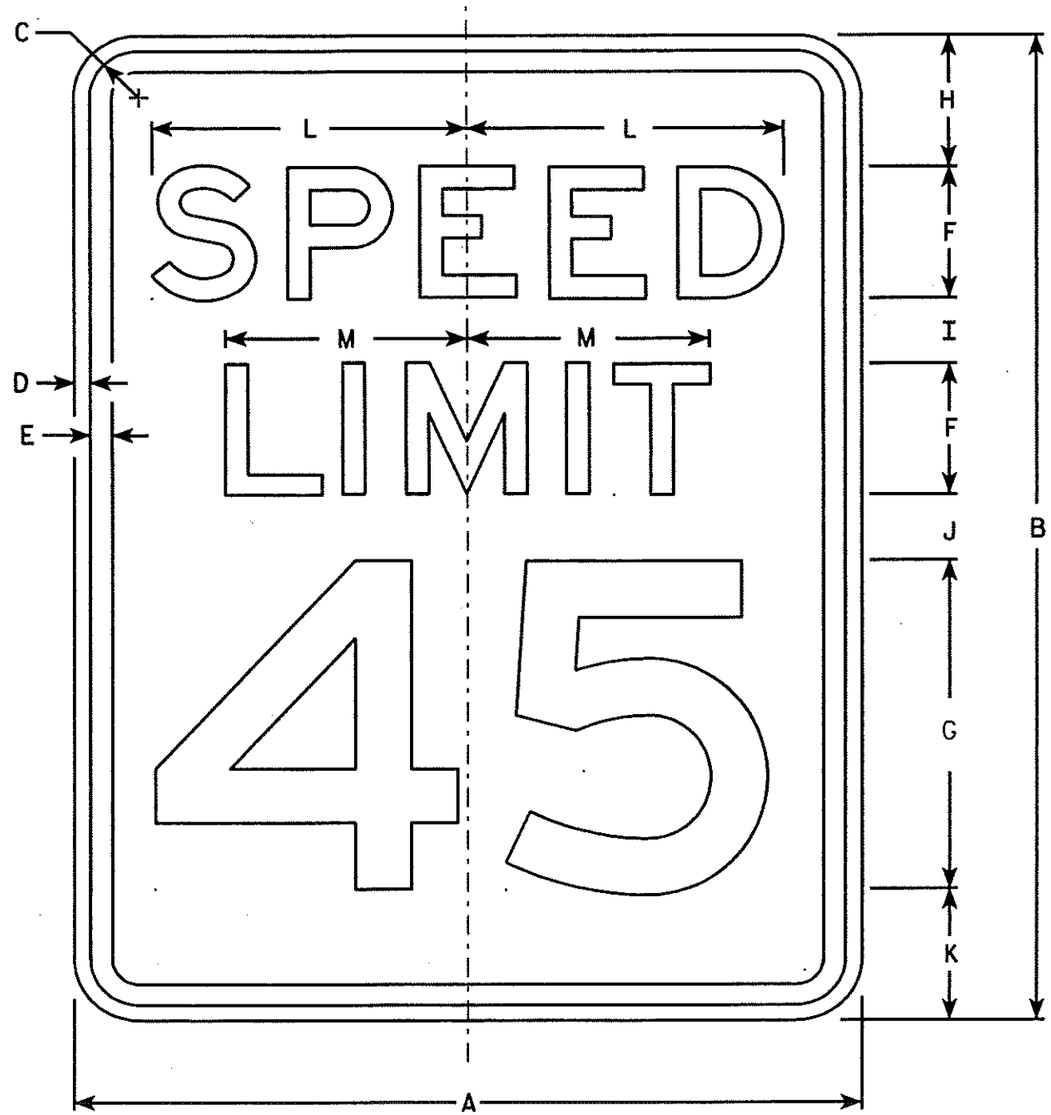

R2-1

NOTES

1. Sign is Type II - Type H Reflective - reference WIS DOT Standard Specification for HIGHWAY and STRUCTURE CONSTRUCTION latest edition.
2. Color:
   Background - White
   Message - Black
3. Message Series - E
4. Corners may be square or rounded when base material is plywood but borders shall be rounded as shown. When base material is metal, the corners and borders shall be rounded.
5. Substitute appropriate numerals and optically adjust spacing to achieve proper balance.

Metric equivalent for this sign is:

SIZE	
1	450 mm X 600 mm
2	600 mm X 750 mm
3	900 mm X 1200 mm
4	900 mm X 1200 mm
5	1200 mm X 1500 mm

SIZE	A	B	C	D	E	F	G	H	I	J	K	L	M	N	O	P	Q	R	S	T	U	V	W	X	Y	Z	Area sq. ft.	Area m^2
1	18	24	1 1/8	3/8	1/2	3	8	3	2	2	3	7 1/4	5 1/2														3.0	.28
2	24	30	1 1/8	3/8	1/2	4	10	3	2 1/4	3 3/8	3 3/8	9 5/8	7 3/8														5.0	.46
3	36	48	1 3/8	1/2	5/8	6	14	6	5	5	6	14 3/8	11														12.0	1.11
4	36	48	1 3/8	1/2	5/8	6	14	6	5	5	6	14 3/8	11														12.0	1.11
5	48	60	2 1/4	3/4	1	8	20	6	4 1/2	6 3/4	6 3/4	19 1/4	14 5/8														20.0	1.86

STANDARD SIGN
R2-1

WISCONSIN DEPT OF TRANSPORTATION

APPROVED Matthew R Rauch
for State Traffic Engineer

DATE 7/05/05 PLATE NO. R2-1.12

PROJECT NO: | HWY: | COUNTY: | SHEET NO: 163 E

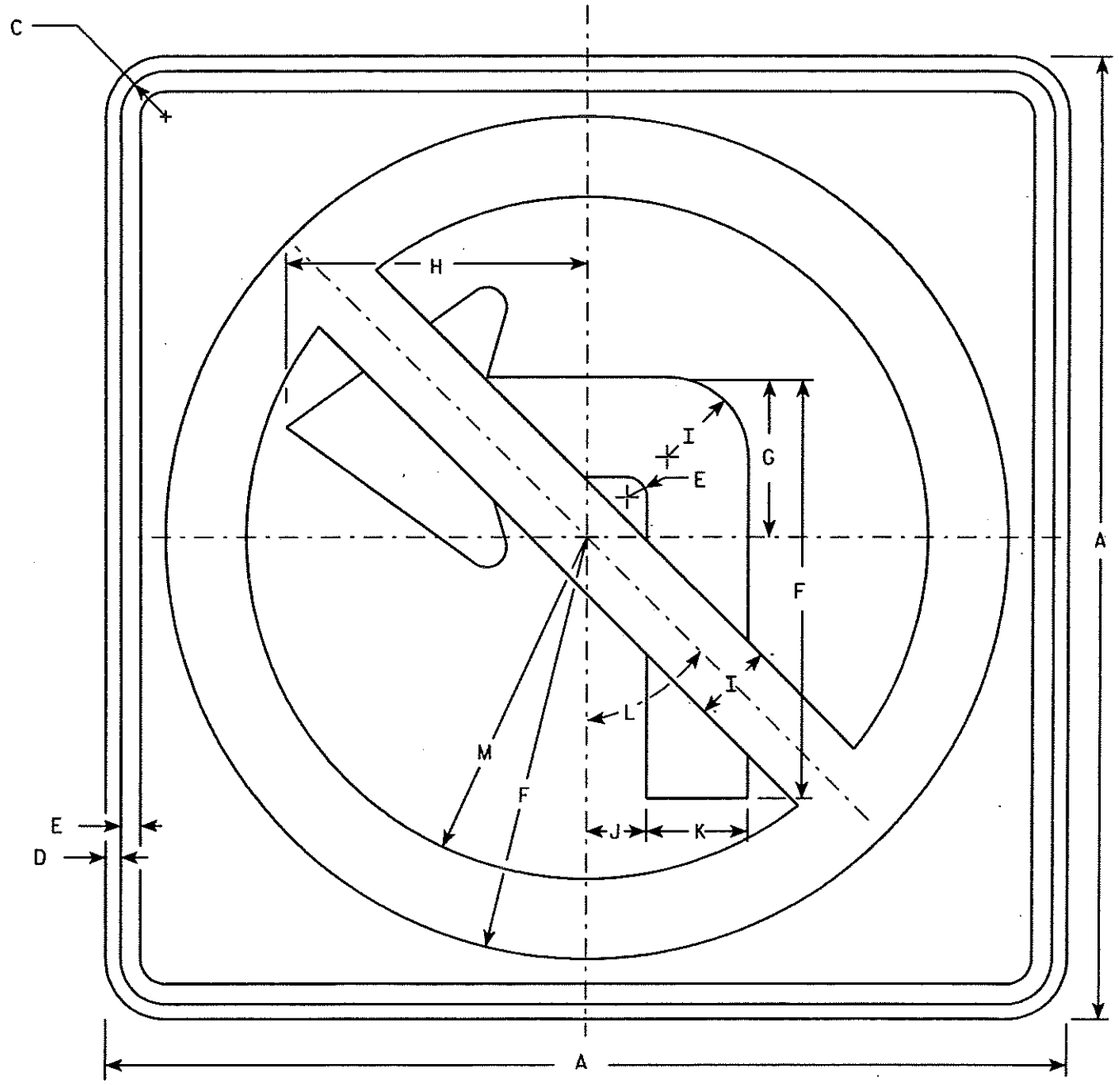

R3-2

NOTES

1. Sign is Type II - Type H Reflective - reference WIS DOT Standard Specification for HIGHWAY and STRUCTURE CONSTRUCTION latest edition.
2. Color:
   Background - White
   Message - See note 4
3. Corners may be square or rounded when base material is plywood but borders shall be rounded as shown. When base material is metal, the corners and borders shall be rounded.
4. Border & Arrow are non reflective black, the circle with diagonal bar is reflective red.

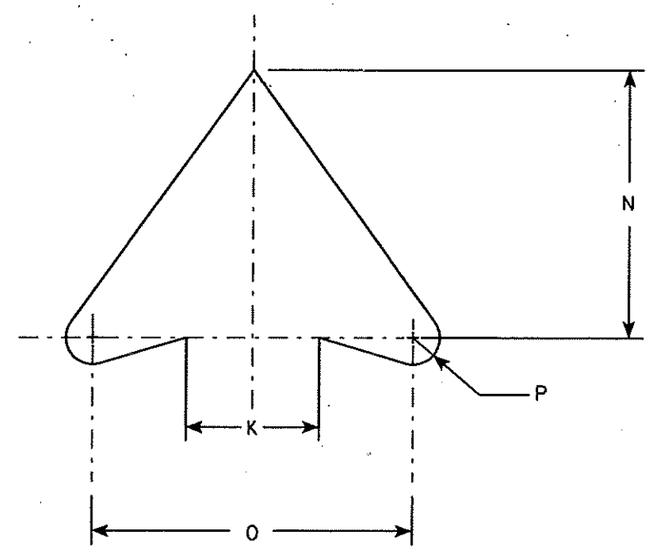

ARROW DETAIL

Metric equivalent for this sign is:

SIZE	
1	600 mm X 600 mm
2	600 mm X 600 mm
3	750 mm X 750 mm
4	900 mm X 900 mm
5	1200 mm X 1200 mm

SIZE	A	B	C	D	E	F	G	H	I	J	K	L	M	N	O	P	Q	R	S	T	U	V	W	X	Y	Z	Area sq. ft.	Area m^2
1	24		1 1/8	3/8	1/2	10 1/2	4	7 1/2	2	1 1/2	2 1/2	45°	8 1/2	5	6	1/2											4.0	0.36
2	24		1 1/8	3/8	1/2	10 1/2	4	7 1/2	2	1 1/2	2 1/2	45°	8 1/2	5	6	1/2											4.0	0.36
3	30		1 3/8	1/2	5/8	13 1/8	5	9 1/2	2 1/2	1 7/8	3 1/8	45°	10 5/8	6 1/4	7 1/2	5/8											6.25	0.56
4	36		1 5/8	5/8	3/4	15 3/4	6	11 1/4	3	2 1/4	3 3/4	45°	12 3/4	7 1/2	9	3/4											9.0	0.81
5	48		2 1/4	3/4	1	21	8	15	4	3	5	45°	17	10	12	1											16.0	1.44

STANDARD SIGN
R3-2

WISCONSIN DEPT OF TRANSPORTATION

APPROVED Chester J Spang
for State Traffic Engineer

DATE 2/01/02 PLATE NO. R3-2.9

PROJECT NO:	HWY:	COUNTY:		SHEET NO: 164 E

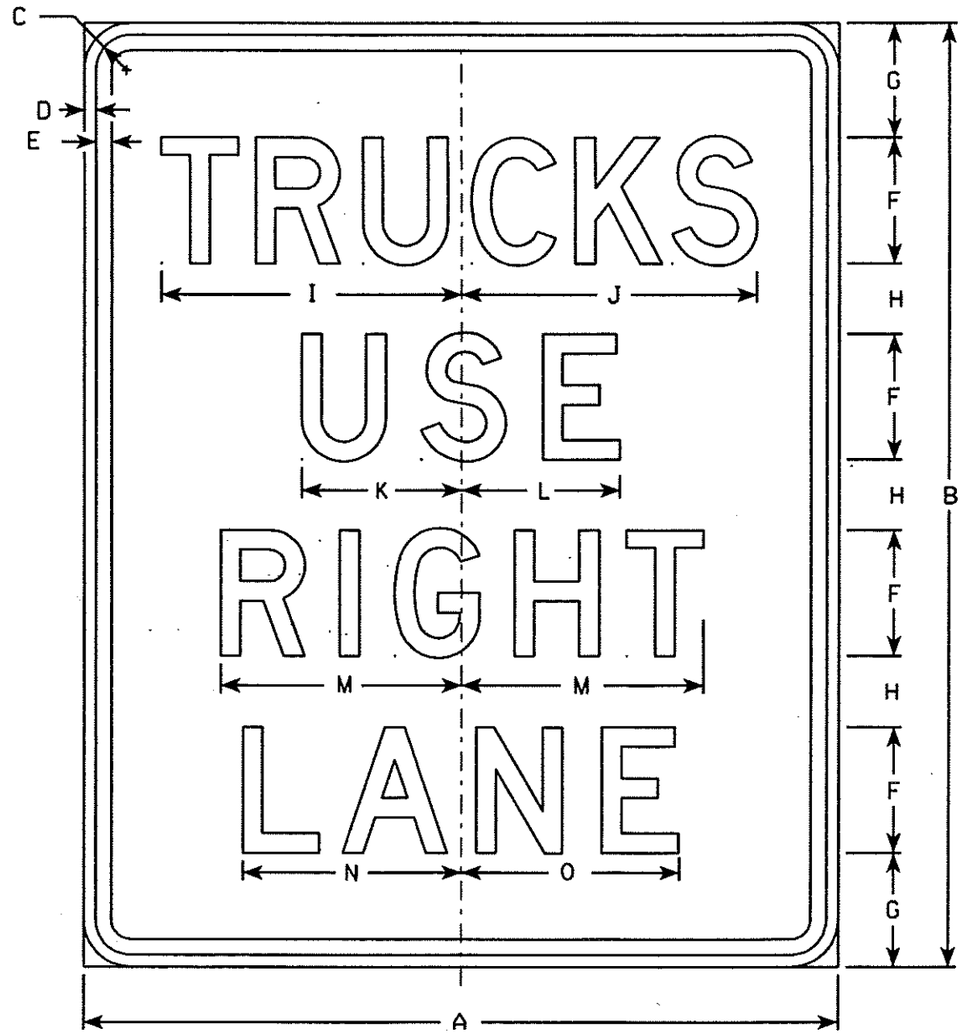

R4-5

NOTES

1. Sign is Type II - Type H Reflective - reference WIS DOT Standard Specification for HIGHWAY and STRUCTURE CONSTRUCTION latest edition.
2. Color:
   Background - White
   Message - Black
3. Message Series - D
4. Corners may be square or rounded when base material is plywood but borders shall be rounded as shown. When base material is metal, the corners and borders shall be rounded.
5. R4-5L & R4-5C are the same as R4-5 except LEFT or CENTER replaces RIGHT as order by code.

R4-5L

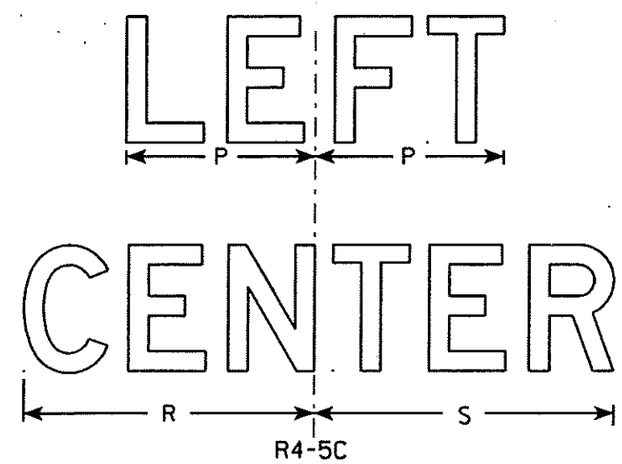

R4-5C

Metric equivalent for this sign is:

SIZE	
1	
2	600 mm X 750 mm
3	
4	900 mm X 1200 mm
5	1200 mm X 1500 mm

SIZE	A	B	C	D	E	F	G	H	I	J	K	L	M	N	O	P	Q	R	S	T	U	V	W	X	Y	Z	Area sq. ft.	Area m2
1																												
2	24	30	1 1/8	3/8	1/2	4	3 5/8	2 1/4	9 5/8	9 3/8	5 1/8	5 1/8	7 3/4	7 1/4	7	6		9 1/4	9 1/2								5.0	0.45
3																												
4	36	48	2 1/4	5/8	3/4	6	6	4	14 3/8	14 1/8	7 7/8	7 7/8	12 1/4	10 3/4	10 1/2	9 5/8		13 7/8	14 1/4								12.0	1.08
5	48	60	2 1/4	3/4	1	8	7 1/4	4 1/2	19 1/8	18 3/4	10 1/4	10 1/8	15 3/8	14	13 7/8	12		18 1/2	19 1/8								20.0	1.80

STANDARD SIGN
R4-5

WISCONSIN DEPT OF TRANSPORTATION

APPROVED Matthew R Rauch
for State Traffic Engineer

DATE 1/8/03 PLATE NO. R4-5.2

PROJECT NO: | HWY: | COUNTY:

SHEET NO: 165 E

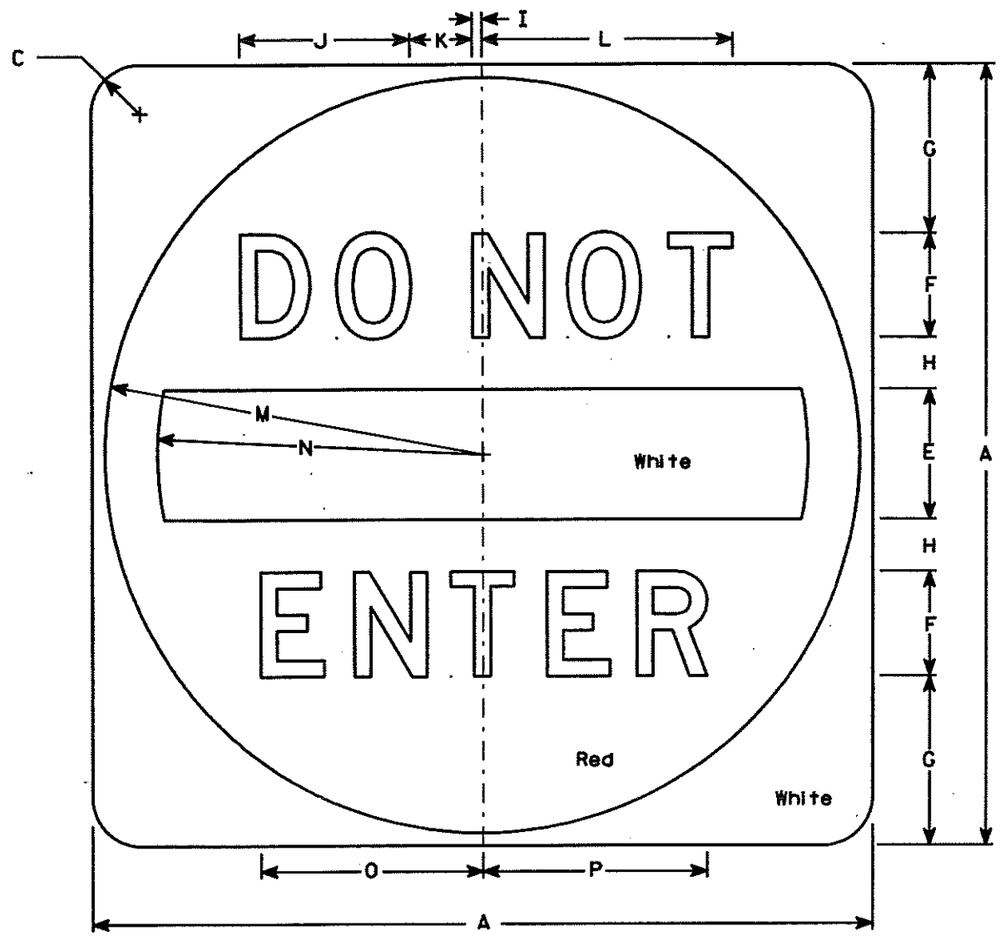

R5-1

NOTES

1. Sign is Type II - Type H Reflective - reference WIS DOT Standard Specification for HIGHWAY and STRUCTURE CONSTRUCTION latest edition.
2. Color:
   Background - See detail
   Message - White - Type H Reflective
3. Message Series - D
4. Corners may be square or rounded when base material is plywood but when base material is metal, the cornors shall be rounded.

Metric equivalent for this sign is:

SIZE	
1	
2	750 mm X 750 mm
3	900 mm X 900 mm
4	900 mm X 900 mm
5	1200 mm X 1200 mm

SIZE	A	B	C	D	E	F	G	H	I	J	K	L	M	N	O	P	Q	R	S	T	U	V	W	X	Y	Z	Area sq. ft.	Area m2
1																												
2	30		1 7/8		5	4	6 1/2	2	3/8	6 1/2	2 3/8	9 5/8	14 1/2	12 1/2	8 1/2	8 5/8											6.26	0.56
3	36		2 1/4		6	5	7 1/2	2 1/2	1/2	8 1/8	3	12 1/8	17 1/2	15	10 5/8	10 3/4											9.0	0.81
4	36		2 1/4		6	5	7 1/2	2 1/2	1/2	8 1/8	3	12 1/8	17 1/2	15	10 5/8	10 3/4											9.0	0.81
5	48		3		8	6	11	3	5/8	9 3/4	3 5/8	14 1/2	23 1/2	20	12 3/4	12 7/8											16.0	1.44

STANDARD SIGN
R5-1

WISCONSIN DEPT OF TRANSPORTATION

APPROVED Matthew R Rauch
For State Traffic Engineer

DATE 7/05/05 PLATE NO. R5-1.14

PROJECT NO: | HWY: | COUNTY: | SHEET NO: 166 E

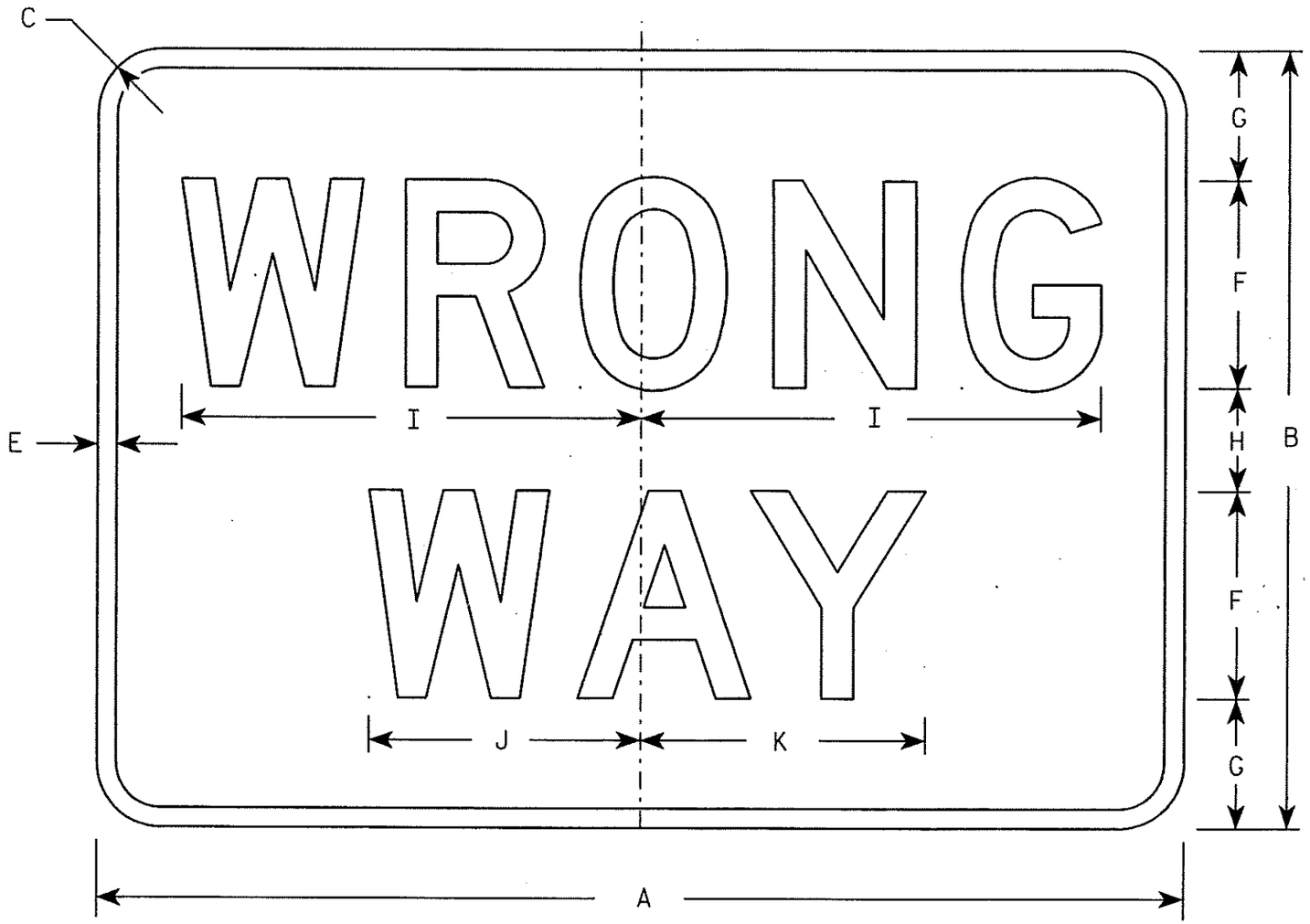

R5-1A

NOTES

1. Sign is Type II - Type H Reflective - reference WIS DOT Standard Specification for HIGHWAY and STRUCTURE CONSTRUCTION latest edition.
2. Color:
   Background - Red
   Message - White
3. Message Series - D
4. Corners may be square or rounded when base material is plywood but borders shall be rounded as shown. When base material is metal, the corners and borders shall be rounded.

Metric equivalent for this sign is:

SIZE	
1	750 mm X 450 mm
2	900 mm X 600 mm
3	1050 mm X 750 mm
4	1050 mm X 750 mm
5	1050 mm X 750 mm

SIZE	A	B	C	D	E	F	G	H	I	J	K	L	M	N	O	P	Q	R	S	T	U	V	W	X	Y	Z	Area sq. ft.	Area m^2
1	30	18	1 1/2		1/2	5	3	2	11	6 1/2	6 7/8																3.75	0.34
2	36	24	2		5/8	6	4 1/2	3	13 1/4	7 7/8	8 1/4																6.00	0.54
3	42	30	2 1/2		3/4	8	5	4	17 3/4	10 1/2	11																8.75	0.79
4	42	30	2 1/2		3/4	8	5	4	17 3/4	10 1/2	11																8.75	0.79
5	42	30	2 1/2		3/4	8	5	4	17 3/4	10 1/2	11																8.75	0.79

STANDARD SIGN
R5-1A

WISCONSIN DEPT OF TRANSPORTATION

APPROVED Matthew R Rauch
for State Traffic Engineer

DATE 10/24/02 PLATE NO. R5-1A.1

PROJECT NO: | HWY: | COUNTY: | SHEET NO: 167 | E

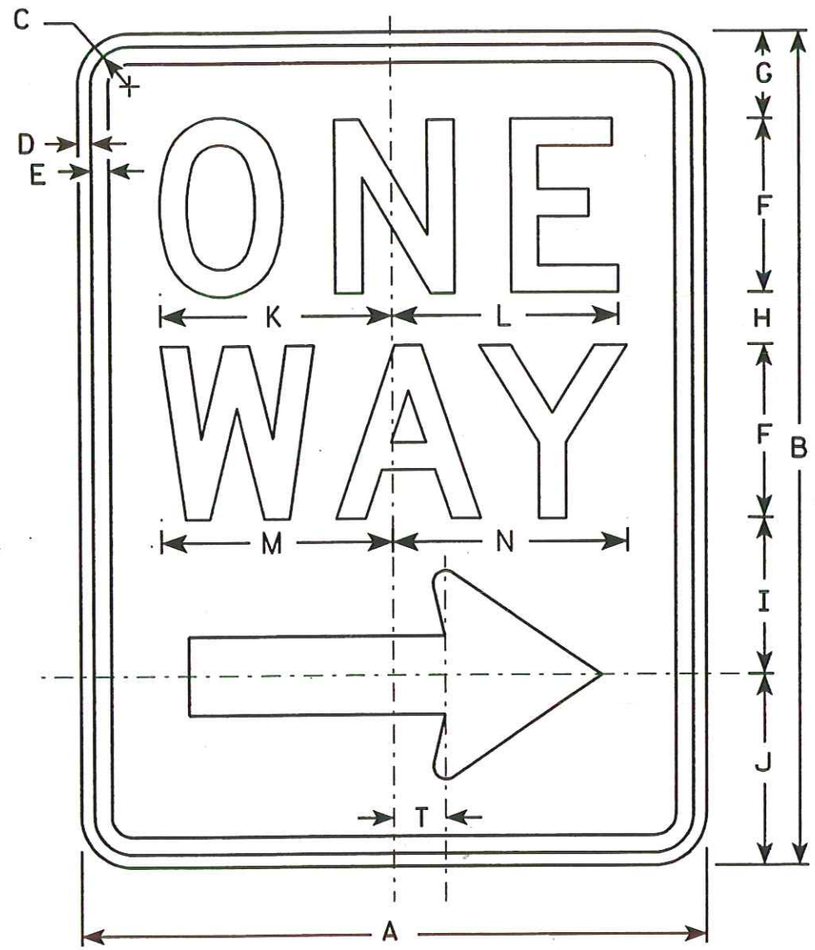

R6-2R

NOTES

1. Sign is Type II - Type H Reflective - reference WIS DOT Standard Specification for HIGHWAY and STRUCTURE CONSTRUCTION latest edition.
2. Color:
   Background - White
   Message - Black
3. Message Series - D
4. Corners may be square or rounded when base material is plywood but borders shall be rounded as shown. When base material is metal, the corners and borders shall be rounded.
5. R6-2L same as R6-2R except arrow points to the left.

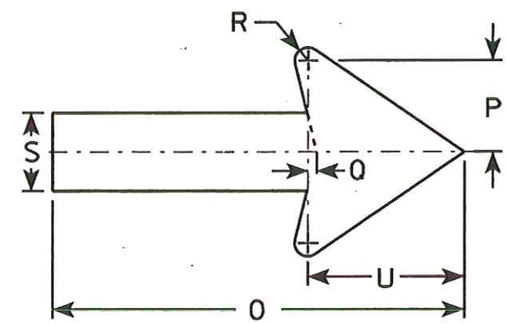

7

Metric equivalent for this sign is:

SIZE	
1	450 mm X 600 mm
2	600 mm X 750 mm
3	900 mm X 1200 mm
4	900 mm X 1200 mm
5	900 mm X 1200 mm

SIZE	A	B	C	D	E	F	G	H	I	J	K	L	M	N	O	P	Q	R	S	T	U	V	W	X	Y	Z	Area sq. ft.	Area m^2
1	18	24	1 1/8	3/8	1/2	5	2 1/2	1 1/2	4 1/2	5 1/2	6 5/8	6 1/2	6 5/8	6 3/4	11 7/8	2 5/8	1/4	3/8	2 1/4	1 1/2	4 1/2						3.0	0.27
2	24	30	1 1/8	3/8	1/2	6	3	2 1/2	5 1/2	7	8 1/8	8 1/8	8 1/2	8 5/8	16	3 1/2	3/8	1/2	3	2	6						5.0	0.45
3	24	30	1 1/8	3/8	1/2	6	3	2 1/2	5 1/2	7	8 1/8	8 1/8	8 1/2	8 5/8	16	3 1/2	3/8	1/2	3	2	6						5.0	0.45
4	36	48	1 7/8	1/2	5/8	10	5 1/4	3 1/4	9	10 1/2	12 3/4	12 3/4	13 1/4	13 1/2	24	5 5/8	1/2	3/4	4 3/4	3	9						12.0	1.08
5	36	48	1 7/8	1/2	5/8	10	5 1/4	3 1/4	9	10 1/2	12 3/4	12 3/4	13 1/4	13 1/2	24	5 5/8	1/2	3/4	4 3/4	3	9						12.0	1.08

STANDARD SIGN
R6-2 R&L

WISCONSIN DEPT OF TRANSPORTATION

APPROVED Matthew R Rauch
for State Traffic Engineer

DATE 10/18/05 PLATE NO. R6-2.7

PROJECT NO: | HWY: | COUNTY: | SHEET NO: 168 | E

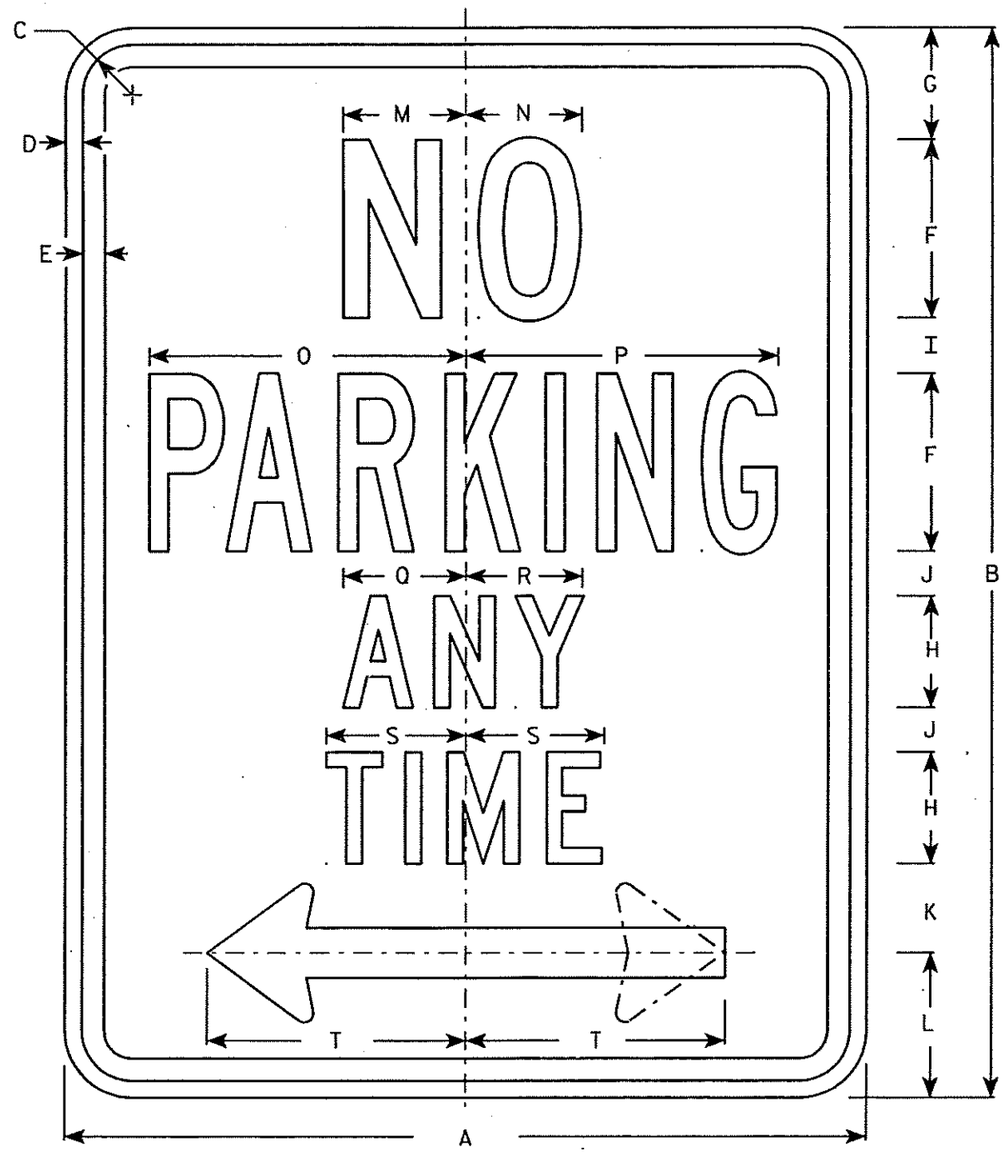

R7-1

NOTES

1. Sign is Type II - Type H Reflective - reference WIS DOT Standard Specification for HIGHWAY and STRUCTURE CONSTRUCTION latest edition.
2. Color:
   Background - White
   Message - Red
3. Message Series - See Note 5
4. Corners may be square or rounded when base material is plywood but borders shall be rounded as shown. When base material is metal, the corners and borders shall be rounded.
5. Lines 1, 3 and 4 are series C, line 2 is series B.
6. R7-1D (double arrow)
   R7-1L (left arrow)
   R7-1R (right arrow)

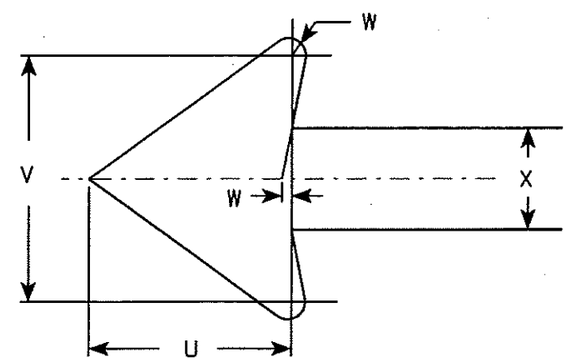

Metric equivalent for this sign is:

SIZE	
1	300 mm X 450 mm
2	450 mm X 600 mm
3	600 mm X 750 mm
4	
5	

SIZE	A	B	C	D	E	F	G	H	I	J	K	L	M	N	O	P	Q	R	S	T	U	V	W	X	Y	Z	Area sq. ft.	Area m2
1	12	18	1 1/8	3/8	3/8	3	1 7/8	2	7/8	5/8	1 1/2	2 1/2	2	2	4 7/8	4 7/8	2 1/4	2 1/8	2 1/2	3 7/8	1 1/2	1 3/4	1/8	3/4			1.5	0.14
2	18	24	1 1/8	3/8	1/2	4	2 1/2	2 1/2	1 1/4	1	2	3 1/4	2 3/4	2 5/8	7 1/8	7	2 3/4	2 5/8	3 1/8	5 7/8	2 1/4	2 5/8	1/4	1 1/8			3.0	0.27
3	24	30	1 1/8	3/8	1/2	5	3	3	2	1 1/4	2 1/2	4	3 1/4	3 3/8	9 1/4	9 1/4	3 1/4	3 1/4	3 3/4	7 3/4	3	3 1/2	1/4	1 1/2			5.0	0.45
4																												
5																												

STANDARD SIGN
R7-1

WISCONSIN DEPT OF TRANSPORTATION

APPROVED Chester J Spay for State Traffic Engineer

DATE 2/7/02 PLATE NO. R7-1.8

PROJECT NO:	HWY:	COUNTY:		SHEET NO: 169	E

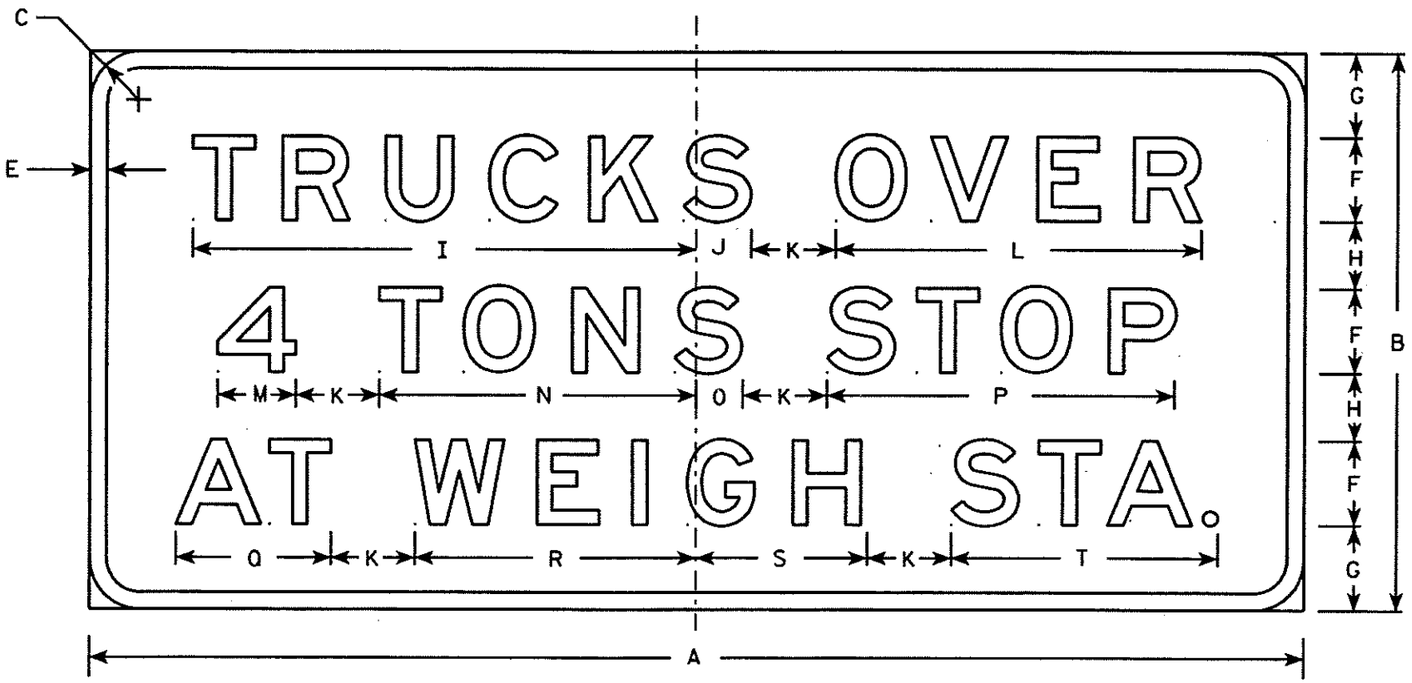

R13-1

NOTES

1. Sign is Type I or Type II - Non-Reflective - reference WIS DOT Standard Specification for HIGHWAY and STRUCTURE CONSTRUCTION latest edition.
2. Color:
   Background - Black (Non-reflective)
   Message - White Type H Reflective
3. Message Series - E
4. Corners may be square or rounded but borders shall be rounded as shown.
5. Code sizes 2 & 4 are Type II, Code size 5 is Type I. All code sizes have a non-reflective background.
6. Base material for Type II signs shall be plywood.

Metric equivalent for this sign is:

SIZE	
1	
2	2250 mm X 900 mm
3	
4	3000 mm X 1200 mm
5	3600 mm X 1650 mm

SIZE	A	B	C	D	E	F	G	H	I	J	K	L	M	N	O	P	Q	R	S	T	U	V	W	X	Y	Z	Area sq. ft.	Area m²
1																												
2	90	36	3		1	6	5	4	36	3 7/8	6	26 1/8	5 5/8	22 3/4	3 1/4	25	11 1/8	19 7/8	12 1/4	19 1/2							22.5	2.03
3																												
4	120	48	6		1	8	7	5	47 7/8	5 1/8	8	34 3/4	7 3/8	30 1/8	4 3/8	33 1/8	14 7/8	26 3/8	17 1/8	26 1/8							40.0	3.60
5	144	66	6		2	10	10	8	59 3/4	6 1/2	10	43 1/4	9 1/4	37 1/2	5 1/2	36 7/8	17 3/4	33 1/4	20 1/4	31 1/2							66.0	5.94

STANDARD SIGN
R13-1

WISCONSIN DEPT OF TRANSPORTATION

APPROVED Charles J Sprague
for State Traffic Engineer

DATE 2/13/02 PLATE NO. R13-L5

PROJECT NO: | HWY: | COUNTY: | SHEET NO: 170 E

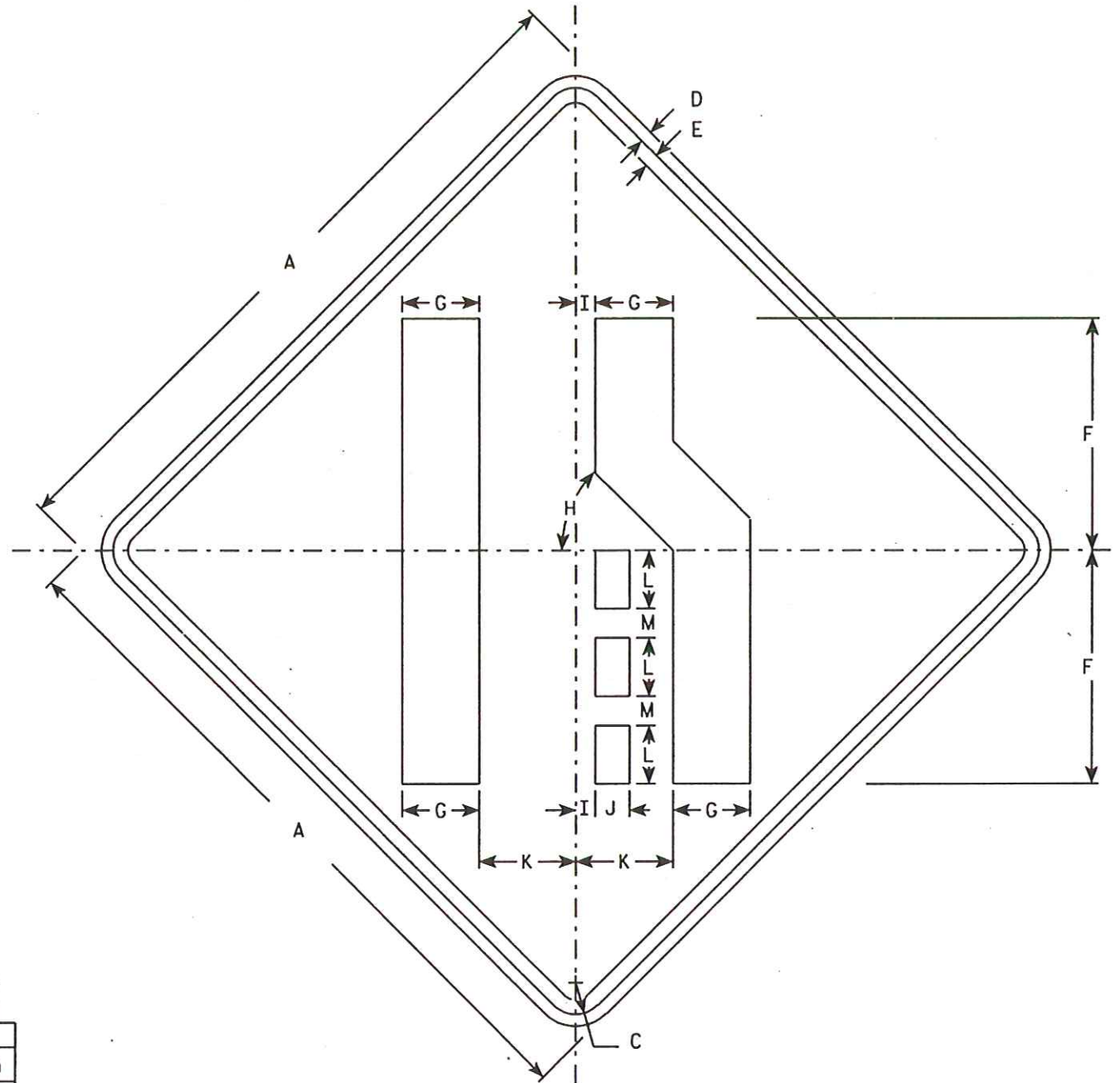

W4-2R

NOTES

1. Sign is Type II - Type H Reflective - reference WIS DOT Standard Specification for HIGHWAY and STRUCTURE CONSTRUCTION latest edition.
2. Color:
   Background - Yellow
   Message - Black
3. Corners may be square or rounded when base material is plywood but borders shall be rounded as shown. When base material is metal, the corners and borders shall be rounded.
4. W4-2L is the same as W4-2R except the message is reversed along the vertical centerline.

Metric equivalent for this sign is:

SIZE	
1	750 mm X 750 mm
2	900 mm X 900 mm
3	1200 mm X 1200 mm
4	1200 mm X 1200 mm
5	1200 mm X 1200 mm

SIZE	A	B	C	D	E	F	G	H	I	J	K	L	M	N	O	P	Q	R	S	T	U	V	W	X	Y	Z	Area sq. ft.	Area m2
1	30		1 3/8	1/2	5/8	10	3 3/8	45°	7/8	1 1/2	4 1/4	2 1/2	1 1/4														6.25	0.56
2	36		1 5/8	5/8	3/4	12	4	45°	1	1 3/4	5	3	1 1/2														9.0	0.81
3	48		2 1/4	3/4	1	16	5 3/8	45°	1 1/4	2 3/8	6 3/4	4	2														16.0	1.44
4	48		2 1/4	3/4	1	16	5 3/8	45°	1 1/4	2 3/8	6 3/4	4	2														16.0	1.44
5	48		2 1/4	3/4	1	16	5 3/8	45°	1 1/4	2 3/8	6 3/4	4	2														16.0	1.44

STANDARD SIGN
W4-2

WISCONSIN DEPT OF TRANSPORTATION

APPROVED Matthew R Rauch
for State Traffic Engineer

DATE 2/08/05 PLATE NO. W4-2.11

PROJECT NO:

SHEET NO: 171 E

EARTHWORK TABLE

STATION	CUT	FILL	Inc. Vol. CUT	Inc. Vol. EXP. FILL	Cum. Vol. CUT	Cum. Vol. EXP. FILL	MASS HAUL
339'R'+50	39.6	0.0					
340'R'+00	42.3	0.0	76	0	76	0	76
340'R'+50	40.4	0.0	77	0	152	0	152
341'R'+00	40.0	1.0	74	1	227	1	226
341'R'+50	34.8	3.5	69	4	296	5	291
342'R'+00	36.7	0.0	66	3	362	8	354
342'R'+50	40.0	0.0	71	0	433	8	425
343'R'+00	38.9	0.0	73	0	506	8	498
343'R'+50	29.3	0.4	63	0	570	9	561
344'R'+00	19.8	4.9	46	5	615	14	601
344'R'+50	15.9	69.1	33	69	648	82	566
345'R'+00	18.0	51.9	31	112	680	194	485
345'R'+50	21.0	6.1	44	65	724	259	464
346'R'+00	28.9	4.4	46	10	770	269	501
346'R'+50	33.4	1.3	58	5	827	274	553
347'R'+00	32.5	0.6	61	2	888	276	612
347'R'+50	32.2	0.7	60	1	948	277	671
348'R'+00	29.7	17.8	57	17	1005	295	711
348'R'+50	24.8	19.5	50	35	1056	329	727
349'R'+00	21.2	17.9	43	35	1098	364	735
349'R'+50	19.1	18.4	37	34	1136	397	738
350'R'+00	22.6	13.6	39	30	1174	427	747
350'R'+50	33.6	2.7	52	15	1226	442	784
351'R'+00	46.0	5.0	74	7	1300	449	851
351'R'+50	31.5	0.7	72	5	1372	454	917
352'R'+00	41.4	5.9	67	6	1439	460	979
352'R'+50	34.3	1.8	70	7	1509	468	1042
353'R'+00	34.9	0.0	64	2	1573	469	1104
353'R'+50	47.5	18.4	76	17	1650	486	1163
354'R'+00	43.5	21.8	84	37	1734	523	1210
354'R'+50	37.9	67.2	75	82	1809	606	1203
355'R'+00	38.0	89.4	70	145	1879	751	1128
355'R'+50	37.9	70.0	70	148	1950	899	1051
356'R'+00	30.9	32.9	64	95	2013	994	1020
356'R'+50	28.3	10.0	55	40	2068	1034	1035
357'R'+00	33.5	1.1	57	10	2125	1044	1082
357'R'+50	36.4	0.0	65	1	2190	1045	1145
358'R'+00	37.1	0.0	68	0	2258	1045	1213

STATION	CUT	FILL	Inc. Vol. CUT	Inc. Vol. EXP. FILL	Cum. Vol. CUT	Cum. Vol. EXP. FILL	MASS HAUL
0'S'+00	3.8	1.9					
0'S'+50	19.6	2.3	22	4	22	4	18
1'S'+00	22.9	1.0	39	3	61	7	54
1'S'+50	27.2	0.5	46	1	107	8	99
2'S'+00	27.8	1.6	51	2	158	10	148
2'S'+50	36.0	1.6	59	3	217	13	204
3'S'+00	48.0	0.1	78	2	295	15	280
3'S'+50	41.4	5.0	83	5	378	20	358
4'S'+00	55.5	102.2	90	99	468	119	349
4'S'+50	121.9	31.3	164	124	632	243	390
5'S'+00	122.7	71.4	227	95	859	338	521
5'S'+50	111.3	39.4	217	103	1075	440	635
6'S'+00	98.4	28.4	194	63	1269	503	766
6'S'+50	95.3	25.9	179	50	1449	553	895
7'S'+00	96.5	39.7	178	61	1626	614	1012
7'S'+50	95.0	87.4	177	118	1804	732	1072
8'S'+00	97.7	137.8	178	209	1982	940	1042
8'S'+50	104.1	38.2	187	163	2169	1103	1066
9'S'+00	61.9	11.0	154	46	2322	1149	1174
9'S'+50	25.9	56.9	81	63	2404	1212	1192
10'S'+00	29.0	61.2	51	109	2455	1321	1134
10'S'+50	26.0	0.3	51	57	2506	1378	1128
11'S'+00	4.2	0.4	28	1	2534	1379	1155

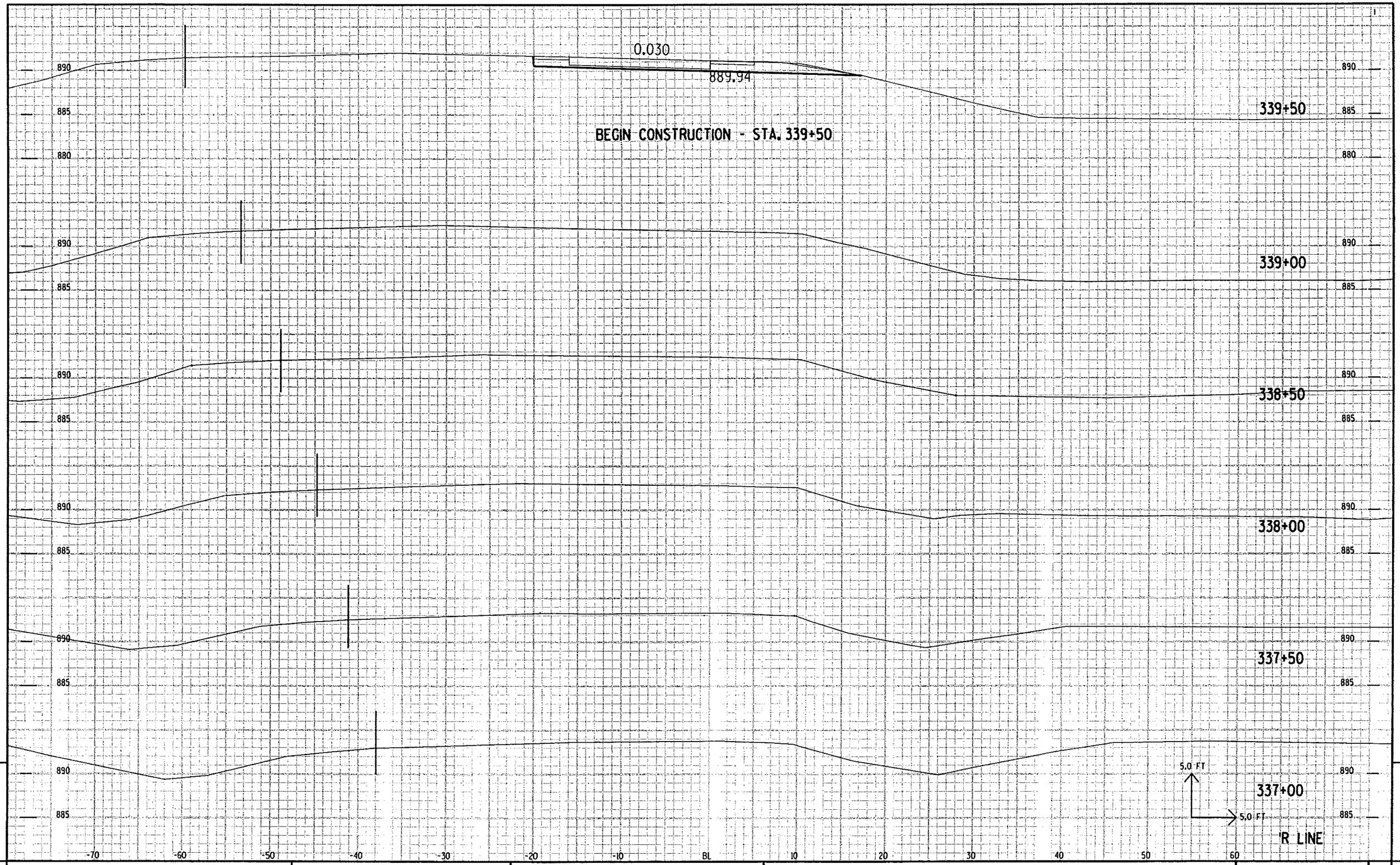

STATE PROJECT NO: 1002-02-72	HWY: IH 39/90	COUNTY: DANE	CROSS SECTIONS: 'R' LINE	SHEET NO: 173	E

FILE NAME : C:\Users\P\De\SMEF16\xs21fin5-5.DGN PLOT DATE : 08-FEB-2006 13:01 PLOT BY : DOTRES PLOT NAME: XS2FIN.dgn PLOT SCALE : 2:1

9

9

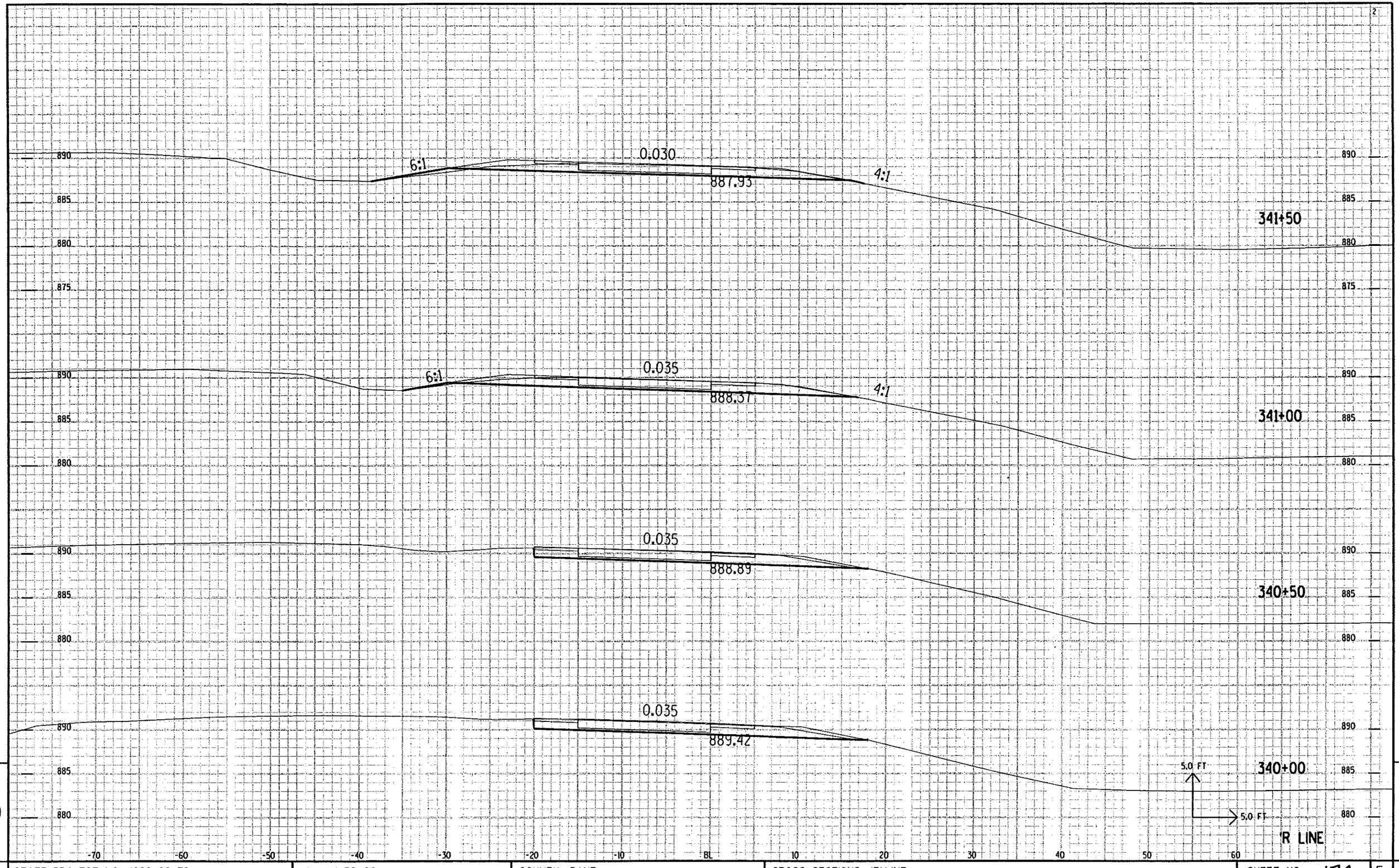

STATE PROJECT NO: 1002-02-72	HWY: IH 39/90	COUNTY: DANE	CROSS SECTIONS: 'R' LINE	SHEET NO: 174	E

FILE NAME : C:\Users\P\De\SHEF16\xs21fin5-5.DGN PLOT DATE : 08-FEB-2006 13:05 PLOT BY : DOTRES PLOT NAME : PLOT SCALE : 2:1

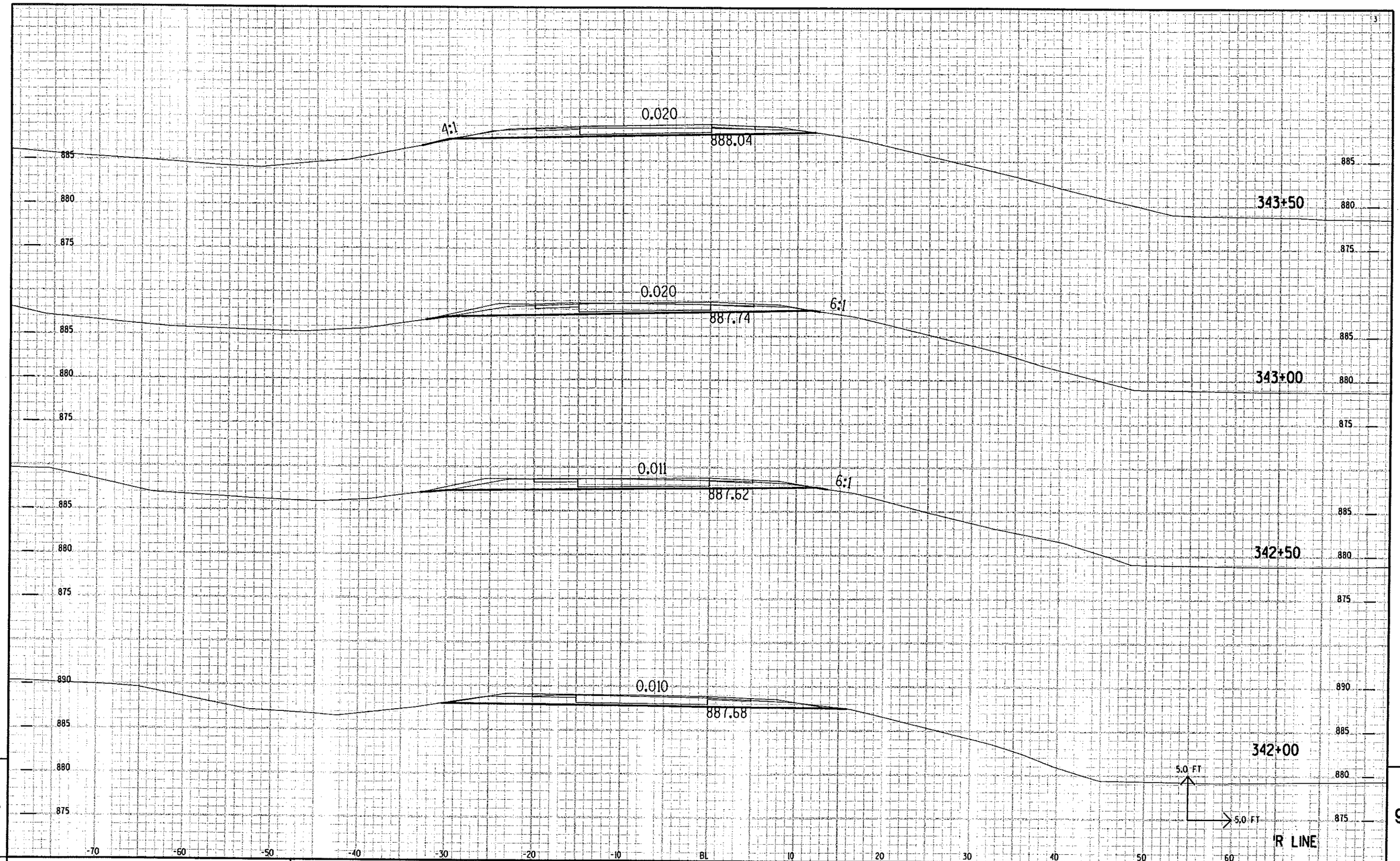

9

9

STATE PROJECT NO: 1002-02-72	HWY: IH 39/90	COUNTY: DANE	CROSS SECTIONS: 'R' LINE	SHEET NO: 175	E

FILE NAME : C:\Users\PW\De\SMEF16\xs21fin6-5.DGN PLOT DATE : 08-FEB-2006 13:06 PLOT BY : DOTRES PLOT NAME : PLOT SCALE : 2:1

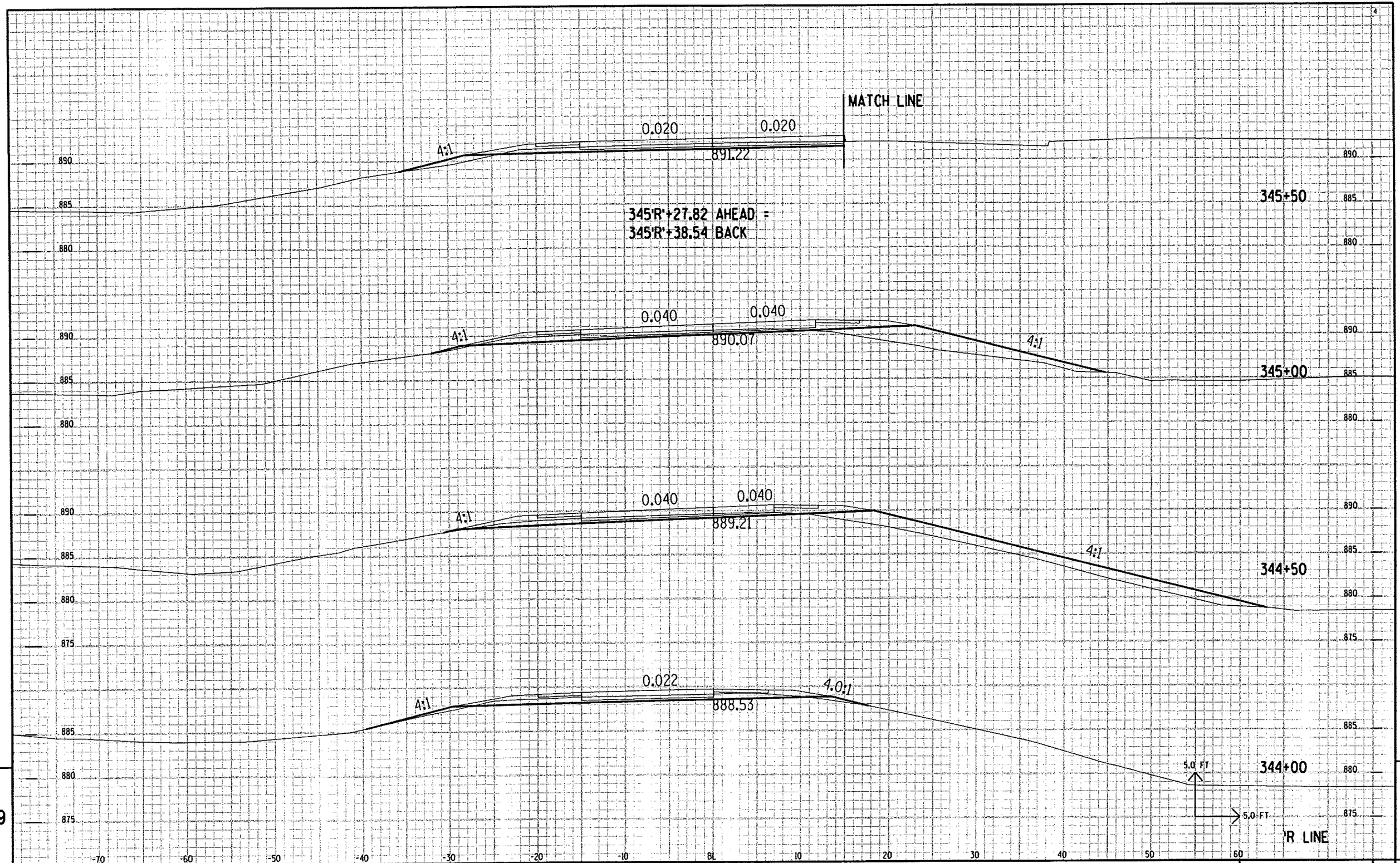

STATE PROJECT NO: 1002-02-72	HWY: IH 39/90	COUNTY: DANE	CROSS SECTIONS: 'R' LINE	SHEET NO: 176	E

FILE NAME : C:\Users\P\De\SWEF16\xs21fin5-5.DGN PLOT DATE : 08-FEB-2006 13:13 PLOT BY : DOTRES PLOT NAME : PLOT SCALE : 2:1

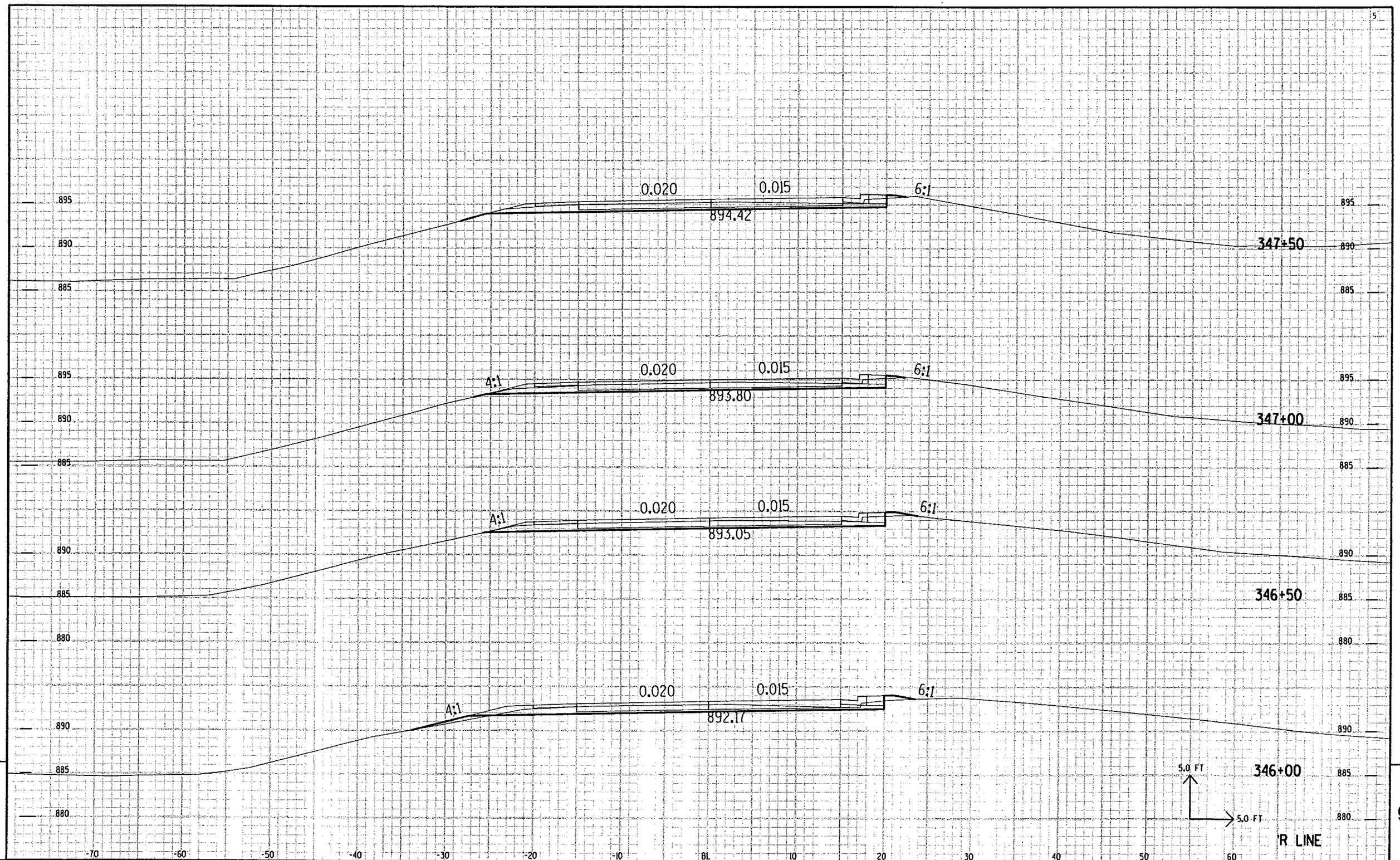

STATE PROJECT NO: 1002-02-72	HWY: IH 39/90	COUNTY: DANE	CROSS SECTIONS: 'R' LINE	SHEET NO: 177	E

FILE NAME : C:\Users\P\De\SMEF16\xs21fin5-5.DGN PLOT DATE : 08-FEB-2006 13:13 PLOT BY : DOTRES PLOT NAME : PLOT SCALE : 2:1

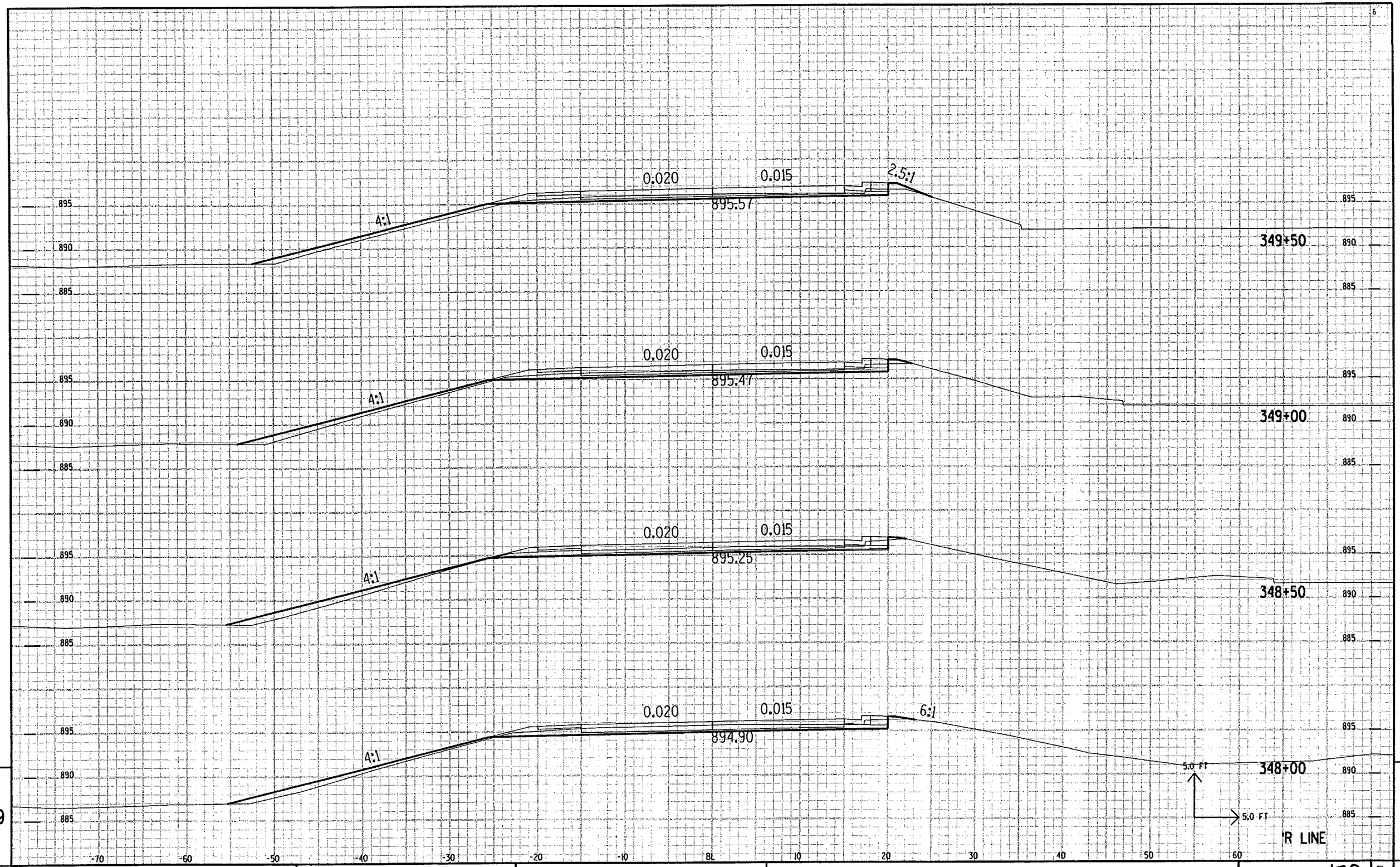

STATE PROJECT NO: 1002-02-72	HWY: IH 39/90	COUNTY: DANE	CROSS SECTIONS: 'R' LINE	SHEET NO: 178	E

FILE NAME : C:\Users\P\De\SWEF16\xs21fin6-5.DGN PLOT DATE : 08-FEB-2006 13:22 PLOT BY : DOTRES PLOT NAME : PLOT SCALE : 2:1

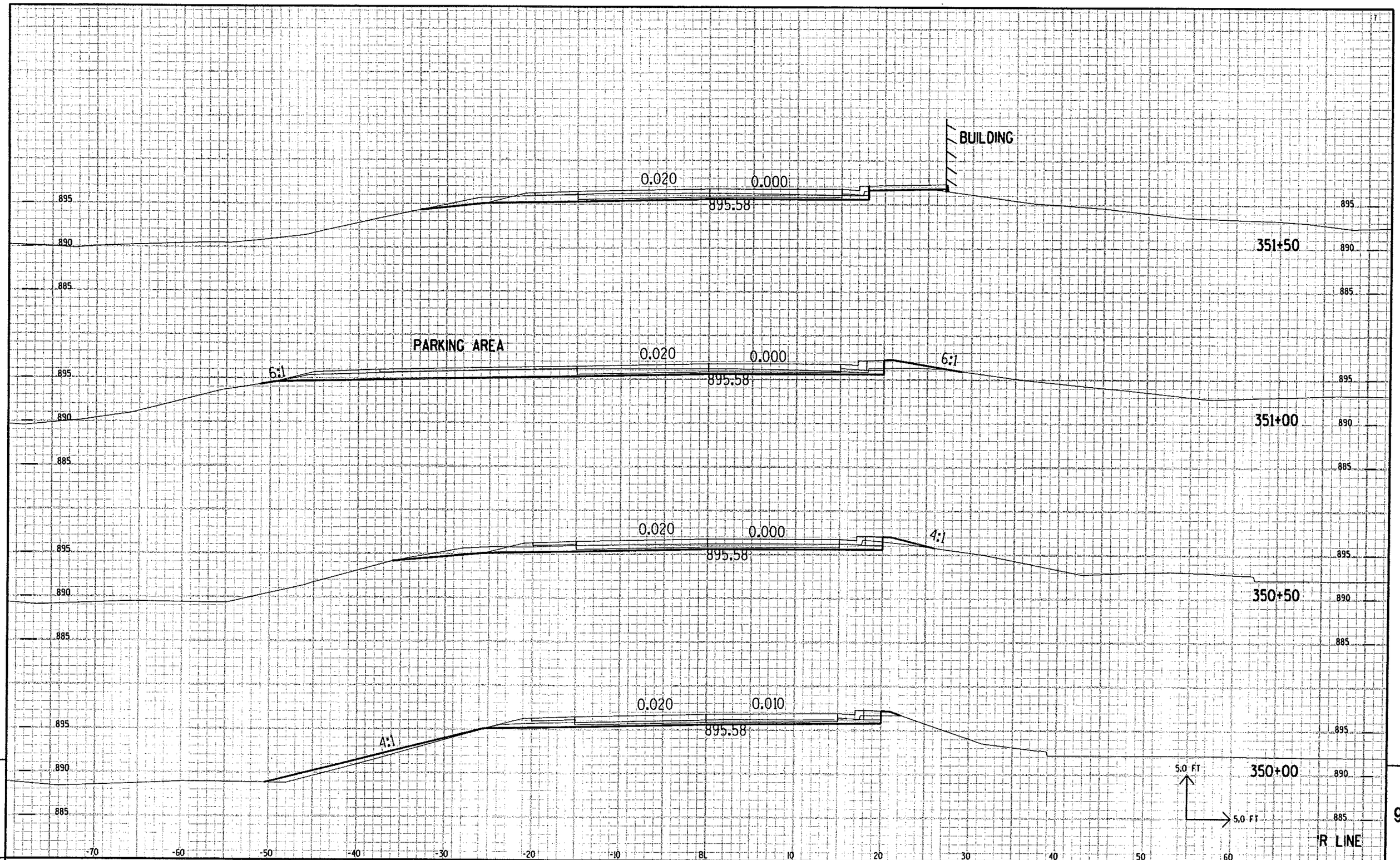

STATE PROJECT NO: 1002-02-72	HWY: IH 39/90	COUNTY: DANE	CROSS SECTIONS: 'R' LINE	SHEET NO: 179	E

FILE NAME : C:\Users\P\De\SMEF16\xs21fir5-5.DGN PLOT DATE : 08-FEB-2006 13:23 PLOT BY : DOTRES PLOT NAME : PLOT SCALE : 2:1

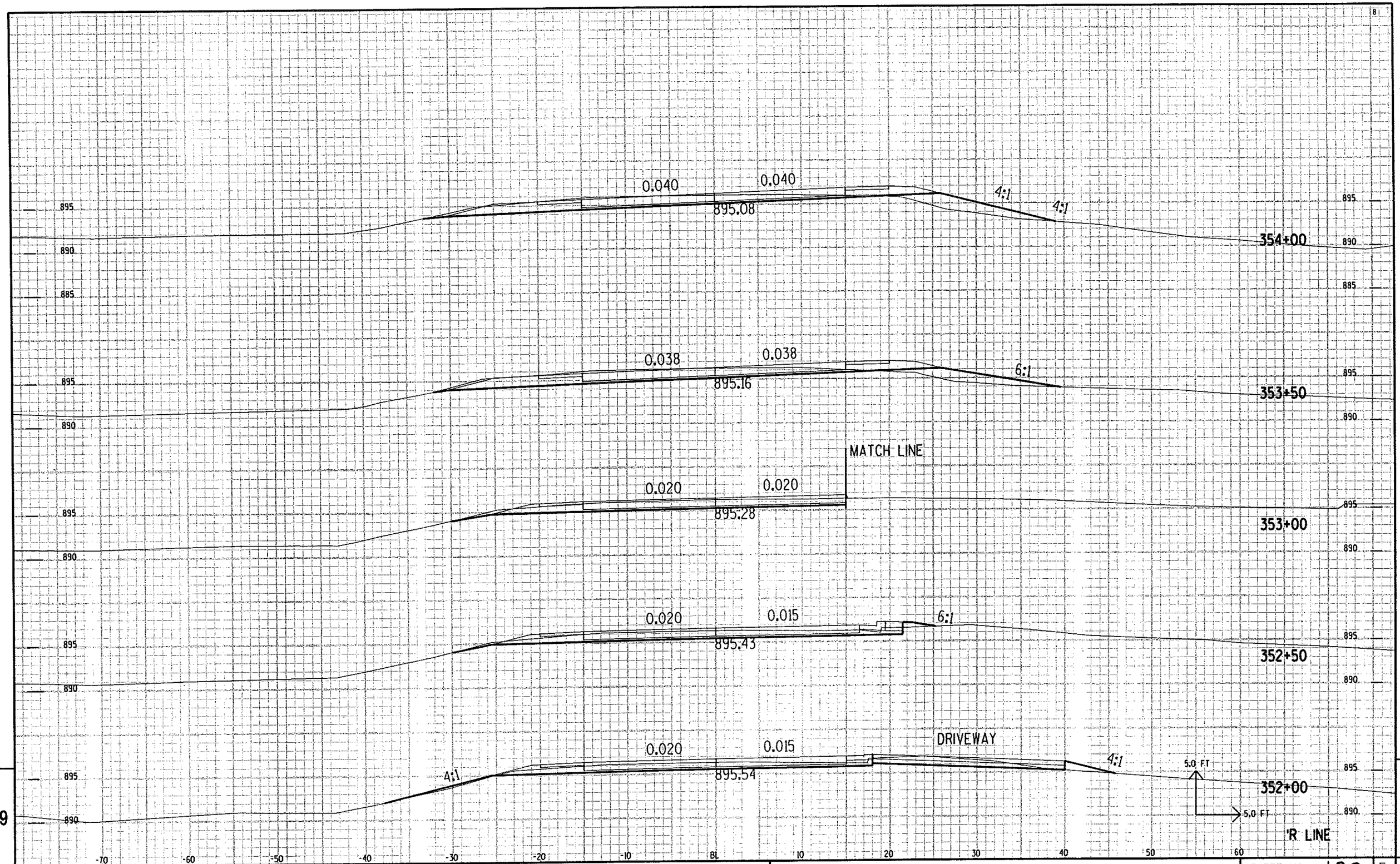

STATE PROJECT NO: 1002-02-72	HWY: IH 39/90	COUNTY: DANE	CROSS SECTIONS: 'R' LINE	SHEET NO: 80	E

FILE NAME : C:\Users\P\De\SWEF16\xs21fin5-5.DGN PLOT DATE : 08-FEB-2006 13:32 PLOT BY : DOTRES PLOT NAME : PLOT SCALE : 2:1

9

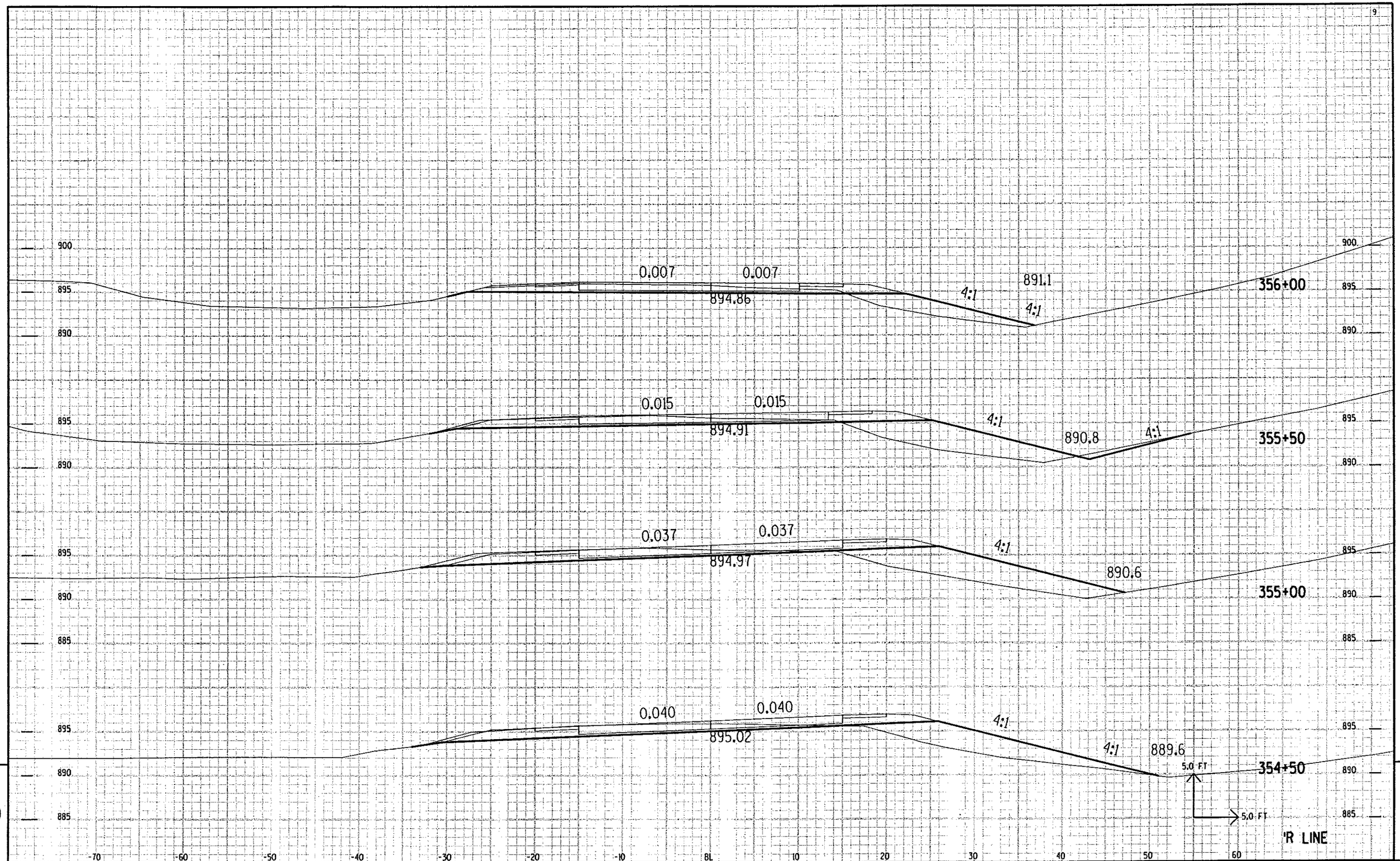

STATE PROJECT NO: 1002-02-72	HWY: IH 39/90	COUNTY: DANE	CROSS SECTIONS: 'R' LINE	SHEET NO: 181	E

FILE NAME : C:\Users\P\De\SHEF16\xs21fin5-5.DGN PLOT DATE : 08-FEB-2006 13:32 PLOT BY : DOTRES PLOT NAME : PLOT SCALE : 2:1

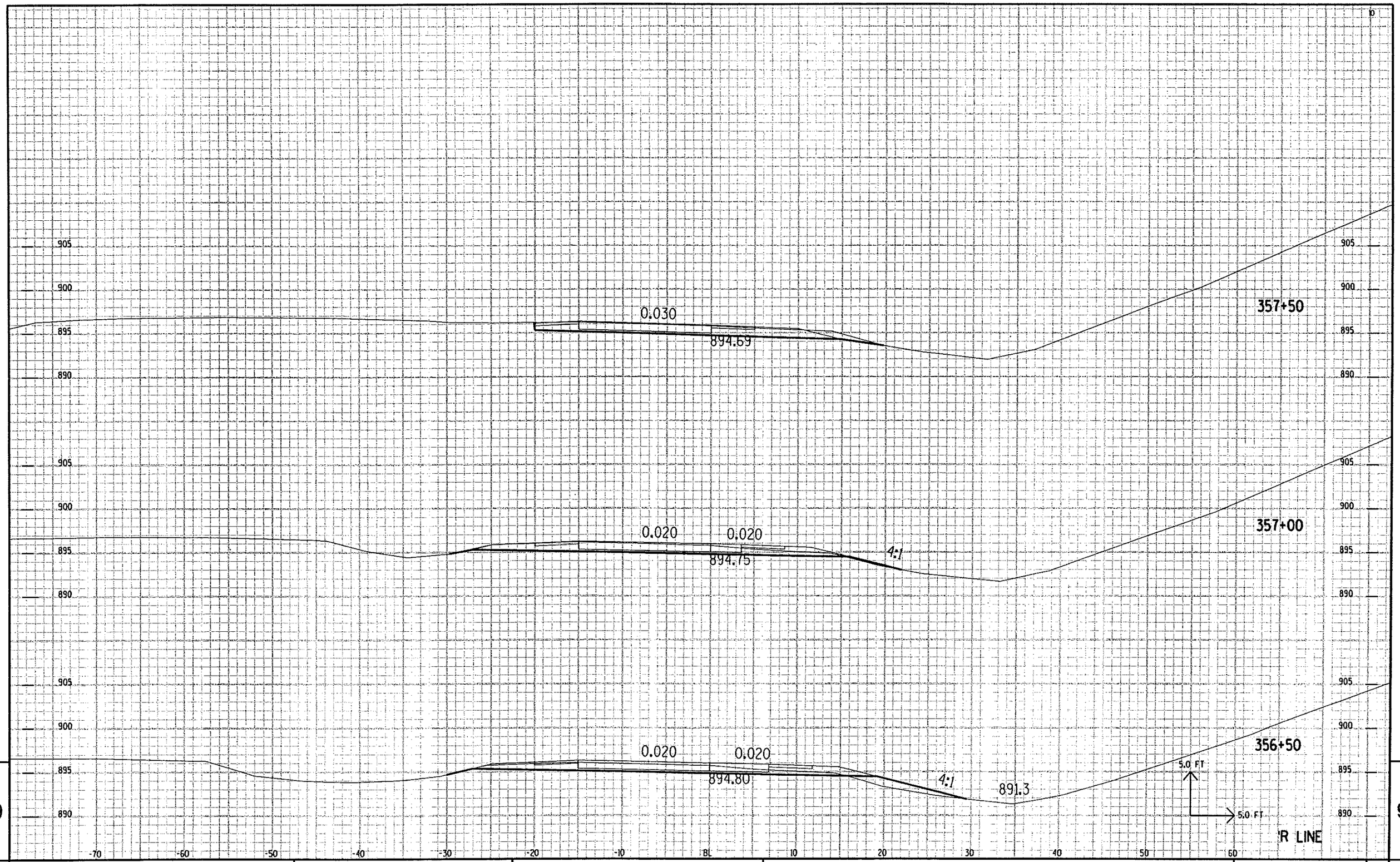

STATE PROJECT NO: 1002-02-72	HWY: IH 39/90	COUNTY: DANE	CROSS SECTIONS: 'R' LINE	SHEET NO: 182	E

FILE NAME : C:\Users\P\De\SWEF16\xs21fin6-5.DGN PLOT DATE : 08-FEB-2006 13:58 PLOT BY : DOTRES PLOT NAME : PLOT SCALE : 2:1

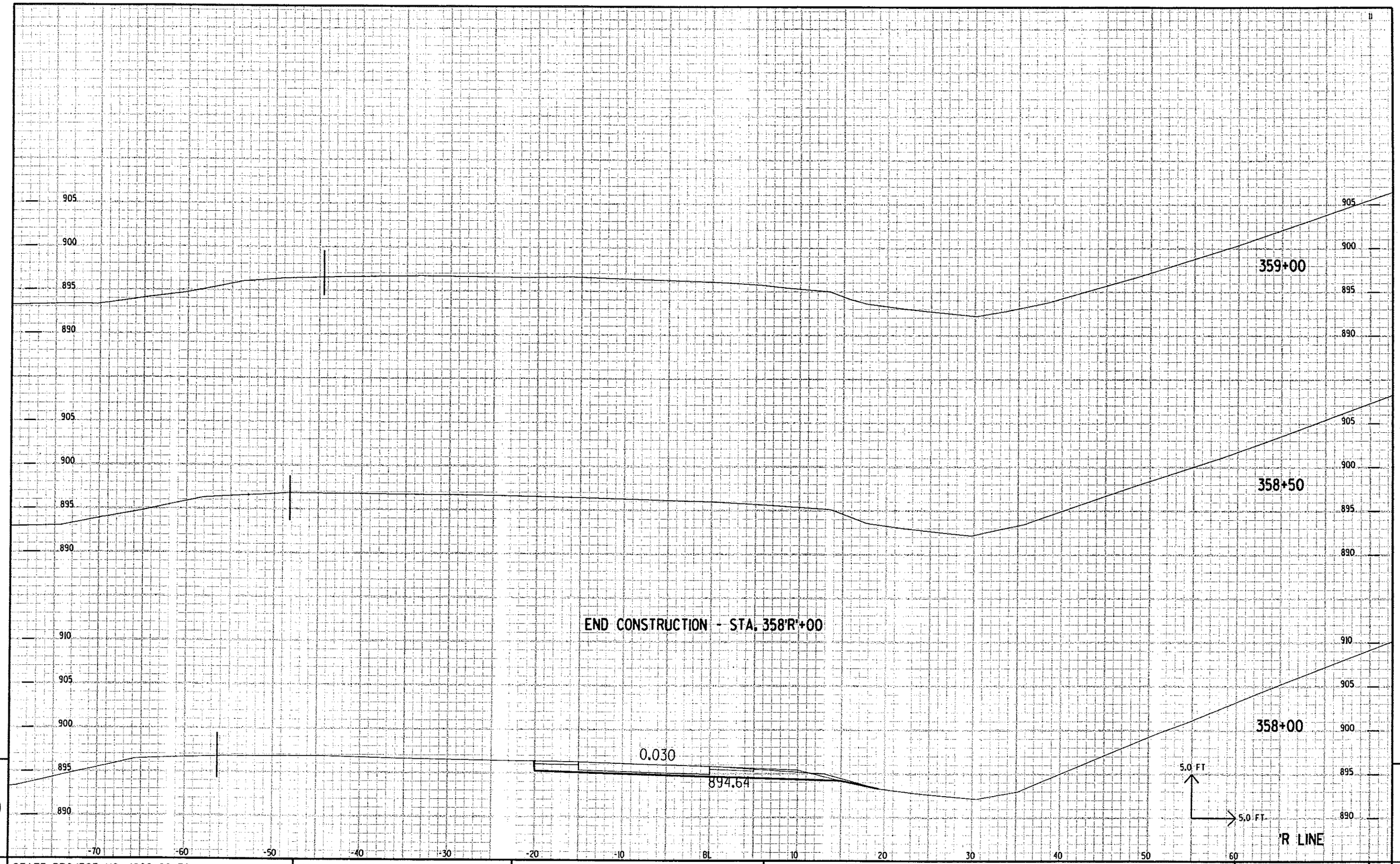

STATE PROJECT NO: 1002-02-72	HWY: IH 39/90	COUNTY: DANE	CROSS SECTIONS: 'R' LINE	SHEET NO: 183	E

FILE NAME : C:\Users\P\De\SMEF16\xs21fin5-5.DGN PLOT DATE : 08-FEB-2006 13:59 PLOT BY : DOTRES PLOT NAME : PLOT SCALE : 2:1

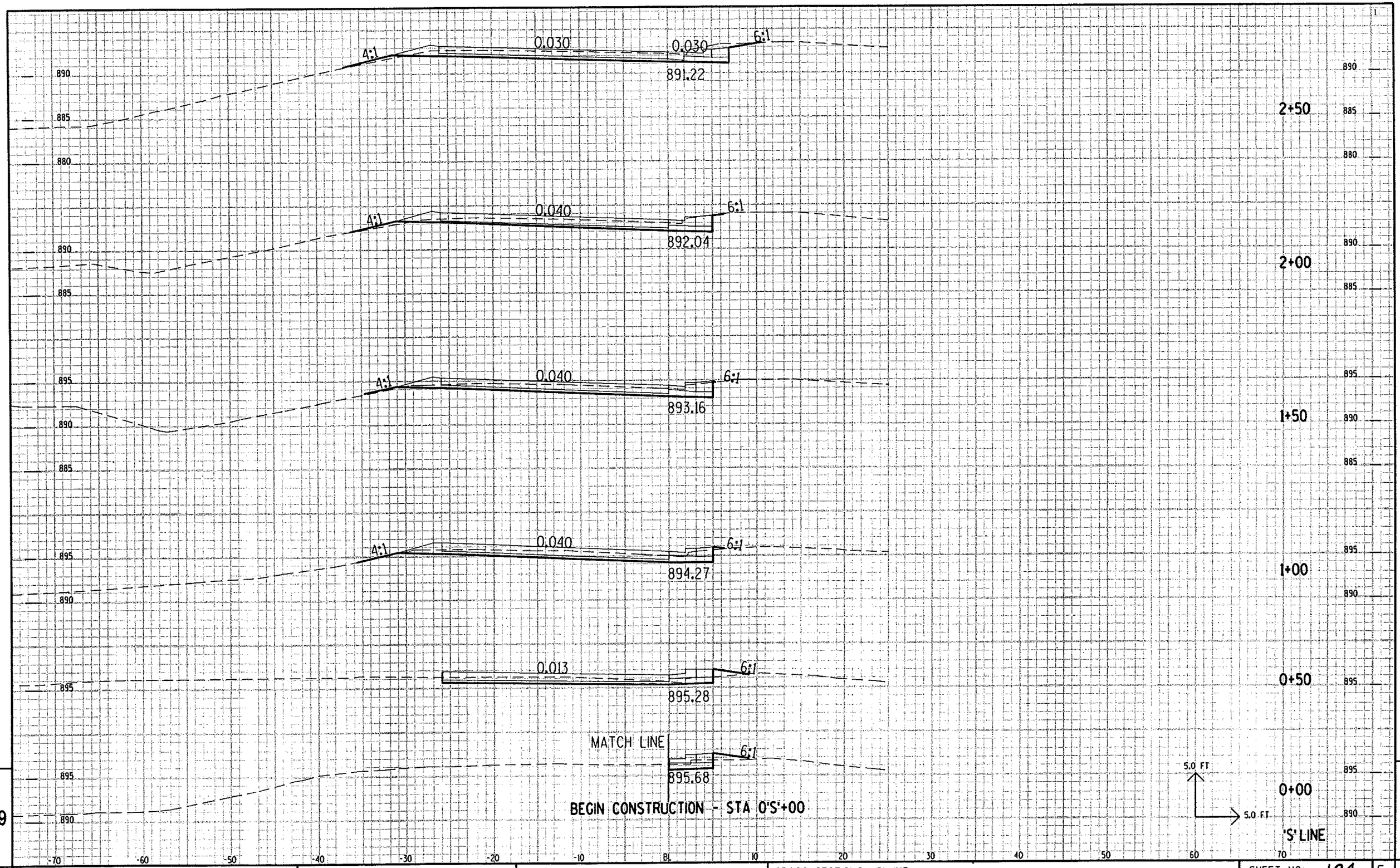

STATE PROJECT NO: 1002-02-72	HWY: IH 39/90	COUNTY: DANE	CROSS SECTIONS: 'S' LINE	SHEET NO: 184	E

FILE NAME : C:\Users\PW\De\SWEF16\xs22fin.DGN PLOT DATE : 23-FEB-2006 08:16 PLOT BY : DOTRES PLOT NAME : PLOT SCALE : 2:1

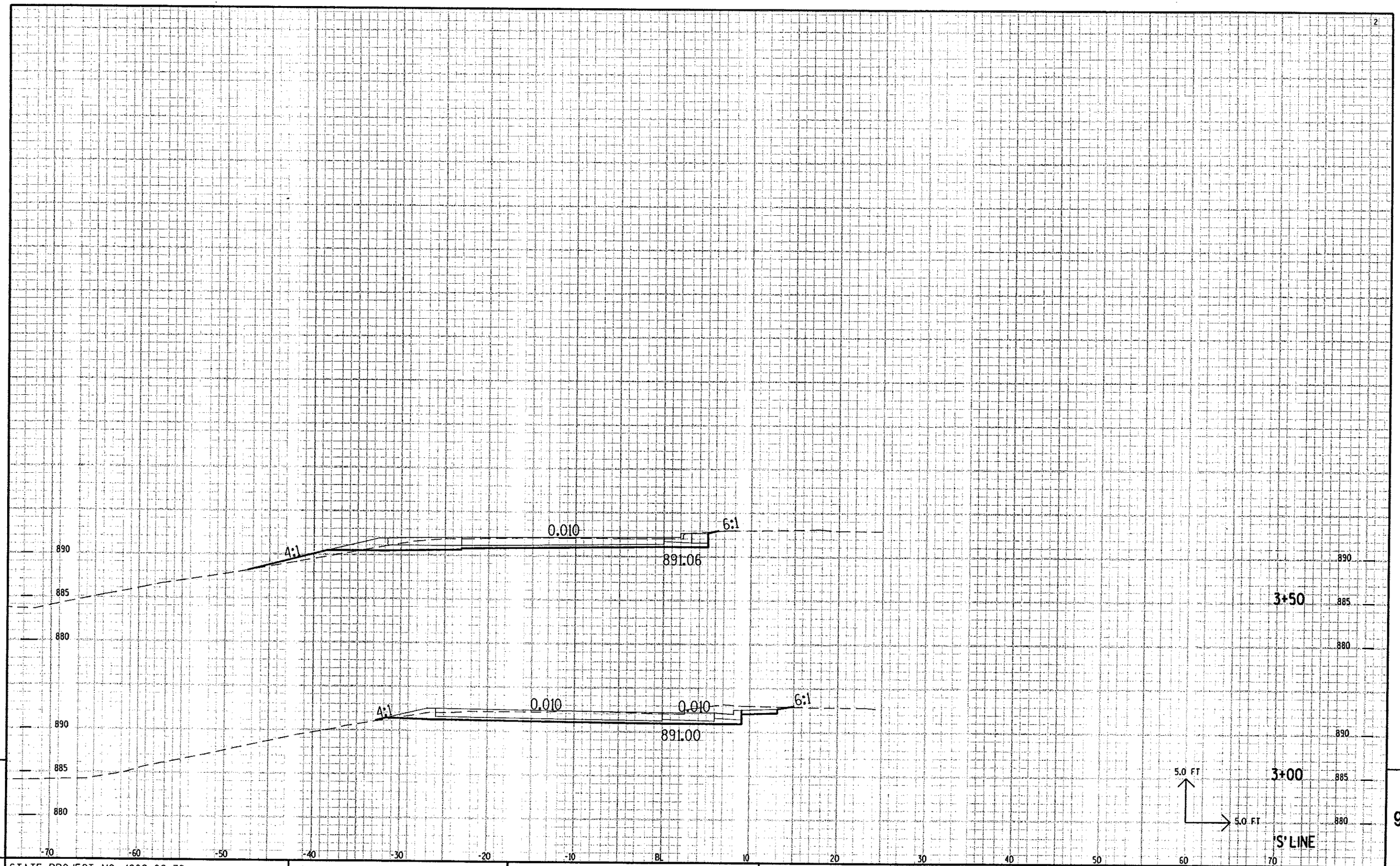

9

9

STATE PROJECT NO: 1002-02-72	HWY: IH 39/90	COUNTY: DANE	CROSS SECTIONS: 'S' LINE	SHEET NO: 185	E

FILE NAME : C:\Users\P\De\SMEF16\xs22fin.DGN PLOT DATE : 23-FEB-2006 08:14 PLOT BY : DOTRES PLOT NAME : PLOT SCALE : 2:1

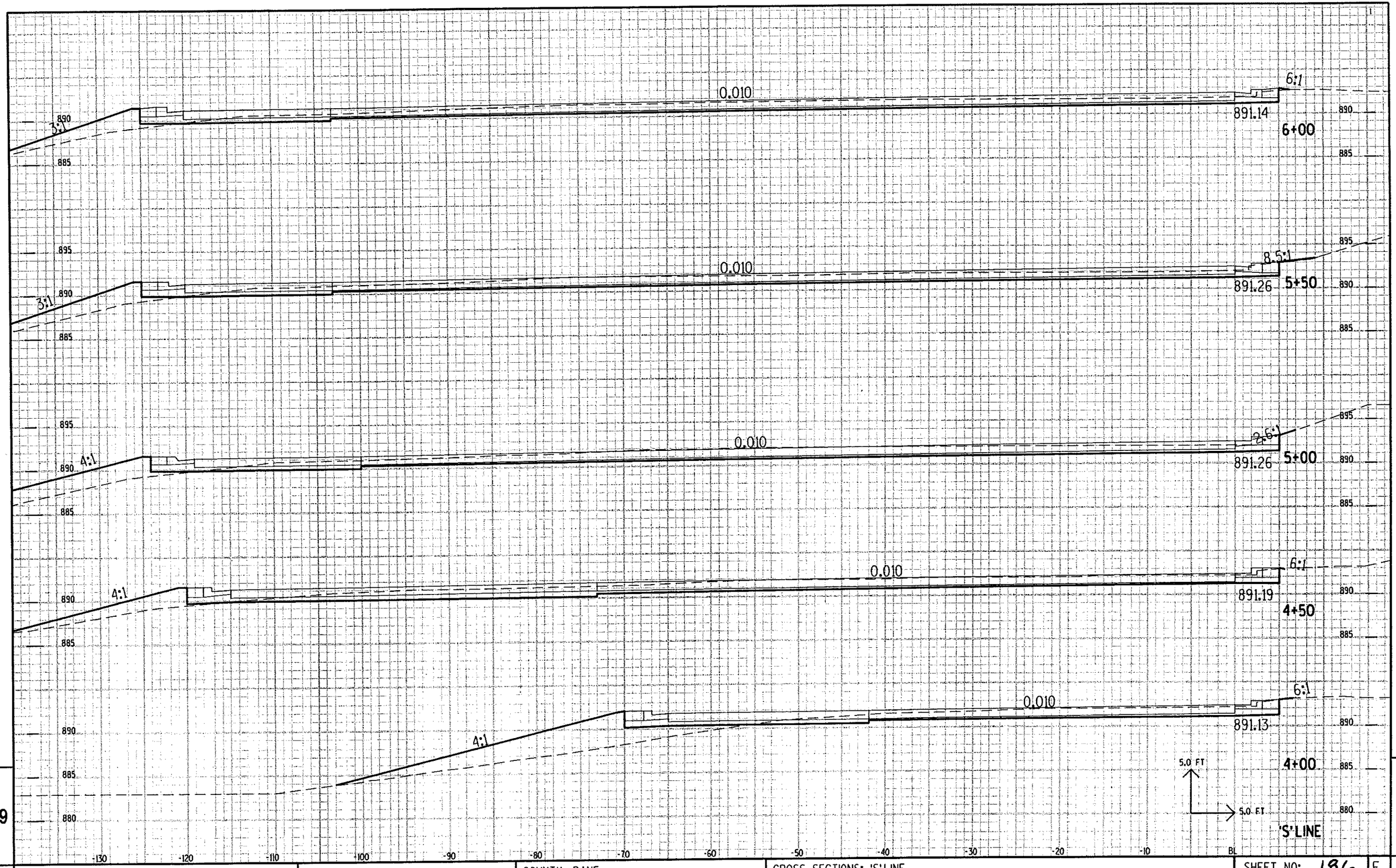

STATE PROJECT NO: 1002-02-72	HWY: IH 39/90	COUNTY: DANE	CROSS SECTIONS: 'S' LINE	SHEET NO: 186	E

FILE NAME : C:\Users\P\De\SMEF16\xs22fin.DGN PLOT DATE : 23-FEB-2006 08:16 PLOT BY : DOTRES PLOT NAME : PLOT SCALE : 2:1

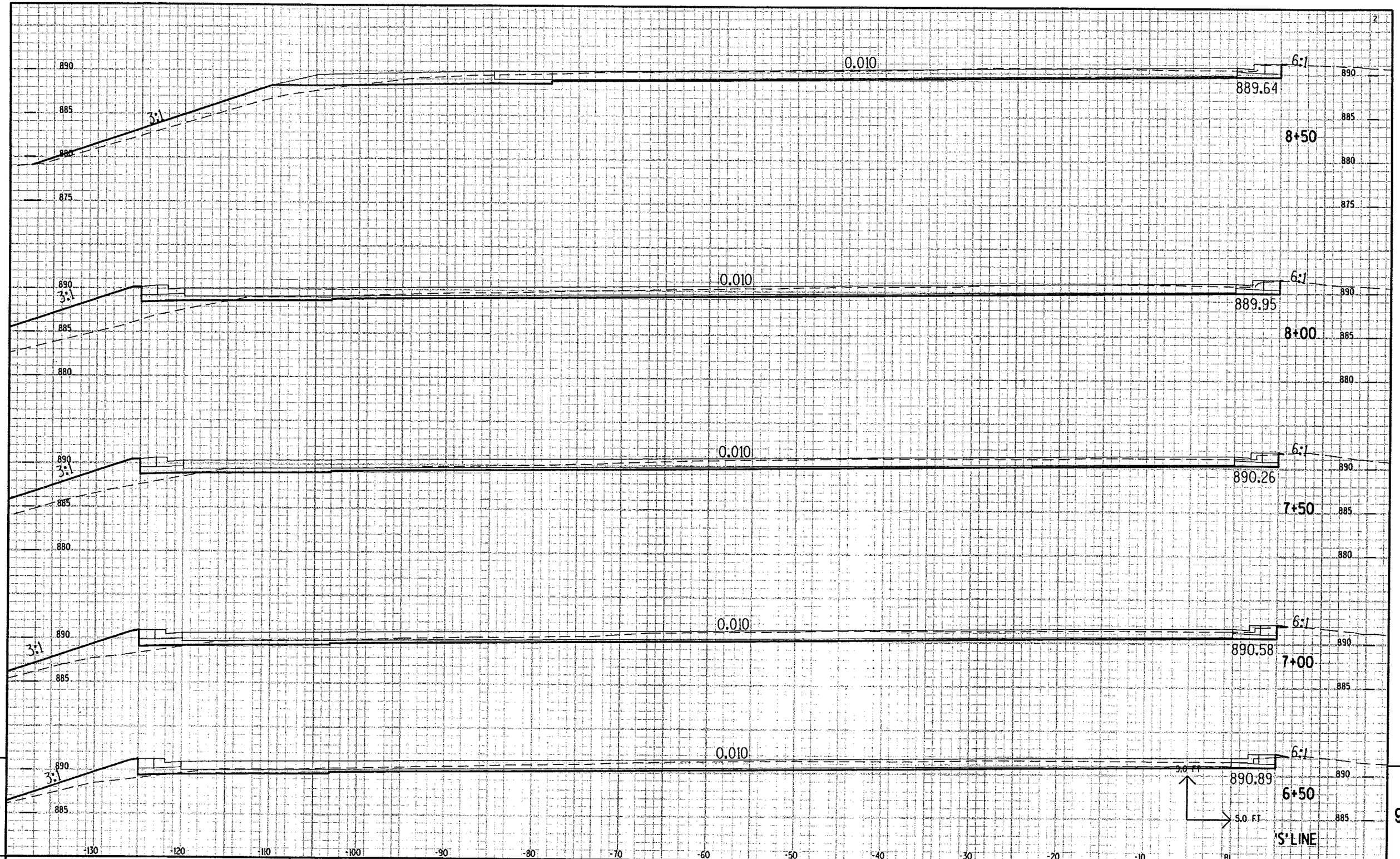

STATE PROJECT NO: 1002-02-72	HWY: IH 39/90	COUNTY: DANE	CROSS SECTIONS: 'S' LINE	SHEET NO: 187	E

FILE NAME : C:\Users\P\De\SMEF16\xs22fin.DGN PLOT DATE : 23-FEB-2006 08:20 PLOT BY : DOTRES PLOT NAME : PLOT SCALE : 2:1

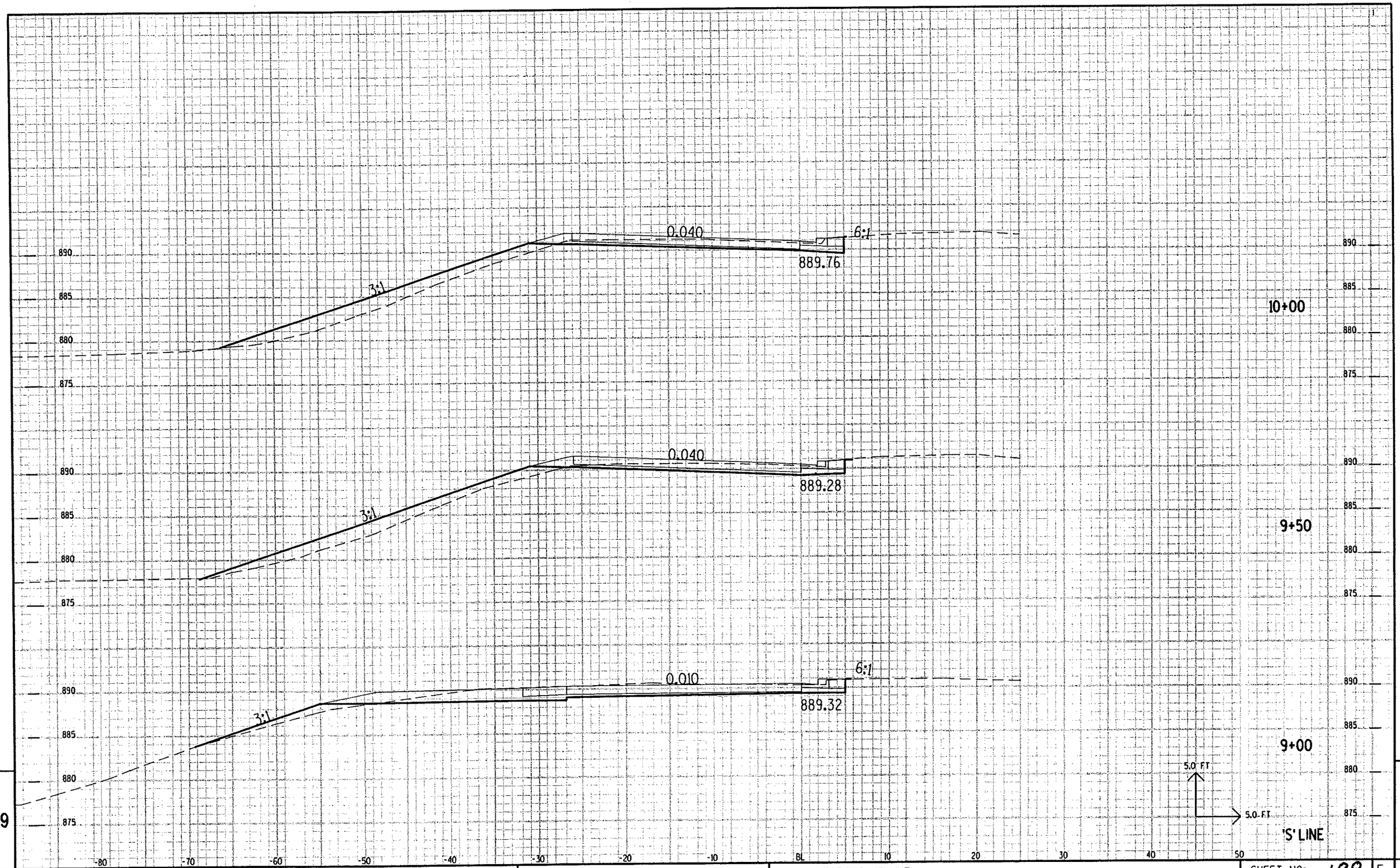

STATE PROJECT NO: 1002-02-72	HWY: IH 39/90	COUNTY: DANE	CROSS SECTIONS: 'S' LINE	SHEET NO: 188	E

FILE NAME : C:\Users\P\De\SKEF16\xs22fin.DGN PLOT DATE : 23-FEB-2006 08:20 PLOT BY : DOTRES PLOT NAME : PLOT SCALE : 2:1

9

9

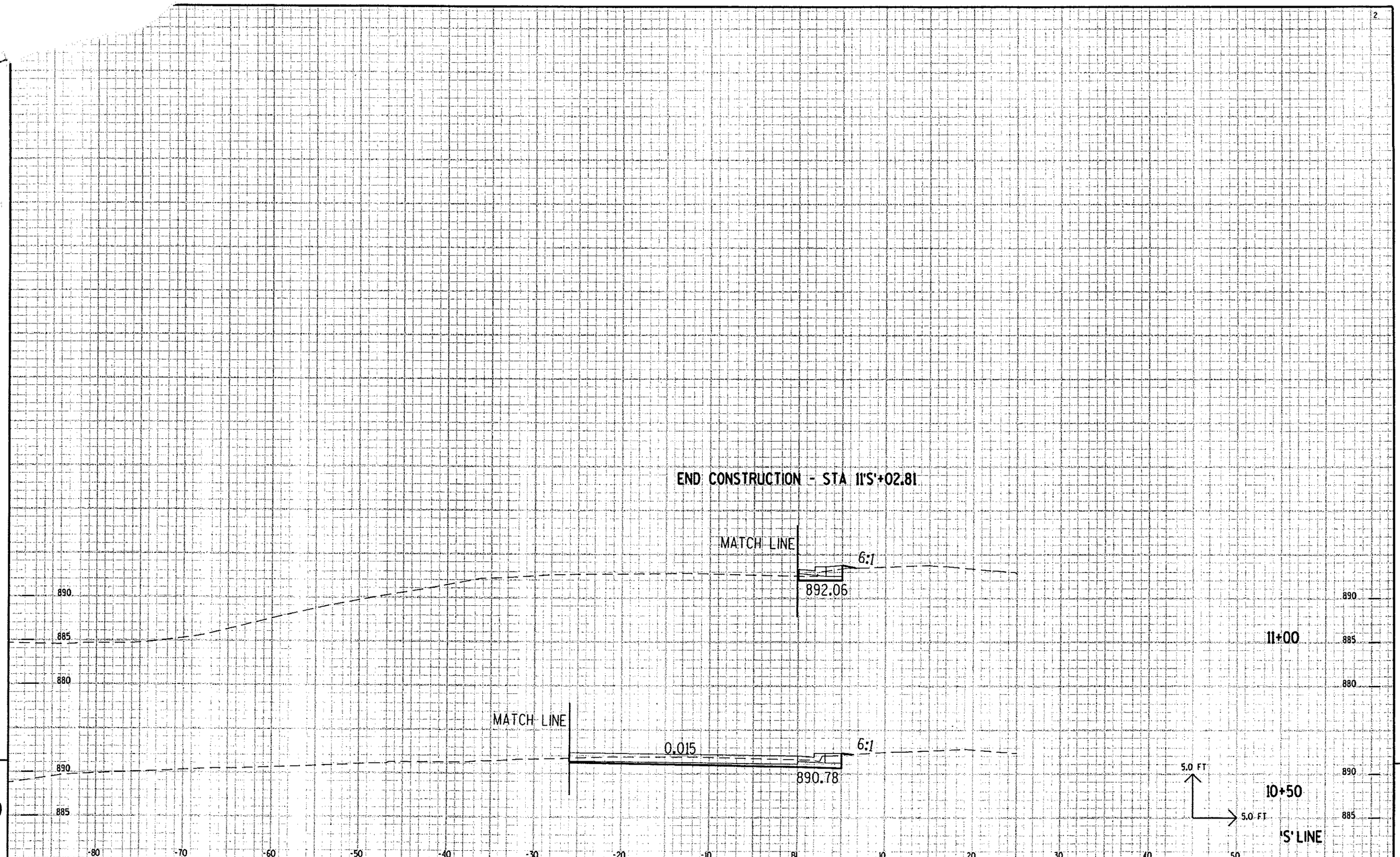

STATE PROJECT NO: 1002-02-72	HWY: IH 39/90	COUNTY: DANE	CROSS SECTIONS: 'S' LINE	SHEET NO: 189	E

FILE NAME : c:\Users\PW\De\SMEF16\xs22fin.DGN PLOT DATE : 28-FEB-2006 14:34 PLOT BY : DOTRES PLOT NAME : PLOT SCALE : 2:1